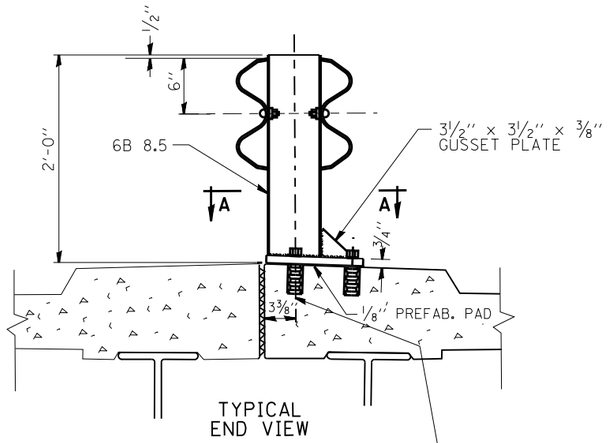

TYPICAL
END VIEW

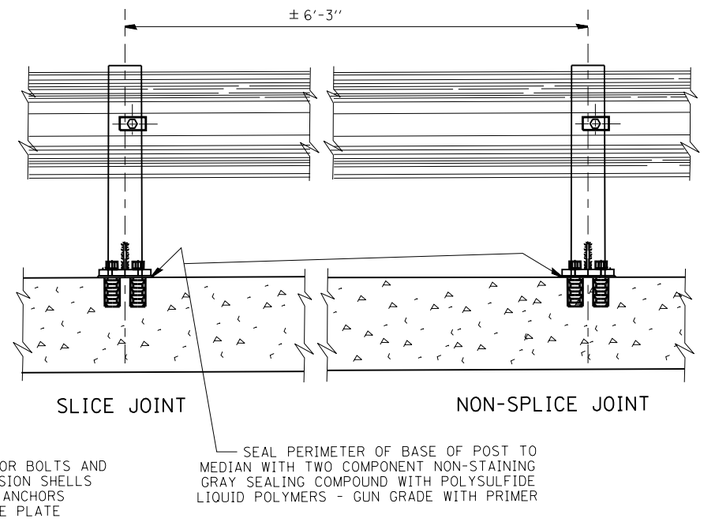

SLICE JOINT

NON-SPLICE JOINT

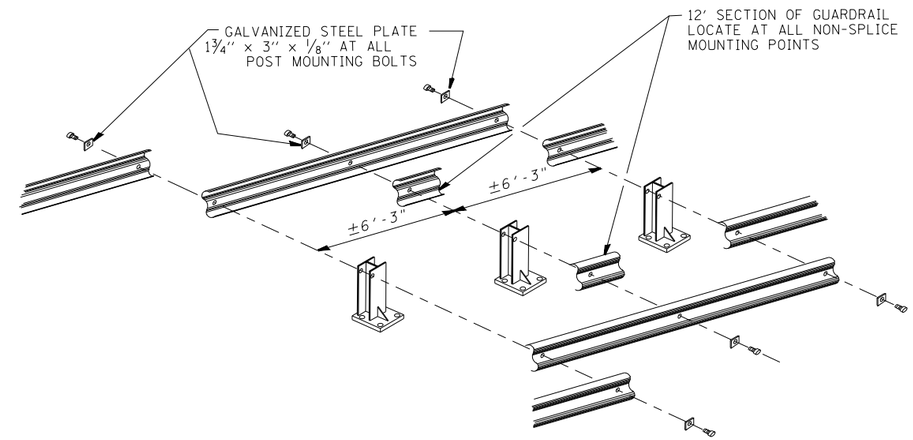

NOTE:
DIAMOND TIPPED DRILL SHALL BE USED TO
DRILL THRU REINFORCEMENT BARS

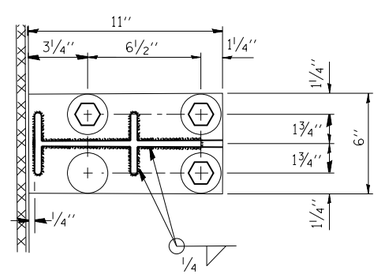

SEC. A-A

NOTE:

POSTS SHALL BE HOT DIPPED GALVANIZED AFTER FABRICATION IN ACCORDANCE WITH ASTM DESIGNATIONS A-123 AND A-385.

TWO PERCENT (2%) OF ALL ANCHOR BOLTS SHALL BE TEST LOADED IN PLACE. MIN. TEST LOAD = 8 KIPS.

ALL BOLTS, NUTS AND WASHERS SHALL BE GALVANIZED IN ACCORDANCE WITH ASTM DESIGNATION A-153.

FOR MATERIAL COMPOSITION OF PREFABRICATED PAD, SEE ARTICLE 54.9(F), (BEARING AND ANCHORAGE), OF THE STANDARD SPECIFICATIONS.

PROVIDE 1-1/8'' AND 2-1/16'' GALVANIZED STEEL SHIMS FOR 25% OF THE POSTS.

IF ONE ANCHOR BOLT FAILS DURING TEST, TWO OTHER ANCHOR BOLTS SHALL BE TESTED. TESTING EQUIPMENT CAN BE OBTAINED FROM BOLT COMPANIES.

THIS SHEET IS FOR INFORMATION ONLY

FILE NAME = c:\pw_work\pwidot\pyrzanowskirb\d0307009\D142312-sht-plan.dgn	USER NAME = pyrzanowskirb	DESIGNED -	REVISED - R. RITCHIE 05-02-00	STATE OF ILLINOIS DEPARTMENT OF TRANSPORTATION	TYPICAL DETAIL FOR CENTER LONGITUDINAL JOINT GUARDRAIL JOINT	F.A. RTE.	SECTION	COUNTY	TOTAL SHEETS / SHEET NO.
	PLOT SCALE = 100.0000 ' / in.	DRAWN - RFL	REVISED -			VAR.	2012-022 GRR	VARIOUS	23 / 13
	PLOT DATE = 8/8/2012	CHECKED -	REVISED -			BM-05		CONTRACT NO. 60T74	
		DATE - 10-31-88	REVISED -		SCALE: SHEET NO. OF SHEETS STA. TO STA.	FED. ROAD DIST. NO.	ILLINOIS	FED. AID PROJECT	