FOR INDEX OF SHEETS, SEE SHEET NO. 2
FOR SUMMARY OF QUANTITIES, SEE SHEET NOS. 3-9

11-08-2024 LETTING ITEM 048

F.A.I. RTE.	SECTION	COUNTY	TOTAL SHEETS	SHEET NO.
72	74-69BR	PIATT	78	1
	ILLINOIS	CONTRACT NO. 70629		

STRUCTURAL DESIGN TRAFFIC YEAR 2017
PV = 94.9% SU = 4.4% MU = 0.7%
ROAD / STREET CLASSIFICATION CLAS III
PERCENT OF STRUCTURAL DESIGN TRAFFIC IN DESIGN LANE
P = 50% S = 50% M = 50%
TRAFFIC FACTOR Actual TF = 0.07 Minimum TF = NO MIN
PG GRADE Top Binder = PG 64-22 Lower Binder = PG 64-22
Surface = PG 64-22
SUBGRADE SUPPORT RATING
SSR= POOR (Sta 47+00.00 to Sta. 53+00.00)

TRAFFIC DATA

LEG A (I-72) ADT 13,4000 (2024) 14,700 (2044)
P.V. 76.3% S.U.% 4.7% M.U.% 19.0%
LEG B (FAS 1532) ADT 925 (2024) 1,000 (2044)
P.V. 96.5% S.U.% 3.0% M.U.% 0.5%
LEG C (FAS 1532 TO I-72 WB RAMP) ADT 175 (2024) 200 (2044)
P.V. 90.9% S.U.% 5.7% M.U.% 3.4%
LEG D (I-72 EB TO FAS 1532 RAMP) ADT 250 (2024) 275 (2044)
P.V. 88.4% S.U.% 8.0% M.U.% 3.6%
LEG E (I-72 WB TO FAS 1532 RAMP) ADT 175 (2024) 200 (2044)
P.V. 98.3% S.U.% 1.1% M.U.% 0.6%
LEG F (FAS 1532 TO I-72 EB RAMP) ADT 225 (2024) 250 (2044)
P.V. 95.6% S.U.% 3.1% M.U.% 1.3%

BRIDGE REPLACEMENT

EXISTING SN 074-0026
PROPOSED SN 074-0088

BRIDGE REPLACEMENT
EXISTING SN 074-0026
PROP. SN 074-0088
2-SPAN AT 270'-0" B-B ABUTS
34'-10" OUT TO OUT WIDTH
23°15'20" SKEW

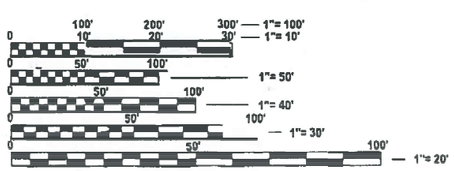

FULL SIZE PLANS HAVE BEEN PREPARED USING STANDARD ENGINEERING SCALES. REDUCED SIZED PLANS WILL NOT CONFORM TO STANDARD SCALES. IN MAKING MEASUREMENTS ON REDUCED PLANS, THE ABOVE SCALES MAY BE USED.

J.U.L.I.E.
JOINT UTILITY LOCATION INFORMATION FOR EXCAVATION
1-800-892-0123
OR 811
TOWNSHIP: SANGAMON

PROJECT ENGINEER - JASON STULTS, P.E.
PROJECT MANAGER - JASON GOBLE
PHONE: (217) 465-4181

CONTRACT NO. 70629

STATE OF ILLINOIS
DEPARTMENT OF TRANSPORTATION

PROPOSED HIGHWAY PLANS

FAI ROUTE 72
SECTION 74-69BR
PROJECT NHPP-RHSB(258)
BRIDGE REPLACEMENT
PIATT COUNTY
AT WHITE HEATH RD (OVERHEAD)
4.3 MI W OF CHAMPAIGN CO LINE

C-95-040-07

PROJECT BEGINS STA 41+90.89

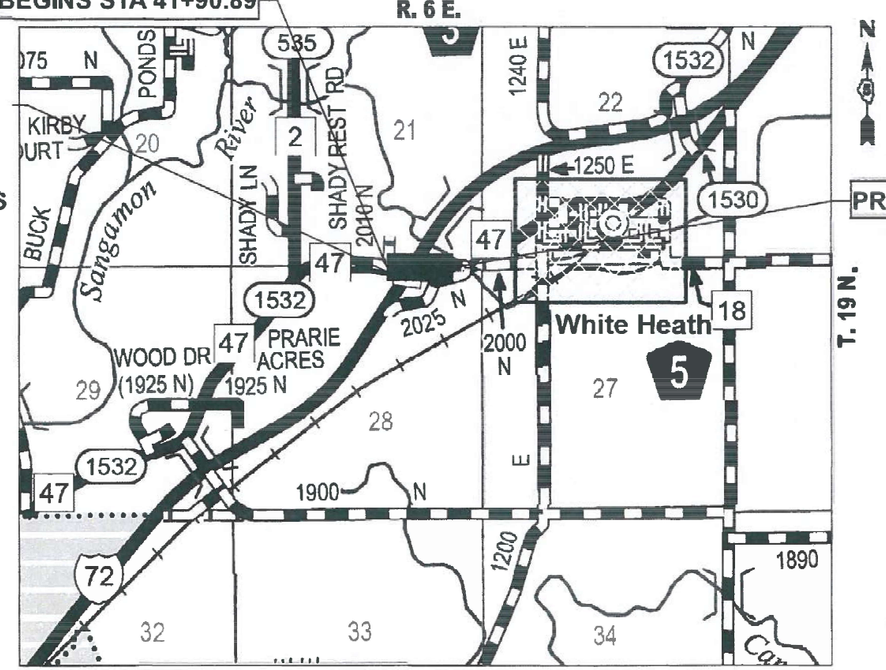

PROJECT END STA 62+87.52

NOT TO SCALE
GROSS LENGTH = 270.00 FT. = 0.051 MILE
NET LENGTH = 270.00 FT. = 0.051 MILE

P-95-040-07

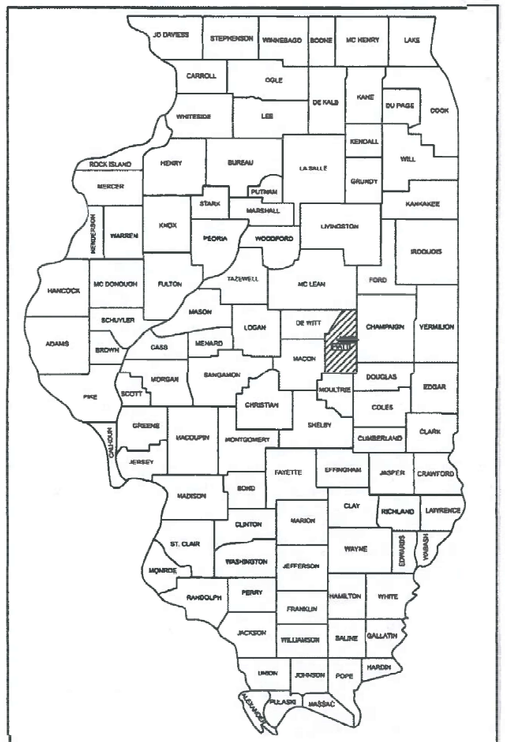

LOCATION OF SECTION INDICATED THUS: -

FUNCTIONAL CLASSIFICATION

FAS 1532 - MAJOR COLLECTOR
FAI 72: INTERSTATE

DESIGN DESIGNATION - 925(24) UNMARKED STATE ROUTE 0.07 (HMA-20)

LICENSED PROFESSIONAL ENGINEER
DREW S. RUHOLL
062-070688
OF ILLINOIS

Drew Ruholl 08/02/2024
DREW S. RUHOLL DATE
LICENSE EXPIRES 11-30-25

BENTON & ASSOCIATES, INC.
CONSULTING ENGINEERS / LAND SURVEYORS
1970 WEST LAFAYETTE AVE.
JACKSONVILLE, IL 62650
PHONE: 217-245-4146 FAX: 217-245-4149
IL DESIGN FIRM REGISTRATION NO. 184-000852

STATE OF ILLINOIS
DEPARTMENT OF TRANSPORTATION

SUBMITTED 8/7 20 24
Kensil A. Garnett SWW
REGIONAL ENGINEER
October 4, 2024
ENGINEER OF DESIGN AND ENVIRONMENT
October 4, 2024
DIRECTOR OF HIGHWAYS PROJECT IMPLEMENTATION

PRINTED BY THE AUTHORITY OF THE STATE OF ILLINOIS

INDEX OF SHEETS

HIGHWAY STANDARDS

000001-08	STANDARD SYMBOLS, ABBREVIATIONS AND PATTERNS
001001-02	AREAS OF REINFORCEMENT BARS
001006	DECIMAL OF AN INCH AND OF A FOOT
280001-07	TEMPORARY EROSION CONTROL SYSTEMS
420001-10	PAVEMENT JOINTS
420401-13	PAVEMENT CONNECTOR (PCC) FOR BRIDGE APPROACH SLAB
420701-03	PAVEMENT WELDED WIRE REINFORCEMENT
482001-02	HMA SHOULDER ADJACENT TO FLEXIBLE PAVEMENT
482006-03	HMA SHOULDER ADJACENT TO RIGID PAVEMENT
515001-04	NAME PLATE FOR BRIDGES
542401-04	METAL FLARED END SECTION FOR PIPE CULVERTS
606401-02	PAVED DITCH
610001-09	SHOULDER INLET WITH CURB
630001-13	STEEL PLATE BEAM GUARDRAIL
630301-09	SHOULDER WIDENING FOR TYPE 1 (SPECIAL) GUARDRAIL TERMINALS
631011-10	TRAFFIC BARRIER TERMINAL, TYPE 2
631031-18	TRAFFIC BARRIER TERMINAL, TYPE 6
701001-02	OFF-RD OPERATIONS, 22, 2W, MORE THAN 15' AWAY
701006-05	OFF-RD OPERATIONS, 2L 2W, 15' TO 24" FROM PAVEMENT EDGE
701011-04	OFF-RD MOVING OPERATIONS, 2L, 2W, DAY ONLY
701201-05	LANE CLOSURE, 2L 2W, DAY ONLY FOR SPEEDS ≥ 45 MPH
701301-04	LANE CLOSURE, 2L 2W, SHORT TIME OPERATIONS
701311-03	LANE CLOSURE, 2L 2W, MOVING OPERATIONS - DAY ONLY
701400-12	APPROACH TO LANE CLOSURE, FREEWAY/EXPRESSWAY
701406-13	LANE CLOSURE, FREEWAY/EXPRESSWAY, DAY OPERATIONS ONLY
701401-13	LANE CLOSURE, FREEWAY/EXPRESSWAY
701451-05	RAMP CLOSURE FREEWAY/EXPRESSWAY
701456-05	PARTIAL EXIT RAMP CLOSURE, FREEWAY/EXPRESSWAY
701901-09	TRAFFIC CONTROL DEVICES
704001-08	TEMPORARY CONCRETE BARRIER
780001-05	TYPICAL PAVEMENT MARKINGS
782006-01	GUARDRAIL AND BARRIER WALL REFLECTOR MOUNTING DETAILS
BLR 22-7	TYPICAL APPLICATION OF TRAFFIC CONTROL DEVICES FOR CONSTRUCTION ON RURAL LOCAL HIGHWAYS

COMMITMENTS

NONE

GENERAL NOTES

G.N.-105.09A
ALL ELEVATIONS SHOWN IN THE PLANS ARE BASED ON NORTH AMERICAN VERTICAL DATUM OF 1988. (NAVD 88)

G.N.-201
TREES THAT INTERFERE WITH THE CONSTRUCTION OPERATIONS SHALL BE REMOVED AS DIRECTED BY THE ENGINEER. ANY TREE DUE TO ITS LOCATION AND DEEMED SUITABLE FOR SAVING BY THE ENGINEER SHALL BE PROTECTED DURING CLEARING AND SUBSEQUENT CONSTRUCTION OPERATIONS.

G.N.-406H
THE FOLLOW MIXTURE REQUIREMENTS ARE APPLICABLE FOR THIS PROJECT:

Location	Old IL 47	Old IL 47	Old IL 47	Old IL 47	Old IL 47
Mixture Use	Polymer Mainline Surface (Top 1-1/4")	Polymer Mainline Binder (Top lift - 2-1/4")	Mainline Binder (Bottom lift)	Shoulder Surface (Top 1.5")	Shoulder Binder (Bottom 6")
AC/PG	SBS PG 70-28	SBS PG 70-28	PG 64-22	PG 64-22	PG 64-22
Design Air Voids	4.0% @ Ndes=50	4.0% @ Ndes=50	4.0% @ Ndes=50	4.0% @ Ndes=30	4.0% @ Ndes=30
Mix Comp(Gradation)	IL 9.5 FG	IL 19.0	IL 19.0	IL 9.5L	IL 19.0L
Friction Aggregate	Mix D	N.A.	N.A.	Mix C	N.A.
Mixture Weight	112	112	112	112	112
Quality Management Program	QC/QA	QC/QA	QC/QA	QC/QA	QC/QA
Sublot Size	3000	3000	3000	3000	3000
Material Transfer Device (Required ?)	NO	NO	NO	NO	NO

G.N.-406S
THE FOLLOWING TABLE IS A LISTING OF POSTED SPEED LIMITS WITHIN THE PROJECT LIMITS. THE ENGINEER SHALL FIELD VERIFY THESE LIMITS:

STA.	TO	STA.	POSTED SPEED LIMIT (MPH)
47+00.00	TO	53+00.00	45 MPH

G.N.-601X
MATERIALS FOR PIPE DRAINS SHALL BE ONLY ITEMS (2), (3) OR (5) FROM ARTICLE 601.02(a).

G.N.-703A
SHORT TERM PAVEMENT MARKING SHALL BE APPLIED TO THE PAVEMENT AFTER ANY OF THE FOLLOWING: COLD MILLING AND/OR PLACING BITUMINOUS MATERIALS (TACK COAT), LEVELING BINDER (MACHINE METHOD), BINDER AND SURFACE COURSES. SHORT TERM PAVEMENT MARKING PLACED ON THE SURFACE SHALL COINCIDE WITH THE FINAL PAVEMENT STRIPING. SHORT TERM PAVEMENT MARKING PLACED PRIOR TO THE SURFACE SHALL COINCIDE WITH THE EXISTING PAVEMENT MARKINGS. USE 4 FEET PER 40 FEET (OR 10% PER STATION).

S.N.-074-0026 HAS BEEN DETERMINED, THROUGH TESTING, NOT TO INVOLVE ASBESTOS IN THE BITUMINOUS BRIDGE DECK WEARING SURFACE OR WATERPROOFING MEMBRANE AS CERTIFIED WITH BBS FORM 2536 DATED AUGUST 14, 2002.

SUMMARY OF QUANTITIES

CONSTR. CODE
RURAL 4-LANE / INTERSTATE / Piatt COUNTY 90% FED / 10% STATE FAI 72

CODE NO.	ITEM	UNIT	TOTAL QUANTITY	BRIDGE 0010 S.N. 074-0088
20100500	TREE REMOVAL, ACRES	ACRE	1.25	1.25
20200100	EARTH EXCAVATION	CU YD	60	60
20400800	FURNISHED EXCAVATION	CU YD	520	520
25000210	SEEDING, CLASS 2A	ACRE	1.5	1.5
25000400	NITROGEN FERTILIZER NUTRIENT	POUND	132	132
25000500	PHOSPHORUS FERTILIZER NUTRIENT	POUND	132	132
25000600	POTASSIUM FERTILIZER NUTRIENT	POUND	132	132
25100630	EROSION CONTROL BLANKET	SQ YD	7120	7120
28000250	TEMPORARY EROSION CONTROL SEEDING	POUND	147	147
28000305	TEMPORARY DITCH CHECKS	FOOT	10	10
28000400	PERIMETER EROSION BARRIER	FOOT	1777	1777
28000500	INLET AND PIPE PROTECTION	EACH	2	2
30300112	AGGREGATE SUBGRADE IMPROVEMENT 12"	SQ YD	709	709
31200100	STABILIZED SUBBASE 4"	SQ YD	132	132

*DENOTES SPECIALTY ITEM

MODEL: SOQ [Sheet]
FILE NAME: P:\22E3703-3 - 70629 White Heath\70629 Section 74-69 BR\CADD Sheets\D570629-sh-SOQ.dgn

BENTON & ASSOCIATES, INC.
CONSULTING ENGINEERS / LAND SURVEYORS
1910 WEST LAFAYETTE AVE.
JACKSONVILLE, IL 62650
PHONE: 217-243-1146 FAX: 217-243-1149
IL DESIGN FIRM REGISTRATION NO. 184-000052

USER NAME = druholl	DESIGNED - DSR	REVISED -	
	DRAWN - DSR	REVISED -	
PLOT SCALE = $SCALE$	CHECKED - WJS	REVISED -	
PLOT DATE = 7/30/2024	DATE - AUGUST 2, 2024	REVISED -	

STATE OF ILLINOIS
DEPARTMENT OF TRANSPORTATION

SUMMARY OF QUANTITIES
WHITE HEATH ROAD (OLD 47)

SCALE: | SHEET 1 OF 7 SHEETS | STA. TO STA.

F.A.I RTE.	SECTION	COUNTY	TOTAL SHEETS	SHEET NO.
72	74-69BR	PIATT	78	3

CONTRACT NO. 70629

ILLINOIS | FED. AID PROJECT

SUMMARY OF QUANTITIES

CONSTR. CODE
RURAL 4-LANE / INTERSTATE / Piatt COUNTY 90% FED / 10% STATE FAI 72

CODE NO.	ITEM	UNIT	TOTAL QUANTITY	BRIDGE 0010 S.N. 074-0088
40600275	BITUMINOUS MATERIALS (PRIME COAT)	POUND	1246	1246
40600290	BITUMINOUS MATERIALS (TACK COAT)	POUND	425	425
40600982	HOT-MIX ASPHALT SURFACE REMOVAL - BUTT JOINT	SQ YD	49	49
40603080	HOT-MIX ASPHALT BINDER COURSE, IL-19.0, N50	TON	22	22
40603230	POLYMERIZED HOT-MIX ASPHALT BINDER COURSE, IL-19.0, N50	TON	10	10
40604110	POLYMERIZED HOT-MIX ASPHALT SURFACE COURSE, IL-9.5FG, MIX "D", N50	TON	18	18
40701831	HOT-MIX ASPHALT PAVEMENT (FULL-DEPTH), 7 1/2"	SQ YD	403	403
42000060	WELDED WIRE REINFORCEMENT	SQ YD	156	156
42000080	PAVEMENT CONNECTOR (PCC) FOR BRIDGE APPROACH SLAB	SQ YD	156	156
44000100	PAVEMENT REMOVAL	SQ YD	595	595
44000156	HOT-MIX ASPHALT SURFACE REMOVAL, 1 3/4"	SQ YD	140	140
44004000	PAVED DITCH REMOVAL	FOOT	122	122
44004250	PAVED SHOULDER REMOVAL	SQ YD	187	187
48101498	AGGREGATE SHOULDERS, TYPE B 4"	SQ YD	201	201

* DENOTES SPECIALTY ITEM

MODEL: SOQ-1 [Sheet]
FILE NAME: P:\22E3703-3 - 70629 White Heath\70629 Section 74-69 BR\CADD Sheets\D570629-sh-SOQ.dgn

BENTON & ASSOCIATES, INC.
CONSULTING ENGINEERS / LAND SURVEYORS
1910 WEST LAFAYETTE AVE.
JACKSONVILLE, IL 62650
PHONE: 217-243-8148 FAX: 217-243-8149
IL DESIGN FIRM REGISTRATION NO. 184000052

USER NAME = druholl	DESIGNED - DSR	REVISED -	
	DRAWN - DSR	REVISED -	
PLOT SCALE = $SCALE$	CHECKED - WJS	REVISED -	
PLOT DATE = 7/30/2024	DATE - AUGUST 2, 2024	REVISED -	

STATE OF ILLINOIS
DEPARTMENT OF TRANSPORTATION

SUMMARY OF QUANTITIES
WHITE HEATH ROAD (OLD 47)

SCALE: | SHEET 2 OF 7 SHEETS | STA. TO STA.

F.A.I RTE.	SECTION	COUNTY	TOTAL SHEETS	SHEET NO.
72	74-69BR	PIATT	78	4

CONTRACT NO. 70629

ILLINOIS | FED. AID PROJECT

SUMMARY OF QUANTITIES

CODE NO.	ITEM	UNIT	TOTAL QUANTITY	CONSTR. CODE RURAL 4-LANE / INTERSTATE / Piatt COUNTY 90% FED / 10% STATE FAI 72 BRIDGE 0010 S.N. 074-0088
48203027	HOT-MIX ASPHALT SHOULDERS, 7 1/2"	SQ YD	238	238
50100100	REMOVAL OF EXISTING STRUCTURES	EACH	1	1
50157300	PROTECTIVE SHIELD	SQ YD	651	651
50200100	STRUCTURE EXCAVATION	CU YD	332	332
50300225	CONCRETE STRUCTURES	CU YD	138.8	138.8
50300255	CONCRETE SUPERSTRUCTURE	CU YD	375	375
50300300	PROTECTIVE COAT	SQ YD	1442	1442
50500105	FURNISHING AND ERECTING STRUCTURAL STEEL	L SUM	1	1
50500505	STUD SHEAR CONNECTORS	EACH	3216	3216
50800205	REINFORCEMENT BARS, EPOXY COATED	POUND	113160	113160
50800530	MECHANICAL SPLICERS	EACH	40	40
51100100	SLOPE WALL 4 INCH	SQ YD	425	425
51200959	FURNISHING METAL SHELL PILES 14" X 0.312"	FOOT	1118	1118
51202305	DRIVING PILES	FOOT	1118	1118

*DENOTES SPECIALTY ITEM

MODEL: SOQ-2 [Sheet]
FILE NAME: P:\22E3703-3 - 70629 White Heath\70629 Section 74-69 BR\CADD Sheets\D570629-sht-SOQ.dgn

BENTON & ASSOCIATES, INC.
CONSULTING ENGINEERS / LAND SURVEYORS
1916 WEST LAFAYETTE AVE.
JACKSONVILLE, IL 62650
PHONE: 217-245-4146 FAX: 217-245-4149
IL DESIGN FIRM REGISTRATION NO. 184-000852

USER NAME = druholl	DESIGNED - DSR	REVISED -	
	DRAWN - DSR	REVISED -	
PLOT SCALE = $SCALE$	CHECKED - WJS	REVISED -	
PLOT DATE = 7/30/2024	DATE - AUGUST 2, 2024	REVISED -	

STATE OF ILLINOIS
DEPARTMENT OF TRANSPORTATION

SUMMARY OF QUANTITIES
WHITE HEATH ROAD (OLD 47)

SCALE: SHEET 3 OF 7 SHEETS STA. TO STA.

F.A.I RTE.	SECTION	COUNTY	TOTAL SHEETS	SHEET NO.
72	74-69BR	PIATT	78	5

CONTRACT NO. 70629
ILLINOIS FED. AID PROJECT

REV. 10/10/24

SUMMARY OF QUANTITIES

CONSTR. CODE
RURAL 4-LANE / INTERSTATE / Piatt COUNTY 90% FED / 10% STATE FAI 72

CODE NO.	ITEM	UNIT	TOTAL QUANTITY	BRIDGE 0010 S.N. 074-0088
51203200	TEST PILE METAL SHELLS	EACH	2	2
51204650	PILE SHOES	EACH	26	26
51500100	NAME PLATES	EACH	1	1
52000110	PREFORMED JOINT STRIP SEAL	FOOT	74	74
52100520	ANCHOR BOLTS, 1"	EACH	24	24
52100530	ANCHOR BOLTS, 1 1/4"	EACH	12	12
54262712	METAL FLARED END SECTIONS 12"	EACH	4	4
58600101	GRANULAR BACKFILL FOR STRUCTURES	CU YD	172	172
59100100	GEOCOMPOSITE WALL DRAIN	SQ YD	85	85
60100945	PIPE DRAINS 12"	FOOT	190	190
60146304	PIPE UNDERDRAINS FOR STRUCTURES 4"	FOOT	154	154
60300305	FRAMES AND LIDS TO BE ADJUSTED	EACH	1	1
60500060	REMOVING INLETS	EACH	1	1
60615910	PAVED DITCH, TYPE A-22	FOOT	60	60

*DENOTES SPECIALTY ITEM

MODEL: SOQ-3 [Sheet]
FILE NAME: P:\22E3703-3 - 70629 White Heath\70629 Section 74-69 BR\CADD Sheets\D570629-sh-SOQ.dgn

BENTON & ASSOCIATES, INC.
CONSULTING ENGINEERS / LAND SURVEYORS
1910 WEST LAFAYETTE AVE.
JACKSONVILLE, IL 62650
PHONE: 217-243-1149 FAX: 217-243-1149
IL DESIGN FIRM REGISTRATION NO. 184000052

USER NAME = druholl	DESIGNED - DSR	REVISED -	
	DRAWN - DSR	REVISED -	
PLOT SCALE = $SCALE$	CHECKED - WJS	REVISED -	
PLOT DATE = 7/30/2024	DATE - AUGUST 2, 2024	REVISED -	

STATE OF ILLINOIS
DEPARTMENT OF TRANSPORTATION

SUMMARY OF QUANTITIES
WHITE HEATH ROAD (OLD 47)

SCALE: | SHEET 4 OF 7 SHEETS | STA. TO STA.

F.A.I RTE.	SECTION	COUNTY	TOTAL SHEETS	SHEET NO.
72	74-69BR	PIATT	78	6

CONTRACT NO. 70629

ILLINOIS | FED. AID PROJECT

SUMMARY OF QUANTITIES

CONSTR. CODE
RURAL 4-LANE / INTERSTATE / Piatt COUNTY 90% FED / 10% STATE FAI 72

	CODE NO.	ITEM	UNIT	TOTAL QUANTITY	BRIDGE 0010 S.N. 074-0088
	61000050	CONCRETE THRUST BLOCKS	EACH	4	4
	61000335	TYPE G INLET BOX, STANDARD 610001	EACH	4	4
*	63000001	STEEL PLATE BEAM GUARDRAIL, TYPE A, 6 FOOT POSTS	FOOT	2800	2800
*	63100045	TRAFFIC BARRIER TERMINAL, TYPE 2	EACH	1	1
*	63100085	TRAFFIC BARRIER TERMINAL, TYPE 6	EACH	4	4
*	63100167	TRAFFIC BARRIER TERMINAL, TYPE 1 (SPECIAL) TANGENT	EACH	3	3
	63200310	GUARDRAIL REMOVAL	FOOT	3186	3186
	64300450	IMPACT ATTENUATORS (NON-REDIRECTIVE), TEST LEVEL 3	EACH	2	2
	64301090	ATTENUATOR BASE	SQ YD	55	55
	66201120	CONCRETE SHOULDER CURB	FOOT	107	107
	67000400	ENGINEER'S FIELD OFFICE, TYPE A	CAL MO	9	9
	67100100	MOBILIZATION	L SUM	1	1
	70107025	CHANGEABLE MESSAGE SIGN	CAL DA	28	28
	70200100	NIGHTTIME WORK ZONE LIGHTING	L SUM	1	1

* DENOTES SPECIALTY ITEM

MODEL: SOQ-4 [Sheet]
FILE NAME: P:\22E3703-3 - 70629 White Heath\70629 Section 74-69 BR\CADD Sheets\D570629-sh-SOQ.dgn

BENTON & ASSOCIATES, INC.
CONSULTING ENGINEERS / LAND SURVEYORS
1910 WEST LAFAYETTE AVE.
JACKSONVILLE, IL 62650
PHONE: 217-243-1146 FAX: 217-243-1149
IL DESIGN FIRM REGISTRATION NO. 184000052

USER NAME = druholl	DESIGNED - DSR	REVISED -	
	DRAWN - DSR	REVISED -	
PLOT SCALE = $SCALE$	CHECKED - WJS	REVISED -	
PLOT DATE = 7/30/2024	DATE - AUGUST 2, 2024	REVISED -	

STATE OF ILLINOIS
DEPARTMENT OF TRANSPORTATION

SUMMARY OF QUANTITIES
WHITE HEATH ROAD (OLD 47)

SCALE: | SHEET 5 OF 7 SHEETS | STA. TO STA.

F.A.I RTE.	SECTION	COUNTY	TOTAL SHEETS	SHEET NO.
72	74-69BR	PIATT	78	7

CONTRACT NO. 70629

ILLINOIS | FED. AID PROJECT

SUMMARY OF QUANTITIES

	CODE NO.	ITEM	UNIT	TOTAL QUANTITY	CONSTR. CODE RURAL 4-LANE / INTERSTATE / Piatt COUNTY 90% FED / 10% STATE FAI 72 BRIDGE 0010 S.N. 074-0088
	70300100	SHORT TERM PAVEMENT MARKING	FOOT	79	79
	70300150	SHORT TERM PAVEMENT MARKING REMOVAL	SQ FT	26	26
	70300221	TEMPORARY PAVEMENT MARKING - LINE 4"- PAINT	FOOT	2400	2400
	70400100	TEMPORARY CONCRETE BARRIER	FOOT	2037.5	2037.5
	70600260	IMPACT ATTENUATORS, TEMPORARY (FULLY REDIRECTIVE, NARROW), TEST LEVEL 3	EACH	4	4
*	78001110	PAINT PAVEMENT MARKING - LINE 4"	FOOT	2400	2400
*	78200005	GUARDRAIL REFLECTORS, TYPE A	EACH	29	29
*	78200010	BARRIER WALL REFLECTORS, TYPE B	EACH	2	2
	78300202	PAVEMENT MARKING REMOVAL - WATER BLASTING	SQ FT	800	800
*	X5030250	BRIDGE DECK GROOVING (LONGITUDINAL)	SQ YD	874	874
	X5030305	CONCRETE WEARING SURFACE, 5"	SQ YD	226	226
	X5040100	PRECAST BRIDGE APPROACH SLAB	SQ FT	1910	1910
	X5080530	BAR TERMINATORS	EACH	492	492
	X6010003	PIPE DRAIN REMOVAL	FOOT	49	49

* DENOTES SPECIALTY ITEM

MODEL: SOQ-5 [Sheet]
FILE NAME: P:\22E3703-3 - 70629 White Heath\70629 Section 74-69 BR\CADD Sheets\D570629-sht-SOQ.dgn

BENTON & ASSOCIATES, INC.
CONSULTING ENGINEERS / LAND SURVEYORS
19/0 WEST LAFAYETTE AVE.
JACKSONVILLE, IL 62650
PHONE: 217-245-4146 FAX: 217-245-4149
IL DESIGN FIRM REGISTRATION NO. 184-000852

USER NAME = druholl	DESIGNED - DSR	REVISED -	
	DRAWN - DSR	REVISED -	
PLOT SCALE = $$SCALE$	CHECKED - WJS	REVISED -	
PLOT DATE = 8/1/2024	DATE - AUGUST 2, 2024	REVISED -	

STATE OF ILLINOIS
DEPARTMENT OF TRANSPORTATION

SUMMARY OF QUANTITIES
WHITE HEATH ROAD (OLD 47)

SCALE: | SHEET 6 OF 7 SHEETS | STA. | TO STA.

F.A.I RTE.	SECTION	COUNTY	TOTAL SHEETS	SHEET NO.
72	74-69BR	PIATT	78	8

CONTRACT NO. 70629

ILLINOIS | FED. AID PROJECT

REV. 8/28/24

SUMMARY OF QUANTITIES

CONSTR. CODE
RURAL 4-LANE / INTERSTATE / Piatt COUNTY 90% FED / 10% STATE FAI 72

	CODE NO.	ITEM	UNIT	TOTAL QUANTITY	BRIDGE 0010 S.N. 074-0088
	X6431110	REMOVE ATTENUATOR BASE	EACH	2	2
	X6650206	WOVEN WIRE FENCE TO BE REMOVED AND RE-ERECTED	FOOT	118	118
	X7010216	TRAFFIC CONTROL AND PROTECTION, (SPECIAL)	L SUM	1	1
	Z0013798	CONSTRUCTION LAYOUT	L SUM	1	1
	Z0029090	DIAMOND GRINDING (BRIDGE SECTION)	SQ YD	1157	1157
*	Z0038700	PERMANENT BENCH MARKS	EACH	1	1
Ø	Z0076600	TRAINEES	HOUR	1,500	1,500
Ø	Z0076604	TRAINEES - TRAINING PROGRAM GRADUATE	HOUR	1,500	1,500

* DENOTES SPECIALTY ITEM

Ø 0042

MODEL: SOQ-6 [Sheet]
FILE NAME: P:\22E3703-3 - 70629 White Heath\70629 Section 74-69 BR\CADD Sheets\D570629-sht-SOQ.dgn

BENTON & ASSOCIATES, INC.
CONSULTING ENGINEERS / LAND SURVEYORS
1915 WEST LAFAYETTE AVE.
JACKSONVILLE, IL 62650
PHONE: 217-245-4146 FAX: 217-245-4149
IL DESIGN FIRM REGISTRATION NO. 184-000852

USER NAME = druholl	DESIGNED - DSR	REVISED -	
	DRAWN - SR	REVISED -	
PLOT SCALE = $SCALE$	CHECKED - WJS	REVISED -	
PLOT DATE = 7/30/2024	DATE - AUGUST 2, 2024	REVISED -	

STATE OF ILLINOIS
DEPARTMENT OF TRANSPORTATION

SUMMARY OF QUANTITIES
WHITE HEATH ROAD (OLD 47)

SCALE: SHEET 7 OF 7 SHEETS STA. TO STA.

F.A.I RTE.	SECTION	COUNTY	TOTAL SHEETS	SHEET NO.
72	74-69BR	PIATT	78	9
		CONTRACT NO. 70629		
	ILLINOIS	FED. AID PROJECT		

REV. 9/30/24 REV. 8/28/24

STRUCTURAL DESIGN TRAFFIC YEAR 2017
PV = 94.9% SU = 4.4% MU = 0.7%
ROAD / STREET CLASSIFICATION CLAS III
PERCENT OF STRUCTURAL DESIGN TRAFFIC IN DESIGN LANE
P = 50% S = 50% M = 50%
TRAFFIC FACTOR Actual TF = 0.07 Minimum TF = NO MIN
PG GRADE Top Binder = PG 64-22 Lower Binder = PG 64-22
Surface = PG 64-22
SUBGRADE SUPPORT RATING
SSR= POOR (Sta 47+00.00 to Sta. 53+00.00)

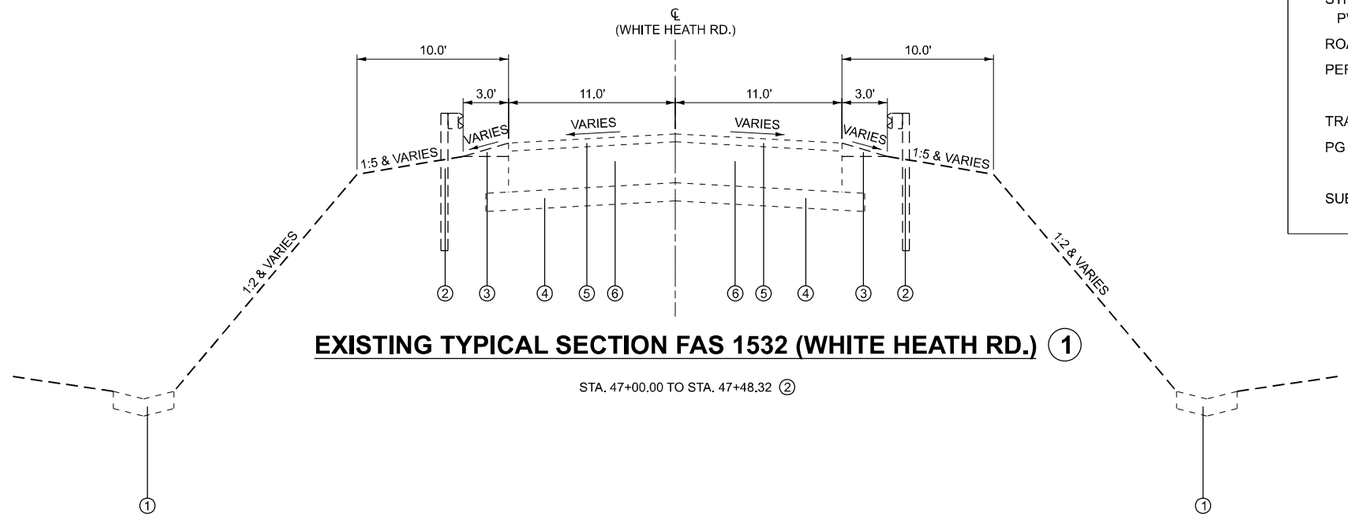

EXISTING TYPICAL SECTION FAS 1532 (WHITE HEATH RD.) 1

STA. 47+00.00 TO STA. 47+48.32 2

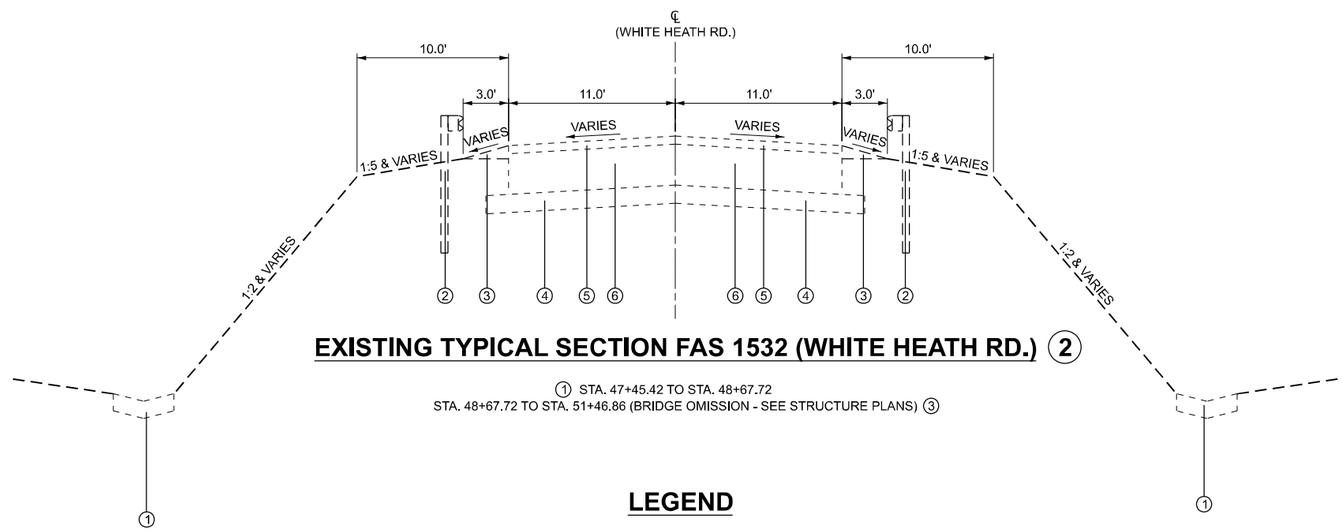

EXISTING TYPICAL SECTION FAS 1532 (WHITE HEATH RD.) 2

1 STA. 47+45.42 TO STA. 48+67.72
STA. 48+67.72 TO STA. 51+46.86 (BRIDGE OMISSION - SEE STRUCTURE PLANS) 3

LEGEND

1. EXISTING PAVED DITCH
2. EXISTING GUARDRAIL
3. EXISTING AGGREGATE WEDGE SHOULDER
4. EXISTING SUB-BASE GRANULAR MATERIAL,4"
5. EXISTING HMA RESURFACING (1¾")
6. EXISTING PORTLAND CEMENT CONCRETE PAVEMENT, 9"
7. EXISTING CONCRETE CURB
8. EXISTING HMA SHOULDERS, 8"

- A PROPOSED EMBANKMENT
- B PROPOSED AGGREGATE SHOULDER, TYPE B 4"
- C PROPOSED STEEL PLATE BEAM GUARDRAIL, TYPE A, 6 FOOT POSTS
- D PROPOSED HOT-MIX ASPHALT SHOULDER 7.5"
- E PROPOSED POLYMERIZED HOT-MIX BINDER COURSE, IL-19.0,N50 (VARIES 2.25-4.5")
- F PROPOSED BITUMINOUS MATERIALS (TACK COAT) (BETWEEN ALL HMA LIFTS NOT SHOWN)
- G PROPOSED POLYMERIZED HOT-MIX ASPHALT SURFACE COURSE, IL-9.5FG,MIX"D",N50 (VARIES 1.0"-3.5")
- H PROPOSED HOT-MIX ASPHALT PAVEMENT (FULL-DEPTH), 7.5"
- I PROPOSED AGGREGATE SUBGRAGE IMPROVEMENT 12"
- J PROPOSED BITUMINOUS MATERIALS (PRIME COAT)
- K PROPOSED CONCRETE CURB (SPECIAL)
- L PROPOSED PAVEMENT REMOVAL
- M PROPOSED PAVED SHOULDER REMOVAL
- N PROPOSED HOT-MIX ASPHALT SURFACE REMOVAL 1.75"
- O PROPOSED EARTH EXCAVATION
- P PROPOSED HOT-MIX BINDER COURSE, IL-19.0,N50 (VARIES 2.25-4.0")

MODEL: TYPICAL [Sheet]
FILE NAME: P:\22E3703-3 - 70629 White Heath\70629 Section 74-69 BR\CADD Sheets\D57\70629-sht-typical.dgn

BENTON & ASSOCIATES, INC.
CONSULTING ENGINEERS / LAND SURVEYORS
1970 WEST LAFAYETTE AVE.
MCCONNELL, IL 62050
PHONE: 217-245-5146 FAX: 217-245-5149
IL DESIGN FIRM REGISTRATION NO. 184-000652

USER NAME = druholl	DESIGNED - DSR	REVISED -	
	DRAWN - DSR	REVISED -	
PLOT SCALE = $SCALE$	CHECKED - WJS	REVISED -	
PLOT DATE = 8/1/2024	DATE - AUGUST 2, 2024	REVISED -	

STATE OF ILLINOIS
DEPARTMENT OF TRANSPORTATION

TYPICAL SECTIONS
WHITE HEATH ROAD (OLD 47)

SCALE: SHEET 1 OF 4 SHEETS STA. TO STA.

F.A.I RTE.	SECTION	COUNTY	TOTAL SHEETS	SHEET NO.
72	74-69BR	PIATT	78	10

CONTRACT NO. 70629
ILLINOIS FED. AID PROJECT

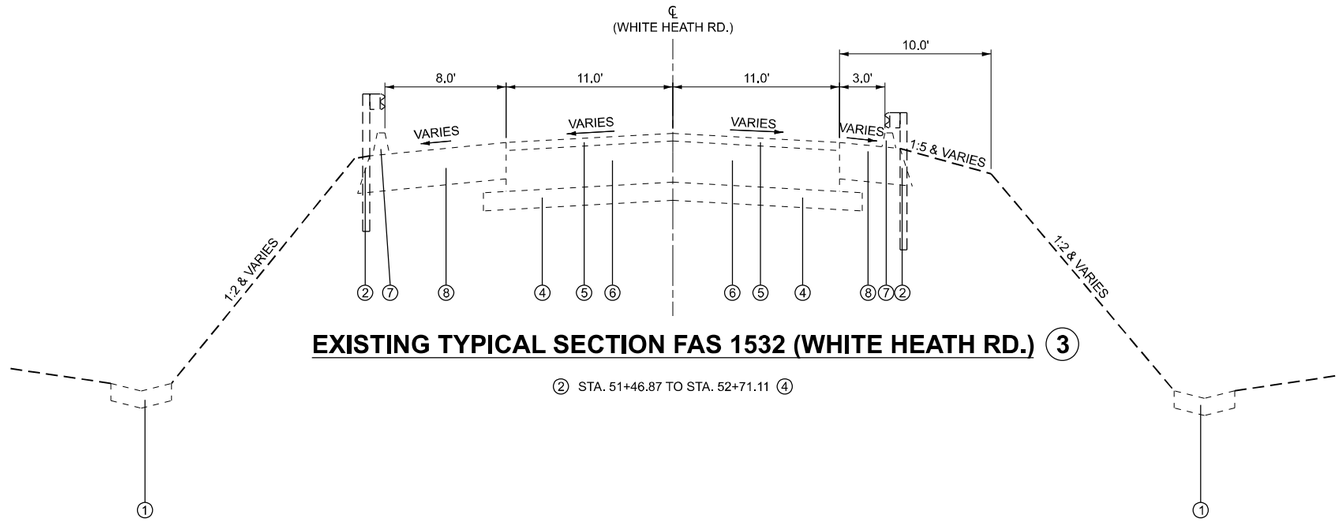

EXISTING TYPICAL SECTION FAS 1532 (WHITE HEATH RD.) 3

2 STA. 51+46.87 TO STA. 52+71.11 4

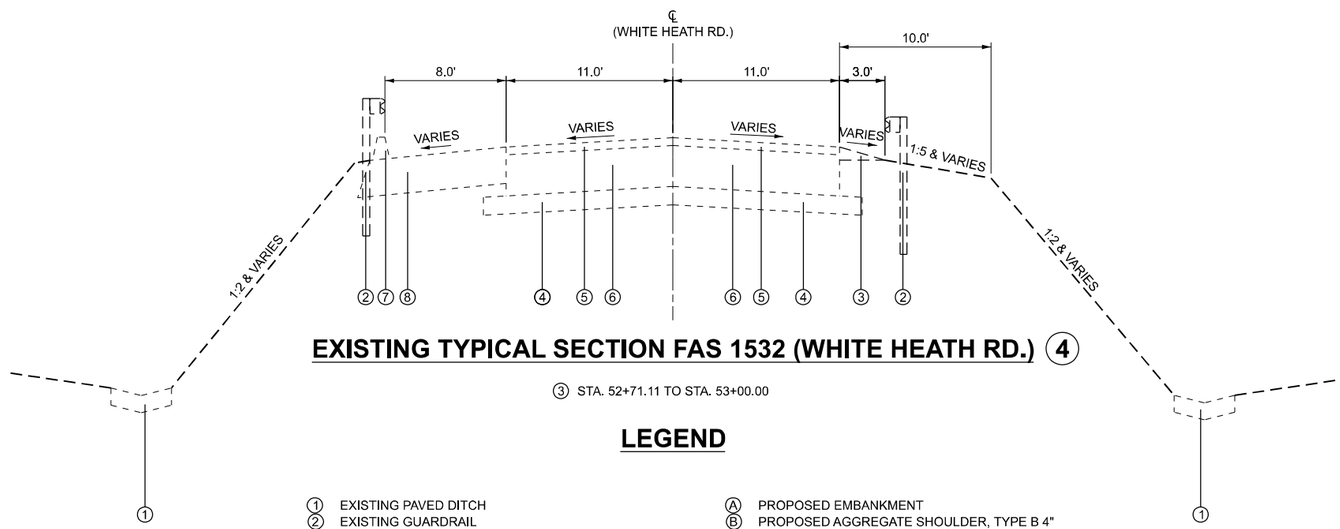

EXISTING TYPICAL SECTION FAS 1532 (WHITE HEATH RD.) 4

3 STA. 52+71.11 TO STA. 53+00.00

LEGEND

1. EXISTING PAVED DITCH
2. EXISTING GUARDRAIL
3. EXISTING AGGREGATE WEDGE SHOULDER
4. EXISTING SUB-BASE GRANULAR MATERIAL,4"
5. EXISTING HMA RESURFACING (1¾")
6. EXISTING PORTLAND CEMENT CONCRETE PAVEMENT, 9"
7. EXISTING CONCRETE CURB
8. EXISTING HMA SHOULDERS, 8"

A. PROPOSED EMBANKMENT
B. PROPOSED AGGREGATE SHOULDER, TYPE B 4"
C. PROPOSED STEEL PLATE BEAM GUARDRAIL, TYPE A, 6 FOOT POSTS
D. PROPOSED HOT-MIX ASPHALT SHOULDER 7.5"
E. PROPOSED POLYMERIZED HOT-MIX BINDER COURSE, IL-19.0,N50 (VARIES 2.25-4.5")
F. PROPOSED BITUMINOUS MATERIALS (TACK COAT) (BETWEEN ALL HMA LIFTS NOT SHOWN)
G. PROPOSED POLYMERIZED HOT-MIX ASPHALT SURFACE COURSE, IL-9.5FG,MIX"D",N50 (VARIES 1.0"-3.5")
H. PROPOSED HOT-MIX ASPHALT PAVEMENT (FULL-DEPTH), 7.5"
I. PROPOSED AGGREGATE SUBGRAGE IMPROVEMENT 12"
J. PROPOSED BITUMINOUS MATERIALS (PRIME COAT)
K. PROPOSED CONCRETE CURB (SPECIAL)
L. PROPOSED PAVEMENT REMOVAL
M. PROPOSED PAVED SHOULDER REMOVAL
N. PROPOSED HOT-MIX ASPHALT SURFACE REMOVAL 1.75"
O. PROPOSED EARTH EXCAVATION
P. PROPOSED HOT-MIX BINDER COURSE, IL-19.0,N50 (VARIES 2.25-4.0")

MODEL: Typical-1 [Sheet]
FILE NAME: P:\22E3703-3 - 70629 White Heath\70629 Section 74-69 BR\CADD Sheets\D570629-sht-typical.dgn

BENTON & ASSOCIATES, INC.
CONSULTING ENGINEERS / LAND SURVEYORS
1970 WEST LAFAYETTE AVE.
JACKSONVILLE, IL 62650
PHONE: 217-245-5146 FAX: 217-245-5149
IL DESIGN FIRM REGISTRATION NO. 184-000052

USER NAME = druholl	DESIGNED - DSR	REVISED -	
	DRAWN - DSR	REVISED -	
PLOT SCALE = $SCALE$	CHECKED - WJS	REVISED -	
PLOT DATE = 8/1/2024	DATE - AUGUST 2, 2024	REVISED -	

STATE OF ILLINOIS
DEPARTMENT OF TRANSPORTATION

TYPICAL SECTIONS
WHITE HEATH ROAD (OLD 47)

SCALE: SHEET 2 OF 4 SHEETS STA. TO STA.

F.A.I RTE.	SECTION	COUNTY	TOTAL SHEETS	SHEET NO.
72	74-69BR	PIATT	78	11
		CONTRACT NO. 70629		
		ILLINOIS	FED. AID PROJECT	

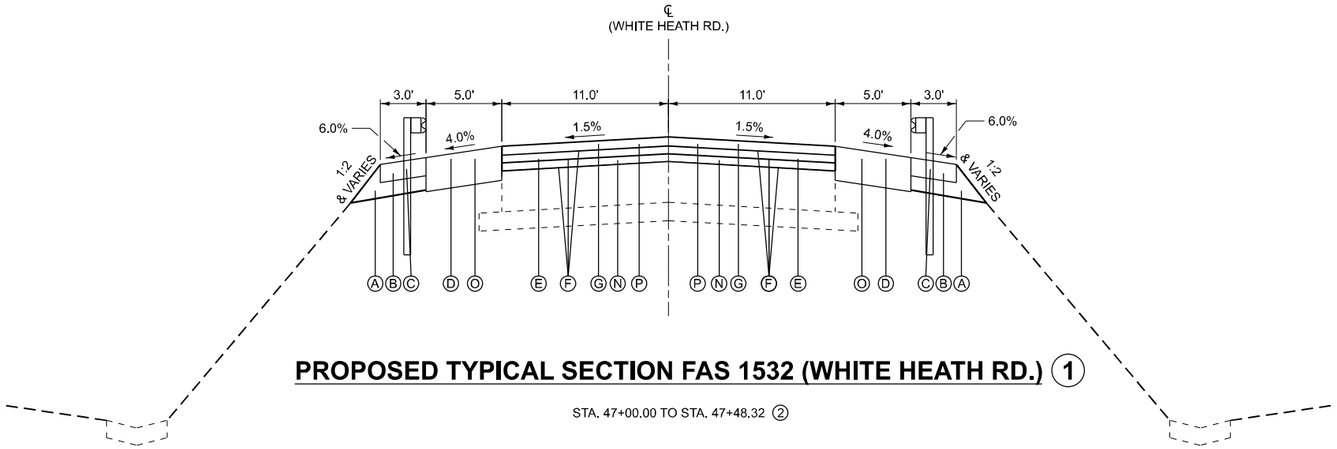

PROPOSED TYPICAL SECTION FAS 1532 (WHITE HEATH RD.) 1

STA. 47+00.00 TO STA. 47+48.32 2

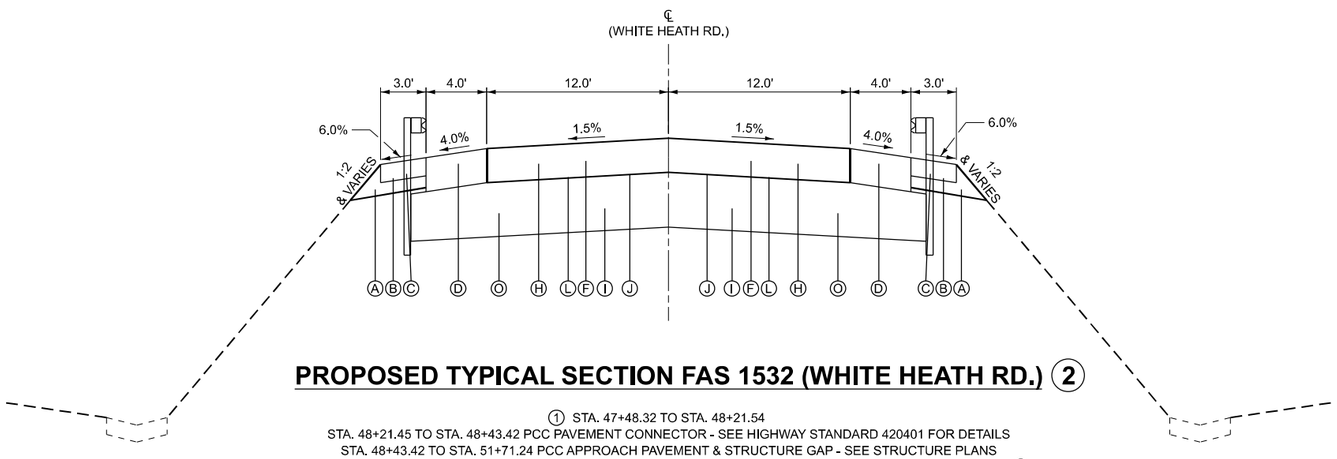

PROPOSED TYPICAL SECTION FAS 1532 (WHITE HEATH RD.) 2

1 STA. 47+48.32 TO STA. 48+21.54
STA. 48+21.45 TO STA. 48+43.42 PCC PAVEMENT CONNECTOR - SEE HIGHWAY STANDARD 420401 FOR DETAILS
STA. 48+43.42 TO STA. 51+71.24 PCC APPROACH PAVEMENT & STRUCTURE GAP - SEE STRUCTURE PLANS
STA. 51+73.24 TO STA. 51+93.12 PCC PAVEMENT CONNECTOR - SEE HIGHWAY STANDARD 420401 FOR DETAILS 3

LEGEND

1. EXISTING PAVED DITCH
2. EXISTING GUARDRAIL
3. EXISTING AGGREGATE WEDGE SHOULDER
4. EXISTING SUB-BASE GRANULAR MATERIAL,4"
5. EXISTING HMA RESURFACING (1¾")
6. EXISTING PORTLAND CEMENT CONCRETE PAVEMENT, 9"
7. EXISTING CONCRETE CURB
8. EXISTING HMA SHOULDERS, 8"

- A PROPOSED EMBANKMENT
- B PROPOSED AGGREGATE SHOULDER, TYPE B 4"
- C PROPOSED STEEL PLATE BEAM GUARDRAIL, TYPE A, 6 FOOT POSTS
- D PROPOSED HOT-MIX ASPHALT SHOULDER 7.5"
- E PROPOSED POLYMERIZED HOT-MIX BINDER COURSE, IL-19.0,N50 (VARIES 2.25-4.5")
- F PROPOSED BITUMINOUS MATERIALS (TACK COAT) (BETWEEN ALL HMA LIFTS NOT SHOWN)
- G PROPOSED POLYMERIZED HOT-MIX ASPHALT SURFACE COURSE, IL-9.5FG,MIX"D",N50 (VARIES 1.0"-3.5")
- H PROPOSED HOT-MIX ASPHALT PAVEMENT (FULL-DEPTH), 7.5"
- I PROPOSED AGGREGATE SUBGRAGE IMPROVEMENT 12"
- J PROPOSED BITUMINOUS MATERIALS (PRIME COAT)
- K PROPOSED CONCRETE CURB (SPECIAL)
- L PROPOSED PAVEMENT REMOVAL
- M PROPOSED PAVED SHOULDER REMOVAL
- N PROPOSED HOT-MIX ASPHALT SURFACE REMOVAL 1.75"
- O PROPOSED EARTH EXCAVATION
- P PROPOSED HOT-MIX BINDER COURSE, IL-19.0,N50 (VARIES 2.25-4.0")

MODEL: Typical-2 [Sheet]
FILE NAME: P:\22E3703-3 - 70629 White Heath\70629 Section 74-69 BR\CADD Sheets\D570629-sht-typical.dgn

BENTON & ASSOCIATES, INC.,
CONSULTING ENGINEERS / LAND SURVEYORS
1970 WEST LAFAYETTE AVE.
MONTICELLO, IL 61856
PHONE: 217-215-4148 FAX: 217-215-1419
IL DESIGN FIRM REGISTRATION NO. 184-000052

USER NAME = druholl	DESIGNED - DSR	REVISED -	
	DRAWN - DSR	REVISED -	
PLOT SCALE = $SCALE$	CHECKED - WJS	REVISED -	
PLOT DATE = 8/1/2024	DATE - AUGUST 2, 2024	REVISED -	

STATE OF ILLINOIS
DEPARTMENT OF TRANSPORTATION

TYPICAL SECTIONS
WHITE HEATH ROAD (OLD 47)

SCALE: | SHEET 3 OF 4 SHEETS | STA. TO STA.

F.A.I RTE.	SECTION	COUNTY	TOTAL SHEETS	SHEET NO.
72	74-69BR	PIATT	78	12

CONTRACT NO. 70629

ILLINOIS | FED. AID PROJECT

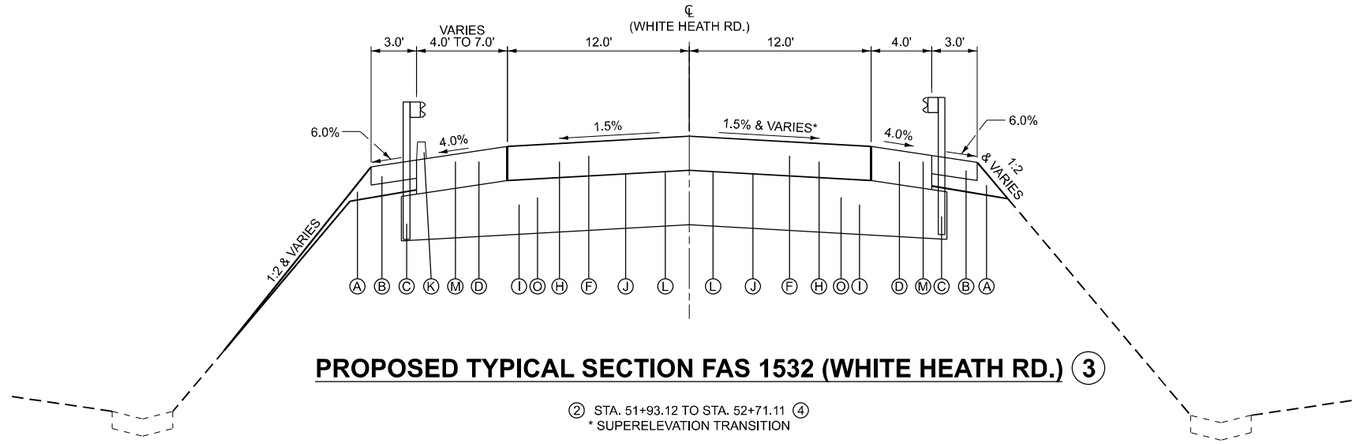

PROPOSED TYPICAL SECTION FAS 1532 (WHITE HEATH RD.) 3

2 STA. 51+93.12 TO STA. 52+71.11 4
* SUPERELEVATION TRANSITION

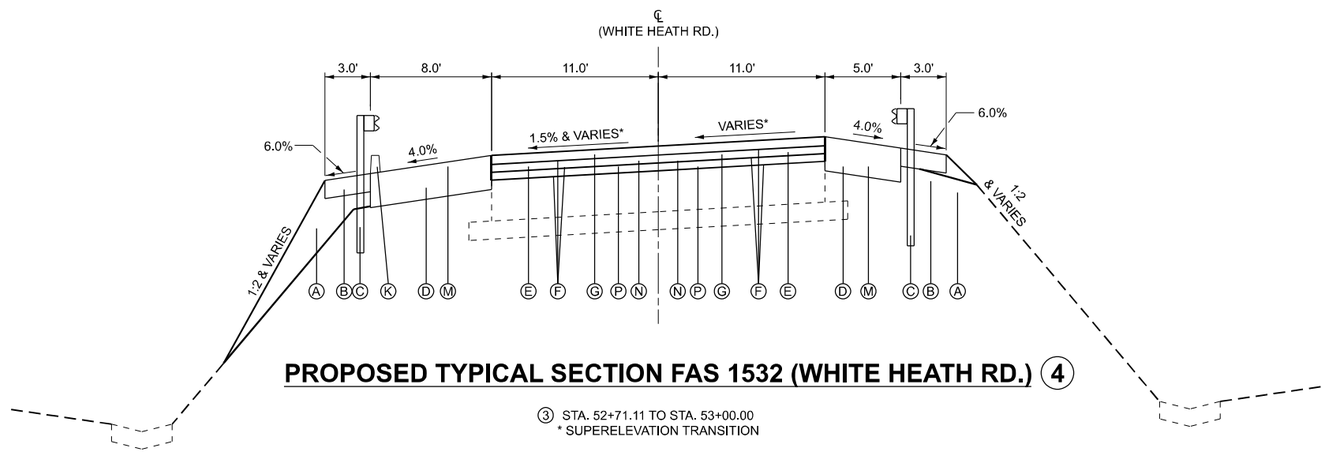

PROPOSED TYPICAL SECTION FAS 1532 (WHITE HEATH RD.) 4

3 STA. 52+71.11 TO STA. 53+00.00
* SUPERELEVATION TRANSITION

LEGEND

1. EXISTING PAVED DITCH
2. EXISTING GUARDRAIL
3. EXISTING AGGREGATE WEDGE SHOULDER
4. EXISTING SUB-BASE GRANULAR MATERIAL,4"
5. EXISTING HMA RESURFACING (1¾")
6. EXISTING PORTLAND CEMENT CONCRETE PAVEMENT, 9"
7. EXISTING CONCRETE CURB
8. EXISTING HMA SHOULDERS, 8"

- A PROPOSED EMBANKMENT
- B PROPOSED AGGREGATE SHOULDER, TYPE B 4"
- C PROPOSED STEEL PLATE BEAM GUARDRAIL, TYPE A, 6 FOOT POSTS
- D PROPOSED HOT-MIX ASPHALT SHOULDER 7.5"
- E PROPOSED POLYMERIZED HOT-MIX BINDER COURSE, IL-19.0,N50 (VARIES 2.25-4.5")
- F PROPOSED BITUMINOUS MATERIALS (TACK COAT) (BETWEEN ALL HMA LIFTS NOT SHOWN)
- G PROPOSED POLYMERIZED HOT-MIX ASPHALT SURFACE COURSE, IL-9.5FG,MIX"D",N50 (VARIES 1.0"-3.5")
- H PROPOSED HOT-MIX ASPHALT PAVEMENT (FULL-DEPTH), 7.5"
- I PROPOSED AGGREGATE SUBGRAGE IMPROVEMENT 12"
- J PROPOSED BITUMINOUS MATERIALS (PRIME COAT)
- K PROPOSED CONCRETE CURB (SPECIAL)
- L PROPOSED PAVEMENT REMOVAL
- M PROPOSED PAVED SHOULDER REMOVAL
- N PROPOSED HOT-MIX ASPHALT SURFACE REMOVAL 1.75"
- O PROPOSED EARTH EXCAVATION
- P PROPOSED HOT-MIX BINDER COURSE, IL-19.0,N50 (VARIES 2.25-4.0")

MODEL: TYPICAL-3 [Sheet]
FILE NAME: P:\22E3703-3 - 70629 White Heath\70629 Section 74-69 BR\CADD Sheets\D570629-sht-typical.dgn

BENTON & ASSOCIATES, INC.
CONSULTING ENGINEERS / LAND SURVEYORS
1970 WEST LAFAYETTE AVE.
MCHENRY, ILL. 62050
PHONE: 217-245-6146 FAX: 217-245-1619
IL DESIGN FIRM REGISTRATION NO. 184-000852

USER NAME = gsturgeon	DESIGNED - DSR	REVISED -	
	DRAWN - DSR	REVISED -	
PLOT SCALE = $SCALE$	CHECKED - WJS	REVISED -	
PLOT DATE = 8/1/2024	DATE - AUGUST 2, 2024	REVISED -	

STATE OF ILLINOIS
DEPARTMENT OF TRANSPORTATION

TYPICAL SECTIONS
WHITE HEATH ROAD (OLD 47)

SCALE: | SHEET 4 OF 4 SHEETS | STA. TO STA.

F.A.I RTE.	SECTION	COUNTY	TOTAL SHEETS	SHEET NO.
72	74-69BR	PIATT	78	13

CONTRACT NO. 70629

ILLINOIS | FED. AID PROJECT

SCHEDULE OF QUANTITIES

REMOVAL SCHEDULE

LOCATION				LENGTH	20100500 TREE REMOVAL, ACRES	40600982 HOT-MIX ASPHALT SURFACE REMOVAL - BUTT JOINT	44000100 PAVEMENT REMOVAL	44000156 HOT-MIX ASPHALT SURFACE REMOVAL, 1.75"	44004000 PAVED DITCH REMOVAL (SEE NOTE 2)	44004250 PAVED SHOULDER REMOVAL	60500060 REMOVING INLETS	X6010003 PIPE DRAIN REMOVAL	X6650206 WOVEN WIRE FENCE TO BE REMOVED AND RE-ERECTED
STA.	TO	ST.	LT/RT	FOOT	(ACRE)	(SQ YD)	(FOOT)	(SQ YD)	(FOOT)	(SQ YD)	(EACH)	(FOOT)	(FOOT)
43+85.00	TO	49+18.33	LT	533.33	0.33								56
45+00.00	TO	48+75.00	RT	375.00	0.38								
51+50.00	TO	54+35.41	RT	285.41	0.44								
51+62.17	TO	53+50.00	LT	187.83	0.18								62
45+00.00	TO	48+75.00	RT	375.00					40				
51+62.17	TO	53+50.00	LT	187.83					20		1	48.5	
52+16.43	TO	52+22.43	RT	6.00					61.5				
47+00.00	TO	47+10.00		10.00		24.4							
47+10.00	TO	47+48.32		38.32				93.7					
47+48.32	TO	48+67.48		119.16			291.3						
48+67.48	TO	51+46.87		279.39	EXISTING STRUCTURE								
51+46.87	TO	52+71.11		124.24			303.7						
52+71.11	TO	52+90.00		18.89				46.2		187.2			
52+90.00	TO	53+00.00		10.00		24.4							
SUBTOTAL					1.33	48.8	595.0	139.9	121.5	187.2	1.0	48.5	118.0
TOTAL					1.25	49	595	140	122	187	1	49	118

NOTE 1: ASSUMED 10% PAVED DITCH REMOVAL AND REPLACEMENT FOR PROPOSED TREE REMOVAL IMPACTS

PAVING SCHEDULE

LOCATION			LENGTH	30300112 AGGREGATE SUBGRADE IMPROVEMENT 12"	40600275 BITUMINOUS MATERIAL (PRIME COAT)	40600290 BITUMINOUS MATERIAL (TACK COAT)	40603080 HOT-MIX ASPHALT BINDER COURSE, IL-19.0, N50	40603230 POLYMERIZED HOT-MIX ASPHALT BINDER COURSE, IL-19.0, N50	40604110 POLYMERIZED HOT-MIX ASPHALT SURFACE COURSE, IL-9.5FG, MIX "D", N50	40701831 HOT-MIX ASPHALT PAVEMENT (FULL-DEPTH), 7.5"	48203027 HOT-MIX ASPHALT SHOULDERS, 7.5"	66201120 CONCRETE SHOULDER CURB
STA.	TO	STA.	FOOT	(SQ YD)	(POUND)	(POUND)	(TON)	(TON)	(TON)	(SQ YD)	(SQ YD)	(FOOT)
47+00.00	TO	47+03.69	3.69		9.2	5.9			1.1		4.1	
47+03.69	TO	47+13.71	10.02		25.1	21.5			4.3		11.1	
47+13.71	TO	47+34.05	20.34		50.9	43.7	9.4		3.5		22.6	
47+34.05	TO	47+48.32	14.27		35.7	38.5	4.4	6.1	2.4		15.9	
47+48.32	TO	48+21.45	73.13	268.1	585.0	117.0				195.0	65.0	
48+21.45	TO	48+43.33	21.88	69.2	PCC CONNECTOR PAVEMENT - SEE PCC PAVING SCHEDULE							
48+43.33	TO	51+71.33	328.00	APPROACH PAVEMENT / STRUCTURE GAP - SEE STRUCTURE PLANS SN 074-0088								
51+71.33	TO	51+93.21	21.88	69.2	PCC CONNECTOR PAVEMENT - SEE PCC PAVING SCHEDULE							
51+93.21	TO	52+71.11	77.90	302.9	467.4	132.4				207.7	86.6	77.9
52+71.11	TO	52+80.34	9.23		23.1	24.9	2.8	3.9	1.6		10.3	9.2
52+80.34	TO	52+91.65	11.31		28.3	24.3	5.2		1.9		12.6	11.3
52+91.65	TO	52+97.73	6.08		15.2	13.1			2.6		6.8	6.1
52+97.73	TO	53+00.00	2.27		5.7	3.6			0.7		2.5	2.3
SUBTOTAL				709.4	1245.6	424.9	21.8	10.0	18.1	402.7	237.5	106.8
TOTAL				709	1246	425	22	10	18	403	238	107

EARTHWORK SCHEDULE

LOCATION	CUT AREA	FILL AREA	20200100 EARTH EXCAVATION	EARTH EXCAVATION ADJ. FOR 25% SHRINKAGE	EMBANKMENT	BALANCE WASTE (+) SHORTAGE (-)
STA.	(SQ FT)	(SQ FT)	(CU YD)	(CU YD)	(CU YD)	(CU YD)
47+00.00	9.55	1.90	0.0	0.0	0.0	0.0
47+25.00	6.46	5.19	7.4	5.6	3.3	2.3
47+50.00	13.57	6.64	9.3	7.0	5.5	1.5
47+75.00	9.36	11.79	10.6	8.0	8.5	-0.5
48+00.00	7.17	18.34	7.7	5.8	13.9	-8.1
48+16.45	6.22	22.06	4.1	3.1	12.3	-9.2
48+25.00	0.47	39.91	1.1	0.8	9.8	-9.0
48+50.00	1.63	45.47	1.0	0.8	39.5	-38.7
48+75.00	0.00	170.47	0.8	0.6	100.0	-99.4
48+80.29	0.00	123.87	0.0	0.0	28.8	-28.8
SN 074-0088						
51+34.37	0.00	94.00	0.0	0.0	0.0	0.0
51+50.00	1.56	251.81	0.5	0.4	100.1	-99.7
51+75.00	2.13	43.95	1.7	1.3	136.9	-135.6
51+98.21	2.18	28.00	1.9	1.4	30.9	-29.5
52+00.00	2.18	27.91	0.1	0.1	1.9	-1.8
52+25.00	2.84	23.19	2.3	1.7	23.7	-22.0
52+50.00	4.08	18.37	3.2	2.4	19.2	-16.8
52+75.00	4.21	21.16	3.8	2.9	18.3	-15.4
53+00.00	10.44	5.36	6.8	5.1	12.3	-7.2
SUBTOTAL			62.3	47.0	564.9	-517.9
TOTAL			60	45	565	-520

PCC PAVING SCHEDULE

LOCATION			LENGTH	31200100 STABILIZED SUBBASE 4"	42000060 WELDED WIRE REINFORCEMENT	42000080 PAVEMENT CONNECTOR (PCC) FOR BRIDGE APPROACH SLAB
STA.	TO	ST.	(FOOT)	(SQ YD)	(SQ YD)	(SQ YD)
47+00.00	TO	47+48.32	48.32		SEE HMA PAVING SCHEDULE	
47+48.32	TO	48+21.45	73.13		SEE HMA PAVING SCHEDULE	
48+21.45	TO	48+43.33	21.88	66.2	77.80	77.80
48+43.33	TO	51+71.33	328.00	APPROACH PAVEMENT / STRUCTURE GAP SEE STRUCTURE PLANS SN 074-0088		
51+71.33	TO	51+93.21	21.88	66.2	77.80	77.80
51+93.21	TO	52+71.11	77.90		SEE HMA PAVING SCHEDULE	
52+71.11	TO	53+00.00	28.89		SEE HMA PAVING SCHEDULE	
SUBTOTAL				132.4	155.60	155.60
TOTAL				132	156	156

SEEDING SCHEDULE

LOCATION			SIDE	LENGTH	25000210 SEEDING, CLASS 2A	25000400 NITROGEN FERTILIZER NUTRIENT	25000500 POTASSIUM FERTILIZER NUTRIENT	25000600 PHOSPHORUS FERTILIZER NUTRIENT	25100630 EROSION CONTROL BLANKET
STA.	TO	STA.	LT/RT	(FOOT)	(ACRE)	(POUND)	(POUND)	(POUND)	(SQ YD)
43+85.00	TO	49+18.33	LT	533.33	0.38	34.2	34.2	34.2	1822.8
45+00.00	TO	48+75.00	RT	375.00	0.42	37.8	37.8	37.8	2043.3
51+10.00	TO	54+35.41	RT	325.41	0.48	43.2	43.2	43.2	2334.6
51+62.17	TO	53+50.00	LT	187.83	0.19	17.1	17.1	17.1	918.9
SUBTOTAL					1.47	132.3	132.3	132.3	7119.6
TOTAL					1.5	132	132	132	7120

AGGREGATE SHOULDER SCHEDULE

LOCATION			LENGTH	48101498 AGGREGATE SHOULDERS, TYPE B 4"
STA.	TO	ST.	FOOT	(SQ YD)
47+00.00	TO	48+51.54	151.54	101.0
48+51.54	TO	48+65.29	13.75	4.6
48+65.29	TO	51+49.38	284.09	STRUCTURE OMISSION
51+49.38	TO	51+63.12	13.74	4.6
51+63.12	TO	53+00.00	136.88	91.2
SUBTOTAL				201.4
TOTAL				201

MODEL: Schedules [Sheet]
FILE NAME: P:\22E3703-3 - 70629 White Heath\70629 Section 74-69 BR\CADD Sheets\D570629-sht-schedules.dgn

BENTON & ASSOCIATES, INC.
CONSULTING ENGINEERS / LAND SURVEYORS
1910 WEST LAFAYETTE AVE.
JACKSONVILLE, IL 62650
PHONE: 217-243-4146 FAX: 217-243-4149
IL DESIGN FIRM REGISTRATION NO. 184000052

USER NAME = druholl	DESIGNED - DSR	REVISED -
	DRAWN - DSR	REVISED -
PLOT SCALE = $SCALE$	CHECKED - WJS	REVISED -
PLOT DATE = 8/2/2024	DATE - AUGUST 2, 2024	REVISED -

STATE OF ILLINOIS
DEPARTMENT OF TRANSPORTATION

SCHEDULE OF QUANTITIES
WHITE HEATH ROAD (OLD 47)

SCALE: SHEET 1 OF 2 SHEETS STA. TO STA.

F.A.I RTE.	SECTION	COUNTY	TOTAL SHEETS	SHEET NO.
72	74-69BR	PIATT	78	14
		CONTRACT NO. 70629		
		ILLINOIS FED. AID PROJECT		

SCHEDULE OF QUANTITIES

DRAINAGE SCHEDULE										
LOCATION			SIDE	LENGTH	54262712	60100945	60300305	60615910	61000050	61000335
					METAL FLARED END SECTIONS 12"	PIPE DRAINS 12"	FRAMES AND LIDS TO BE ADJUSTED	PAVED DITCH, TYPE A-22	CONCRETE THRUST BLOCKS	TYPE G INLET BOX
STA.	OFFSET		LT/RT	(FOOT)	(EACH)	(FOOT)	(EACH)	(FOOT)	(EACH)	(EACH)
WHITE HEATH ROAD										
48+16.45	14.88		LT			42.6			1	1
	14.88		RT			38.7			1	1
	54.89		LT		1					
	51.70		RT		1					
51+98.21	14.88		LT			48.5			1	1
	14.88		RT			59.7			1	1
	61.05		LT		1					
	71.39		RT		1					
I-72										
1286+00.00	0.86		RT				1			
45+00.00	TO	48+75.00	RT	375.00				40		
51+62.17	TO	53+50.00	LT	187.83				20		
SUBTOTAL					4	189.5	1	60	4	4
TOTAL					4	190	1	60	4	4

PAVEMENT MARKING SCHEDULE										
LOCATION			LENGTH	70300100		70300150	78001110		78300202
				SHORT TERM PAVEMENT MARKINGS		SHORT TERM PAVEMENT MARKING REMOVAL	PAINT PAVEMENT MARKING - LINE 4" (SEE NOTE 1)		PAVEMENT MARKING REMOVAL - WATER BLASTING (SEE NOTE 1)
				WHITE DIAGONAL	YELLOW SKIP-DASH		SOLID WHITE EDGE LINE	DOUBLE SOLID YELLOW	
STA	TO	STA	(FOOT)	(FOOT)	(FOOT)	(SQ FT)	(FOOT)	(FOOT)	(SQ FT)
47+00.00	TO	47+48.32	48.32				96.6	96.6	64.4
47+48.32	TO	48+21.45	73.13				146.2	146.2	97.5
48+21.45	TO	48+43.33	21.88				43.8	43.8	29.2
48+43.33	TO	51+71.33	328.00	24.0	54.5	26.2	656.0	656.0	437.3
51+71.33	TO	51+93.21	21.88				43.8	43.8	29.2
51+93.21	TO	52+71.11	77.90				155.8	155.8	103.9
52+71.11	TO	53+00.00	28.89				57.8	57.8	38.5
SUB TOTAL				24.0	54.5	26.2	1200.0	1200.0	800.0
TOTAL				79		26	2400		800

NOTE 1: TEMPORARY PAVEMENT MARKINGS SHALL MATCH THE PERMANENT PAVEMENT MARKING LOCATIONS AS SHOWN IN THE ABOVE SCHEDULE.

TEMPORARY CONCRETE BARRIER SCHEDULE						
LOCATION			LENGTH	SIDE	70400100	70600260
					TEMPORARY CONCRETE BARRIER	IMPACT ATTENUATORS, TEMPORARY (FULLY REDIRECTIVE, NARROW), TEST LEVEL 3
STA.	TO	STA.	(FOOT)	LT/RT	(FOOT)	(EACH)
1284+50.00	TO	1290+62.50	612.50	LT	612.5	
1282+37.50	TO	1288+00.00	562.50	RT	562.5	
1285+00.00	TO	1288+00.00	300.00	RT	300.0	
1285+00.00	TO	1290+62.50	562.50	LT	562.5	
STA.	OFFSET			LT/RT		
1285+37.50	29.75			RT		1
1285+00.00	95.63			RT		1
1290+62.50	57.90			LT		1
1290+62.50	29.82			LT		1
SUBTOTAL					2037.5	4.0
TOTAL					2037.5	4

SAND MODULE IMPACT ATTENUATOR SCHEDULE			
LOCATION	64300450	64301090	X6431110
	IMPACT ATTENUATORS (NON-REDIRECTIVE), TEST LEVEL 3	ATTENUATOR BASE	REMOVE ATTENUATOR BASE
STA.	(EACH)	(SQ YD)	(EACH)
I-72			
	1.0	27.3	1
	1.0	27.3	1
	2.0	54.6	2.0
TOTAL	2	55	2

EROSION CONTROL SCHEDULE						
LOCATION			28000250	28000305	28000400	28000500
			TEMPORARY EROSION CONTROL SEEDING	TEMPORARY DITCH CHECKS	PERIMETER EROSION BARRIER	INLET AND PIPE PROTECTION
STA.	TO	STA.	(POUND)	(FOOT)	(FOOT)	(EACH)
43+00.00	TO	44+00.00			52.84	
44+00.00	TO	45+00.00			148.04	
45+00.00	TO	46+00.00			200.67	
46+00.00	TO	47+00.00			200.53	
47+00.00	TO	48+00.00			200.47	
48+00.00	TO	49+00.00	147.0		232.07	
49+00.00	TO	50+00.00			85.94	
50+00.00	TO	51+00.00			41.58	
51+00.00	TO	52+00.00			173.90	
52+00.00	TO	53+00.00			200.90	
53+00.00	TO	54+00.00			195.85	
54+00.00	TO	55+00.00			44.05	
STA.	OFFSET	SIDE				
48+74.22	67.75	RT				1
50+41.41	72.38	RT				1
51+34.23	79.19	RT		10.0		
SUBTOTAL			147.0	10.0	1776.8	2
TOTAL			147	10	1777	2

NOTE 1: SINGLE APPLICATION WAS ASSUMED FOR QUANTITY ESTIMATION

GUARDRAIL SCHEDULE												
LOCATION			SIDE	LENGTH	LENGTH OF NEED	63000001	63100045	63100085	63100167	63200310	78200005	78200010
						STEEL PLATE BEAM GUARDRAIL, TYPE A, 6 FOOT	TRAFFIC BARRIER TERMINAL, TYPE 2	TRAFFIC BARRIER TERMINAL, TYPE 6	TRAFFIC BARRIER TERMINAL, TYPE 1 (SPECIAL) TANGENT	GUARDRAIL REMOVAL	GUARDRAIL REFLECTORS, TYPE A	BARRIER WALL REFLECTORS, TYPE B
STA.	TO	STA.	LT/RT	(FOOT)	STA.	(FOOT)	(EACH)	(EACH)	EACH	(FOOT)	(EACH)	(EACH)
WHITE HEATH ROAD												
43+71.61	TO	48+72.51	LT	500.90						500.9		
41+90.89	TO	42+28.39		37.50	42+10.60				1			
42+28.39	TO	48+28.39		600.00		600.0					7	
48+28.39	TO	48+65.89		37.50				1				
43+56.86	TO	48+59.97	RT	503.11						503.1		
42+75.58	TO	43+03.59		37.50	42+10.60				1			
43+03.59	TO	48+14.64		512.50		512.5					7	
48+14.64	TO	48+52.14		37.50				1				
51+42.08	TO	54+40.00	RT	666.90						666.9		
51+48.78	TO	51+86.28		37.50				1				
51+86.28	TO	54+40.00		637.50	53+56.75, ±406'RT	637.5					7	
54+40.00	TO	54+40.00		12.50			1					
51+45.55	TO	62+53.72	LT	1108.17						1108.2		
51+62.52	TO	52+00.02		37.50				1				
52+00.02	TO	62+50.02		1050.00		1050.0					8	
62+50.02	TO	62+87.52		37.50	63+39.40				1			
SN 074-0088												
48+52.14	TO	51+48.78	RT	296.64								1
48+65.89	TO	51+62.52	LT	296.63								1
I-72												
1285+48.20	TO	1286+70.68	RT	122.48						122.5		
1286+14.30	TO	1288+98.53	LT	284.23						284.2		
SUBTOTAL						2800.0	1	4	3	3185.8	29	2
TOTAL						2800.0	1	4	3	3186	29	2

MODEL: Schedules-1 [Sheet]
FILE NAME: P:\22E3703-3 - 70629 White Heath\70629 Section 74-69 BR\CADD Sheets\D570629-sht-schedules.dgn

BENTON & ASSOCIATES, INC.
CONSULTING ENGINEERS / LAND SURVEYORS
1916 WEST LAFAYETTE AVE.
JACKSONVILLE, IL 62650
PHONE: 217-243-4146 FAX: 217-243-4149
IL DESIGN FIRM REGISTRATION NO. 184-000252

USER NAME = druholl	DESIGNED - DSR	REVISED -	
	DRAWN - DSR	REVISED -	
PLOT SCALE = $SCALE$	CHECKED - WJS	REVISED -	
PLOT DATE = 8/1/2024	DATE - AUGUST 2, 2024	REVISED -	

STATE OF ILLINOIS
DEPARTMENT OF TRANSPORTATION

SCHEDULE OF QUANTITIES
WHITE HEATH ROAD (OLD 47)

SCALE: SHEET 2 OF 2 SHEETS STA. TO STA.

F.A.I RTE.	SECTION	COUNTY	TOTAL SHEETS	SHEET NO.
72	74-69BR	PIATT	78	15
		CONTRACT NO. 70629		
	ILLINOIS	FED. AID PROJECT		

BENCHMARKS

BM #4907-1 - CHISELED "□" ON TOP OF NORTHEAST
WINGWALL OF STRUCTURE NUMBER 074-0026,
EL: 722.985

BM #4907-2 - CHISELED "□ " ON TOP OF NORTHEAST
CORNER OF MEDIAN INLET, STATION 1285+60.50, 1.00' LEFT,
EL: 702.584

CONTROL POINTS					
POINT NUMBER	NORTHING	EASTING	ELEVATION	STATION	OFFSET
400	1244327.465	929576.994	723.64	43+02.25	39.21' RT
401	1244310.594	930097.539	725.29	48+21.57	20.31' LT
402	1244086.051	930696.773	714.79	54+41.71	105.48' RT
403	1244126.447	930804.382	712.82	55+42.05	58.73' RT
404	1244225.830	930559.581	717.58	52+91.30	15.30' LT
405	1244239.992	931528.321	688.73	62+53.57	70.67' RT
406	1244325.381	931500.227	689.37	62+58.68	19.07' LT
411	1244222.232	930275.481	702.61	50+11.94	36.52' RT
418	1244299.637	930309.174	701.46	50+31.99	45.48' LT
419	1244884.601	930770.804	704.23	54+47.42	696.48' LT
420	1244902.588	930611.821	703.99	52+27.77	691.09' LT
421	1243639.422	929782.222	707.92	46+24.90	694.68' RT

OLD 47 ALIGNMENT CONTROL POINTS				
POINT NUMBER	STATION	NORTHING	EASTING	DESCRIPTION
N/A	39+00.00	1244382.135	929178.754	POT
28	39+48.32	1244382.214	929227.078	PC
121	42+01.84	1244374.275	929480.426	RAMP "A" (STA: 100+00)
122	42+73.17	1244369.035	929551.560	RAMP "B" (STA: 216+70)
100	42+80.82	1244382.751	929559.577	PI - IP SET
N/A	46+11.68	1244326.246	929887.241	PT - DISK
N/A	52+96.60	1244209.851	930562.199	PC
123	54+61.51	1244189.491	930725.790	RAMP "C" (STA: 300+00)
124	55+32.51	1244185.470	930796.671	RAMP "D" (STA: 419+83.25)
136	59+66.23	1244096.054	931222.093	PI
N/A	65+76.10	1244450.470	931790.246	PT - DISK
98	77+19.11	1245055.426	932760.035	POT - MAG NAIL

I-72 ALIGNMENT CONTROL POINTS				
POINT NUMBER	STATION	NORTHING	EASTING	DESCRIPTION
N/A	1275+00	1243305.485	929648.735	POT
N/A	1296+08.07	1245072.491	930798.363	PC

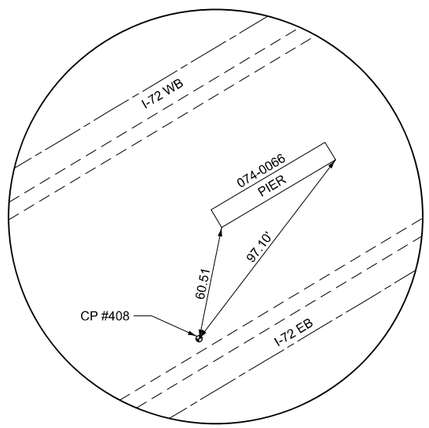

CONTROL POINT #408 - OFF SITE

IRON PIN W/CAP
N: 1229683.851
E: 913887.363

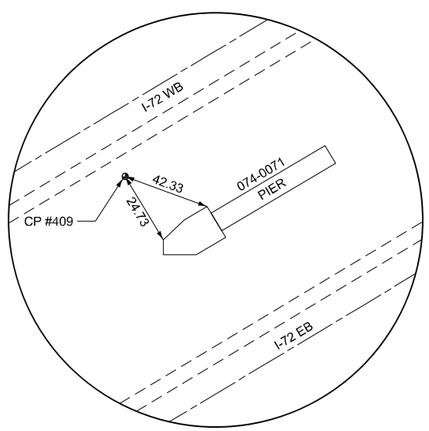

CONTROL POINT #409 - OFF SITE

IRON PIN W/CAP
N: 1233390.773
E: 918951.954

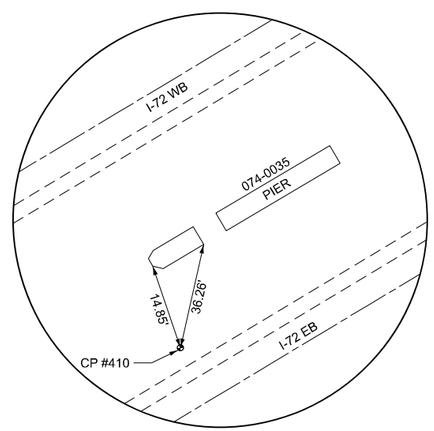

CONTROL POINT #410- OFF SITE

IRON PIN W/CAP
N: 1240036.474
E: 925956.019

MODEL: ATB Ties-1 [Sheet]
FILE NAME: P:\22E3703-3 - 70629 White Heath\70629 Section 74-69 BR\CADD Sheets\D570629-sht-ATB.dgn

BENTON & ASSOCIATES, INC.
CONSULTING ENGINEERS / LAND SURVEYORS
1570 WEST LAFAYETTE AVE.
JACKSONVILLE, IL 62650
PHONE: 217-245-5146 FAX: 217-245-1819
IL DESIGN FIRM REGISTRATION NO. 184-000052

USER NAME = druholl	DESIGNED - DSR	REVISED -	
	DRAWN - RDS	REVISED -	
PLOT SCALE = $SCALE$	CHECKED - WJS	REVISED -	
PLOT DATE = 7/30/2024	DATE - AUGUST 2, 2024	REVISED -	

STATE OF ILLINOIS
DEPARTMENT OF TRANSPORTATION

ALIGNMENTS, TIES AND BENCHMARKS
WHITE HEATH ROAD (OLD 47)

SCALE: SHEET 1 OF 3 SHEETS STA. TO STA.

F.A.I RTE.	SECTION	COUNTY	TOTAL SHEETS	SHEET NO.
72	74-69BR	PIATT	78	16
		CONTRACT NO. 70629		
		ILLINOIS	FED. AID PROJECT	

CONTROL POINTS

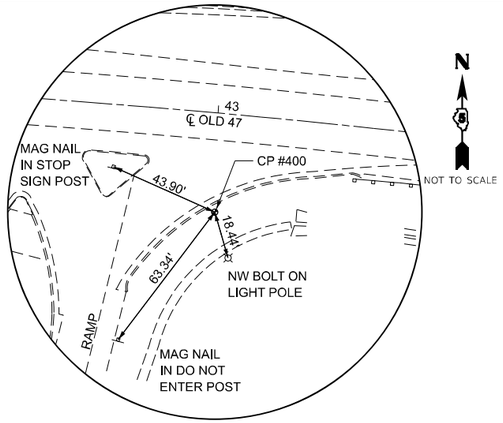

CONTROL POINT #400

IRON PIN W/CAP
N: 1244327.465
E: 929576.994

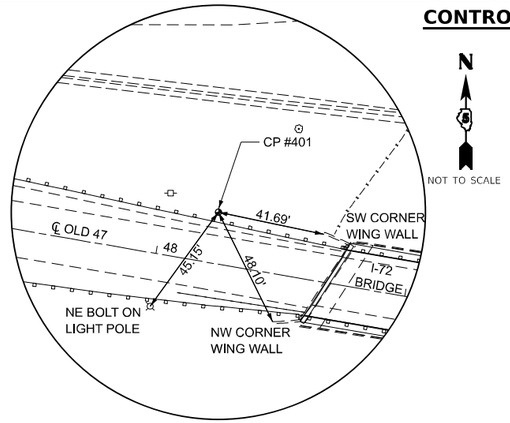

CONTROL POINT #401

IRON PIN W/CAP
N: 1244310.594
E: 930097.539

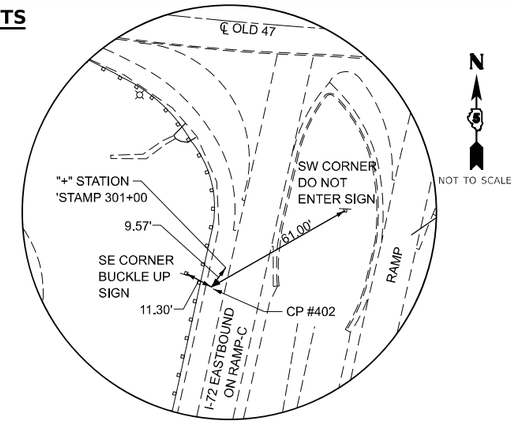

CONTROL POINT #402

MAG NAIL IN CONCRETE SHOULDER
N: 1244086.051
E: 930696.773

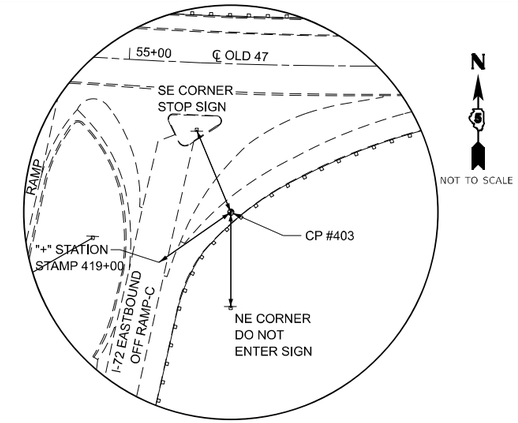

CONTROL POINT #403

MAG NAIL IN CONCRETE SHOULDER
N: 1244126.447
E: 930804.382

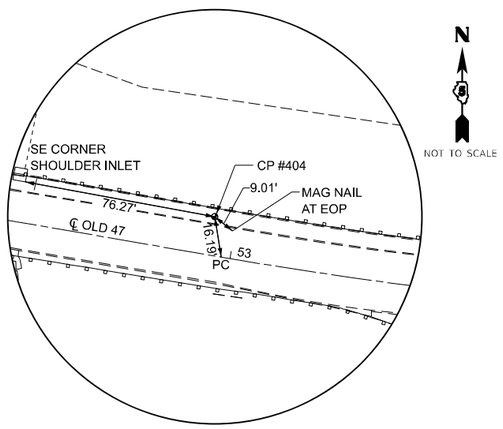

CONTROL POINT #404

IRON PIN W/CAP
N: 1244225.830
E: 930559.581

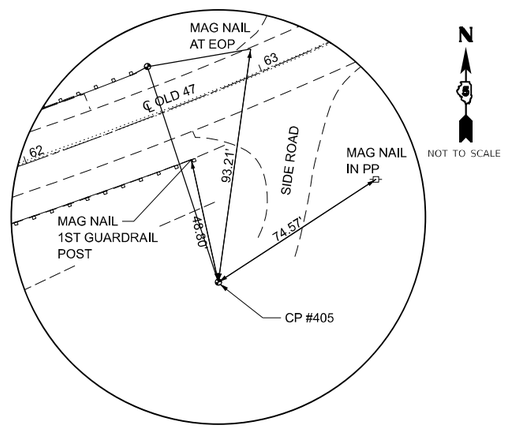

CONTROL POINT #405

IRON PIN W/CAP
N: 1244239.992
E: 931528.321

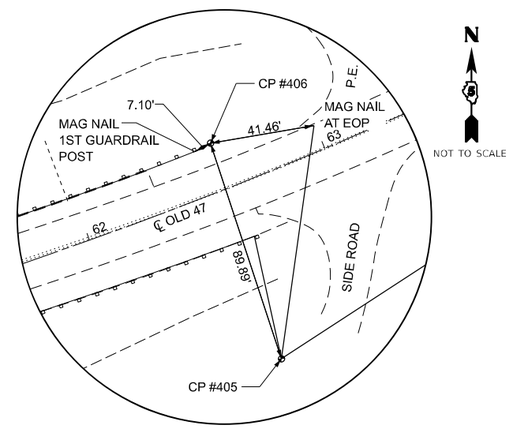

CONTROL POINT #406

IRON PIN W/CAP
N: 1244325.381
E: 931500.227

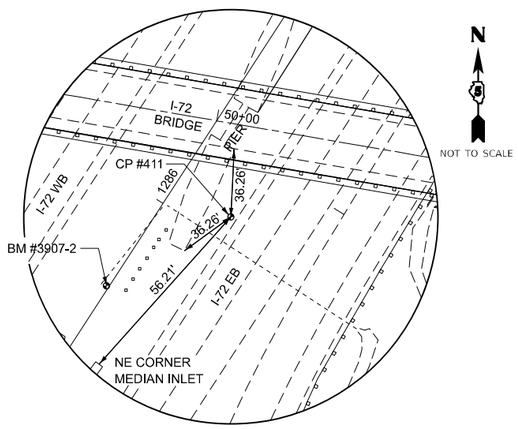

CONTROL POINT #411

IRON PIN W/CAP
N: 1244222.232
E: 930275.481

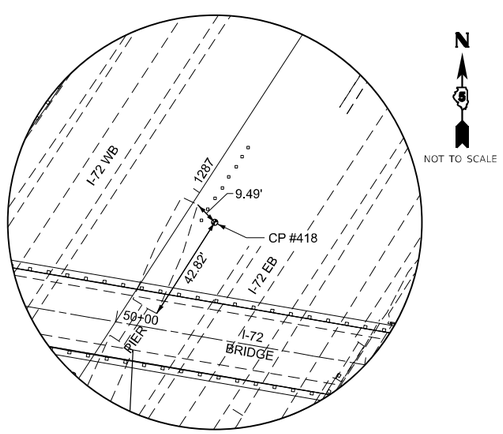

CONTROL POINT #418

IRON PIN W/CAP
N:1244299.637
E: 930309.174

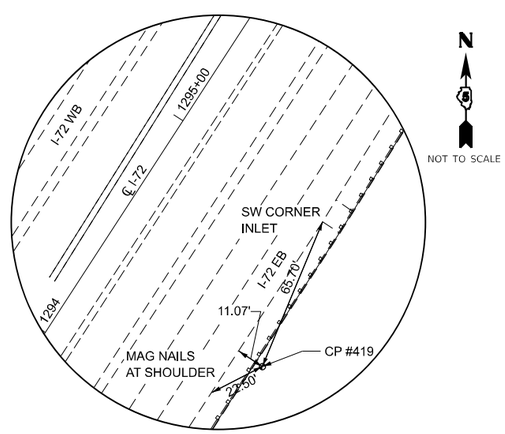

CONTROL POINT #419

IRON PIN W/CAP
N: 1244884.601
E: 930770.804

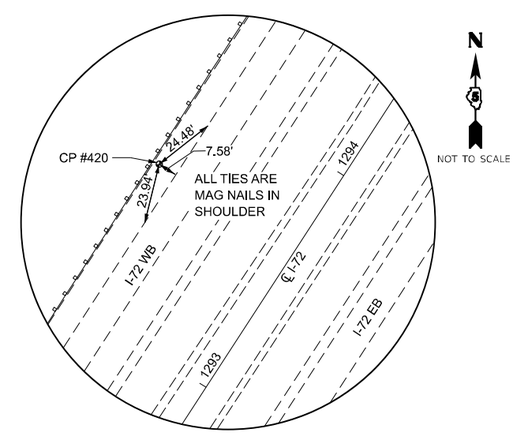

CONTROL POINT #420

MAG NAIL IN SHOULDER
N: 1244902.588
E: 930611.821

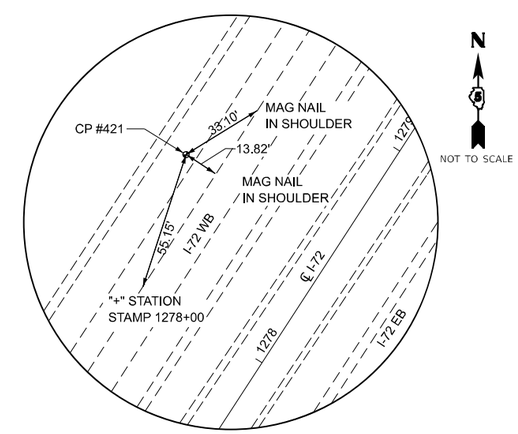

CONTROL POINT #421

IRON PIN W/CAP
N: 1243639.422
E: 929782.222

MODEL: ATB-Ties [Sheet]
FILE NAME: P:\22E3703-3 - 70629 White Heath\70629 Section 74-69 BR\CADD Sheets\D570629-sht-ATB.dgn

BENTON & ASSOCIATES, INC.
CONSULTING ENGINEERS / LAND SURVEYORS
1970 WEST LAFAYETTE AVE.
JACKSONVILLE, IL 62650
PHONE: 217-245-6148 FAX: 217-245-6149
IL DESIGN FIRM REGISTRATION NO. 184-000852

USER NAME = druholl	DESIGNED - DSR	REVISED -	
	DRAWN - RDS	REVISED -	
PLOT SCALE = $SCALE$	CHECKED - WJS	REVISED -	
PLOT DATE = 7/30/2024	DATE - AUGUST 2, 2024	REVISED -	

STATE OF ILLINOIS
DEPARTMENT OF TRANSPORTATION

ALIGNMENTS, TIES AND BENCHMARKS
WHITE HEATH ROAD (OLD 47)

SCALE: | SHEET 2 OF 3 SHEETS | STA. | TO STA.

F.A.I RTE.	SECTION	COUNTY	TOTAL SHEETS	SHEET NO.
72	74-69BR	PIATT	78	17
		CONTRACT NO. 70629		
	ILLINOIS	FED. AID PROJECT		

SECTION 21, T. 19 N., R. 6 E.,3° P.M.

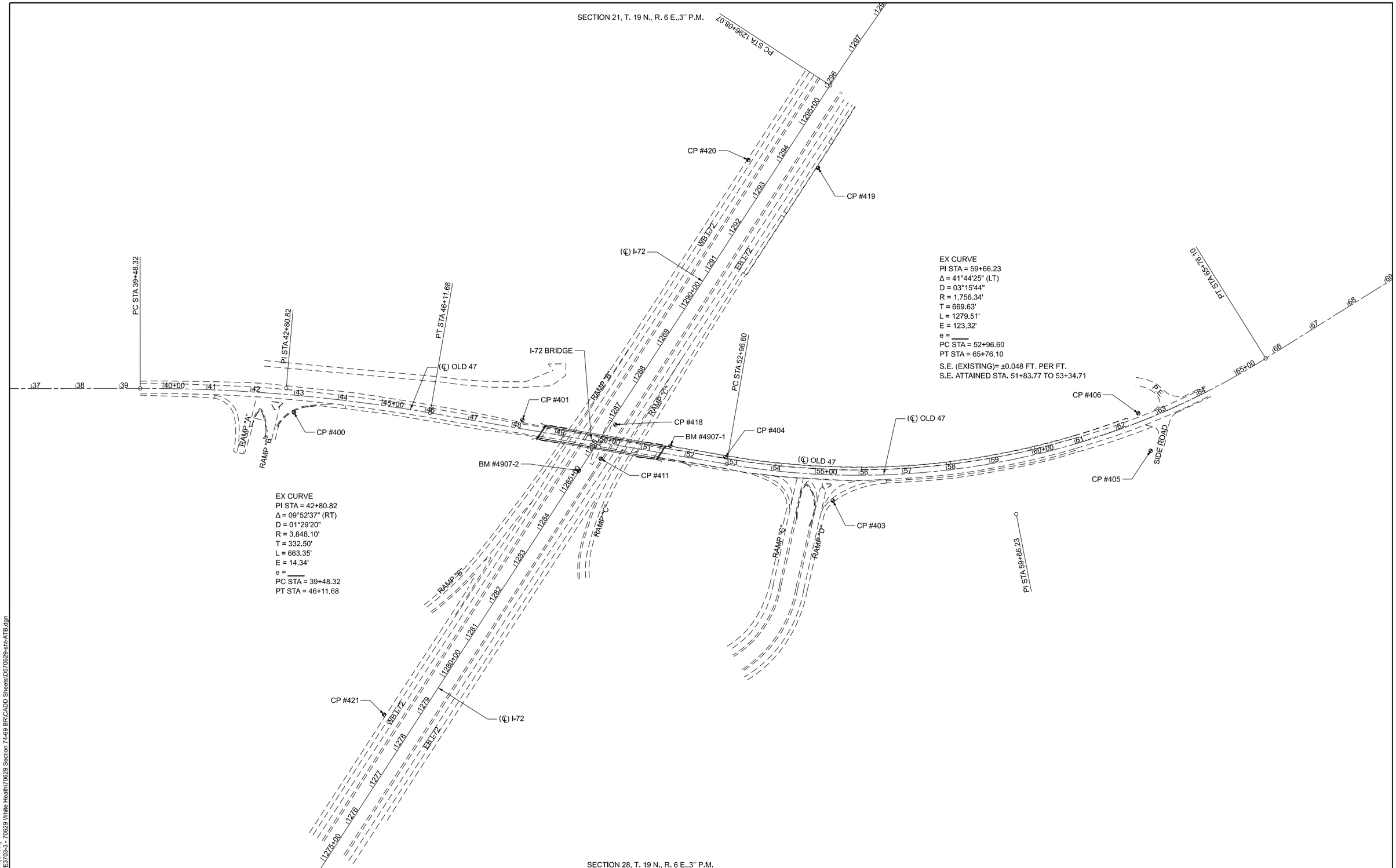

SECTION 28, T. 19 N., R. 6 E.,3° P.M.

MODEL: ATB - Plan [Sheet]
FILE NAME: P:\22E3703-3 - 70629 White Heath\70629 Section 74-69 BR\CADD Sheets\D570629-sht-ATB.dgn

BENTON & ASSOCIATES, INC.
CONSULTING ENGINEERS / LAND SURVEYORS
1916 WEST LAFAYETTE AVE.
JACKSONVILLE, IL 62650
PHONE: 217-243-4146 FAX: 217-243-4149
IL DESIGN FIRM REGISTRATION NO. 184002052

USER NAME = druholl	DESIGNED - DSR	REVISED -	
	DRAWN - RDS	REVISED -	
PLOT SCALE = $SCALE$	CHECKED - WJS	REVISED -	
PLOT DATE = 7/30/2024	DATE - AUGUST 2, 2024	REVISED -	

STATE OF ILLINOIS
DEPARTMENT OF TRANSPORTATION

ALIGNMENTS, TIES AND BENCHMARKS
WHITE HEATH ROAD (OLD 47)

SCALE: | SHEET 3 OF 3 SHEETS | STA. TO STA.

F.A.I RTE.	SECTION	COUNTY	TOTAL SHEETS	SHEET NO.
72	74-69BR	PIATT	78	18
		CONTRACT NO. 70629		
	ILLINOIS	FED. AID PROJECT		

LEGEND

- DENOTES TREE REMOVAL
- DENOTES PAVEMENT REMOVAL (FULL DEPTH)
- DENOTES HMA SURFACE REMOVAL, 1¾"
- DENOTES HMA SURFACE REMOVAL (BUTT JOINT)
- DENOTES HMA SHOULDER REMOVAL

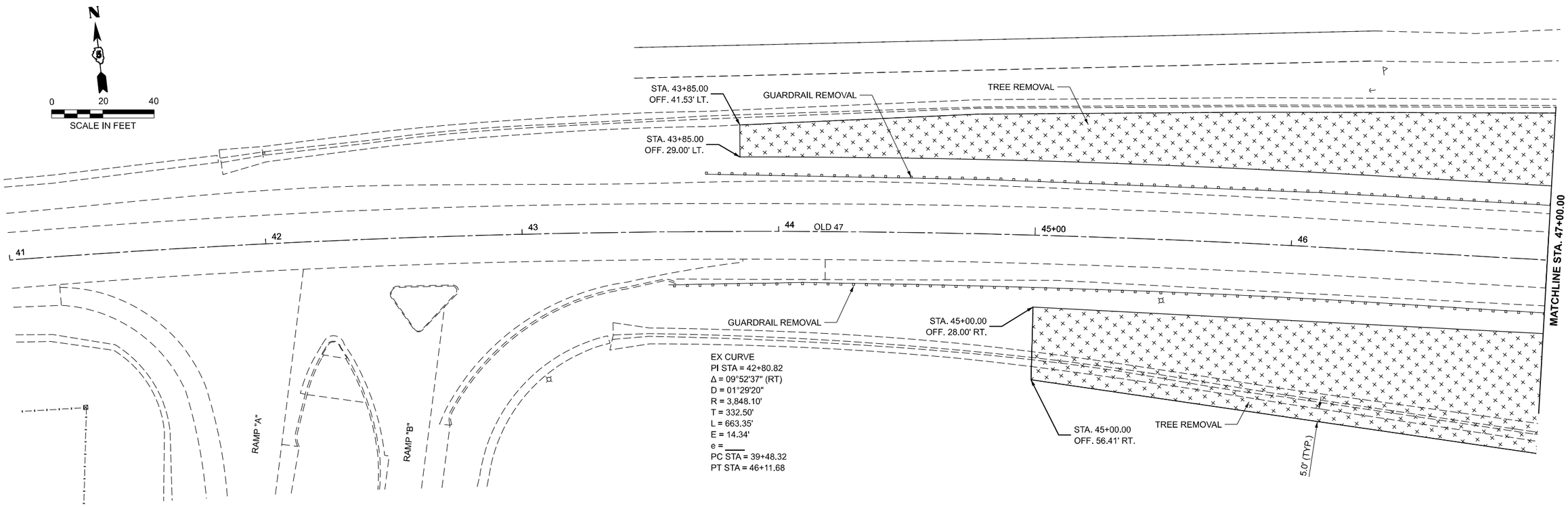

MODEL: White Heath Rd Sht
FILE NAME: P:\22E3703-3 - 70629 White Heath\70629 Section 74-69 BR\CADD Sheets\D570629-sht-removal.dgn

BENTON & ASSOCIATES, INC. CONSULTING ENGINEERS / LAND SURVEYORS 1910 WEST LAFAYETTE AVE. JACKSONVILLE, IL 62650 PHONE: 217-245-4146 FAX: 217-243-4149 IL DESIGN FIRM REGISTRATION NO. 184002052	USER NAME = druholl	DESIGNED - DSR	REVISED -	STATE OF ILLINOIS DEPARTMENT OF TRANSPORTATION	REMOVAL PLANS WHITE HEATH ROAD (OLD 47)	F.A.I RTE.	SECTION	COUNTY	TOTAL SHEETS / SHEET NO.
		DRAWN - RDS	REVISED -			72	74-69BR	PIATT	78 / 19
	PLOT SCALE = $SCALE$	CHECKED - WJS	REVISED -					CONTRACT NO. 70629	
	PLOT DATE = 8/1/2024	DATE - AUGUST 2, 2024	REVISED -		SCALE: SHEET 1 OF 4 SHEETS STA. 41+00.00 TO STA. 47+00.00		ILLINOIS	FED. AID PROJECT	

LEGEND

- DENOTES TREE REMOVAL
- DENOTES PAVEMENT REMOVAL (FULL DEPTH)
- DENOTES HMA SURFACE REMOVAL, 1¾"
- DENOTES HMA SURFACE REMOVAL (BUTT JOINT)
- DENOTES HMA SHOULDER REMOVAL

NOTES:

REMOVAL OF EXISTING APPROACH SLABS ARE INCLUDED IN THE COST OF "PAVEMENT REMOVAL (FULL DEPTH)".

THE EXISTING APPROACH PAVEMENT IS SHOWN ON THE ATTACHED SHEET.

THE ORIGINAL STRUCTURE PLANS WILL BE INCLUDED WITH THE PS&E SUBMITTAL FOR INCLUSION ON THE LETTING SITE UNDER "ADDITIONAL INFORMATION" FOLDER.

N

0 20 40

SCALE IN FEET

EX CURVE
PI STA = 59+66.23
Δ = 41°44'25" (LT)
D = 03°15'44"
R = 1,756.34'
T = 669.63'
L = 1279.51'
E = 123.32'
e = ____
PC STA = 52+96.60
PT STA = 65+76.10

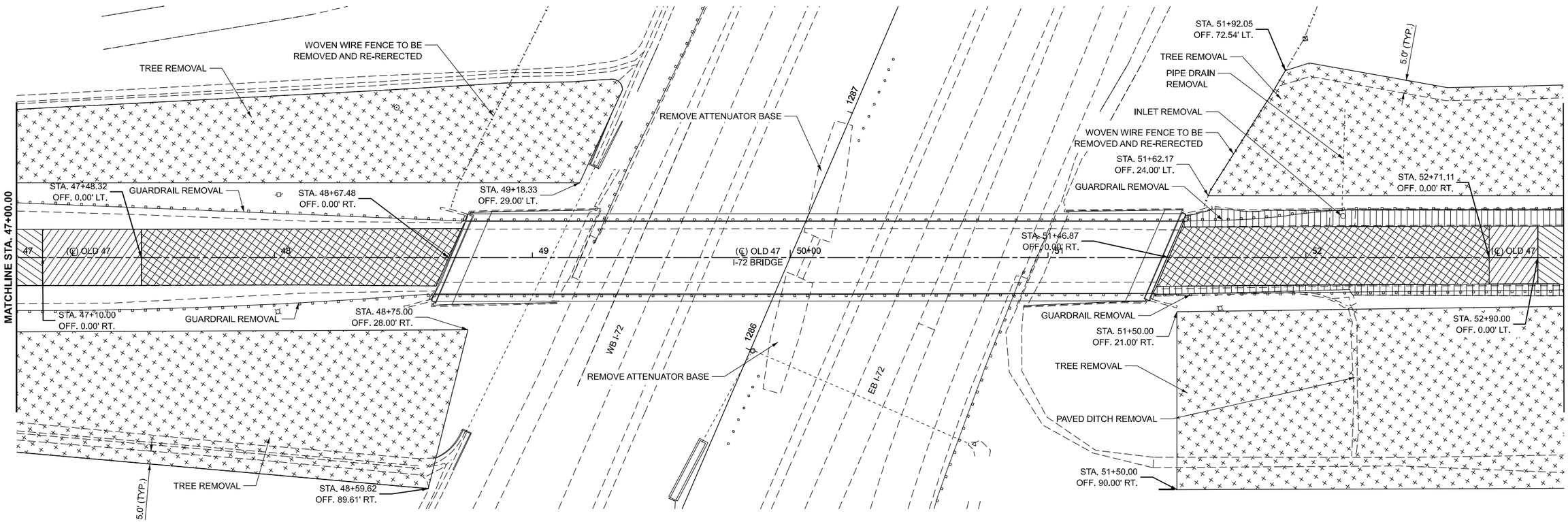

MODEL: White Heath Rd-1 Sht
FILE NAME: P:\2E3703-3 - 70629 White Heath\70629 Section 74-69 BR\CADD Sheets\D570629-sht-removal.dgn

BENTON & ASSOCIATES, INC.
CONSULTING ENGINEERS / LAND SURVEYORS
1916 WEST LAFAYETTE AVE.
JACKSONVILLE, IL 62650
PHONE: 217-243-4146 FAX: 217-243-4149
IL DESIGN FIRM REGISTRATION NO. 184002052

USER NAME = druholl	DESIGNED - DSR	REVISED -	
	DRAWN - RDS	REVISED -	
PLOT SCALE = $SCALE$	CHECKED - WJS	REVISED -	
PLOT DATE = 8/1/2024	DATE - AUGUST 2, 2024	REVISED -	

STATE OF ILLINOIS
DEPARTMENT OF TRANSPORTATION

REMOVAL PLANS
WHITE HEATH ROAD (OLD 47)

SCALE: | SHEET 2 OF 4 SHEETS | STA. 47+00.00 TO STA. 53+00.00

F.A.I RTE.	SECTION	COUNTY	TOTAL SHEETS	SHEET NO.
72	74-69BR	PIATT	78	20

CONTRACT NO. 70629

ILLINOIS | FED. AID PROJECT

LEGEND

- DENOTES TREE REMOVAL
- DENOTES PAVEMENT REMOVAL (FULL DEPTH)
- DENOTES HMA SURFACE REMOVAL, 1¾"
- DENOTES HMA SURFACE REMOVAL (BUTT JOINT)
- DENOTES HMA SHOULDER REMOVAL

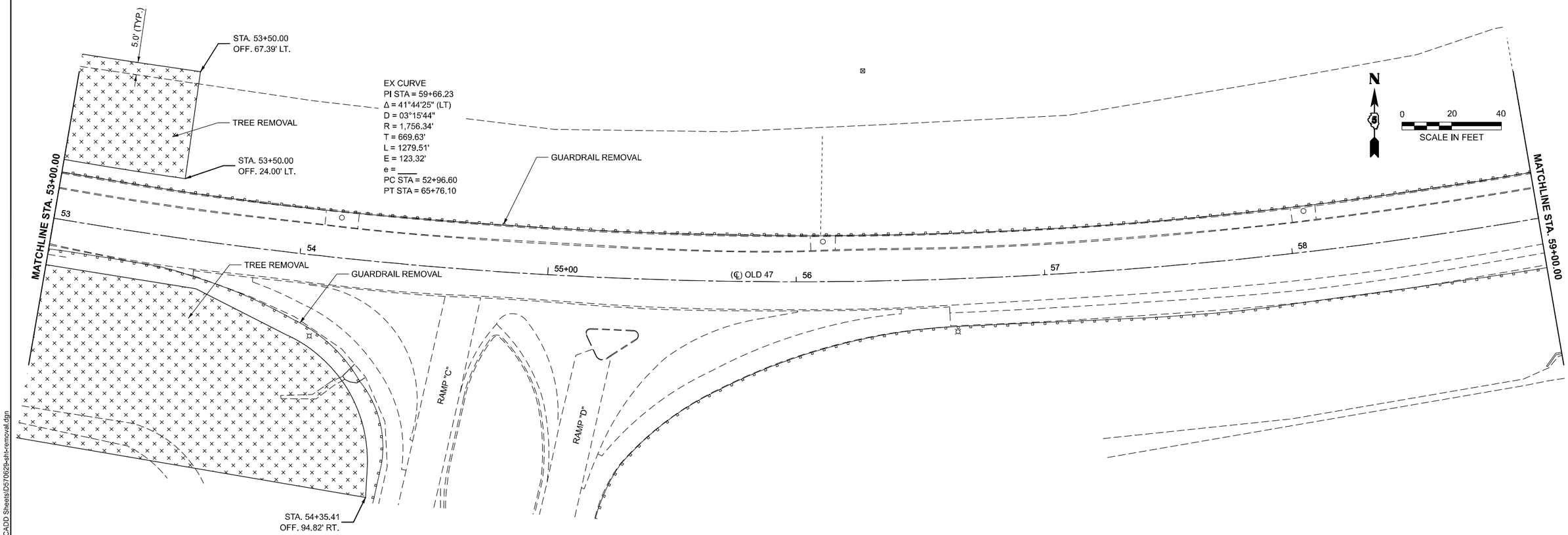

MODEL: White Heath Rd-2 Sht
FILE NAME: P:\22E3703-3 - 70629 White Heath\70629 Section 74-69 BR\CADD Sheets\D570629-sht-removal.dgn

BENTON & ASSOCIATES, INC.
CONSULTING ENGINEERS / LAND SURVEYORS
1916 WEST LAFAYETTE AVE.
JACKSONVILLE, IL 62650
PHONE: 217-243-4146 FAX: 217-243-4149
IL DESIGN FIRM REGISTRATION NO. 184-000252

USER NAME = druholl	DESIGNED - DSR	REVISED -	
	DRAWN - RDS	REVISED -	
PLOT SCALE = $SCALE$	CHECKED - WJS	REVISED -	
PLOT DATE = 8/2/2024	DATE - AUGUST 2, 2024	REVISED -	

STATE OF ILLINOIS
DEPARTMENT OF TRANSPORTATION

REMOVAL PLANS
WHITE HEATH ROAD (OLD 47)

SCALE: | SHEET 3 OF 4 SHEETS | STA. 53+00.00 TO STA. 59+00.00

F.A.I RTE.	SECTION	COUNTY	TOTAL SHEETS	SHEET NO.
72	74-69BR	PIATT	78	21

CONTRACT NO. 70629

ILLINOIS | FED. AID PROJECT

LEGEND

- DENOTES TREE REMOVAL
- DENOTES PAVEMENT REMOVAL (FULL DEPTH)
- DENOTES HMA SURFACE REMOVAL, 1¾"
- DENOTES HMA SURFACE REMOVAL (BUTT JOINT)
- DENOTES HMA SHOULDER REMOVAL

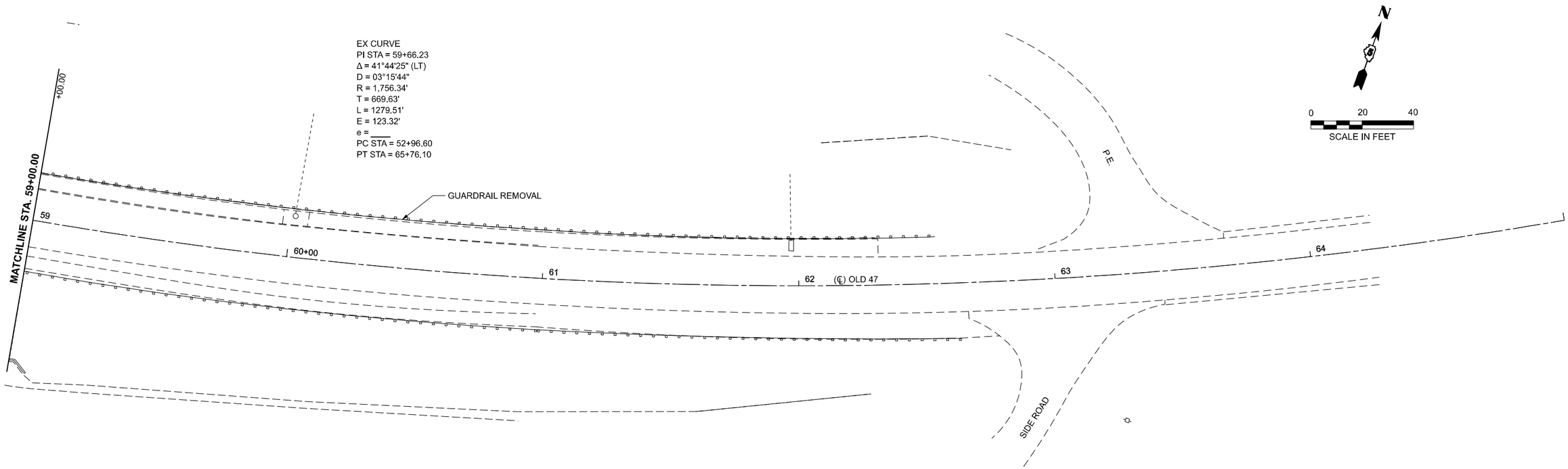

MODEL: White Heath R0-3 Sht
FILE NAME: P:\2E3703-3 - 70629 White Heath\70629 Section 74-69 BR\CADD Sheets\D570629-sht-removal.dgn

BENTON & ASSOCIATES, INC.
CONSULTING ENGINEERS / LAND SURVEYORS
1910 WEST LAFAYETTE AVE.
JACKSONVILLE, IL 62650
PHONE: 217-243-9149 FAX: 217-243-4149
IL DESIGN FIRM REGISTRATION NO. 184-000052

USER NAME = druholl	DESIGNED - DSR	REVISED -	
	DRAWN - RDS	REVISED -	
PLOT SCALE = $SCALE$	CHECKED - WJS	REVISED -	
PLOT DATE = 8/2/2024	DATE - AUGUST 2, 2024	REVISED -	

STATE OF ILLINOIS
DEPARTMENT OF TRANSPORTATION

REMOVAL PLANS
WHITE HEATH ROAD (OLD 47)

SCALE: | SHEET 4 OF 4 SHEETS | STA. 59+00.00 TO STA. 65+00.00

F.A.I RTE.	SECTION	COUNTY	TOTAL SHEETS	SHEET NO.
72	74-69BR	PIATT	78	22

CONTRACT NO. 70629

ILLINOIS | FED. AID PROJECT

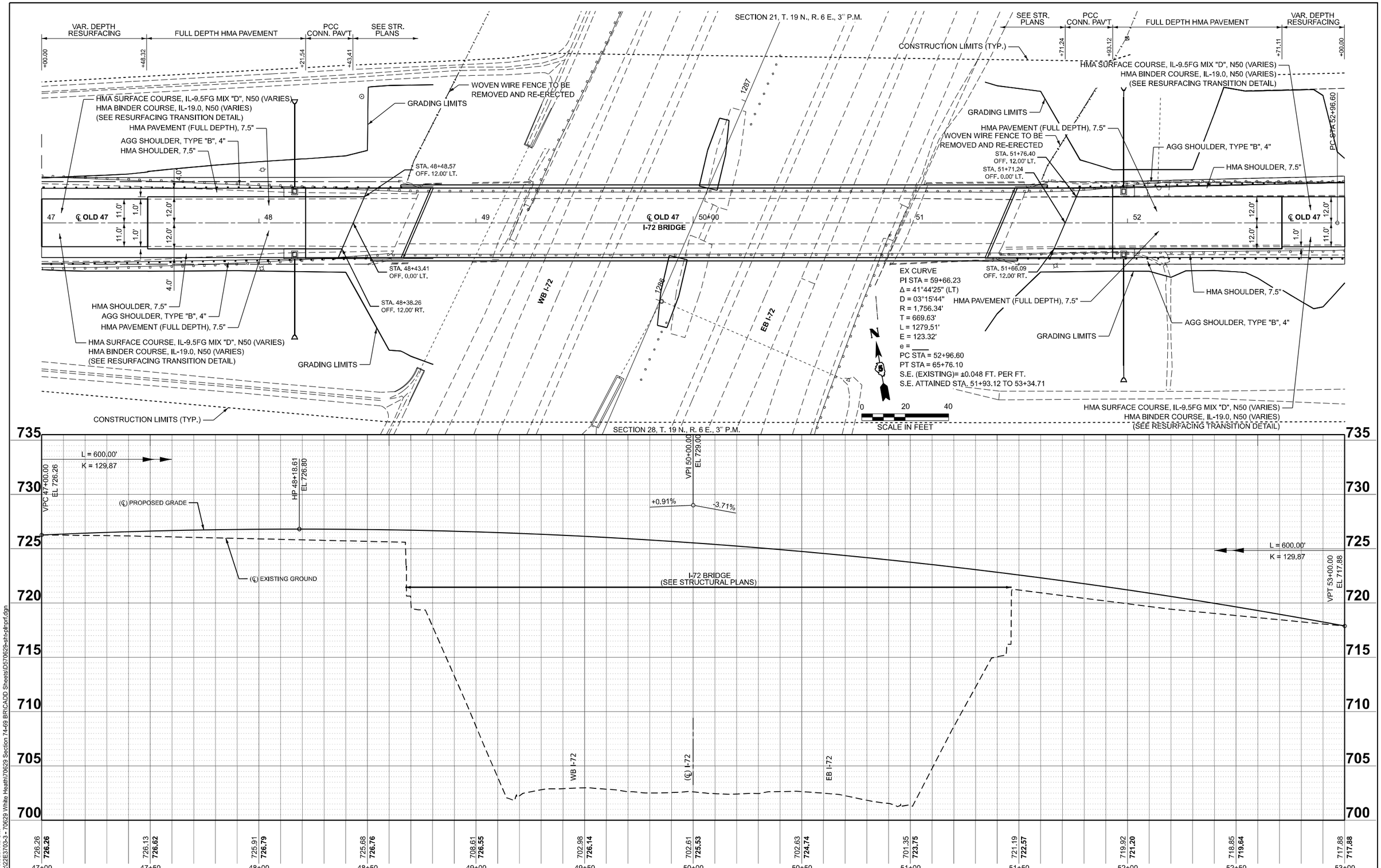

MODEL: White Heath Rd Sht
FILE NAME: P:\22E3703-3 - 70629 White Heath\70629 Section 74-69 BR\CADD Sheets\D570629-sht-pthprf.dgn

BENTON & ASSOCIATES, INC.
CONSULTING ENGINEERS / LAND SURVEYORS
1910 WEST LAFAYETTE AVE.
JACKSONVILLE, IL 62650
PHONE: 217-243-4146 FAX: 217-243-4149
IL DESIGN FIRM REGISTRATION NO. 184-000052

USER NAME = druholl	DESIGNED - DSR	REVISED -	
	DRAWN - DSR	REVISED -	
PLOT SCALE = $SCALE$	CHECKED - WJS	REVISED -	
PLOT DATE = 8/2/2024	DATE - AUGUST 2, 2024	REVISED -	

STATE OF ILLINOIS
DEPARTMENT OF TRANSPORTATION

PLAN AND PROFILE SHEET
(WHITE HEATH RD - SN 074-0088 OVER FAI 72)

SCALE: 1"=20' | SHEET 1 OF 1 SHEETS | STA. 47+00.00 TO STA. 53+00.00

F.A.I RTE.	SECTION	COUNTY	TOTAL SHEETS	SHEET NO.
72	74-69BR	PIATT	78	23

CONTRACT NO. 70629

ILLINOIS | FED. AID PROJECT

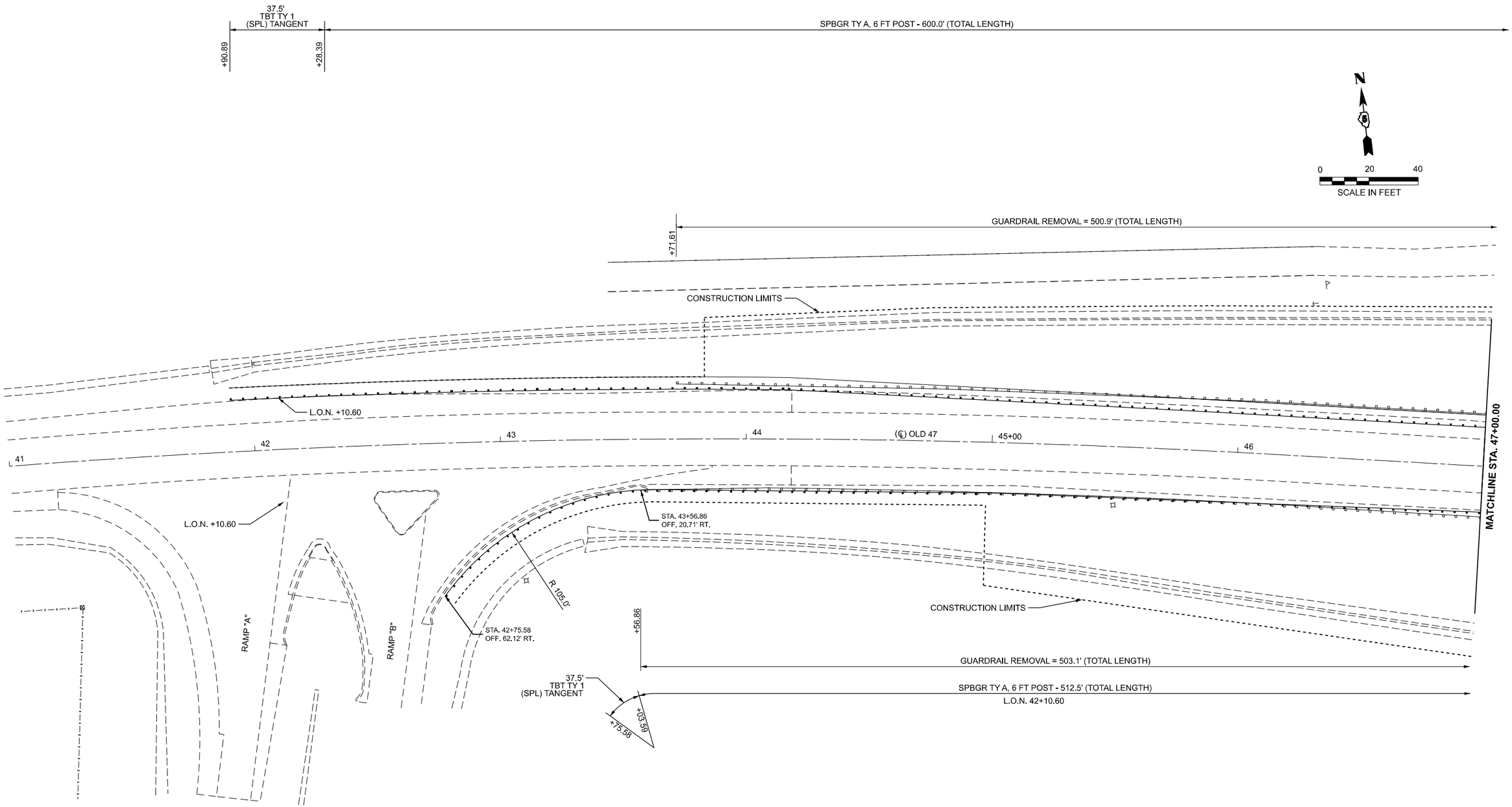

MODEL: OLD_47 - Ok47-Plan 1 [Sheet]
FILE NAME: P:\22E3703-3 - 70629 White Heath\70629 Section 74-69 BR\CADD Sheets\D570629-sht-Plan.dgn

BENTON & ASSOCIATES, INC.
CONSULTING ENGINEERS / LAND SURVEYORS
1900 WEST LAFAYETTE AVE.
JACKSONVILLE, IL 62650
PHONE: 217-245-5146 FAX: 217-245-1819
IL DESIGN FIRM REGISTRATION NO. 184-000052

USER NAME = druholl	DESIGNED - DSR	REVISED -	
	DRAWN - RDS	REVISED -	
PLOT SCALE = $SCALE$	CHECKED - WJS	REVISED -	
PLOT DATE = 8/2/2024	DATE - AUGUST 2, 2024	REVISED -	

STATE OF ILLINOIS
DEPARTMENT OF TRANSPORTATION

PLAN SHEET
WHITE HEATH ROAD (OLD 47)

SCALE: 1"=20' | SHEET 1 OF 4 SHEETS | STA. 41+00.00 TO STA. 47+00.00

F.A.I RTE.	SECTION	COUNTY	TOTAL SHEETS	SHEET NO.
72	74-69BR	PIATT	78	24

CONTRACT NO. 70629

ILLINOIS | FED. AID PROJECT

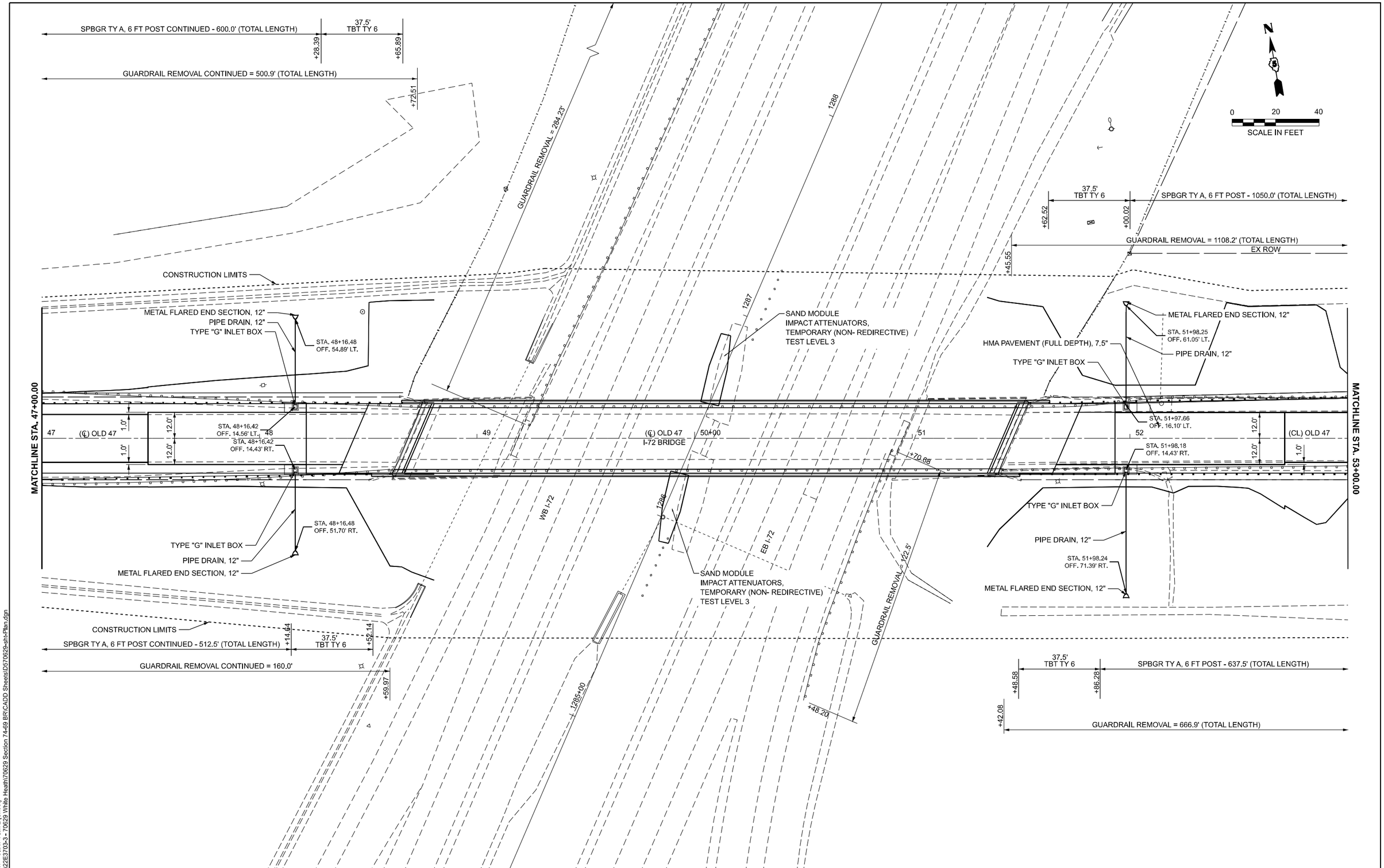

MODEL: OLD_47 - OK47-Plan 2 [Sheet]
FILE NAME: P:\22E3703-3 - 70629 White Heath\70629 Section 74-69 BR\CADD Sheets\D570629-sht-Plan.dgn

BENTON & ASSOCIATES, INC.
CONSULTING ENGINEERS / LAND SURVEYORS
1500 WEST LAFAYETTE AVE.
JACKSONVILLE, IL 62650
PHONE: 217-245-5146 FAX: 217-245-1819
IL DESIGN FIRM REGISTRATION NO. 184-000052

USER NAME = druholl	DESIGNED - DSR	REVISED -	
	DRAWN - RDS	REVISED -	
PLOT SCALE = $SCALE$	CHECKED - WJS	REVISED -	
PLOT DATE = 8/2/2024	DATE - AUGUST 2, 2024	REVISED -	

STATE OF ILLINOIS
DEPARTMENT OF TRANSPORTATION

PLAN SHEET
WHITE HEATH ROAD (OLD 47)

SCALE: 1"=20' | SHEET 2 OF 4 SHEETS | STA. 47+00.00 TO STA. 53+00.00

F.A.I RTE.	SECTION	COUNTY	TOTAL SHEETS	SHEET NO.
72	74-69BR	PIATT	78	25
		CONTRACT NO. 70629		
		ILLINOIS	FED. AID PROJECT	

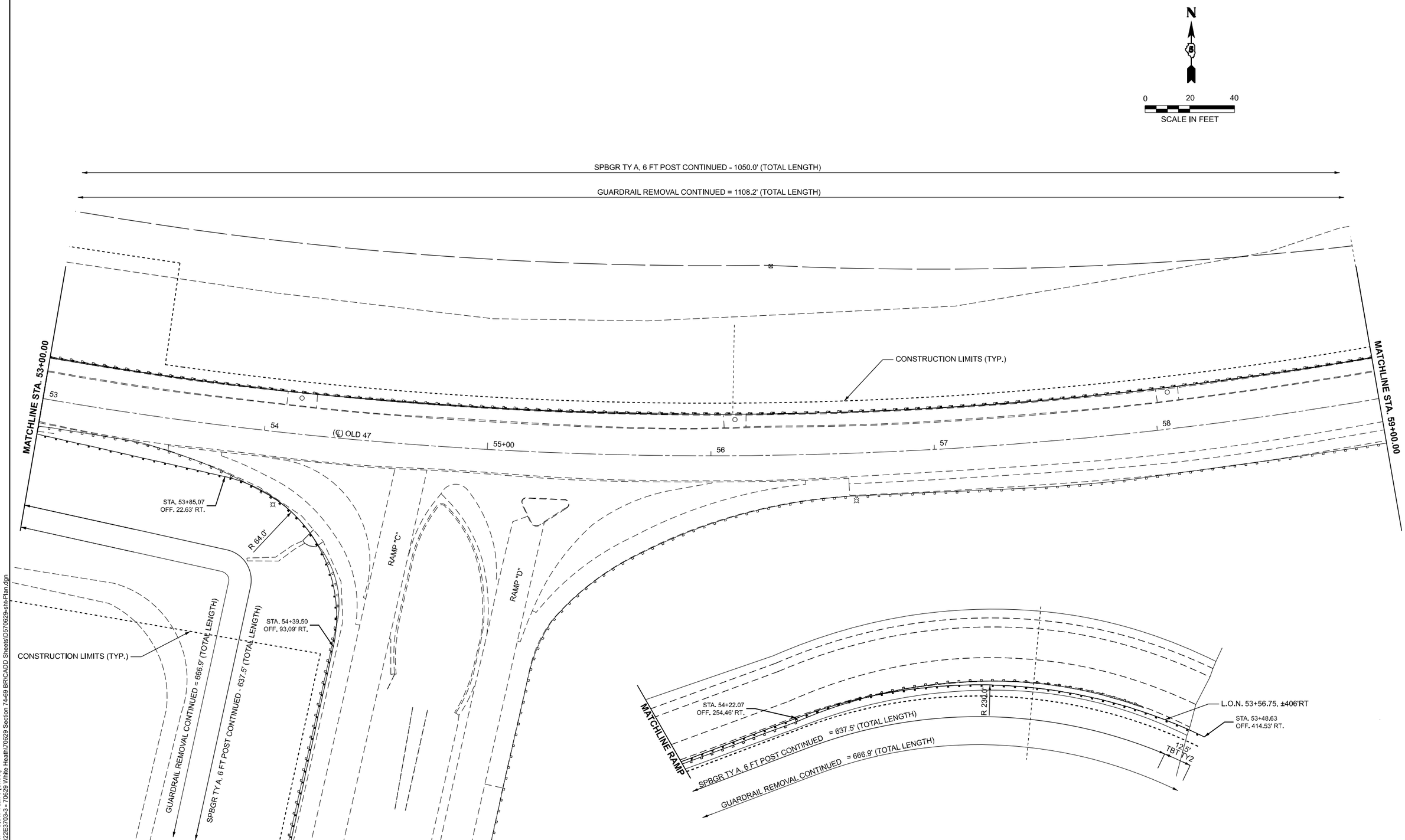

MODEL: OLD_47 - Ok447-Plan 3 [Sheet]
FILE NAME: P:\22E3703-3 - 70629 White Heath\70629 Section 74-69 BR\CADD Sheets\D570629-sht-Plan.dgn

BENTON & ASSOCIATES, INC.
CONSULTING ENGINEERS / LAND SURVEYORS
1900 WEST LAFAYETTE AVE.
JACKSONVILLE, IL 62650
PHONE: 217-245-5146 FAX: 217-245-1419
IL DESIGN FIRM REGISTRATION NO. 184-000052

USER NAME = druholl	DESIGNED - DSR	REVISED -	
	DRAWN - RDS	REVISED -	
PLOT SCALE = $SCALE$	CHECKED - WJS	REVISED -	
PLOT DATE = 8/2/2024	DATE - AUGUST 2, 2024	REVISED -	

STATE OF ILLINOIS
DEPARTMENT OF TRANSPORTATION

PLAN SHEET
WHITE HEATH ROAD (OLD 47)

SCALE: 1"=20' | SHEET 3 OF 4 SHEETS | STA. 53+00.00 TO STA. 59+00.00

F.A.I RTE.	SECTION	COUNTY	TOTAL SHEETS	SHEET NO.
72	74-69BR	PIATT	78	26
		CONTRACT NO. 70629		
	ILLINOIS	FED. AID PROJECT		

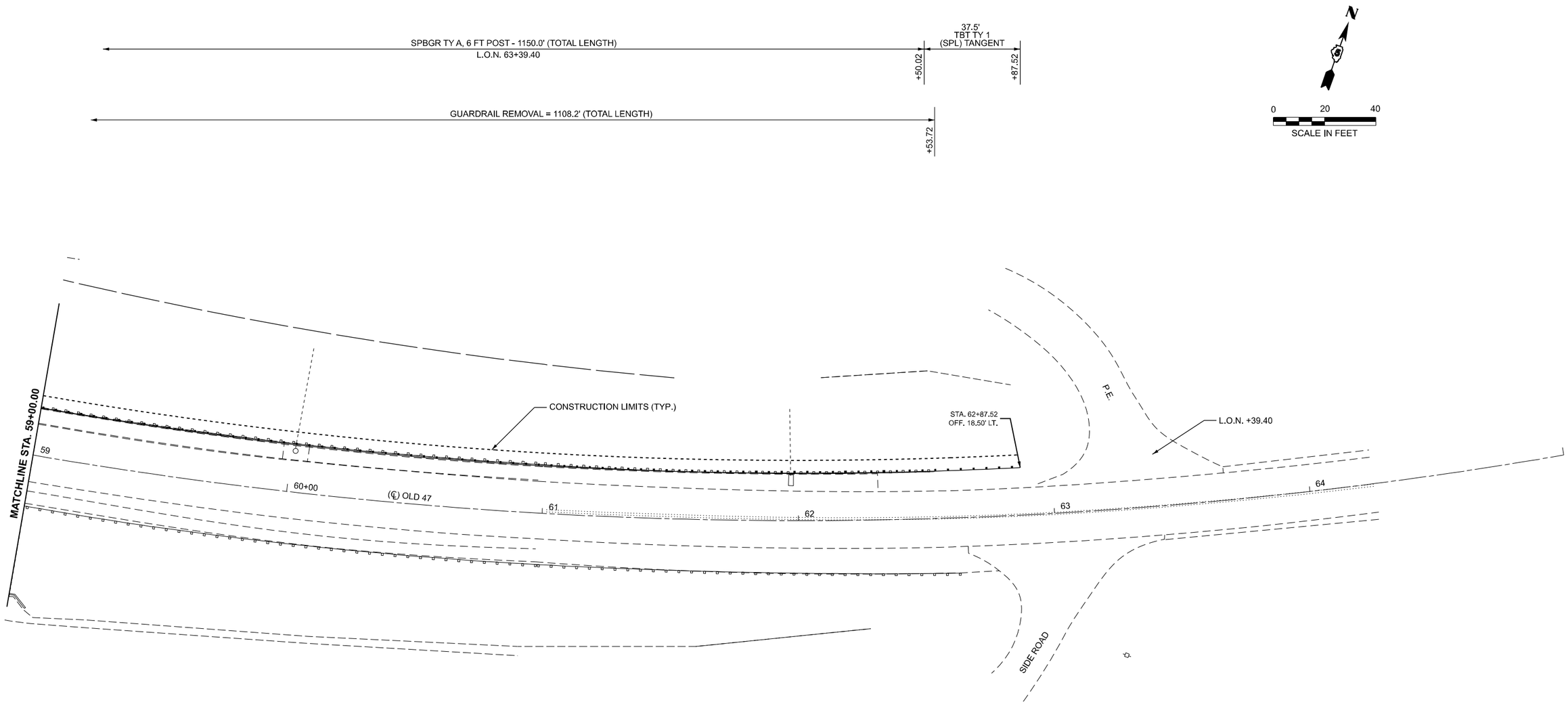

MODEL: OLD_47 - Ok447-Plan 4 [Sheet]
FILE NAME: P:\22E3703-3 - 70629 White Heath\70629 Section 74-69 BR\CADD Sheets\D570629-sht-Plan.dgn

BENTON & ASSOCIATES, INC.
CONSULTING ENGINEERS / LAND SURVEYORS
1970 WEST LAFAYETTE AVE.
JACKSONVILLE, IL 62650
PHONE: 217-245-5146 FAX: 217-245-5149
IL DESIGN FIRM REGISTRATION NO. 184-000052

USER NAME = druholl	DESIGNED - DSR	REVISED -	
	DRAWN - RDS	REVISED -	
PLOT SCALE = $SCALE$	CHECKED - WJS	REVISED -	
PLOT DATE = 8/2/2024	DATE - AUGUST 2, 2024	REVISED -	

STATE OF ILLINOIS
DEPARTMENT OF TRANSPORTATION

PLAN SHEET
WHITE HEATH ROAD (OLD 47)

SCALE: 1"=20' | SHEET 4 OF 4 SHEETS | STA. 59+00.00 TO STA. 65+00.00

F.A.I RTE.	SECTION	COUNTY	TOTAL SHEETS	SHEET NO.
72	74-69BR	PIATT	78	27

CONTRACT NO. 70629

ILLINOIS | FED. AID PROJECT

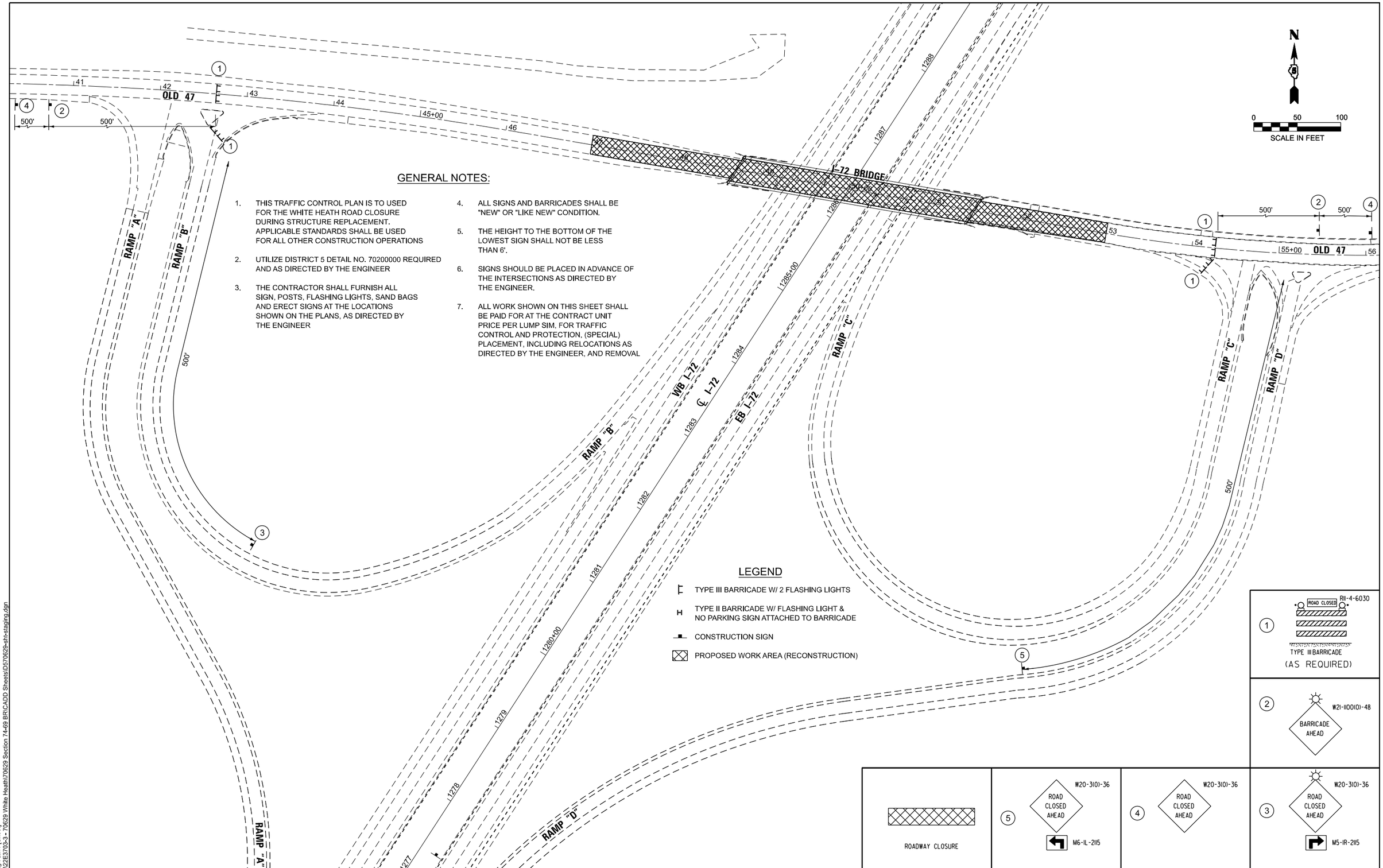

GENERAL NOTES:

1. THIS TRAFFIC CONTROL PLAN IS TO USED FOR THE WHITE HEATH ROAD CLOSURE DURING STRUCTURE REPLACEMENT. APPLICABLE STANDARDS SHALL BE USED FOR ALL OTHER CONSTRUCTION OPERATIONS
2. UTILIZE DISTRICT 5 DETAIL NO. 70200000 REQUIRED AND AS DIRECTED BY THE ENGINEER
3. THE CONTRACTOR SHALL FURNISH ALL SIGN, POSTS, FLASHING LIGHTS, SAND BAGS AND ERECT SIGNS AT THE LOCATIONS SHOWN ON THE PLANS, AS DIRECTED BY THE ENGINEER
4. ALL SIGNS AND BARRICADES SHALL BE "NEW" OR "LIKE NEW" CONDITION.
5. THE HEIGHT TO THE BOTTOM OF THE LOWEST SIGN SHALL NOT BE LESS THAN 6'.
6. SIGNS SHOULD BE PLACED IN ADVANCE OF THE INTERSECTIONS AS DIRECTED BY THE ENGINEER.
7. ALL WORK SHOWN ON THIS SHEET SHALL BE PAID FOR AT THE CONTRACT UNIT PRICE PER LUMP SIM, FOR TRAFFIC CONTROL AND PROTECTION, (SPECIAL) PLACEMENT, INCLUDING RELOCATIONS AS DIRECTED BY THE ENGINEER, AND REMOVAL

MODEL: Staging-Plan1 [Sheet]
FILE NAME: P:\22E3703-3 - 70629 White Heath\70629 Section 74-69 BR\CADD Sheets\D570629-sht-staging.dgn

BENTON & ASSOCIATES, INC.
CONSULTING ENGINEERS / LAND SURVEYORS
1970 WEST LAFAYETTE AVE.
MCKEESPORT, IL 62959
PHONE: 217-245-6148 FAX: 217-245-6149
IL DESIGN FIRM REGISTRATION NO. 184-000852

USER NAME = druholl	DESIGNED - DSR	REVISED -	STATE OF ILLINOIS DEPARTMENT OF TRANSPORTATION
	DRAWN - RDS	REVISED -	
PLOT SCALE = $SCALE$	CHECKED - WJS	REVISED -	
PLOT DATE = 8/2/2024	DATE - AUGUST 2, 2024	REVISED -	

SUGGESTED STAGES OF CONSTRUCTION AND TRAFFIC CONTROL PLAN
WHITE HEATH ROAD (OLD 47)

SCALE: | SHEET 1 OF 2 SHEETS | STA. TO STA.

F.A.I RTE.	SECTION	COUNTY	TOTAL SHEETS	SHEET NO.
72	74-69BR	PIATT	78	28
		CONTRACT NO. 70629		
	ILLINOIS	FED. AID PROJECT		

TOP VIEW

BARRIER WALL REFLECTORS

SIGN LEGEND

MINIMUM PAVEMENT WIDTH ALLOWED

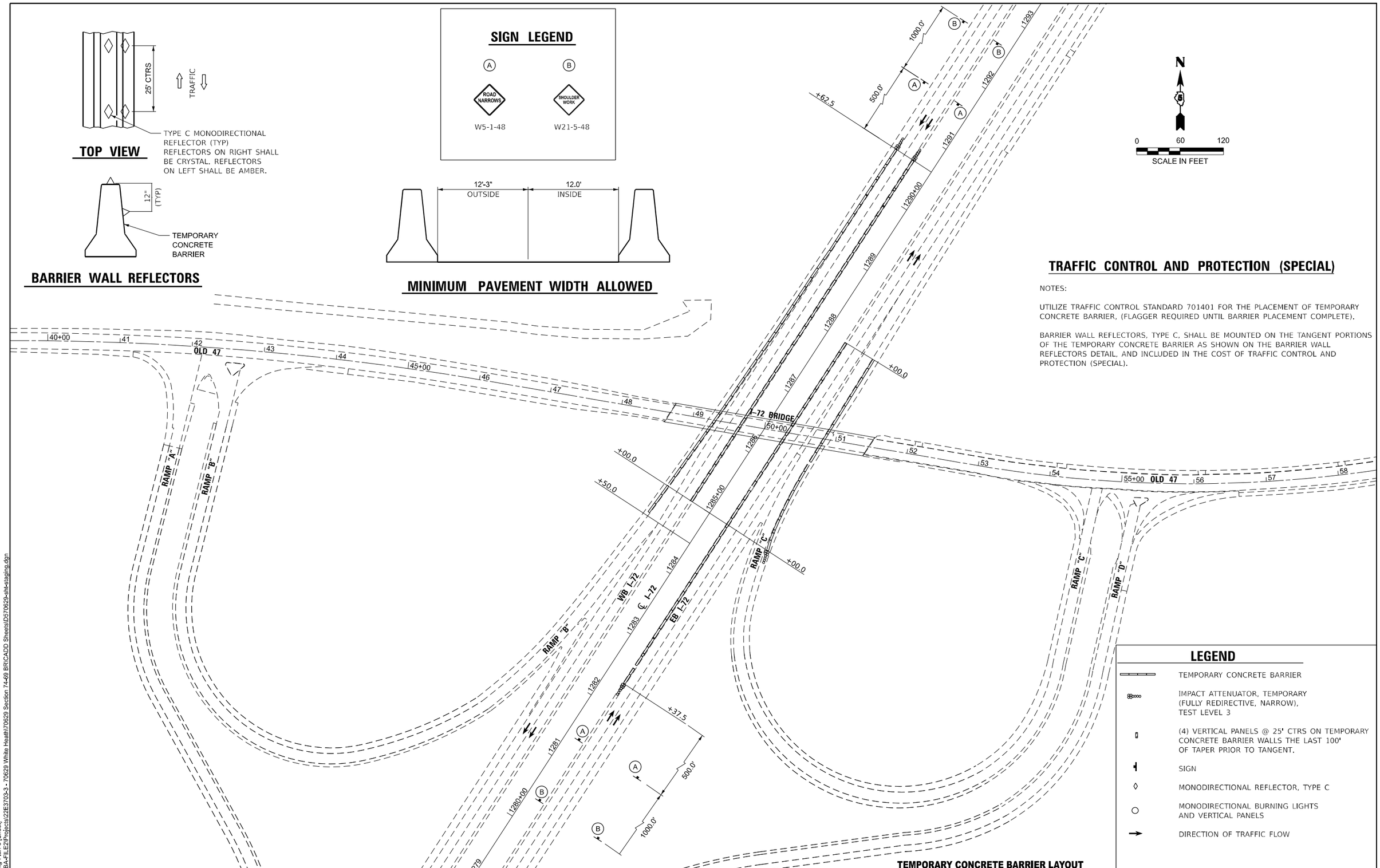

TRAFFIC CONTROL AND PROTECTION (SPECIAL)

NOTES:

UTILIZE TRAFFIC CONTROL STANDARD 701401 FOR THE PLACEMENT OF TEMPORARY CONCRETE BARRIER, (FLAGGER REQUIRED UNTIL BARRIER PLACEMENT COMPLETE).

BARRIER WALL REFLECTORS, TYPE C, SHALL BE MOUNTED ON THE TANGENT PORTIONS OF THE TEMPORARY CONCRETE BARRIER AS SHOWN ON THE BARRIER WALL REFLECTORS DETAIL, AND INCLUDED IN THE COST OF TRAFFIC CONTROL AND PROTECTION (SPECIAL).

LEGEND

- TEMPORARY CONCRETE BARRIER
- IMPACT ATTENUATOR, TEMPORARY (FULLY REDIRECTIVE, NARROW), TEST LEVEL 3
- (4) VERTICAL PANELS @ 25' CTRS ON TEMPORARY CONCRETE BARRIER WALLS THE LAST 100' OF TAPER PRIOR TO TANGENT.
- SIGN
- MONODIRECTIONAL REFLECTOR, TYPE C
- MONODIRECTIONAL BURNING LIGHTS AND VERTICAL PANELS
- DIRECTION OF TRAFFIC FLOW

TEMPORARY CONCRETE BARRIER LAYOUT

MODEL: Staging-Plan-3 [Sheet]
FILE NAME: \\BA-FILE2\Projects\22E3703-3 - 70629 White Heath\70629 Section 74-69 BR\CADD Sheets\D570629-sht-staging.dgn

BENTON & ASSOCIATES, INC.
CONSULTING ENGINEERS / LAND SURVEYORS
1900 WEST LAFAYETTE AVE.
MCKSVILLE, IL 62559
PHONE: 217-275-5196 FAX: 217-275-5199
IL DESIGN FIRM REGISTRATION NO. 184-000052

USER NAME = gsturgeon	DESIGNED - DSR	REVISED -	
	DRAWN - RDS	REVISED -	
PLOT SCALE = $SCALE$	CHECKED - WJS	REVISED -	
PLOT DATE = 8/1/2024	DATE - AUGUST 2, 2024	REVISED -	

STATE OF ILLINOIS
DEPARTMENT OF TRANSPORTATION

SUGGESTED STAGES OF CONSTRUCTION AND TRAFFIC CONTROL PLAN
WHITE HEATH ROAD (OLD 47)

SCALE: | SHEET 2 OF 2 SHEETS | STA. TO STA.

F.A.I RTE.	SECTION	COUNTY	TOTAL SHEETS	SHEET NO.
72	74-69BR	PIATT	78	29

CONTRACT NO. 70629

ILLINOIS | FED. AID PROJECT

EROSION AND SEDIMENT CONTROL

1. THE WORK DESCRIBED ON THESE DRAWINGS ARE THE INTEGRAL PART OF THE STORM WATER POLLUTION PREVENTION PLAN USED TO OBTAIN THE NPDES FROM IEPA FOR THE CONSTRUCTION OF THIS PROJECT.

2. THE PURPOSE OF THE EROSION AND SEDIMENT CONTROL MEASURES INCLUDED FOR THIS PROJECT IS TO LIMITS THE SEDIMENT POLLUTION IMPACT OF ANY STORM WATER DISCHARGES THAT ORIGINATE ON THIS SITE OR OFF-SITE FLOWS THAT FLOW OVER THE DISTURBED AREAS OR DOWNSTREAM AREAS. A COPY OF THE EROSION AND SEDIMENT CONTROL SCHEDULE BEING IMPLEMENTED BY THE CONTRACTOR WILL ON THE SITE AT ALL TIMES.

3. TO THE MAXIMUM EXTENT POSSIBLE. ALL FLOWS ORIGINATING OFF THE CONSTRUCTION SIDE WILL BE DIVERTED AROUND DISTURBED AREAS OR WILL BE CONVEYED TRHOUGH THE SIDE IN A MANNER THAT UNTREATED ON-SITE RUNOFF DOES NOT MIX WITH THE OFF-STE RUNOFF.

4. ALL RUNOFF ORIGINATING ON DISTURBED AREAS ASSOCIATED WITH THIS PROJECT WILL PASS THROUGH ONE OR MORE MREASURES THAT WILL MINIMIZE OFF-SITE SEDIMENT IMPACTS OF THE CONSTRUCTION ACTIVITY.

5. DISTURBED AREAS ARE TO BE PROTECTED FROM EROSION IN A TIMELY MANNER. UPON COMPLETION OF GRADING OF CONSTRUCTION, THE AREA WILL BE STABILIZED USING PERMANENT MEASRUES.

6. THE CONTRACTOR SHALL DESIGNATE ONE OF HIS EMPLOYEES AS RESPONSIBLE FOR IMPLEMENTATION OF THE EROSION AND SEDIMENT CONTROL PLAN ON ALL DISTURBED AREAS. THIS PERSON IS TO BE KNOWNLEDGEABLE ABOUT THE INSTALLATION AND MAINTENANCE OF THE REQUIERED MEASURED. THIS EMPLOYEE IS TO HAVE THE AUTHORITY TO CARRY OUT THE IMPLEMENTATION OF ANY INSTRUCTIONS CONCERNING THE EROSION AND SEDIMENT CONTROL PLAN GIVEN BY THE ENGINEER. ALL MEASURES WILL BE INSPECTED BY THE INDIVIDUAL AND THE ENGINEER ON A REGULAR BASIS (AT LEAST ONCE EVERY SEVEN DAYS) AND AFTER RAINFALL EVENTS GREATER THAN ½ INCH.

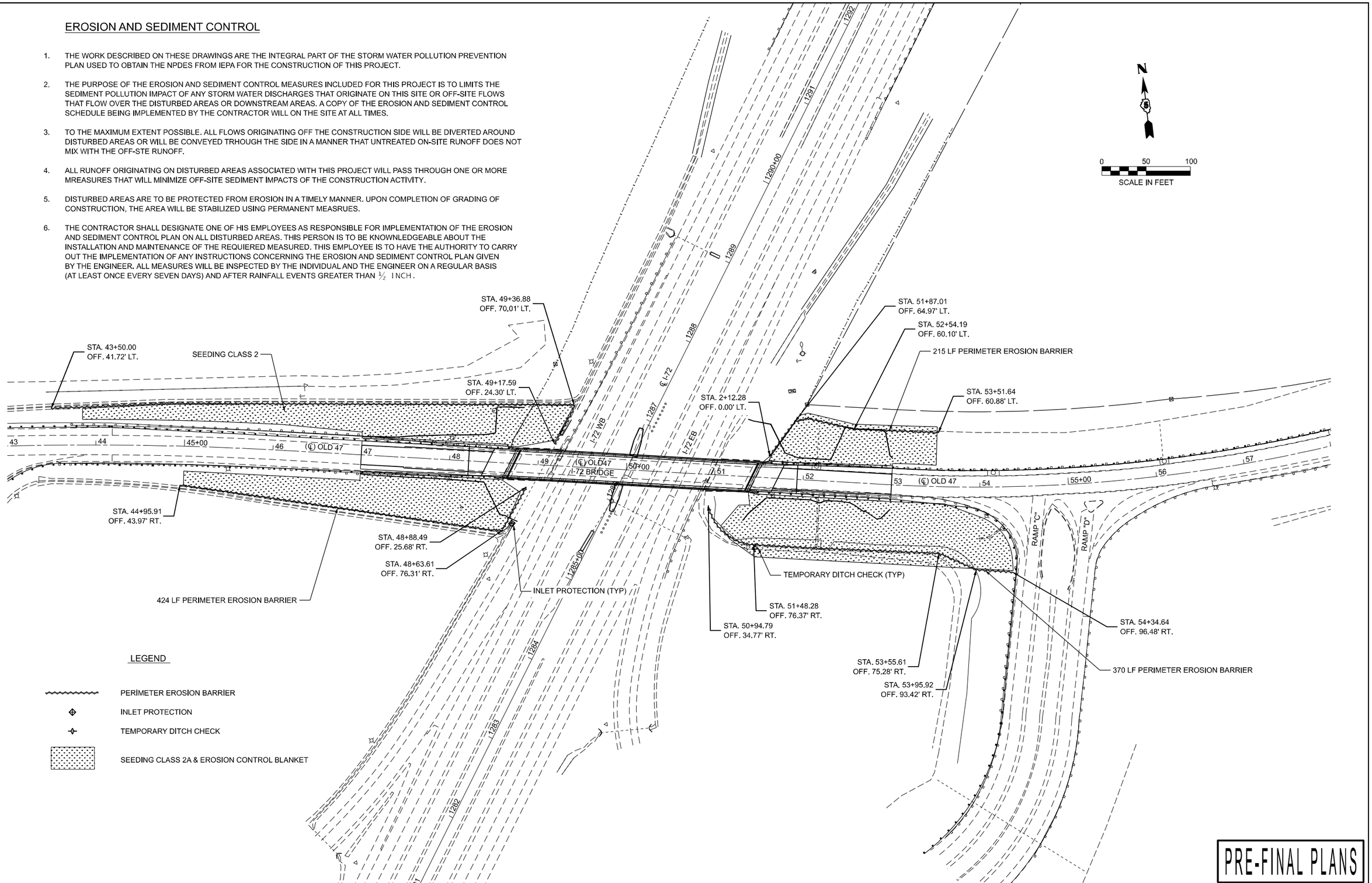

PRE-FINAL PLANS

MODEL: OLD_47 - old_47-Plan 1 [Sheet]
FILE NAME: P:\22E3703-3 - 70629 White Heath\70629 Section 74-69 BR\CADD Sheets\D570629-sht-EROS.dgn

BENTON & ASSOCIATES, INC. CONSULTING ENGINEERS / LAND SURVEYORS 1900 WEST LAFAYETTE AVE. JACKSONVILLE, IL 62650 PHONE: 217-245-5146 FAX: 217-245-5149 IL DESIGN FIRM REGISTRATION NO. 184-000052	USER NAME = druholl	DESIGNED - DSR	REVISED -	STATE OF ILLINOIS DEPARTMENT OF TRANSPORTATION	EROSION CONTROL PLAN WHITE HEATH ROAD (OLD 47)	F.A.I RTE. 72	SECTION 74-69BR	COUNTY PIATT	TOTAL SHEETS 78 / SHEET NO. 30
		DRAWN - RDS	REVISED -					CONTRACT NO. 70629	
	PLOT SCALE = $SCALE$	CHECKED - WJS	REVISED -						
	PLOT DATE = 7/30/2024	DATE - AUGUST 2, 2024	REVISED -		SCALE: 1"=50' SHEET 1 OF 1 SHEETS STA. 43+00.00 TO STA. 58+00.00		ILLINOIS	FED. AID PROJECT	

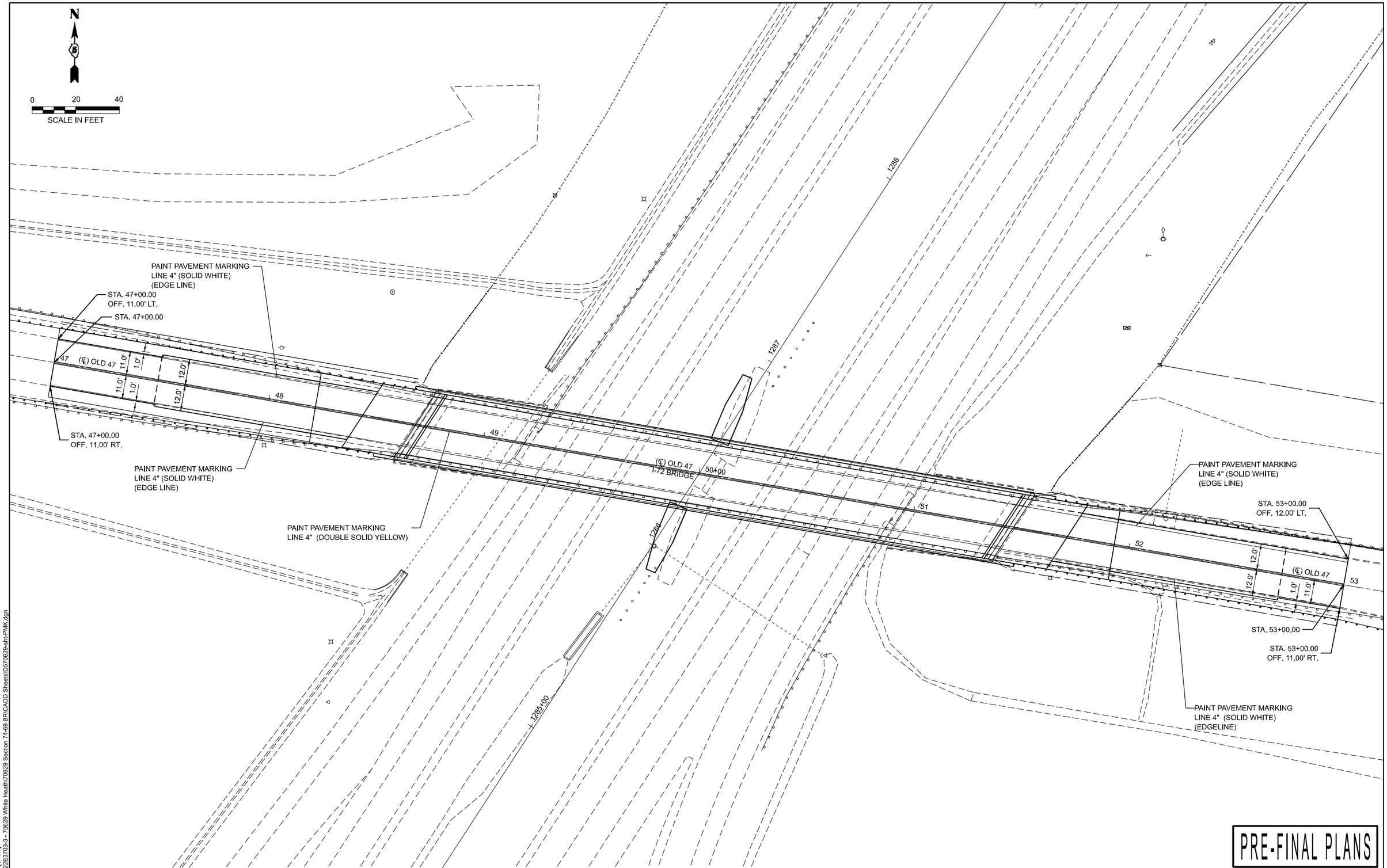

PRE-FINAL PLANS

MODEL: PMK-1 [Sheet]
FILE NAME: P:\22E3703-3 - 70629 White Heath\70629 Section 74-69 BR\CADD Sheets\D570629-sht-PMK.dgn

BENTON & ASSOCIATES, INC.
CONSULTING ENGINEERS / LAND SURVEYORS
1970 WEST LAFAYETTE AVE.
DECATUR, ILLINOIS
PHONE: 217-875-6146 FAX: 217-875-1819
IL DESIGN FIRM REGISTRATION NO. 184-000052

USER NAME = druholl	DESIGNED - DSR	REVISED -
	DRAWN - RDS	REVISED -
PLOT SCALE = $SCALE$	CHECKED - WJS	REVISED -
PLOT DATE = 7/30/2024	DATE - AUGUST 2, 2024	REVISED -

STATE OF ILLINOIS
DEPARTMENT OF TRANSPORTATION

PAVEMENT MARKING PLAN SHEET
WHITE HEATH ROAD (OLD 47)

SCALE: SHEET 1 OF 1 SHEETS STA. TO STA.

F.A.I RTE.	SECTION	COUNTY	TOTAL SHEETS	SHEET NO.
72	74-69BR	PIATT	78	31
		CONTRACT NO. 70629		
	ILLINOIS	FED. AID PROJECT		

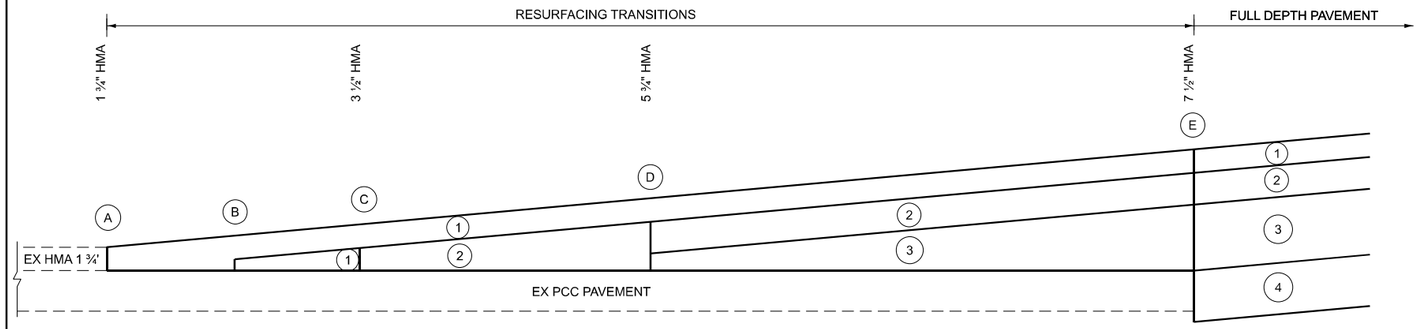

LEGEND

1. POLYMERIZED HOT-MIX ASPHALT SURFACE COURSE, IL-9.5 FG, MIX "D", N50
2. HOT-MIX ASPHALT BINDER COURSE, IL - 19.0, N50
3. POLYMERIZED HOT-MIX ASPHALT BINDER COURSE, IL - 19.0, N50
4. AGGREGATE SUBGRADE IMPROVEMENT 12"

A POLYMERIZED HOT-MIX ASPHALT SURFACE COURSE, IL-9.5 FG, MIX "D", N50 (1 ¾")
STA. 47+00
STA. 53+00

B BEGIN 2ND LIFT POLYMERIZED HOT-MIX ASPALT SURFACE COURSE (1.0" MIN.)
STA. 47+03.69
STA. 52.97.73

C POLYMERIZED HOT-MIX ASPHALT SURFACE COURSE, IL-9.5 FG, MIX "D", N50 (1 ¼")
POLYMERIZED HOT-MIX ASPHALT BINDER COURSE, IL - 19.0, N50 (2 ¼)
STA. 47+13.71
STA. 52+91.65

D POLYMERIZED HOT-MIX ASPHALT SURFACE COURSE, IL-9.5 FG, MIX "D", N50 (1 ¼")
POLYMERIZED HOT-MIX ASPHALT BINDER COURSE, IL - 19.0, N50 (2 ¼")
HOT-MIX ASPHALT BINDER COURSE, IL - 19.0, N50 (2 ¼)
STA. 47+34.05
STA. 52+71.11

E POLYMERIZED HOT-MIX ASPHALT SURFACE COURSE, IL-9.5 FG, MIX "D", N50 (1 ¼")
POLYMERIZED HOT-MIX ASPHALT BINDER COURSE, IL - 19.0, N50 (2 ¼")
HOT-MIX ASPHALT BINDER COURSE, IL - 19.0, N50 (4")
AGGREGATE SUBGRADE IMPROVEMENT (12")
STA. 47+48.32
STA. 51+93.21

RESURFACING TRANSITION DETAIL

NOT TO SCALE

MODEL: Details-1 [Sheet]
FILE NAME: P:\22E3703-3 - 70629 White Heath\70629 Section 74-69 BR\CADD Sheets\D570629-sht-Details.dgn

BENTON & ASSOCIATES, INC.
CONSULTING ENGINEERS / LAND SURVEYORS
1970 WEST LAFAYETTE AVE.
MCLEANSBORO, IL 62859
PHONE: 217-215-4146 FAX: 217-215-1119
IL DESIGN FIRM REGISTRATION NO. 184-000052

USER NAME = druholl	DESIGNED - DSR	REVISED -	STATE OF ILLINOIS DEPARTMENT OF TRANSPORTATION
	DRAWN - DSR	REVISED -	
PLOT SCALE = $SCALE$	CHECKED - WJS	REVISED -	
PLOT DATE = 8/2/2024	DATE - AUGUST 2, 2024	REVISED -	

CONSTRUCTION DETAILS
WHITE HEATH ROAD (OLD 47)

SCALE: | SHEET 1 OF 2 SHEETS | STA. TO STA.

F.A.I RTE.	SECTION	COUNTY	TOTAL SHEETS	SHEET NO.
72	74-69BR	PIATT	78	32

CONTRACT NO. 70629

ILLINOIS | FED. AID PROJECT

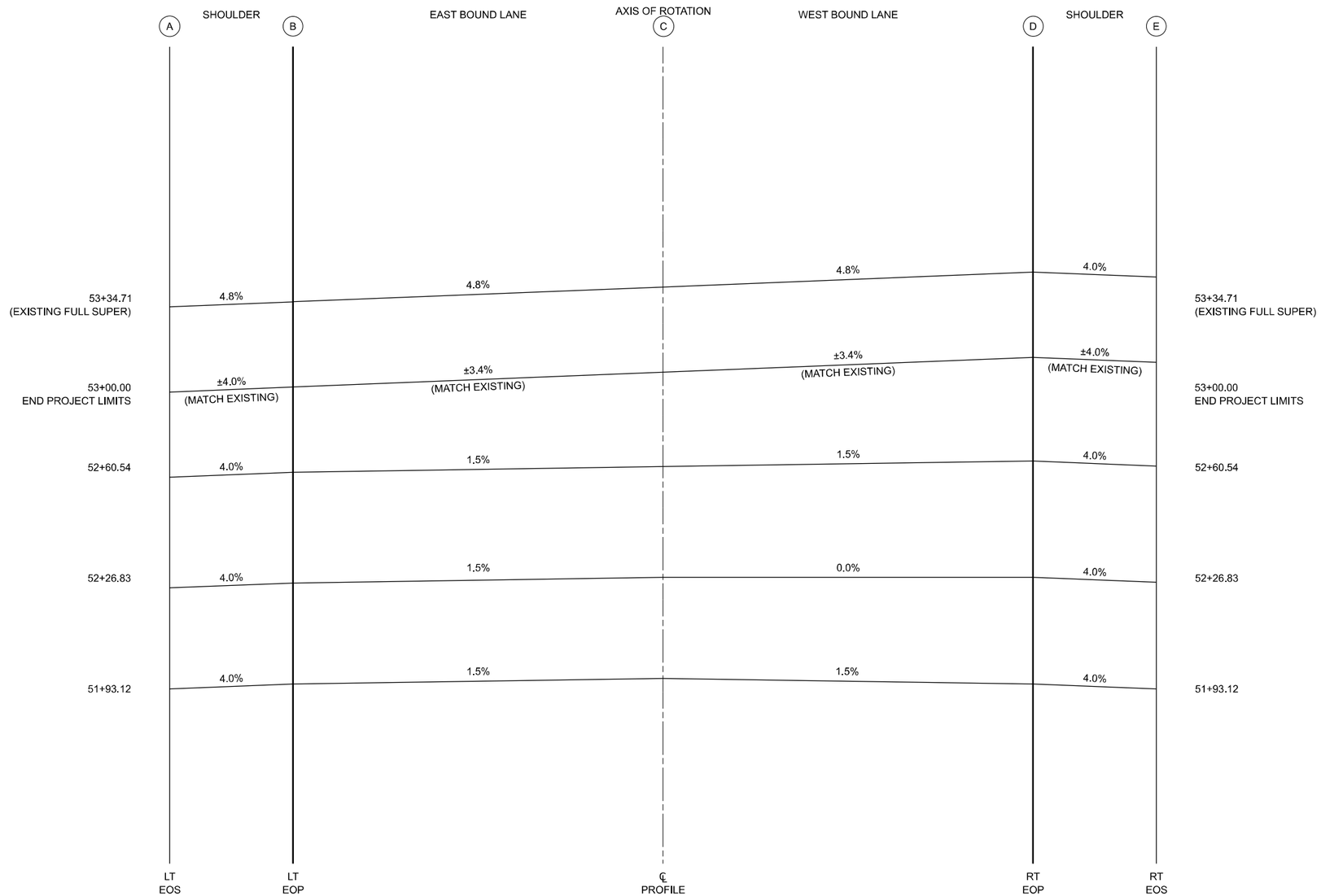

STA.	DESIGN ELEVATIONS AND OFFSETS									
	A		B		C		D		E	
	OFFSET	ELEV.	OFFSET	ELEV.	OFFSET	ELEV.	OFFSET	ELEV.	OFFSET	ELEV.
51+93.12	16.00' LT	721.06	12.00' LT	721.22	0.00' RT	721.40	12.00' RT	721.22	16.00' RT	721.06
52+26.83	16.79' LT	720.02	12.00' LT	720.21	0.00' RT	720.39	12.00' RT	720.39	16.00' RT	720.27
52+60.54	17.58' LT	718.88	12.00' LT	719.10	0.00' RT	719.23	12.00' RT	719.46	16.00' RT	719.30
53+00.00	18.50' LT	±717.23	12.00' LT	±717.62	0.00' RT	±717.88	10.34' RT	±718.03	16.00' RT	±717.52

MATCH EXISTING PAVEMENT GRADES AND ELEVATIONS AT STA. 53+00.00

SUPER ELEVATION TRANSITION SECTIONS - WHITE HEATH RD (OLD 47)

MODEL: Super [Sheet]
FILE NAME: P:\22E3703-3 - 70629 White Heath\70629 Section 74-69 BR\CADD Sheets\D570629-sht-Details.dgn

BENTON & ASSOCIATES, INC.
CONSULTING ENGINEERS / LAND SURVEYORS
1970 WEST LAFAYETTE AVE.
MOMENCE, ILLINOIS 60954
PHONE: 217-295-6196 FAX: 217-295-6199
IL DESIGN FIRM REGISTRATION NO. 184-000052

USER NAME = druholl	DESIGNED - DSR	REVISED -	
	DRAWN - RDS	REVISED -	
PLOT SCALE = $SCALE$	CHECKED - WJS	REVISED -	
PLOT DATE = 7/30/2024	DATE - AUGUST 2, 2024	REVISED -	

STATE OF ILLINOIS
DEPARTMENT OF TRANSPORTATION

CONSTRUCTION DETAILS - SUPER ELEVATION TRANSITION
WHITE HEATH ROAD (OLD 47)

SCALE: | SHEET 2 OF 2 SHEETS | STA. TO STA.

F.A.I RTE.	SECTION	COUNTY	TOTAL SHEETS	SHEET NO.
72	74-69BR	PIATT	78	33
		CONTRACT NO. 70629		
	ILLINOIS	FED. AID PROJECT		

ROAD CLOSURE

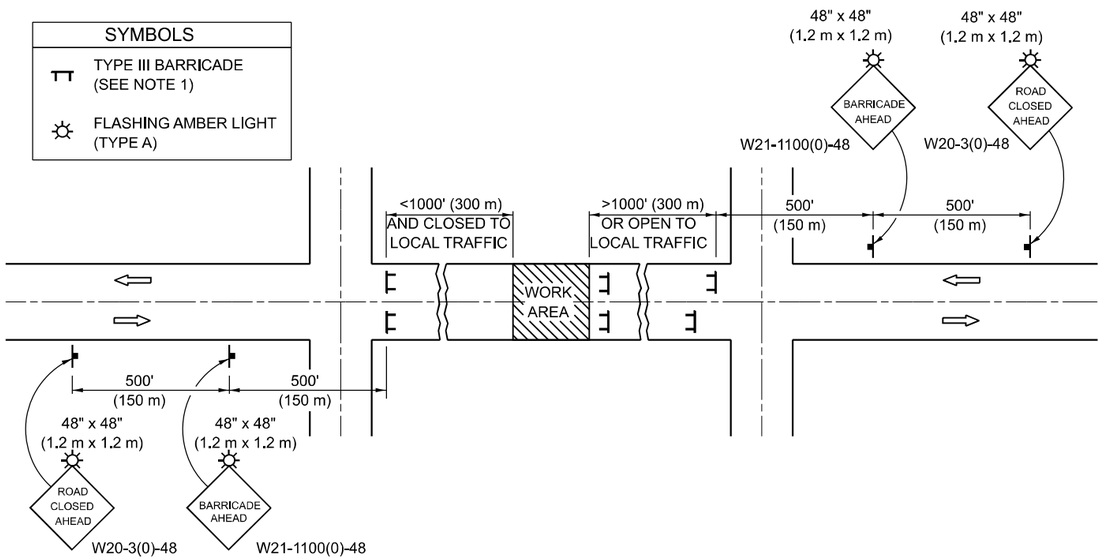

GENERAL NOTES

1. TYPE III BARRICADES SHALL BE AS SHOWN ON STANDARD 701901 "TYPICAL APPLICATIONS OF TYPE III BARRICADES CLOSING A ROAD". EACH TYPE III BARRICADE SHALL HAVE TWO FLASHING AMBER LIGHTS MOUNTED ABOVE IT.
2. IF THE ROAD IS OPEN TO LOCAL TRAFFIC OR EXCEEDS 1000' (300 m), ANOTHER SET OF TYPE III BARRICADES, EQUIPPED AS IN NOTE 1 ABOVE, SHALL BE PLACED AT EACH END OF THE WORK AREA.
3. WHEN A STOP CONDITION EXISTS, NO SIGNS ARE REQUIRED IN ADVANCE OF THE "STOP" SIGN WHEN THE ROAD IS CLOSED WITHIN 100' (30 m) OF THE INTERSECTION.
4. STANDARD 701901 SHALL APPLY FOR THE PLACEMENT & DESIGN OF TYPE III BARRICADES.
5. IF A TYPE III BARRICADE WITH AN ATTACHED SIGN PANEL WHICH MEETS NCHRP 350 IS NOT AVAILABLE, THE SIGNS MAY BE MOUNTED ON AN NCHRP 350 TEMPORARY SIGN SUPPORT DIRECTLY IN FRONT OF THE BARRICADE.
6. REFLECTORIZED STRIPING SHALL APPEAR ON BOTH SIDES OF THE TY III BARRICADES IF ROAD IS OPEN TO LOCAL TRAFFIC.
7. ALL SIGNS SHALL BE POST MOUNTED IF THE CLOSURE TIME EXCEEDS FOUR DAYS.
8. A MINIMUM OF TWO FLASHING LIGHTS SHALL BE USED AT NIGHT ON EACH APPROACH IN ADVANCE OF THE WORK AREA. FLASHING LIGHTS SHALL BE INSTALLED ABOVE THE FIRST TWO SIGNS IN THE SERIES.
9. LONGITUDINAL DIMENSIONS MAY BE ADJUSTED SLIGHTLY TO FIT FIELD CONDITIONS.
10. FORMS BT. 725 AND BT. 726 ARE REQUIRED.
11. WHEN A SIDEROAD INTERSECTS THE HIGHWAY ON WHICH WORK IS BEING PERFORMED, ADDITIONAL TRAFFIC DEVICES SHALL BE ERECTED AND PROVIDED AS DIRECTED BY THE ENGINEER.
12. AN ADDITIONAL SIGN MAY BE REQUIRED AT A MAJOR INTERSECTING ROAD IN ADVANCE OF THE CLOSURE. THE ADDITIONAL SIGN SHALL GIVE THE DISTANCE TO THE BARRICADE IN MILES OR FRACTIONS OF A MILE.

SIDEROAD / STREET CLOSURE

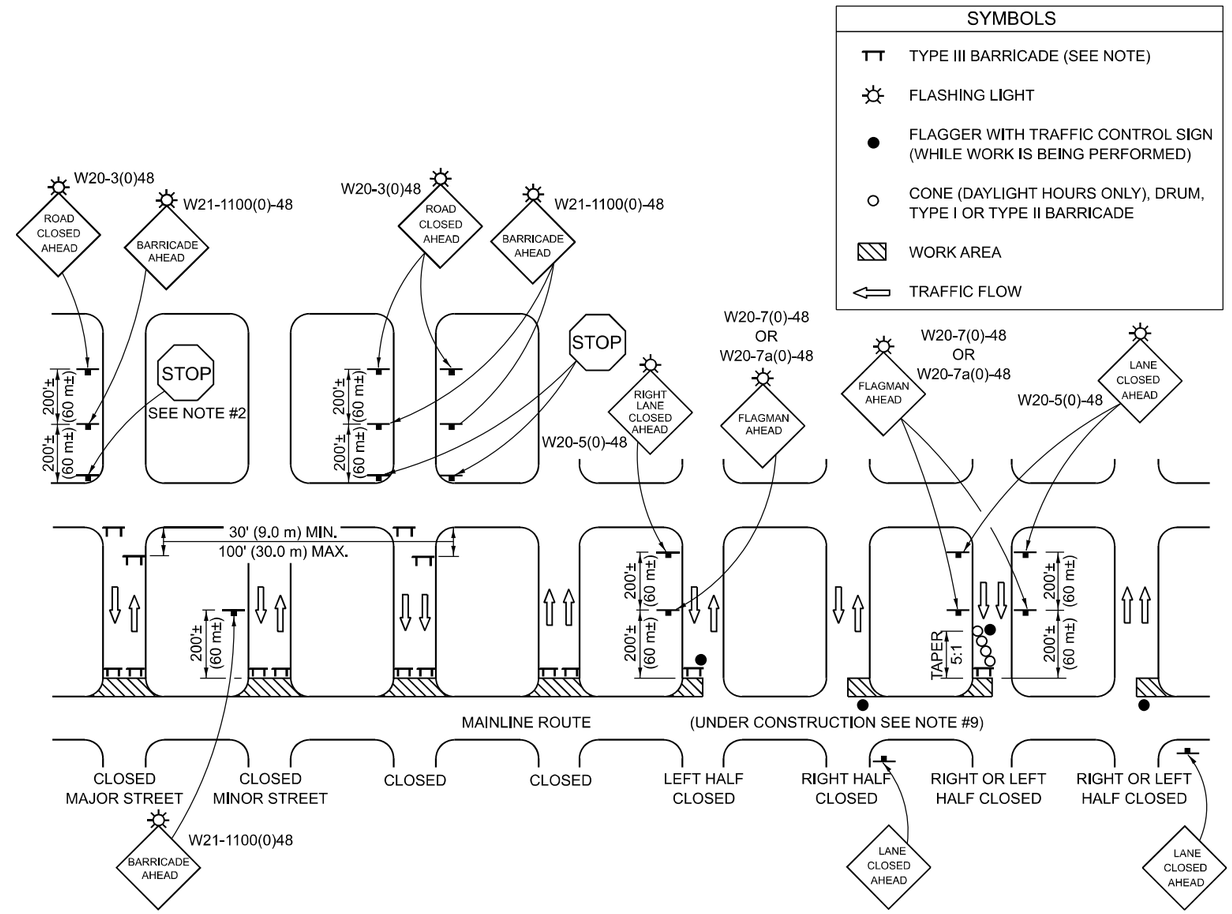

GENERAL NOTES

1. TYPE III BARRICADES SHALL BE AS SHOWN ON "TYPICAL APPLICATIONS OF TYPE III BARRICADES CLOSING A ROAD". EACH TYPE III BARRICADE SHALL HAVE TWO FLASHING AMBER LIGHTS MOUNTED ABOVE IT.
2. WHERE A STOP CONDITION EXISTS, AS SHOWN ABOVE, WARNING SIGNS MAY BE OMITTED IN ADVANCE OF THE "STOP" SIGN.
3. STANDARD 701901 SHALL APPLY FOR THE PLACEMENT & MANUFACTURE OF TYPE III BARRICADES.
4. ALL SIGNS SHALL BE POST MOUNTED IF THE CLOSURE TIME EXCEEDS FOUR DAYS.
5. ONE FLASHING LIGHT IS REQUIRED ABOVE EACH ADVANCE WARNING SIGN DURING HOURS OF DARKNESS.
6. LONGITUDINAL DIMENSIONS MAY BE ADJUSTED SLIGHTLY TO FIT FIELD CONDITIONS.
7. FORMS BT 725 AND BT 726 ARE REQUIRED.
8. THE MAINLINE ROUTE TEMPORARY TRAFFIC CONTROL SHALL BE IN ACCORDANCE WITH THE PLANS, SPECIAL PROVISIONS AND STANDARD SPECIFICATIONS.
9. ALL FLAGGERS REQUIRED AT SIDE ROADS AND ENTRANCES REMAINING OPEN TO TRAFFIC AND/OR ADDITIONAL BARRICADES REQUIRED BY THE ENGINEER TO CLOSE SIDE ROADS AND ENTRANCES WILL BE PAID FOR ACCORDING TO ARTICLE 109.04.

Note: All dimensions are in INCHES (millimeters) unless otherwise shown.

DISTRICT 5 DETAIL NO. 70200000

USER NAME = druholl	DESIGNED -	REVISED -	
	DRAWN - D5	REVISED -	
PLOT SCALE = $SCALE$	CHECKED -	REVISED -	
PLOT DATE = 7/30/2024	DATE -	REVISED -	

STATE OF ILLINOIS
DEPARTMENT OF TRANSPORTATION

TRAFFIC CONTROL & PROTECTION DEVICES
(ROAD & SIDEROAD / STREET CLOSURES)

SCALE: | SHEET 1 OF 5 SHEETS | STA. TO STA.

F.A.I RTE.	SECTION	COUNTY	TOTAL SHEETS	SHEET NO.
72	74-69BR	PIATT	78	34

CONTRACT NO. 70629

ILLINOIS | FED. AID PROJECT

MODEL: 70200000 [Sheet]
FILE NAME: P:\22E3703-3 - 70629 White Heath\70629 Section 74-69 BR\CADD Sheets\D570629-sht-District_Details.dgn

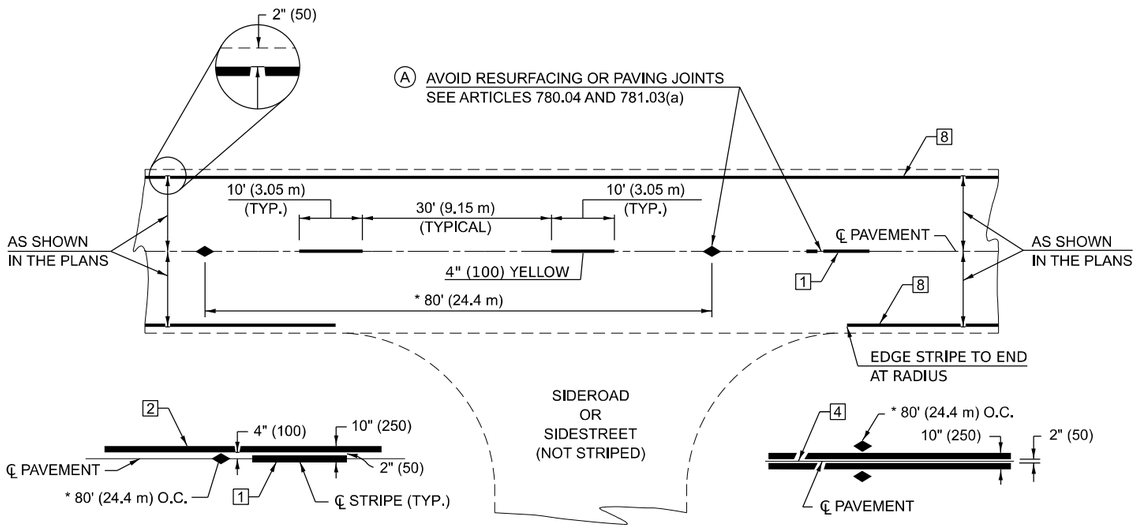

SINGLE NO PASSING

DOUBLE NO PASSING

* REDUCE TO 40' (12.2 m) O.C. ON CURVES WITH POSTED OR ADVISORY SPEEDS OF 45 mph (70 km/h) OR LESS.

TWO LANE/TWO WAY

TYPICAL PAVEMENT MARKING LENGEND

1 4" (100) SKIP-DASH (YELLOW)

2 4" (100) SOLID (YELLOW)

3 12" (300) DIAGONAL (YELLOW)

4 4" (100) DOUBLE YELLOW (NARROW)

5 RESERVED

6 RESERVED

7 4" (100) SKIP-DASH (WHITE)

8 4" (100) SOLID (WHITE)

9 12" (300) DIAGONAL (WHITE)

10 6" (150) SOLID (WHITE)

11 24" (600) STOP BAR (WHITE)

12 8" (200) SOLID (WHITE)

13 4" (100) LANE LINE EXTENSIONS (WHITE)

14 4" (100) PARKING WHITE

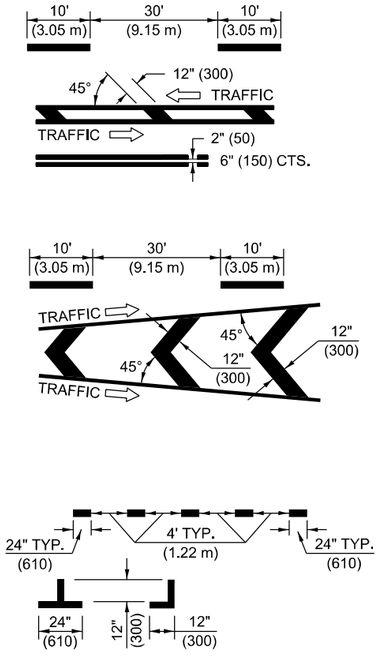

TYPICAL PAVEMENT MARKERS LENGEND

◆ TWO-WAY AMBER MARKER

▶ ONE-WAY AMBER MARKER

▷ ONE-WAY CRYSTAL MARKER

RURAL LEFT TURN

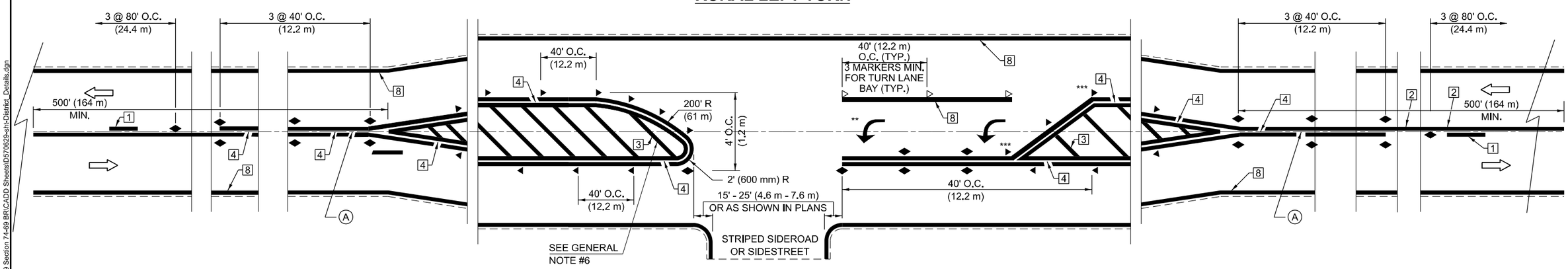

*** REDUCE SPACING IF NECESSARY TO ASSURE MARKERS AT CORNER POINTS.

** TURN ARROWS SHALL BE PLACED AS SHOWN OF SHEET #2.

Note: All dimensions are in INCHES (millimeters) unless otherwise shown.

DISTRICT 5 DETAIL NO. 7800AAAA

F.A.I RTE.	SECTION	COUNTY	TOTAL SHEETS	SHEET NO.
72	74-69BR	PIATT	78	35
		CONTRACT NO. 70629		
		ILLINOIS	FED. AID PROJECT	

USER NAME = druholl	DESIGNED -	REVISED -	
	DRAWN - D5	REVISED -	
PLOT SCALE = $SCALE$	CHECKED -	REVISED -	
PLOT DATE = 7/30/2024	DATE -	REVISED -	

STATE OF ILLINOIS
DEPARTMENT OF TRANSPORTATION

PAVEMENT MARKING AND MARKERS
(RURAL & URBAN APPLICATIONS)

SCALE: SHEET 2 OF 5 SHEETS STA. TO STA.

MODEL: 7800AAA-1 [Sheet]
FILE NAME: P:\22E3703-3 - 70629 White Heath\70629 Section 74-69 BR\CADD Sheets\D570629-sht-District Details.dgn

URBAN LEFT TURN

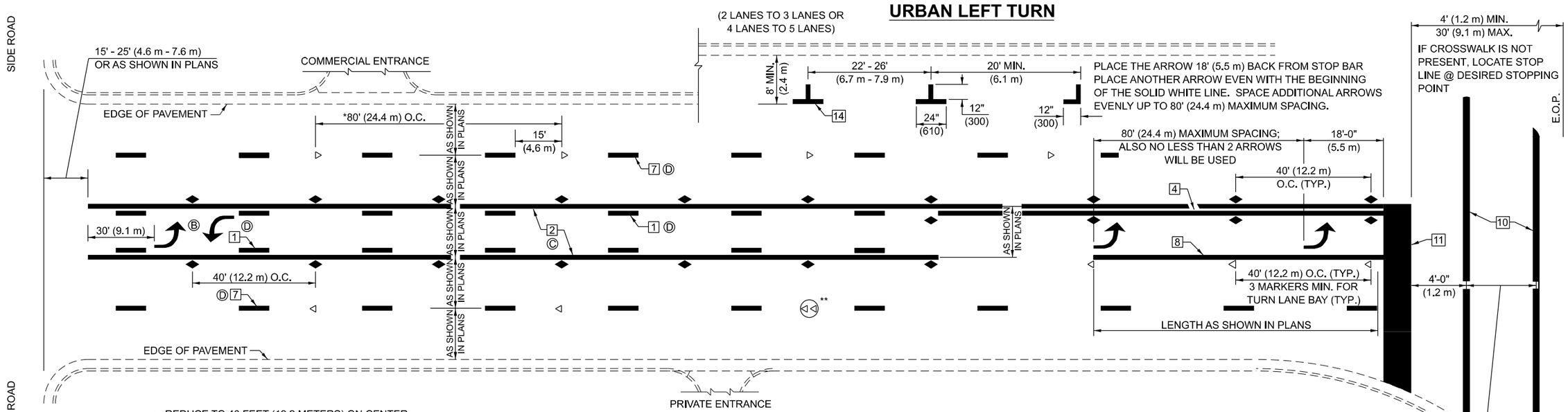

* REDUCE TO 40 FEET (12.2 METERS) ON CENTER ON CURVES WHERE ADVISORY SPEEDS ARE 10 MPH (15 km/h) LOWER THAN POSTED SPEEDS.

** DOUBLE LANE LINE MARKERS SHALL BE SPECIFIED AND SPACED AS SHOWN IN HIGHWAY STANDARD 781001 FOR MULTI-LANE DIVIDED AND UNDIVIDED HIGHWAYS.

BLOOMINGTON-NORMAL CITY LIMITS ONLY

GENERAL NOTES:

Ⓑ TURN ARROW PAIRS SHALL BE PLACED AT 250' (75 m) INTERVALS AND SHALL BE EVENLY SPACED BETWEEN BOTH ENDS OF THE BIDIRECTIONAL LEFT TURN LANE.

Ⓒ THE SOLID YELLOW PAVEMENT MARKINGS 2 SHOULD GENERALLY START OR END NEAR THE RADIUS POINT OF EACH STREET RETURN EXCEPT WHERE ONE OR BOTH ENDS WOULD INCLUDE STOP BARS.

Ⓓ THE SKIP-DASH PAVEMENT MARKINGS 1 OR 7 SHOULD BE CENTERED BETWEEN BOTH ENDS OF EACH CITY BLOCK AND SHALL BE PLACED SO THEY LINE UP ACROSS FROM EACH OTHER. SEE EXAMPLE ON SHEET 2 OF 3.

Ⓔ USE LARGE ARROW SIZE FOR BOTH RURAL AND URBAN LOCATIONS. (SEE LAST PAGE OF SECTION 780x FOR SYMBOLS TABLE)

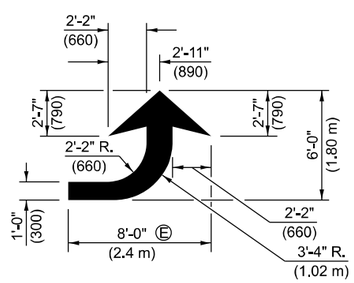

LEFT ARROW

REVERSE FOR RIGHT ARROW
AREA = 15.6 SQ. FT. (1.47 m)
(WHITE)

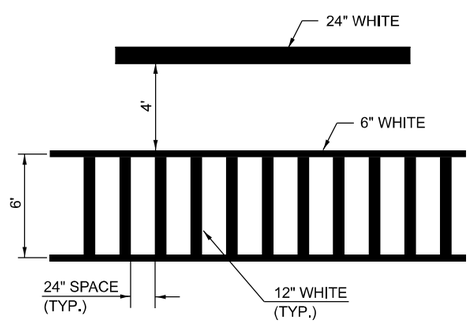

TYPICAL SPACING FOR CROSSWALKS & STOP BARS

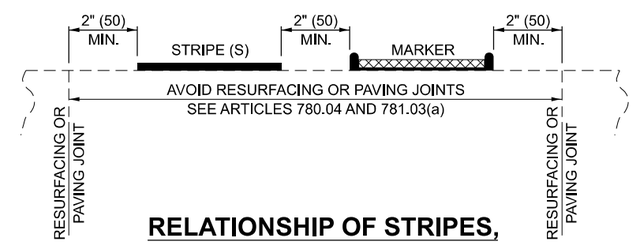

RELATIONSHIP OF STRIPES, MARKERS AND JOINTS

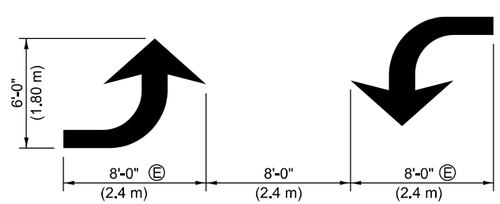

TYPICAL DOUBLE TURN ARROWS (WHITE)

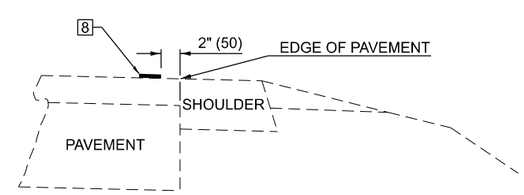

RELATIONSHIP OF EDGE LINE TO EDGE OF PAVEMENT

(SAFETY SHOULDER OR PAVED SURFACE)
SEE ARTICLE 780.04

Note: All dimensions are in INCHES (millimeters) unless otherwise shown.

DISTRICT 5 DETAIL NO. 7800AAAA

F.A.I RTE.	SECTION	COUNTY	TOTAL SHEETS	SHEET NO.
72	74-69BR	PIATT	78	36
		CONTRACT NO. 70629		
		ILLINOIS	FED. AID PROJECT	

USER NAME = druholl	DESIGNED -	REVISED -	STATE OF ILLINOIS DEPARTMENT OF TRANSPORTATION
	DRAWN - D5	REVISED -	
PLOT SCALE = $SCALE$	CHECKED -	REVISED -	
PLOT DATE = 7/30/2024	DATE -	REVISED -	

PAVEMENT MARKING AND MARKERS (RURAL & URBAN APPLICATIONS)

SCALE: | SHEET 3 OF 5 SHEETS | STA. | TO STA.

MODEL: 78000AAA-2 [Sheet]
FILE NAME: P:\22E3703-3 - 70629 White Heath\70629 Section 74-69 BR\CADD Sheets\D570629-sht-District_Details.dgn

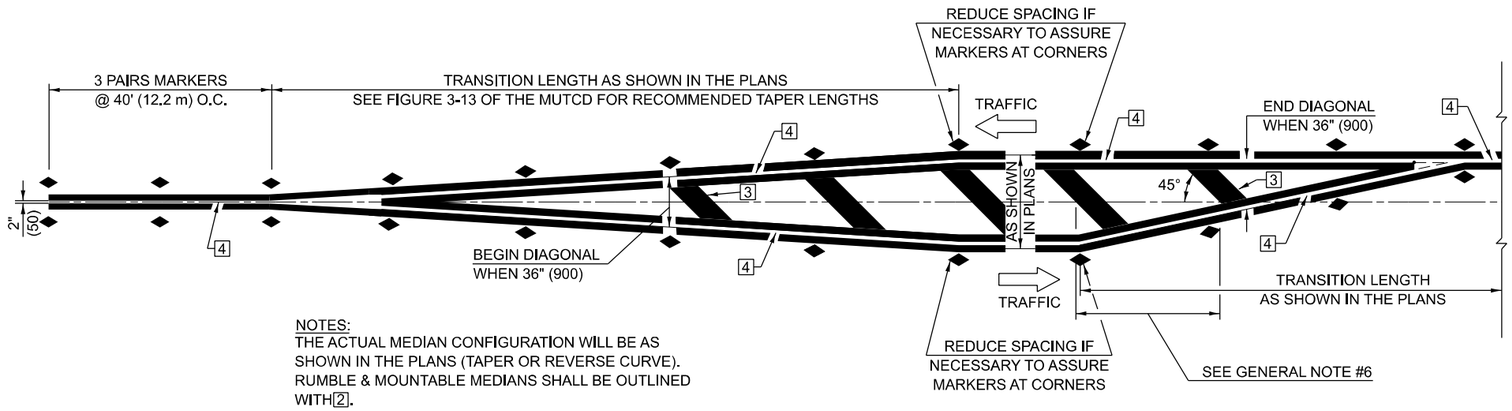

NOTES:
THE ACTUAL MEDIAN CONFIGURATION WILL BE AS SHOWN IN THE PLANS (TAPER OR REVERSE CURVE). RUMBLE & MOUNTABLE MEDIANS SHALL BE OUTLINED WITH 2.

TYPICAL MEDIAN TRANSITIONS

GENERAL NOTES

1. WHEN MEDIANS ARE PRESENT, PAVEMENT MARKINGS ARE TO BE PLACED ADJACENT TO MEDIANS.
2. SOME OF THE INFORMATION INCLUDED WITH THIS DETAIL MAY NOT BE APPLICABLE TO THIS IMPROVEMENT.
3. PAVEMENT MARKINGS ARE TO BE EXTENDED THROUGH OMISSIONS WHEN APPLICABLE.
4. A STRIPING KEY IS AVAILABLE ELSEWHERE AND SHALL BE SHOWN WHERE THE QUANTITIES ARE LISTED.
5. FINAL PAVEMENT MARKINGS SHALL BE IN PLACE PRIOR TO PLACING ANY RAISED REFLECTIVE PAVEMENT MARKERS.
6. THE FOLLOWING CRITERIA SHALL BE USED FOR SELECTING THE DIAGONAL PAVEMENT MARKING SPACING,
   <30 MPH USE 15' (<50 km/h USE 4.5 m)
   30-45 MPH USE 20' (50-75 km/h USE 6.0 m)
   >45 MPH USE 30' (>75 km/h USE 9.0 m)

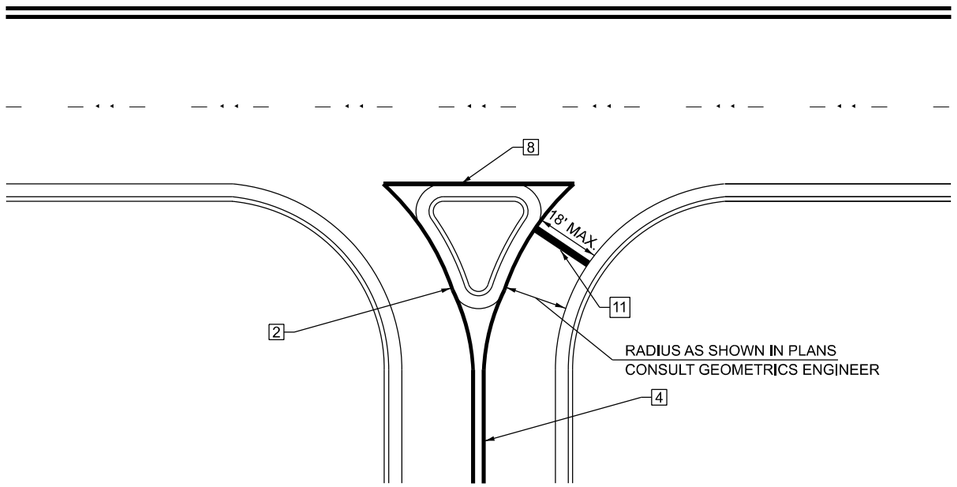

RIGHT IN - RIGHT OUT ACCESS

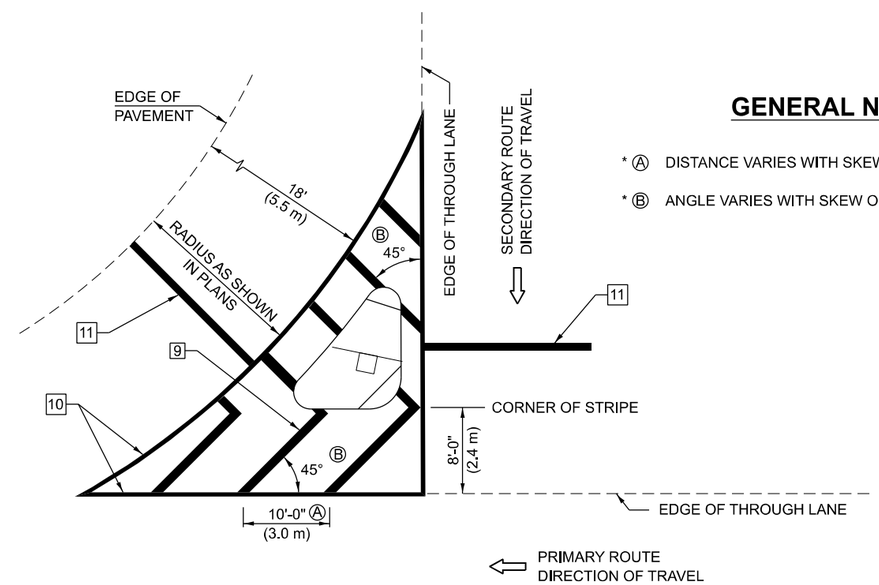

GENERAL NOTES

* Ⓐ DISTANCE VARIES WITH SKEW OF INTERSECTION.
* Ⓑ ANGLE VARIES WITH SKEW OF INTERSECTION.

ISLAND

* FOR RIGHT TURN LANE AND ISLAND STRIPING CONSULT GEOMETRICS ENGINEER.

Note: All dimensions are in INCHES (millimeters) unless otherwise shown.

MODEL: 78000AAA-3 [Sheet]
FILE NAME: P:\22E3703-3 - 70629 White Heath\70629 Section 74-69 BR\CADD Sheets\D570629-sht-District_Details.dgn

USER NAME = druholl	DESIGNED -	REVISED -	
	DRAWN - D5	REVISED -	
PLOT SCALE = $SCALE$	CHECKED -	REVISED -	
PLOT DATE = 7/30/2024	DATE -	REVISED -	

STATE OF ILLINOIS
DEPARTMENT OF TRANSPORTATION

PAVEMENT MARKING AND MARKERS
(RURAL & URBAN APPLICATIONS)

SCALE: SHEET 4 OF 5 SHEETS STA. TO STA.

DISTRICT 5 DETAIL NO. 7800AAAA

F.A.I RTE.	SECTION	COUNTY	TOTAL SHEETS	SHEET NO.
72	74-69BR	PIATT	78	37
		CONTRACT NO. 70629		
		ILLINOIS	FED. AID PROJECT	

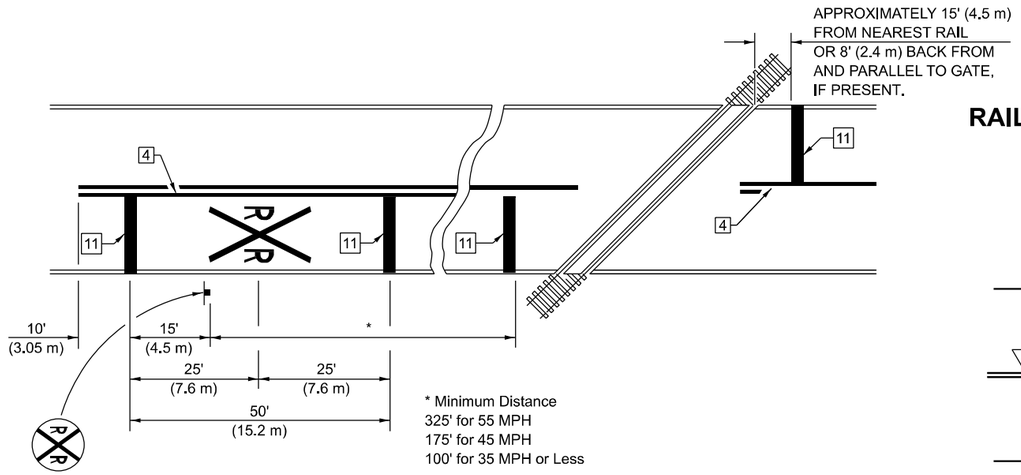

PAVEMENT MARKINGS AT RAILROAD-HIGHWAY GRADE CROSSING

RAILROAD CROSSING WITH INTERCONNECT ONLY

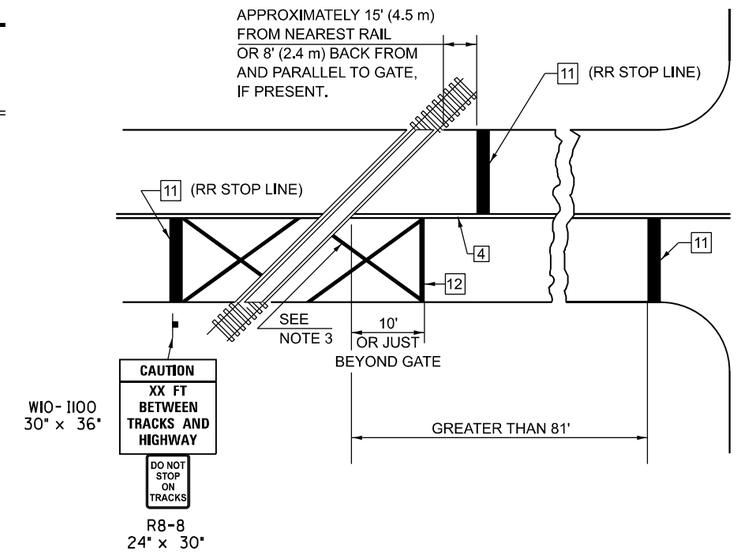

RAILROAD CROSSING WITH INTERCONNECT AND PRE-SIGNALS

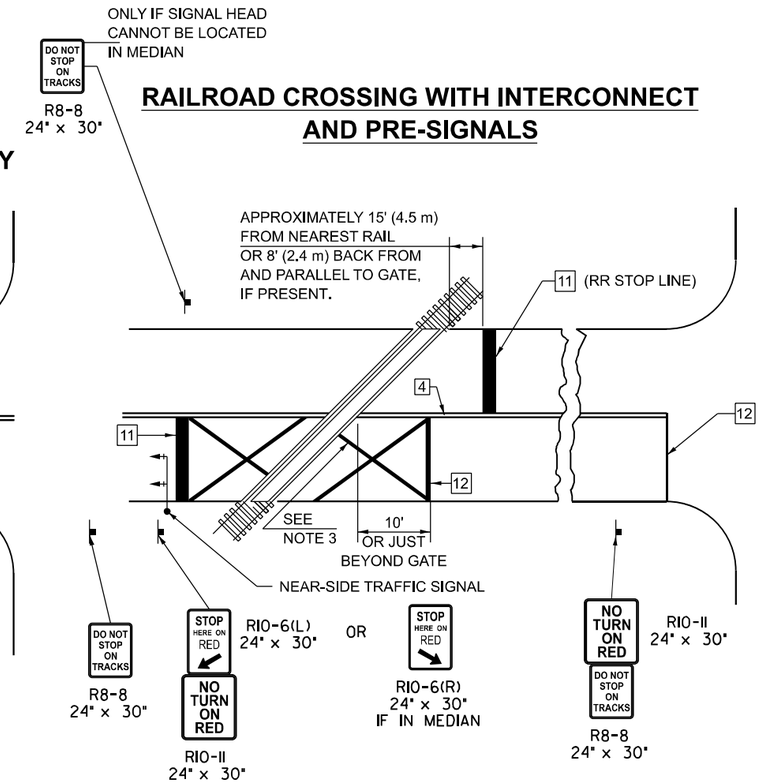

SUPPLEMENT PAVEMENT MARKING TREATMENT FOR RAILROAD-HIGHWAY GRADE CROSSING

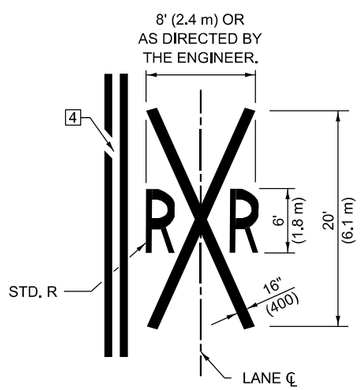

GENERAL NOTES

1. SUPPLEMENTAL PAVEMENT MARKINGS TO BE INSTALLED ONLY ON APPROACHES TO INTERSECTIONS CONTROLLED BY TRAFFIC SIGNALS WHICH ARE INTERCONNECTED WITH THE RAILROAD WARNING SIGNALS.

2. EXTEND PAVEMENT MARKINGS TO THE INTERSECTION ONLY WHERE NEAR-SIDE TRAFFIC SIGNALS ARE USED.

3. 6" WHITE PAVEMENT MARKINGS AT 45° TO PAVEMENT, 8' CENTER TO CENTER.

4. XX DISTANCE TO BE SHOWN ON SIGN MEASURED FROM A POINT 6 FEET FROM THE RAIL CLOSEST TO THE INTERSECTION OR FROM THE CLOSEST POINT ALONG THE EXIT GATE IF PRESENT OVER THE ROADWAY WHEN IN THE LOWERED POSITION TO THE STOP BAR OR CROSSWALK, WHICH EVER IS CLOSEST, ROUNDED DOWN TO NEAREST 5 FEET. WHERE THERE IS NO STOP LINE, MEASURE TO POINT WHERE DRIVER HAS A VIEW OF APPROACHING TRAFFIC.

5. THE CLEARANCE SIGN IS ALSO TO BE USED AS AN INTERIM MEASURE AT LOCATIONS WITH INTERCONNECTED INTERSECTION TRAFFIC SIGNALS WHERE IT IS PLANNED TO CHANGE THEM TO NEAR-SIDE SIGNALS AT A FUTURE TIME. IN THIS CASE, THE DISTANCE TO BE SHOWN ON THE SIGN IS MEASURED FROM THE EDGE OF THE STRIPED-OUT AREA INSTEAD OF 6 FEET FROM THE RAIL. THE SIGN IS TO BE REMOVED WHEN THE NEAR-SIDE SIGNALS ARE INSTALLED AND THE PAVEMENT MARKINGS EXTENDED TO THE INTERSECTION.

ALTERNATE SIGNS

R10-6a(L)
24" x 30"

R10-6a(R)
24" x 30"

NOTES

THE TRAVERSE SPREAD OF THE "X" MAY VARY ACCORDING TO LANE WIDTH.

ON MULTI-LANE ROADS, THE STOP LINES SHALL EXTEND ACROSS ALL APPROACH LANES AND SEPARATE RXR SYMBOLS SHALL BE PLACED ADJACENT TO EACH OTHER IN EACH LANE.

WHEN THE PAVEMENT MARKING SYMBOL IS USED, A PORTION OF THE SYMBOL SHOULD BE LOCATED DIRECTLY ADJACENT TO THE ADVANCE WARNING SIGN (W10-1) AS PLACED BY TABLE II-1, CONDITION B OF THE MUTCD.

Note: All dimensions are in INCHES (millimeters) unless otherwise shown.

DISTRICT 5 DETAIL NO. 7800AAAA

F.A.I RTE.	SECTION	COUNTY	TOTAL SHEETS	SHEET NO.
72	74-69BR	PIATT	78	38
		CONTRACT NO. 70629		
		ILLINOIS	FED. AID PROJECT	

USER NAME = druholl	DESIGNED -	REVISED -	STATE OF ILLINOIS DEPARTMENT OF TRANSPORTATION
	DRAWN - D5	REVISED -	
PLOT SCALE = $SCALE$	CHECKED -	REVISED -	
PLOT DATE = 7/30/2024	DATE -	REVISED -	

PAVEMENT MARKING AND MARKERS (RURAL & URBAN APPLICATIONS)

SCALE: SHEET 5 OF 5 SHEETS STA. TO STA.

MODEL: 78000AAA-1 [Sheet]
FILE NAME: P:\22E3703-3 - 70629 White Heath\70629 Section 74-69 BR\CADD Sheets\D570629-sht-District_Details.dgn

Benchmark 4907-1: Chiseled Square on top of the northeast wingwall of SN 074-0026, elevation 722.99

Existing Structure:
S.N. 074-0026 was originally constructed in 1962 as part of F.A. Route 135 Section 74-69 HB-2, station 1286+39.70. The existing 4-span structure consists of 5-36" wide flange beams supporting a 7" reinforced concrete deck. The structure has an out-to-out deck width of 33'-8" and a back-to-back abutment length of 281'-0". The existing stub abutments and all piers are supported by concrete footings and concrete piles. The existing structure is on a 23°15'20" left forward skew.
Existing structure is to be removed and replaced.

Proposed structure to be built under road closure.

No Salvage

DESIGN SPECIFICATIONS

2020 AASHTO LRFD Bridge Design Specifications, 9th Edition

DESIGN STRESSES

FIELD UNITS
f'c = 3,500 psi
f'c = 4,000 psi (Superstructure)
fy = 60,000 psi (Reinforcement)
fy = 50,000 psi (M270 Grade 50)
All structural steel shall be metallized

SEISMIC DATA

Seismic Performance Zone (SPZ) = 1
Design Spectral Acceleration at 1.0 sec. (SD1) = 0.139g
Design Spectral Acceleration at 0.2 sec. (SDS) = 0.243g
Soil Site Class = D

LOADING HL-93

Allow 50#/sq. ft. for Future Wearing Surface.

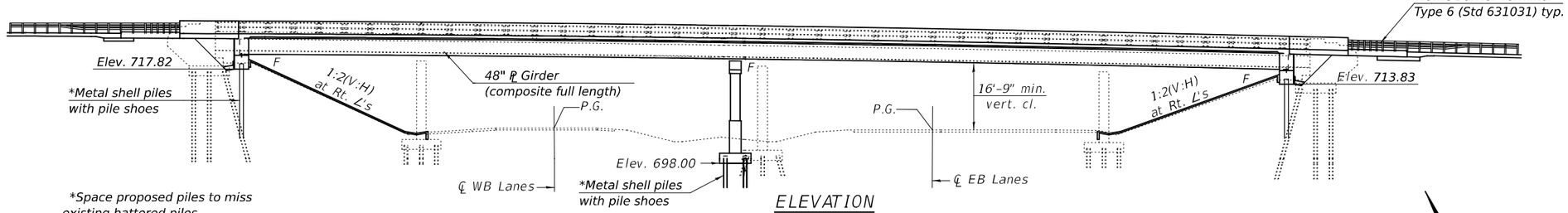

*Space proposed piles to miss existing battered piles.

ELEVATION

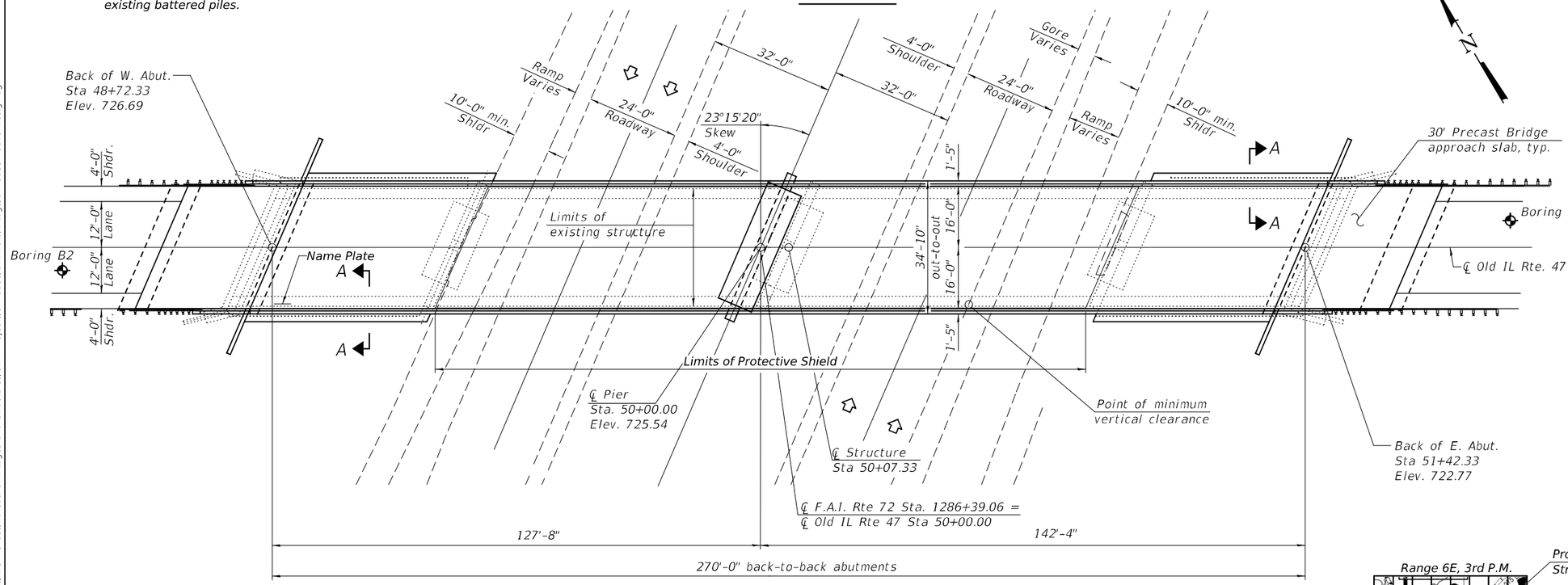

PLAN

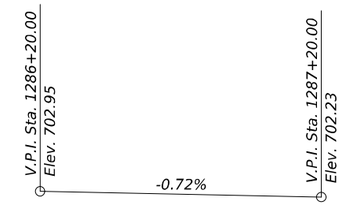

PROFILE GRADE

(Along ℄ W.B. Lanes - F.A.I. 72)

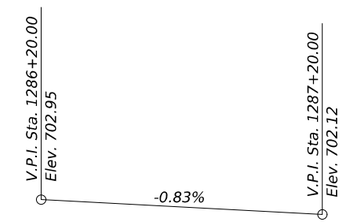

PROFILE GRADE

(Along ℄ E.B. Lanes - F.A.I. 72)

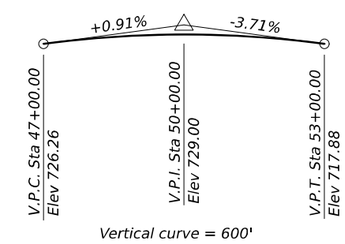

PROFILE GRADE

(Along ℄ Old IL. Rte 47)

Up to ¼ inch to be ground off the bridge deck and the bridge approach slabs. The Profile Grade shows the final grade after grinding.

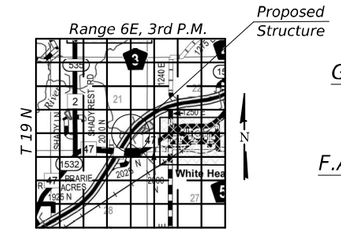

LOCATION SKETCH

GENERAL PLAN & ELEVATION
OLD ILLINOIS RTE. 47
OVER F.A.I. RTE 72
F.A.S. RTE 1532 - SEC. 74-69BR
PIATT COUNTY
STATION 50+07.33
STRUCTURE NO. 074-0088

LICENSED STRUCTURAL ENGINEER
JAYME F. SCHIFF
081-005540
STATE OF ILLINOIS

EXPIRES 11-30-2024

DESIGNED - DAVID H. RICHTER	EXAMINED	DATE - 10-10-2024	STATE OF ILLINOIS DEPARTMENT OF TRANSPORTATION
CHECKED - RYAN P. NEGANGARD	ENGINEER OF BRIDGE DESIGN		
DRAWN - GLENN W. STOVER	PASSED	REVISED -	
CHECKED - D.H.R. / R.P.N.	ENGINEER OF BRIDGES AND STRUCTURES	REVISED -	

F.A.S. RTE.	SECTION	COUNTY	TOTAL SHEETS	SHEET NO.
1532	74-69BR	PIATT	78	39
		CONTRACT NO. 70629		
		ILLINOIS	FED. AID PROJECT	

SHEET 1 OF 30 SHEETS

MODEL: 0740088-70629-001
FILE NAME: pw://ildot-pw.bentley.com:PWIDOT/Documents/IDOT Offices/Bureau of Bridges and Structures/OBM Projects/0740088/CADData/Bridge/0740088-70629-Design.dgn
9/24/2024 8:49:49 PM

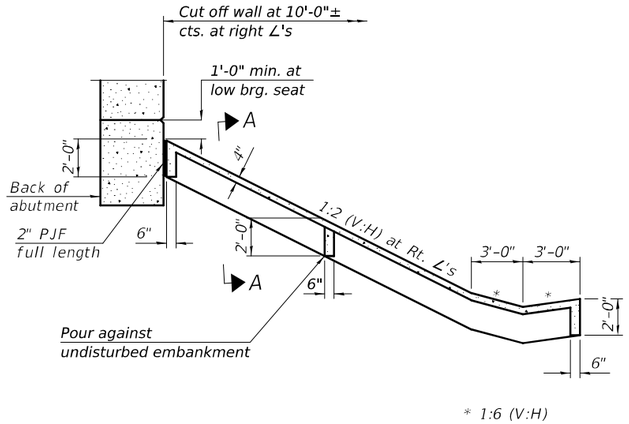

SECTION THRU CONCRETE SLOPEWALL

Notes:
Slope wall shall be reinforced with welded wire fabric, 6 in. x 6 in. – W4.0 x W4.0, weighing 58 lbs. per 100 sq. ft.
Removal of existing concrete slopewall shall be included in the cost of Removal of Existing Structures.

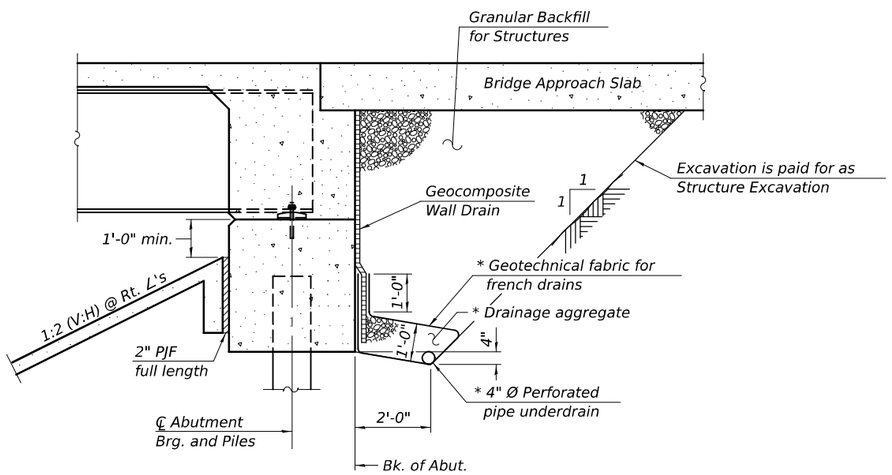

SECTION THRU INTEGRAL ABUTMENT

(Horiz. dim. at Rt. ∠'s)

*Included in the cost of Pipe Underdrains for Structures.

Note:
All drainage system components shall extend to 2'-0" from the end of each wingwall except an outlet pipe shall extend until intersecting with the side slopes. The pipes shall drain into concrete headwalls. (See Article 601.05 of the Standard Specifications and Highway Standard 601101).

INDEX OF SHEETS

STATION 50+07.33
BUILT 20 BY
STATE OF ILLINOIS
F.A.S. RTE. 1532 - SEC. 74-69BR
LOADING HL-93
STRUCTURE NO. 074-0088

NAME PLATE

See Std. 515001

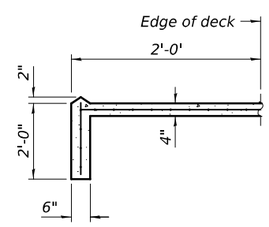

SECTION A-A

GENERAL NOTES

Fasteners shall be ASTM F 3125 Grade A325 Type 1, hot dip galvanized bolts in metallized areas. Bolts 7/8 in. diameter, holes 15/16 in. diameter, unless otherwise noted. See special provision for "Metallizing of Structural Steel".
Calculated weight of Structural Steel = 467,850 lbs. (M270 Grade 50)
Calculated weight of Structural Steel = 25,350 lbs. (M270 grade 36)
No field welding is permitted except as specified in the contract documents.
Bearing seat surfaces shall be constructed or adjusted to the designated elevations within a tolerance of 1/8 in. (0.01 ft.). Adjustment shall be made either by grinding the surface or by shimming the bearings.
The existing structural steel coating contains lead. The Contractor shall take appropriate precautions to address the presence of lead on this project.
Reinforcement bars designated (E) shall be epoxy coated.
All new structural steel shall be metallized and coated with a clear sealer (System I). See Special Provision for "Metallizing of Structural Steel."
Slipforming of the parapets is not allowed.

TOTAL BILL OF MATERIAL

ITEM	UNIT	SUPER	SUB	TOTAL
Removal of Existing Structures	Each			1
Protective Shield	Sq. Yd.	651		651
Structure Excavation	Cu. Yd.		332	332
Concrete Structures	Cu. Yd.		138.8	138.8
Concrete Superstructure	Cu. Yd.	375.0		375.0
Protective Coat	Sq. Yd.	1442		1442
Furnishing and Erecting Structural Steel	L. Sum	1		1
Stud Shear Connectors	Each	3216		3216
Mechanical Splicers	Each		40	40
Reinforcement Bars, Epoxy Coated	Pound	92340	20820	113160
Slope Wall 4 Inch	Sq. Yd.		425	425
Furnishing Metal Shell Piles 14" x 0.312"	Foot		1118	1118
Driving Piles	Foot		1118	1118
Test Pile Metal Shells	Each		2	2
Pile Shoes	Each		26	26
Name Plates	Each	1		1
Preformed Joint Strip Seal	Foot	74		74
Anchor Bolts, 1"	Each		24	24
Anchor Bolts, 1¼"	Each		12	12
Granular Backfill for Structures	Cu. Yd.		172	172
Geocomposite Wall Drain	Sq. Yd.		85	85
Pipe Underdrains for Structures 4"	Foot		154	154
Diamond Grinding (Bridge Section)	Sq. Yd.	1157		1157
Bridge Deck Grooving (Longitudinal)	Sq. Yd.	874		874
Concrete Wearing Surface, 5"	Sq. Yd.	226		226
Precast Bridge Approach Slab	Sq. Ft.	1910		1910
Bar Terminators	Each	124	368	492

MODEL: 0740088-70629-002
FILE NAME: pw://ildot-pw.bentley.com:PWIDOT/Documents/IDOT Offices/Bureau of Bridges and Structures/OBM Projects/0740088/CADData/Bridge/0740088-70629-Design.dgn
10/10/2024 2:21:44 PM

DESIGNED -	DAVID H. RICHTER	EXAMINED	ENGINEER OF BRIDGE DESIGN
CHECKED -	RYAN P. NEGANGARD	PASSED	ENGINEER OF BRIDGES AND STRUCTURES
DRAWN -	GLENN W. STOVER	DATE -	10-10-2024
CHECKED -	D.H.R. / R.P.N.	REVISED -	REVISED -

STATE OF ILLINOIS
DEPARTMENT OF TRANSPORTATION

GENERAL DATA
STRUCTURE NO. 074-0088

SHEET 2 OF 30 SHEETS

F.A.S. RTE.	SECTION	COUNTY	TOTAL SHEETS	SHEET NO.
1532	74-69BR	PIATT	78	40

CONTRACT NO. 70629
ILLINOIS FED. AID PROJECT

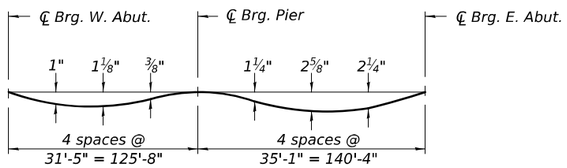

DEAD LOAD DEFLECTION DIAGRAM

(Includes weight of concrete only.)

Note:
The above deflections are not to be used in the field if the engineer is working from the grade elevations adjusted for dead load deflections and grinding as shown on sheets 4 thru 6 of 30.

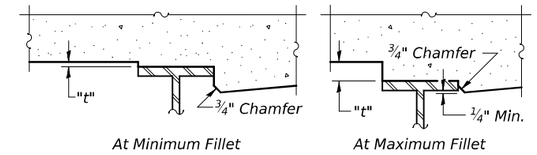

To determine "t": After all structural steel has been erected, elevations of the top flanges of the beams shall be taken at intervals shown below. These elevations subtracted from the "Theoretical Grade Elevations Adjusted for Dead Load Deflections and Grinding" shown on sheets 4 thru 6 of 30, minus 8¼" deck thickness, equals the fillet heights "t" above top flange of beams.

The slab is to be ground after curing to achieve smoothness, but the slab is not to be ground to elevations below the "Theoretical Grade Elevations" shown on sheets 4 thru 6 of 30. For grinding the deck, see Special Provisions.

FILLET HEIGHTS

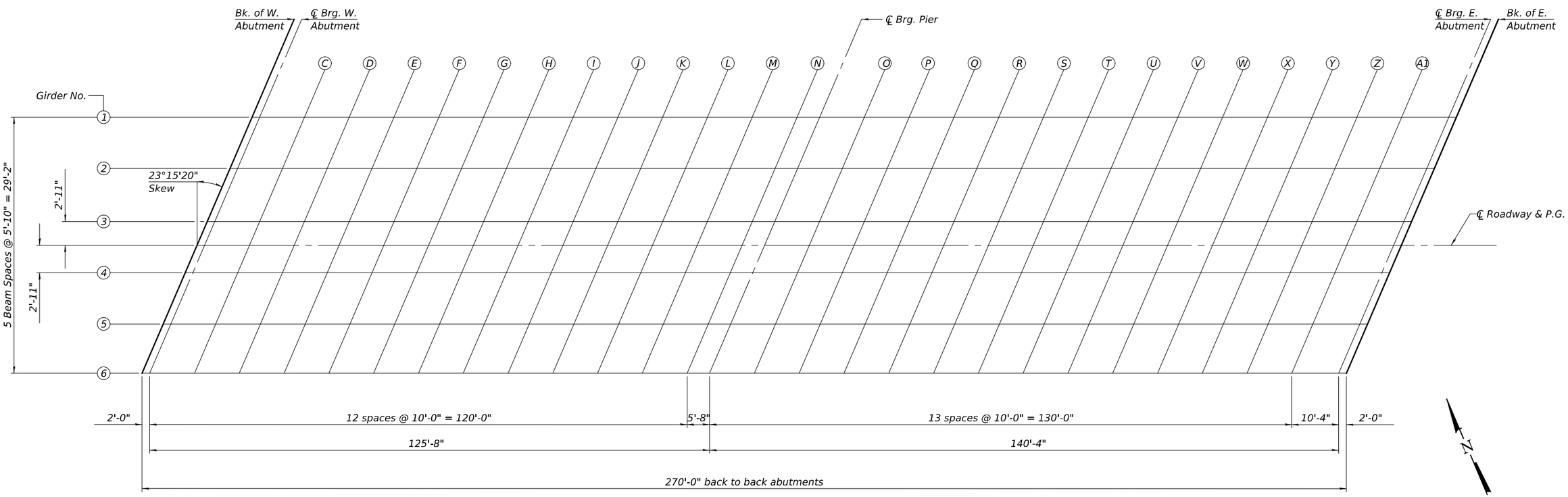

MODEL: 0740088-70629-003
FILE NAME: pw://ildot-pw.bentley.com:PWIDOT/Documents/IDOT Offices/Bureau of Bridges and Structures/OBM Projects/0740088/CADData/Bridge/0740088-70629-Design.dgn
10/10/2024 2:21:45 PM

DESIGNED - DAVID H. RICHTER	EXAMINED	DATE - 10-10-2024	STATE OF ILLINOIS DEPARTMENT OF TRANSPORTATION
CHECKED - RYAN P. NEGANGARD	ENGINEER OF BRIDGE DESIGN		
DRAWN - GLENN W. STOVER	PASSED	REVISED -	
CHECKED - D.H.R. / R.P.N.	ENGINEER OF BRIDGES AND STRUCTURES	REVISED -	

TOP OF SLAB ELEVATIONS
STRUCTURE NO. 074-0088

SHEET 3 OF 30 SHEETS

F.A.S. RTE.	SECTION	COUNTY	TOTAL SHEETS	SHEET NO.
1532	74-69BR	PIATT	78	41
		CONTRACT NO. 70629		
		ILLINOIS	FED. AID PROJECT	

GIRDER 1

Location	Station	Offset	Theoretical Grade Elevations	Theoretical Grade Elevations Adjusted For Dead Load Deflection and Grinding
Bk. of W. Abut.	48+78.60	-14.58	726.43	726.45
℄ Brg. W. Abut.	48+80.60	-14.58	726.42	726.44
C	48+90.60	-14.58	726.37	726.42
D	49+00.60	-14.58	726.31	726.39
E	49+10.60	-14.58	726.24	726.35
F	49+20.60	-14.58	726.17	726.28
G	49+30.60	-14.58	726.09	726.20
H	49+40.60	-14.58	726.00	726.11
I	49+50.60	-14.58	725.90	725.99
J	49+60.60	-14.58	725.79	725.87
K	49+70.60	-14.58	725.68	725.74
L	49+80.60	-14.58	725.56	725.60
M	49+90.60	-14.58	725.43	725.46
N	50+00.60	-14.58	725.29	725.32
℄ Brg. Pier	50+06.26	-14.58	725.21	725.23
O	50+16.26	-14.58	725.07	725.12
P	50+26.26	-14.58	724.91	724.99
Q	50+36.26	-14.58	724.75	724.86
R	50+46.26	-14.58	724.57	724.72
S	50+56.26	-14.58	724.40	724.57
T	50+66.26	-14.58	724.21	724.42
U	50+76.26	-14.58	724.01	724.26
V	50+86.26	-14.58	723.81	724.04
W	50+96.26	-14.58	723.60	723.82
X	51+06.26	-14.58	723.38	723.60
Y	51+16.26	-14.58	723.16	723.34
Z	51+26.26	-14.58	722.93	723.06
A1	51+36.26	-14.58	722.69	722.76
℄ Brg. E. Abut.	51+46.60	-14.58	722.43	722.45
Bk. of E. Abut.	51+48.60	-14.58	722.38	722.40

GIRDER 2

Location	Station	Offset	Theoretical Grade Elevations	Theoretical Grade Elevations Adjusted For Dead Load Deflection and Grinding
Bk. of W. Abut.	48+76.09	-8.75	726.54	726.56
℄ Brg. W. Abut.	48+78.09	-8.75	726.53	726.55
C	48+88.09	-8.75	726.48	726.53
D	48+98.09	-8.75	726.43	726.50
E	49+08.09	-8.75	726.36	726.46
F	49+18.09	-8.75	726.29	726.40
G	49+28.09	-8.75	726.21	726.32
H	49+38.09	-8.75	726.12	726.23
I	49+48.09	-8.75	726.03	726.12
J	49+58.09	-8.75	725.92	726.00
K	49+68.09	-8.75	725.81	725.87
L	49+78.09	-8.75	725.69	725.73
M	49+88.09	-8.75	725.56	725.60
N	49+98.09	-8.75	725.43	725.46
℄ Brg. Pier	50+03.76	-8.75	725.35	725.37
O	50+13.76	-8.75	725.20	725.25
P	50+23.76	-8.75	725.05	725.13
Q	50+33.76	-8.75	724.89	725.00
R	50+43.76	-8.75	724.72	724.86
S	50+53.76	-8.75	724.54	724.72
T	50+63.76	-8.75	724.36	724.57
U	50+73.76	-8.75	724.16	724.41
V	50+83.76	-8.75	723.96	724.20
W	50+93.76	-8.75	723.76	723.98
X	51+03.76	-8.75	723.54	723.75
Y	51+13.76	-8.75	723.32	723.50
Z	51+23.76	-8.75	723.09	723.21
A1	51+33.76	-8.75	722.85	722.92
℄ Brg. E. Abut.	51+44.09	-8.75	722.59	722.61
Bk. of E. Abut.	51+46.09	-8.75	722.54	722.56

GIRDER 3

Location	Station	Offset	Theoretical Grade Elevations	Theoretical Grade Elevations Adjusted For Dead Load Deflection and Grinding
Bk. of W. Abut.	48+73.58	-2.92	726.64	726.66
℄ Brg. W. Abut.	48+75.58	-2.92	726.63	726.65
C	48+85.58	-2.92	726.59	726.63
D	48+95.58	-2.92	726.53	726.61
E	49+05.58	-2.92	726.47	726.57
F	49+15.58	-2.92	726.40	726.50
G	49+25.58	-2.92	726.32	726.43
H	49+35.58	-2.92	726.23	726.34
I	49+45.58	-2.92	726.14	726.23
J	49+55.58	-2.92	726.04	726.11
K	49+65.58	-2.92	725.93	725.98
L	49+75.58	-2.92	725.81	725.85
M	49+85.58	-2.92	725.68	725.72
N	49+95.58	-2.92	725.55	725.58
℄ Brg. Pier	50+01.25	-2.92	725.47	725.49
O	50+11.25	-2.92	725.33	725.38
P	50+21.25	-2.92	725.18	725.26
Q	50+31.25	-2.92	725.02	725.13
R	50+41.25	-2.92	724.85	724.99
S	50+51.25	-2.92	724.67	724.85
T	50+61.25	-2.92	724.49	724.70
U	50+71.25	-2.92	724.30	724.54
V	50+81.25	-2.92	724.10	724.33
W	50+91.25	-2.92	723.90	724.12
X	51+01.25	-2.92	723.68	723.90
Y	51+11.25	-2.92	723.46	723.64
Z	51+21.25	-2.92	723.23	723.36
A1	51+31.25	-2.92	722.99	723.07
℄ Brg. E. Abut.	51+41.58	-2.92	722.74	722.76
Bk. of E. Abut.	51+43.58	-2.92	722.69	722.71

℄ ROADWAY & P.G.

Location	Station	Offset	Theoretical Grade Elevations	Theoretical Grade Elevations Adjusted For Dead Load Deflection and Grinding
Bk. of W. Abut.	48+72.33	0.00	726.69	726.71
℄ Brg. W. Abut.	48+74.33	0.00	726.68	726.70
C	48+84.33	0.00	726.64	726.68
D	48+94.33	0.00	726.58	726.66
E	49+04.33	0.00	726.52	726.62
F	49+14.33	0.00	726.45	726.56
G	49+24.33	0.00	726.37	726.48
H	49+34.33	0.00	726.29	726.40
I	49+44.33	0.00	726.19	726.29
J	49+54.33	0.00	726.09	726.17
K	49+64.33	0.00	725.98	726.04
L	49+74.33	0.00	725.87	725.91
M	49+84.33	0.00	725.74	725.78
N	49+94.33	0.00	725.61	725.64
℄ Brg. Pier	50+00.00	0.00	725.54	725.56
O	50+10.00	0.00	725.39	725.44
P	50+20.00	0.00	725.24	725.32
Q	50+30.00	0.00	725.08	725.19
R	50+40.00	0.00	724.91	725.06
S	50+50.00	0.00	724.74	724.92
T	50+60.00	0.00	724.56	724.77
U	50+70.00	0.00	724.37	724.61
V	50+80.00	0.00	724.17	724.40
W	50+90.00	0.00	723.97	724.19
X	51+00.00	0.00	723.75	723.97
Y	51+10.00	0.00	723.53	723.72
Z	51+20.00	0.00	723.30	723.43
A1	51+30.00	0.00	723.07	723.14
℄ Brg. E. Abut.	51+40.33	0.00	722.82	722.84
Bk. of E. Abut.	51+42.33	0.00	722.77	722.79

GIRDER 4

Location	Station	Offset	Theoretical Grade Elevations	Theoretical Grade Elevations Adjusted For Dead Load Deflection and Grinding
Bk. of W. Abut.	48+71.08	2.92	726.65	726.67
℄ Brg. W. Abut.	48+73.08	2.92	726.64	726.66
C	48+83.08	2.92	726.60	726.65
D	48+93.08	2.92	726.54	726.62
E	49+03.08	2.92	726.48	726.59
F	49+13.08	2.92	726.41	726.52
G	49+23.08	2.92	726.34	726.45
H	49+33.08	2.92	726.25	726.36
I	49+43.08	2.92	726.16	726.26
J	49+53.08	2.92	726.06	726.14
K	49+63.08	2.92	725.95	726.01
L	49+73.08	2.92	725.84	725.88
M	49+83.08	2.92	725.72	725.75
N	49+93.08	2.92	725.59	725.61
℄ Brg. Pier	49+98.74	2.92	725.51	725.53
O	50+08.74	2.92	725.37	725.42
P	50+18.74	2.92	725.22	725.30
Q	50+28.74	2.92	725.06	725.17
R	50+38.74	2.92	724.89	725.04
S	50+48.74	2.92	724.72	724.89
T	50+58.74	2.92	724.54	724.75
U	50+68.74	2.92	724.35	724.59
V	50+78.74	2.92	724.15	724.39
W	50+88.74	2.92	723.95	724.17
X	50+98.74	2.92	723.74	723.95
Y	51+08.74	2.92	723.52	723.70
Z	51+18.74	2.92	723.29	723.42
A1	51+28.74	2.92	723.05	723.13
℄ Brg. E. Abut.	51+39.08	2.92	722.80	722.82
Bk. of E. Abut.	51+41.08	2.92	722.75	722.77

GIRDER 5

Location	Station	Offset	Theoretical Grade Elevations	Theoretical Grade Elevations Adjusted For Dead Load Deflection and Grinding
Bk. of W. Abut.	48+68.57	8.75	726.57	726.59
℄ Brg. W. Abut.	48+70.57	8.75	726.57	726.59
C	48+80.57	8.75	726.52	726.57
D	48+90.57	8.75	726.47	726.55
E	49+00.57	8.75	726.41	726.51
F	49+10.57	8.75	726.34	726.45
G	49+20.57	8.75	726.27	726.38
H	49+30.57	8.75	726.19	726.30
I	49+40.57	8.75	726.10	726.19
J	49+50.57	8.75	726.00	726.08
K	49+60.57	8.75	725.89	725.95
L	49+70.57	8.75	725.78	725.82
M	49+80.57	8.75	725.66	725.69
N	49+90.57	8.75	725.53	725.56
℄ Brg. Pier	49+96.24	8.75	725.46	725.48
O	50+06.24	8.75	725.32	725.37
P	50+16.24	8.75	725.17	725.25
Q	50+26.24	8.75	725.01	725.12
R	50+36.24	8.75	724.85	724.99
S	50+46.24	8.75	724.68	724.85
T	50+56.24	8.75	724.50	724.70
U	50+66.24	8.75	724.31	724.55
V	50+76.24	8.75	724.12	724.35
W	50+86.24	8.75	723.91	724.14
X	50+96.24	8.75	723.70	723.92
Y	51+06.24	8.75	723.49	723.67
Z	51+16.24	8.75	723.26	723.39
A1	51+26.24	8.75	723.03	723.10
℄ Brg. E. Abut.	51+36.57	8.75	722.78	722.80
Bk. of E. Abut.	51+38.57	8.75	722.73	722.75

GIRDER 6

Location	Station	Offset	Theoretical Grade Elevations	Theoretical Grade Elevations Adjusted For Dead Load Deflection and Grinding
Bk. of W. Abut.	48+66.06	14.58	726.48	726.50
℄ Brg. W. Abut.	48+68.06	14.58	726.48	726.50
C	48+78.06	14.58	726.43	726.48
D	48+88.06	14.58	726.38	726.46
E	48+98.06	14.58	726.33	726.43
F	49+08.06	14.58	726.26	726.37
G	49+18.06	14.58	726.19	726.30
H	49+28.06	14.58	726.11	726.22
I	49+38.06	14.58	726.02	726.12
J	49+48.06	14.58	725.92	726.00
K	49+58.06	14.58	725.82	725.88
L	49+68.06	14.58	725.71	725.75
M	49+78.06	14.58	725.59	725.62
N	49+88.06	14.58	725.46	725.49
℄ Brg. Pier	49+93.73	14.58	725.39	725.41
O	50+03.73	14.58	725.25	725.30
P	50+13.73	14.58	725.10	725.19
Q	50+23.73	14.58	724.95	725.06
R	50+33.73	14.58	724.79	724.93
S	50+43.73	14.58	724.62	724.79
T	50+53.73	14.58	724.44	724.65
U	50+63.73	14.58	724.26	724.50
V	50+73.73	14.58	724.06	724.30
W	50+83.73	14.58	723.86	724.09
X	50+93.73	14.58	723.66	723.87
Y	51+03.73	14.58	723.44	723.62
Z	51+13.73	14.58	723.22	723.35
A1	51+23.73	14.58	722.99	723.06
℄ Brg. E. Abut.	51+34.06	14.58	722.74	722.76
Bk. of E. Abut.	51+36.06	14.58	722.69	722.71

NORTH EDGE OF SHOULDER

Location	Station	Offset	Theoretical Grade Elevations	Theoretical Grade Elevations Adjusted For Grinding
W. End of W. Appr.	48+50.29	-16.00	726.50	726.52
A	48+60.29	-16.00	726.47	726.49
B	48+70.29	-16.00	726.44	726.46
E. End of W. Appr.	48+80.29	-16.00	726.40	726.42

NORTH EDGE OF ROAWAY

Location	Station	Offset	Theoretical Grade Elevations	Theoretical Grade Elevations Adjusted For Grinding
W. End of W. Appr.	48+48.57	-12.00	726.59	726.61
A	48+58.57	-12.00	726.56	726.58
B	48+68.57	-12.00	726.53	726.55
E. End of W. Appr.	48+78.57	-12.00	726.48	726.50

℄ ROADWAY & P.G.

Location	Station	Offset	Theoretical Grade Elevations	Theoretical Grade Elevations Adjusted For Grinding
W. End of W. Appr.	48+43.41	0.00	726.78	726.80
A	48+53.41	0.00	726.76	726.78
B	48+63.41	0.00	726.72	726.74
E. End of W. Appr.	48+73.41	0.00	726.69	726.71

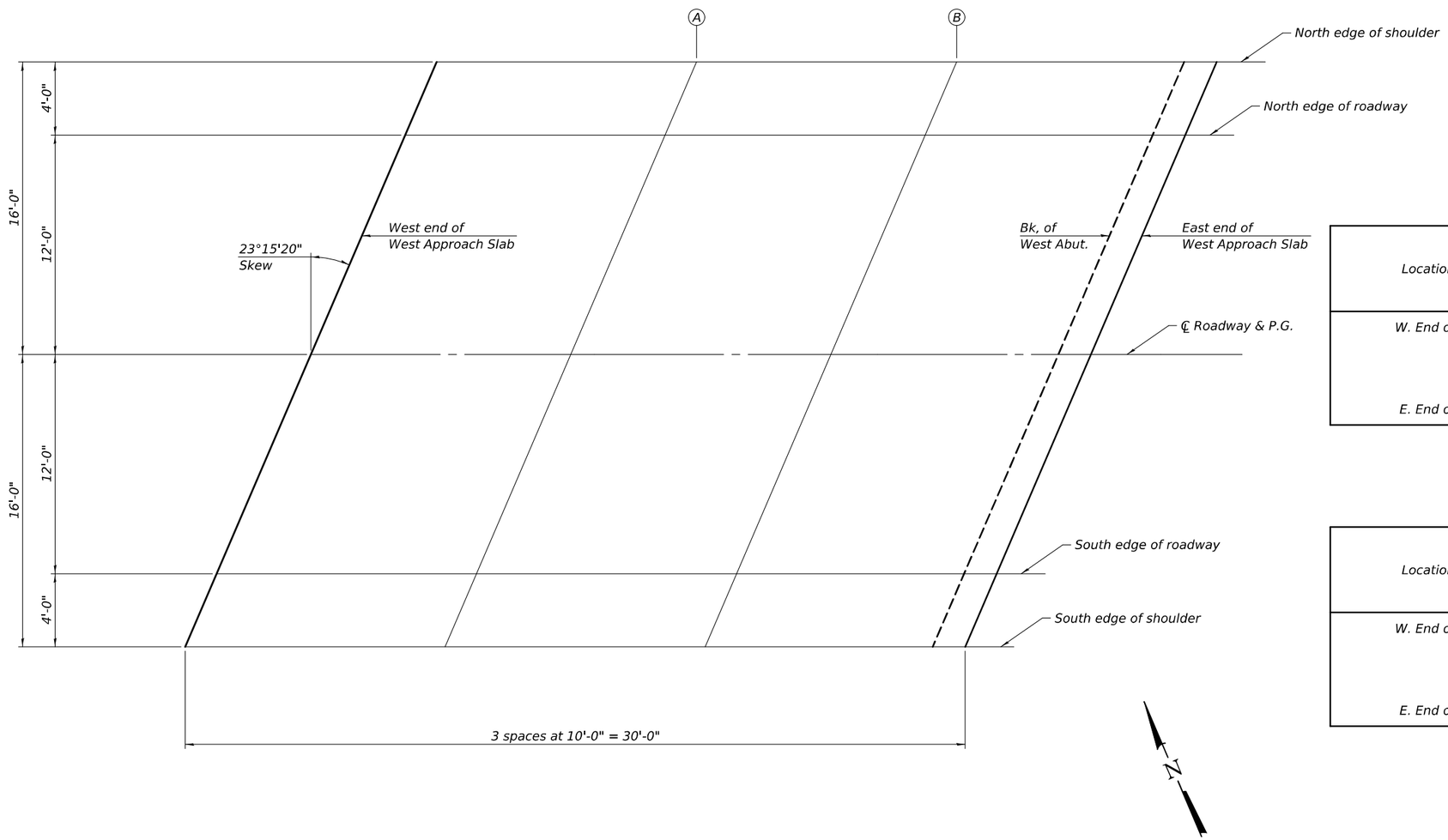

PLAN

SOUTH EDGE OF ROADWAY

Location	Station	Offset	Theoretical Grade Elevations	Theoretical Grade Elevations Adjusted For Grinding
W. End of W. Appr.	48+38.26	12.00	726.61	726.63
A	48+48.26	12.00	726.59	726.61
B	48+58.26	12.00	726.56	726.58
E. End of W. Appr.	48+68.26	12.00	726.53	726.55

SOUTH EDGE OF SHOULDER

Location	Station	Offset	Theoretical Grade Elevations	Theoretical Grade Elevations Adjusted For Grinding
W. End of W. Appr.	48+36.54	16.00	726.53	726.55
A	48+46.54	16.00	726.51	726.53
B	48+56.54	16.00	726.49	726.51
E. End of W. Appr.	48+66.54	16.00	726.45	726.47

DESIGNED -	DAVID H. RICHTER	EXAMINED	ENGINEER OF BRIDGE DESIGN
CHECKED -	RYAN P. NEGANGARD		
DRAWN -	GLENN W. STOVER	PASSED	ENGINEER OF BRIDGES AND STRUCTURES
CHECKED -	D.H.R. / R.P.N.		

DATE - 10-10-2024
REVISED - ____
REVISED - ____

STATE OF ILLINOIS
DEPARTMENT OF TRANSPORTATION

TOP OF W. APPROACH SLAB ELEVATIONS
STRUCTURE NO. 074-0088

SHEET 7 OF 30 SHEETS

F.A.S. RTE.	SECTION	COUNTY	TOTAL SHEETS	SHEET NO.
1532	74-69BR	PIATT	78	45

CONTRACT NO. 70629
ILLINOIS | FED. AID PROJECT

NORTH EDGE OF SHOULDER

Location	Station	Offset	Theoretical Grade Elevations	Theoretical Grade Elevations Adjusted For Grinding
W. End of E. Appr.	51+48.12	-16.00	722.36	722.38
B1	51+58.12	-16.00	722.10	722.12
C1	51+68.12	-16.00	721.84	721.86
E. End of E. Appr.	51+78.12	-16.00	721.57	721.59

NORTH EDGE OF ROADWAY

Location	Station	Offset	Theoretical Grade Elevations	Theoretical Grade Elevations Adjusted For Grinding
W. End of E. Appr.	51+46.40	-12.00	722.48	722.50
B1	51+56.40	-12.00	722.23	722.25
C1	51+66.40	-12.00	721.96	721.98
E. End of E. Appr.	51+76.40	-12.00	721.69	721.71

℄ ROADWAY & P.G.

Location	Station	Offset	Theoretical Grade Elevations	Theoretical Grade Elevations Adjusted For Grinding
W. End of E. Appr.	51+41.25	0.00	722.79	722.81
B1	51+51.25	0.00	722.54	722.56
C1	51+61.25	0.00	722.28	722.30
E. End of E. Appr.	51+71.25	0.00	722.01	722.03

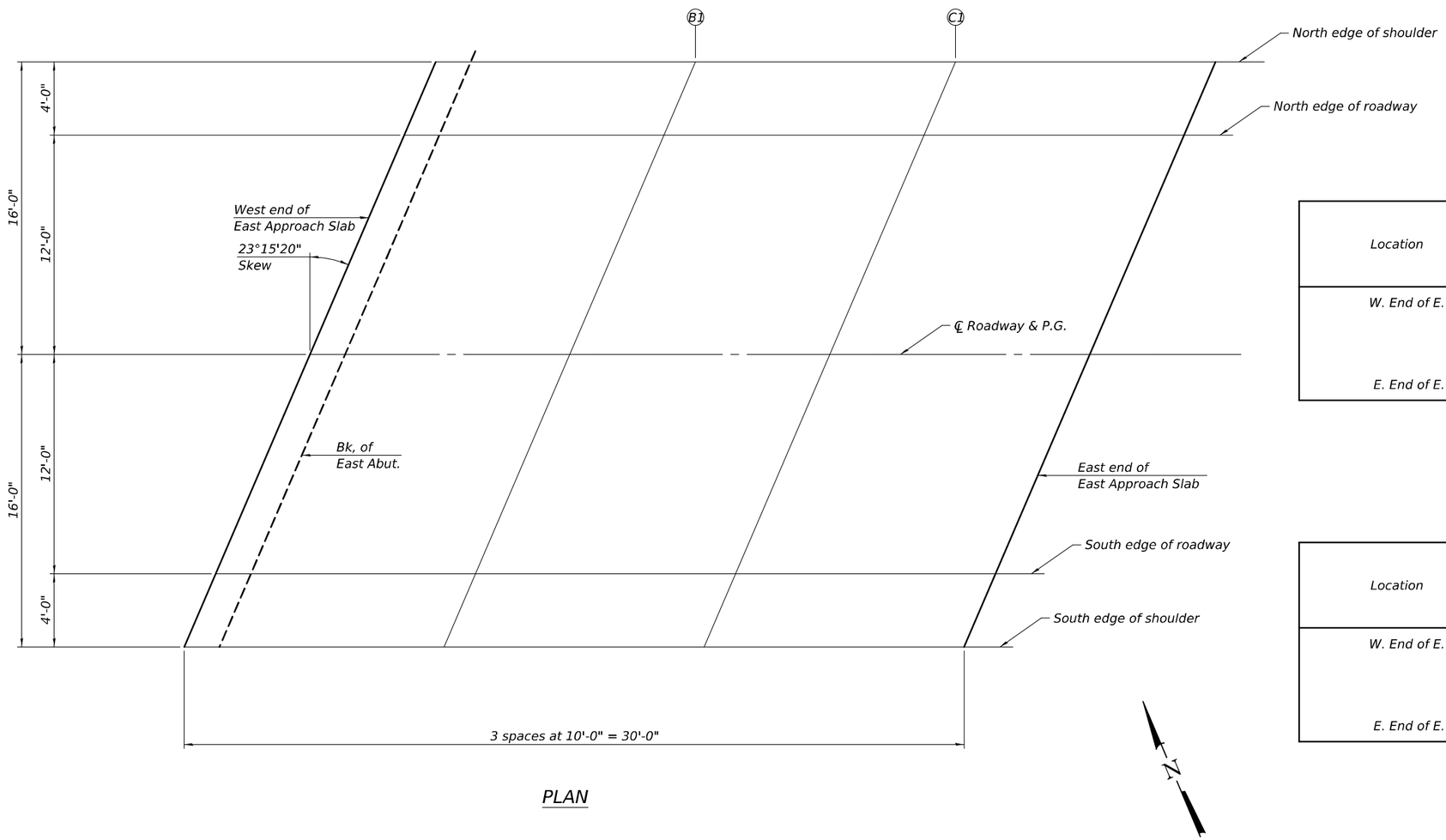

PLAN

SOUTH EDGE OF ROADWAY

Location	Station	Offset	Theoretical Grade Elevations	Theoretical Grade Elevations Adjusted For Grinding
W. End of E. Appr.	51+36.09	12.00	722.74	722.76
B1	51+46.09	12.00	722.49	722.51
C1	51+56.09	12.00	722.24	722.26
E. End of E. Appr.	51+66.09	12.00	721.97	721.99

SOUTH EDGE OF SHOULDER

Location	Station	Offset	Theoretical Grade Elevations	Theoretical Grade Elevations Adjusted For Grinding
W. End of E. Appr.	51+34.37	16.00	722.70	722.72
B1	51+44.37	16.00	722.46	722.48
C1	51+54.37	16.00	722.20	722.22
E. End of E. Appr.	51+64.37	16.00	721.94	721.96

MODEL: 0740088-70629-008
FILE NAME: pw://ildot-pw.bentley.com:PWIDOT/Documents/IDOT O ces/Bureau of Bridges and Structures/OBM Projects/0740088/CADData/Bridge/0740088-70629-Design.dgn
10/10/2024 2:21:46 PM

DESIGNED -	DAVID H. RICHTER	EXAMINED	ENGINEER OF BRIDGE DESIGN
CHECKED -	RYAN P. NEGANGARD	PASSED	ENGINEER OF BRIDGES AND STRUCTURES
DRAWN -	GLENN W. STOVER	DATE -	10-10-2024
CHECKED -	D.H.R. / R.P.N.	REVISED -	
		REVISED -	

STATE OF ILLINOIS
DEPARTMENT OF TRANSPORTATION

TOP OF E. APPROACH SLAB ELEVATIONS
STRUCTURE NO. 074-0088

SHEET 8 OF 30 SHEETS

F.A.S. RTE.	SECTION	COUNTY	TOTAL SHEETS	SHEET NO.
1532	74-69BR	PIATT	78	46
		CONTRACT NO. 70629		
		ILLINOIS	FED. AID PROJECT	

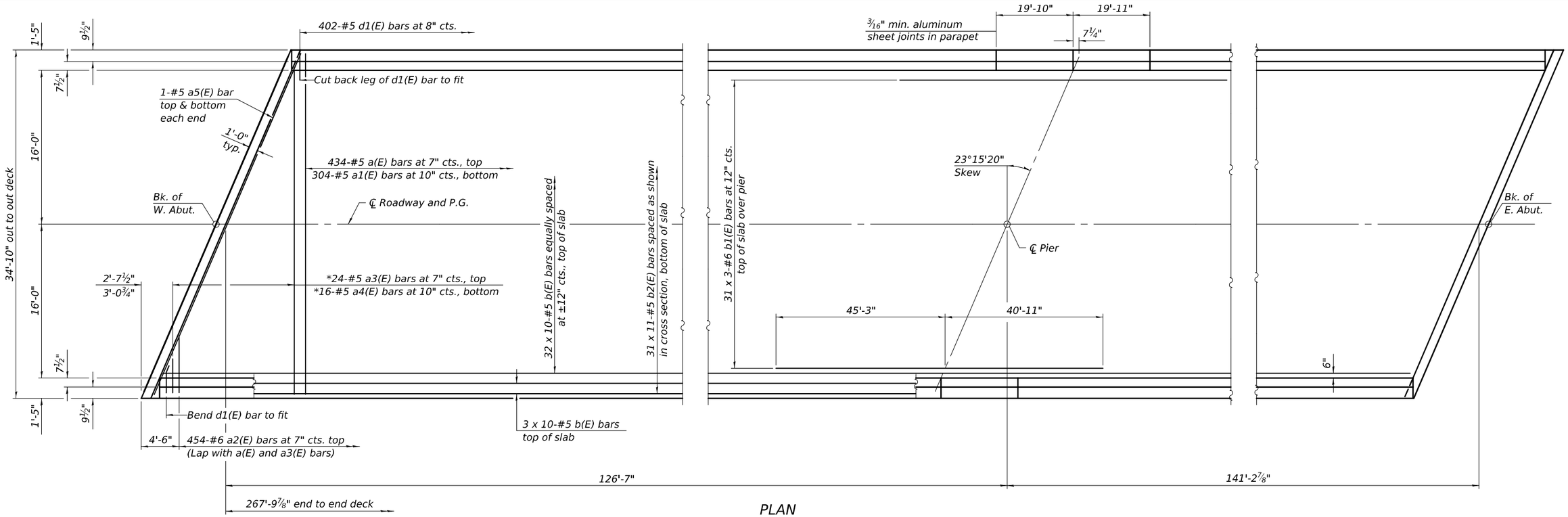

PLAN

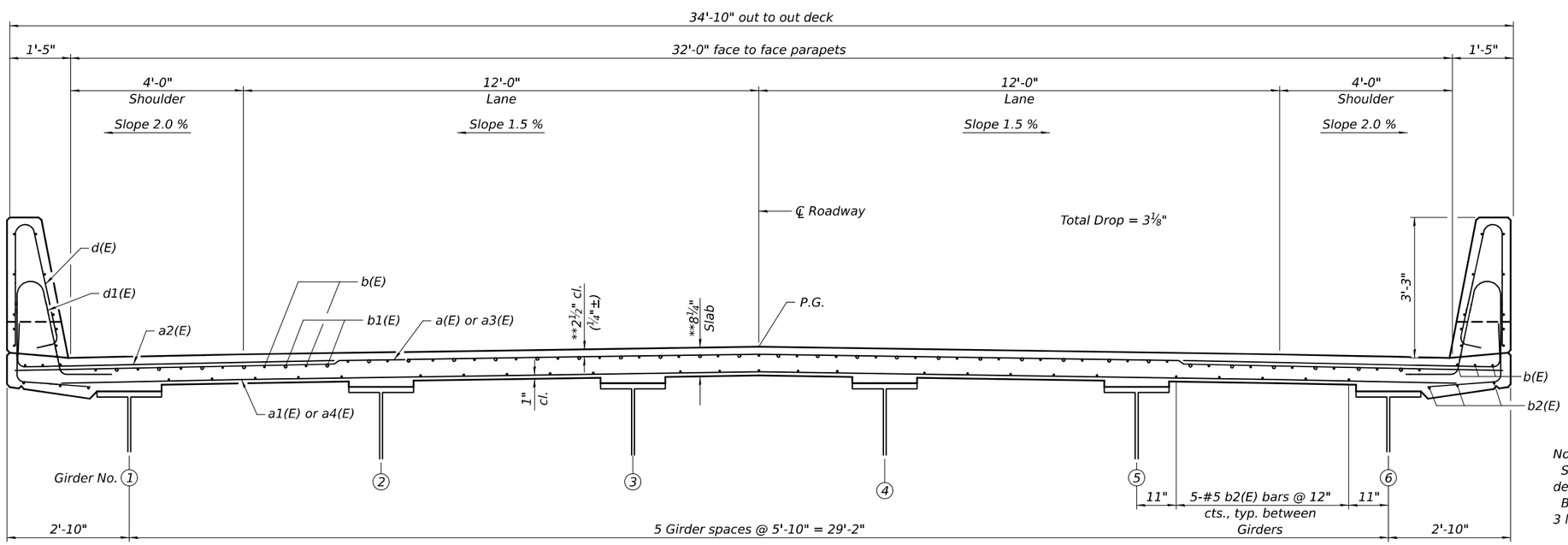

CROSS SECTION

(Looking East)

N

MINIMUM BAR LAP

#5 bar = 3'-6"
#6 bar = 3'-7"

* See Field Cutting Diagram on sheet 11 of 30.
** Prior to grinding

Notes:
See sheets 10 and 11 of 30 for superstructure details and Bill of Material.
Bars indicated thus 3 x 10-#5 etc. indicates 3 lines of bars with 10 lengths per line.

DESIGNED - DAVID H. RICHTER	EXAMINED	DATE - 10-10-2024	STATE OF ILLINOIS DEPARTMENT OF TRANSPORTATION
CHECKED - RYAN P. NEGANGARD	ENGINEER OF BRIDGE DESIGN		
DRAWN - GLENN W. STOVER	PASSED	REVISED -	
CHECKED - D.H.R. / R.P.N.	ENGINEER OF BRIDGES AND STRUCTURES	REVISED -	

SUPERSTRUCTURE
STRUCTURE NO. 074-0088

SHEET 9 OF 30 SHEETS

F.A.S. RTE.	SECTION	COUNTY	TOTAL SHEETS	SHEET NO.
1532	74-69BR	PIATT	78	47

CONTRACT NO. 70629

ILLINOIS | FED. AID PROJECT

MODEL: 0740088-70629-009
FILE NAME: pw://ildot-pw.bentley.com:PWIDOT/Documents/IDOT O ces/Bureau of Bridges and Structures/OBM Projects/0740088/CADData/Bridge/0740088-70629-Design.dgn
10/10/2024 2:21:46 PM

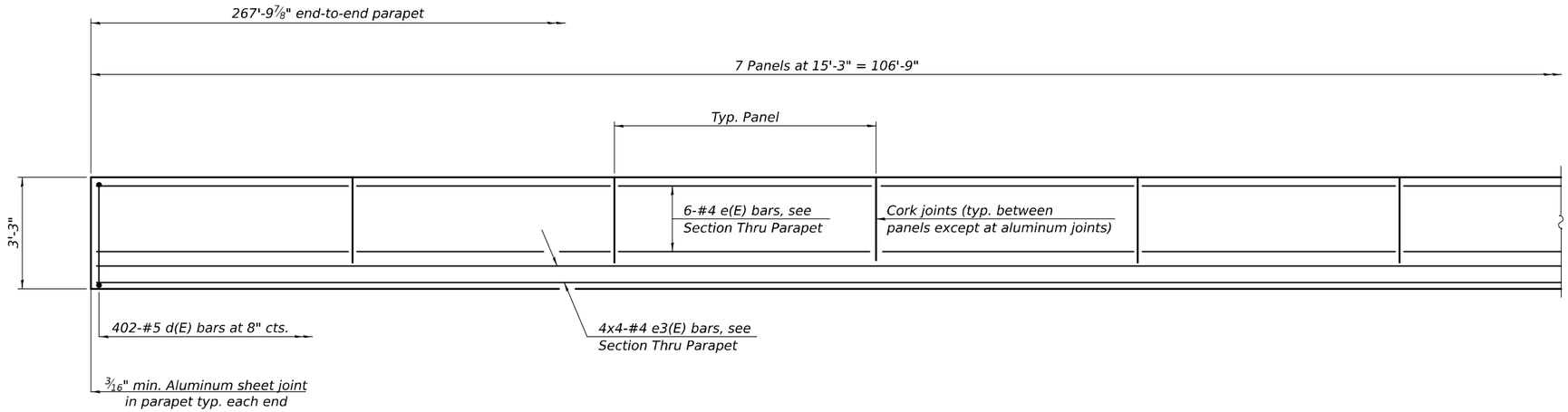

MINIMUM BAR LAP

#4 bar = 2'-5"

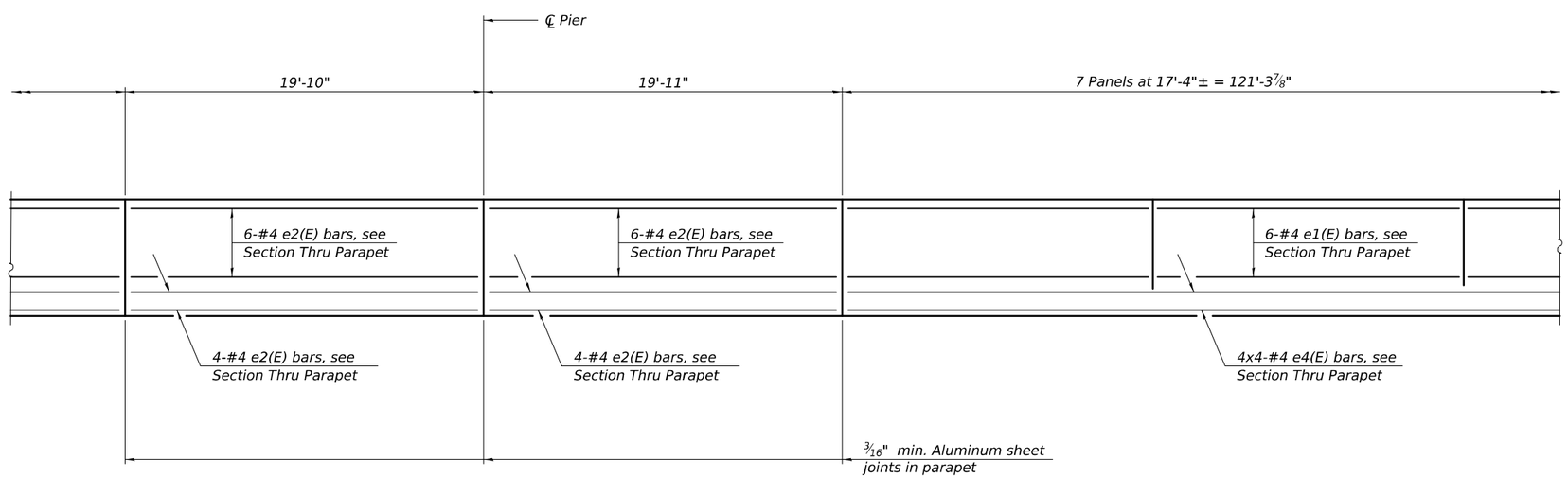

INSIDE ELEVATION OF PARAPET

MODEL: 0740088-70629-010
FILE NAME: pw://ildot-pw.bentley.com:PWIDOT/Documents/IDOT Offices/Bureau of Bridges and Structures/OBM Projects/0740088/CADData/Bridge/0740088-70629-Design.dgn
10/10/2024 2:21:47 PM

DESIGNED - DAVID H. RICHTER	EXAMINED	DATE - 10-10-2024	STATE OF ILLINOIS DEPARTMENT OF TRANSPORTATION
CHECKED - RYAN P. NEGANGARD	ENGINEER OF BRIDGE DESIGN		
DRAWN - GLENN W. STOVER	PASSED	REVISED -	
CHECKED - D.H.R. / R.P.N.	ENGINEER OF BRIDGES AND STRUCTURES	REVISED -	

SUPERSTRUCTURE DETAILS
STRUCTURE NO. 074-0088

SHEET 10 OF 30 SHEETS

F.A.S. RTE.	SECTION	COUNTY	TOTAL SHEETS	SHEET NO.
1532	74-69BR	PIATT	78	48

CONTRACT NO. 70629

ILLINOIS FED. AID PROJECT

Notes:

The 3/16" min. aluminum sheet shall be ASTM B 209 alloy 3003-H14 and coated with 5 mils of either bitumen paint or epoxy paint to minimize reaction with wet concrete. Cost included with Concrete Superstructure.

The polyurethane sealant shall be according to Article 1050.04 of the Std. Spec. and the color shall be gray.

Bar terminators, paid for separately. See Total Bill of Material.

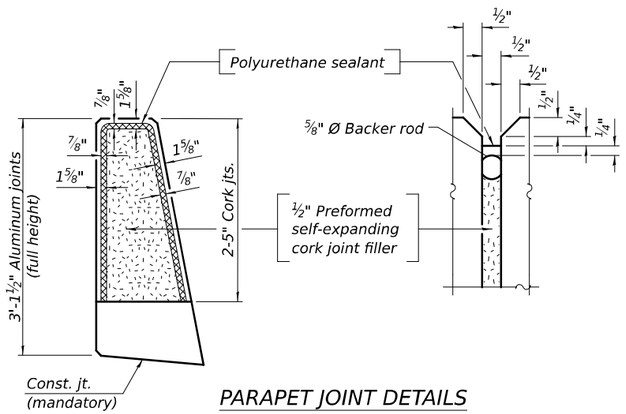

PARAPET JOINT DETAILS

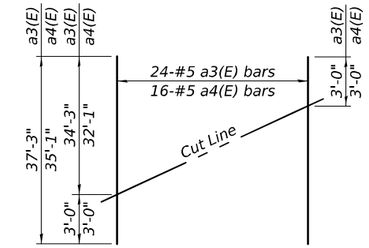

FIELD CUTTING DIAGRAM

Order a3(E) and a4(E) bars full length. Cut as shown and use remainder of bars in opposite end of deck.

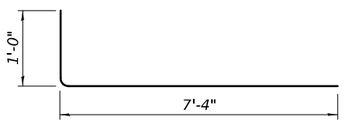

BAR a2(E)

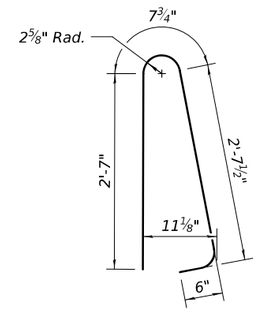

BAR d(E)

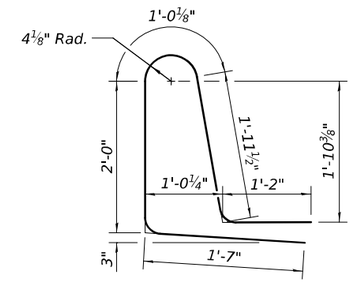

BAR d1(E)

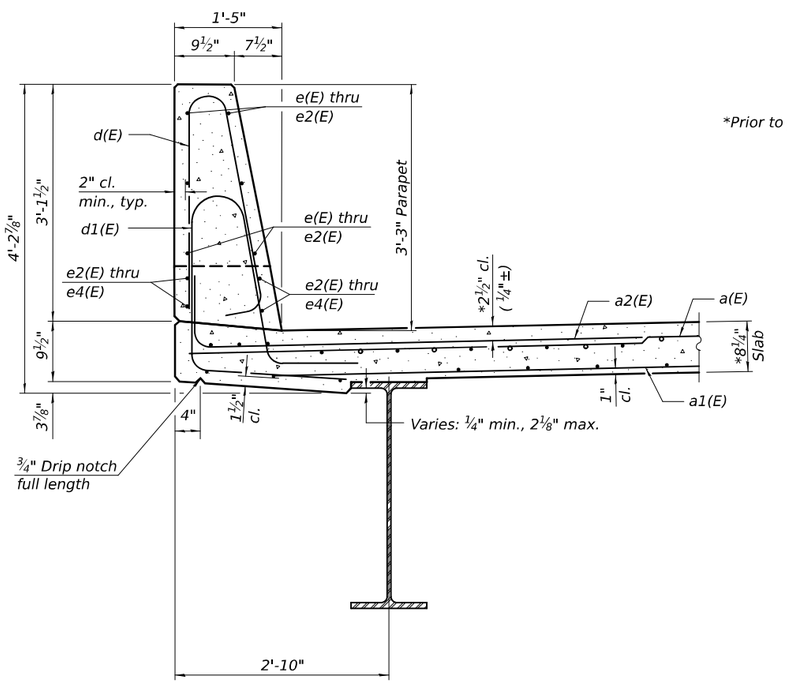

*Prior to grinding

SECTION THRU PARAPET

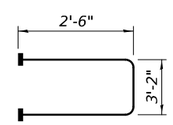

BAR s10(E)

(Headed. 124-#5 Bar terminators)

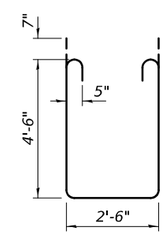

BAR s11(E)

SUPERSTRUCTURE BILL OF MATERIAL

Bar	No.	Size	Length	Shape
a(E)	434	#5	34'-6"	
a1(E)	304	#5	32'-10"	
a2(E)	908	#6	8'-4"	
a3(E)	24	#5	37'-3"	
a4(E)	16	#5	35'-1"	
a5(E)	4	#5	37'-7"	
b(E)	380	#5	29'-11"	
b1(E)	93	#6	31'-2"	
b2(E)	341	#5	27'-6"	
d(E)	804	#5	6'-5"	
d1(E)	804	#5	7'-9"	
e(E)	84	#4	14'-11"	
e1(E)	84	#4	17'-0"	
e2(E)	40	#4	19'-7"	
e3(E)	32	#4	28'-6"	
e4(E)	32	#4	32'-1"	
m10(E)	10	#6	37'-7"	
m11(E)	40	#6	6'-0"	
m12(E)	16	#6	2'-9"	
s10(E)	62	#5	8'-2"	
s11(E)	62	#5	12'-8"	
Reinforcement Bars, Epoxy Coated			Pound	82,890
Concrete Superstructure			Cu. Yd.	367.2

MODEL: 0740088-70629-011
FILE NAME: pw://ildot-pw.bentley.com:PWIDOT/Documents/IDOT Offices/Bureau of Bridges and Structures/OBM Projects/0740088/CADData/Bridge/0740088-70629-Design.dgn
10/10/2024 2:21:47 PM

DESIGNED -	DAVID H. RICHTER	EXAMINED	ENGINEER OF BRIDGE DESIGN
CHECKED -	RYAN P. NEGANGARD	PASSED	ENGINEER OF BRIDGES AND STRUCTURES
DRAWN -	GLENN W. STOVER	DATE -	10-10-2024
CHECKED -	D.H.R. / R.P.N.	REVISED -	
		REVISED -	

STATE OF ILLINOIS
DEPARTMENT OF TRANSPORTATION

SUPERSTRUCTURE DETAILS
STRUCTURE NO. 074-0088

SHEET 11 OF 30 SHEETS

F.A.S. RTE.	SECTION	COUNTY	TOTAL SHEETS	SHEET NO.
1532	74-69BR	PIATT	78	49

CONTRACT NO. 70629

ILLINOIS | FED. AID PROJECT

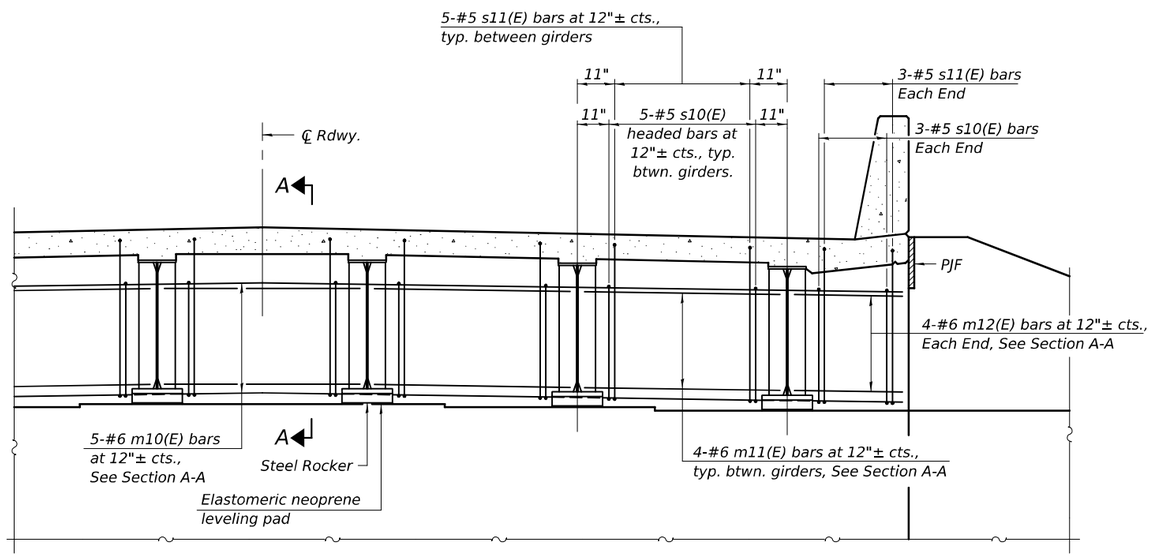

DIAPHRAGM AT ABUTMENT

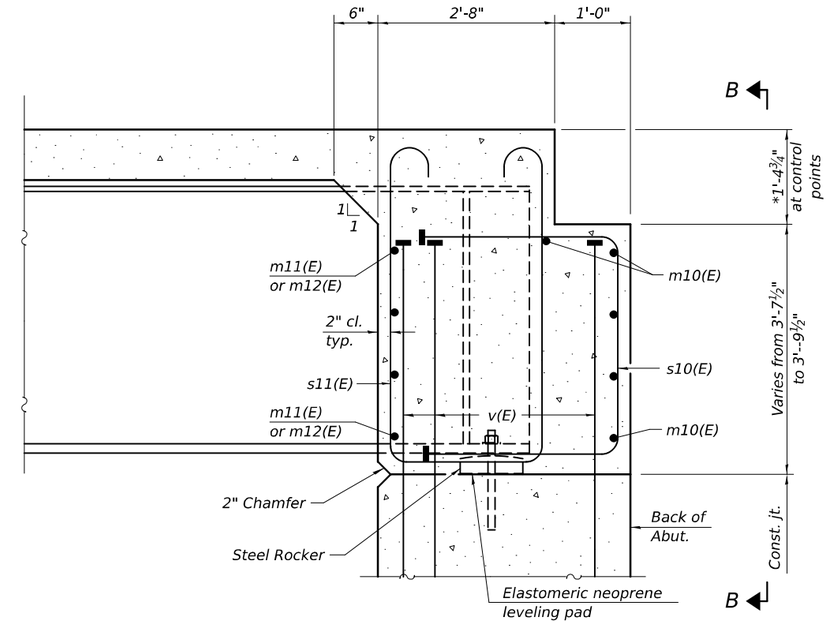

SECTION A-A
(at Rt. ∠'s)

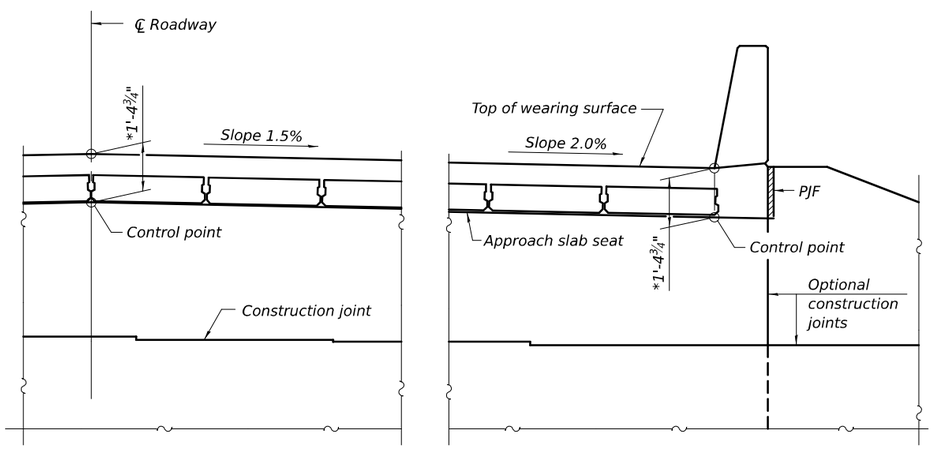

VIEW B-B

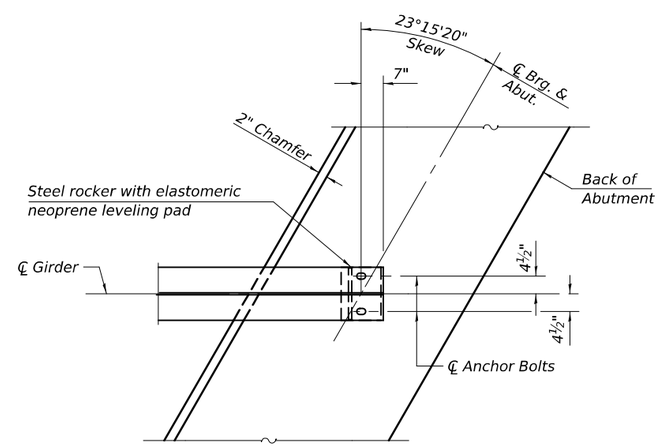

PLAN AT ABUTMENT
(Showing bottom flange of beam)

*Prior to grinding

Notes:
See sheets 10 and 11 of 30 for superstructure details and Bill of Material.
See sheet 13 of 30 for PJF details.
The s10(E) and s11(E) bars shall be placed parallel to the beams. Spacing for these bars shall be at right angles to the beams.
The approach slab seat shall have a constant slope determined from the control points shown.

DESIGNED - DAVID H. RICHTER	EXAMINED	DATE - 10-10-2024	STATE OF ILLINOIS DEPARTMENT OF TRANSPORTATION
CHECKED - RYAN P. NEGANGARD	ENGINEER OF BRIDGE DESIGN		
DRAWN - GLENN W. STOVER	PASSED	REVISED -	
CHECKED - D.H.R. / R.P.N.	ENGINEER OF BRIDGES AND STRUCTURES	REVISED -	

DIAPHRAGM DETAILS
STRUCTURE NO. 074-0088
SHEET 12 OF 30 SHEETS

F.A.S. RTE.	SECTION	COUNTY	TOTAL SHEETS	SHEET NO.
1532	74-69BR	PIATT	78	50

CONTRACT NO. 70629
ILLINOIS FED. AID PROJECT

MODEL: 0740088-70629-012
FILE NAME: pw://ildot-pw.bentley.com:PWIDOT/Documents/IDOT O ces/Bureau of Bridges and Structures/OBM Projects/0740088/CADData/Bridge/0740088-70629-Design.dgn
10/10/2024 2:21:47 PM

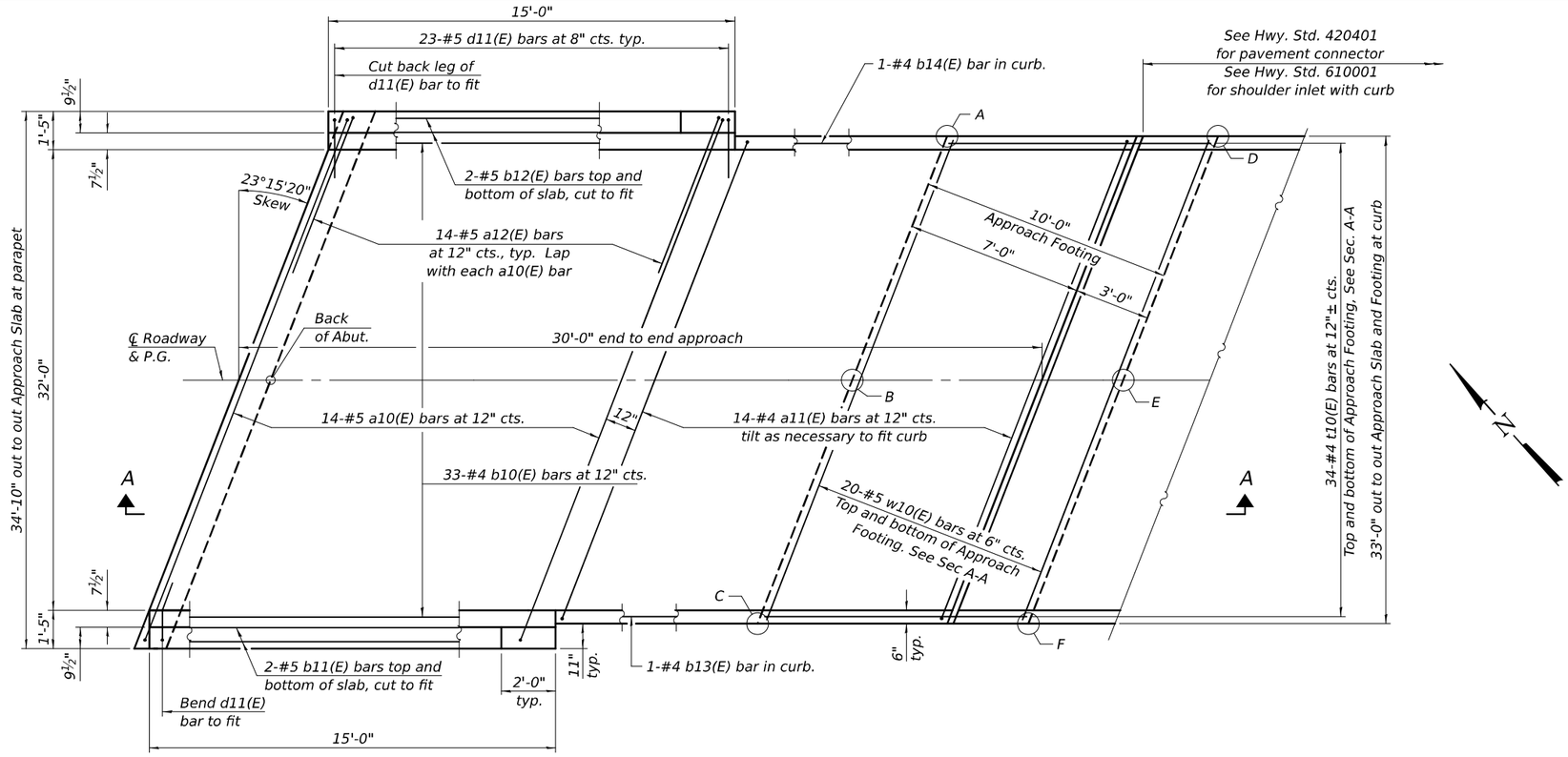

PLAN

(East approach slab shown; West approach slab similar by 180° rotation)

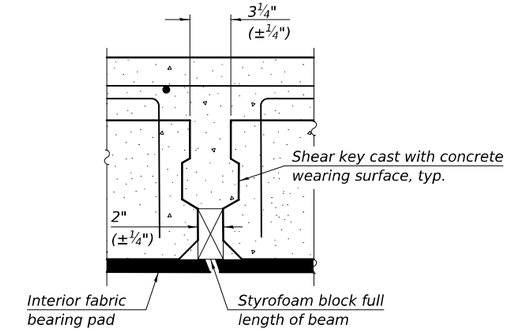

DETAIL 'A'

TOP AND BOTTOM ELEVATIONS FOR APPROACH FOOTING

West Approach			East Approach		
Point/ Location	Top	Bottom	Point/ Location	Top	Bottom
A - SE	725.13	724.30	A - NW	720.38	719.55
B - E ℄	725.39	724.55	B - W ℄	720.84	720.01
C - NE	725.10	724.26	C - SW	720.76	719.93
D - SW	725.15	724.32	D - NE	720.08	719.25
E - W ℄	725.41	724.58	E - E ℄	720.55	719.72
F - NW	725.13	724.29	F - SE	720.47	719.64

* Fabric bearing pads at the expansion end shall be recessed ¼" into the approach footing and bonded. Adjusting shims, when required, shall be bonded to the top of the fabric bearing pads.

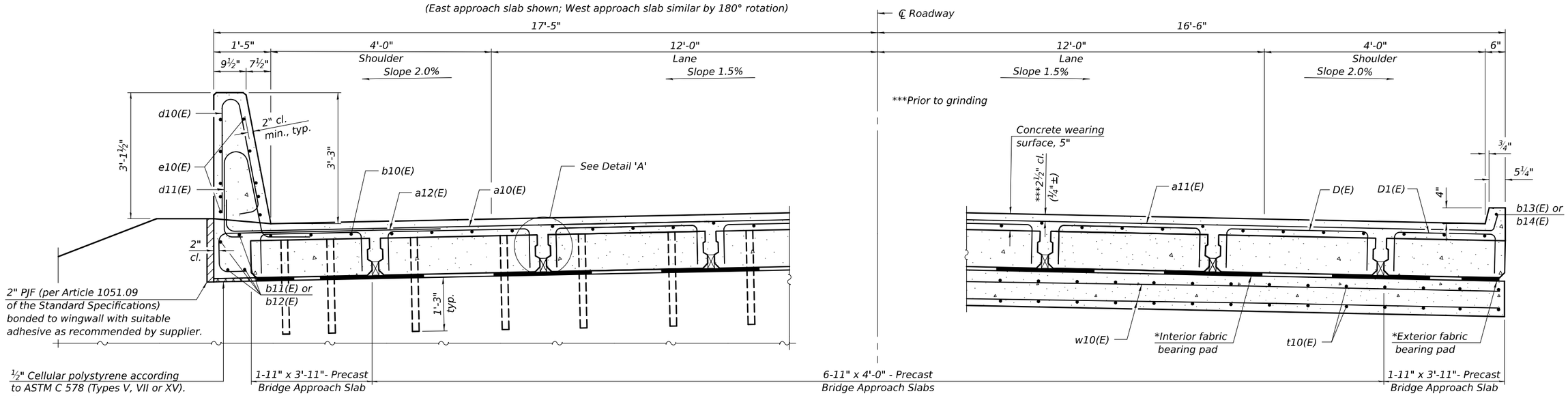

NEAR ABUTMENT

AT APPROACH FOOTING

CROSS SECTION

(Looking East)

(Beams: 36" min. width; 72" max. width)

(Sheet 1 of 3)

DESIGNED - DAVID H. RICHTER	EXAMINED	DATE - 10-10-2024	
CHECKED - RYAN P. NEGANGARD	ENGINEER OF BRIDGE DESIGN	REVISED -	
DRAWN - GLENN W. STOVER	PASSED	REVISED -	
CHECKED - D.H.R. / R.P.N.	ENGINEER OF BRIDGES AND STRUCTURES		

STATE OF ILLINOIS
DEPARTMENT OF TRANSPORTATION

PRECAST BRIDGE APPROACH SLAB
STRUCTURE NO. 074-0088

SHEET 13 OF 30 SHEETS

F.A.S. RTE.	SECTION	COUNTY	TOTAL SHEETS	SHEET NO.
1532	74-69BR	PIATT	78	51

CONTRACT NO. 70629

ILLINOIS | FED. AID PROJECT

MODEL: 0740088-70629-013
FILE NAME: pw://ildot-pw.bentley.com:PWIDOT/Documents/IDOT O ces/Bureau of Bridges and Structures/OBM Projects/0740088/CADData/Bridge/0740088-70629-Design.dgn

10/10/2024 2:21:48 PM

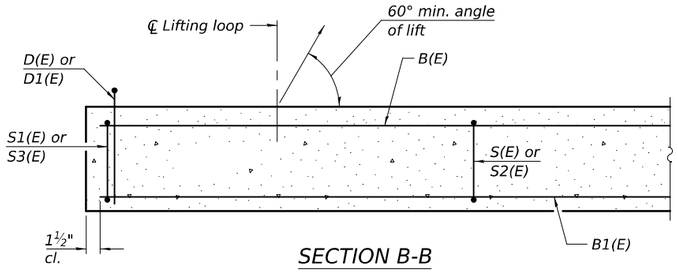

SECTION B-B

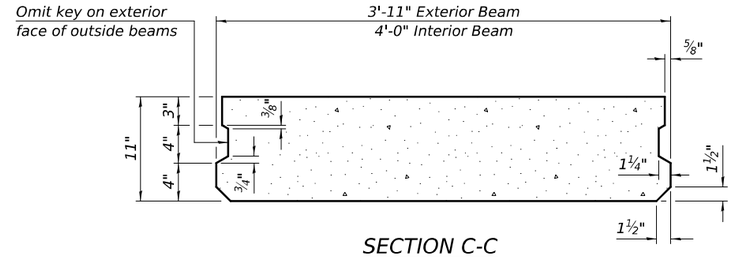

SECTION C-C
(Showing dimensions)

Notes:
The precast bridge approach slab shall be according to Section 504 of the Standard Specifications and shall be paid for at the contract unit price per square foot for Precast Bridge Approach Slab.
Cast-in-place substitution of Precast Bridge Approach Slab is not allowed.
The top surface of precast bridge approach slabs shall be finished similar to precast prestressed deck beams with concrete wearing surface as specified in the IDOT "Manual for Fabrication of Precast Prestressed Concrete Products."
Two ⅛" fabric adjusting shims of the dimensions of the exterior bearing pad shall be provided for each bearing pad location. Cost included with Precast Bridge Approach Slab.
A minimum 2½" Ø lifting pins shall be used to engage the lifting loops during handling.
Compressive strength of precast concrete, f'c shall be 6,000 psi.
Compressive strength of precast concrete during initial lifting, f'ci shall be 5,000 psi.

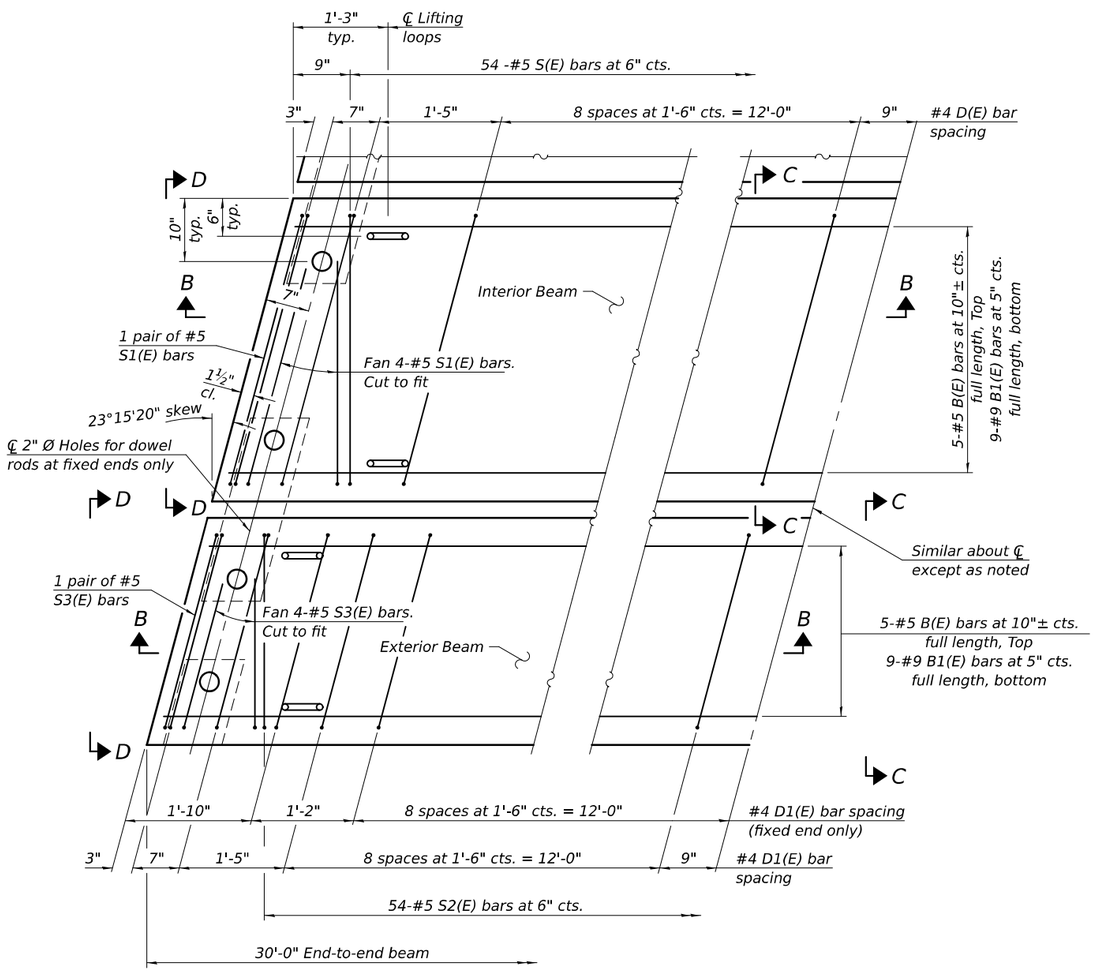

PLAN VIEW
(showing precast bridge approach beams)
(Spacing of D(E) and D1(E) bars may be adjusted up to 3" to miss the dowel rod holes and the lifting loops at the beam ends)

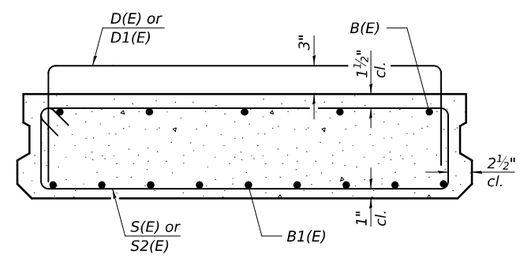

SECTION C-C
(Showing reinforcement)

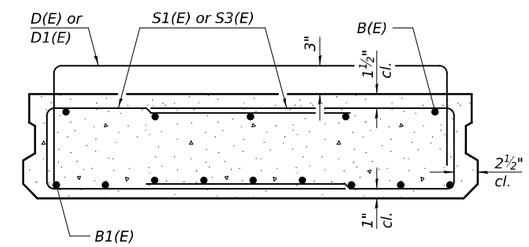

VIEW D-D
(Showing reinforcement)

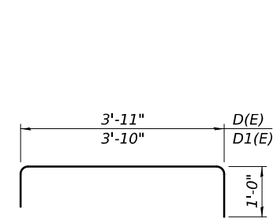

BARS D(E) & D1(E)

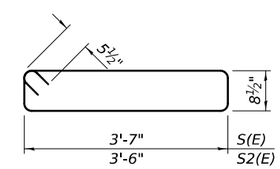

BARS S(E) & S2(E)

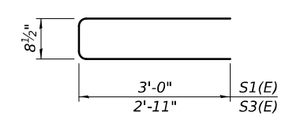

BARS S1(E) & S3(E)

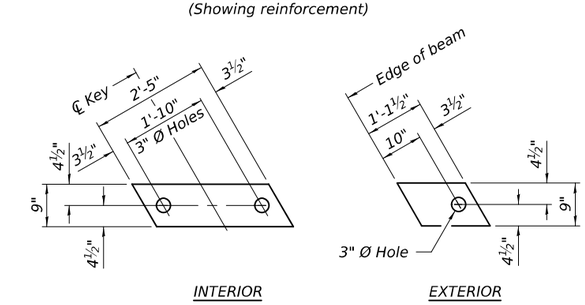

FABRIC BEARING PAD

Notes:
Bearing pads at fixed end shall be ½" thick and bearing pads at expansion end shall be ¾" thick.
Omit holes for fabric bearing pads at approach slab footing end of beams.

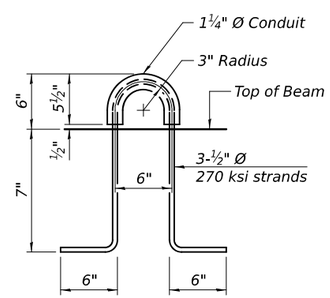

LIFTING LOOP DETAIL
(An alternate lifting loop with a proof load of 25,000 lbs. and utilized according to the manufacturer's recommendations may be used)

BAR LIST
EACH INTERIOR BEAM
(For information only)

Bar	No.	Size	Length	Shape
B(E)	5	#5	29'-8"	—
B1(E)	9	#9	29'-8"	—
D(E)	22	#4	5'-11"	⊓
S(E)	54	#5	9'-6"	▭
S1(E)	12	#5	6'-9"	▭

BAR LIST
EACH EXTERIOR BEAM
(For information only)

Bar	No.	Size	Length	Shape
B(E)	5	#5	29'-8"	—
B1(E)	9	#9	29'-8"	—
D1(E)	32	#4	5'-10"	⊓
S2(E)	54	#5	9'-4"	▭
S3(E)	12	#5	6'-7"	▭

BA-PDP-39CS-L(≤30°) 03-08-2024
(Beams: 36" min. width; 72" max. width)

(Sheet 2 of 3)

DESIGNED - DAVID H. RICHTER	EXAMINED	DATE - 10-10-2024	
CHECKED - RYAN P. NEGANGARD	ENGINEER OF BRIDGE DESIGN		
DRAWN - GLENN W. STOVER	PASSED	REVISED -	
CHECKED - D.H.R. / R.P.N.	ENGINEER OF BRIDGES AND STRUCTURES	REVISED -	

STATE OF ILLINOIS
DEPARTMENT OF TRANSPORTATION

PRECAST BRIDGE APPROACH SLAB
STRUCTURE NO. 074-0088

SHEET 14 OF 30 SHEETS

F.A.S. RTE.	SECTION	COUNTY	TOTAL SHEETS	SHEET NO.
1532	74-69BR	PIATT	78	52

CONTRACT NO. 70629
ILLINOIS FED. AID PROJECT

MODEL: 0740088-70629-014
FILE NAME: pw://ildot-pw.bentley.com:PWIDOT/Documents/IDOT Offices/Bureau of Bridges and Structures/OBM Projects/0740088/CADData/Bridge/0740088-70629-Design.dgn
10/10/2024 2:21:48 PM

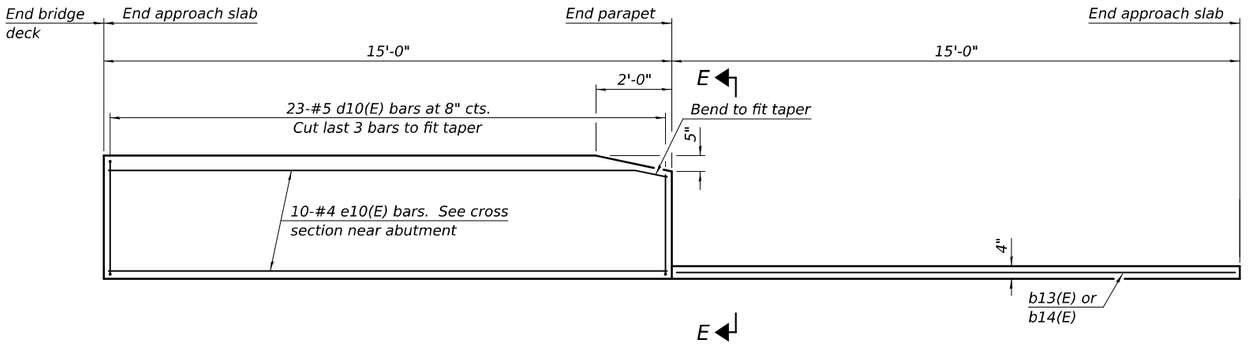

INSIDE ELEVATION OF PARAPET AND CURB

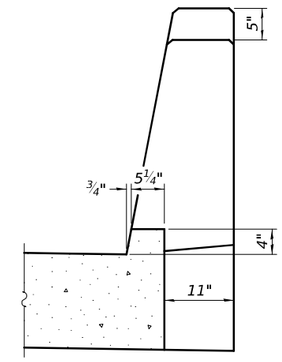

VIEW E-E

Notes:

The joint opening shall be adjusted for temperature per Article 520.04 of the Standard Specifications. However, since this detail is for jointless structures, the length of bridge used to calculate the adjustment shall be equal to half the total bridge length plus the length of the bridge approach slab.

After precast bridge approach slabs have been erected, holes shall be drilled into abutment and anchor dowels placed. Dowel holes shall be filled with non-shrink grout to top of precast slab and cured according to Article 1020.13(a)(3) or 1020.13(a)(5) of the Standard Specifications for a minimum of 24 hours before casting the shear keys and wearing surface.

Any concrete poured monolithically with the wearing surface, such as curbs, shall not be paid for separately, but will be included in the cost of Concrete Wearing Surface, 5".

Parapet concrete shall be paid for as Concrete Superstructure.

Approach footing concrete shall be paid for as Concrete Structures.

The approach footing maximum applied service bearing pressure (Qmax) = 2.0 ksf.

Cost of excavation for approach footing included with Concrete Structures.

For Granular Backfill for Structures and drainage treatment details, see sheet 2 of 30.

Cost of cellular polystyrene is included with Concrete Superstructure.

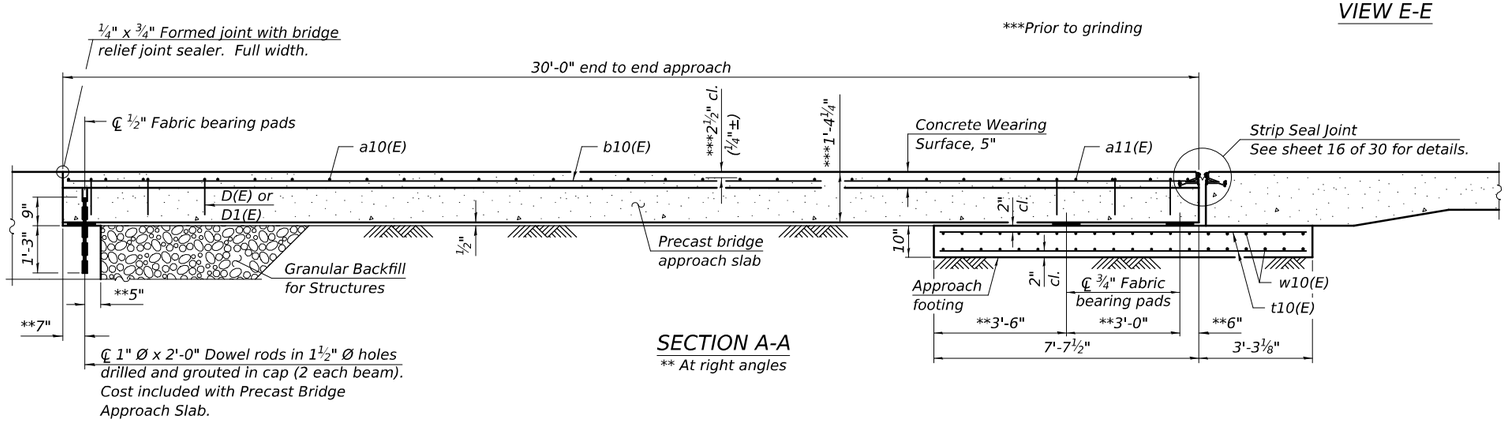

SECTION A-A

** At right angles

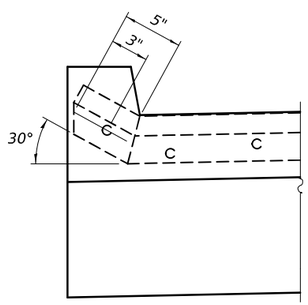

END OF SEAL

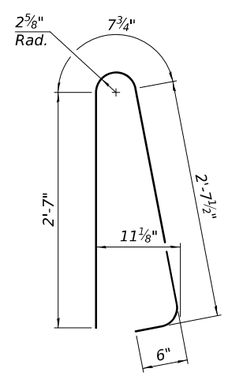

BAR d10(E)

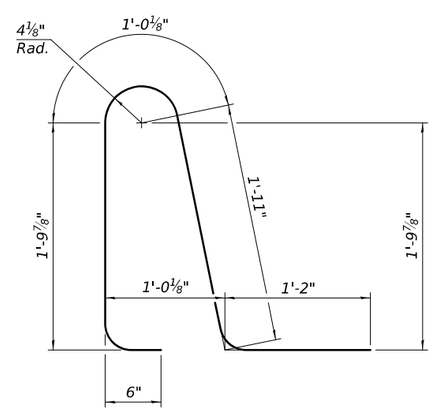

BAR d11(E)

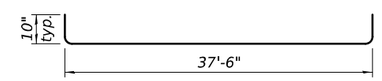

BAR a10(E)

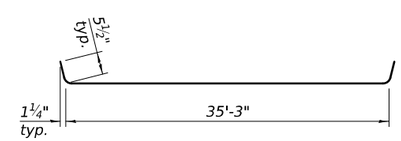

BAR a11(E)

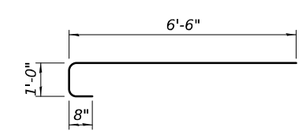

BAR a12(E)

TWO APPROACHES BILL OF MATERIAL

Bar	No.	Size	Length	Shape
a10(E)	28	#5	39'-2"	
a11(E)	28	#4	36'-2"	
a12(E)	56	#5	8'-2"	
b10(E)	66	#4	29'-8"	
b11(E)	8	#5	15'-3"	
b12(E)	8	#5	14'-5"	
b13(E)	2	#4	14'-7"	
b14(E)	2	#4	14'-9"	
d10(E)	92	#5	6'-5"	
d11(E)	92	#5	6'-5"	
e10(E)	40	#4	14'-8"	
t10(E)	136	#4	10'-7"	
w10(E)	80	#5	35'-7"	
Concrete Superstructure			Cu. Yd.	7.8
Concrete Structures			Cu. Yd.	22.2
Reinforcement Bars, Epoxy Coated			Pound	9,450
Precast Bridge Approach Slab			Sq. Ft.	1,910
Concrete Wearing Surface, 5"			Sq. Yd.	226

(Beams: 36" min. width; 72" max. width)

(Sheet 3 of 3)

DESIGNED - DAVID H. RICHTER	EXAMINED	DATE - 10-10-2024	STATE OF ILLINOIS DEPARTMENT OF TRANSPORTATION
CHECKED - RYAN P. NEGANGARD	ENGINEER OF BRIDGE DESIGN		
DRAWN - GLENN W. STOVER	PASSED	REVISED -	
CHECKED - D.H.R. / R.P.N.	ENGINEER OF BRIDGES AND STRUCTURES	REVISED -	

PRECAST BRIDGE APPROACH SLAB
STRUCTURE NO. 074-0088

SHEET 15 OF 30 SHEETS

F.A.S. RTE.	SECTION	COUNTY	TOTAL SHEETS	SHEET NO.
1532	74-69BR	PIATT	78	53
		CONTRACT NO. 70629		
		ILLINOIS	FED. AID PROJECT	

MODEL: 0740088-70629-015
FILE NAME: pw://ildot-pw.bentley.com:PWIDOT/Documents/IDOT Offices/Bureau of Bridges and Structures/OBM Projects/0740088/CADData/Bridge/0740088-70629-Design.dgn
10/10/2024 2:21:48 PM

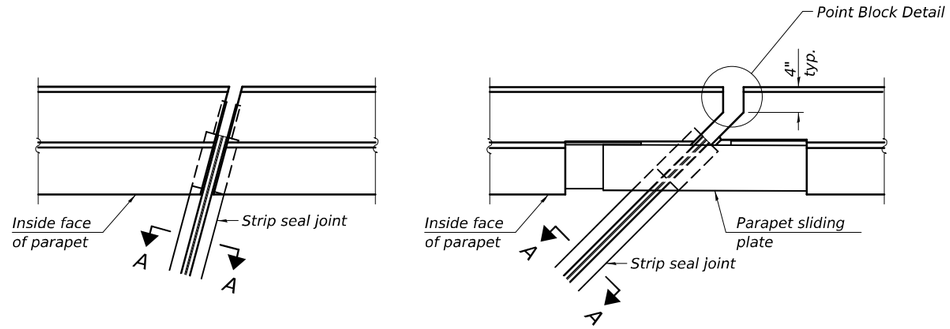

FOR SKEWS ≤ 30°

FOR SKEWS > 30°

PLAN AT PARAPET

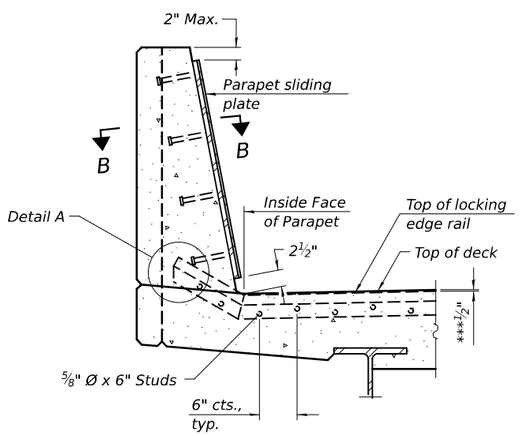

SECTION AT PARAPET

(Skews > 30° shown. Skews ≤ 30° similar except as shown in plan view.)

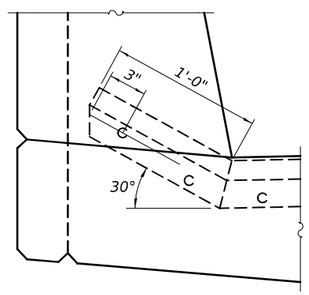

DETAIL A

***Prior to grinding

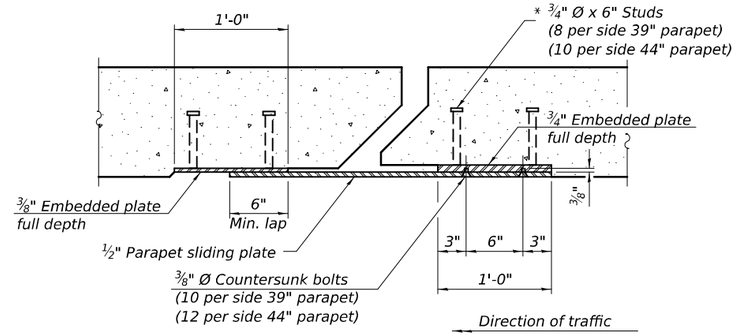

SECTION B-B

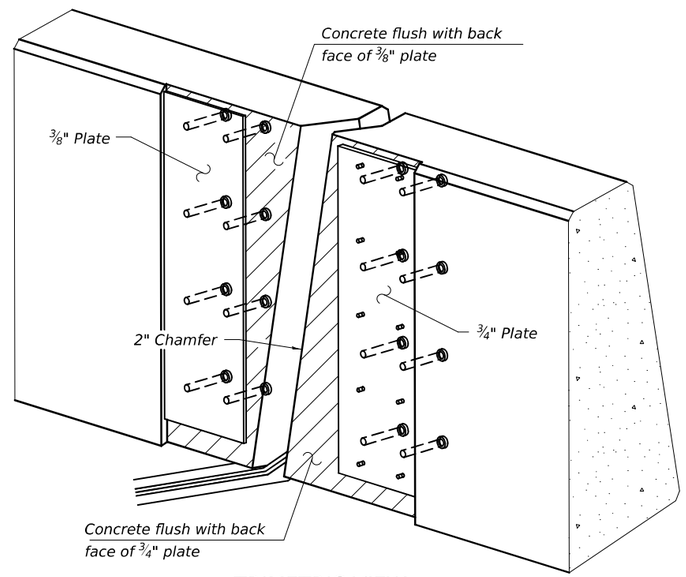

TRIMETRIC VIEW

(Showing embedded plates only)

Notes:

The strip seal shall be made continuous and shall have a minimum thickness of ¼". The configuration of the strip seal shall match the configuration of the locking edge rails. Open or "webbed" strip seal gland configurations are not permitted. The gland shall be sized for a maximum rated movement of 4 inches.

The locking edge rails depicted are configured for typical applications and are conceptual only. The actual configuration of the locking edge rails and matching strip seal may vary from manufacturer to manufacturer provided they fit the application and meet the minimum anchorage shown. Flanged edge rails, however, will not be allowed. Locking edge rails may exceed the 4½" maximum depth provided the anchorage system is revised according to the manufacturer's recommendation.

The manufacturer's recommended installation methods shall be followed.

All steel components shall be galvanized after fabrication according to Article 520.03 of the Standard Specifications.

The Maximum space between locking edge rail segments shall be 3/16" and sealed with a suitable sealant; however, any rail joint within 10' measured perpendicular to the face of the curb or parapet shall be welded as shown in the locking edge rail splice detail.

Cost of parapet sliding plates, embedded plates, and anchorage studs included with Preformed Joint Strip Seal.

39" constant slope barrier shown, 44" constant slope barrier similar as noted.

The concrete opening below the strip seal will vary based on the locking edge rail chosen by the Contractor. Deck and parapet lengths shown elsewhere in the plans are dimensioned to the concrete opening, not the joint opening, and are based on the rolled locking edge rail. If the Contractor elects to use a different locking edge rail, dimensional adjustments may be required. One exception to this would be the strip seal joint at the end of the precast bridge approach slab. For these cases the pavement connector length shall be adjusted, not the length of the bridge approach slab.

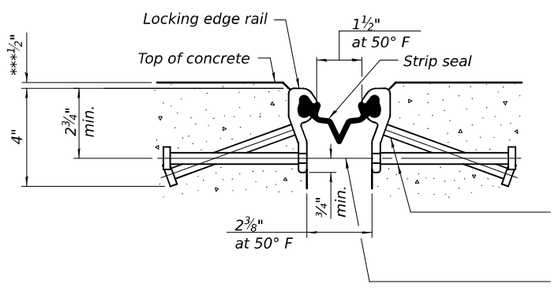

SHOWING ROLLED RAIL JOINT

* ⅝" Ø x 6" studs @ 6" cts. (alternate angled/bent studs with horizontal studs)

⅜" Ø threaded rods in 7/16" Ø holes at 4'-0"± cts. for holding the proper joint opening based on the temperature during the deck pour. Place to miss studs. All rods shall be burned, or sawed off flush with the plates after concrete is set.

SECTION A-A

* Granular or solid flux filled headed studs conforming to Article 1006.32 of the Std. Specs., automatically end welded.

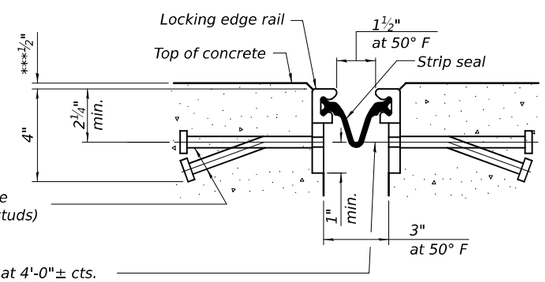

SHOWING WELDED RAIL JOINT

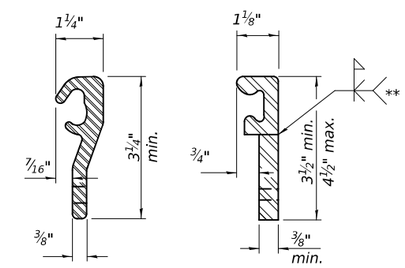

ROLLED (EXTRUDED) RAIL

WELDED RAIL

LOCKING EDGE RAILS

** Back gouge not required if complete joint penetration is verified by mock-up.

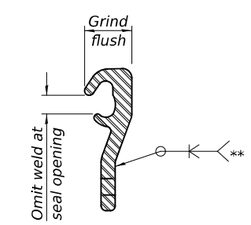

LOCKING EDGE RAIL SPLICE

The inside of the locking edge rail groove shall be free of weld residue. Rolled rail shown, welded rail similar.

BILL OF MATERIAL

Item	Unit	Total
Preformed Joint Strip Seal	Foot	74

EJ-SS 5-15-2023

DESIGNED - DAVID H. RICHTER	EXAMINED	ENGINEER OF BRIDGE DESIGN	DATE - 10-10-2024
CHECKED - RYAN P. NEGANGARD			
DRAWN - GLENN W. STOVER	PASSED	ENGINEER OF BRIDGES AND STRUCTURES	REVISED -
CHECKED - D.H.R. / R.P.N.			REVISED -

STATE OF ILLINOIS
DEPARTMENT OF TRANSPORTATION

PREFORMED JOINT STRIP SEAL DETAILS
STRUCTURE NO. 074-0088

SHEET 16 OF 30 SHEETS

F.A.S. RTE.	SECTION	COUNTY	TOTAL SHEETS	SHEET NO.
1532	74-69BR	PIATT	78	54
		CONTRACT NO. 70629		
	ILLINOIS	FED. AID PROJECT		

MODEL: 0740088-70629-016
FILE NAME: pw://ildot-pw.bentley.com:PWIDOT/Documents/IDOT Offices/Bureau of Bridges and Structures/OBM Projects/0740088/CADData/Bridge/0740088-70629-Design.dgn
10/10/2024 2:21:49 PM

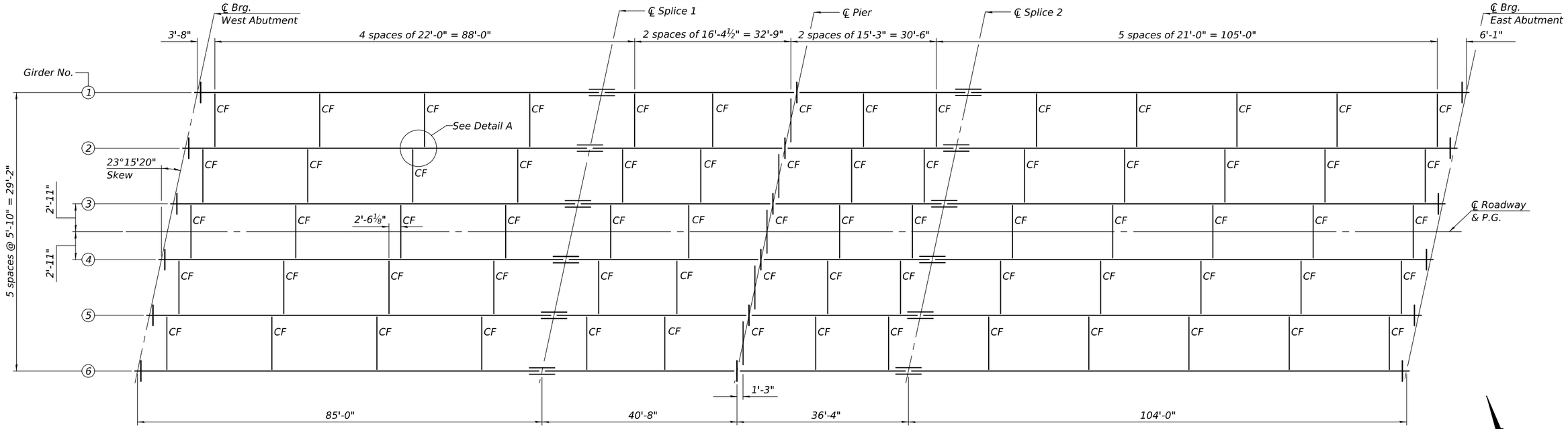

PLAN

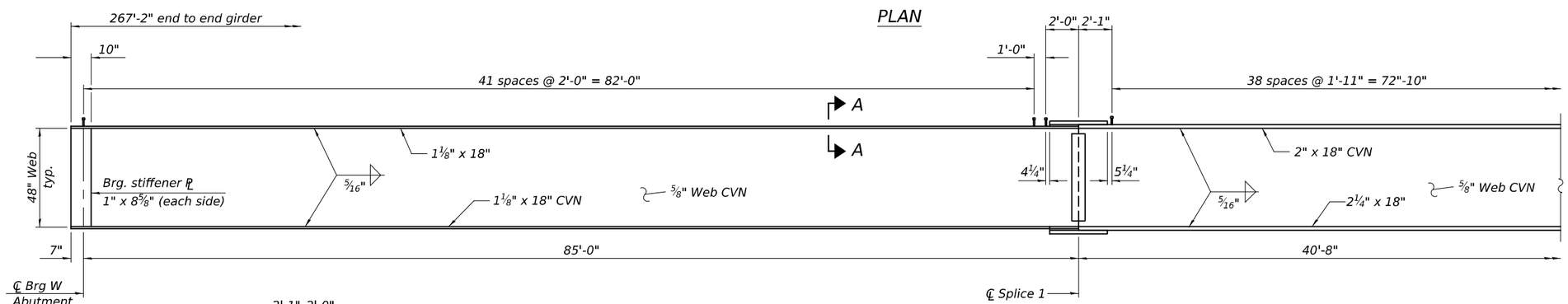

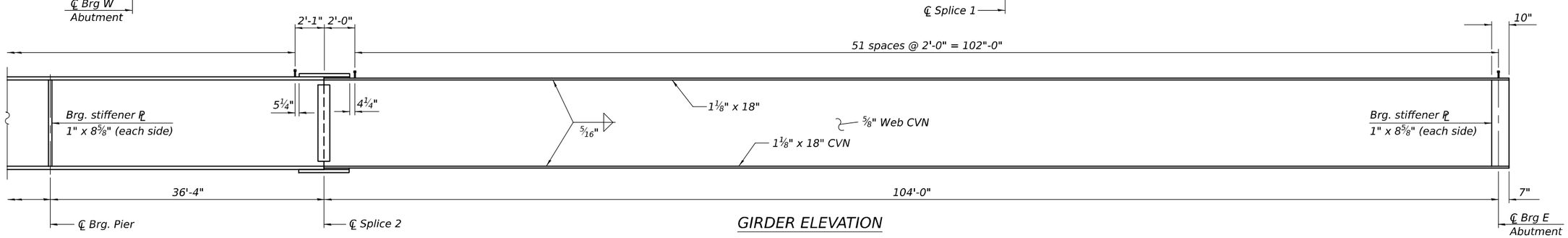

GIRDER ELEVATION

** TOP OF WEB ELEVATION

Location	℄ Brg. W. Abut	℄ Splice 1	℄ Brg. Pier	℄ Splice 2	℄ Brg. E. Abut
Girder 1	725.60	724.84	724.30	723.82	721.61
Girder 2	725.71	724.97	724.44	723.97	721.77
Girder 3	725.81	725.09	724.56	724.10	721.92
Girder 4	725.82	725.11	724.60	724.14	721.98
Girder 5	725.74	725.05	724.55	724.09	721.96
Girder 6	725.65	724.98	724.48	724.03	721.92

*Prior to grinding
**For fabrication use only

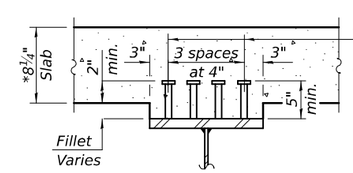

¾" Ø Granular or solid flux filled headed studs, automatically end welded to flange. (3216 Required)

SECTION A-A

Notes:
Load carrying components designated "CVN" shall conform to the Charpy-V-Notch Impact Energy Requirement, Zone 2.
All plate girder flanges, webs, bearing stiffeners, and splice plates, except filler plates, shall be AASHTO M270 Grade 50.

DESIGNED - DAVID H. RICHTER	EXAMINED	DATE - 10-10-2024	STATE OF ILLINOIS DEPARTMENT OF TRANSPORTATION
CHECKED - RYAN P. NEGANGARD	ENGINEER OF BRIDGE DESIGN		
DRAWN - GLENN W. STOVER	PASSED	REVISED -	
CHECKED - D.H.R. / R.P.N.	ENGINEER OF BRIDGES AND STRUCTURES	REVISED -	

STRUCTURAL STEEL
STRUCTURE NO. 074-0088

SHEET 17 OF 30 SHEETS

F.A.S. RTE.	SECTION	COUNTY	TOTAL SHEETS	SHEET NO.
1532	74-69BR	PIATT	78	55

CONTRACT NO. 70629
ILLINOIS FED. AID PROJECT

MODEL: 0740088-70629-017
FILE NAME: pw://ildot-pw.bentley.com:PWIDOT/Documents/IDOT Offices/Bureau of Bridges and Structures/OBM Projects/0740088/CADData/Bridge/0740088-70629-Design.dgn
10/10/2024 2:21:49 PM

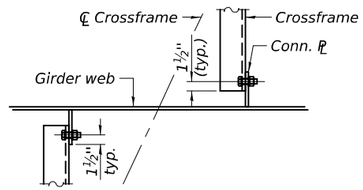

DETAIL A

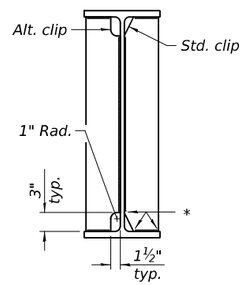

WELD LIMITS AND CLIP DETAILS

* Stop welds ¼" (±⅛") from edges as shown. Typical.

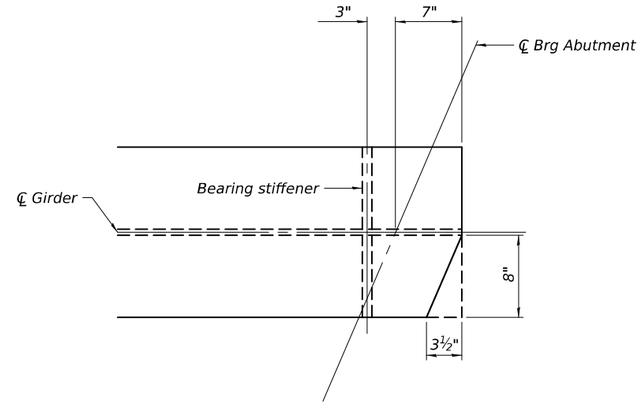

CLIPPING DETAIL

(Top flange of girders at abutments)

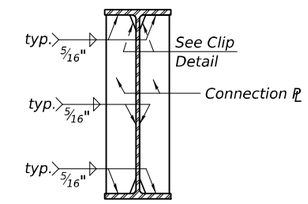

CONNECTION PL DETAIL

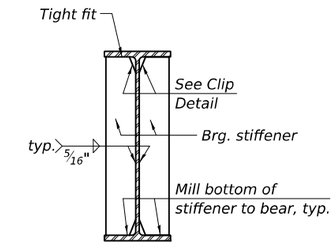

BEARING STIFFENER DETAIL

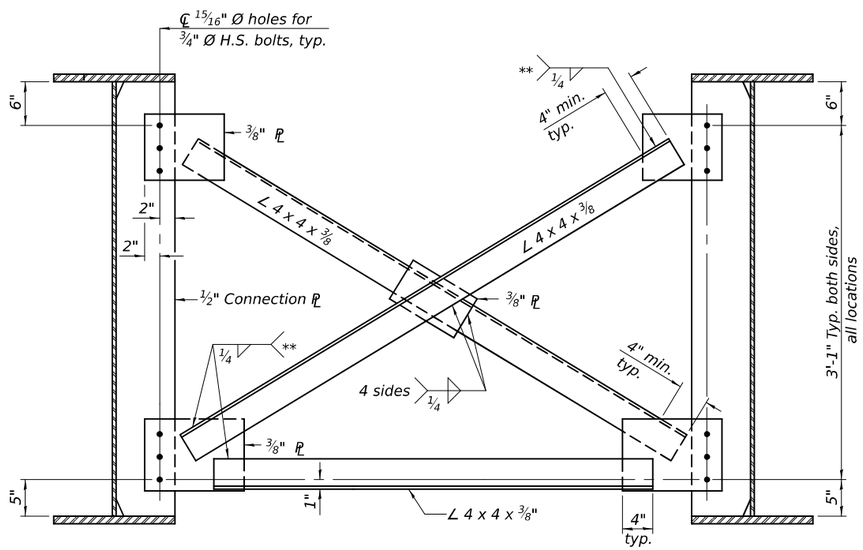

INTERIOR CROSS-FRAME CF

(70 Required)

** Fillet weld angles along 3 sides on one face of gusset typ,

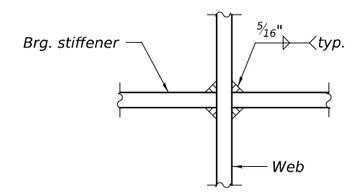

WEB WELD DETAIL

Notes:
Two hardened washers required for each set of oversized holes.
All cross frames shall be installed as steel is erected and secured with erection pins and bolts except as otherwise noted. Individual cross frames at supports may be temporarily disconnected to install bearing anchor bolts.

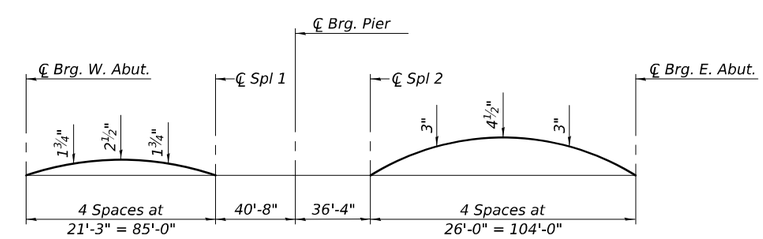

CAMBER DIAGRAM

MODEL: 0740088-70629-018
FILE NAME: pw://ildot-pw.bentley.com:PWIDOT/Documents/IDOT Offices/Bureau of Bridges and Structures/OBM Projects/0740088/CADData/Bridge/0740088-70629-Design.dgn
10/10/2024 2:21:49 PM

DESIGNED - DAVID H. RICHTER	EXAMINED	DATE - 10-10-2024	STATE OF ILLINOIS DEPARTMENT OF TRANSPORTATION
CHECKED - RYAN P. NEGANGARD	ENGINEER OF BRIDGE DESIGN		
DRAWN - GLENN W. STOVER	PASSED	REVISED -	
CHECKED - D.H.R. / R.P.N.	ENGINEER OF BRIDGES AND STRUCTURES	REVISED -	

STRUCTURAL STEEL DETAILS
STRUCTURE NO. 074-0088

SHEET 18 OF 30 SHEETS

F.A.S. RTE.	SECTION	COUNTY	TOTAL SHEETS	SHEET NO.
1532	74-69BR	PIATT	78	56

CONTRACT NO. 70629

ILLINOIS | FED. AID PROJECT

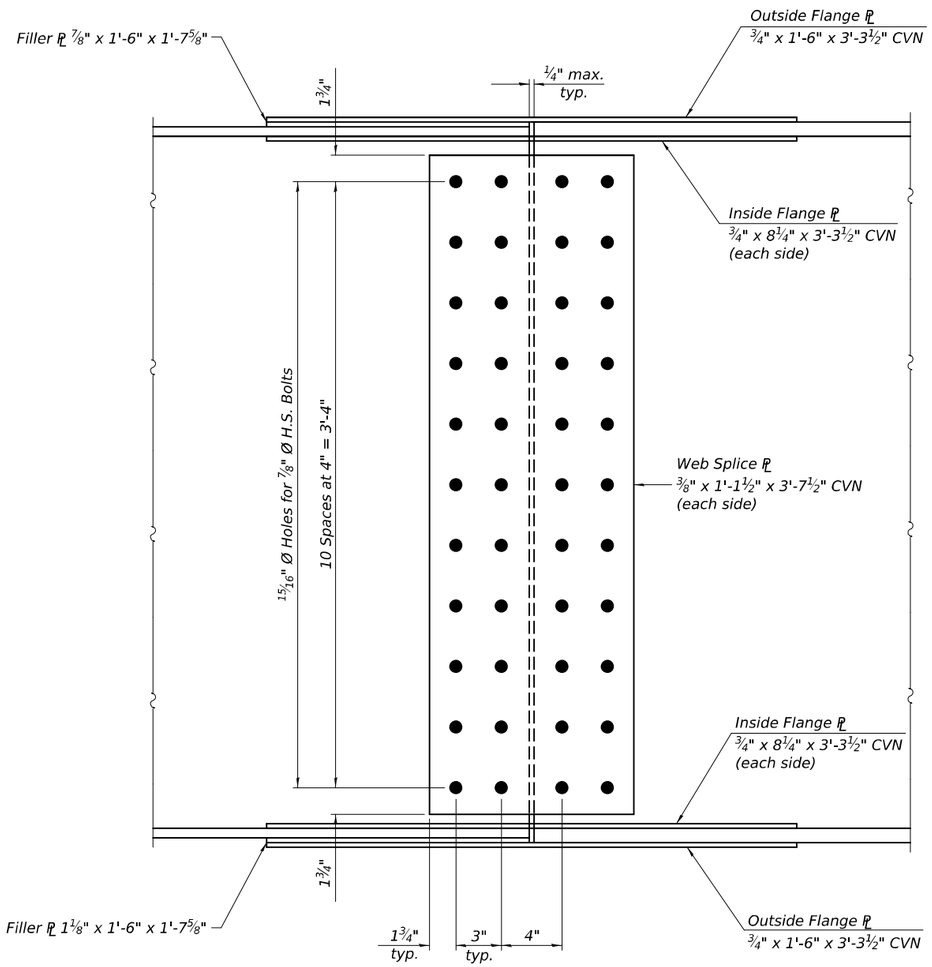

ELEVATION

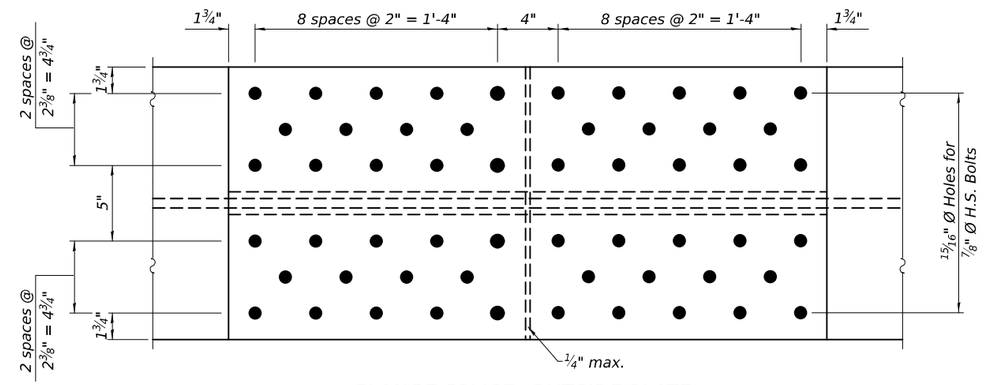

FLANGE SPLICE (OUTSIDE PLATE)

SPLCES 1 and 2

3/4" x 18" x 3'-3 1/2" CVN

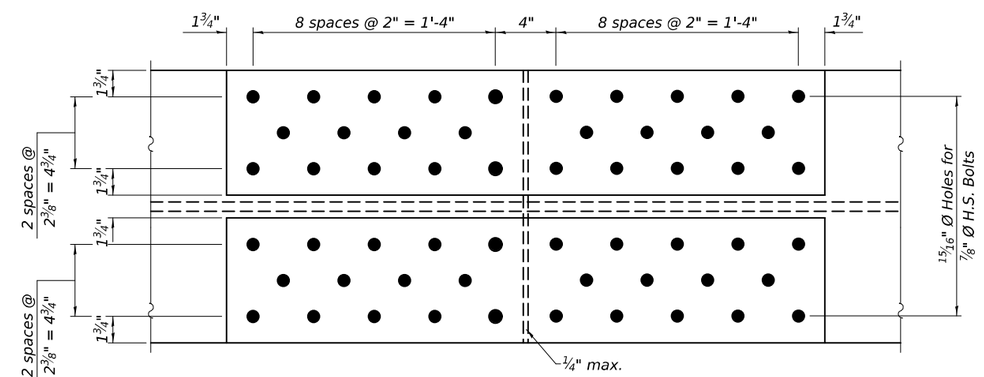

FLANGE SPLICE (INSIDE PLATE)

SPLCES 1 and 2

2-(3/4" x 8 1/4" x 3'-3 1/2") CVN

Note:
Load carrying components designated "CVN" shall conform to the Charpy-V-Notch Impact Energy Requirement, Zone 2.
All splice plates, except fill plates, shall be AASHTO M270, Grade 50

SPLICE DETAILS

(12 Required)

MODEL: 0740088-70629-019
FILE NAME: pw://ildot-pw.bentley.com:PWIDOT/Documents/IDOT Offices/Bureau of Bridges and Structures/OBM Projects/0740088/CADData/Bridge/0740088-70629-Design.dgn

DESIGNED - DAVID H. RICHTER	EXAMINED	ENGINEER OF BRIDGE DESIGN	DATE - 10-10-2024	STATE OF ILLINOIS DEPARTMENT OF TRANSPORTATION	STRUCTURAL STEEL DETAILS STRUCTURE NO. 074-0088
CHECKED - RYAN P. NEGANGARD					
DRAWN - GLENN W. STOVER	PASSED	ENGINEER OF BRIDGES AND STRUCTURES	REVISED -		SHEET 19 OF 30 SHEETS
CHECKED - D.H.R. / R.P.N.			REVISED -		

F.A.S. RTE.	SECTION	COUNTY	TOTAL SHEETS	SHEET NO.
1532	74-69BR	PIATT	78	57
		CONTRACT NO. 70629		
	ILLINOIS	FED. AID PROJECT		

10/10/2024 2:21:50 PM

INTERIOR GIRDER MOMENT TABLE				
		0.4 Sp. 1	Pier	0.6 Sp. 2
I_s	(in^4)	30199	53726	30199
I_c (n)	(in^4)	63453	99475	63453
I_c (3n)	(in^4)	47126	74844	47126
I_c (cr)	(in^4)	———	59491	———
S_s	(in^3)	1202	2137	1202
S_c (n)	(in^3)	1558	2583	1558
S_c (3n)	(in^3)	1424	2389	1424
S_c (cr)	(in^3)	———	2217	———
S_x	(in^3)	1476	2188	1432
DC1	(k/')	0.916	1.056	0.916
M_{DC1}	('k)	775.6	2516.4	1195.1
DC2	(k/')	0.175	0.175	0.175
M_{DC2}	('k)	152.3	448.4	234.2
DW	(k/')	0.292	0.292	0.292
M_{DW}	('k)	254.1	748.2	390.8
LLDF		0.482	0.474	0.467
M_{LL+IM}	('k)	1470.8	1889.9	1601.8
f_f (Strength I)	(ksi)	0	0	0
$M_u + {}^1/_3 f_f S_x$	('k)	4114.9	8135.6	5176.0
$\Phi_f M_n$	('k)	7809.4	———	7757.2
f_s DC1	(ksi)	7.7	14.1	11.9
f_s DC2	(ksi)	1.3	2.4	2.0
f_s DW	(ksi)	2.1	4.0	3.3
f_s (LL+IM)	(ksi)	11.3	10.2	12.3
f_f (Service II)	(ksi)	0	0	0
$f_s + {}^{f_f}/_2$ (Service II)	(ksi)	25.9	33.9	33.2
Service II Resistance	(ksi)	47.5	47.5	47.5
$f_s + {}^{f_f}/_3$ (Strength I)	(ksi)	———	44.7	———
$\Phi_f F_n$	(ksi)	———	50	———
V_f	(k)	33.4	30.2	32.6

GIRDER REACTION TABLE				
		W. Abut.	Pier	E. Abut.
LLDF		0.658	0.658	0.658
OCF		1.084	———	1.088
R_{DC1}	(k)	38.5	169	47
R_{DC2}	(k)	7.4	30	9.1
R_{DW}	(k)	12.4	50.1	15.2
R_{LL}	(k)	71.4	141.8	74.2
R_{IM}	(k)	15.3	25.4	15.5
R_{Total}(Strength I)(Impact)	(k)	227.7	616.5	249.9
R_{Total}(Strength I)(No Impact)	(k)	200.9	572.1	222.8

I_s , S_s : Non-composite moment of inertia and section modulus of the steel section used for computing f_s (Total-Strength I, and Service II) due to non-composite dead loads ($in.^4$ and $in.^3$).

I_c (n), S_c (n): Composite moment of inertia and section modulus of the steel and deck based upon the modular ratio, "n", used for computing f_s (Total-Strength I, and Service II) in uncracked sections due to short-term composite live loads ($in.^4$ and $in.^3$).

I_c (3n), S_c (3n): Composite moment of inertia and section modulus of the steel and deck based upon 3 times the modular ratio, "3n", used for computing f_s (Total-Strength I, and Service II) in uncracked sections, due to long-term composite (superimposed) dead loads ($in.^4$ and $in.^3$).

I_c (cr), S_c (cr): Composite moment of inertia and section modulus of the steel and longitudinal deck reinforcement, used for computing f_s (Total-Strength I and Service II) in cracked sections, due to both short-term composite live loads and long-term composite (superimposed) dead loads ($in.^4$ and $in.^3$).

S_x : Section modulus about the major axis of a section to the controlling flange, tension or compression, taken as yield moment with respect to the controlling flange over the yield strength of the controlling flange ($in.^3$).

DC1: Un-factored non-composite dead load (kips/ft.).

M_{DC1}: Un-factored moment due to non-composite dead load (kip-ft.).

DC2: Un-factored long-term composite (superimposed excluding future wearing surface) dead load (kips/ft.).

M_{DC2}: Un-factored moment due to long-term composite (superimposed excluding future wearing surface) dead load (kip-ft.).

DW: Un-factored long-term composite (superimposed future wearing surface only) dead load (kips/ft.).

M_{DW} : Un-factored moment due to long-term composite (superimposed future wearing surface only) dead load (kip-ft.).

LLDF: Live Load Distribution Factor for moment and shear computed according to Article 4.6.2.2 and further IDOT provisions.

M_{LL+IM}: Un-factored live load moment plus dynamic load allowance (impact) (kip-ft.).

M_u : Strength I load combination of factored design moments (kip-ft.).
$1.25\ (M_{DC1} + M_{DC2}) + 1.5\ M_{DW} + 1.75\ M_{LL+IM}$

f_f : Factored calculated flange lateral bending stress as calculated using Article 6.10.1.6 and as further simplified by IDOT provisions (ksi).

$\Phi_f M_n$: Factored nominal flexural resistance of the section determined as specified in Article 6.10.7.1 or A6 as applicable (kip-ft.).

f_s DC1: Un-factored stress at edge of flange for controlling steel flange due to vertical non-composite dead loads as calculated below (ksi).
M_{DC1} / S_s

f_s DC2: Un-factored stress at edge of flange for controlling steel flange due to vertical composite dead loads as calculated below (ksi).
M_{DC2} / S_c (3n) or M_{DC2} / S_c (cr) as applicable.

f_s DW: Un-factored stress at edge of flange for controlling steel flange due to vertical composite future wearing surface loads as calculated below (ksi).
M_{DW} / S_c (3n) or M_{DW} / S_c (cr) as applicable.

f_s (LL+ IM): Un-factored stress at edge of flange for controlling steel flange due to vertical composite live load plus impact loads as calculated below (ksi).
M_{LL+IM} / S_c (n) or M_{LL+IM} / S_c (cr) as applicable.

$f_s + f_f / 2$ (Service II): Sum of stresses as computed below (ksi).
f_s DC1 + f_s DC2 + f_s DW + 1.3 f_s (LL+ IM) + f_f /2

Service II Resistance: Composite ($0.95R_hF_{yf}$) or noncomposite ($0.80R_hF_{yf}$) stress capacity according to Article 6.10.4.2 (ksi).

$f_s + f_f / 3$ (Strength I): Sum of stresses as computed below on non-compact sections (ksi).
1.25 (f_s DC1 + f_s DC2) + 1.5 f_s DW + 1.75 f_s (LL+ IM) + f_f /3

$\Phi_f F_n$: Factored nominal flexural resistance of the section as specified in Article 6.10.7.2 or 6.10.8 as applicable (ksi).

V_f: Maximum factored shear range in span computed according to Article 6.10.10.

OCF: Obtuse Correction Factor according to Article 4.6.2.2.3c or as further simplified by IDOT provisions.

R_{DC1}: Un-factored reaction due to non-composite dead load (kip).

R_{DC2}: Un-factored reaction due to long-term composite (superimposed excluding future wearing surface) dead load (kip).

R_{DW} : Un-factored reaction due to long-term composite (superimposed future wearing surface only) dead load (kip).

R_{LL} : Un-factored live load reaction (kip).

R_{IM} : Un-factored dynamic load allowance (impact) (kip).

R_{Total} (Strength I)(Impact): Strength I load combination of factored design reactions (kip).
$1.25\ (R_{DC1} + R_{DC2}) + 1.5R_{DW} + 1.75\ (R_{LL} + R_{IM})$

R_{Total} (Strength I)(No Impact): Strength I load combination of factored design reactions, not including dynamic load allowance (Impact) (kip).
$1.25\ (R_{DC1} + R_{DC2}) + 1.5R_{DW} + 1.75\ (R_{LL})$

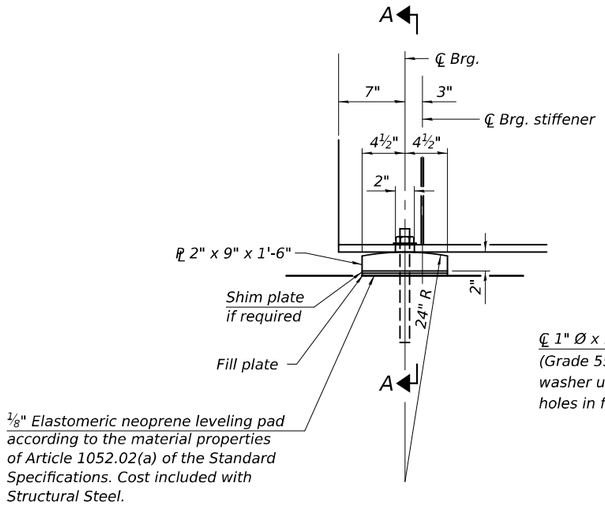

ELEVATION AT ABUTMENT

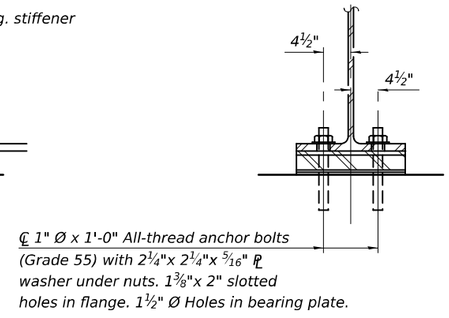

SECTION A-A

FIXED BEARING AT ABUTMENT

(12 Required)

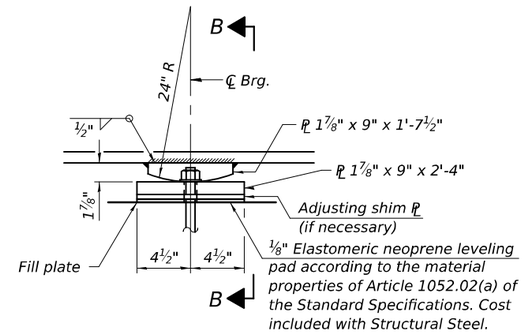

ELEVATION AT PIER

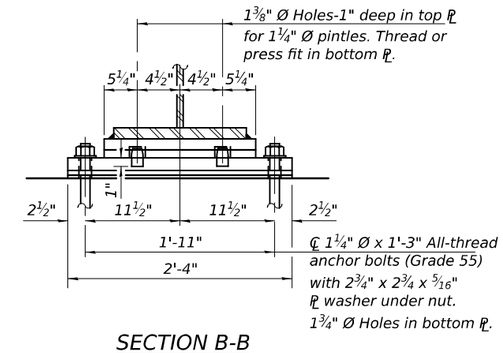

SECTION B-B

FIXED BEARING AT PIER

(6 Required)

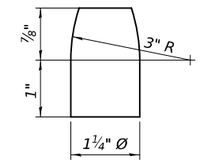

PINTLE

Notes:

Anchor bolts at all supports shall be installed as each member is erected unless an equivalent temporary means of lateral restraint is used.

Two ⅛ in. adjusting shims shall be provided for each bearing in addition to all other plates or shims and placed as shown on bearing details.

All bearing plates, shim plates, fill plates, anchor bolts, nuts, washers and pintles shall be galvanized according to AASHTO M111 or M232 as applicable.

The structural steel plates and pintles of the Bearing Assembly shall conform to the requirements of AASHTO M270 Grade 50.

FILL PLATE

Location	Girder	Plate Size (in.)
West Abut	4	⅛"
Pier	3	¼"
	4	⅝"
East Abut	4	¾"
	5	½"

BILL OF MATERIAL

Item	Unit	Total
Anchor Bolts, 1"	Each	24
Anchor Bolts, 1¼"	Each	12

MODEL: 0740088-70629-021
FILE NAME: pw://ildot-pw.bentley.com:PWIDOT:Documents/IDOT Offices/Bureau of Bridges and Structures/OBM Projects/0740088/CADData/Bridge/0740088-70629-Design.dgn
10/10/2024 2:21:50 PM

DESIGNED - DAVID H. RICHTER	EXAMINED	ENGINEER OF BRIDGE DESIGN	DATE - 10-10-2024
CHECKED - RYAN P. NEGANGARD			
DRAWN - GLENN W. STOVER	PASSED	ENGINEER OF BRIDGES AND STRUCTURES	REVISED - ____
CHECKED - D.H.R. / R.P.N.			REVISED - ____

STATE OF ILLINOIS
DEPARTMENT OF TRANSPORTATION

BEARING DETAILS
STRUCTURE NO. 074-0088

SHEET 21 OF 30 SHEETS

F.A.S. RTE.	SECTION	COUNTY	TOTAL SHEETS	SHEET NO.
1532	74-69BR	PIATT	78	59
		CONTRACT NO. 70629		
		ILLINOIS	FED. AID PROJECT	

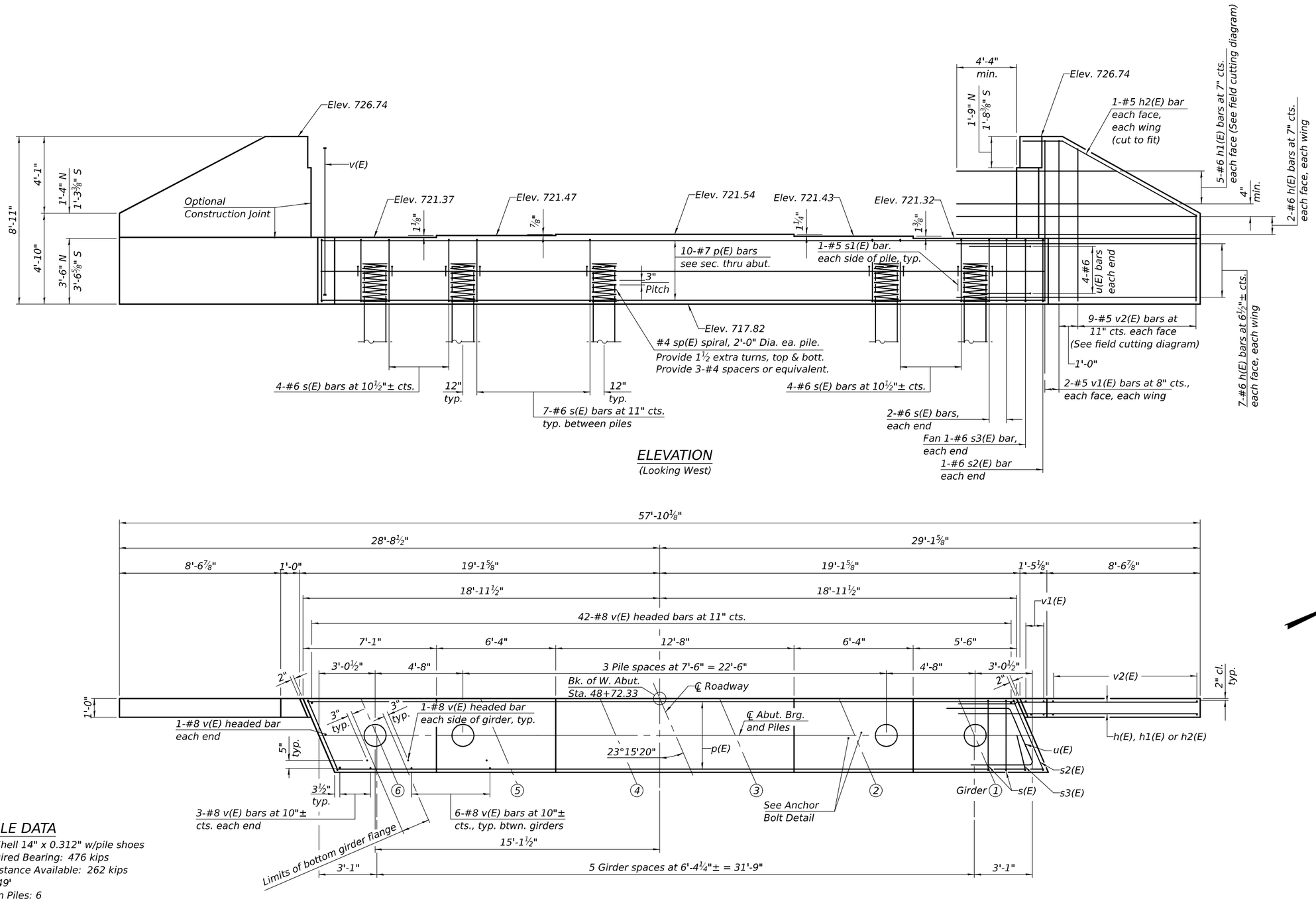

PILE DATA

Type: Metal Shell 14" x 0.312" w/pile shoes
Nominal Required Bearing: 476 kips
Factored Resistance Available: 262 kips
Est. Length: 49'
No. Production Piles: 6
No. Test Piles: 0

DESIGNED - DAVID H. RICHTER	EXAMINED	ENGINEER OF BRIDGE DESIGN	DATE - 10-10-2024	
CHECKED - RYAN P. NEGANGARD	PASSED	ENGINEER OF BRIDGES AND STRUCTURES	REVISED -	
DRAWN - GLENN W. STOVER			REVISED -	
CHECKED - D.H.R. / R.P.N.				

STATE OF ILLINOIS
DEPARTMENT OF TRANSPORTATION

WEST ABUTMENT
STRUCTURE NO. 074-0088

SHEET 22 OF 30 SHEETS

F.A.S. RTE.	SECTION	COUNTY	TOTAL SHEETS	SHEET NO.
1532	74-69BR	PIATT	78	60

CONTRACT NO. 70629

ILLINOIS | FED. AID PROJECT

MODEL: 0740088-70629-022
FILE NAME: pw://ildot-pw.bentley.com:PWIDOT/Documents/IDOT O ces/Bureau of Bridges and Structures/OBM Projects/0740088/CADData/Bridge/0740088-70629-Design.dgn
10/10/2024 2:21:50 PM

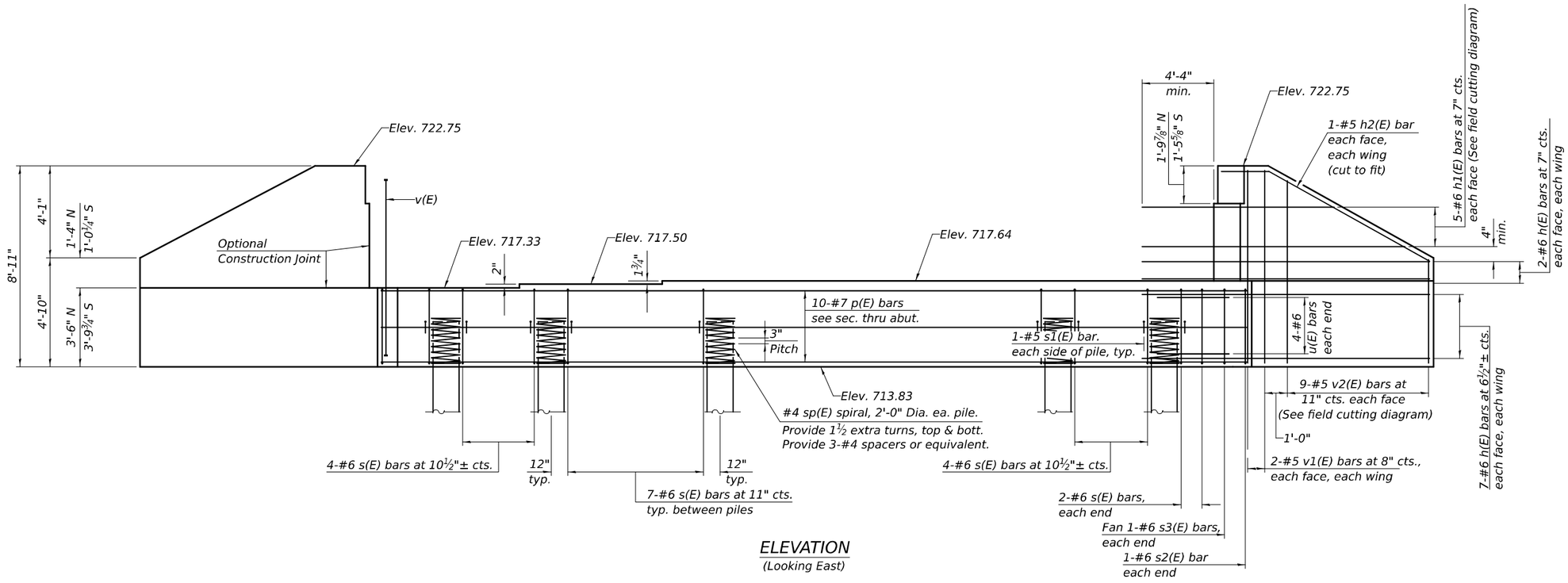

ELEVATION
(Looking East)

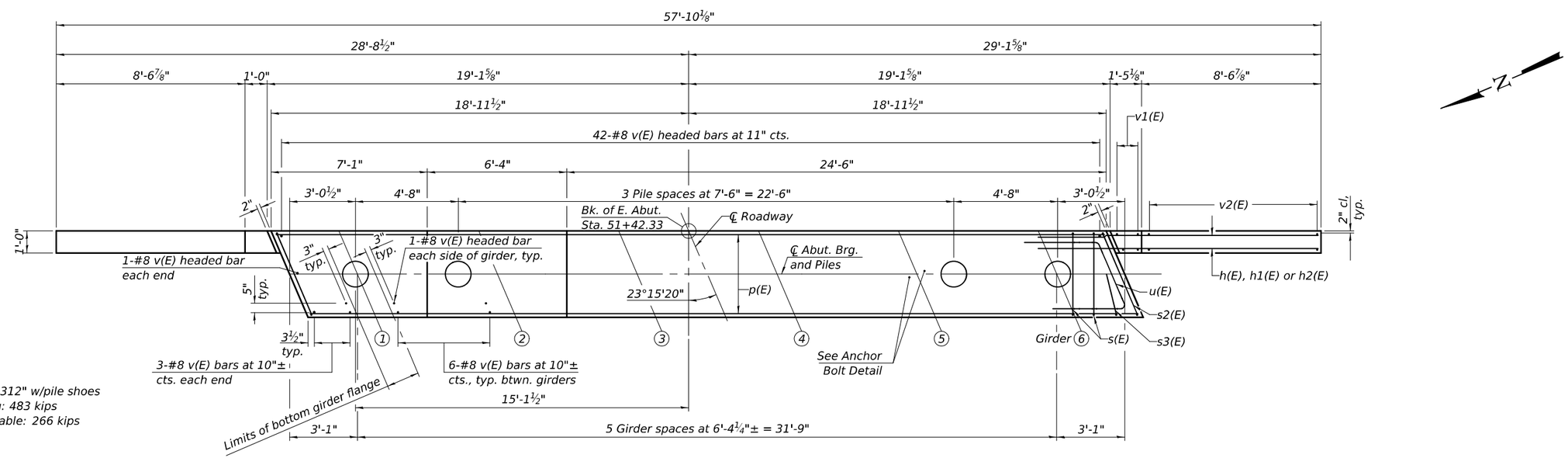

PLAN

PILE DATA

Type: Metal Shell 14" x 0.312" w/pile shoes
Nominal Required Bearing: 483 kips
Factored Resistance Available: 266 kips
Est. Length: 66'
No. Production Piles: 5
No. Test Piles: 1

DESIGNED - DAVID H. RICHTER	EXAMINED	DATE - 10-10-2024	
CHECKED - RYAN P. NEGANGARD	ENGINEER OF BRIDGE DESIGN		
DRAWN - GLENN W. STOVER	PASSED	REVISED -	
CHECKED - D.H.R. / R.P.N.	ENGINEER OF BRIDGES AND STRUCTURES	REVISED -	

STATE OF ILLINOIS
DEPARTMENT OF TRANSPORTATION

EAST ABUTMENT
STRUCTURE NO. 074-0088

SHEET 23 OF 30 SHEETS

F.A.S. RTE.	SECTION	COUNTY	TOTAL SHEETS	SHEET NO.
1532	74-69BR	PIATT	78	61

CONTRACT NO. 70629

ILLINOIS | FED. AID PROJECT

MODEL: 0740088-70629-023
FILE NAME: pw://ildot-pw.bentley.com:PWIDOT/Documents/IDOT Offices/Bureau of Bridges and Structures/OBM Projects/0740088/CADData/Bridge/0740088-70629-Design.dgn
10/10/2024 2:21:51 PM

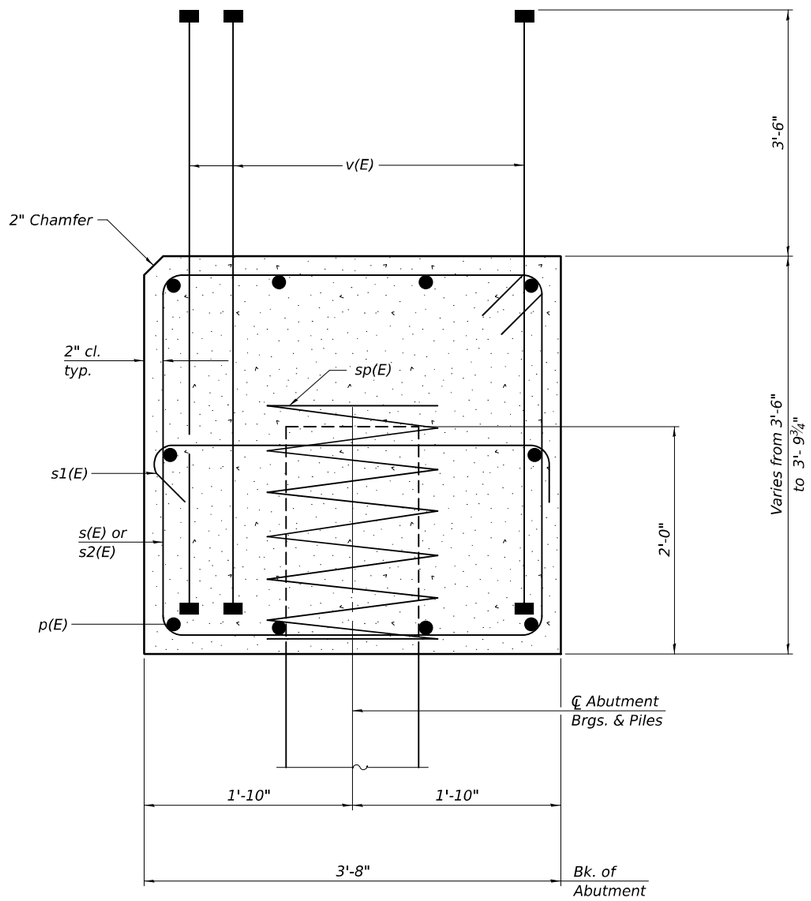

SEC. THRU ABUT.

Dimensions at Rt ∠'s to abutment

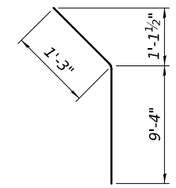

BAR h2(E)

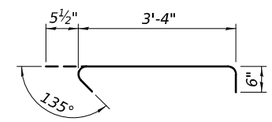

BAR s1(E)

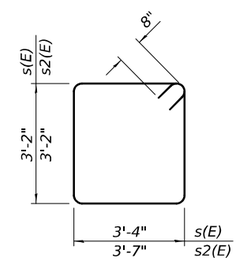

BAR s(E) & s2(E)

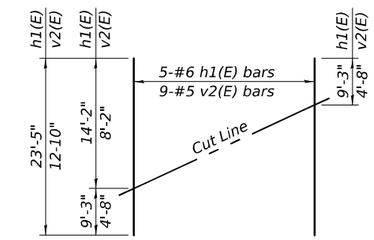

FIELD CUTTING DIAGRAM

Order h1(E) and v2(E) full length. Cut as shown and use remainder of bars in opposite wing.

WEST ABUTMENT BILL OF MATERIAL

Bar	No.	Size	Length	Shape
h(E)	36	#6	14'-4"	
h1(E)	10	#6	23'-5"	
h2(E)	4	#5	10'-7"	
p(E)	10	#7	37'-7"	
s(E)	33	#6	14'-4"	
s1(E)	12	#5	4'-4"	
s2(E)	2	#6	14'-10"	
s3(E)	2	#6	6'-10"	
* sp(E)	6	#4	2'-0"	
u(E)	8	#6	12'-2"	
v(E)	92	#8	6'-8"	
v1(E)	8	#5	8'-7"	
v2(E)	18	#5	12'-10"	
Structure Excavation		Cu. Yd.	132	
Concrete Structures		Cu. Yd.	23.8	
Reinforcement Bars, Epoxy Coated		Pound	5140	
Furnishing Metal Shell Piles 14" x 0.312"		Foot	294	
Driving Piles		Foot	294	
Pile Shoes		Each	6	

* Length is height of spiral.

EAST ABUTMENT BILL OF MATERIAL

Bar	No.	Size	Length	Shape
h(E)	36	#6	14'-4"	
h1(E)	10	#6	23'-5"	
h2(E)	4	#5	10'-7"	
p(E)	10	#7	37'-7"	
s(E)	33	#6	14'-4"	
s1(E)	12	#5	4'-4"	
s2(E)	2	#6	14'-10"	
s3(E)	2	#6	6'-10"	
* sp(E)	6	#4	2'-0"	
u(E)	8	#6	12'-2"	
v(E)	92	#8	6'-8"	
v1(E)	8	#5	8'-7"	
v2(E)	18	#5	12'-10"	
Structure Excavation		Cu. Yd.	134	
Concrete Structures		Cu. Yd.	24.4	
Reinforcement Bars, Epoxy Coated		Pound	5140	
Furnishing Metal Shell Piles 14" x 0.312"		Foot	330	
Driving Piles		Foot	330	
Test Pile Metal Shells		Each	1	
Pile Shoes		Each	6	

* Length is height of spiral.

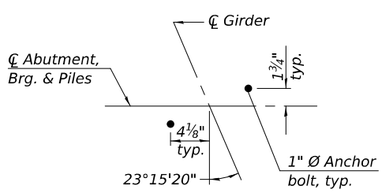

ANCHOR BOLT DETAIL

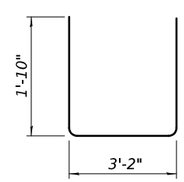

BAR s3(E)

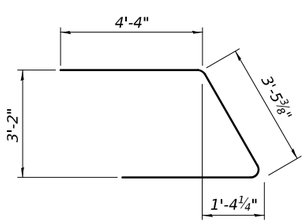

BAR u(E)

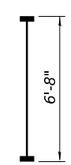

BAR v(E)

(Headed. 368-#8 Bar Terminators)

Notes:
Pour steps monolithically with cap.
Bar terminators, paid for seperately. See Total Bill of Material.
For details of piles see sheet 27 of 30.

MODEL: 0740088-70629-024
FILE NAME: pw://ildot-pw.bentley.com:PWIDOT/Documents/IDOT O ces/Bureau of Bridges and Structures/OBM Projects/0740088/CADData/Bridge/0740088-70629-Design.dgn
10/10/2024 2:21:51 PM

DESIGNED - DAVID H. RICHTER	EXAMINED	DATE - 10-10-2024	
CHECKED - RYAN P. NEGANGARD	ENGINEER OF BRIDGE DESIGN		
DRAWN - GLENN W. STOVER	PASSED	REVISED -	
CHECKED - D.H.R. / R.P.N.	ENGINEER OF BRIDGES AND STRUCTURES	REVISED -	

STATE OF ILLINOIS
DEPARTMENT OF TRANSPORTATION

ABUTMENT DETAILS
STRUCTURE NO. 074-0088

SHEET 24 OF 30 SHEETS

F.A.S. RTE.	SECTION	COUNTY	TOTAL SHEETS	SHEET NO.
1532	74-69BR	PIATT	78	62

CONTRACT NO. 70629

ILLINOIS | FED. AID PROJECT

PILE DATA

Type: Metal shell 14" x 0.312" w/pile shoes
Nominal Required Bearing: 505 kips
Factored Resistance Available: 278 kips
Est. Length: 38'
No. Production Piles: 13
No. Test Piles: 1

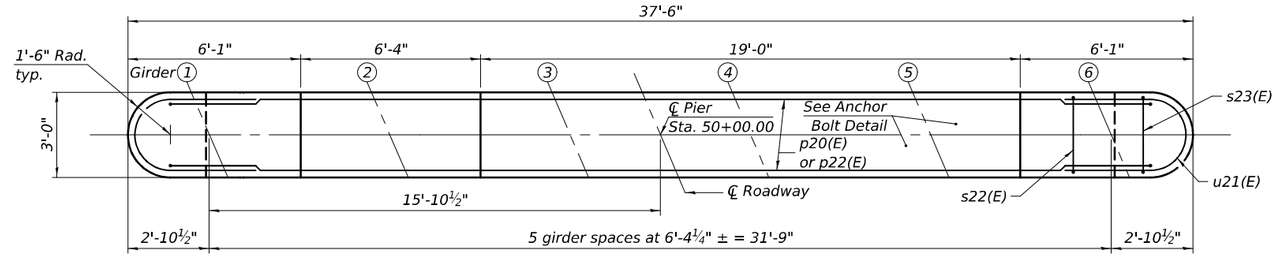

TOP PLAN

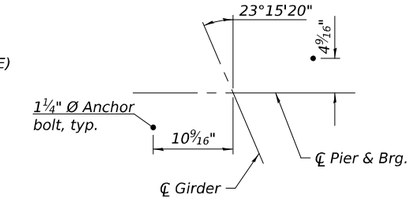

ANCHOR BOLT DETAIL

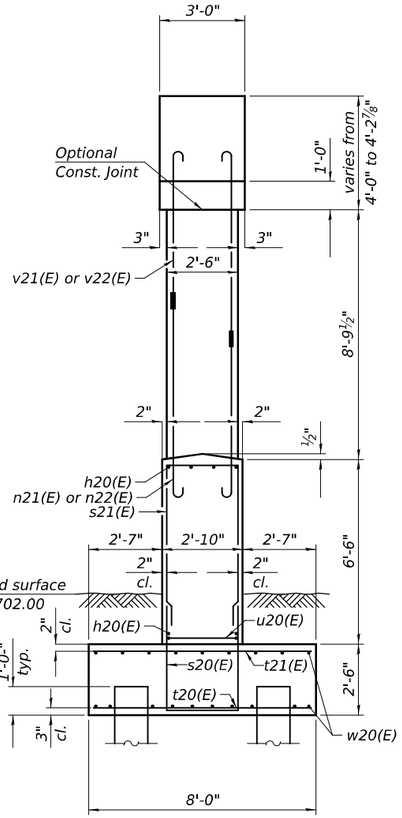

END VIEW

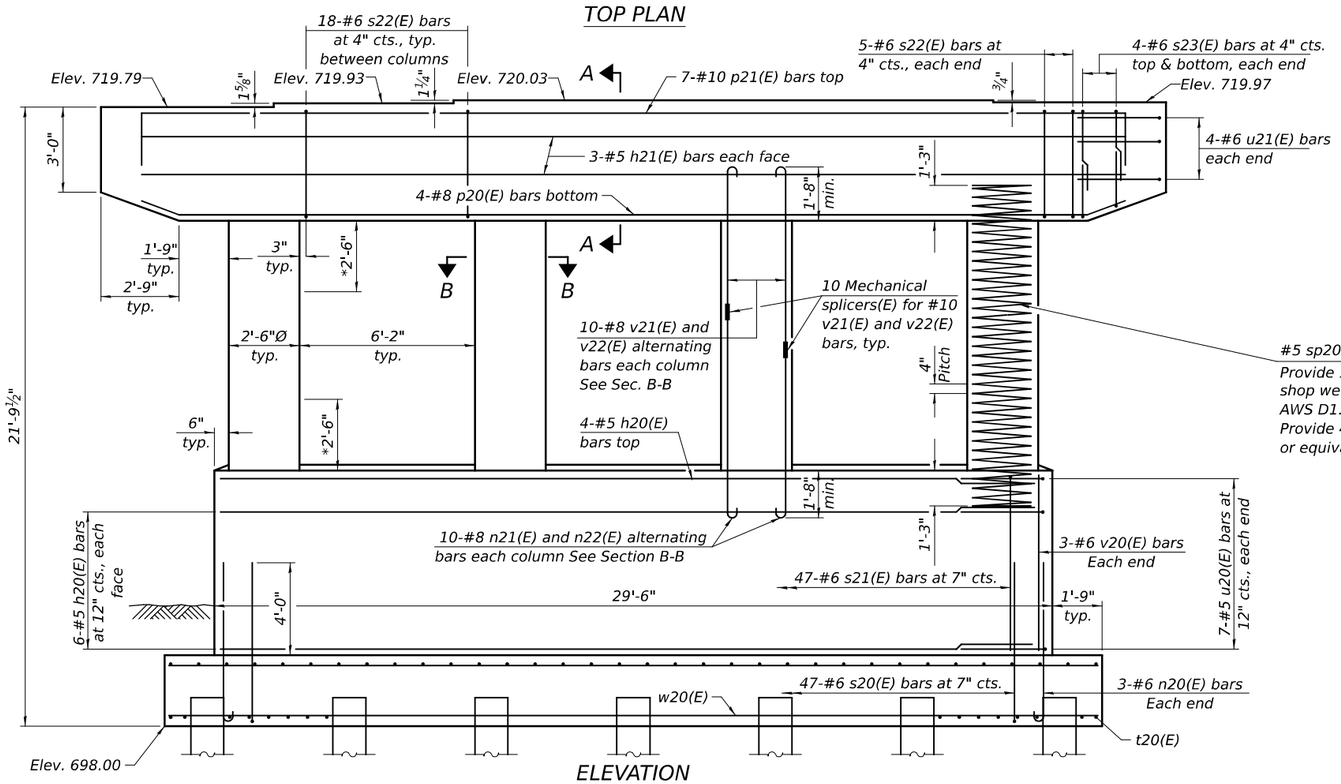

ELEVATION
(Looking East)

*Splicing of reinforcement will not be allowed in this region

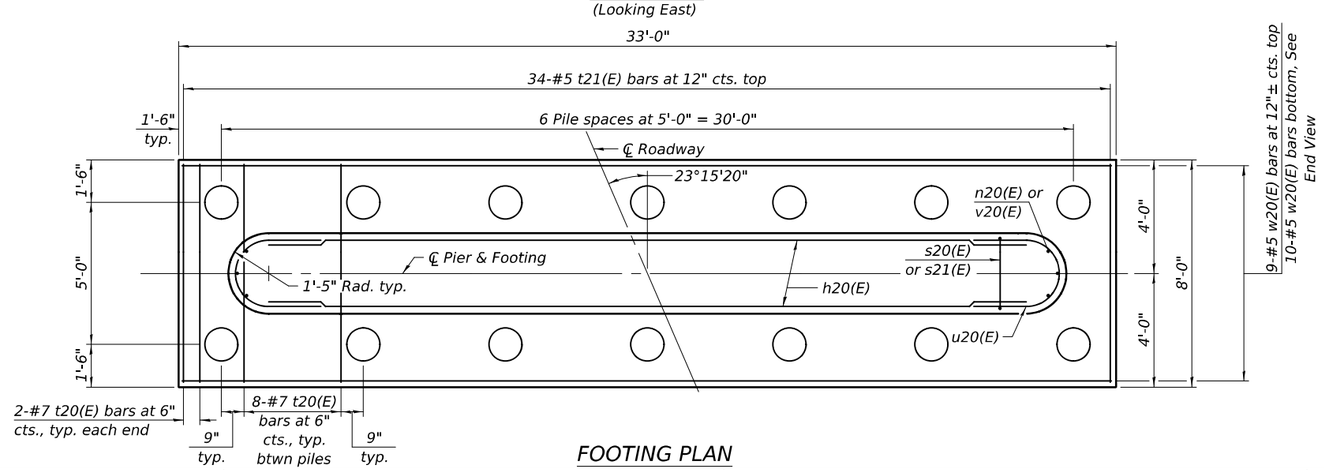

FOOTING PLAN

Notes:
Space reinforcement in cap to miss anchor bolts.
Pour steps monolithically with cap.
For details of piles, see sheet 27 of 30.
When splicing of spiral reinforcement is necessary, the spirals shall be provided with 1½" extra turns at the ends to be spliced. These additional turns shall either be welded together according to AWS D1.4, or shall both terminate with a 135° standard hook.

DESIGNED - DAVID H. RICHTER	EXAMINED	DATE - 10-10-2024	STATE OF ILLINOIS DEPARTMENT OF TRANSPORTATION
CHECKED - RYAN P. NEGANGARD	ENGINEER OF BRIDGE DESIGN		
DRAWN - GLENN W. STOVER	PASSED	REVISED -	
CHECKED - D.H.R. / R.P.N.	ENGINEER OF BRIDGES AND STRUCTURES	REVISED -	

PIER
STRUCTURE NO. 074-0088
SHEET 25 OF 30 SHEETS

F.A.S. RTE.	SECTION	COUNTY	TOTAL SHEETS	SHEET NO.
1532	74-69BR	PIATT	78	63

CONTRACT NO. 70629
ILLINOIS FED. AID PROJECT

MODEL: 0740088-70629-025
FILE NAME: pw://ildot-pw.bentley.com:PWIDOT/Documents/IDOT Offices/Bureau of Bridges and Structures/OBM Projects/0740088/CADData/Bridge/0740088-70629-Design.dgn
10/10/2024 2:21:51 PM

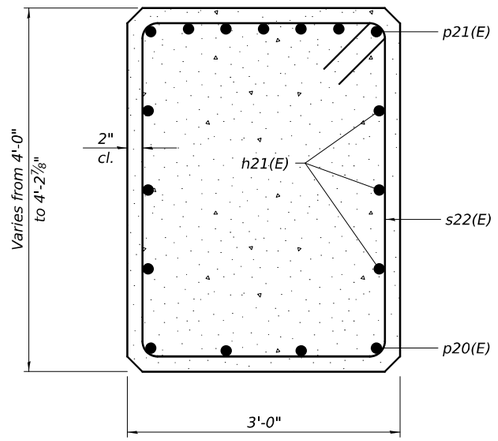

SEC. A-A

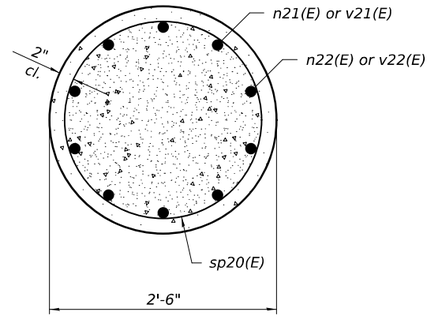

SEC. B-B

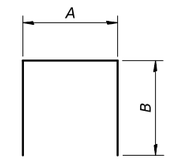

BARS s20(E),
s21(E) and s23(E)

A & B DIMENSIONS

Bar	A	B
s20(E)	2'-6"	6'-3"
s21(E)	2'-6"	6'-2"
s23(E)	2'-8"	3'-2"

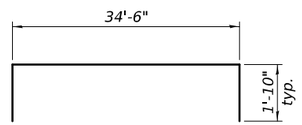

BAR p21(E)

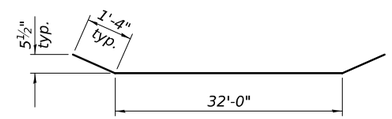

BAR p20(E)

PIER BILL OF MATERIAL

Bar	No.	Size	Length	Shape
h20(E)	16	#5	26'-8"	
h21(E)	6	#5	34'-6"	
n20(E)	6	#6	6'-11"	
n21(E)	20	#8	6'-0"	
n21(E)	20	#8	8'-0"	
p20(E)	4	#8	34'-8"	
p21(E)	7	#10	38'-2"	
s20(E)	47	#6	15'-0"	
s21(E)	47	#6	14'-10"	
s22(E)	64	#6	14'-0"	
s23(E)	16	#6	9'-0"	
* sp20(E)	4	#5	11'-4"	
t20(E)	52	#7	7'-8"	
t21(E)	34	#5	7'-8"	
u20(E)	14	#5	10'-10"	
u21(E)	8	#6	12'-8"	
v20(E)	6	#6	6'-2"	
v21(E)	20	#8	8'-0"	
v22(E)	20	#8	6'-0"	
w20(E)	19	#5	32'-8"	
Structure Excavation		Cu. Yd.	66	
Concrete Structures		Cu. Yd.	68.4	
Reinforcement Bars, Epoxy Coated		Pound	10540	
Furnishing Metal Shell Piles 14" x 0.312"		Foot	494	
Driving Piles		Foot	494	
Test Pile Metal Shells		Each	1	
Pile Shoes		Each	14	

* Length is height of spiral.

BARS n20(E), n21(E), n22(E)
v21(E), and v22(E)

C, D & E DIMENSIONS

Bar	C	D	E
n20(E)	6"	8"	6'-3"
n21(E)	8"	11"	5'-1"
n22(E)	8"	11"	7'-1"
v21(E)	8"	11"	7'-1"
v22(E)	8"	11"	5'-1"

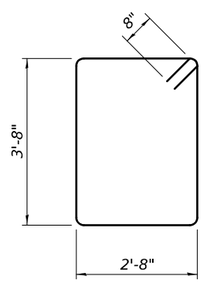

BAR s22(E)

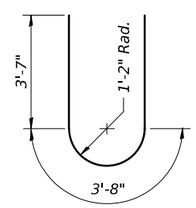

BAR u20(E)

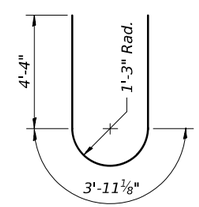

BAR u21(E)

MODEL: 0740088-70629-026
FILE NAME: pw://ildot-pw.bentley.com:PWIDOT/Documents/IDOT Offices/Bureau of Bridges and Structures/OBM Projects/0740088/CADData/Bridge/0740088-70629-Design.dgn
10/10/2024 2:21:52 PM

DESIGNED - DAVID H. RICHTER	EXAMINED	DATE - 10-10-2024	
CHECKED - RYAN P. NEGANGARD	ENGINEER OF BRIDGE DESIGN		
DRAWN - GLENN W. STOVER	PASSED	REVISED -	
CHECKED - D.H.R. / R.P.N.	ENGINEER OF BRIDGES AND STRUCTURES	REVISED -	

STATE OF ILLINOIS
DEPARTMENT OF TRANSPORTATION

PIER DETAILS
STRUCTURE NO. 074-0088

SHEET 26 OF 30 SHEETS

F.A.S. RTE.	SECTION	COUNTY	TOTAL SHEETS	SHEET NO.
1532	74-69BR	PIATT	78	64
		CONTRACT NO. 70629		
		ILLINOIS	FED. AID PROJECT	

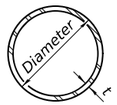

METAL SHELL PILE TABLE

Designation and outside diameter	Wall thickness t	Weight per foot (Lbs./ft.)	Inside volume (yd.³/ft.)
PP12	0.250"	31.40	0.0267
PP14	0.250"	36.75	0.0368
PP14	0.312"	45.65	0.0361
PP16	0.312"	52.32	0.0478
PP16	0.375"	62.64	0.0470

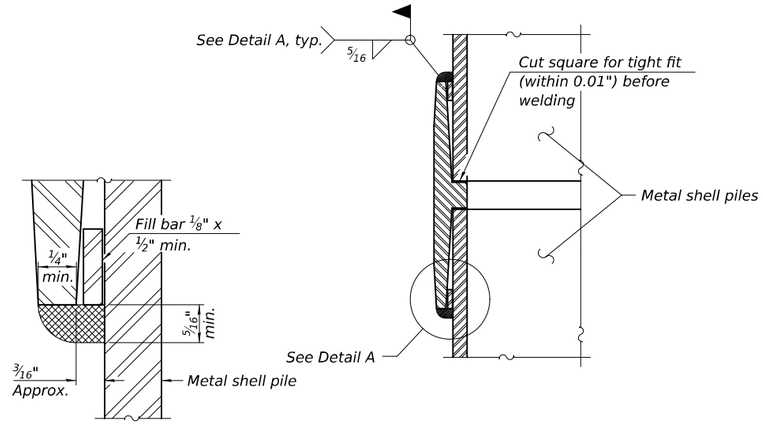

DETAIL A

WELDED COMMERCIAL SPLICE

Notes:
The 1/8" x 1/2" min. fill bar may be constructed of 2 bars with a 1/8" max. gap between them.
Pile segments shall be driven to solid contact with splicer before welding.

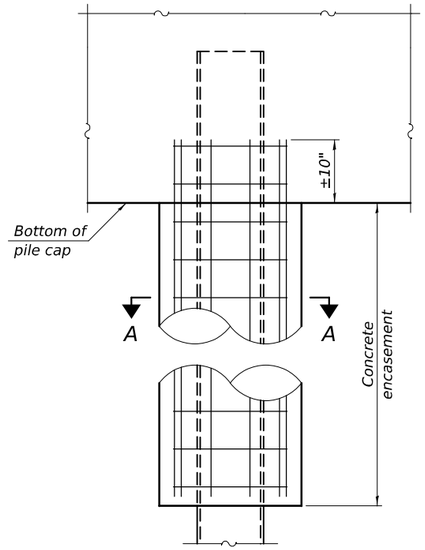

ELEVATION

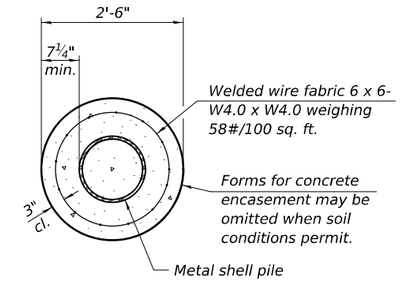

SECTION A-A

INDIVIDUAL PILE CONCRETE ENCASEMENT

(When specified)

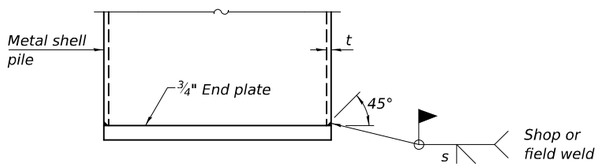

END PLATE ATTACHMENT

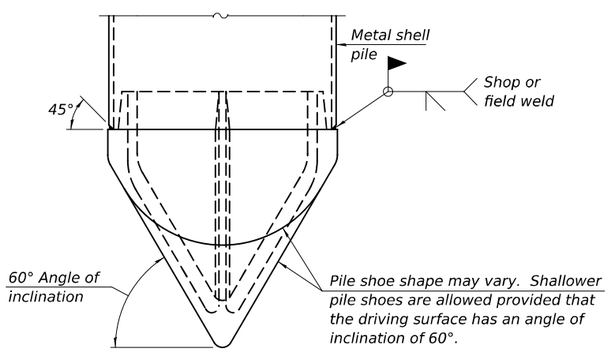

PILE SHOE ATTACHMENT

(When called for on the plans, the Contractor shall furnish metal shell pile shoes consisting of a single piece conical pile point as shown. The pile shoes shall be cast in one piece steel according to either ASTM A 148 Grade 80-50 or AASHTO M 103 Grade 65-35 and shall provide full bearing over the full circumference of the metal shell pile. The pile shoe shall have tapered leads to assure proper alignment and fitting and shall be secured to the pile with a circumferential weld).

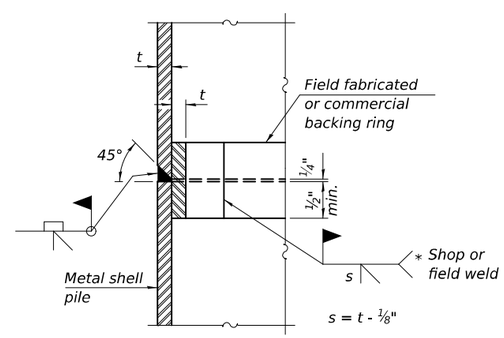

COMPLETE PENETRATION WELD SPLICE

* Field fabricated backing ring may be made from pile shell by removing segment to allow reducing circumference and vertically rejoin with partial joint penetration weld.

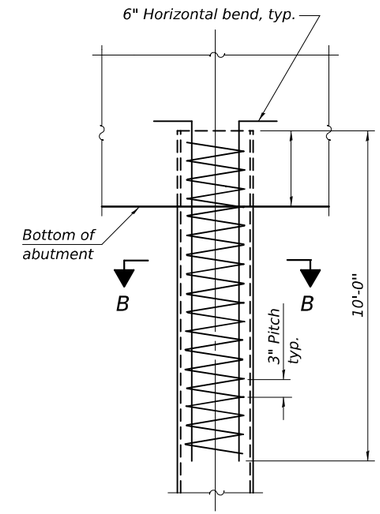

ELEVATION

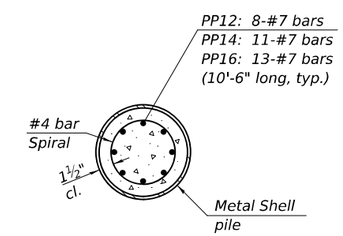

SECTION B-B

REINFORCEMENT AT ABUTMENTS

(Omit when concrete encasement is specified)

Note:
The metal shell piles shall be according to Article 1006.05 of the Standard Specifications.

F-MS 5-15-2023

DESIGNED - DAVID H. RICHTER	EXAMINED	ENGINEER OF BRIDGE DESIGN	DATE - 10-10-2024
CHECKED - RYAN P. NEGANGARD			
DRAWN - GLENN W. STOVER	PASSED	ENGINEER OF BRIDGES AND STRUCTURES	REVISED -
CHECKED - D.H.R. / R.P.N.			REVISED -

STATE OF ILLINOIS
DEPARTMENT OF TRANSPORTATION

METAL SHELL PILE DETAILS
STRUCTURE NO. 074-0088

SHEET 27 OF 30 SHEETS

F.A.S. RTE.	SECTION	COUNTY	TOTAL SHEETS	SHEET NO.
1532	74-69BR	PIATT	78	65

CONTRACT NO. 70629

ILLINOIS FED. AID PROJECT

MODEL: 0740088-70629-027
FILE NAME: pw://ildot-pw.bentley.com:PWIDOT/Documents/IDOT Offices/Bureau of Bridges and Structures/OBM Projects/0740088/CADData/Bridge/0740088-70629-Design.dgn
10/10/2024 2:21:52 PM

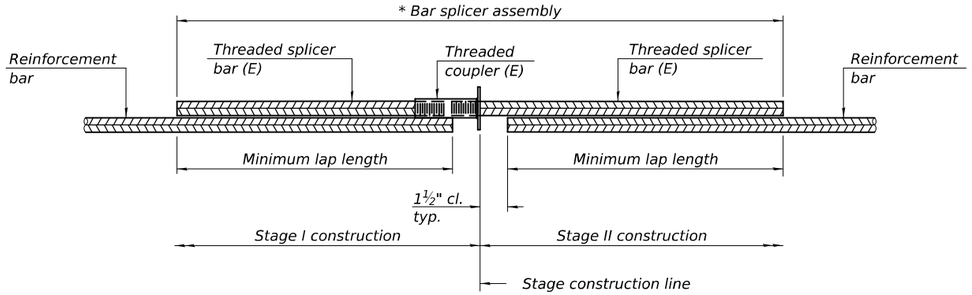

STANDARD BAR SPLICER ASSEMBLY PLAN

Only bar splicer assemblies as presented on the approved QPL list may be used.

Threaded splicer bar length = min. lap length + 1½" + thread length

* Epoxy not required on Bar Splicer Assembly components used in conjunction with black bars.

Location	Bar size	No. assemblies required	Minimum lap length

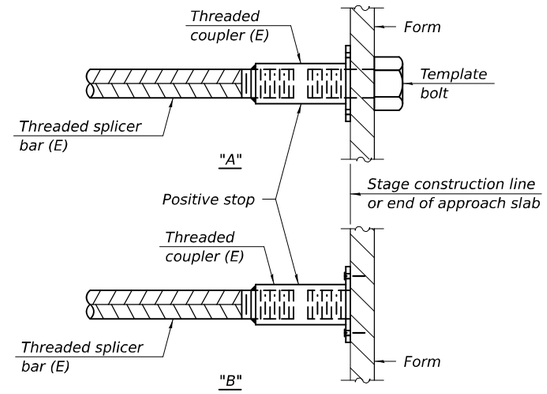

INSTALLATION AND SETTING METHODS

"A" : Set bar splicer assembly by means of a template bolt.
"B" : Set bar splicer assembly by nailing to wood forms or cementing to steel forms.
(E) : Indicates epoxy coating.

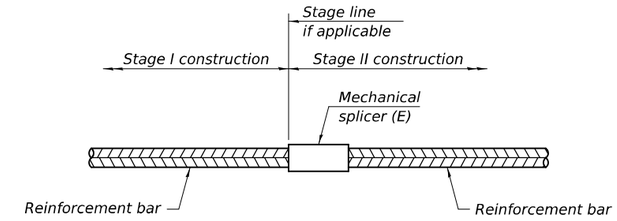

STANDARD MECHANICAL SPLICER

Location	Bar size	No. assemblies required
Pier	#8	40

Notes:
Splicer bars shall be deformed with threaded ends and have a minimum 60 ksi yield strength.
All reinforcement shall be lapped and tied to the splicer bars.
Bar splicer assemblies shall be epoxy coated according to the requirements for reinforcement bars. See Section 508 of the Standard Specifications.
See approved list of bar splicer assemblies and mechanical splicers for alternatives.

BSD-1 5-15-2023

DESIGNED - DAVID H. RICHTER	EXAMINED	DATE - 10-10-2024	STATE OF ILLINOIS DEPARTMENT OF TRANSPORTATION
CHECKED - RYAN P. NEGANGARD	ENGINEER OF BRIDGE DESIGN		
DRAWN - GLENN W. STOVER	PASSED	REVISED -	
CHECKED - D.H.R. / R.P.N.	ENGINEER OF BRIDGES AND STRUCTURES	REVISED -	

BAR SPLICER ASSEMBLY AND MECHANICAL SPLICER DETAILS
STRUCTURE NO. 074-0088

SHEET 28 OF 30 SHEETS

F.A.S. RTE.	SECTION	COUNTY	TOTAL SHEETS	SHEET NO.
1532	74-69BR	PIATT	78	66

CONTRACT NO. 70629

ILLINOIS FED. AID PROJECT

MODEL: 0740088-70629-028
FILE NAME: pw://ildot-pw.bentley.com:PWIDOT/Documents/IDOT Offices/Bureau of Bridges and Structures/OBM Projects/0740088/CADData/Bridge/0740088-70629-Design.dgn
10/10/2024 2:21:52 PM

Illinois Department of Transportation
Division of Highways
Region 3 / District 5 (Paris)

SOIL BORING LOG

Date 7/27/21

ROUTE FAI 72 DESCRIPTION OLD 47 OVER I-72 LOGGED BY DDB
DRILLED BY RBK

SECTION 74-69BR LOCATION NE 1/4, SEC. 28, TWP. 19N, RNG. 6E, 3rd PM
IL 1201 S.P.E. COORDS: N., E.

COUNTY PIATT DRILLING METHOD HSA HAMMER TYPE AUTO

STRUCT. NO. 074-0026
Station 1286+39.7

BORING NO. 1 NE HOLE
Station 51+99
Offset 6.00ft LT
Ground Surface Elev. 719.7 ft

Surface Water Elev. ft
Stream Bed Elev. ft

Groundwater Elev.:
First Encounter 669.7 ft ▼
Upon Completion ft
After Hrs. ft

Description	Elev.	DEPTH (ft)	SPT N (/6")	UCS Qu (tsf)	MOIST (%)
CONCRETE	718.70				
AGGREGATE BASE	718.20				
BLACK TOPSOIL			9		
		-5	3 3		NS
GRAY MOTTLED CLAY	713.70		1		
			2 4	1.5 P	27
			1		
		-10	3 4	2.18 B	19
			2		
			4 6	2.42 B	19
BLACK CLAY EMBANKMENT	705.70		2		
		-15	3 8	2.42 B	21
			3		
			5 7	3.15 B	19
			5		
		-20	5 6		NS
BLACK CLAY EMBANKMENT (continued)			4		
			5 7	2.67 B	22
			3		
		-25	4 5	2.42 B	25
GRAY SANDY CLAY TILL	693.70		5		
			4 4	2.0 P	17
			2		
		-30	2 3	0.73 B	15
STIFF BROWN CLAY TILL	689.70		2		
			1 4	1.70 B	14
BROWN SILTY CLAY LOAM	686.20		0		
		-35	4 4	1.5 P	19
STIFF GRAY CLAY TILL	683.70		4		
			6 9	2.91 B	11
			7		
		-40	8 11	4.61 B	8

The Unconfined Compressive Strength (UCS) Failure Mode is indicated by (B-Bulge, S-Shear, P-Penetrometer)
The SPT (N value) is the sum of the last two blow values in each sampling zone (AASHTO T206)

BBS 137

SOIL BORING 074-0026.GPJ R3D5 GINT DATA TEMPLATE.GDT 3/11/24

Illinois Department of Transportation
Division of Highways
Region 3 / District 5 (Paris)

SOIL BORING LOG

Date 7/27/21

ROUTE FAI 72 DESCRIPTION OLD 47 OVER I-72 LOGGED BY DDB
DRILLED BY RBK

SECTION 74-69BR LOCATION NE 1/4, SEC. 28, TWP. 19N, RNG. 6E, 3rd PM
IL 1201 S.P.E. COORDS: N., E.

COUNTY PIATT DRILLING METHOD HSA HAMMER TYPE AUTO

STRUCT. NO. 074-0026
Station 1286+39.7

BORING NO. 1 NE HOLE
Station 51+99
Offset 6.00ft LT
Ground Surface Elev. 719.7 ft

Surface Water Elev. ft
Stream Bed Elev. ft

Groundwater Elev.:
First Encounter 669.7 ft ▼
Upon Completion ft
After Hrs. ft

Description	Elev.	DEPTH (ft)	SPT N (/6")	UCS Qu (tsf)	MOIST (%)
STIFF GRAY CLAY TILL (continued)					
	675.70		12		
MOTTLED CLAY TILL		-45	12 14	1.21 B	16
GRAY SANDY CLAY TILL	671.70		10		
		▼-50	19 12	0.48 S	15
STIFF GRAY CLAY TILL	667.70		4		
		-55	7 11	4.36 B	2
			4		
	659.70	-60	6 11	2.42 B	13
GRAY FINE SAND			0		
		-65	0 0	0 P	20
STIFF GRAY CLAY TILL	652.70		7		
	649.70	-70	10 16	5.33 B	12
End of Boring		-75			
		-80			

The Unconfined Compressive Strength (UCS) Failure Mode is indicated by (B-Bulge, S-Shear, P-Penetrometer)
The SPT (N value) is the sum of the last two blow values in each sampling zone (AASHTO T206)

BBS 137

SOIL BORING 074-0026.GPJ R3D5 GINT DATA TEMPLATE.GDT 3/11/24

MODEL: 0740088-70629-029
FILE NAME: pw://ildot-pw.bentley.com:PWIDOT/Documents/IDOT O ces/Bureau of Bridges and Structures/OBM Projects/0740088/CADData/Bridge/0740088-70629-Design.dgn
10/10/2024 2:21:52 PM

DESIGNED -	DAVID H. RICHTER	EXAMINED	ENGINEER OF BRIDGE DESIGN
CHECKED -	RYAN P. NEGANGARD	PASSED	ENGINEER OF BRIDGES AND STRUCTURES
DRAWN -	GLENN W. STOVER	DATE -	10-10-2024
CHECKED -	D.H.R. / R.P.N.	REVISED -	
		REVISED -	

STATE OF ILLINOIS
DEPARTMENT OF TRANSPORTATION

SOIL BORING LOGS
STRUCTURE NO. 074-0088

SHEET 29 OF 30 SHEETS

F.A.S. RTE.	SECTION	COUNTY	TOTAL SHEETS	SHEET NO.
1532	74-69BR	PIATT	78	67

CONTRACT NO. 70629

ILLINOIS FED. AID PROJECT

Illinois Department of Transportation
Division of Highways
Region 3 / District 5 (Paris)

SOIL BORING LOG

Date 7/28/21

ROUTE FAI 72 DESCRIPTION OLD 47 OVER I-72 LOGGED BY DDB
DRILLED BY RBK

SECTION 74-69BR LOCATION NE 1/4, SEC. 28, TWP. 19N, RNG. 6E, 3rd PM
IL 1201 S.P.E. COORDS: N., E.

COUNTY PIATT DRILLING METHOD HSA HAMMER TYPE AUTO

STRUCT. NO. 074-0026
Station 1286+39.7

BORING NO. 2 SW HOLE
Station 48+13
Offset 7.00ft RT
Ground Surface Elev. 725.9 ft

Surface Water Elev. ft
Stream Bed Elev. ft

Groundwater Elev.:
First Encounter 670.9 ft ▼
Upon Completion ft
After Hrs. ft

Description	Elev.	DEPTH (ft)	SPT N (/6")	UCS Qu (tsf)	MOIST (%)
CONCRETE	724.90				
AGGREGATE BASE	724.40				
MOTTLED CLAY					
	721.90		2		
STIFF MOTTLED CLAY EMBANKMENT (MOSTLY GRAY)		-5	1 2	0.97 B	23
			4		
			4 6	3.64 S	17
			3		
			4 6	4.12 B	25
	715.90	-10			
MOTTLED EMBANKMENT (MOSTLY BROWN)					
			2		
			4 5	1.94 B	20
			4		
			4 6	1.94 S	20
		-15			
	709.90				
BROWN SANDY CLAY EMBANKMENT			4		
			4 8	1.94 B	14
	707.90				
BROWN STIFF CLAY EMBANKMENT			4		
		-20	4 8	3.64 B	24
	705.40				
GRAY CLAY EMBANKMENT			3		
			4 5	2.42 B	29
	702.90				
BROWN MOTTLED CLAY			3		
		-25	3 5	1.45 B	25
	699.90				
SOFT BROWN SANDY CLAY			1		
			1 1	0.48 B	20
	697.90				
BROWN MOTTLED CLAY			3		
		-30	4 7	1.45 B	14
			5		
			6 9	0 P	20
			4		
	691.40		5	1.94	11
GRAY CLAY TILL		-35	7	B	
			3		
			5 7	1.94 B	11
			0		
		-40	4 5	2.42 B	12

The Unconfined Compressive Strength (UCS) Failure Mode is indicated by (B-Bulge, S-Shear, P-Penetrometer)
The SPT (N value) is the sum of the last two blow values in each sampling zone (AASHTO T206)

BBS 137

SOIL BORING 074-0026.GPJ R3D5 GINT DATA TEMPLATE.GDT 3/11/24

Illinois Department of Transportation
Division of Highways
Region 3 / District 5 (Paris)

SOIL BORING LOG

Date 7/28/21

ROUTE FAI 72 DESCRIPTION OLD 47 OVER I-72 LOGGED BY DDB
DRILLED BY RBK

SECTION 74-69BR LOCATION NE 1/4, SEC. 28, TWP. 19N, RNG. 6E, 3rd PM
IL 1201 S.P.E. COORDS: N., E.

COUNTY PIATT DRILLING METHOD HSA HAMMER TYPE AUTO

STRUCT. NO. 074-0026
Station 1286+39.7

BORING NO. 2 SW HOLE
Station 48+13
Offset 7.00ft RT
Ground Surface Elev. 725.9 ft

Surface Water Elev. ft
Stream Bed Elev. ft

Groundwater Elev.:
First Encounter 670.9 ft ▼
Upon Completion ft
After Hrs. ft

Description	Elev.	DEPTH (ft)	SPT N (/6")	UCS Qu (tsf)	MOIST (%)
GRAY CLAY TILL (continued)					
			5		
		-45	6 9	2.42 B	10
			5		
			8 9	2.42 S	10
	675.90	-50			
COARSE SAND					
			1		
		▼55	1 6		12
			15		
			24 30		NS
	665.90	-60			
FINE SAND					
	664.40				
COARSE SAND					
	661.90		12		
GRAY CLAY TILL			11 26		13
	660.90	-65			
COARSE SAND					
	659.40				
GRAY CLAY TILL			12		
			8 15	4.85 B	13
	655.90	-70			
End of Boring					
		-75			
		-80			

The Unconfined Compressive Strength (UCS) Failure Mode is indicated by (B-Bulge, S-Shear, P-Penetrometer)
The SPT (N value) is the sum of the last two blow values in each sampling zone (AASHTO T206)

BBS 137

SOIL BORING 074-0026.GPJ R3D5 GINT DATA TEMPLATE.GDT 3/11/24

MODEL: 0740088-70629-030
FILE NAME: pw://ildot-pw.bentley.com:PWIDOT/Documents/IDOT O ces/Bureau of Bridges and Structures/OBM Projects/0740088/CADData/Bridge/0740088-70629-Design.dgn

DESIGNED - DAVID H. RICHTER	EXAMINED	DATE - 10-10-2024	STATE OF ILLINOIS DEPARTMENT OF TRANSPORTATION
CHECKED - RYAN P. NEGANGARD	ENGINEER OF BRIDGE DESIGN		
DRAWN - GLENN W. STOVER	PASSED	REVISED -	
CHECKED - D.H.R. / R.P.N.	ENGINEER OF BRIDGES AND STRUCTURES	REVISED -	

SOIL BORING LOGS
STRUCTURE NO. 074-0088

SHEET 30 OF 30 SHEETS

F.A.S. RTE.	SECTION	COUNTY	TOTAL SHEETS	SHEET NO.
1532	74-69BR	PIATT	78	68

CONTRACT NO. 70629

ILLINOIS FED. AID PROJECT

10/10/2024 2:21:53 PM

FINAL SURVEY		BY	DATE
NOTE BOOK	SURVEYED		
	PLOTTED		
	TEMPLATE		
	AREAS		
NO.	AREAS CHECKED		

ORIGINAL SURVEY		BY	DATE
NOTE BOOK	SURVEYED		
	PLOTTED		
	TEMPLATE		
	AREAS		
NO.	AREAS CHECKED		

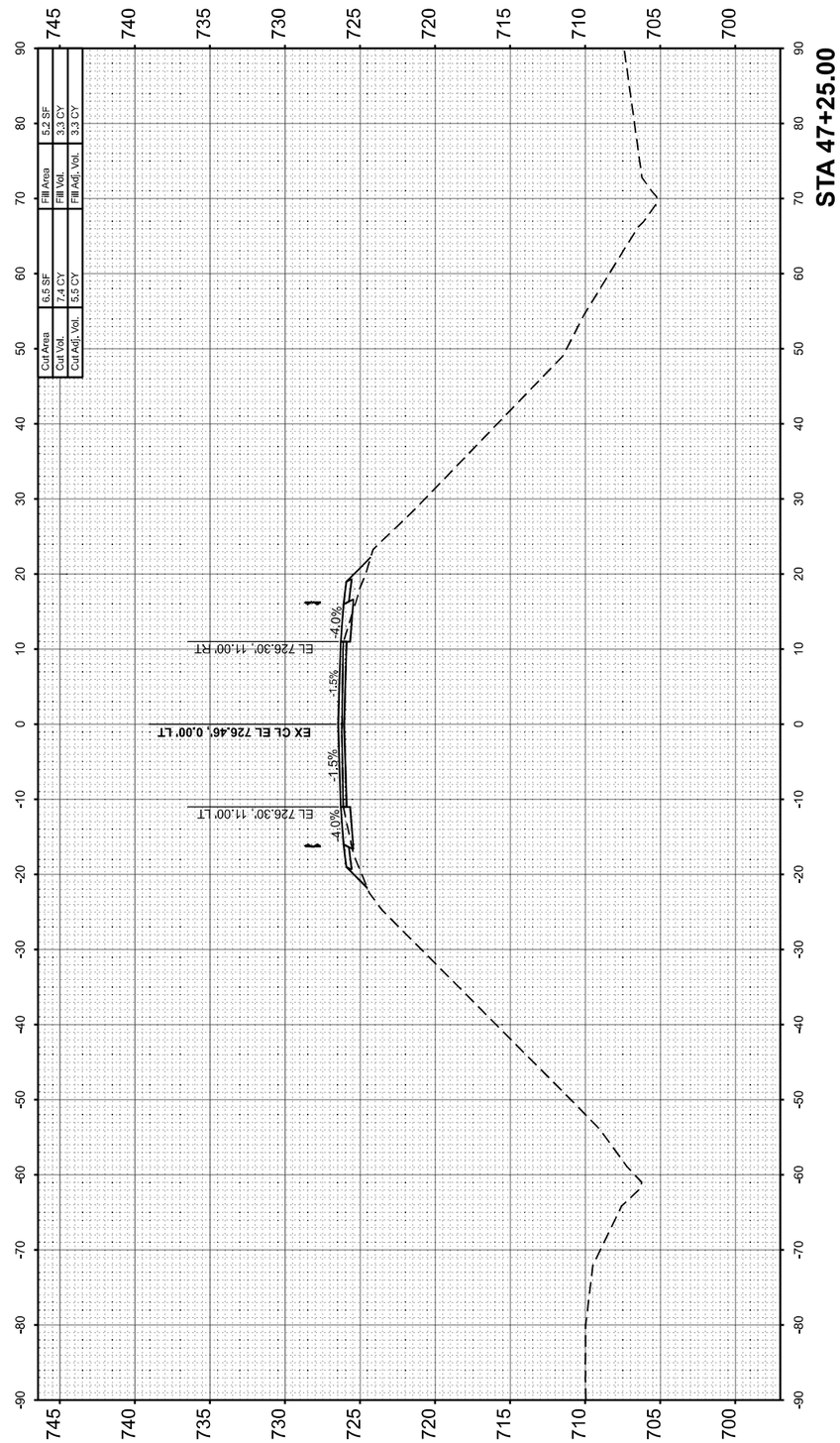

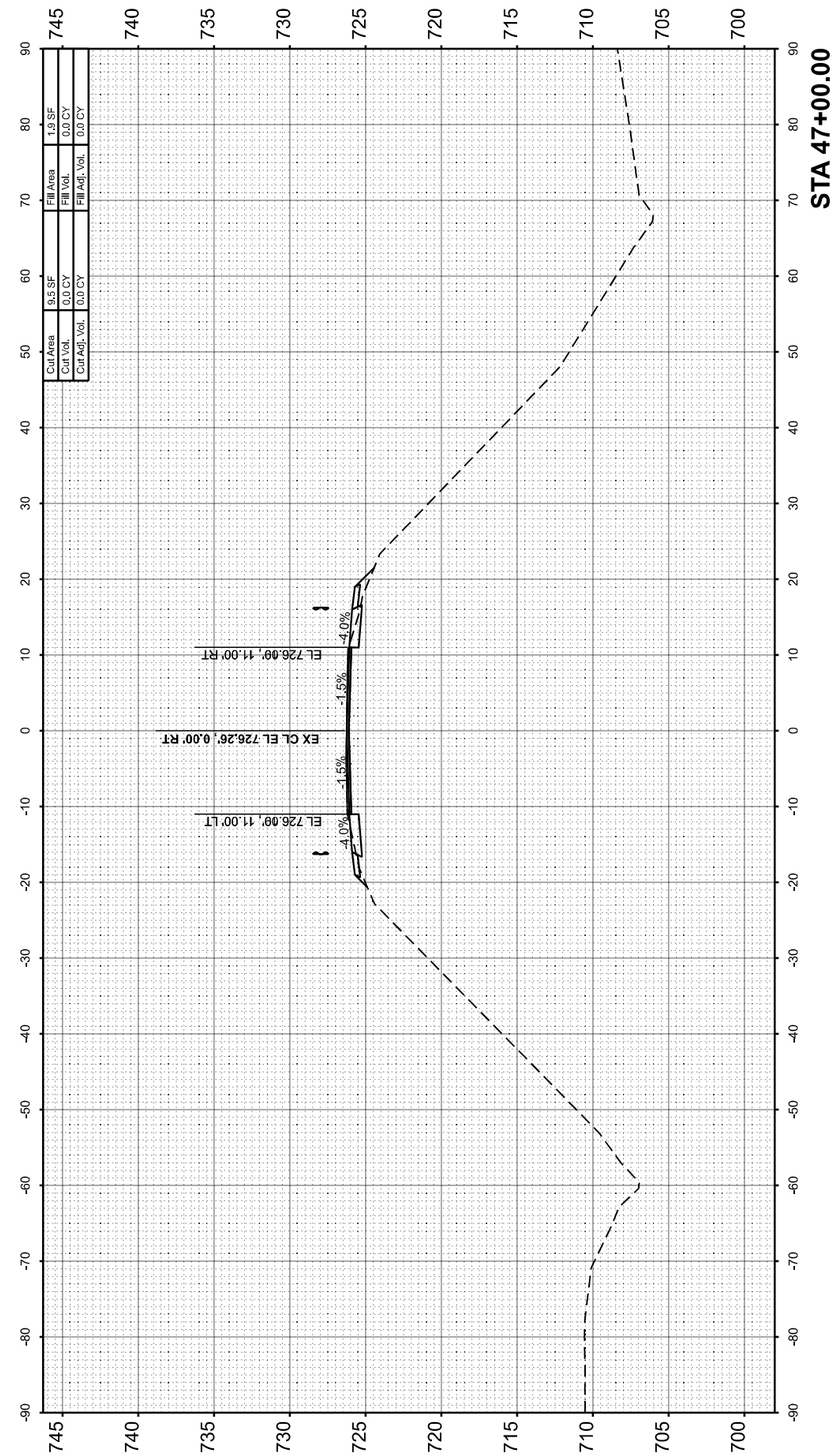

MODEL: OLD_47 - 47+00.01 [Sheet]
FILE NAME: P:\22E3703-3 - 70629 White Heath\70629 Section 74-69 BR\CADD Sheets\D570629-sht-xsc.dgn

BENTON & ASSOCIATES, INC.
CONSULTING ENGINEERS / LAND SURVEYORS
1970 WEST LAFAYETTE AVE.
JACKSONVILLE, IL 62650
PHONE: 217-243-4146 FAX: 217-243-4149
IL DESIGN FIRM REGISTRATION NO. 184-000852

USER NAME = druholl	DESIGNED - DSR	REVISED -	
	DRAWN - RDS	REVISED -	
PLOT SCALE = $SCALE$	CHECKED - WJS	REVISED -	
PLOT DATE = 8/2/2024	DATE - AUGUST 2, 2024	REVISED -	

STATE OF ILLINOIS
DEPARTMENT OF TRANSPORTATION

CROSS SECTIONS
WHITE HEATH ROAD (OLD 47)

SCALE: 1"=10' | SHEET OF 10 SHEETS | STA. 47+00.00 TO STA. 47+25.00

F.A.I RTE.	SECTION	COUNTY	TOTAL SHEETS	SHEET NO.
72	74-69BR	PIATT	78	69
		CONTRACT NO. 70629		
		ILLINOIS FED. AID PROJECT		

FINAL SURVEY		BY	DATE
NOTE BOOK	SURVEYED		
	PLOTTED		
	TEMPLATE		
	AREAS		
NO.	AREAS CHECKED		

ORIGINAL SURVEY		BY	DATE
NOTE BOOK	SURVEYED		
	PLOTTED		
	TEMPLATE		
	AREAS		
NO.	AREAS CHECKED		

MODEL: OLD_47 - 47+50.00 [Sheet]
FILE NAME: P:\22E3703-3 - 70629 White Heath\70629 Section 74-69 BR\CADD Sheets\D570629-sht-xsc.dgn

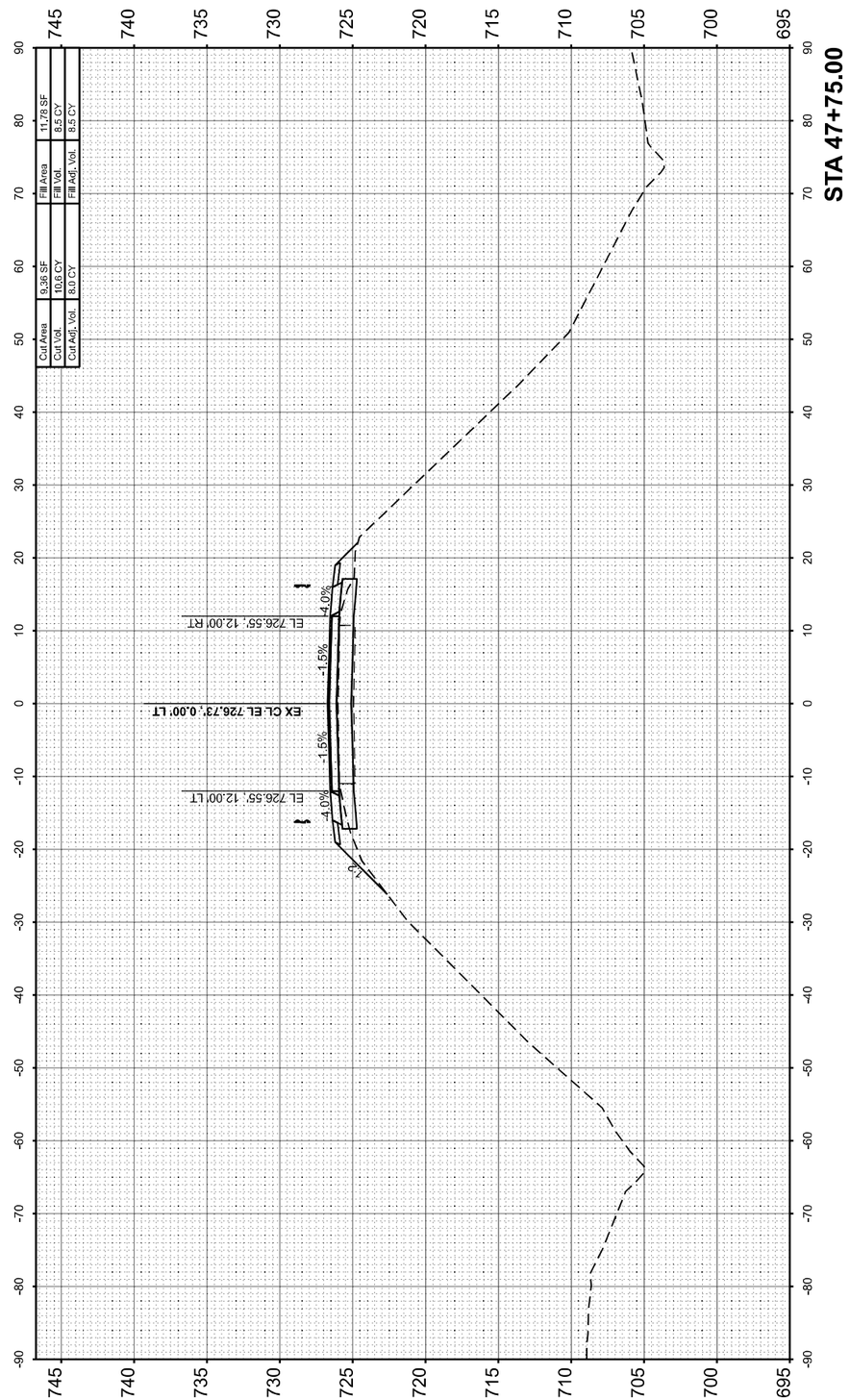

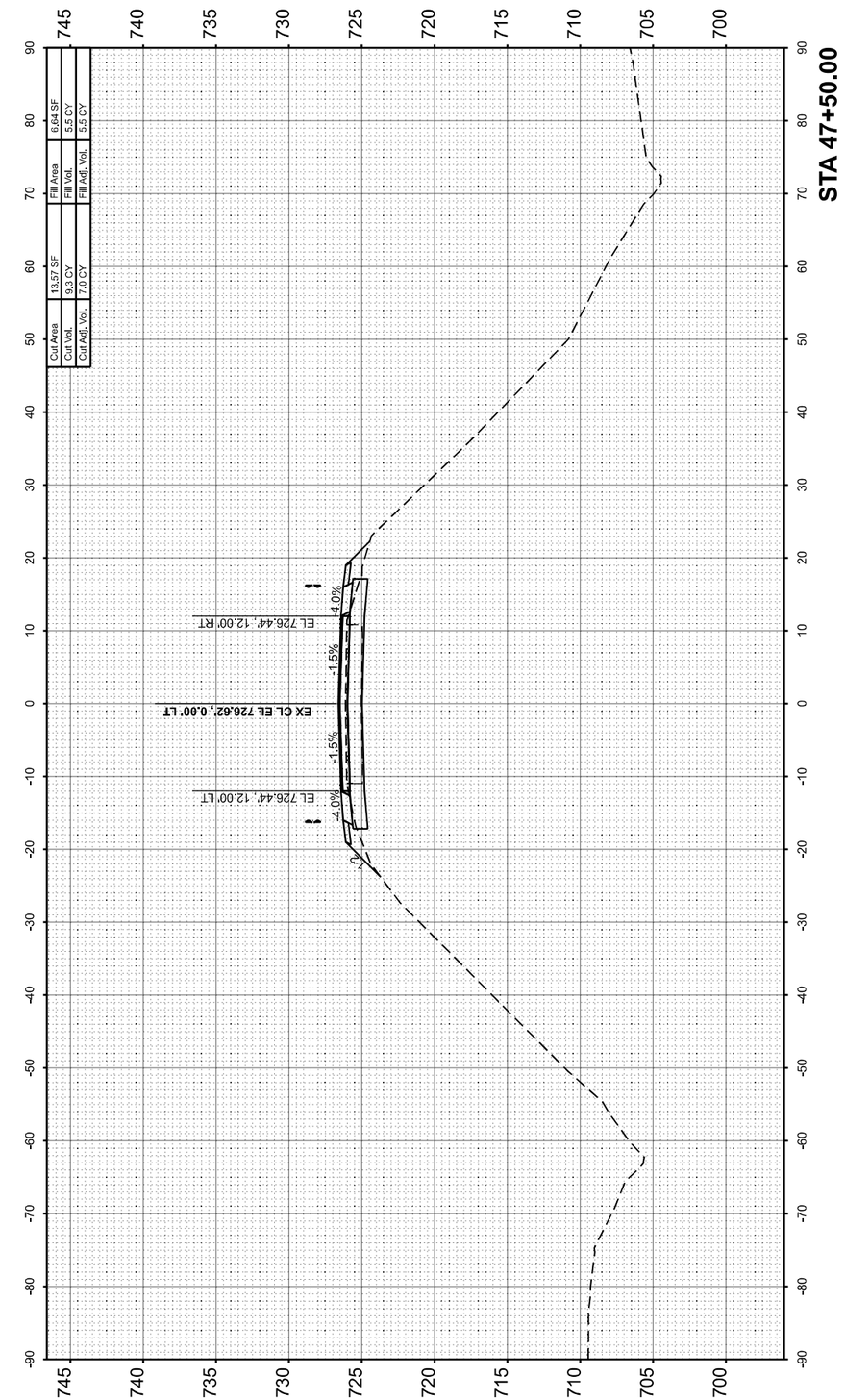

BENTON & ASSOCIATES, INC.
CONSULTING ENGINEERS / LAND SURVEYORS
1970 WEST LAFAYETTE AVE.
JACKSONVILLE, IL 62650
PHONE: 217-245-4146 FAX: 217-245-4149
IL DESIGN FIRM REGISTRATION NO. 184-000852

USER NAME = druholl	DESIGNED - DSR	REVISED -	
	DRAWN - RDS	REVISED -	
PLOT SCALE = $SCALE$	CHECKED - WJS	REVISED -	
PLOT DATE = 8/2/2024	DATE - AUGUST 2, 2024	REVISED -	

STATE OF ILLINOIS
DEPARTMENT OF TRANSPORTATION

CROSS SECTIONS
WHITE HEATH ROAD (OLD 47)

SCALE: 1"=10' | SHEET OF 10 SHEETS | STA. 47+50.00 TO STA. 47+75.00

F.A.I RTE.	SECTION	COUNTY	TOTAL SHEETS	SHEET NO.
72	74-69BR	PIATT	78	70
		CONTRACT NO. 70629		
		ILLINOIS	FED. AID PROJECT	

FINAL SURVEY		BY	DATE
NOTE BOOK	SURVEYED		
	PLOTTED		
	TEMPLATE		
	AREAS		
NO.	AREAS CHECKED		

ORIGINAL SURVEY		BY	DATE
NOTE BOOK	SURVEYED		
	PLOTTED		
	TEMPLATE		
	AREAS		
NO.	AREAS CHECKED		

MODEL: OLD_47 - 48+00.00 [Sheet]
FILE NAME: P:\22E3703-3 - 70629 White Heath\70629 Section 74-69 BR\CADD Sheets\D570629-sht-xsc.dgn

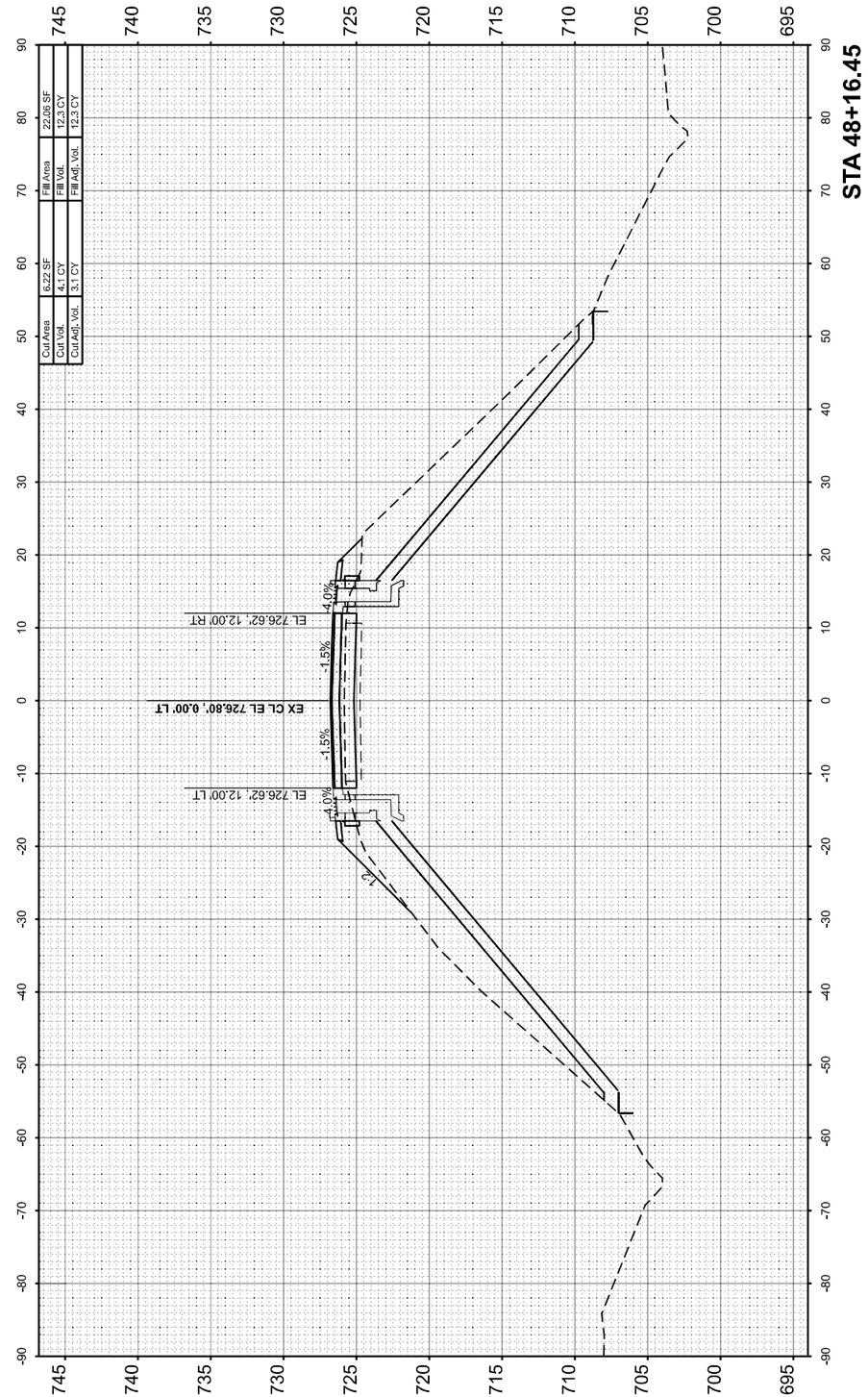

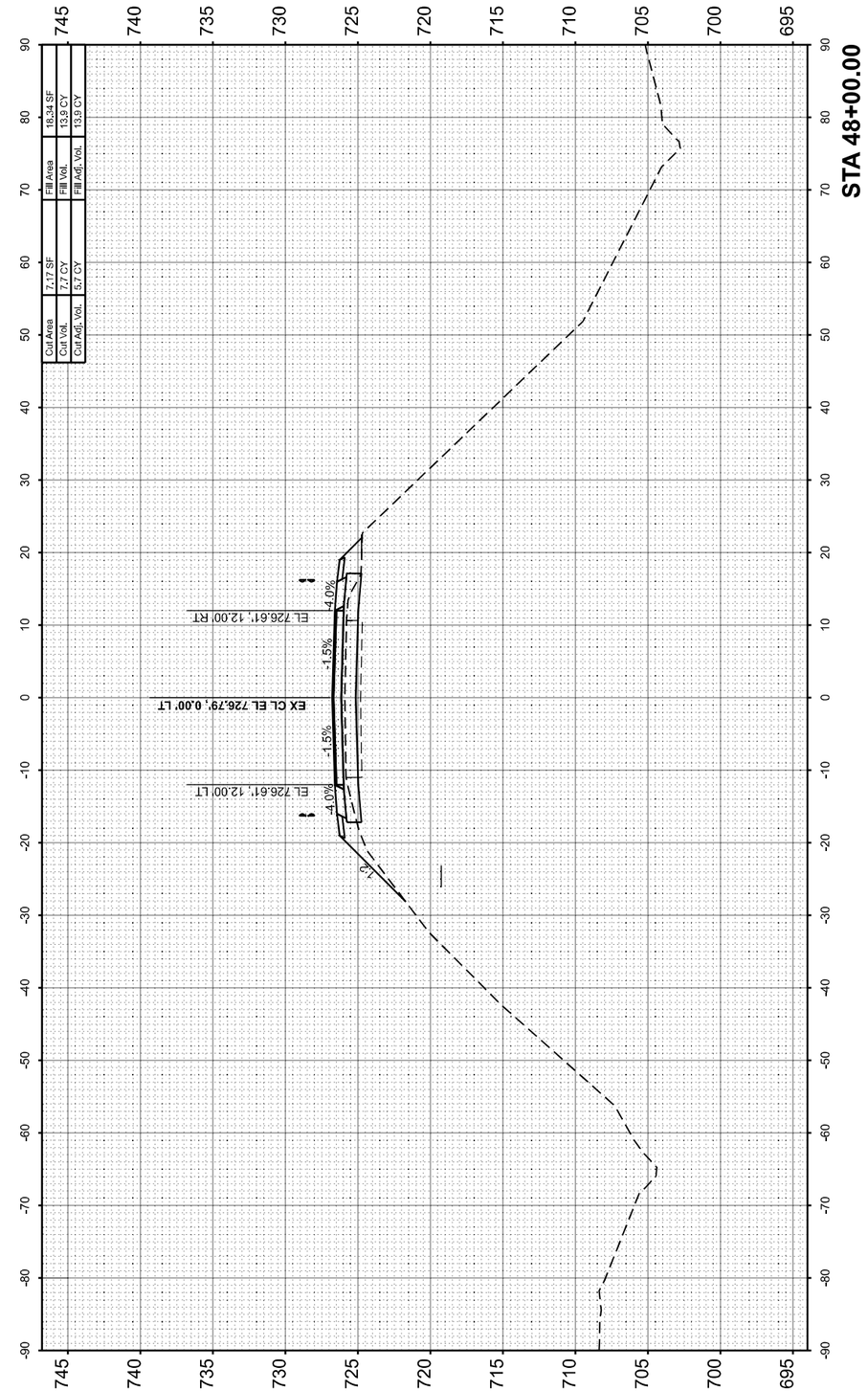

BENTON & ASSOCIATES, INC.
CONSULTING ENGINEERS / LAND SURVEYORS
1970 WEST LAFAYETTE AVE.
JACKSONVILLE, IL 62650
PHONE: 217-245-4146 FAX: 217-245-4149
IL DESIGN FIRM REGISTRATION NO. 184-000852

USER NAME = druholl	DESIGNED - DSR	REVISED -	
	DRAWN - RDS	REVISED -	
PLOT SCALE = $SCALE$	CHECKED - WJS	REVISED -	
PLOT DATE = 8/2/2024	DATE - AUGUST 2, 2024	REVISED -	

STATE OF ILLINOIS
DEPARTMENT OF TRANSPORTATION

CROSS SECTIONS
WHITE HEATH ROAD (OLD 47)

SCALE: 1"=10' | SHEET OF 10 SHEETS | STA. 48+00.00 TO STA. 48+16.45

F.A.I RTE.	SECTION	COUNTY	TOTAL SHEETS	SHEET NO.
72	74-69BR	PIATT	78	71

CONTRACT NO. 70629

ILLINOIS | FED. AID PROJECT

FINAL SURVEY		BY	DATE
NOTE BOOK	SURVEYED		
	PLOTTED		
	TEMPLATE		
	AREAS		
NO.	AREAS CHECKED		

ORIGINAL SURVEY		BY	DATE
NOTE BOOK	SURVEYED		
	PLOTTED		
	TEMPLATE		
	AREAS		
NO.	AREAS CHECKED		

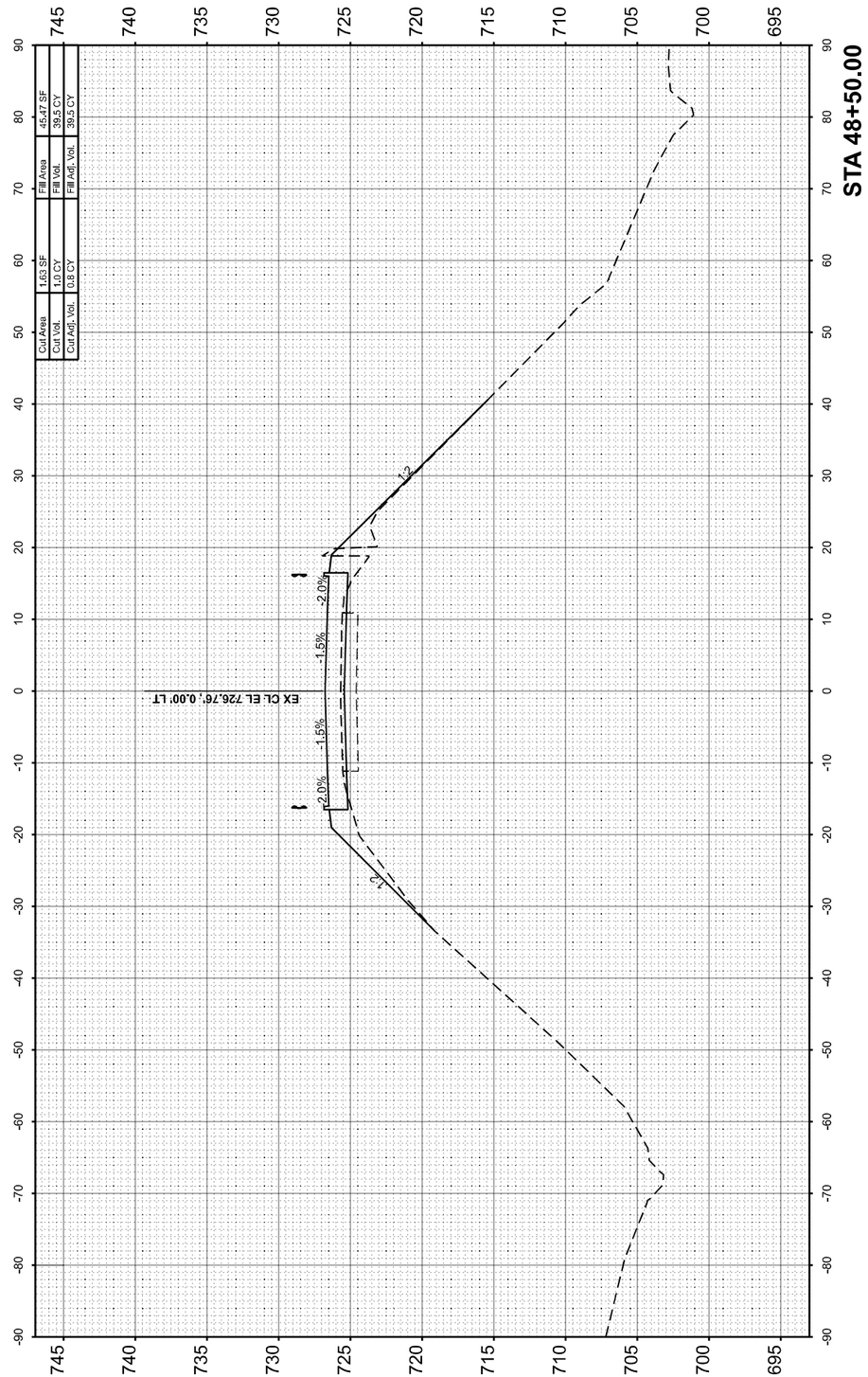

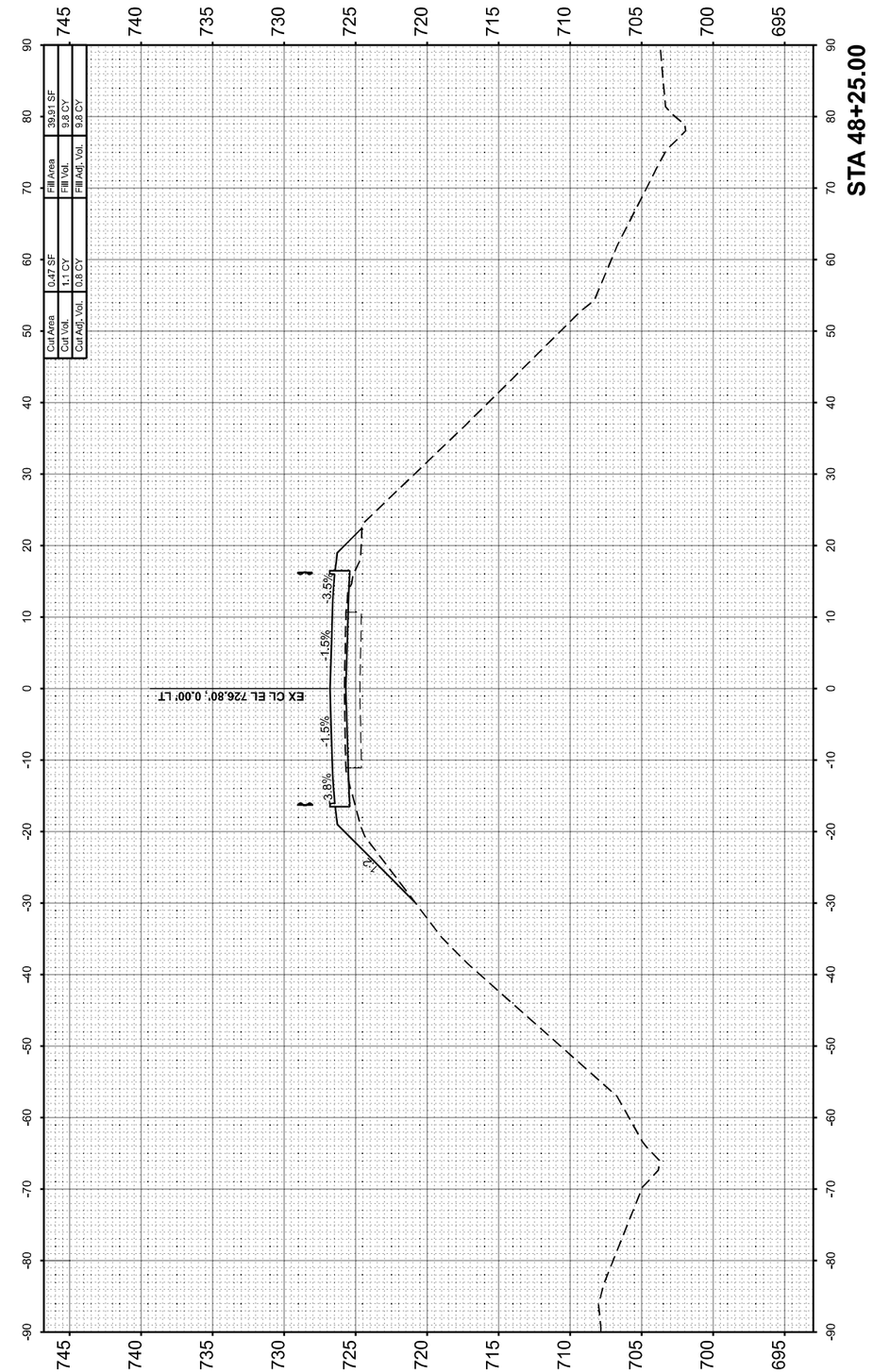

MODEL: OLD_47 - 48+25.00 [Sheet]
FILE NAME: P:\22E3703-3 - 70629 White Heath\70629 Section 74-69 BR\CADD Sheets\D570629-sht-xsc.dgn

BENTON & ASSOCIATES, INC.
CONSULTING ENGINEERS / LAND SURVEYORS
1970 WEST LAFAYETTE AVE.
JACKSONVILLE, IL 62650
PHONE: 217-245-4146 FAX: 217-245-4149
IL DESIGN FIRM REGISTRATION NO. 184-000352

USER NAME = druholl	DESIGNED - DSR	REVISED -	
	DRAWN - RDS	REVISED -	
PLOT SCALE = $SCALE$	CHECKED - WJS	REVISED -	
PLOT DATE = 8/2/2024	DATE - AUGUST 2, 2024	REVISED -	

STATE OF ILLINOIS
DEPARTMENT OF TRANSPORTATION

CROSS SECTIONS
WHITE HEATH ROAD (OLD 47)

SCALE: 1"=10' | SHEET OF 10 SHEETS | STA. 48+25.00 TO STA. 48+50.00

F.A.I RTE.	SECTION	COUNTY	TOTAL SHEETS	SHEET NO.
72	74-69BR	PIATT	78	72

CONTRACT NO. 70629

ILLINOIS | FED. AID PROJECT

FINAL SURVEY		BY	DATE
NOTE BOOK	SURVEYED		
	PLOTTED		
	TEMPLATE		
	AREAS		
NO.	AREAS CHECKED		

ORIGINAL SURVEY		BY	DATE
NOTE BOOK	SURVEYED		
	PLOTTED		
	TEMPLATE		
	AREAS		
NO.	AREAS CHECKED		

MODEL: OLD 47 - 48+75.00 [Sheet]
FILE NAME: P:\22E3703-3 - 70629 White Heath\70629 Section 74-69 BR\CADD Sheets\D570629-sht-xsc.dgn

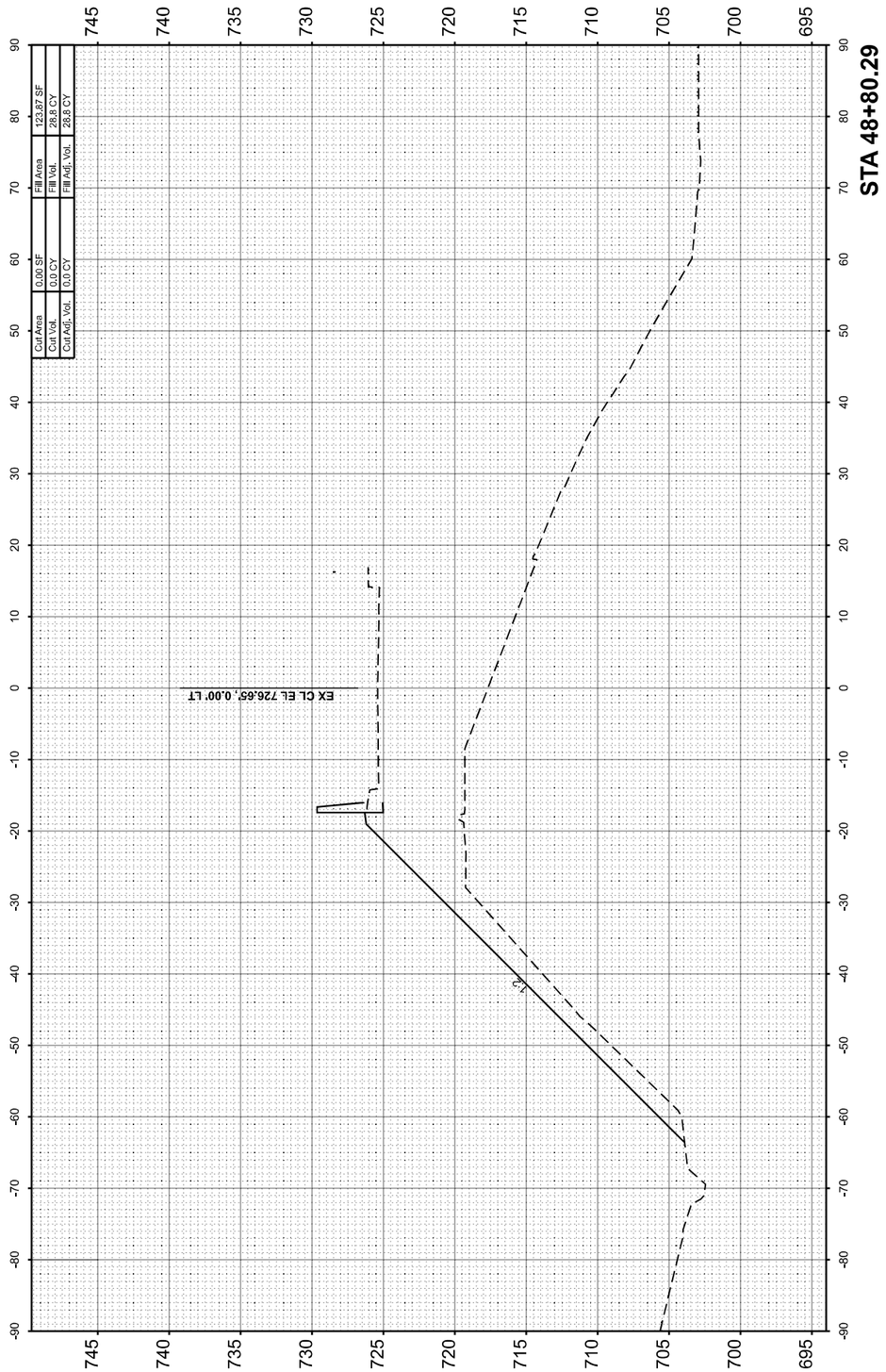

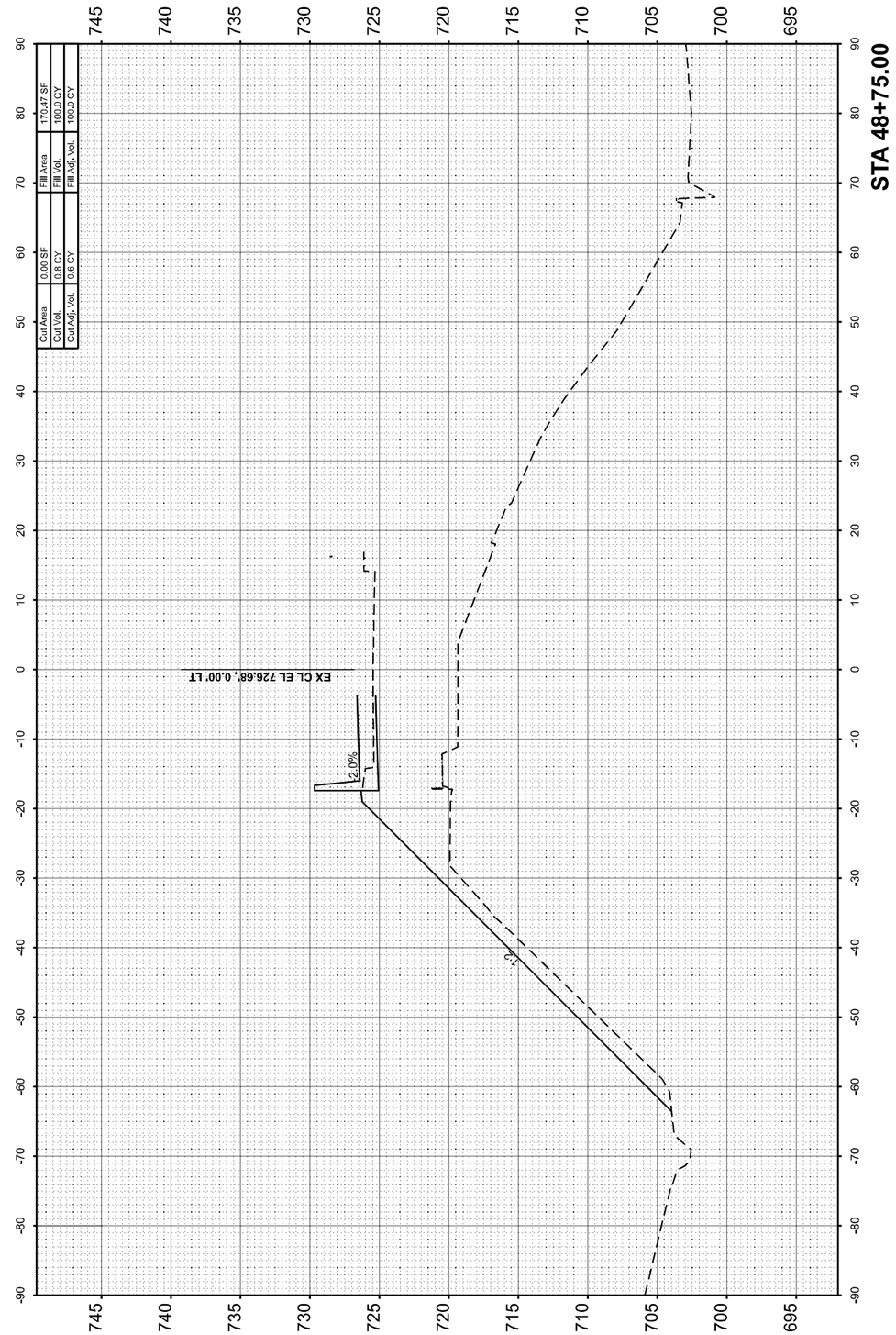

BENTON & ASSOCIATES, INC.
CONSULTING ENGINEERS / LAND SURVEYORS
1970 WEST LAFAYETTE AVE.
JACKSONVILLE, IL 62650
PHONE: 217-243-4146 FAX: 217-243-4149
IL DESIGN FIRM REGISTRATION NO. 184-000852

USER NAME = druholl	DESIGNED - DSR	REVISED -	
	DRAWN - RDS	REVISED -	
PLOT SCALE = $SCALE$	CHECKED - WJS	REVISED -	
PLOT DATE = 8/2/2024	DATE - AUGUST 2, 2024	REVISED -	

STATE OF ILLINOIS
DEPARTMENT OF TRANSPORTATION

CROSS SECTIONS
WHITE HEATH ROAD (OLD 47)

SCALE: 1"=10' | SHEET OF 10 SHEETS | STA. 48+75.00 TO STA. 48+80.29

F.A.I RTE.	SECTION	COUNTY	TOTAL SHEETS	SHEET NO.
72	74-69BR	PIATT	78	73
		CONTRACT NO. 70629		
	ILLINOIS	FED. AID PROJECT		

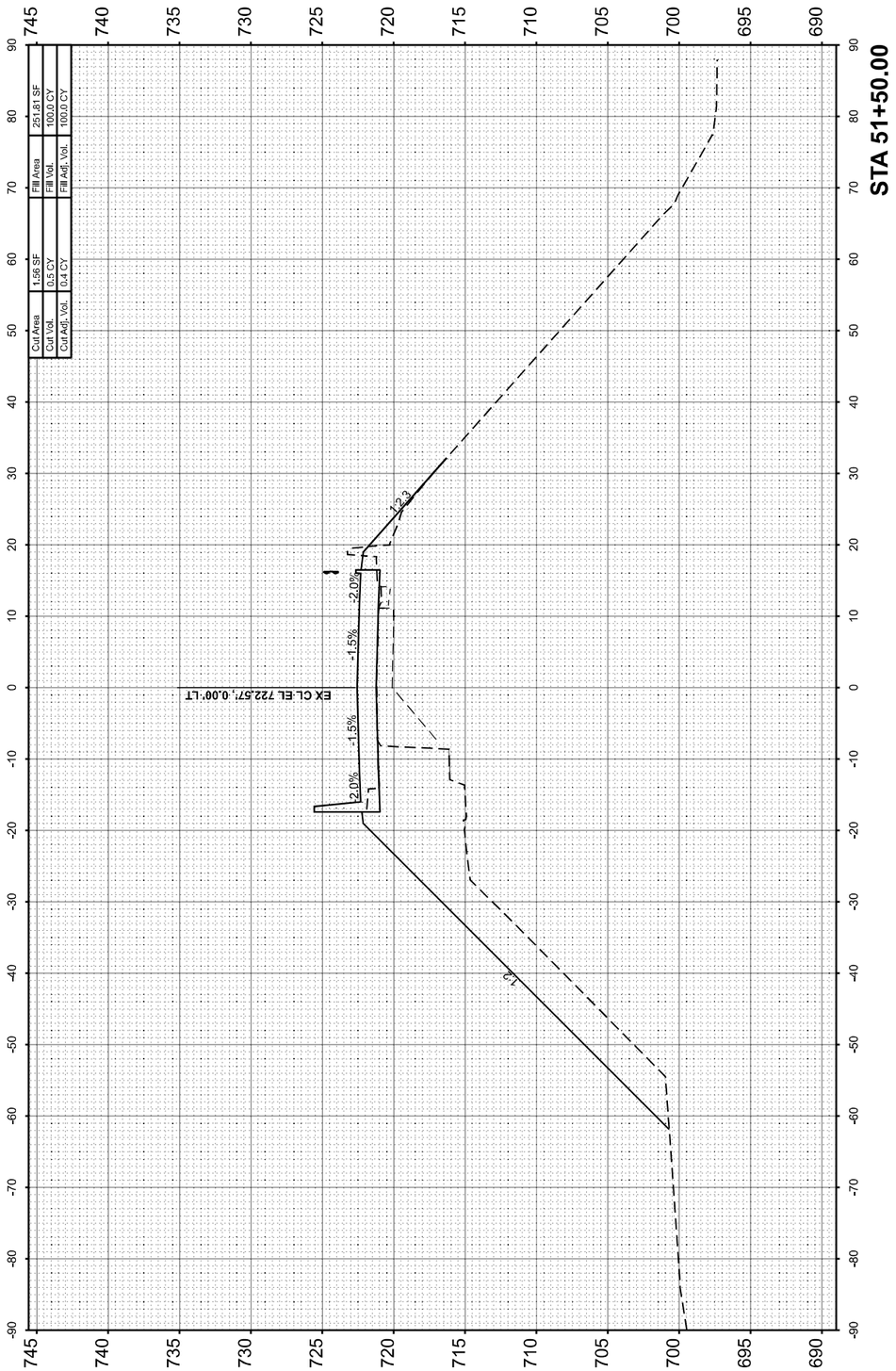

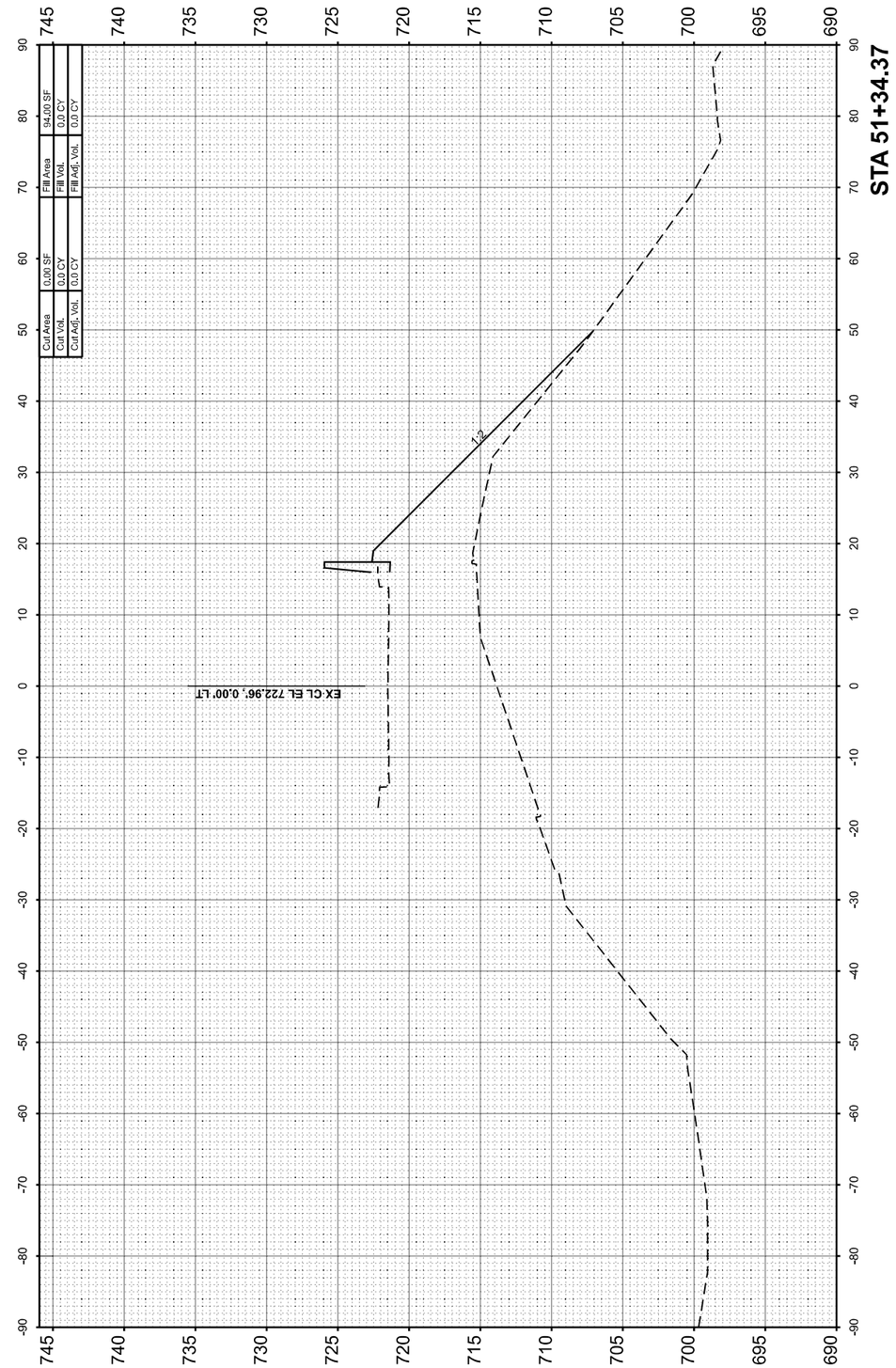

FINAL SURVEY		BY	DATE
	SURVEYED		
	PLOTTED		
NOTE BOOK	TEMPLATE		
	AREAS		
NO.	AREAS CHECKED		

ORIGINAL SURVEY		BY	DATE
	SURVEYED		
	PLOTTED		
NOTE BOOK	TEMPLATE		
	AREAS		
NO.	AREAS CHECKED		

MODEL: OLD 47 - 51+34.38 [Sheet]
FILE NAME: P:\22E3703-3 - 70629 White Heath\70629 Section 74-69 BR\CADD Sheets\D570629-sht-xsc.dgn

BENTON & ASSOCIATES, INC.
CONSULTING ENGINEERS / LAND SURVEYORS
1970 WEST LAFAYETTE AVE.
JACKSONVILLE, IL 62650
PHONE: 217-243-4146 FAX: 217-243-4149
IL DESIGN FIRM REGISTRATION NO. 184-000852

USER NAME = druholl	DESIGNED - DSR	REVISED -	
	DRAWN - RDS	REVISED -	
PLOT SCALE = $SCALE$	CHECKED - WJS	REVISED -	
PLOT DATE = 8/2/2024	DATE - AUGUST 2, 2024	REVISED -	

STATE OF ILLINOIS
DEPARTMENT OF TRANSPORTATION

CROSS SECTIONS
WHITE HEATH ROAD (OLD 47)

SCALE: 1"=10' | SHEET OF 10 SHEETS | STA. 51+34.37 TO STA. 51+50.00

F.A.I RTE.	SECTION	COUNTY	TOTAL SHEETS	SHEET NO.
72	74-69BR	PIATT	78	74
		CONTRACT NO. 70629		
		ILLINOIS FED. AID PROJECT		

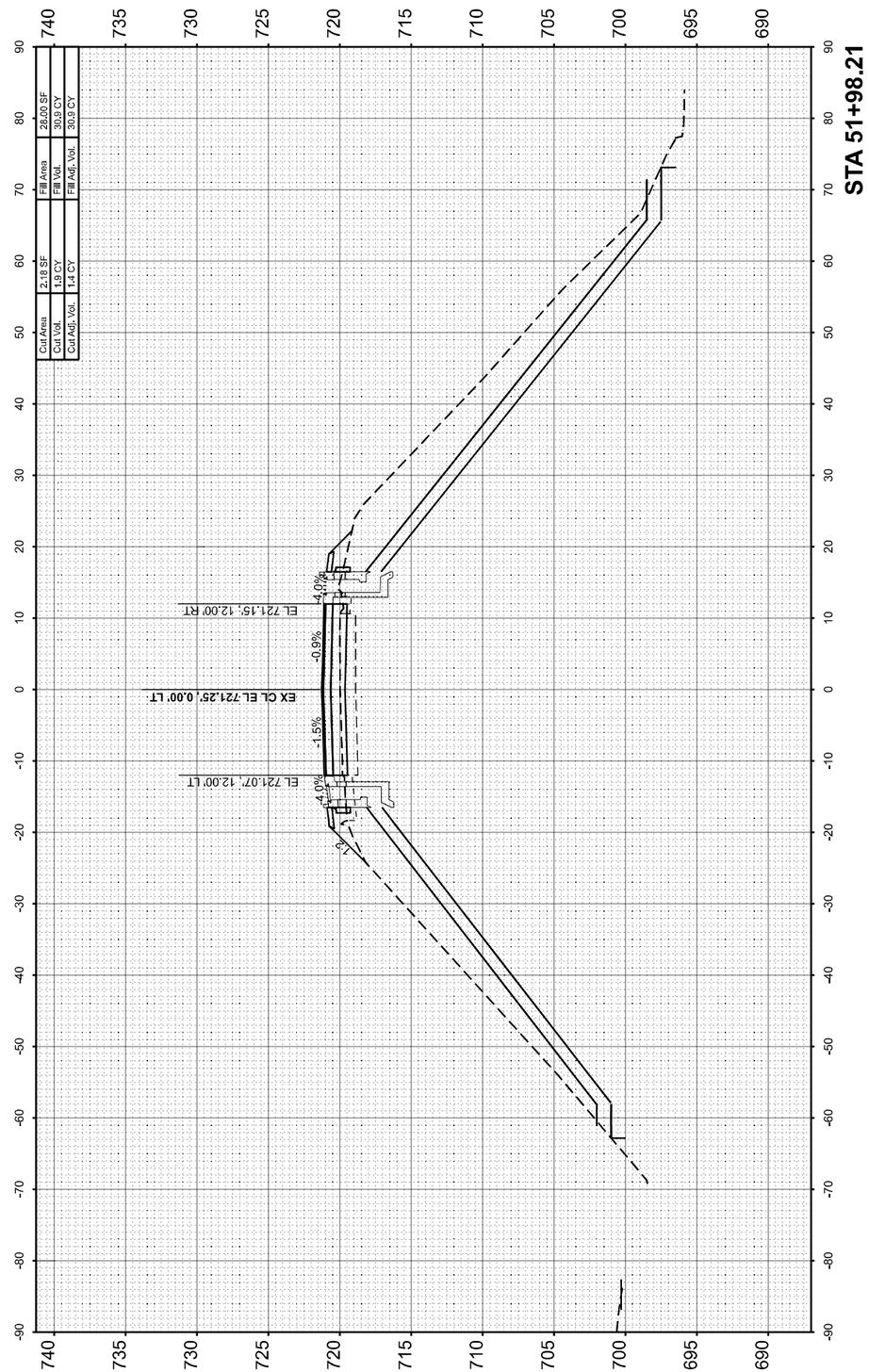

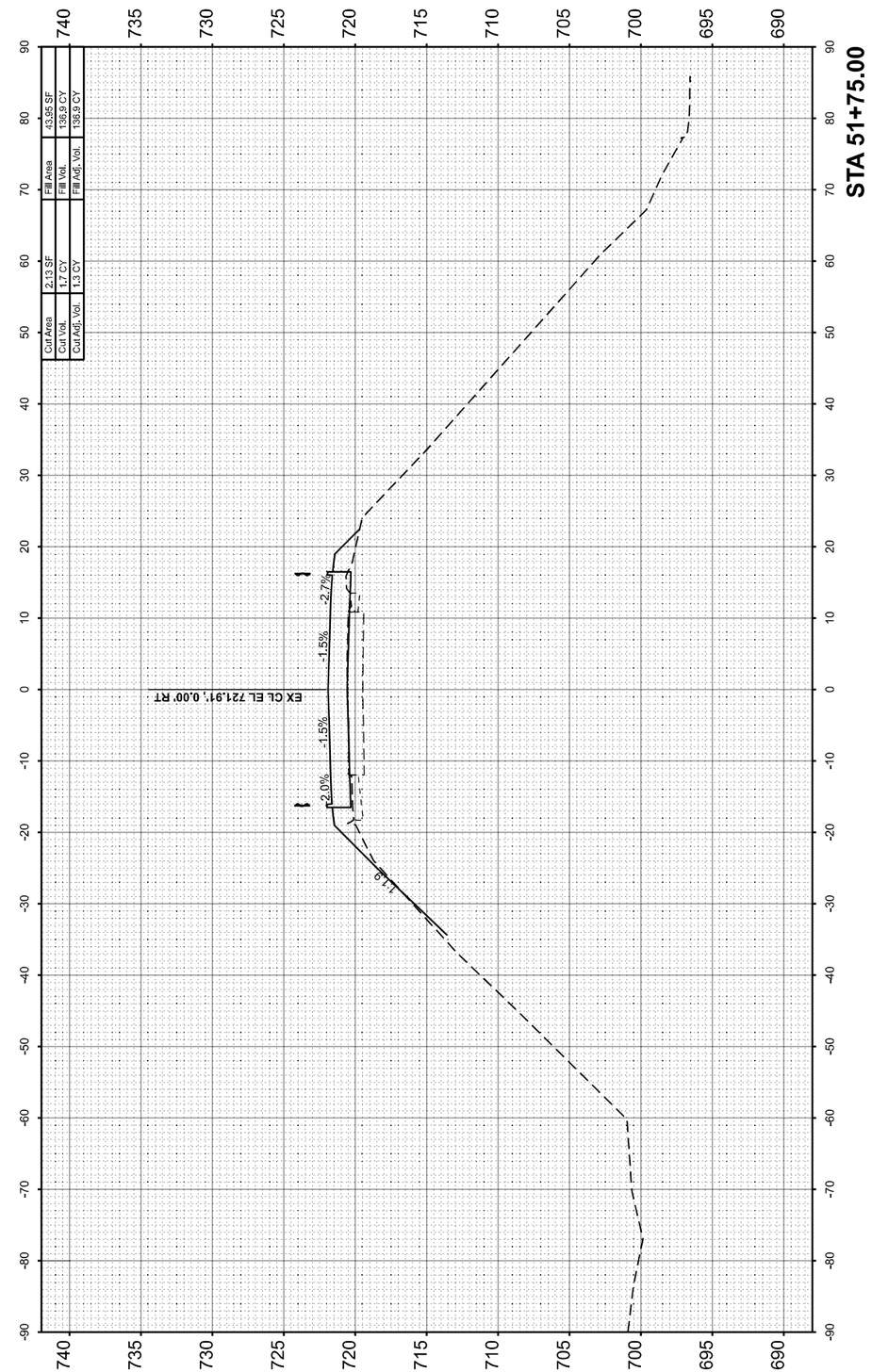

FINAL SURVEY		BY	DATE
NOTE BOOK	SURVEYED		
	PLOTTED		
	TEMPLATE		
	AREAS		
NO.	AREAS CHECKED		

ORIGINAL SURVEY		BY	DATE
NOTE BOOK	SURVEYED		
	PLOTTED		
	TEMPLATE		
	AREAS		
NO.	AREAS CHECKED		

MODEL: OLD_47 - 51+75.00 [Sheet]
FILE NAME: P:\22E3703-3 - 70629 White Heath\70629 Section 74-69 BR\CADD Sheets\D570629-sht-xsc.dgn

BENTON & ASSOCIATES, INC.
CONSULTING ENGINEERS / LAND SURVEYORS
1970 WEST LAFAYETTE AVE.
JACKSONVILLE, IL 62650
PHONE: 217-245-4146 FAX: 217-245-4149
IL DESIGN FIRM REGISTRATION NO. 184-000032

USER NAME = druholl	DESIGNED - DSR	REVISED -	
	DRAWN - RDS	REVISED -	
PLOT SCALE = $SCALE$	CHECKED - WJS	REVISED -	
PLOT DATE = 8/2/2024	DATE - AUGUST 2, 2024	REVISED -	

STATE OF ILLINOIS
DEPARTMENT OF TRANSPORTATION

CROSS SECTIONS
WHITE HEATH ROAD (OLD 47)

SCALE: 1"=10' | SHEET OF 10 SHEETS | STA. 51+75.00 TO STA. 51+98.21

F.A.I RTE.	SECTION	COUNTY	TOTAL SHEETS	SHEET NO.
72	74-69BR	PIATT	78	75
		CONTRACT NO. 70629		
		ILLINOIS FED. AID PROJECT		

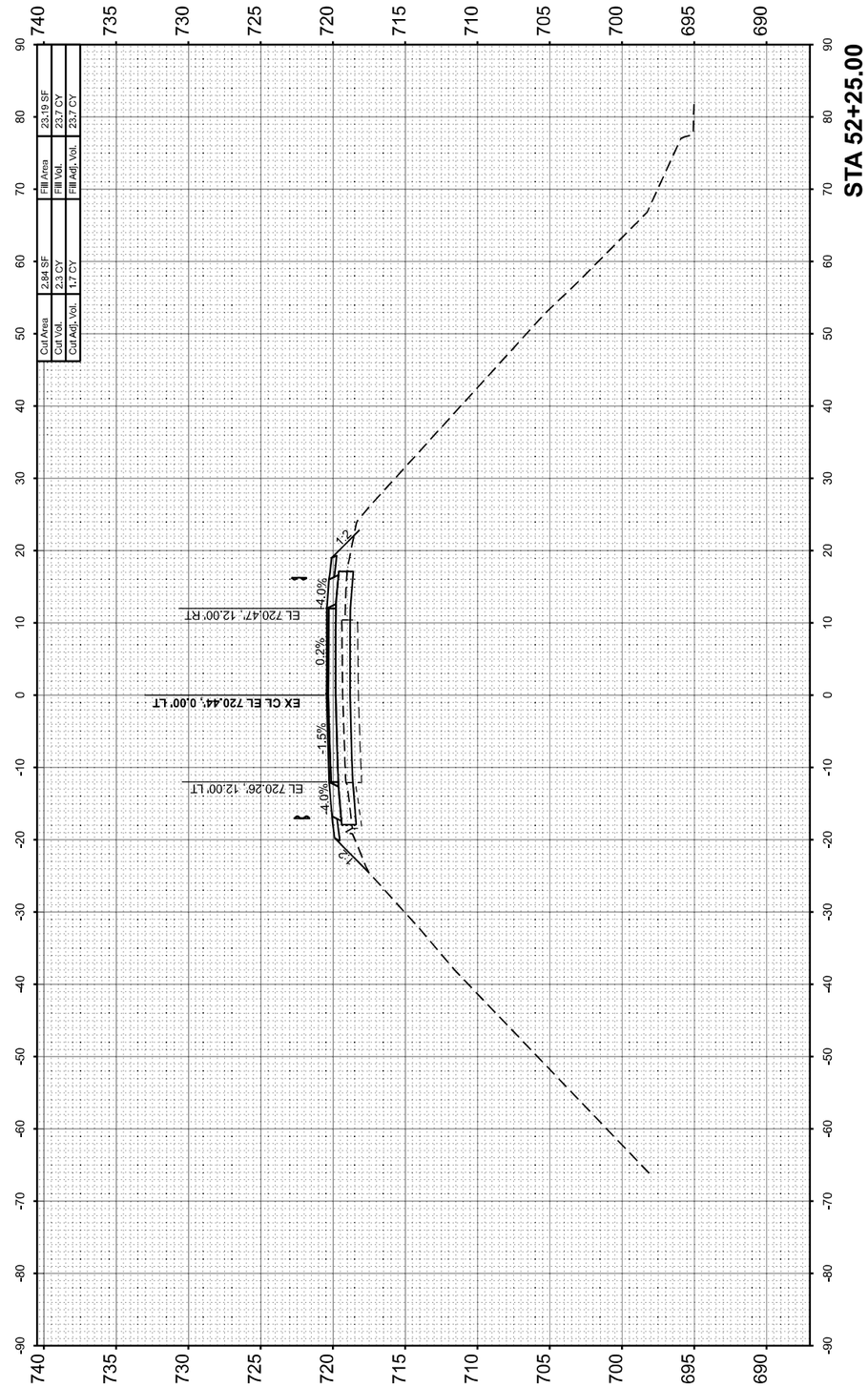

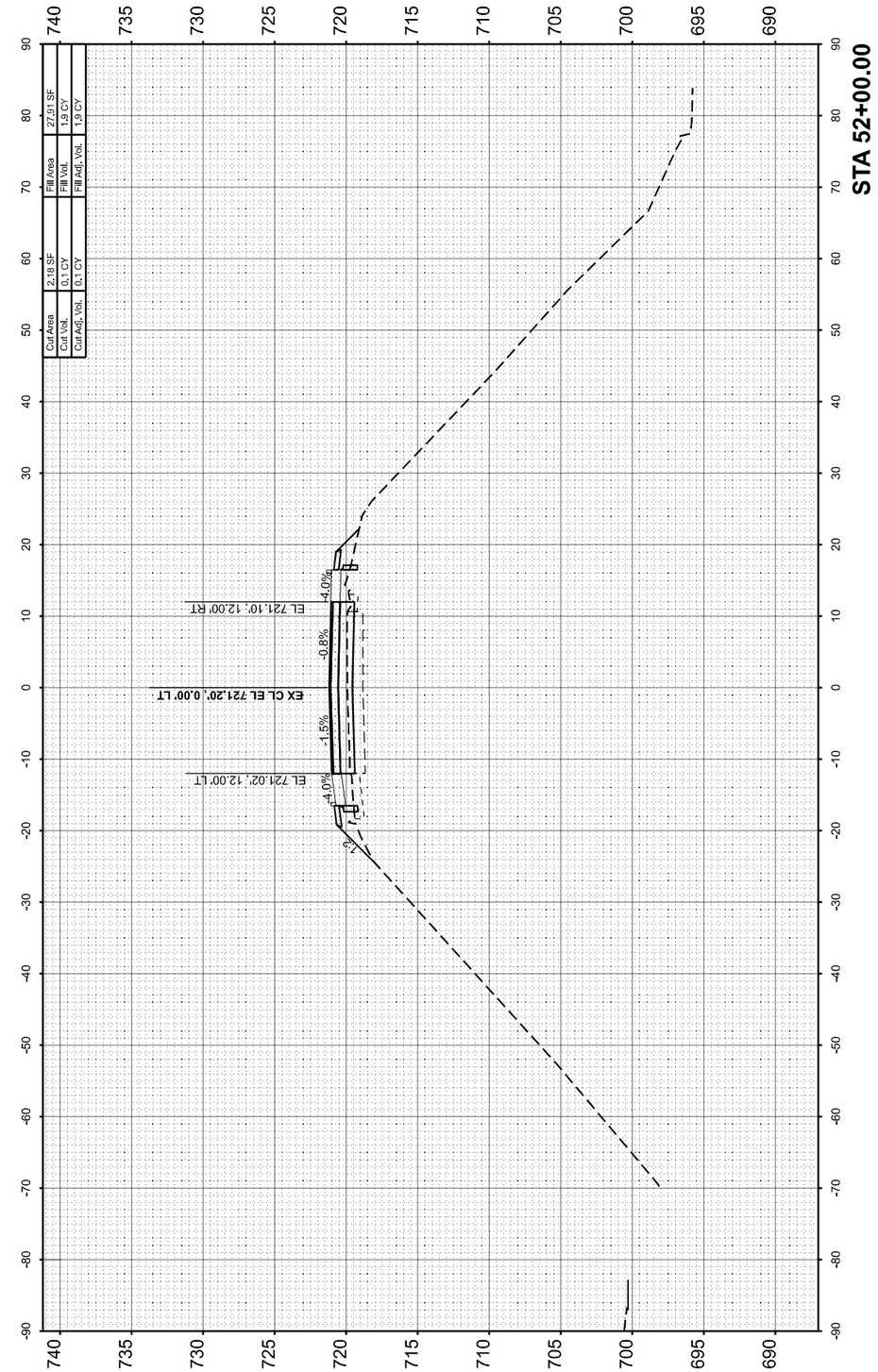

FINAL SURVEY		BY	DATE
	SURVEYED		
	PLOTTED		
NOTE BOOK	TEMPLATE		
	AREAS		
NO.	AREAS CHECKED		

ORIGINAL SURVEY		BY	DATE
	SURVEYED		
	PLOTTED		
NOTE BOOK	TEMPLATE		
	AREAS		
NO.	AREAS CHECKED		

MODEL: OLD 47 - 52+00.00 [Sheet]
FILE NAME: P:\22E3703-3 - 70629 White Heath\70629 Section 74-69 BR\CADD Sheets\D570629-sht-xsc.dgn

BENTON & ASSOCIATES, INC.
CONSULTING ENGINEERS / LAND SURVEYORS
1910 WEST LAFAYETTE AVE.
JACKSONVILLE, IL 62650
PHONE: 217-243-4146 FAX: 217-243-4149
IL DESIGN FIRM REGISTRATION NO. 184-000852

USER NAME = druholl	DESIGNED - DSR	REVISED -
	DRAWN - RDS	REVISED -
PLOT SCALE = $SCALE$	CHECKED - WJS	REVISED -
PLOT DATE = 8/2/2024	DATE - AUGUST 2, 2024	REVISED -

STATE OF ILLINOIS
DEPARTMENT OF TRANSPORTATION

CROSS SECTIONS
WHITE HEATH ROAD (OLD 47)

SCALE: 1"=10' | SHEET OF 10 SHEETS | STA. 52+00.00 TO STA. 52+25.00

F.A.I RTE.	SECTION	COUNTY	TOTAL SHEETS	SHEET NO.
72	74-69BR	PIATT	78	76
		CONTRACT NO. 70629		
		ILLINOIS	FED. AID PROJECT	

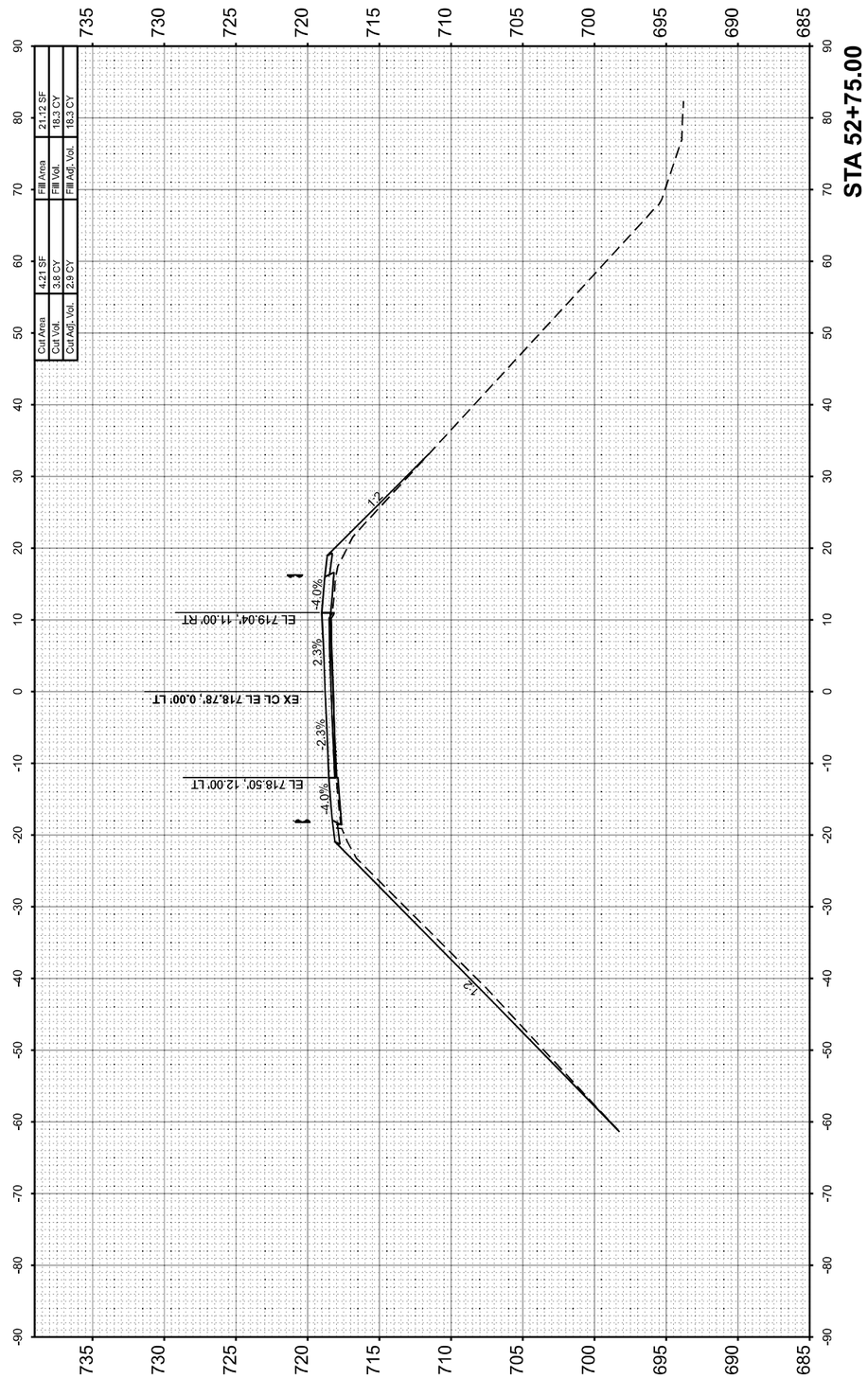

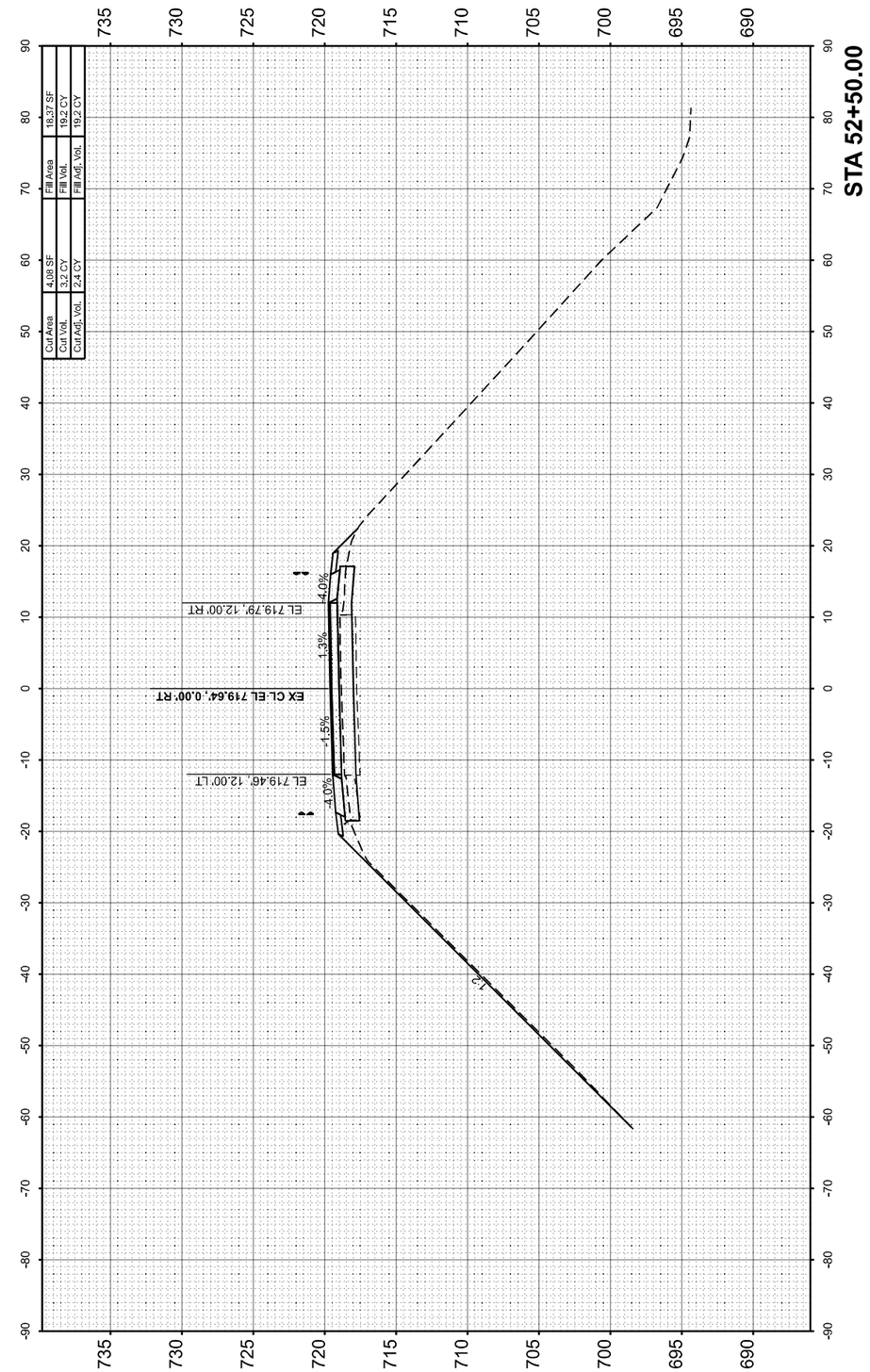

FINAL SURVEY		BY	DATE
NOTE BOOK	SURVEYED		
	PLOTTED		
	TEMPLATE		
	AREAS		
NO.	AREAS CHECKED		

ORIGINAL SURVEY		BY	DATE
NOTE BOOK	SURVEYED		
	PLOTTED		
	TEMPLATE		
	AREAS		
NO.	AREAS CHECKED		

MODEL: OLD_47 - 52+50.00 [Sheet]
FILE NAME: P:\22E3703-3 - 70629 White Heath\70629 Section 74-69 BR\CADD Sheets\D570629-sht-xsc.dgn

BENTON & ASSOCIATES, INC.
CONSULTING ENGINEERS / LAND SURVEYORS
1970 WEST LAFAYETTE AVE.
JACKSONVILLE, IL 62650
PHONE: 217-243-1166 FAX: 217-243-1169
IL DESIGN FIRM REGISTRATION NO. 184-000352

USER NAME = druholl	DESIGNED - DSR	REVISED -	
	DRAWN - RDS	REVISED -	
PLOT SCALE = $SCALE$	CHECKED - WJS	REVISED -	
PLOT DATE = 8/2/2024	DATE - AUGUST 2, 2024	REVISED -	

STATE OF ILLINOIS
DEPARTMENT OF TRANSPORTATION

CROSS SECTIONS
WHITE HEATH ROAD (OLD 47)

SCALE: 1"=10' | SHEET OF 10 SHEETS | STA. 52+50.00 TO STA. 52+75.00

F.A.I RTE.	SECTION	COUNTY	TOTAL SHEETS	SHEET NO.
72	74-69BR	PIATT	78	77
		CONTRACT NO. 70629		
		ILLINOIS	FED. AID PROJECT	

ORIGINAL SURVEY		BY	DATE
NOTE BOOK	SURVEYED		
	PLOTTED		
	TEMPLATE		
	AREAS		
NO.	AREAS CHECKED		

FINAL SURVEY		BY	DATE
NOTE BOOK	SURVEYED		
	PLOTTED		
	TEMPLATE		
	AREAS		
NO.	AREAS CHECKED		

MODEL: OLD_47 - 52+99,99 [Sheet]
FILE NAME: P:\22E3703-3 - 70629 White Heath\70629 Section 74-69 BR\CADD Sheets\D570629-sht-xsc.dgn

BENTON & ASSOCIATES, INC.
CONSULTING ENGINEERS / LAND SURVEYORS
1811 N. MAIN STREET
MACOMB, ILLINOIS
PHONE: 309-833-2181 FAX: 309-833-4159
IL 184-000576 IDPR REGISTRATION NO. 184000532

USER NAME = druhdl	DESIGNED - DSR	REVISED -	
	DRAWN - RDS	REVISED -	
PLOT SCALE = 5$SCALE$	CHECKED - WJS	REVISED -	
PLOT DATE = 8/2/2024	DATE - AUGUST 2, 2024	REVISED -	

STATE OF ILLINOIS
DEPARTMENT OF TRANSPORTATION

CROSS SECTIONS
WHITE HEATH ROAD (OLD 47)

SCALE: 1"=10' | SHEET OF 10 SHEETS | STA. 53+00.00 TO STA. 53+00.00

F.A.I. RTE.	SECTION	COUNTY	TOTAL SHEETS	SHEET NO.
72	74-69BR	PIATT	78	78

CONTRACT NO. 70629
ILLINOIS FED. AID PROJECT

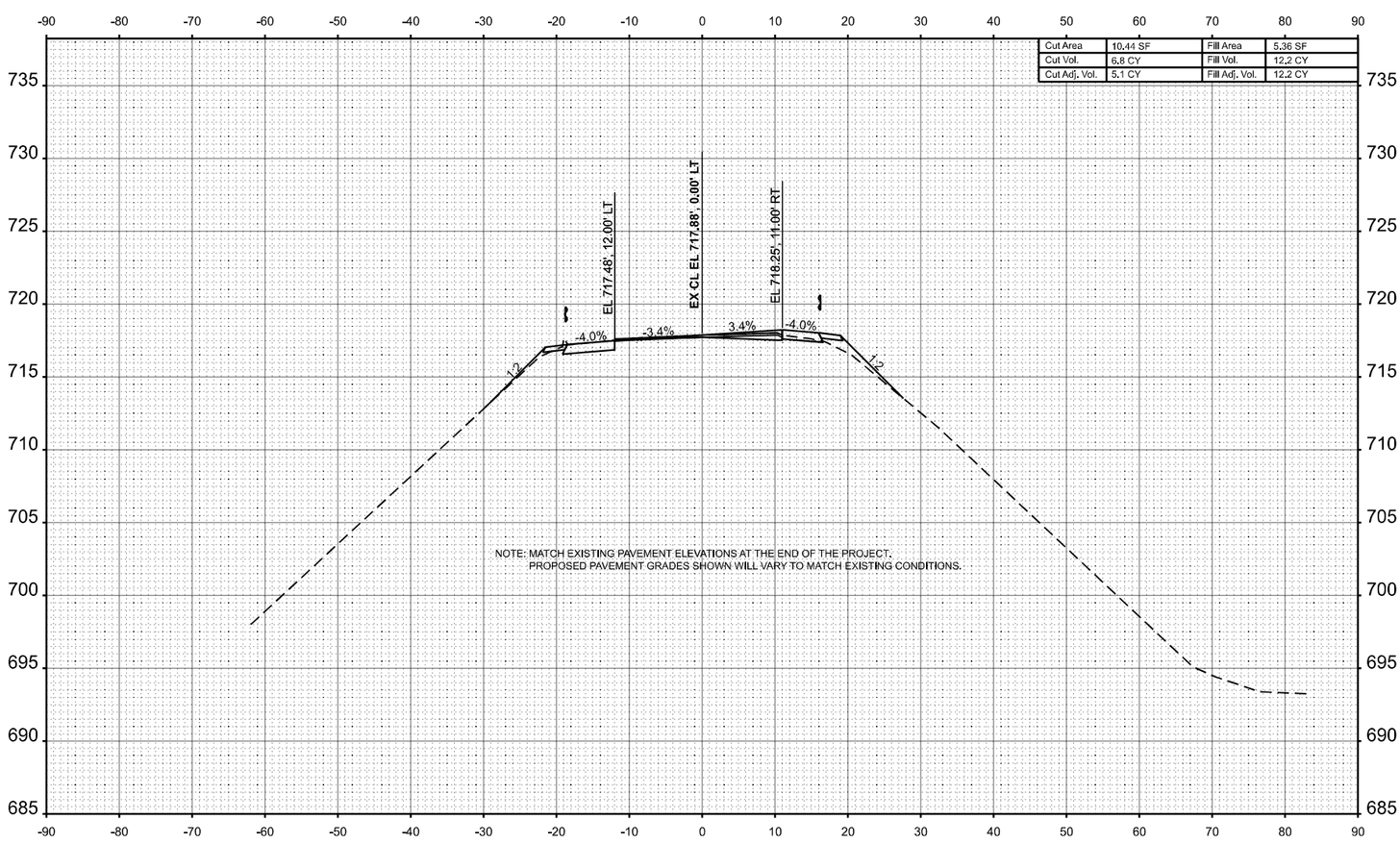

Cut Area	10.44 SF	Fill Area	5.36 SF
Cut Vol.	6.8 CY	Fill Vol.	12.2 CY
Cut Adj. Vol.	5.1 CY	Fill Adj. Vol.	12.2 CY

STA 53+00.00