STATE OF ILLINOIS
DEPARTMENT OF TRANSPORTATION

VARIOUS ROUTES
D9 BRIDGE PAINTING FY 09-1
VARIOUS COUNTIES
CONTRACT 78093
FOR INFORMATION ONLY
SHEET 24 OF 31

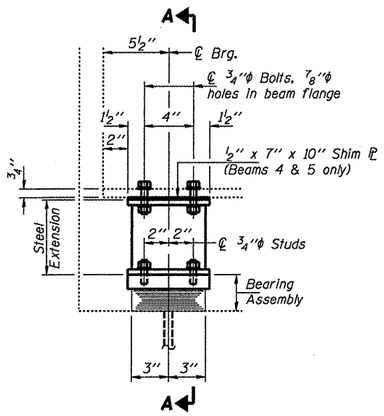

ELEVATION AT ABUTMENT

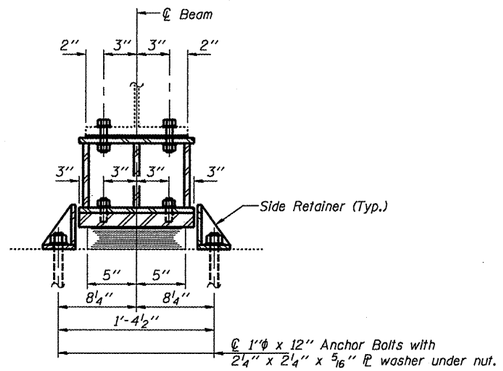

SECTION A-A

TYPE I ELASTOMERIC EXP. BRG.

BEAM REACTIONS

RP	(K)	11.7
R4	(K)	26.5
Imp.	(K)	8.0
R (Total)	(K)	46.2

Notes:
Diaphragm removal and reinstallation may be required to facilitate drilling holes. Cost included with Furnishing and Erecting Structural Steel.
New steel extensions, shim plates and connection bolts are included with Furnishing and Erecting Structural Steel.
Prior to ordering any material, the Contractor shall verify in the field all bearing height and shim thickness dimensions.
Min. jack capacity = 25 Tons.
Anchor bolts shall be ASTM F1554 all-thread (or an Engineer-approved alternate material) of the grade(s) and diameter(s) specified. ASTM A307 Grade C anchor bolts may be used in lieu of ASTM F1554 Grade 36 (Fy=36ksi). The corresponding specified grade of AASHTO M314 anchor bolts may be used in lieu of ASTM F1554.
Drilled and set anchor bolts shall be installed according to Article 521.06 of the Standard Specifications.
Side retainers shall be included in the cost of Elastomeric Bearing Assembly, Type I.

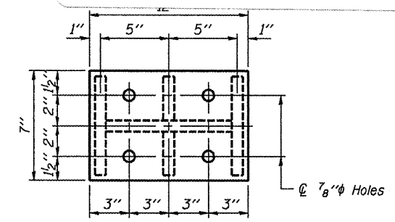

PLAN TOP AND BOTTOM PLATE

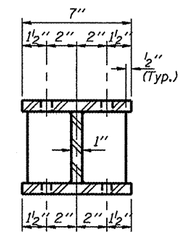

SECTION B-B

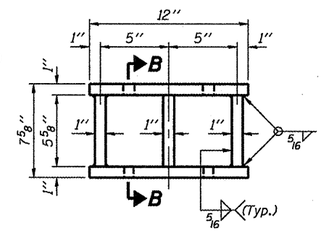

STEEL EXTENSION DETAIL

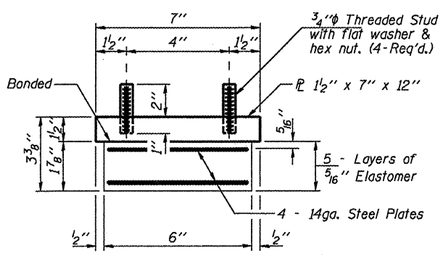

BEARING ASSEMBLY

Note:
Shim plates shall not be placed under Bearing Assembly.

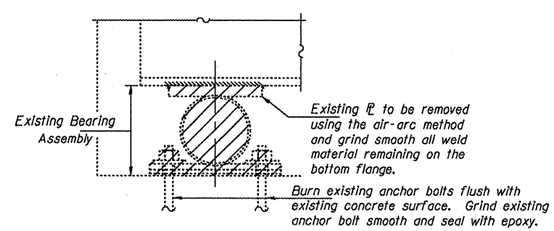

EXISTING BEARING REMOVAL DETAIL

Cost included with Jack and Remove Existing Bearings.

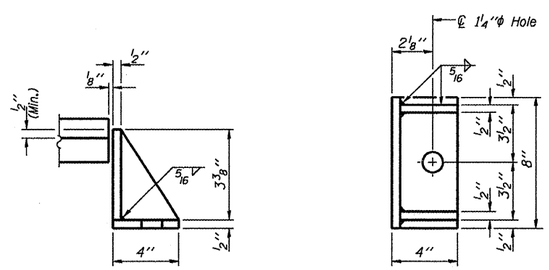

SIDE RETAINER

Equivalent rolled angle with stiffeners will be allowed in lieu of welded plates.

BILL OF MATERIAL

Item	Unit	Total
Elastomeric Bearing Assembly Type I	Each	16
Jack and Remove Existing Bearings	Each	16
Furnishing and Erecting Structural Steel	Pound	1530
Anchor Bolts	Each	32

DESIGNED	DAB
CHECKED	AJB
DRAWN	baliva
CHECKED	DAB AJB

TYI/REPS 11-01-2006

BRIDGE REPAIRS
FA 132, OVER FRENCH CREEK
WHITE COUNTY
SN 097-0005

BRIDGE NO. 3