CONTRACT NO. 76A34

F.A.P. RTE.	SECTION	COUNTY	TOTAL SHEETS	SHEET NO.
609	***	ST. CLAIR	350	121
STA.		TO STA.		
FED. ROAD DIST. NO.	ILLINOIS	FED. AID PROJECT		

*** 76RS-3, 76-2BR-21

DESIGN		
INT.	DATE	REASON

PLOTS & CHECKS			
INT.	DATE	NO.	REASON

CHECKS		
INT.	DATE	REASON

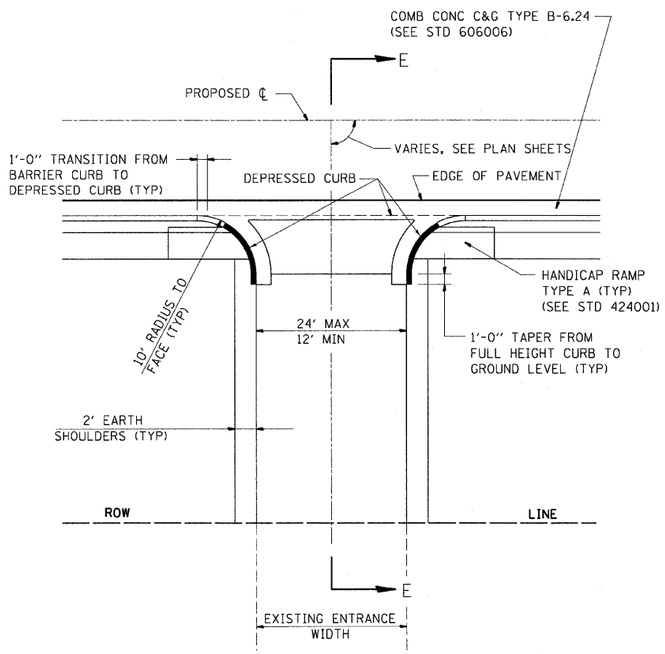

PE DETAIL E

PRIVATE ENTRANCE WITH PCC SIDEWALK
ADJACENT TO ROADWAY PAVEMENT WITH
CONCRETE CURB & GUTTER TYPE B-6.24

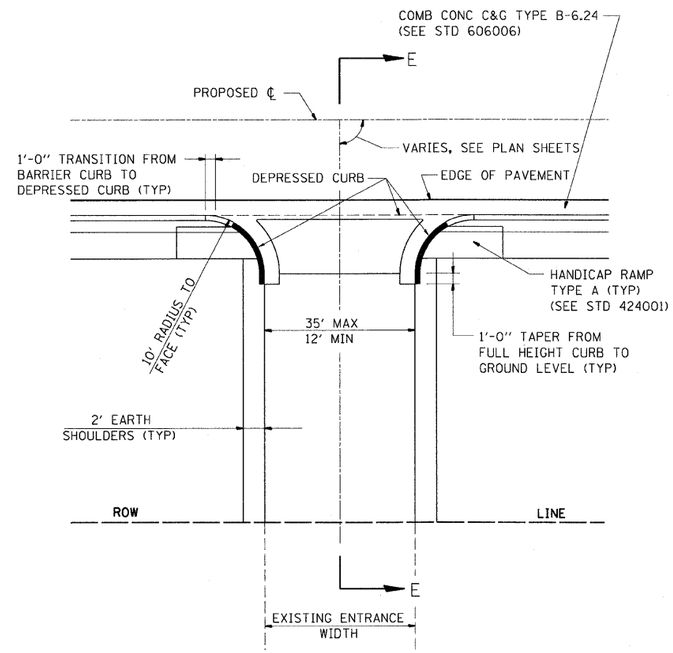

CE DETAIL E

COMMERCIAL ENTRANCE WITH PCC SIDEWALK
ADJACENT TO ROADWAY PAVEMENT WITH
CONCRETE CURB & GUTTER TYPE B-6.24

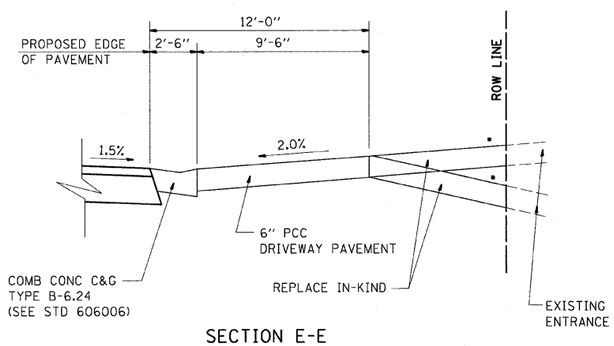

SECTION E-E

* SEE CROSS SECTIONS FOR SLOPE
** OMIT AT CONCRETE ENTRANCES
SEE PLANS FOR EXISTING SURFACE TYPE

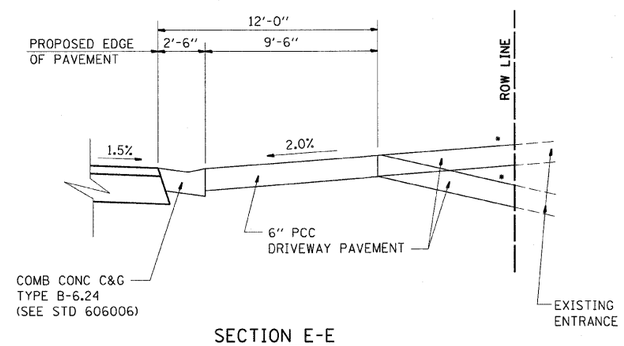

SECTION E-E

* SEE CROSS SECTIONS FOR SLOPE
** OMIT AT CONCRETE ENTRANCES
SEE PLANS FOR EXISTING SURFACE TYPE

TYPE OF ENTRANCE	EXISTING MATERIAL	NEW ENTRANCE MATERIAL (BEYOND RADIUS RETURNS OR TAPERS)				
		PCC DRIVEWAY PAVEMENT (6")	PCC DRIVEWAY PAVEMENT (8")	INCIDENTAL HOT-MIX ASPHALT SURFACING, (2")	AGGREGATE BASE COURSE, TYPE B (6")	AGGREGATE SURFACE COURSE, TYPE B (8")
PRIVATE	CONCRETE	X				
	HMA			X	X	
	AGGREGATE					X
COMMERCIAL	CONCRETE		X			
	HMA		X			
	AGGREGATE		X			

REVISIONS	
NAME	DATE
IDOT REVIEW	MAR/08

ILLINOIS DEPARTMENT OF TRANSPORTATION

ENTRANCE DETAIL

FAP 609 (ILLINOIS ROUTE 163)
SECTION 76RS-3, 76-2BR-21
ST. CLAIR COUNTY

SCALE: VERT. HORIZ.
DATE: 11/26/02

DRAWN BY: BISHOP
DESIGNED BY: COLBROOK
CHECKED BY: COLBROOK

GREENE & BRADFORD, INC.
OF SPRINGFIELD
CONSULTING ENGINEERS
3500 CONSTITUTION DRIVE
SPRINGFIELD, ILLINOIS 62707
TEL: (217) 793-8844

COMPUTER FILE NO. ENTDETAILS-1
PROJECT: 02076
03/27/07-GJM

IDOTPL50 1"=50' 8/24/98