INSIDE DIAMETER OF STORM SEWER (INCHES)	MAXIMUM TRENCH WIDTH
6	3'-7"
8	3'-9"
12	4'-2"
15	4'-6"
18	4'-9"
21	5'-0"
24	5'-4"
27	5'-7"
30	5'-11"
36	6'-6"
42	7'-1"
48	7'-8"
54	8'-3"

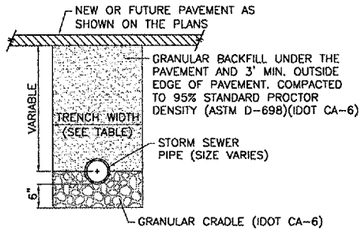

ALL PAVED AREAS

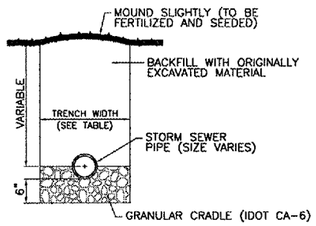

NON-PAVED AREAS

TRENCH DETAILS - STORM SEWER

N.T.S.

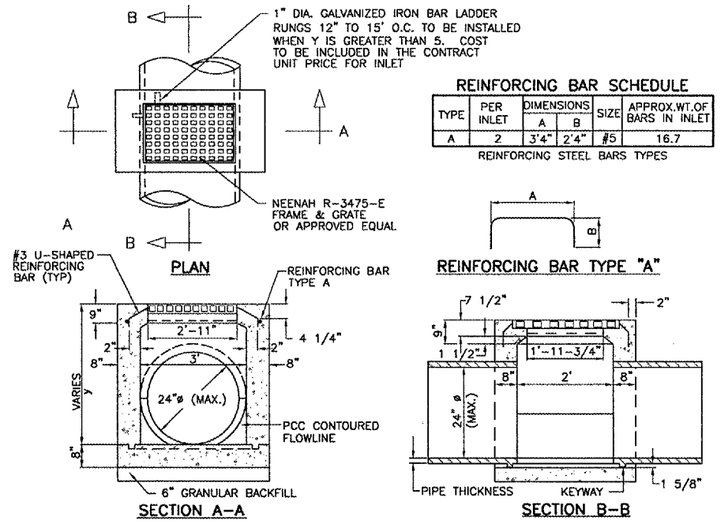

REINFORCING BAR SCHEDULE

TYPE	PER INLET	DIMENSIONS A	DIMENSIONS B	SIZE	APPROX.WT.OF BARS IN INLET
A	2	3'4"	2'4"	#5	16.7

REINFORCING STEEL BARS TYPES

REINFORCING BAR TYPE "A"

TYPE 1 INLET

NOT TO SCALE

NOTES

1. 1/2" CHAMFER TO BE USED ON ALL EXPOSED CORNERS ON INLETS. BARS TO BE INSTALLED 2" FROM FACE OF WALL.
2. INLET TO BE CONSTRUCTED OF STRUCTURAL P.C. CONCRETE. THE CONTRACT UNIT PRICE FOR INLET SHALL INCLUDE THE GRATE AND FRAME AS SPECIFIED.

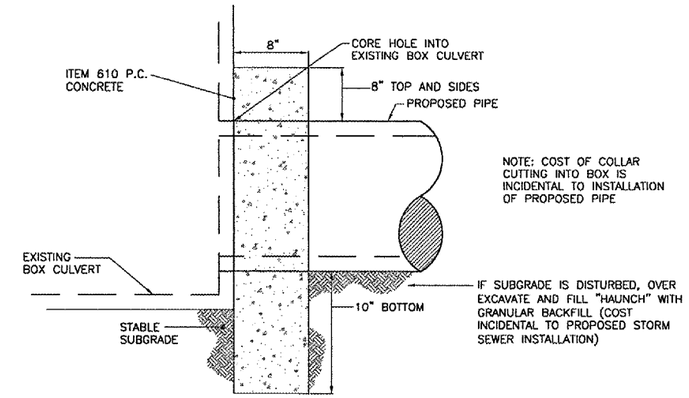

CONCRETE COLLAR - STORM SEWER

NOT TO SCALE

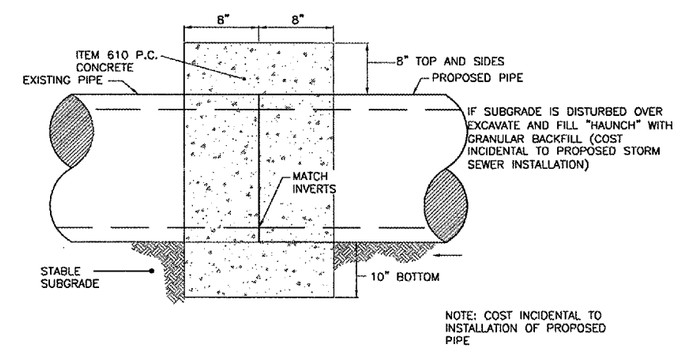

CONCRETE COLLAR - STORM SEWER

NOT TO SCALE

RO012

CMT
CRAWFORD, MURPHY & TILLY, INC.
CONSULTING ENGINEERS
© Copyright CMT, Inc.

Northwest Chicagoland International Airport

Rockford, Illinois

Greater Rockford Airport Authority

AIP: 3-17-0088-43
RFD-3487

Rehab. Txy B;
Rwy 1/19 RSA Impr.,
Falcon Rd. Reloc.
S. RIAT Rd. Constr.
E. RIAT Rd. Reloc.

Revisions

No.	Date	Description

0 1
THIS BAR IS EQUAL TO 1" AT FULL SCALE (17 X 11).

DESIGN BY:	CMT- ARR
DRAWN BY:	CMT- ARR
CHECKED BY:	CMT- ARR
APPROVED BY:	JGP
DATE:	7.29.2005
JOB No:	05258-04-00

DRAINAGE DETAILS (DDT1)

48