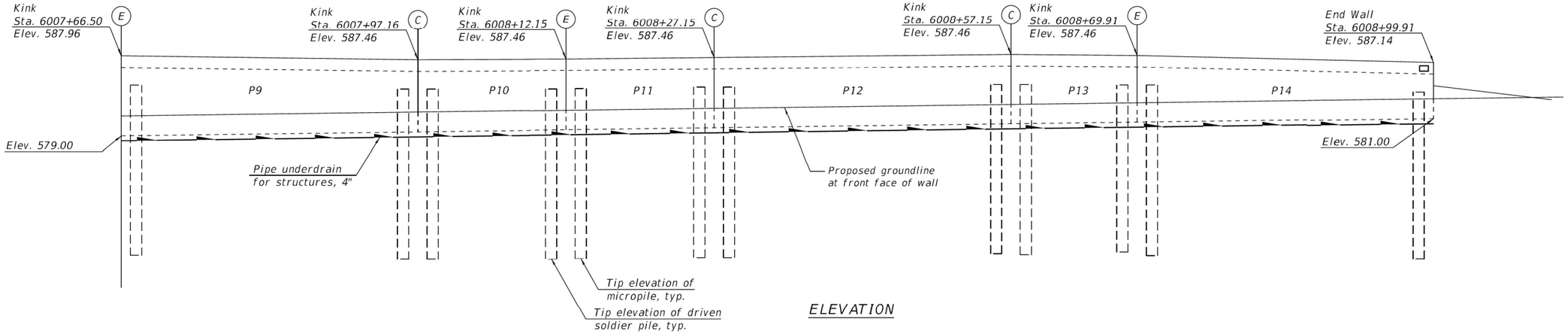

ELEVATION

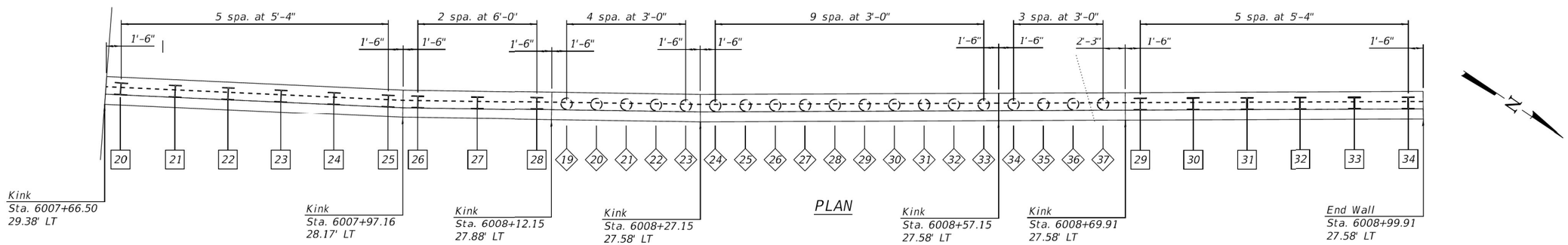

PLAN

MICROPILE SUMMARY TABLE 2 - SN 099-6302

Pile Number	Station at Centerline of Pile	Offset to Centerline of Pile, ft	Panel Number	Micropile Designation O.D. Casing, inches	Minimum Required Section, inches	Micropile Length, ft	Bottom Pile Tip Elevation, ft	Top Pile Elevation, ft	# of Stud Shear Connectors
19	6008+13.69	-29.48	11	11.875	55.29	28.00	556.46	584.46	24.00
20	6008+16.69	-29.42	11	11.875	55.29	28.00	556.46	584.46	24.00
21	6008+19.68	-29.36	11	11.875	55.29	28.00	556.46	584.46	24.00
22	6008+22.68	-29.30	11	11.875	55.29	28.00	556.46	584.46	24.00
23	6008+25.68	-29.25	11	11.875	55.29	28.00	556.46	584.46	24.00
24	6008+28.65	-29.22	12	11.875	55.29	28.00	556.46	584.46	24.00
25	6008+31.65	-29.21	12	11.875	55.29	28.00	556.46	584.46	24.00
26	6008+34.65	-29.21	12	11.875	55.29	28.00	556.46	584.46	24.00
27	6008+37.65	-29.21	12	11.875	55.29	28.00	556.46	584.46	24.00
28	6008+40.65	-29.21	12	11.875	55.29	28.00	556.46	584.46	24.00
29	6008+43.65	-29.21	12	11.875	55.29	28.00	556.46	584.46	24.00
30	6008+46.65	-29.21	12	11.875	55.29	28.00	556.46	584.46	24.00
31	6008+49.65	-29.21	12	11.875	55.29	28.00	556.46	584.46	24.00
32	6008+52.65	-29.21	12	11.875	55.29	28.00	556.46	584.46	24.00
33	6008+55.65	-29.21	12	11.875	55.29	28.00	556.46	584.46	24.00
34	6008+58.65	-29.21	13	11.875	55.29	27.00	557.96	584.96	20.00
35	6008+61.65	-29.21	13	11.875	55.29	27.00	557.96	584.96	20.00
36	6008+64.65	-29.21	13	11.875	55.29	27.00	557.96	584.96	20.00
37	6008+67.65	-29.21	13	11.875	55.29	27.00	557.96	584.96	20.00

Notes:
1. Pile 19 is Micropiles, Lateral Load Test.
2. Pile 20 is recommended location of Micropiles, Lateral Proof Load Test

DRIVEN SOLDIER PILE SUMMARY TABLE 2 - SN 099-6302

Pile Number	Station at Centerline of Pile	Offset to Centerline of Pile, ft	Panel Number	Driven Soldier Pile, HP Size	Minimum Required Section, inches3	Driven Soldier Pile Length, ft	Bottom Pile Tip Elevation, ft	Top Pile Elevation, ft	# of Stud Shear Connectors
20	6007+68.14	30.95	9	HP14x89	131.0	30.0	556.29	586.29	8
21	6007+73.76	30.79	9	HP14x89	131.0	30.0	556.29	586.29	8
22	6007+79.26	30.60	9	HP14x89	131.0	30.0	556.29	586.29	8
23	6007+84.76	30.37	9	HP14x89	131.0	30.0	556.29	586.29	8
24	6007+90.25	30.12	9	HP14x89	131.0	30.0	556.29	586.29	8
25	6007+95.71	29.85	9	HP14x89	131.0	30.0	556.29	586.29	8
26	6007+98.69	29.75	10	HP14x89	131.0	29.0	556.79	585.79	7
27	6008+04.69	29.64	10	HP14x89	131.0	29.0	556.79	585.79	7
28	6008+10.69	29.52	10	HP14x89	131.0	29.0	556.79	585.79	7
29	6008+71.41	29.19	14	HP14x89	131.0	28.0	558.04	586.04	7
30	6008+76.75	29.19	14	HP14x89	131.0	28.0	558.04	586.04	7
31	6008+82.16	29.19	14	HP14x89	131.0	28.0	558.04	586.04	7
32	6008+87.58	29.19	14	HP14x89	131.0	28.0	558.04	586.04	7
33	6008+93.00	29.19	14	HP14x89	131.0	28.0	558.04	586.04	7
34	6008+98.41	29.19	14	HP14x89	131.0	28.0	558.04	586.04	7

LEGEND

- X — Micropile Number
- X — Driven Soldier Pile Number
- Micropile
- Driven Soldier Pile
- Pipe Underdrain for Structures, 4"
- Gutter Flowline
- P# — Panel No.
- C — Construction Jt.
- E — ½" Expansion Jt.

Notes:
1. Pile spacings are measured perpendicular to the rear face of the concrete facing.
2. Stations and offsets shown in plan and elevation drawings are to front face of concrete facing.

STRAND ASSOCIATES®
1170 SOUTH HOUBOLT ROAD
JOLIET, ILLINOIS 60431
(815) 744-4200
IDFPR NO. 184-001273

USER NAME = AlexSc	DESIGNED - BRL	REVISED -	
	CHECKED - AJS	REVISED -	
PLOT SCALE =	DRAWN - BJF	REVISED -	
PLOT DATE = 7/9/2021	CHECKED - BRL	REVISED -	

STATE OF ILLINOIS
DEPARTMENT OF TRANSPORTATION

WALL PLAN AND ELEVATION - 2
STRUCTURE NO. 099-6302

SHEET NO. 5 OF 16 SHEETS

F.A.U. RTE.	SECTION	COUNTY	TOTAL SHEETS	SHEET NO.
325	16-00503-00-PV	WILL	782	608
		CONTRACT NO. 2584-1021		
		ILLINOIS FED. AID PROJECT		

TRANSYSTEMS

USER NAME = amkluver	DESIGNED -	REVISED -	
	CHECKED -	REVISED -	
PLOT SCALE = NTS	DRAWN -	REVISED -	
PLOT DATE = 6/23/2023	CHECKED -	REVISED -	

STATE OF ILLINOIS
DEPARTMENT OF TRANSPORTATION

EXISTING PLANS
STRUCTURE NO. 099-0301 & 099-0302

SHEET SE1-43 OF SE1-48 SHEETS

F.A.I. RTE.	SECTION	COUNTY	TOTAL SHEETS	SHEET NO.
I-80	FAI 80 21 STRUCTURE 6	WILL	898	601
		CONTRACT NO. 62R27		
		ILLINOIS FED. AID PROJECT		

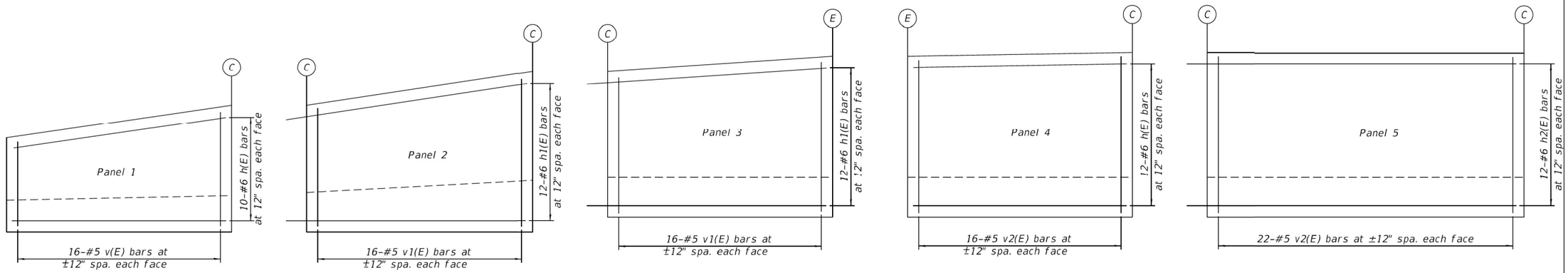

CONCRETE FACING PANEL ELEVATIONS

(Panels 1 to 5)

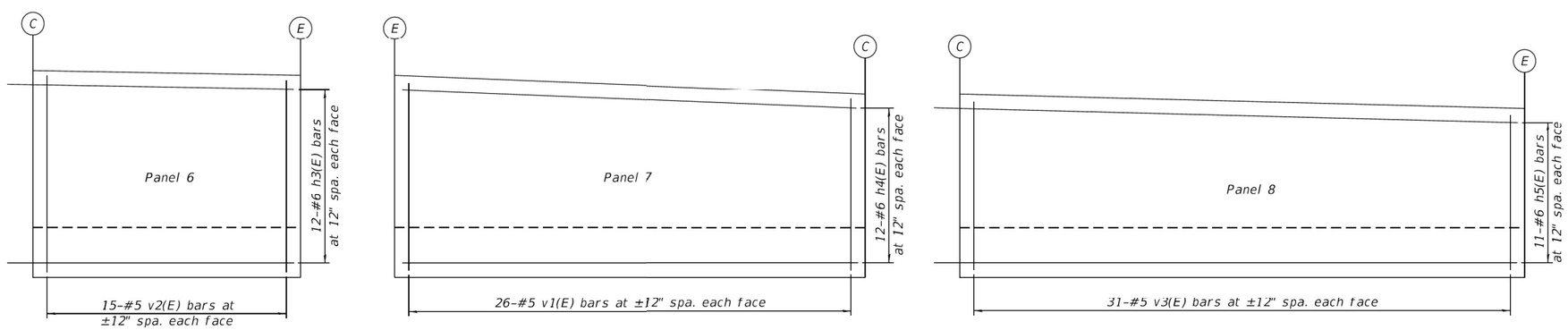

CONCRETE FACING PANEL ELEVATIONS

(Panels 6 to 8)

See wall and reinforcement detail notes on sheet 8 of 16.

CONCRETE PANEL FACING TABLE 1 - S.N. 099-6302				
Panel	W (FT)	X (FT)	Y (FT)	Z (FT)
1	8.46	2.18	15.00	6.28
2	10.71	2.25	15.00	8.46
3	10.71	1.00	15.00	9.71
4	10.96	0.25	15.00	10.71
5	10.96	0.00	21.13	10.96
6	10.96	0.25	14.19	10.71
7	10.71	1.00	25.00	9.71
8	9.71	0.75	30.00	8.96

1. See Panel Sketch-1 on this sheet for working panels 1 to 5.

2. See Panel Sketch-2 on Sheet 7 of 16 for working panels 6 to 8.

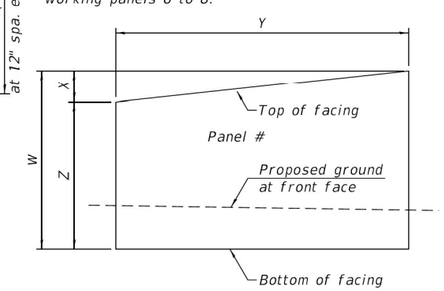

PANEL SKETCH - 1

LEGEND

Panel #

(C) Construction Joint

(E) ½" Expansion Joint

- - - - - Proposed groundline

MIN. BAR LAP

#6 bar = 3'-10"

FILE NAME = S:\JOL\44480--4\99\44780\001\Micro\CAD\Sheets\0010-XXX-XXX.7006-WALLDET1.dgn

STRAND ASSOCIATES® 1170 SOUTH HOUBOLT ROAD JOLIET, ILLINOIS 60431 (815) 744-4200 IDFPR NO. 184-001273	USER NAME = AlexSc	DESIGNED - BRL	REVISED -	STATE OF ILLINOIS DEPARTMENT OF TRANSPORTATION	WALL DETAILS - 1 STRUCTURE NO. 099-6302
		CHECKED - AJS	REVISED -		
	PLOT SCALE =	DRAWN - BJF	REVISED -		
	PLOT DATE = 7/9/2021	CHECKED - BRL	REVISED -		SHEET NO. 6 OF 16 SHEETS

F.A.U. RTE.	SECTION	COUNTY	TOTAL SHEETS	SHEET NO.
325	16-00503-00-PV	WILL	782	609
		CONTRACT NO. 2584-1021		
		ILLINOIS FED. AID PROJECT		

TRANSYSTEMS	USER NAME = amkluver	DESIGNED -	REVISED -	STATE OF ILLINOIS DEPARTMENT OF TRANSPORTATION	EXISTING PLANS STRUCTURE NO. 099-0301 & 099-0302
		CHECKED -	REVISED -		
	PLOT SCALE = NTS	DRAWN -	REVISED -		
	PLOT DATE = 6/23/2023	CHECKED -	REVISED -		SHEET SE1-44 OF SE1-48 SHEETS

F.A.I. RTE.	SECTION	COUNTY	TOTAL SHEETS	SHEET NO.
I-80	FAI 80 21 STRUCTURE 6	WILL	898	602
		CONTRACT NO. 62R27		
		ILLINOIS FED. AID PROJECT		

MODEL: Drawing Views
FILE NAME: pw://transystems-pw.bentley.com:transyscorp-pw1-hosted/Documents/Projects_2018/CH401/401180022/02-TranSystems/CAD/62R27/Sheets/23-Structural/099-0301 & 099-0302 Existing/0990301EX-62R27-001-Existing Plans 44.dgn

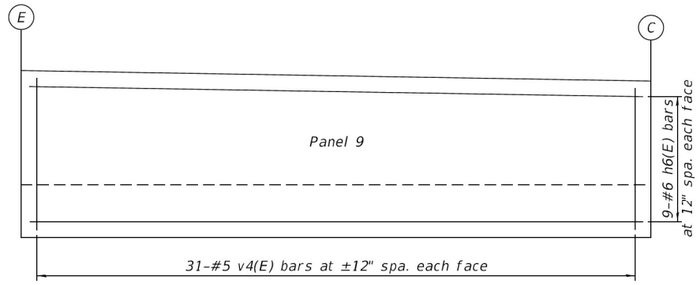

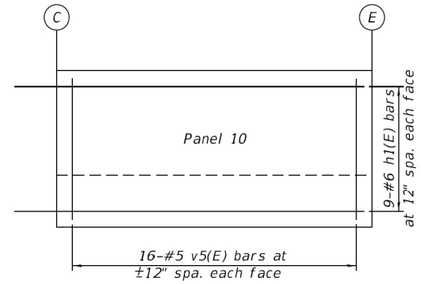

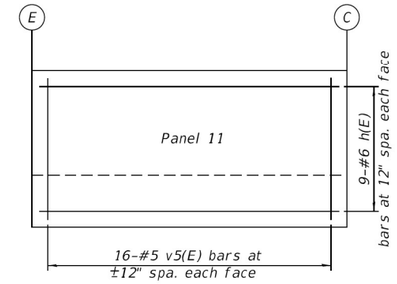

CONCRETE FACING PANEL ELEVATIONS

(Panels 9 to 11)

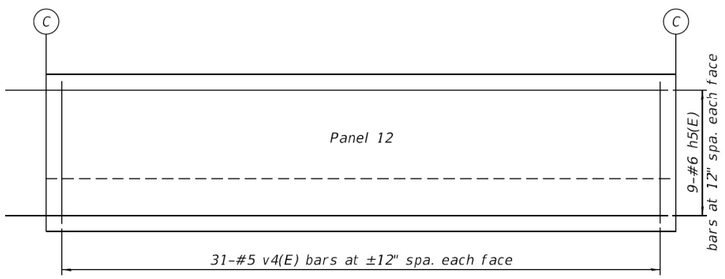

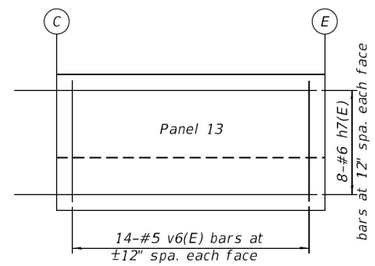

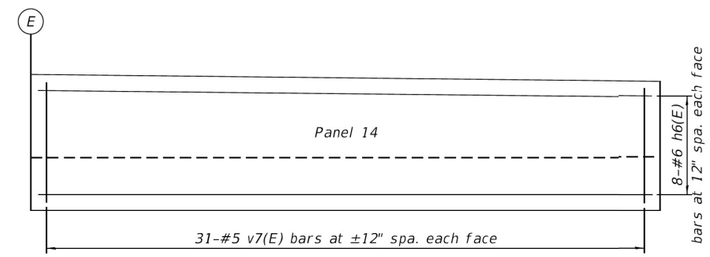

CONCRETE FACING PANEL ELEVATIONS

(Panels 12 to 14)

See wall and reinforcement detail notes on sheet 8 of 16.

CONCRETE PANEL FACING TABLE 2 - S.N. 099-6302				
Panel	W (FT)	X (FT)	Y (FT)	Z (FT)
9	7.96	0.50	30.00	7.46
10	7.46	0.00	15.00	7.46
11	7.46	0.00	15.00	7.46
12	7.46	0.00	30.00	7.46
13	6.46	0.00	12.75	6.46
14	6.46	0.32	30.00	6.14

1. See Panel Sketch-2 on this sheet for working panels 9 to 14.

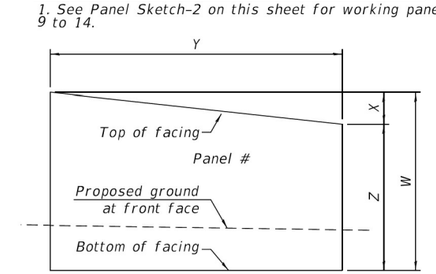

PANEL SKETCH - 2

LEGEND

Panel #

(C) Construction Joint

(E) ½" Expansion Joint

- - - - - Proposed groundline

MIN. BAR LAP

#6 bar = 3'-10"

FILE NAME = S:\JOL\4420--4499\4470\00\Macros\CAD_Sheets\0010-XXX-XXX_7007-4ALLDET2.dgn

STRAND ASSOCIATES® 1170 SOUTH HOUBOLT ROAD JOLIET, ILLINOIS 60431 (815) 744-4200 IDFPR NO. 184-001273	USER NAME = AlexSc	DESIGNED - BRL	REVISED -	STATE OF ILLINOIS DEPARTMENT OF TRANSPORTATION	WALL DETAILS - 2 STRUCTURE NO. 099-6302
		CHECKED - AJS	REVISED -		
	PLOT SCALE =	DRAWN - BJF	REVISED -		
	PLOT DATE = 7/9/2021	CHECKED - BRL	REVISED -		SHEET NO. 7 OF 16 SHEETS

F.A.U. RTE.	SECTION	COUNTY	TOTAL SHEETS	SHEET NO.
325	16-00503-00-PV	WILL	782	610
		CONTRACT NO. 2584-1021		
		ILLINOIS FED. AID PROJECT		

MODEL: Drawing Views
FILE NAME: pw://transystems-pw.bentley.com:transyscorp-pw1-hosted/Documents/Projects_2018/CH401/401180022/02-TranSystems/CAD/62R27/Sheets/23-Structural/099-0301 & 099-0302 Existing/0990301EX-62R27-001-Existing Plans 45.dgn

TRANSYSTEMS	USER NAME = amkluver	DESIGNED -	REVISED -	STATE OF ILLINOIS DEPARTMENT OF TRANSPORTATION	EXISTING PLANS STRUCTURE NO. 099-0301 & 099-0302
		CHECKED -	REVISED -		
	PLOT SCALE = NTS	DRAWN -	REVISED -		
	PLOT DATE = 6/23/2023	CHECKED -	REVISED -		SHEET SE1-45 OF SE1-48 SHEETS

F.A.I. RTE.	SECTION	COUNTY	TOTAL SHEETS	SHEET NO.
I-80	FAI 80 21 STRUCTURE 6	WILL	898	603
		CONTRACT NO. 62R27		
		ILLINOIS FED. AID PROJECT		

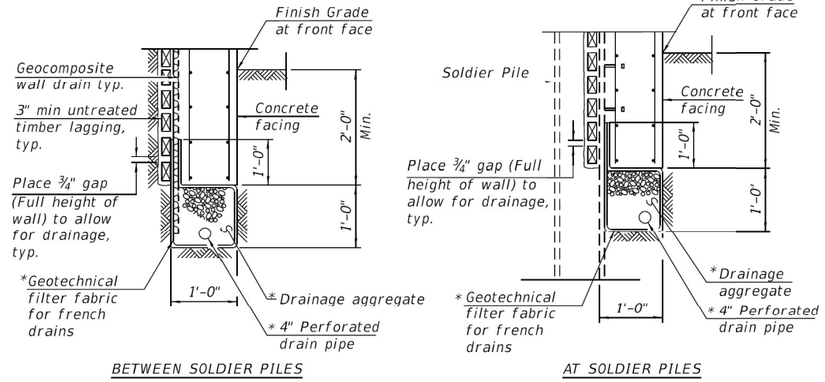

PIPE UNDERDRAIN DETAIL

*Included in the cost of Pipe Underdrains for Structures 4"

Pipe Underdrain shall tie into storm sewer. The pipe will outlet at approximately Sta. 6006+00.20 O/S 86.78' LT. Once the 4" perforated drain pipe exits the geotechnical filter fabric it shall be a solid 6" ∅ schedule 80 PVC pipe (minimum), included in cost of Pipe Underdrains for Structures 4".

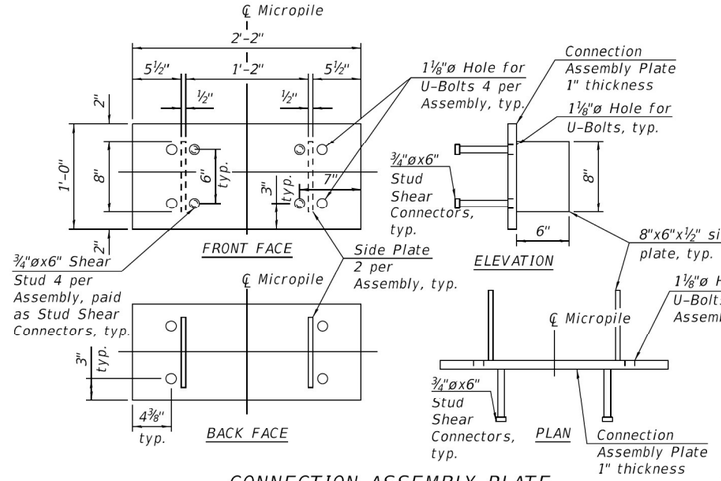

CONNECTION ASSEMBLY PLATE

(1 Assembly; Total Assemblies 262)

Note: Connection Assembly Plate, or submitted equal by shop drawings, to provide connection between Micropile and Stud Shear Connectors embeded into Concrete Facing. Timber lagging rests on the back face of the plate at Micropile locations. Connection Assembly Plates should be stacked to provide continuous timber lagging support.

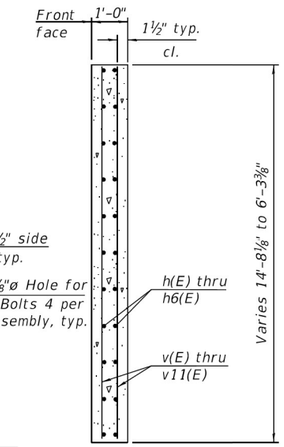

SECTION THRU CONCRETE PANEL FACING

NOTES

1. Stations and dimensions are at front face of wall.
2. Space reinforcement in wall to miss shear studs.
3. For Typical Section, see Sheet 2 of 16 and this sheet.
4. Vertical bars are cut to fit.
5. Horizontal top bars along the slope are to be fanned.
6. Front face of concrete facing to be cast vertical.
7. Connection Assembly Plate – 262 Total Assemblies (Paid under Furnishing and Erecting Structural Steel. See General Note 1.):
   1 – 2'-2"x1'-0"x1" Plate
   2 – 6"x8"x½" Side Plates
   4 – 1⅛" Dia. Holes
   4 – Stud Shear Connectors (Paid seperately as Stud Shear Connectors)
8. Connection Assembly UBolts – 262 Total Assemblies (Paid under Furnishing and Erecting Structural Steel. See General Note 1.):
   2 – Ubolts 1" Dia. or sized to fit Micropile
   4 – Heavy Hex Nuts

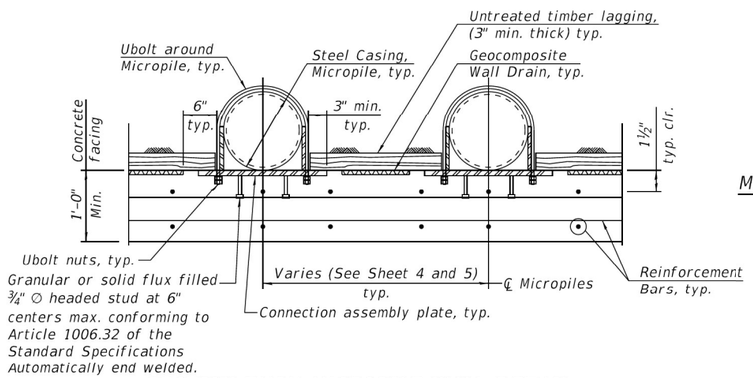

SECTION THRU MICROPILE WALL DETAIL

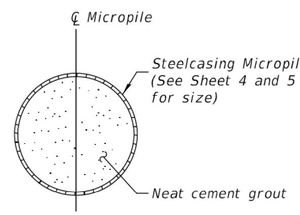

MICROPILE SECTION

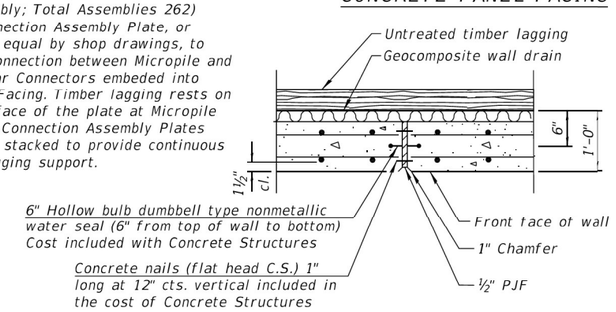

EXPANSION JOINT DETAIL

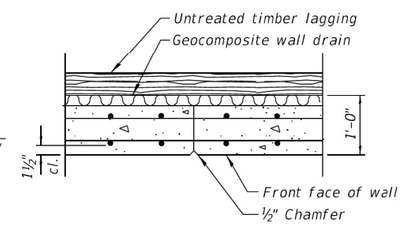

CONSTRUCTION JOINT DETAIL

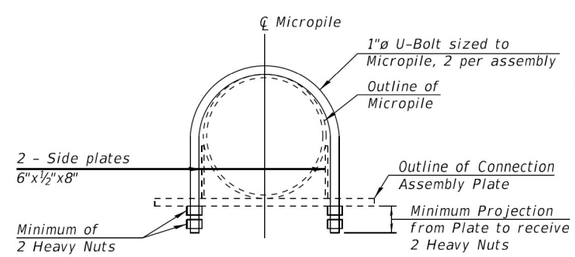

CONNECTION ASSEMBLY U-BOLTS

(1 Assembly; Total Assemblies 262)

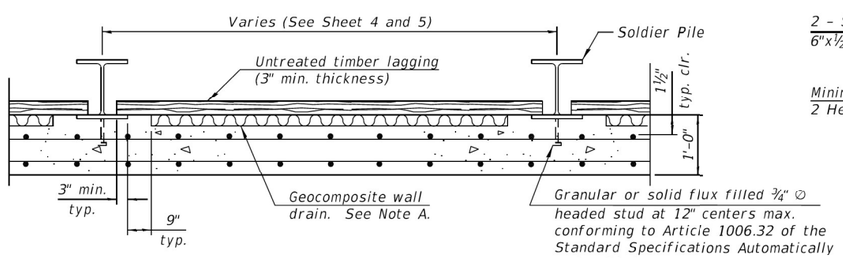

SECTION THRU DRILLED SOLDIER PILE WALL

Note A: Geocomposite wall drain shall not have a thickness greater than 13/16"

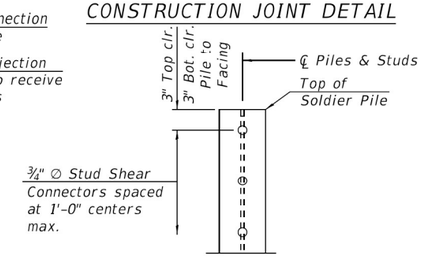

SHEAR STUD PLACEMENT

MICROPILE WALL AND DRIVEN SOLDIER PILE WALL BILL OF MATERIAL

Bar	No.	Size	Length	Shape
h(E)	31	#6	14'-8"	
h1(E)	33	#6	18'-10"	
h2(E)	12	#6	20'-10"	
h3(E)	12	#6	13'-10"	
h4(E)	12	#6	24'-8"	
h5(E)	20	#6	33'-10"	
h6(E)	17	#6	29'-8"	
h7(E)	8	#6	16'-7"	
v(E)	16	#5	8'-2"	
v1(E)	58	#5	10'-5"	
v2(E)	53	#5	10'-8"	
v3(E)	31	#5	9'-5"	
v4(E)	62	#5	7'-8"	
v5(E)	32	#5	7'-2"	
v6(E)	14	#5	6'-8"	
v7(E)	31	#5	6'-5"	

Concrete Structures	Cu Yd	133
Furnishing and Erecting Structural Steel	Pound	33,120
Stud Shear Connectors	Each	1,359
Reinforcement Bars, Epoxy Coated	Pound	7,510
Furnishing Soldier Piles (HP Section)	Foot	1,053
Driving Soldier Piles	Foot	1,053
Untreated Timber Lagging	Sq Ft	2,193
Concrete Sealer	Sq Ft	3,427
Geocomposite Wall Drain	Sq Yd	230
Micropiles – Wall	Each	37
Pipe Underdrains for Structure 4"	Foot	330

FILE NAME = S:\JOL\4408-4495\4470\001\Micros\CAD_Sheets\0010-XXX-XXXX_7008-WALLDETL.dgn

STRAND ASSOCIATES® 1170 SOUTH HOUBOLT ROAD JOLIET, ILLINOIS 60431 (815) 744-4200 IDFPR NO. 184-001273

USER NAME = AlexSc	DESIGNED - BRL	REVISED -	
	CHECKED - AJS	REVISED -	
PLOT SCALE =	DRAWN - BJF	REVISED -	
PLOT DATE = 7/9/2021	CHECKED - BRL	REVISED -	

STATE OF ILLINOIS
DEPARTMENT OF TRANSPORTATION

WALL DETAILS – 3
STRUCTURE NO. 099–6302

SHEET NO. 8 OF 16 SHEETS

F.A.U. RTE.	SECTION	COUNTY	TOTAL SHEETS	SHEET NO.
325	16-00503-00-PV	WILL	782	611
		CONTRACT NO. 2584-1021		
		ILLINOIS FED. AID PROJECT		

MODEL: Drawing Views
FILE NAME: pw://transystems-pw.bentley.com:transyscorp-pw1-hosted/Documents/Projects_2018/CH401/401180022/02-TranSystems/CAD/62R27/Sheets/23-Structural/099-0301 & 099-0302 Existing/0990301EX-62R27-001-Existing Plans 46.dgn

TRANSYSTEMS

USER NAME = amkluver	DESIGNED -	REVISED -	
	CHECKED -	REVISED -	
PLOT SCALE = NTS	DRAWN -	REVISED -	
PLOT DATE = 6/23/2023	CHECKED -	REVISED -	

STATE OF ILLINOIS
DEPARTMENT OF TRANSPORTATION

EXISTING PLANS
STRUCTURE NO. 099-0301 & 099-0302

SHEET SE1-46 OF SE1-48 SHEETS

F.A.I. RTE.	SECTION	COUNTY	TOTAL SHEETS	SHEET NO.
I-80	FAI 80 21 STRUCTURE 6	WILL	898	604
		CONTRACT NO. 62R27		
		ILLINOIS FED. AID PROJECT		

Interra, Inc.
600 Territorial Drive, Suite G
Bolingbrook, IL 60440
www.interraservices.com

SOIL BORING LOG

Page 1 of 1

Date 11/20/17

ROUTE Houbolt Road DESCRIPTION Slope Wall Boring LOGGED BY Eric Slusser

SECTION _____ LOCATION I-80 & Houbolt Interchange

COUNTY Will County DRILLING METHOD Hollow Stem Auger HAMMER TYPE Automatic

STRUCT. NO. _____
Station _____

BORING NO. SW-01
Station 5008+92
Offset 6.00ft RT
Ground Surface Elev. 584.00 ft

Surface Water Elev. _____ ft
Stream Bed Elev. _____ ft

Groundwater Elev.:
First Encounter 577.0 ft
Upon Completion 577.0 ft
After _____ Hrs. _____ ft

Description	Elev.	DEPTH (ft)	BLOWS (/6")	UCS Qu (tsf)	MOIST (%)
12" ASPHALT	583.00				
Medium dense to dense, Light Gray (10YR 7/1) CRUSHED ROCK AGGREGATE, mixed with sand, moist			15		
			6		
			4		
			4		
			2		
		-5	34		
Dense to very dense, brown (10YR 5/3) SANDY LOAM little medium to fine gravel saturated at 7.0 feet	578.50		12		
			26		7.8
			32		
			19		
			50		5.1
		-10			
very dense to medium dense, pale brown (10YR 6/3) SAND little fine gravel saturated	573.50		33		
			40		4.4
			30		
			7		
			8		8.0
	569.00	-15	10		
		-20			

The Unconfined Compressive Strength (UCS) Failure Mode is indicated by (B-Bulge, S-Shear, P-Penetrometer)

BBS, from 137 (Rev. 8-99)

Interra, Inc.
600 Territorial Drive, Suite G
Bolingbrook, IL 60440
www.interraservices.com

SOIL BORING LOG

Page 1 of 1

Date 11/20/17

ROUTE Houbolt Road DESCRIPTION Slope Wall Boring LOGGED BY Eric Slusser

SECTION _____ LOCATION I-80 & Houbolt Interchange

COUNTY Will County DRILLING METHOD Hollow Stem Auger HAMMER TYPE Automatic

STRUCT. NO. _____
Station _____

BORING NO. SW-02
Station 5007+25
Offset 14.00ft LT
Ground Surface Elev. 582.94 ft

Surface Water Elev. _____ ft
Stream Bed Elev. _____ ft

Groundwater Elev.:
First Encounter 569.4 ft
Upon Completion 569.4 ft
After _____ Hrs. _____ ft

Description	Elev.	DEPTH (ft)	BLOWS (/6")	UCS Qu (tsf)	MOIST (%)
11" ASPHALT	582.02				
Loose to very loose, light gray (10YR 7/1) SAND FILL some crushed rock aggregate moist			14		
			5		1.9
			4		
			2		
			2		2.4
		-5	2		
Dense, Brown (10YR 5/3) SANDY LOAM FILL little fine gravel, crushed rock aggregate moist	577.44		8		
			19		4.6
			20		
Very dense to medium dense, brown (10YR 5/3) SAND little medium to fine gravel saturated at 13.5 feet	574.94		14		
			32		4.8
		-10	35		
			24		
			14		5.8
			12		
			5		
			12		12.2
		-15	12		
Very dense, light gray (10YR 7/1) SILTY LOAM trace fine gravel wet	567.44		17		
			40		9.9
			49		
			29		
			36		8.3
		-20	29		
Very dense, light gray (10YR 7/1) SANDY LOAM little large gravel saturated	562.44		31		
			50		9.8
WEATHERED BEDROCK	559.94		50		
					10.3
		-25			
Light gray (10YR 7/1) and dark gray (10YR 3/1) DOLOMITIC LIMESTONE Hard, weathered throughout the run RQD=45.2%, poor rock quality	554.94				
		-30			
		-35			
	544.94				
		-40			

The Unconfined Compressive Strength (UCS) Failure Mode is indicated by (B-Bulge, S-Shear, P-Penetrometer)

BBS, from 137 (Rev. 8-99)

FILE NAME = SA:JOL\14480--4:99\4470\001\Micros\CAD_Sheets\0010-XXX-XXXX_7812-SBL.dgn

STRAND ASSOCIATES	USER NAME = AlexSc	DESIGNED - BRL	REVISED -	STATE OF ILLINOIS DEPARTMENT OF TRANSPORTATION	SOIL BORING LOGS – 1 STRUCTURE NO. 099–6302	F.A.U. RTE. 325	SECTION 16-00503-00-PV	COUNTY WILL	TOTAL SHEETS 782	SHEET NO. 612
1170 SOUTH HOUBOLT ROAD JOLIET, ILLINOIS 60431 (815) 744-4200 IDFPR NO. 184-001273		CHECKED - AJS	REVISED -					CONTRACT NO. 2584-1021		
	PLOT SCALE =	DRAWN - BJF	REVISED -					ILLINOIS FED. AID PROJECT		
	PLOT DATE = 7/9/2021	CHECKED - BRL	REVISED -		SHEET NO. 9 OF 16 SHEETS					

TRANSYSTEMS	USER NAME = amkluver	DESIGNED -	REVISED -	STATE OF ILLINOIS DEPARTMENT OF TRANSPORTATION	EXISTING PLANS STRUCTURE NO. 099-0301 & 099-0302	F.A.I. RTE. I-80	SECTION FAI 80 21 STRUCTURE 6	COUNTY WILL	TOTAL SHEETS 898	SHEET NO. 605
		CHECKED -	REVISED -					CONTRACT NO. 62R27		
	PLOT SCALE = NTS	DRAWN -	REVISED -					ILLINOIS FED. AID PROJECT		
	PLOT DATE = 6/23/2023	CHECKED -	REVISED -		SHEET SE1-47 OF SE1-48 SHEETS					

MODEL: Drawing Views
FILE NAME: pw://transystems-pw.bentley.com:transyscorp-pw1-hosted/Documents/Projects_2018/CH401/401180022/02-TranSystems/CAD/62R27/Sheets/23-Structural/099-0301 & 099-0302 Existing/0990301EX-62R27-001-Existing Plans 47.dgn

Illinois Department of Transportation
Division of Highways
Interra, Inc.

ROCK CORE LOG

Page 1 of 1

Date 11/20/17

ROUTE Houbolt Road DESCRIPTION Slope Wall Boring LOGGED BY Eric Slusser

SECTION _____ LOCATION I-80 & Houbolt Interchange

COUNTY Will County CORING METHOD NQ Conventional

STRUCT. NO. _____
Station _____

BORING NO. SW-02
Station _____
Offset _____
Ground Surface Elev. 582.94 ft

CORING BARREL TYPE & SIZE NC
Core Diameter 1.8 in
Top of Rock Elev. 554.94 ft
Begin Core Elev. 554.94 ft

	DEPTH (ft)	CORE (#)	RECOVERY (%)	R.Q.D. (%)	CORE TIME (min/ft)	STRENGTH (tsf)
Light gray (10YR 7/1) and dark gray (10YR 3/1) DOLOMITIC LIMESTONE 554.94 Hard, weathered throughout the run RQD=45.2%, poor rock quality	-30 -35	1	100	45	11	
544.94 End of Boring	-40 -45					

Color pictures of the cores _____
Cores will be stored for examination until 2021
The "Strength" column represents the uniaxial compressive strength of the core sample (ASTM D-2938)

BBS, form 138 (Rev. 8-99)

Interra, Inc.
600 Territorial Drive, Suite G
Bolingbrook, IL 60440
www.interraservices.com

SOIL BORING LOG

Page 1 of 1

Date 11/20/17

ROUTE Houbolt Road DESCRIPTION Slope Wall Boring LOGGED BY Eric Slusser

SECTION _____ LOCATION I-80 & Houbolt Interchange

COUNTY Will County DRILLING METHOD Hollow Stem Auger HAMMER TYPE Automatic

STRUCT. NO. _____
Station _____

BORING NO. SW-04
Station 6007+10
Offset 6.00ft LT
Ground Surface Elev. 582.56 ft

Surface Water Elev. _____ ft
Stream Bed Elev. _____ ft

Groundwater Elev.:
First Encounter 568.6 ft ▼
Upon Completion 568.6 ft ▽
After ____ Hrs. _____ ft

	DEPTH (ft)	BLOWS (/6")	UCS Qu (tsf)	MOIST (%)
12" ASPHALT 581.56				
Very dense, brown (10YR 5/3) SAND FILL little crushed rock aggregate & fine gravel moist 579.56		22 42 37		4.4
Medium dense to very dense, pale brown (10YR 6/3) SAND trace to little fine gravel moist	-5	13 13 13 18		4.1
	-10	31 32 15 32 32 12		3.8 3.5
569.56		14 9		4.5
Dense, pale brown (10YR 6/3) SANDY LOAM little medium to fine gravel saturated at 14.0 feet 567.56	-15	6 17 18		12.1
	-20			

The Unconfined Compressive Strength (UCS) Failure Mode is indicated by (B-Bulge, S-Shear, P-Penetrometer)

BBS, from 137 (Rev. 8-99)

FILE NAME = S:\JOL\4400--49\4470\001\Micro\CAD_Sheets\0010-XXX-XXXX_7013-RCL1.dgn

STRAND ASSOCIATES®
1170 SOUTH HOUBOLT ROAD
JOLIET, ILLINOIS 60431
(815) 744-4200
IDFPR NO. 184-001273

USER NAME = AlexSc	DESIGNED - BRL	REVISED -
	CHECKED - AJS	REVISED -
PLOT SCALE =	DRAWN - BJF	REVISED -
PLOT DATE = 7/9/2021	CHECKED - BRL	REVISED -

STATE OF ILLINOIS
DEPARTMENT OF TRANSPORTATION

SOIL BORING LOGS – 2
STRUCTURE NO. 099–6302
SHEET NO. 10 OF 16 SHEETS

F.A.U. RTE.	SECTION	COUNTY	TOTAL SHEETS	SHEET NO.
325	16-00503-00-PV	WILL	782	613
		CONTRACT NO. 2584-1021		
		ILLINOIS FED. AID PROJECT		

MODEL: Drawing Views
FILE NAME: pw://transystems-pw.bentley.com:transyscorp-pw1-hosted/Documents/Projects_2018/CH401/401180022/02-TranSystems/CAD/62R27/Sheets/23-Structural/099-0301 & 099-0302 Existing/0990301EX-62R27-001-Existing Plans 48.dgn

TRANSYSTEMS

USER NAME = amkluver	DESIGNED -	REVISED -
	CHECKED -	REVISED -
PLOT SCALE = NTS	DRAWN -	REVISED -
PLOT DATE = 6/23/2023	CHECKED -	REVISED -

STATE OF ILLINOIS
DEPARTMENT OF TRANSPORTATION

EXISTING PLANS
STRUCTURE NO. 099-0301 & 099-0302
SHEET SE1-48 OF SE1-48 SHEETS

F.A.I. RTE.	SECTION	COUNTY	TOTAL SHEETS	SHEET NO.
I-80	FAI 80 21 STRUCTURE 6	WILL	898	606
		CONTRACT NO. 62R27		
		ILLINOIS FED. AID PROJECT		

Benchmark: "X" in Mag Nail north side of WB I-80. ± 80' east of existing structure. Elev. 596.22

Existing Structure: The existing structure is a (6' x 3') single reinforced concrete box culvert that carries I-80 over unnamed tributary at station 494+81.88.

Traffic Control: Traffic to be maintained along I-80 using staged construction. The road shall remain open to at least two lanes of traffic in each direction at all times.

No Salvage.

WATERWAY INFORMATION

Drainage Area = 0.5 sq. mi.					Low Grade Elev. = 595.46 at Sta. 494+80				
Flood	Freq. Yr.	Q C.F.S.	Opening Sq. Ft. Exist.	Opening Sq. Ft. Prop.	Nat. H.W.E.	Head - Ft. Exist.	Head - Ft. Prop.	Headwater El. Exist.	Headwater El. Prop.
Ten-YR	10	131.20	2	81	587.97	4.10	1.47	592.07	589.44
Design	50	265.50	5	81	588.48	8.63	1.92	597.11	590.40
Base	100	348.80	6	81	588.70	8.57	2.20	597.27	590.90
Overtopping									
Max. Calc.	500	499.10	8	81	589.05	8.43	3.54	597.48	592.59

10 year velocity through existing structure = 8.9 ft/s
10 year velocity through proposed structure = 5.3 ft/s

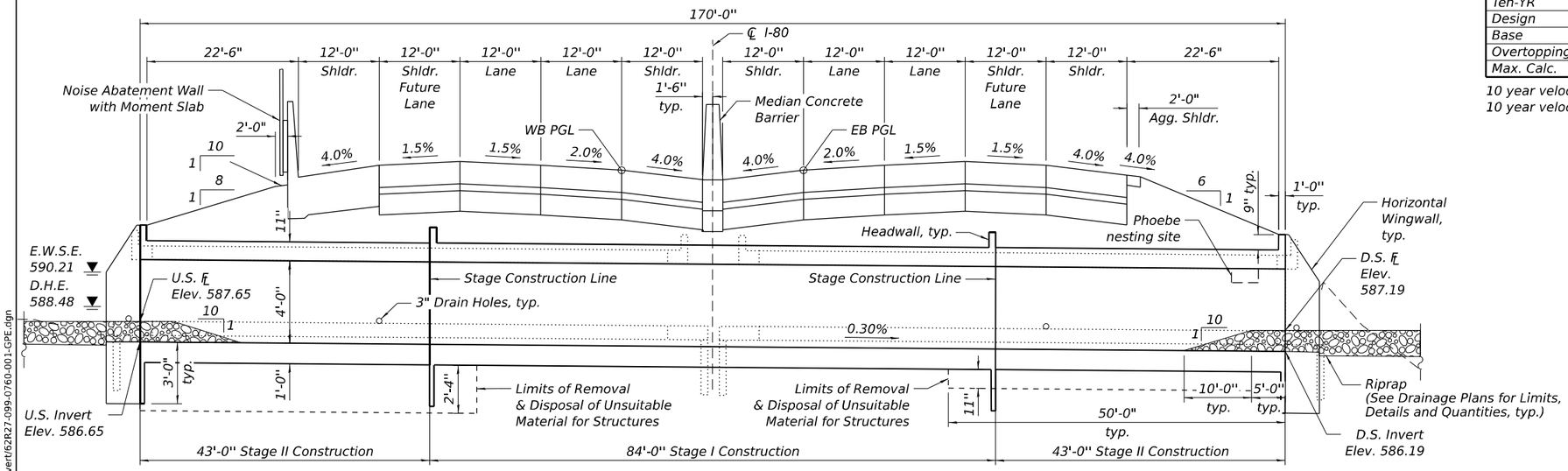

LONGITUDINAL SECTION

(at ℄ of Culvert)

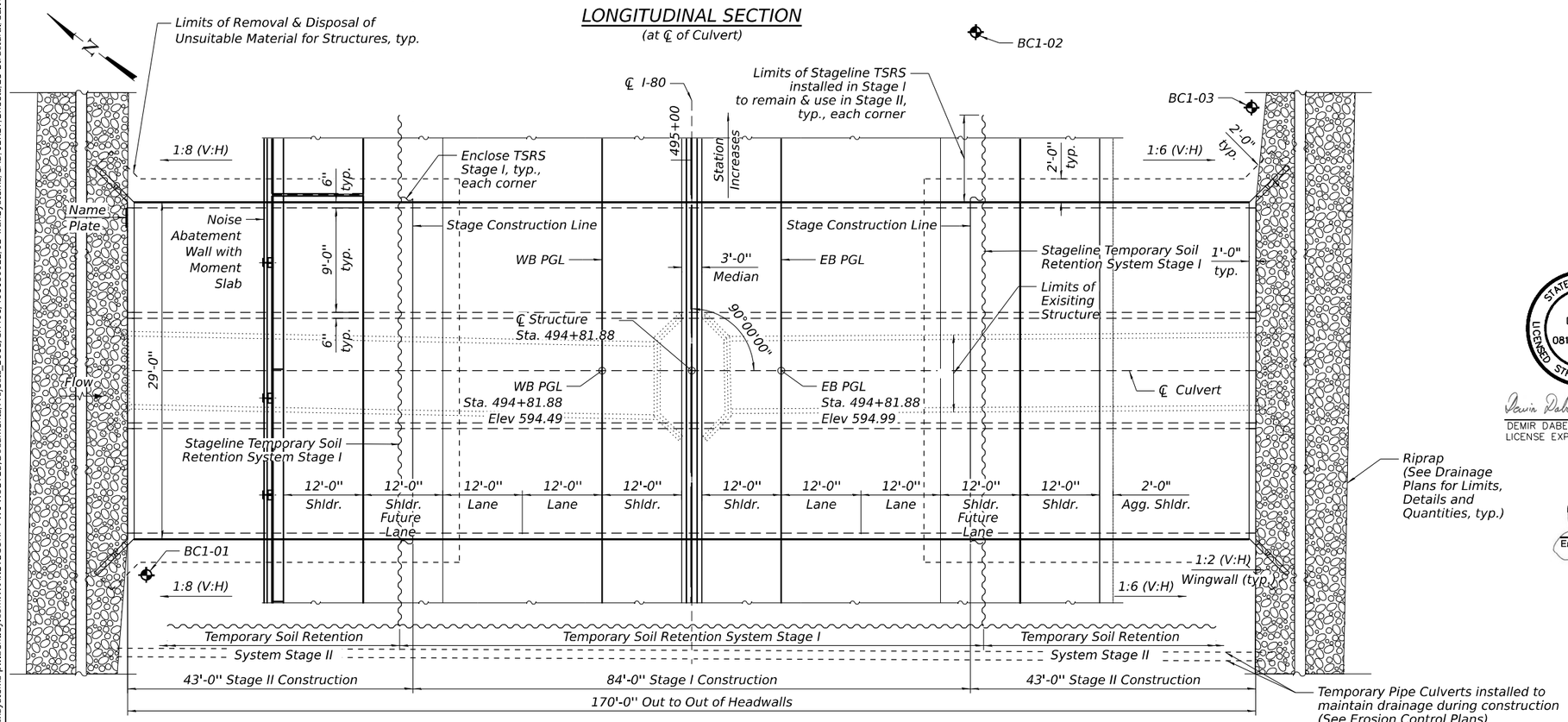

PLAN

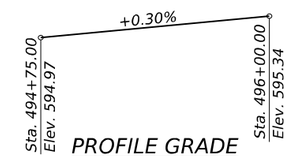

PROFILE GRADE

Along EB & WB PGL

DESIGN SPECIFICATIONS

2020 AASHTO LRFD Bridge Design Specifcations, 9th Edition

LOADING HL-93

Allow 50#/sq. ft. for future wearing surface.

DESIGN STRESSES

FIELD UNITS

f'c = 3,500 psi
fy = 60,000 psi (Reinforcement)

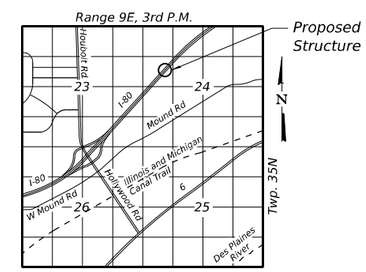

LOCATION SKETCH

STATE OF ILLINOIS
DEMIR DABEZIC
081-007749
LICENSED STRUCTURAL ENGINEER

08/14/2023
DEMIR DABEZIC DATE
LICENSE EXPIRES: 11/30/2024

APPROVED
For Structural Adequacy Only
Engineer of Bridges & Structures

GENERAL PLAN AND ELEVATION
IL RTE. I-80 OVER UNNAMED TRIBUTARY
F.A.I. RTE. 80 - SEC. F.A.I. 80 21 STRUCTURE 6
WILL COUNTY
STATION 494+81.88
S.N. 099-0760

AECOM
303 EAST WACKER DRIVE, SUITE 1400
CHICAGO, IL 60601-5276
PHONE: (312) 373-7700 FAX: (312) 373-6800

USER NAME =	DESIGNED - JA	REVISED -	
	CHECKED - DD	REVISED -	
PLOT SCALE =	DRAWN - JA	REVISED -	
PLOT DATE =	CHECKED - DD	REVISED -	

STATE OF ILLINOIS
DEPARTMENT OF TRANSPORTATION

SHEET S2-1 OF S2-10 SHEETS

F.A.I. RTE.	SECTION	COUNTY	TOTAL SHEETS	SHEET NO.
I-80	FAI 80 21 STRUCTURE 6	WILL	898	607

CONTRACT NO. 62R27

ILLINOIS | FED. AID PROJECT

GENERAL NOTES

1. This box culvert has a fill height of 3.0 feet.
2. Undercut shall be paid for at the contract unit per cubic yard as Removal and Disposal of Unsuitable Material for Structures. CA-6 bedding stone will be paid for at the contract unit price per cubic yard as Granular Backfill for Structures. The limits and quantities of removal and replacement shown are based on the boring data and may be modified by the District Geotechnical and Field Engineers for variable subsurface conditions encountered in the field.
3. Drain holes shall conform to the requirements of Article 503.11 of the Standard Specifications. Cost shall be included in Concrete Box Culverts.
4. All exposed edges shall have ¾" chamfer.
5. Removal of existing culverts shall include any headwalls, wingwalls, or aprons attached to the culvert. Excavation of earth necessary to perform removal of existing structures will not be measured for payment.
6. Geocomposite Wall Drain shall be according to Section 591 of the Standard Specifications, except that concrete nails shall not be used in areas where it overlaps Membrane Waterproofing System for Buried Structures.
7. Geotechnical Fabric for Ground Stabilization shall extend of both side edges, along the vertical face, and overlap 12in. or greater in the direction of the turn in the locations where Bedding Material is placed.

INDEX OF SHEETS

S2-1	General Plan & Elevation
S2-2	General Data
S2-3	Temporary Soil Retention System
S2-4 - S2-5	Staging & Details
S2-6 - S2-8	Culvert Details
S2-9	Bar Splicer Assembly and Mechanical Splicer Details
S2-10	Soil Boring Logs

TOTAL BILL OF MATERIAL

ITEM	UNIT	TOTAL
Porous Granular Embankment	Cu. Yd.	352.6
Geotechnical Fabric For Ground Stabilization	Sq. Yd.	491
Removal of Existing Structures	Each	1
Structure Excavation	Cu. Yd.	2,646.0
Removal and Disposal of Unsuitable Material for Structures	Cu. Yd.	202.8
Reinforcement Bars	Pound	103,010
Bar Splicers	Each	296
Name Plates	Each	1
Temporary Soil Retention System	Sq. Ft.	3,066
Concrete Box Culverts	Cu. Yd.	414.9
Granular Backfill for Structures	Cu. Yd.	202.8
Geocomposite Wall Drain	Sq. Yd.	624
Membrane Waterproofing System for Buried Structures	Sq. Yd.	624

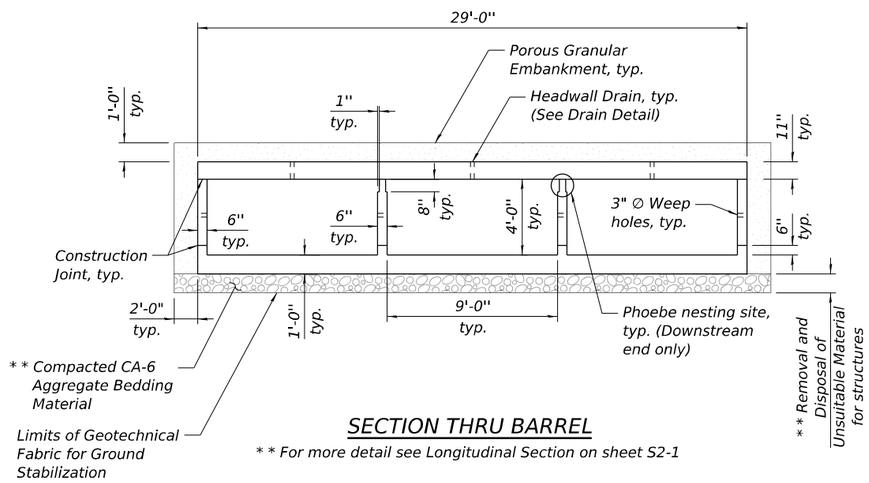

SECTION THRU BARREL

* * For more detail see Longitudinal Section on sheet S2-1

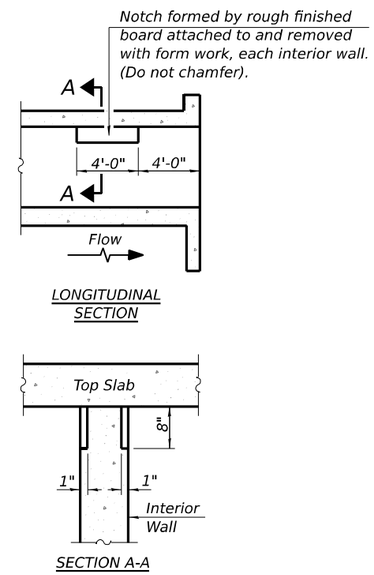

PHOEBE NESTING SITE DETAILS

(Downstream End Only)

* Nonwoven geotextile fabric shall conform to the requirements of Article 1080.01 of the Standard Specifications. The minimum weight of the fabric shall be 6 ounces per square yard.

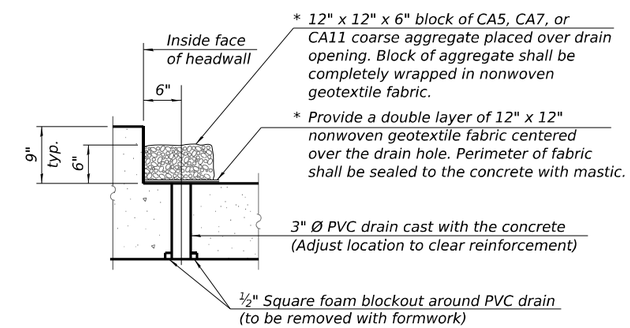

DRAIN DETAIL

(All costs associated with furnishing and constructing the above drain detail will not be measured for payment but shall be included in the contract unit price for the associated work.)

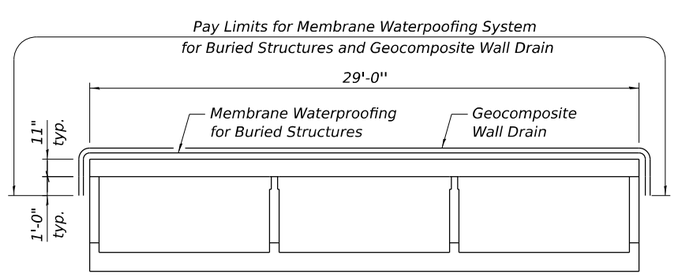

MEMBRANE WATERPROOFING DETAIL

STATION 494+81.88
BUILT 202_ BY
STATE OF ILLINOIS
F.A.I. RTE. 80
SEC. F.A.I. 80 21 STRUCTURE 6
LOADING HL-93
STRUCTURE NO. 099-0760

NAME PLATE

See Std. 515001

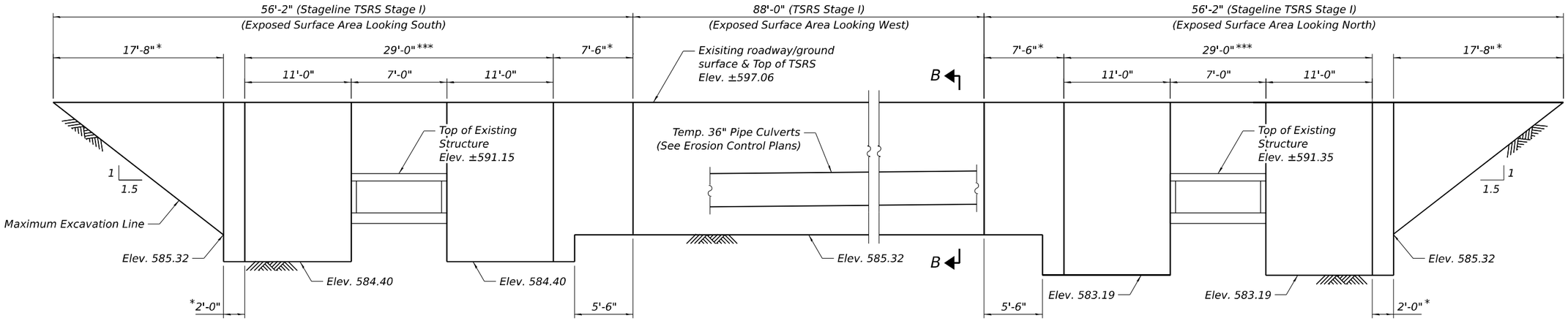

TEMPORARY SOIL RETENTION SYSTEM SKETCH - STAGE I

(Unfolded View)

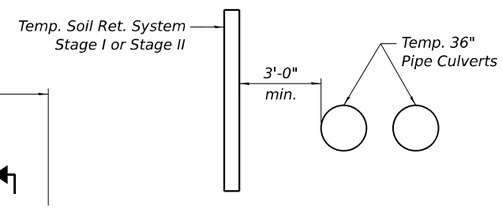

SECTION B-B

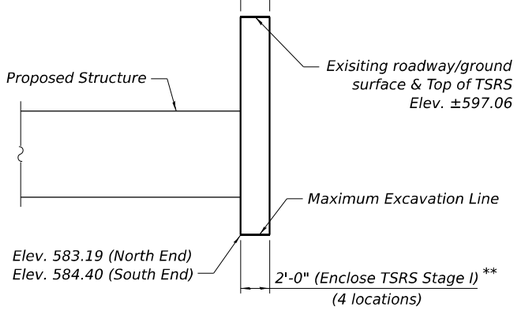

SECTION A-A

(Typical at each corner of proposed structure constructed during Stage I)

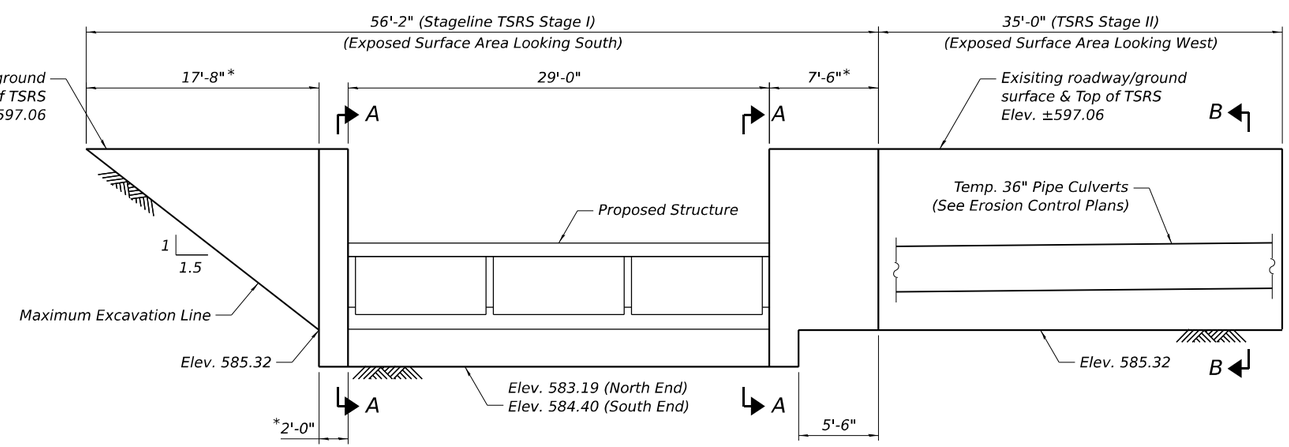

TEMPORARY SOIL RETENTION SYSTEM SKETCH - STAGE II

(Unfolded View - Enclose TSRS Stage I not shown for clarity)
North End Shown - South End Similar

NOTES

Limits of Temporary Soil Retention System (TSRS) shown are approximate and quantities provided are estimated. Contractor shall verify exact TSRS limits required.

A cantilevered sheet piling design does not appear feasible and additional members or other retention systems may be necessary. The contractor shall submit a temporary soil retention system design including plan details and calculations for review and acceptance by the Engineer.

* Stageline TSRS Stage I to be left in place for Stage II Removal and Construction.

** Install Enclose TSRS Stage I after completion of Stage I Construction of proposed structure and prior to Stage I backfill. Install parallel to the wall of the proposed structure.

*** Stageline TSRS Stage I to be removed prior to Stage II Construction.

LEGEND

Denotes Removal

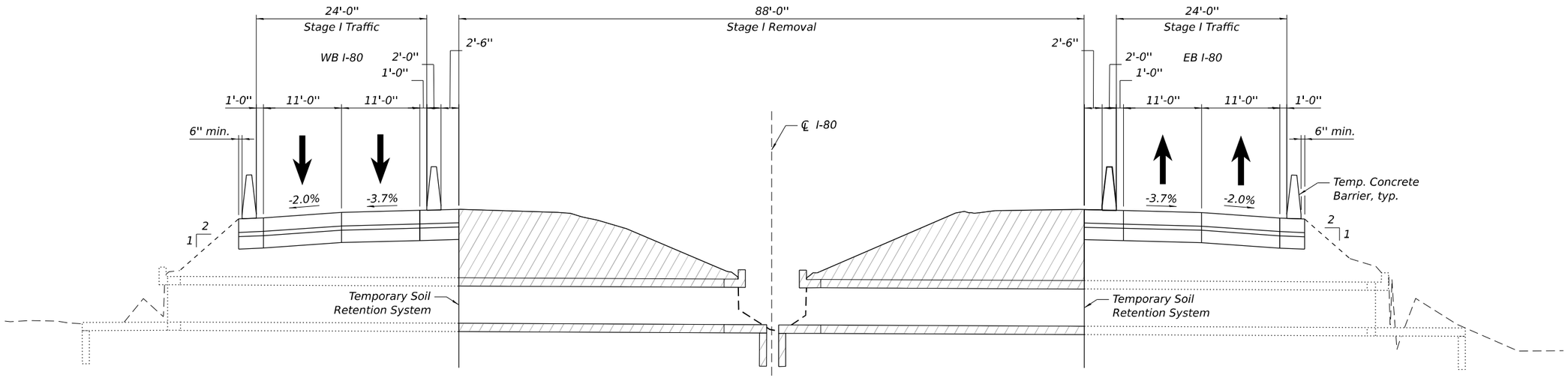

STAGE I REMOVAL

(Looking East)

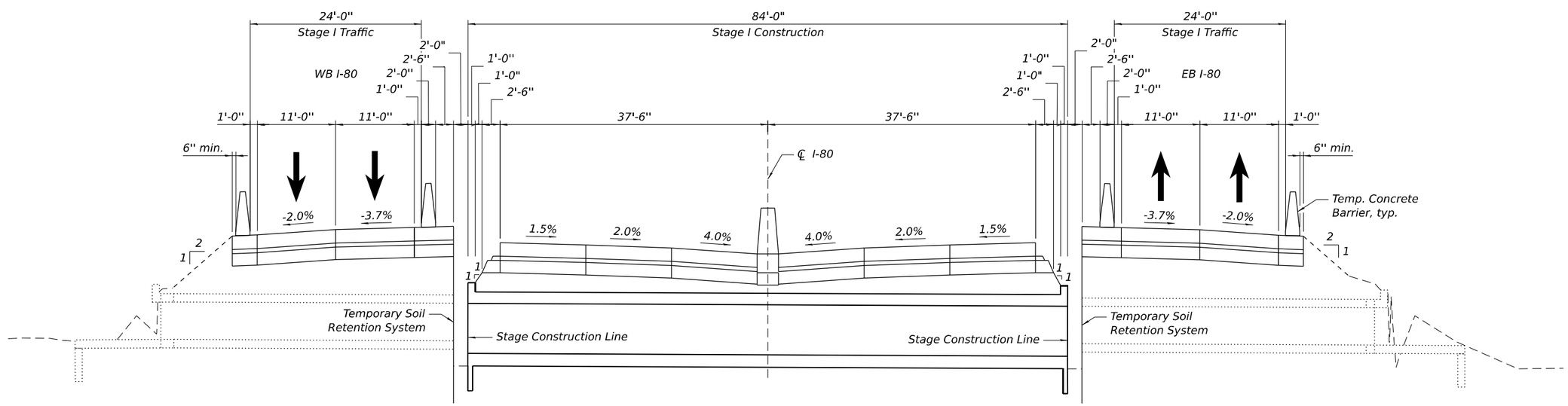

STAGE I CONSTRUCTION

(Looking East)

(Sheet 1 of 2)

AECOM
303 EAST WACKER DRIVE, SUITE 1400
CHICAGO, IL 60601-5276
PHONE: (312) 373-7700 FAX: (312) 373-6800

USER NAME =	DESIGNED - JA	REVISED -
	CHECKED - DD	REVISED -
PLOT SCALE =	DRAWN - JA	REVISED -
PLOT DATE =	CHECKED - DD	REVISED -

STATE OF ILLINOIS
DEPARTMENT OF TRANSPORTATION

STAGING & DETAILS
STRUCTURE NO. 099-0760

SHEET S2-4 OF S2-10 SHEETS

F.A.I. RTE.	SECTION	COUNTY	TOTAL SHEETS	SHEET NO.
I-80	FAI 80 21 STRUCTURE 6	WILL	898	610
		CONTRACT NO. 62R27		
		ILLINOIS	FED. AID PROJECT	

MODEL: Sheet
FILE NAME: pw://transystems-pw.bentley.com:transyscorp-pw1-hosted/Documents/Projects_2018/CH401/401180022/02-TranSystems/CAD/62R27/Sheets/22-Structural/Culvert/62R27-099-0760-004-Culvert Details - Stage I.dgn

7/18/2023 4:09:55 PM

LEGEND

Denotes Removal

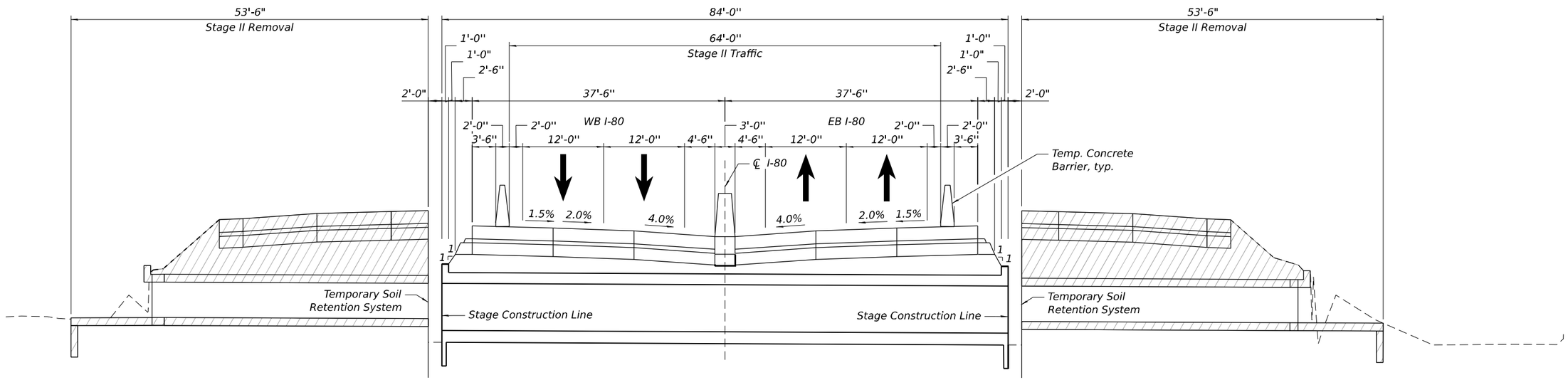

STAGE II REMOVAL

(Looking East)

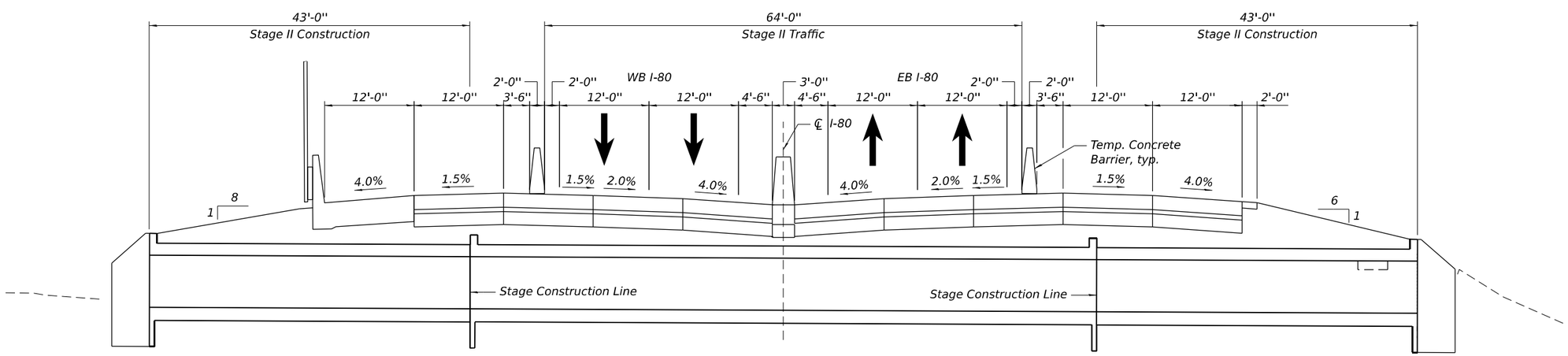

STAGE II CONSTRUCTION

(Looking East)

(Sheet 2 of 2)

MODEL: Sheet
FILE NAME: pw://transystems-pw.bentley.com:transyscorp-pw1-hosted/Documents/Projects_2018/CH401/40118002/02-TranSystems/CAD/62R27/Sheets/22-Structural/Culvert/62R27-099-0760-005-Culvert Details - Stage II.dgn

AECOM
303 EAST WACKER DRIVE, SUITE 1400
CHICAGO, IL 60601-5276
PHONE: (312) 373-7700 FAX: (312) 373-6800

USER NAME =	DESIGNED - JA	REVISED -
	CHECKED - DD	REVISED -
PLOT SCALE =	DRAWN - JA	REVISED -
PLOT DATE =	CHECKED - DD	REVISED -

STATE OF ILLINOIS
DEPARTMENT OF TRANSPORTATION

STAGING & DETAILS
STRUCTURE NO. 099-0760

SHEET S2-5 OF S2-10 SHEETS

F.A.I. RTE.	SECTION	COUNTY	TOTAL SHEETS	SHEET NO.
I-80	FAI 80 21 STRUCTURE 6	WILL	898	611
		CONTRACT NO. 62R27		
		ILLINOIS	FED. AID PROJECT	

7/18/2023 4:10:12 PM

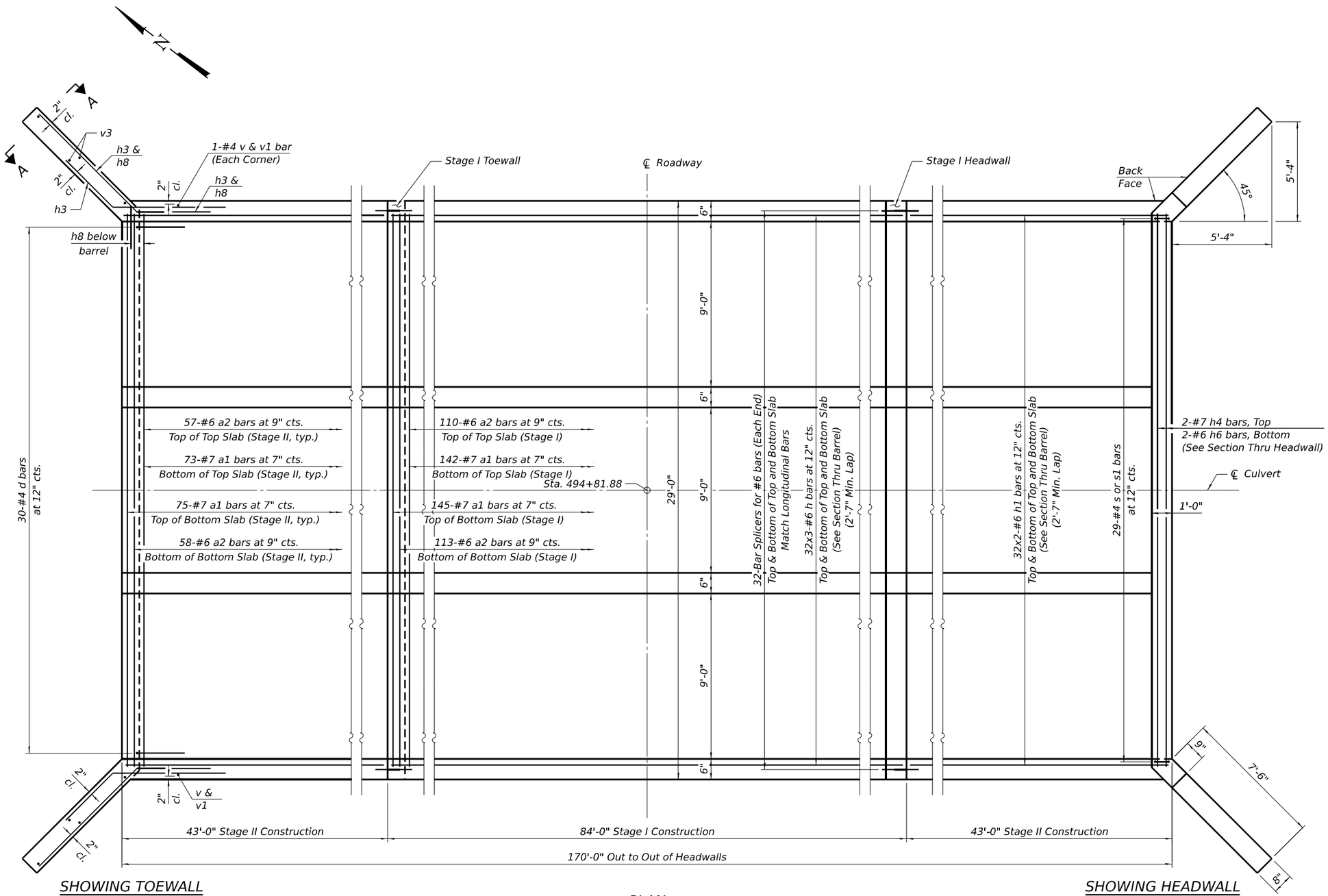

SHOWING TOEWALL

PLAN

SHOWING HEADWALL

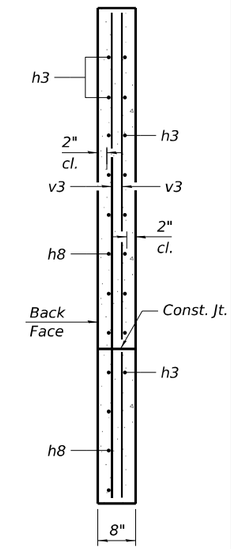

SECTION A-A

Notes:

A distance of half the length of the wingwall but not less than six feet of the barrel shall be poured monolithically with the wingwalls.

Bars indicated thus 12 x 4-#5 etc. indicates 12 lines of bars with 4 lengths per line.

At the Contractor's option, a longer v1 bar may be ordered to replace the v bar. No reduction in quantities shall be made for this substitution.

See sheet S2-9 of S2-10 for Bar Splicer Details.

(Sheet 1 of 3)

AECOM
303 EAST WACKER DRIVE, SUITE 1400
CHICAGO, IL 60601-5276
PHONE: (312) 373-7700 FAX: (312) 373-6800

USER NAME =	DESIGNED - JA	REVISED -	
	CHECKED - DD	REVISED -	
PLOT SCALE =	DRAWN - JA	REVISED -	
PLOT DATE =	CHECKED - DD	REVISED -	

STATE OF ILLINOIS
DEPARTMENT OF TRANSPORTATION

CULVERT DETAILS
STRUCTURE NO. 099-0760

SHEET S2-6 OF S2-10 SHEETS

F.A.I. RTE.	SECTION	COUNTY	TOTAL SHEETS	SHEET NO.
I-80	FAI 80 21 STRUCTURE 6	WILL	898	612

CONTRACT NO. 62R27

ILLINOIS | FED. AID PROJECT

MODEL: Sheet
FILE NAME: pw://transystems-pw.bentley.com:transyscorp-pw1-hosted/Documents/Projects_2018/CH401/401180022/02-TranSystems/CAD/62R27/Sheets/23-Structural/Culvert/62R27-099-0760-006-Culvert Details.dgn

7/18/2023 4:10:33 PM

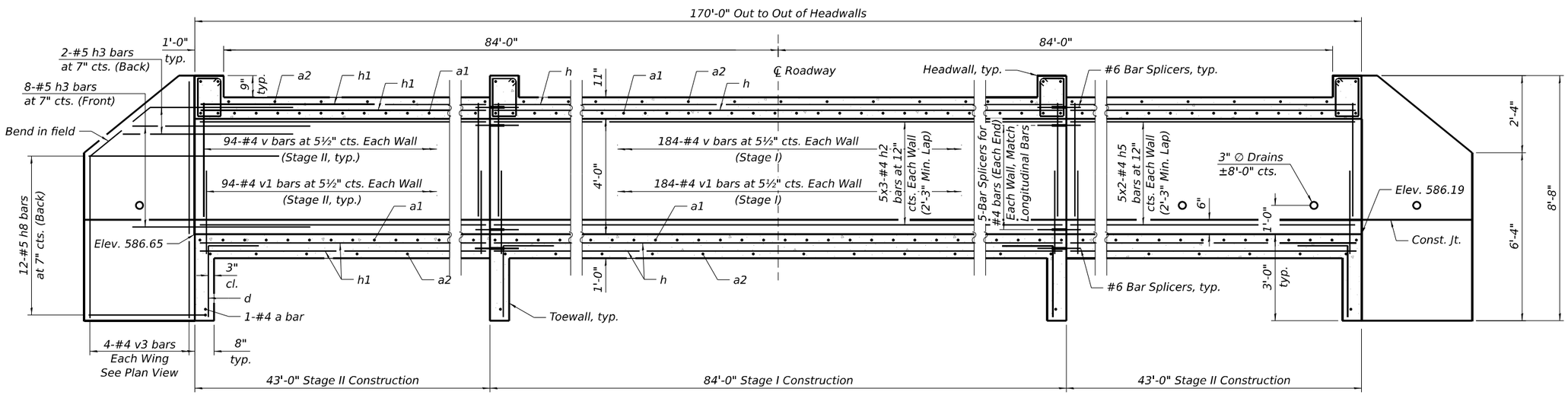

LONGITUDINAL SECTION

(Sheet 2 of 3)

MODEL: Sheet
FILE NAME: pw://transystems-pw.bentley.com:transyscorp-pw1-hosted/Documents/Projects_2018/CH401/401180022/02-TranSystems/CAD/62R27/Sheets/23-Structural/Culvert/62R27-099-0760-007-Culvert Details.dgn

AECOM
303 EAST WACKER DRIVE, SUITE 1400
CHICAGO, IL 60601-5276
PHONE: (312) 373-7700 FAX: (312) 373-6800

USER NAME =	DESIGNED - JA	REVISED -	
	CHECKED - DD	REVISED -	
PLOT SCALE =	DRAWN - JA	REVISED -	
PLOT DATE =	CHECKED - DD	REVISED -	

STATE OF ILLINOIS
DEPARTMENT OF TRANSPORTATION

CULVERT DETAILS
STRUCTURE NO. 099–0760

SHEET S2-7 OF S2-10 SHEETS

F.A.I. RTE.	SECTION	COUNTY	TOTAL SHEETS	SHEET NO.
I-80	FAI 80 21 STRUCTURE 6	WILL	898	613
		CONTRACT NO. 62R27		
		ILLINOIS	FED. AID PROJECT	

7/18/2023 4:10:50 PM

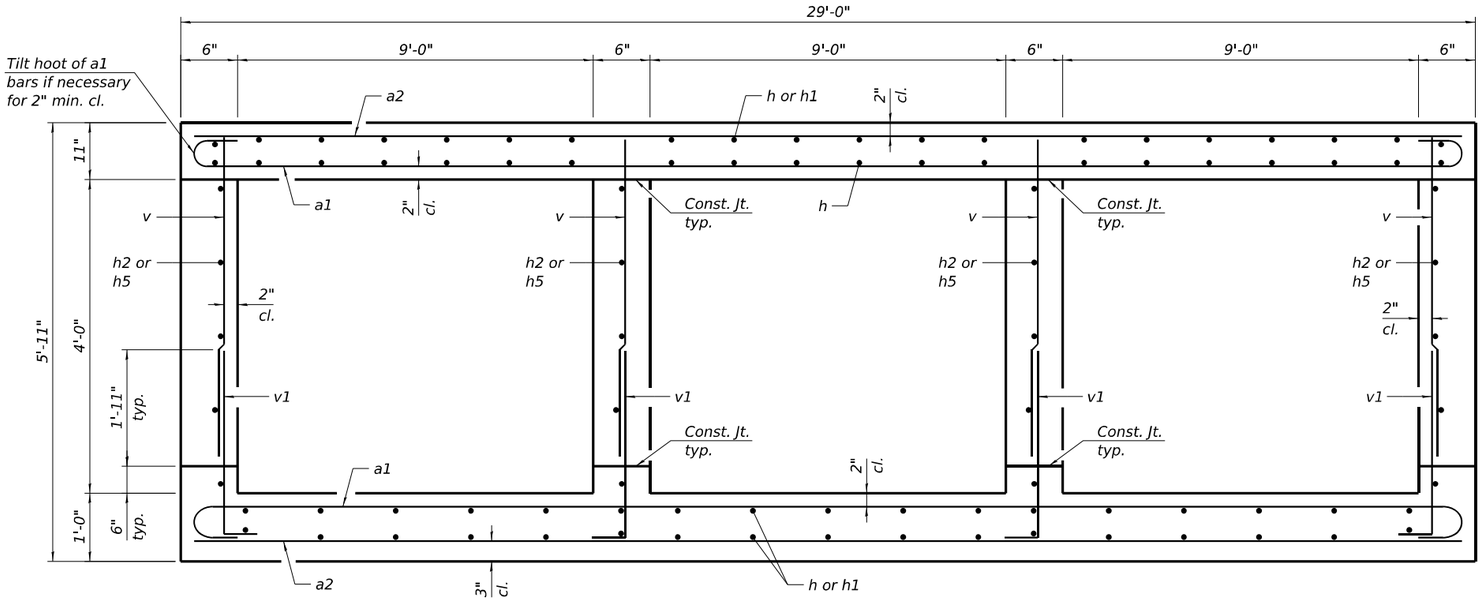

SECTION THRU BARREL

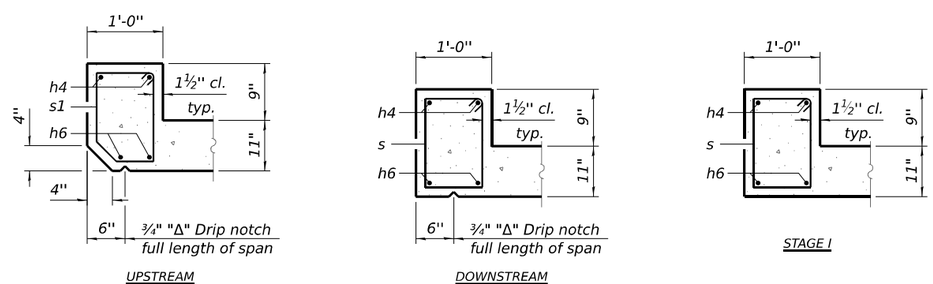

SECTION THRU HEADWALL

BILL OF MATERIAL

Bar	No.	Size	Length	Shape
a	4	#4	28'-8"	
a1	583	#7	30'-4"	
a2	453	#6	28'-8"	
d	120	#4	4'-5"	
h	384	#6	29'-8"	
h1	512	#6	22'-8"	
h2	60	#4	29'-5"	
h3	40	#5	8'-0"	
h4	8	#7	28'-8"	
h5	80	#4	22'-6"	
h6	8	#6	28'-8"	
h8	48	#5	10'-6"	
s	87	#4	5'-1"	
s1	29	#4	5'-0"	
v	1492	#4	4'-1"	
v1	1492	#4	3'-10"	
v3	8	#4	8'-4"	
Concrete Box Culverts		Cu. Yd.	414.9	
Reinforcement Bars		Pound	103,010	

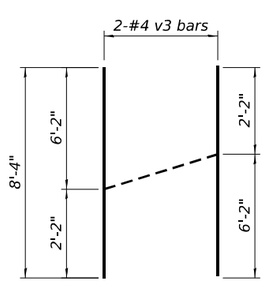

FIELD CUTTING DIAGRAM

Order v3 full length. Cut as shown and use remainder of bars on opposite end.

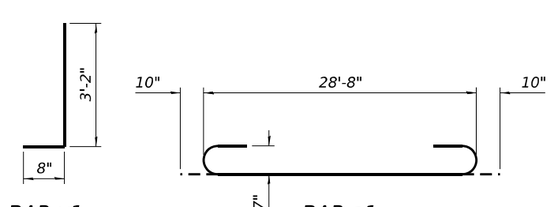

BAR v1 BAR a1

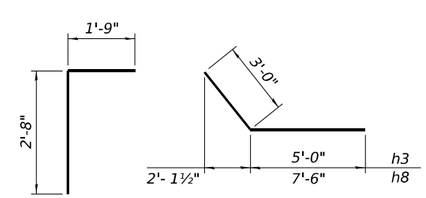

BAR d BARS h3 & h8

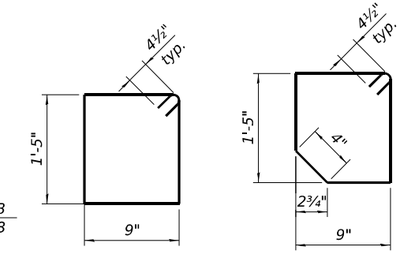

BAR s BAR s1

(Sheet 3 of 3)

MODEL: Sheet
FILE NAME: pw://transystems-pw.bentley.com:transyscorp-pw1-hosted/Documents/Projects_2018/CH401/401180022/02-TranSystems/CAD/62R27/Sheets/22-Structural/Culvert/62R27-099-0760-008-Culvert Details.dgn

AECOM
303 EAST WACKER DRIVE, SUITE 1400
CHICAGO, IL 60601-5276
PHONE: (312) 373-7700 FAX: (312) 373-6800

USER NAME =	DESIGNED - JA	REVISED -	
	CHECKED - DD	REVISED -	
PLOT SCALE =	DRAWN - JA	REVISED -	
PLOT DATE =	CHECKED - DD	REVISED -	

STATE OF ILLINOIS
DEPARTMENT OF TRANSPORTATION

CULVERT DETAILS
STRUCTURE NO. 099–0760
SHEET S2-8 OF S2-10 SHEETS

F.A.I. RTE.	SECTION	COUNTY	TOTAL SHEETS	SHEET NO.
I-80	FAI 80 21 STRUCTURE 6	WILL	898	614
		CONTRACT NO. 62R27		
		ILLINOIS	FED. AID PROJECT	

7/18/2023 4:11:01 PM

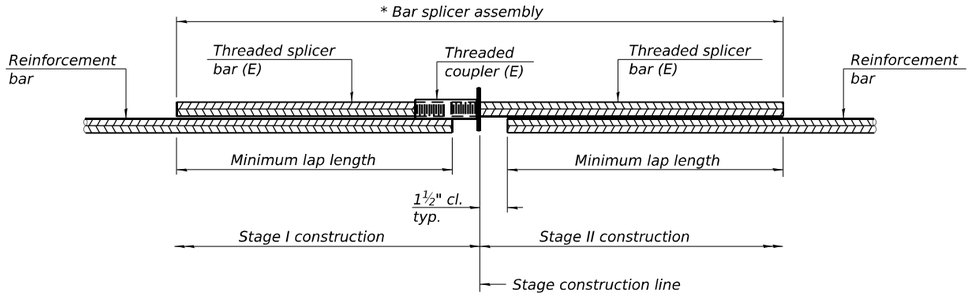

STANDARD BAR SPLICER ASSEMBLY PLAN

Only bar splicer assemblies as presented on the approved QPL list may be used.

Threaded splicer bar length = min. lap length + 1½" + thread length

** Epoxy not required on Bar Splicer Assembly components used in conjunction with black bars.*

Location	Bar size	No. assemblies required	Minimum lap length
Walls	#4	40	2'-3"
Top Slab	#6	128	2'-7"
Bottom Slab	#6	128	2'-7"

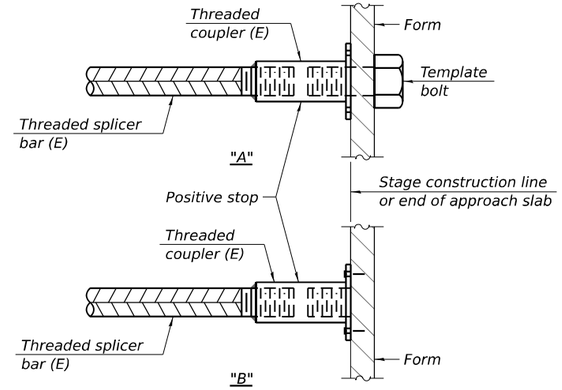

INSTALLATION AND SETTING METHODS

"A" : Set bar splicer assembly by means of a template bolt.
"B" : Set bar splicer assembly by nailing to wood forms or cementing to steel forms.
(E) : Indicates epoxy coating.

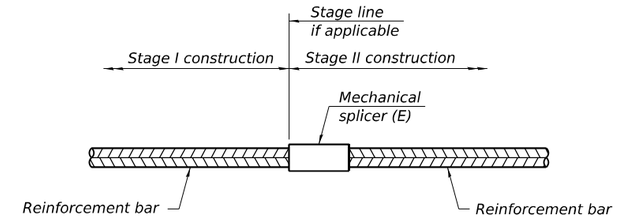

STANDARD MECHANICAL SPLICER

Location	Bar size	No. assemblies required

Notes:
Splicer bars shall be deformed with threaded ends and have a minimum 60 ksi yield strength.
All reinforcement shall be lapped and tied to the splicer bars.
Bar splicer assemblies shall be epoxy coated according to the requirements for reinforcement bars. See Section 508 of the Standard Specifications.
See approved list of bar splicer assemblies and mechanical splicers for alternatives.

BSD-1 2-1-2023

AECOM
303 EAST WACKER DRIVE, SUITE 1400
CHICAGO, IL 60601-5276
PHONE: (312) 373-7700 FAX: (312) 373-6800

USER NAME =	DESIGNED - JA	REVISED -	
	CHECKED - DD	REVISED -	
PLOT SCALE =	DRAWN - JA	REVISED -	
PLOT DATE =	CHECKED - DD	REVISED -	

STATE OF ILLINOIS
DEPARTMENT OF TRANSPORTATION

BAR SPLICER ASSEMBLY AND MECHANICAL SPLICER DETAILS
STRUCTURE NO. 099-0760

SHEET S2-9 OF S2-10 SHEETS

F.A.I. RTE.	SECTION	COUNTY	TOTAL SHEETS	SHEET NO.
I-80	FAI 80 21 STRUCTURE 6	WILL	898	615
		CONTRACT NO. 62R27		
	ILLINOIS	FED. AID PROJECT		

BORING LOG BC1-01

Wang Engineering
wangeng@wangeng.com
1145 N. Main Street
Lombard, IL 60148
Telephone: 630-953-9928
Fax: 630-953-9938

WEI Job No.: 7901-15-01
Client: TranSystems Corporation
Project: I-80 Reconstruction (Houbolt Rd to Center St)
Location: Will County, Illinois

Datum: NAVD 88
Elevation: 591.45 ft
North: 1761251.36 ft
East: 1033005.79 ft
Station: 494+62.97
Offset: 83.678' LT

Elevation (ft)	SOIL AND ROCK DESCRIPTION	Sample No.	SPT Values (blw/6 in)	Qu (tsf)	Moisture Content (%)
590.8	8-inch thick, dark brown SILTY CLAY LOAM --TOPSOIL--				
	Medium stiff to very stiff, black and brown SILTY CLAY to CLAY, trace gravel; damp --FILL--	1	6 3 4	2.00 P	18
		2	3 4 3	0.98 B	31
585.2	Loose, brown SILT; moist to wet	3	1 2 4	NP	26
583.4	Hard, gray SILTY CLAY, trace gravel; damp --RDR 2-- --L_L(%)=33, P_I(%)=15-- --%Gravel=2.7-- --%Sand=10.6-- --%Silt=56.5-- --%Clay=30.2-- --A-6 (14)--	4	5 10 13	5.99 B	18
		5	8 15 43	7.63 B	16
578.4	Medium dense to dense, gray SANDY GRAVEL; wet	6	9 17 15	NP	7
		7	32 12 15	NP	9
573.4	Stiff, gray SILTY CLAY LOAM, trace gravel; damp	8	11 10 17	1.50 P	14
570.9	Very dense, GRAVEL; wet	9	50/4"	NP	6
	--AUGER REFUSAL--	10	50/4"	NP	10
566.4	Boring terminated at 25.00 ft				

Depth (ft): 5, 10, 15, 20, 25, 30, 35, 40

GENERAL NOTES

Begin Drilling: 02-21-2023 Complete Drilling: 02-21-2023
Drilling Contractor: Wang Testing Services Drill Rig: 21D50A [84%]
Driller: KS&AP Logger: N. Karahalios Checked by: J. Bensen
Drilling Method: 2.25" IDA HSA; boring backfilled upon completion

WATER LEVEL DATA

While Drilling: 7.00 ft
At Completion of Drilling: 20.00 ft
Time After Drilling: NA
Depth to Water: NA

The stratification lines represent the approximate boundary between soil types; the actual transition may be gradual.

BORING LOG BC1-02

Wang Engineering
wangeng@wangeng.com
1145 N. Main Street
Lombard, IL 60148
Telephone: 630-953-9928
Fax: 630-953-9938

WEI Job No.: 7901-15-01
Client: TranSystems Corporation
Project: I-80 Reconstruction (Houbolt Rd to Center St)
Location: Will County, Illinois

Datum: NAVD 88
Elevation: 596.73 ft
North: 1761222.10 ft
East: 1033141.99 ft
Station: 495+32.62
Offset: 36.964' RT

Elevation (ft)	SOIL AND ROCK DESCRIPTION	Sample No.	SPT Values (blw/6 in)	Qu (tsf)	Moisture Content (%)
596.6	1-inch thick ASPHALT				
595.9	9-inch thick CONCRETE --PAVEMENT--				
	Hard, brown SILTY CLAY LOAM, some gravel; damp --FILL-- --RDR 2--	1	4 6 10	4.00 P	13
593.7	Medium dense, light gray SANDY GRAVEL; dry --FILL-- --RDR 2--	2	15 20 8	NP	7
		3	16 16 13	NP	4
588.7	Very stiff, black CLAY, trace gravel; damp --Buried TOPSOIL-- --RDR 2-- --L_L(%)=68, P_I(%)=21-- --%Gravel=0.1-- --%Sand=4.5-- --%Silt=49.6-- --%Clay=45.9-- --A-7-6 (50)--	4	3 3 4	2.79 B	28
586.2	Stiff to hard, brown and gray SILTY CLAY, trace gravel; damp --wet silt seam @11'-- --RDR 2-- --L_L(%)=44, P_I(%)=17-- --%Gravel=1.7-- --%Sand=11.3-- --%Silt=51.9-- --%Clay=35.2-- --A-7-6 (24)--	5	1 4 3	1.48 B	24
		6	4 5 6	4.51 B	19
		7	7 11 16	6.56 B	18
578.7	Medium dense to dense, brown to gray LOAM, little gravel; moist to wet --RDR 2--	8	27 17 17	NP	4
575.0	--Qu: 4.00P-- Very stiff to hard, gray SILTY CLAY LOAM to SILTY LOAM, trace gravel; damp to moist --RDR 2--	9	27 14 9	NP	9
		10	6 12 8	3.50 P	10
570.7	--AUGER REFUSAL @ 26'-- Boring terminated at 26.00 ft				

Depth (ft): 5, 10, 15, 20, 25, 30, 35, 40

GENERAL NOTES

Begin Drilling: 01-27-2023 Complete Drilling: 01-27-2023
Drilling Contractor: Wang Testing Services Drill Rig: 20CME55T[81%]
Driller: KG&TC Logger: B. Miller Checked by: J. Bensen
Drilling Method: 3.25" IDA HSA; boring backfilled upon completion

WATER LEVEL DATA

While Drilling: 11.00 ft
At Completion of Drilling: 18.00 ft
Time After Drilling: NA
Depth to Water: NA

The stratification lines represent the approximate boundary between soil types; the actual transition may be gradual.

BORING LOG BC1-03

Wang Engineering
wangeng@wangeng.com
1145 N. Main Street
Lombard, IL 60148
Telephone: 630-953-9928
Fax: 630-953-9938

WEI Job No.: 7901-15-01
Client: TranSystems Corporation
Project: I-80 Reconstruction (Houbolt Rd to Center St)
Location: Will County, Illinois

Datum: NAVD 88
Elevation: 590.30 ft
North: 1761168.24 ft
East: 1033164.33 ft
Station: 495+07.66
Offset: 89.662' RT

Elevation (ft)	SOIL AND ROCK DESCRIPTION	Sample No.	SPT Values (blw/6 in)	Qu (tsf)	Moisture Content (%)
589.0	6-inch thick, black and brown SILTY CLAY LOAM --TOPSOIL--				
	Very stiff, brown SILTY CLAY LOAM, trace gravel --RDR 2-- --FILL--	1	3 4 5	2.13 B	16
587.3	Medium stiff, black and dark brown CLAY --Buried TOPSOIL--	2	3 3 4	0.74 B	29
584.8	Very stiff, brown SILTY CLAY, trace gravel --RDR 2--	3	2 3 6	2.79 B	21
583.3	6-inch thick GRAVELLY LOAM; wet				
	Hard, brown to gray SILTY CLAY, trace gravel --RDR 2--	4	4 7 13	4.67 B	17
		5	5 9 13	4.84 B	16
576.3	Dense, brown SANDY GRAVEL; dry to saturated --RDR 4-- --possible cobbles--	6	7 27 22	NP	6
573.8	Dense, gray SILTY LOAM, trace gravel; damp	7	11 12 19	NP	10
572.3	Very strong, light gray, very poor quality, DOLOSTONE; closely spaced, slightly weathered, horizontal and oblique joints, with <0.2 inch opening, slightly rough walls, and <0.2 inch infill. --RUN 1: 18 to 25 feet-- --Recovery: 99%-- --RQD: 24%--	CORE 8			
565.3	Boring terminated at 25.00 ft				

Depth (ft): 5, 10, 15, 20, 25, 30, 35, 40

GENERAL NOTES

Begin Drilling: 02-28-2023 Complete Drilling: 02-28-2023
Drilling Contractor: Wang Testing Services Drill Rig: 21GeoA[96%]
Driller: AG&FH Logger: F. Bozga Checked by: J. Bensen
Drilling Method: 3.25" IDA HSA; boring backfilled upon completion

WATER LEVEL DATA

While Drilling: 6.50 ft
At Completion of Drilling: 8.00 ft
Time After Drilling: NA
Depth to Water: NA

The stratification lines represent the approximate boundary between soil types; the actual transition may be gradual.

Benchmark: Cut cross on top of northerly foundation bolt of the first light pole west of the gore at I-80 west bound and I-80 off-ramp to Houbolt Road, south of the ramp, on the north side of westbound I-80 at Station 451+72.30, Offset 110.04' LT, Elev. 595.744. See Alignment, Tie and Benchmark Sheets.

Existing Structure: None.

Proposed Structure: The proposed noise abatement wall is a ground mounted noise abatement wall with a total length of 1,110'-8" and a maximum height of approximately 19'-1" measured from proposed grade to top of noise wall.

Salvage: None.

STATE OF ILLINOIS
MOUSSA A. ISSA
081-005738
CHICAGO, ILLINOIS
LICENSED STRUCTURAL ENGINEER

Signed Moussa A. Issa
Dr. Moussa A. Issa, S.E. IL. LIC. No. 081-005738
Expires 11-30-2024
Date 06/21/2023 For Sheets S3-1 thru S3-7

NOTES:

1. For General Notes, Index of Sheets, General Details and Total Bill of Material, see Sheet S3-3
2. Stations are measured along and offsets are measured to PR ℄ Houboult Ramp B.
3. The length of wall is measured along the centerline of the noise wall.

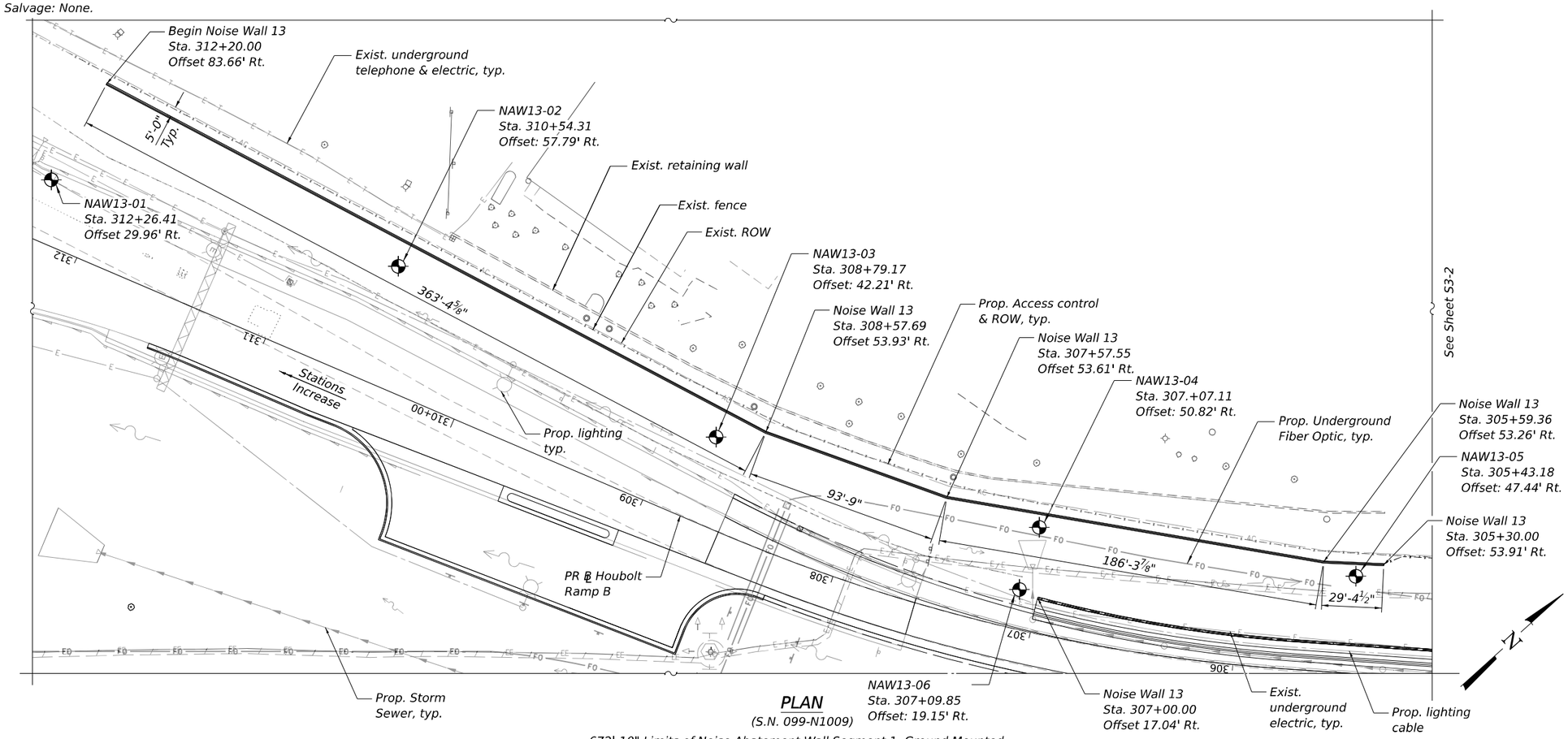

PLAN
(S.N. 099-N1009)

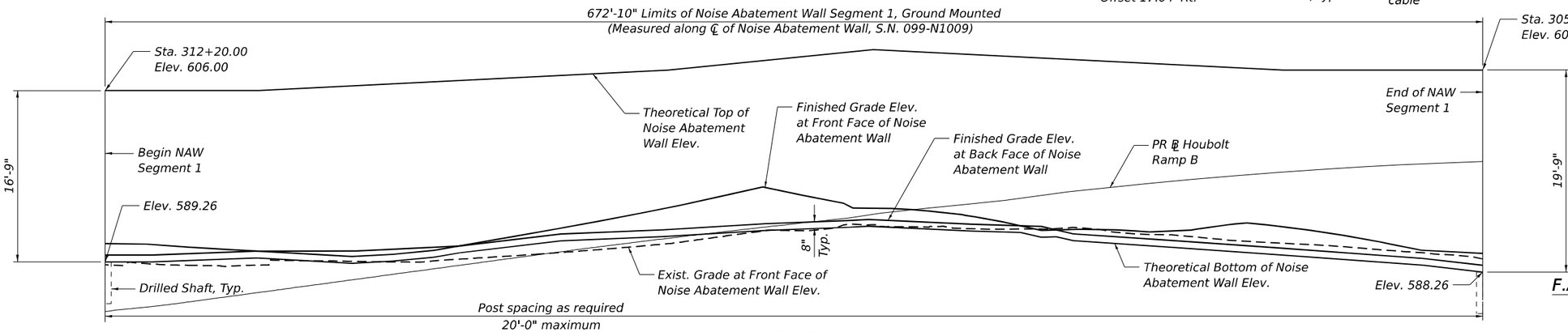

ELEVATION
(S.N. 099-N1009)

LEGEND:

- Exist. Underground Telephone
- Exist. Underground Electric
- Prop. Underground Electric
- Prop. Lighting Cable
- Exist. Underground Gas
- Exist. Aerial Line
- Exist. Underground Fiber Optic
- Prop. Underground Fiber Optic
- Exist. Underground Cable
- Exist. Pipe Underdrain
- Prop. Pipe Underdrain
- Exist. Storm Sewer
- Prop. Storm Sewer
- Prop. Guardrail
- Exist. Guardrail
- Exist. Fence
- Exist. Access Control & ROW
- Exist. Cable Barrier
- Exist. Lighting.
- Prop. Lighting
- Prop. Drainage
- Prop. Concrete Headwall
- Soil Boring

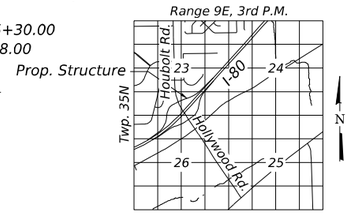

LOCATION SKETCH

GENERAL PLAN AND ELEVATION
NOISE ABATEMENT WALL ALONG HOUBOLT RAMP B
F.A.I. RTE. I-80 SEC. FAI 80 21 STRUCTURE 6
WILL COUNTY
STA 312+20.00 TO STA. 302+60.00
SN 099-N1009 & 099-N1010 (NOISE WALL 13)

MODEL: BL_PR_I80 - Plan 3 [Sheet]
FILE NAME: pw://transystems-pw.bentley.com:TRANSYSCORP-PW1-HOSTED/Documents/Projects_2018/CH401/401180022/02-TranSystems/CAD/62R27/Sheets/23-Structural/Noise Walls/D162R27-SHT-NAW13-STRUCT-S1

HBM ENGINEERING GROUP, LLC

USER NAME = aditya.joshi	DESIGNED - PG	REVISED -	
	DRAWN - PG	REVISED -	
PLOT SCALE =	CHECKED - LAB, MAI	REVISED -	
PLOT DATE = 8/11/2023	DATE - 6/26/23	REVISED -	

STATE OF ILLINOIS
DEPARTMENT OF TRANSPORTATION

GENERAL PLAN AND ELEVATION 1
NOISE ABATEMENT WALL 13 – SN 099–N1009

SCALE: | SHEET S3-1 OF S3-8 SHEETS | STA. TO STA.

F.A.I. RTE.	SECTION	COUNTY	TOTAL SHEETS	SHEET NO.
I-80	FAI 80 21 STRUCTURE 6	WILL	898	617
		CONTRACT NO. 62R27		
	ILLINOIS	FED. AID PROJECT		

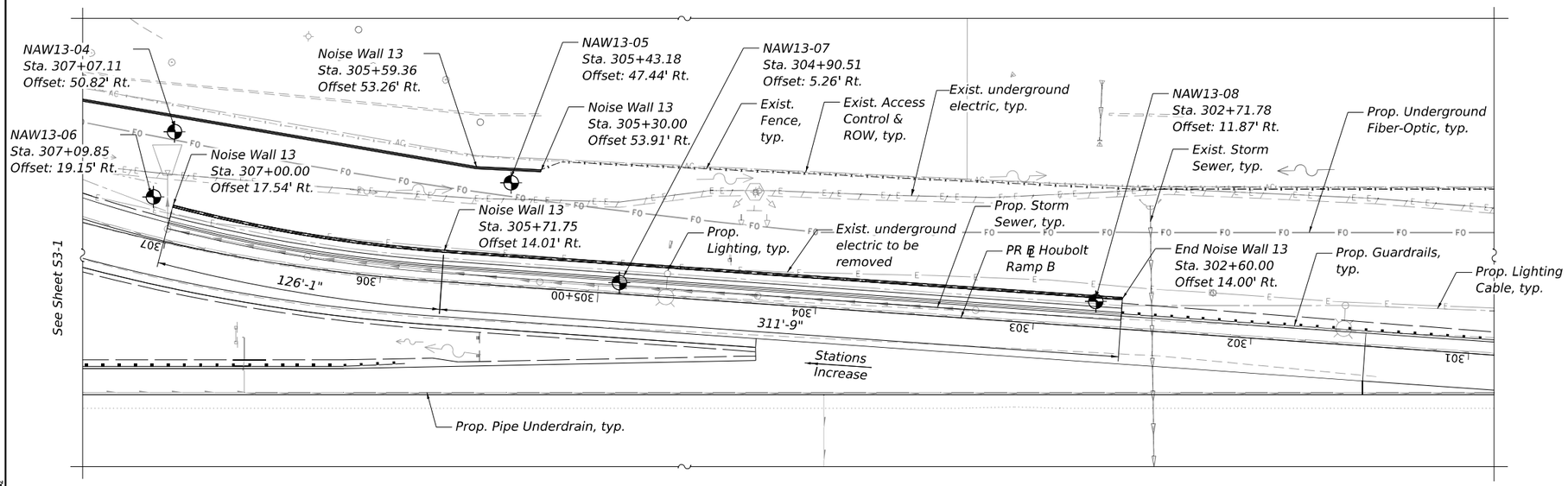

PLAN
(S.N. 099-N1010)

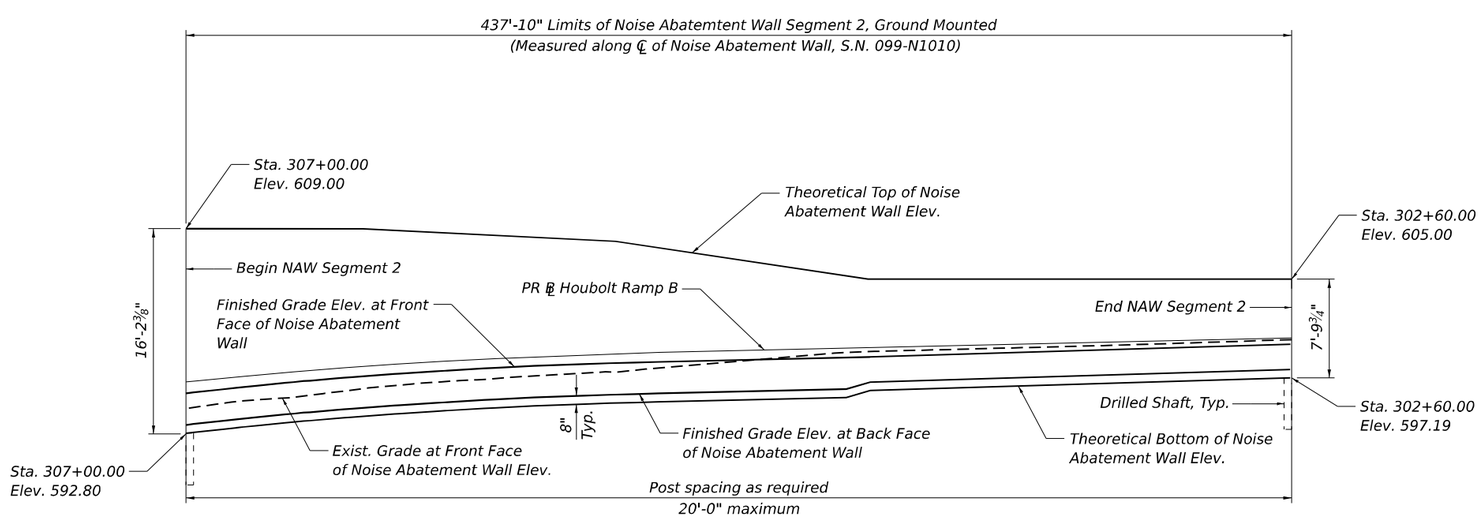

ELEVATION
(S.N. 099-N1010)

NOTES:

1. For General Notes, Index of Sheets, General Details and Total Bill of Material, see Sheet S3-3
2. Stations are measured along and offsets are measured to PR ℄ Houbolt Ramp B.
3. The length of wall is measured along the centerline of the noise wall.

LEGEND:

- Exist. Underground Telephone
- Exist. Underground Electric
- Prop. Underground Electric
- Prop. Lighting Cable
- Exist. Underground Gas
- Exist. Aerial Line
- Exist. Underground Fiber Optic
- Prop. Underground Fiber Optic
- Exist. Underground Cable
- Exist. Pipe Underdrain
- Prop. Pipe Underdrain
- Exist. Storm Sewer
- Prop. Storm Sewer
- Prop. Guardrail
- Exist. Guardrail
- Exist. Fence
- Exist. Access Control & ROW
- Exist. Cable Barrier
- Exist. Lighting.
- Prop. Lighting
- Prop. Drainage
- Prop. Concrete Headwall
- Soil Boring

MODEL: BL_PR_I80 - Plan 3 [Sheet]
FILE NAME: pw://transystems-pw.bentley.com:TRANSYSCORP-PW1-HOSTED/Documents/Projects_2018/CH401/401180022/02-TranSystems/CAD/62R27/Sheets/23-Structural/Noise Walls/D16ZR27-SHT-NAW13-STRUCT-2

HBM ENGINEERING GROUP, LLC	USER NAME = aditya.joshi	DESIGNED - PG	REVISED -	STATE OF ILLINOIS DEPARTMENT OF TRANSPORTATION	GENERAL PLAN AND ELEVATION 2 NOISE ABATEMENT WALL 13 – SN 099–N1010	F.A.I. RTE.	SECTION	COUNTY	TOTAL SHEETS	SHEET NO.
		DRAWN - PG	REVISED -			I-80	FAI 80 21 STRUCTURE 6	WILL	898	618
	PLOT SCALE =	CHECKED - LAB, MAI	REVISED -					CONTRACT NO. 62R27		
	PLOT DATE = 8/11/2023	DATE - 6/26/23	REVISED -		SCALE: SHEET S3-2 OF S3-8 SHEETS STA. TO STA.		ILLINOIS FED. AID PROJECT			

GENERAL NOTES

1. The Contractor shall field verify location of the existing utilities prior to construction. The Contractor shall take precautions not to damage existing utilities. Any such damage shall be repaired by the Contractor at no additional cost.

2. Noise Abatement Wall drilled shaft foundation diameter, depth and spacing to be determined by the Contractor.

3. Contractor shall provide Ashlar Stone Finish on both faces of Noise Abatement Wall. See Sheet S3-8.

4. All underground utilities or drainage structure removal or installation shall be completed prior to foundation installation.

5. Hard drilling is anticipated down to Elevation 578.6 based on Borings NAW13-03 and 13-04; however, bedrock was not observed in these borings. The Contractor shall provide a method to ensure the NAW drilled shafts achieve at least the tip elevation required by design. No additional compensation will be provided for drilling methods required through these soils.

6. Any rock excavation required for noise wall construction will not be paid separately and will be included with Noise Abatement Wall, Ground Mounted.

INDEX OF SHEETS

S3-1	General Plan And Elevation 1
S3-2	General Plan And Elevation 2
S3-3	General Notes And Bill of Material
S3-4	Data Tables, Profile Grade, And Horizontal Curve Data
S3-5	Soil Borings 1
S3-6	Soil Borings 2
S3-7	Soil Borings 3
S3-8	Ashlar Stone Finish

DESIGN SPECIFICATIONS

AASHTO LRFD Bridge Design Specifications, 9th Edition

DESIGN STRESSES

FIELD UNITS
f'c = 4,000 psi
fy = 60,000 psi (Reinforcement)
fy = 50,000 psi (Struct. Steel, M270 Grade 50, posts)
fy = 36,000 psi (Struct. Steel, M270 Grade 36, all other structural steel)

PRECAST UNITS
f'c = 4,500 psi
fy = 60,000 psi (Reinforcement)
fy = 65,000 psi (Welded Wire Reinforcement)

DESIGN LOADS

Strength III or V Wind: 35 psf
Service I Wind: 15 psf
Unfactored Max. Active Earth Pressure: 130 psf
Unfactored Live Load Surcharge: 87 psf

TOTAL BILL OF MATERIAL

ITEM	UNIT	SN 099-N1009	SN 099-N1010	TOTAL
Name Plates	Each	1	1	2
Geocomposite Wall Drain	Sq Yd	137	146	283
Pipe Underdrains For Structures 4"	Foot	673	438	1,111
Noise Abatement Wall, Ground Mounted	Sq Ft	11,932	4,998	16,930

NOISE REDUCTION DATA

Noise Wall Structure Number	Face	From Sta.	To Sta.	Noise Reduction	Comments
SN 099-N1009 & SN 099-N1010	Roadway Face	312+20.00	302+60.00	Reflective	-
	Residential Face	312+20.00	302+60.00	Reflective	-

UTILITY CROSSING TABLE

UTILITY	STATION**	OFFSET (LT)**	ELEV. (FT)	COMMENTS
Exist. Underground Electric	453+84.90	124.27'	-	Runs Parallel to Noise Wall

* Stations and Offsets are measured to the centerline of proposed noise abatement wall unless noted otherwise

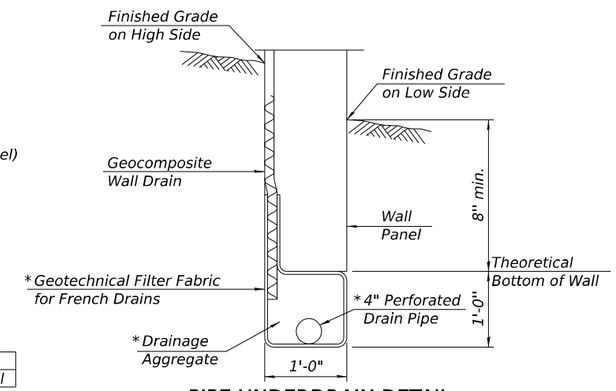

PIPE UNDERDRAIN DETAIL AT DRILLED SHAFTS

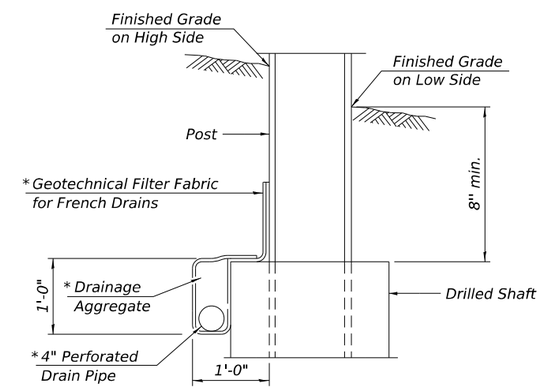

*Included in the cost of Pipe Underdrains for Structures 4"

PIPE UNDERDRAIN DETAIL AT DRILLED SHAFTS

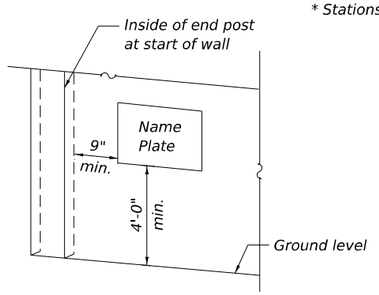

NAME PLATE FOR NOISE ABATEMENT WALL, GROUND MOUNTED

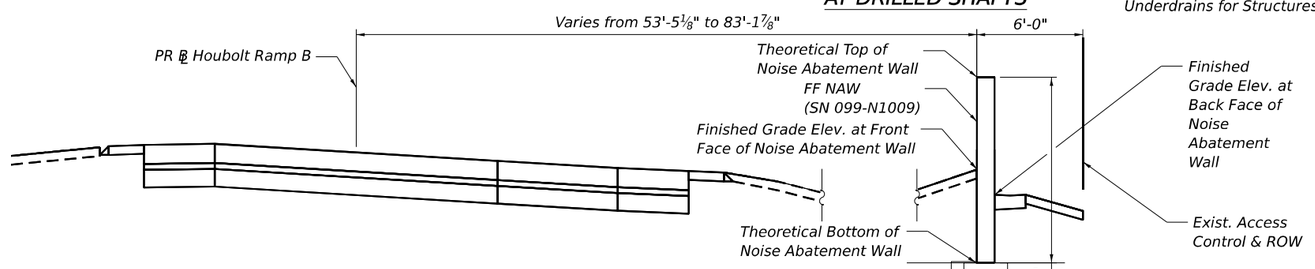

TYPICAL SECTION THRU WALL

Sta. 312+20.00 to Sta. 307+00.00***
3'-0" Maximum Retained Fill Height

NOISE ABATEMENT WALL
BUILT 202_ BY
STATE OF ILLINOIS
F.A.I. RTE. I-80
SECTION FAI 80 21 STRUCTURE 6
FROM STA. 312+20.00 TO STA. 305+30.00
STRUCTURE NO. 099-N1009

NAME PLATE

See Std. 515001

NOISE ABATEMENT WALL
BUILT 202_ BY
STATE OF ILLINOIS
F.A.I. RTE. I-80
SECTION FAI 80 21 STRUCTURE 6
FROM STA. 307+00.00 TO STA. 302+60.00
STRUCTURE NO. 099-N1010

NAME PLATE

See Std. 515001

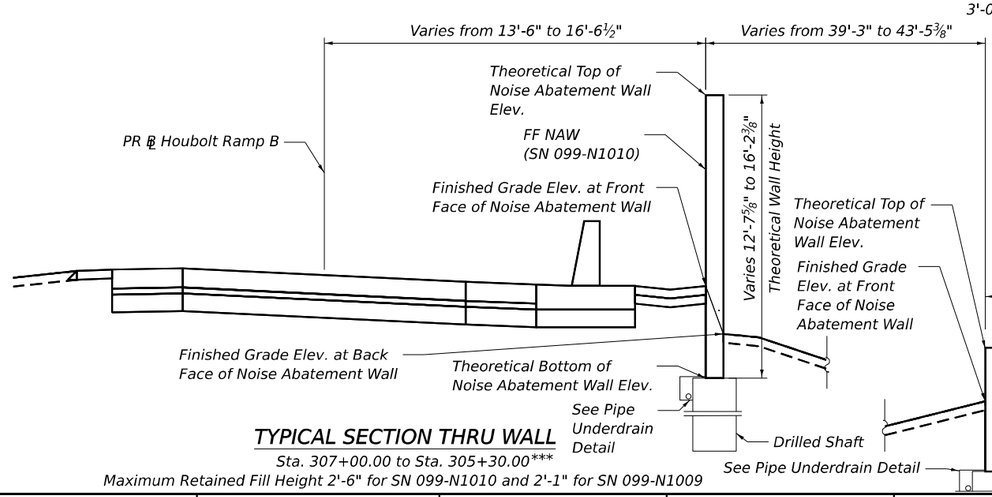

TYPICAL SECTION THRU WALL

Sta. 307+00.00 to Sta. 305+30.00***
Maximum Retained Fill Height 2'-6" for SN 099-N1010 and 2'-1" for SN 099-N1009

***Sta. Measured Along PR ℄ Houbolt Ramp B

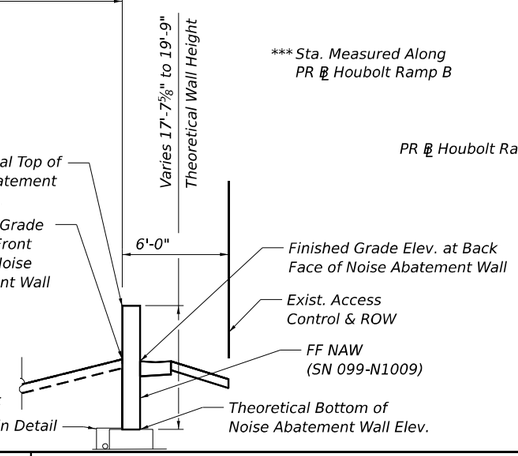

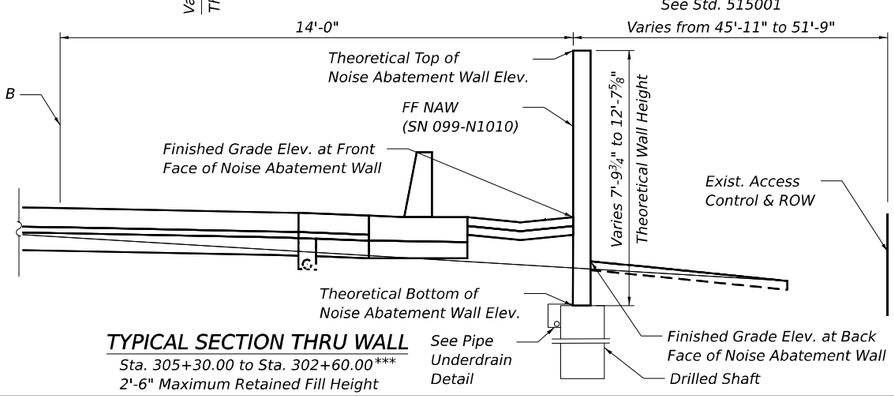

TYPICAL SECTION THRU WALL

Sta. 305+30.00 to Sta. 302+60.00***
2'-6" Maximum Retained Fill Height

MODEL: BL_PR_I80 • Plan 3 [Sheet]
FILE NAME: pw://transystems-pw.bentley.com:transyscom-pw1-hosted/Documents/Projects_2018/CH401/401180022/02-TransSystems/CAD/62R27/Sheets/23-Structural/Noise Walls/D162R27-SHT-NAW13-STRUCT-3

HBM ENGINEERING GROUP, LLC

USER NAME = lisa.buntin	DESIGNED - PG	REVISED -
	DRAWN - PG	REVISED -
PLOT SCALE =	CHECKED - LAB, MAI	REVISED -
PLOT DATE = 8/10/2023	DATE - 6/26/23	REVISED -

STATE OF ILLINOIS
DEPARTMENT OF TRANSPORTATION

GENERAL NOTES AND BILL OF MATERIAL
NOISE ABATEMENT WALL 13

SCALE: | SHEET S3-3 OF S3-8 SHEETS | STA. TO STA.

F.A.I. RTE.	SECTION	COUNTY	TOTAL SHEETS	SHEET NO.
I-80	FAI 80 21 STRUCTURE 6	WILL	898	619
		CONTRACT NO. 62R27		
		ILLINOIS	FED. AID PROJECT	

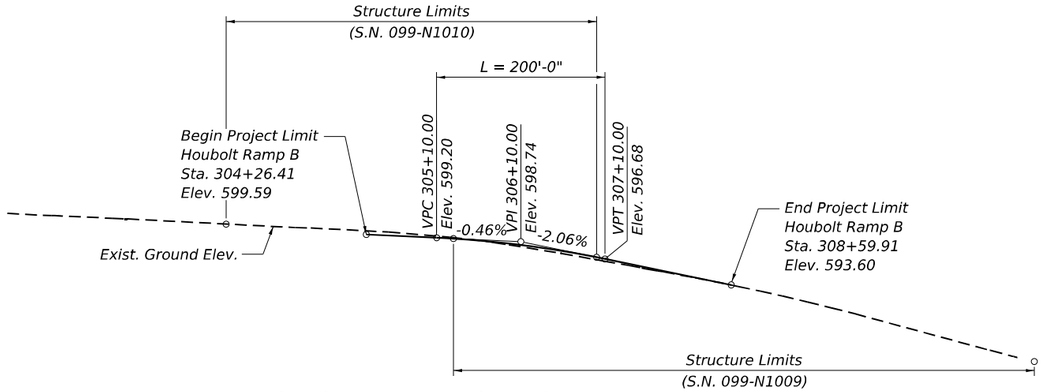

HOUBOLT RAMP B PROFILE GRADE

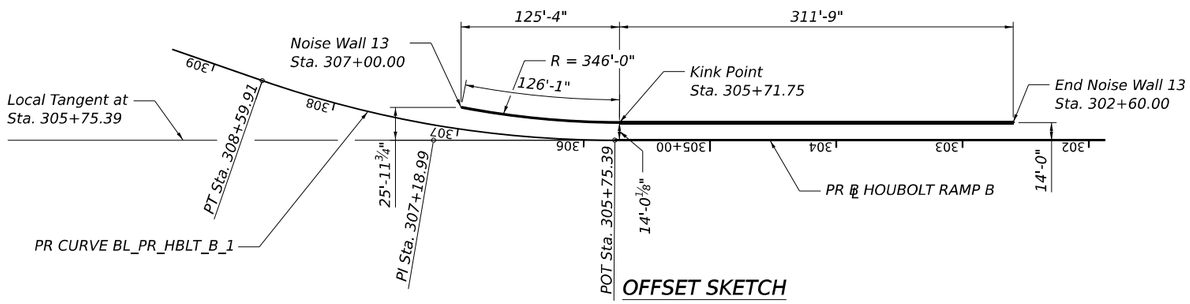

OFFSET SKETCH

(S.N. 099-N1009)

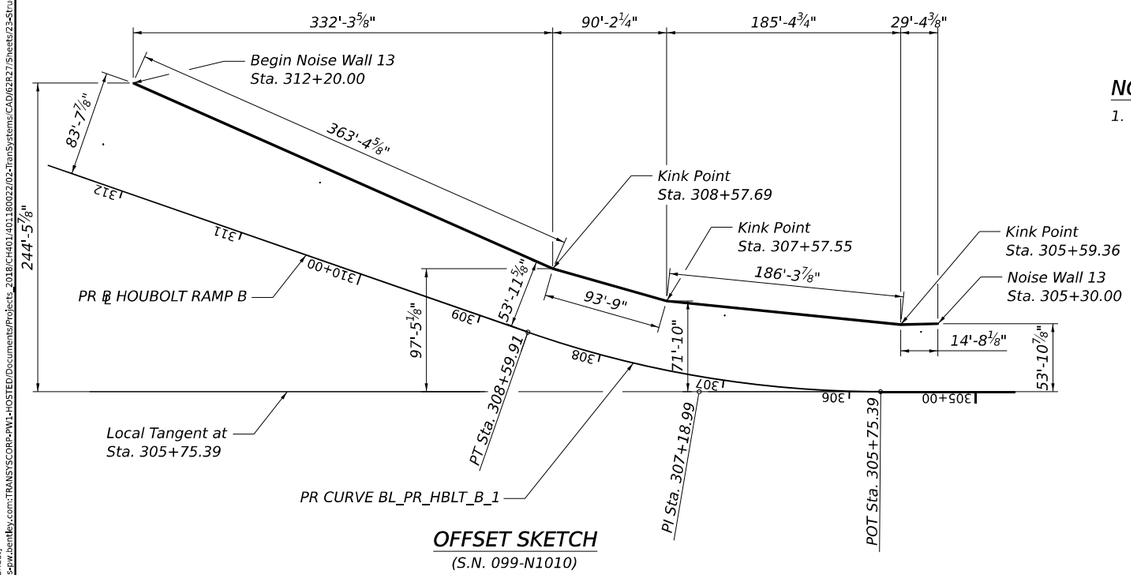

OFFSET SKETCH

(S.N. 099-N1010)

EX CURVE BL_EX_HBLT_B_1

P.I. Sta. = 203+52.27
Δ = 20°07'34" (RT)
D = 06°44'26"
R = 850.00'
T = 150.84'
L = 298.58'
E = 13.28'
e =
T.R. =
S.E. Run =
P.C. Sta. = 202+01.42
P.T. Sta. = 205+00.00

PR CURVE BL_EX_HBLT_B_1

P.I. Sta. = 307+18.99
Δ = 19°10'42" (RT)
D = 06°44'26"
R = 850.00'
T = 143.60'
L = 284.52
E = 12.05'
e = 6.00%
T.R. = 64'
S.E. Run = 192'
P.C. Sta. = 305+75.39
P.T. Sta. = 308+59.91
DESIGN SPEED = 50 MPH

NOTE:

1. Theoretical Top of NAW Elev., Theoretical Bottom of NAW Elev., Finished Grade Elev. at Front Face of NAW, and Finished Grade Elev. at Back Face of NAW shall be taken as straight lines in the segments between each pair of stations shown in the NAW Data Table.

NOISE ABATEMENT WALL DATA TABLE

Segment 1 SN 099-N1009

Station	Offset (Rt.) to Centerline Wall (ft)	Theoretical Top of NAW Elev.	℄ Houbolt Ramp B Profile Elev.	Finished Grade Elev. At Front Face of NAW	Finished Grade Elev. At Back Face of NAW	Existing Grade Elev. At Front Face of NAW	Theoretical Bottom of NAW Elev.	Theoretical Wall Height (ft)
312+20.00	83.66	606.00	584.41	591.04	589.93	589.30	589.26	16.74
312+00.00	82.02	606.00	584.47	591.04	589.93	588.95	589.26	16.74
311+50.00	77.91	606.00	585.66	590.55	590.15	588.88	589.48	16.52
311+28.21	76.12	606.00	586.25	590.30	590.30	588.93	589.63	16.37
311+27.73	76.09	606.00	586.26	590.29	590.30	588.93	589.62	16.38
311+00.00	73.81	606.28	587.01	589.97	590.31	589.36	589.30	16.97
310+82.39	72.36	606.45	587.49	589.77	590.32	589.31	589.10	17.35
310+50.00	69.71	606.78	588.37	590.23	590.61	589.22	589.56	17.22
310+42.25	69.07	606.85	588.58	590.37	590.69	589.36	589.71	17.15
310+29.66	68.04	606.98	588.92	590.81	590.81	589.52	590.14	16.84
310+27.73	67.88	607.00	588.97	590.88	590.86	589.55	590.19	16.81
310+00.00	65.60	607.28	589.72	591.85	591.51	589.89	590.84	16.43
309+80.00	63.96	607.48	590.25	592.56	591.98	590.17	591.31	16.16
309+50.00	61.50	607.78	591.01	593.68	592.23	590.64	591.56	16.22
309+27.73	59.67	608.00	591.56	594.55	592.42	591.04	591.75	16.25
309+00.00	57.39	608.55	592.21	595.76	592.75	591.78	592.08	16.47
308+57.69	53.93	609.40	593.16	595.58	593.16	592.33	592.50	16.90
308+50.00	54.30	609.55	593.32	595.29	593.22	592.49	592.56	17.00
308+30.00	54.95	609.95	593.84	594.50	593.41	592.88	592.74	17.21
308+27.73	54.99	610.00	593.91	594.49	593.39	592.89	592.72	17.28
308+00.00	55.10	609.72	594.52	594.21	593.13	592.71	592.46	17.26
307+80.00	54.64	609.52	594.93	593.72	592.94	592.49	592.28	17.25
307+57.55	53.61	609.30	595.43	592.87	592.80	592.46	592.13	17.17
307+55.78	53.80	609.28	595.48	592.79	592.79	592.46	592.12	17.16
307+50.00	54.39	609.22	595.63	592.53	592.75	592.47	591.86	17.36
307+45.88	54.79	609.18	595.74	592.35	592.72	592.47	591.68	17.50
307+38.37	55.47	609.11	595.94	592.38	592.38	592.51	591.71	17.39
307+30.00	56.15	609.02	596.16	592.42	591.98	592.62	591.32	17.71
307+27.73	56.32	609.00	596.20	592.44	591.95	592.59	591.29	17.71
307+00.00	57.96	608.72	596.77	592.28	591.59	591.98	590.93	17.80
306+50.00	58.76	608.22	597.69	592.97	590.91	591.32	590.24	17.98
306+30.00	58.32	608.02	598.00	592.74	590.63	591.10	589.96	18.06
306+27.73	58.24	608.00	598.03	592.68	590.59	591.07	589.93	18.07
306+00.00	56.83	608.00	598.40	591.90	590.19	590.77	589.52	18.48
305+59.36	53.26	608.00	598.82	590.39	589.59	590.15	588.93	19.07
305+59.31	53.26	608.00	598.82	590.39	589.59	590.15	588.93	19.07
305+50.00	53.46	608.00	598.90	590.29	589.38	589.98	588.72	19.28
305+30.00	53.91	608.00	599.07	590.07	588.93	589.55	588.26	19.74

Segment 2 SN 099-N1010

Station	Offset (Rt.) to Centerline Wall (ft)	Theoretical Top of NAW Elev.	℄ Houbolt Ramp B Profile Elev.	Finished Grade Elev. At Front Face of NAW	Finished Grade Elev. At Back Face of NAW	Existing Grade Elev. At Front Face of NAW	Theoretical Bottom of NAW Elev.	Theoretical Wall Height (ft)
307+00.00	17.54	609.00	596.87	595.97	593.47	594.81	592.80	16.20
306+97.83	16.96	609.00	597.75	596.96	594.46	595.79	593.79	15.21
306+47.83	15.39	609.00	598.46	597.71	595.21	596.84	594.54	14.46
306+27.73	14.88	609.00	598.76	598.02	595.52	597.21	594.86	14.14
306+25.81	14.80	608.98	598.92	598.21	595.71	597.47	595.05	13.94
305+75.81	14.33	608.72	599.25	598.51	596.01	598.16	595.34	13.38
305+71.75	14.01	608.44	599.48	598.74	596.24	599.01	595.57	12.87
305+25.81	14.01	608.22	599.71	599.02	597.02	599.42	596.36	11.87
305+27.73	14.01	608.00	599.94	599.32	597.32	599.67	596.65	11.35
305+11.00	14.01	607.50	600.17	599.62	597.62	599.96	596.95	10.55
304+61.00	14.01	606.00	600.36	599.86	597.86	600.23	597.19	8.81
304+11.00	14.01	605.67	599.48	598.74	596.24	599.01	595.57	10.09
304+36.31	14.01	605.26	599.54	598.80	596.30	599.19	595.64	9.62
304+27.73	14.01	605.00	599.58	598.84	596.81	599.27	596.14	8.86
304+26.86	14.01	605.00	599.59	598.86	596.86	599.28	596.20	8.80
303+76.86	14.01	605.00	599.71	599.02	597.02	599.42	596.36	8.64
303+26.86	14.00	605.00	599.94	599.32	597.32	599.67	596.65	8.35
303+27.73	14.00	605.00	600.04	599.45	597.45	599.79	596.79	8.21
302+77.73	14.00	605.00	600.17	599.62	597.62	599.96	596.95	8.05
302+60.00	14.00	605.00	600.36	599.86	597.86	600.23	597.19	7.81

MODEL: BL_PR_I80 • Plan 3 [Sheet]
FILE NAME: pw://transystems-pw.bentley.com:TRANSYSCORP-PW1-HOSTED/Documents/Projects_2018/CH401/401180022/02-TranSystems/CAD/62R27/Sheet/23-Structural/Noise Walls/D162R27-SHT-NAW13-STRUCT-4

HBM ENGINEERING GROUP, LLC

USER NAME = aditya.joshi	DESIGNED - PG	REVISED -
	DRAWN - PG	REVISED -
PLOT SCALE =	CHECKED - LAB, MAI	REVISED -
PLOT DATE = 8/11/2023	DATE - 6/26/23	REVISED -

STATE OF ILLINOIS
DEPARTMENT OF TRANSPORTATION

DATA TABLES, PROFILE GRADE, AND HORIZONTAL CURVE DATA
NOISE ABATEMENT WALL 13

SCALE: SHEET S3-4 OF S3-8 SHEETS STA. TO STA.

F.A.I. RTE.	SECTION	COUNTY	TOTAL SHEETS	SHEET NO.
I-80	FAI 80 21 STRUCTURE 6	WILL	898	620
		CONTRACT NO. 62R27		
	ILLINOIS	FED. AID PROJECT		

BORING LOG NAW13-01

Wang Engineering
wangeng@wangeng.com
1145 N. Main Street
Lombard, IL 60148
Telephone: 630-953-9928
Fax: 630-953-9938

WEI Job No.: 7901-15-01
Client: TranSystems Corporation
Project: I-80 Reconstruction (Houbolt Rd to Center St)
Location: Will County, Illinois

Datum: NAVD 88
Elevation: 584.03 ft
North: 1758002.20 ft
East: 1029722.08 ft
Station: 312+26.41
Offset: 29.957 RT

Elevation (ft)	SOIL AND ROCK DESCRIPTION	Depth (ft)	Sample Type / recovery	Sample No.	SPT Values (blw/6 in)	Qu (tsf)	Moisture Content (%)
	Brown SANDY GRAVEL; damp --FILL--						
583.0	Medium dense, brown SANDY GRAVEL; damp --RDR 2--			1	11 9 5	NP	6
581.0	Hard, gray to brown SILTY CLAY, trace gravel; damp --RDR 2-3--	5		2	3 6 8	4.18 B	18
	--silt seam--			3	13 10 21	4.50 P	20
576.0	Medium dense, brown, medium SAND, trace gravel; damp --RDR 3--	10		4	8 9 10	NP	7
573.5	Very dense, brown to gray SANDY GRAVEL; moist to wet --RDR 3--			5	23 37 48	NP	8
		15		6	15 29 22	NP	7
567.8	Hard, gray SILTY CLAY LOAM to SILTY LOAM, little gravel; damp --RDR 2--			7	29 46 31	> 4.50 P	9
566.0	Very dense, gray GRAVEL; damp --RDR 3--	20		8	50/5"	NP	2
563.5	Hard, gray SILTY CLAY LOAM to SILTY LOAM, trace gravel; damp --RDR 4--						
562.0	--AUGER REFUSAL-- Boring terminated at 22.00 ft			9	17 50/5"	> 4.50 P	9
		25					
		30					
		35					
		40					

GENERAL NOTES

Begin Drilling: 03-22-2023 Complete Drilling: 03-22-2023
Drilling Contractor: Wang Testing Services Drill Rig: 21D50A [84%]
Driller: KS&AP Logger: N. Karahalios Checked by: J. Bensen
Drilling Method: 2.25" IDA HSA; boring backfilled upon completion

WATER LEVEL DATA

While Drilling: 13.50 ft
At Completion of Drilling: DRY
Time After Drilling: NA
Depth to Water: NA

The stratification lines represent the approximate boundary between soil types; the actual transition may be gradual.

BORING LOG NAW13-02

Wang Engineering
wangeng@wangeng.com
1145 N. Main Street
Lombard, IL 60148
Telephone: 630-953-9928
Fax: 630-953-9938

WEI Job No.: 7901-15-01
Client: TranSystems Corporation
Project: I-80 Reconstruction (Houbolt Rd to Center St)
Location: Will County, Illinois

Datum: NAVD 88
Elevation: 585.35 ft
North: 1758099.39 ft
East: 1029866.81 ft
Station: 310+54.31
Offset: 57.785 RT

Elevation (ft)	SOIL AND ROCK DESCRIPTION	Depth (ft)	Sample Type / recovery	Sample No.	SPT Values (blw/6 in)	Qu (tsf)	Moisture Content (%)
584.7	8-inch thick, brown SILTY CLAY LOAM --FILL--						
	Medium dense, brown SANDY LOAM, trace gravel; damp			1	7 7 11	NP	13
582.3	Medium dense, brown SANDY GRAVEL; damp --RDR 4--	5		2	23 20 7	NP	8
579.8	Very stiff, brown SILTY CLAY, trace gravel; damp --RDR 3--			3	5 6 9	2.46 B	21
576.6	Brown SANDY GRAVEL; damp						
576.3	Medium stiff to very stiff, brown SILTY CLAY, trace gravel; damp --RDR 3--	10		4	19 10 6	3.00 P	23
573.3	Very dense, gray SILT; moist to wet --RDR 3--			5	4 3 4	0.98 B	18
570.7	Brown SANDY GRAVEL; wet --RDR 3--	15		6	3 32 48	NP	20
569.8	Very dense, brown Gravelly LOAM; moist --RDR 3-- --possible cobbles--			7	43 50/5"	NP	11
567.3	Brown SANDY GRAVEL; wet						
566.6	Hard, gray SILTY CLAY LOAM, trace gravel; damp --RDR 3--	20		8	25 17 9	> 4.50 P	13
	Boring terminated at 20.00 ft						
		25					
		30					
		35					
		40					

GENERAL NOTES

Begin Drilling: 03-06-2023 Complete Drilling: 03-07-2023
Drilling Contractor: Wang Testing Services Drill Rig: 21D50A [84%]
Driller: KS&AP Logger: N. Karahalios Checked by: J. Bensen
Drilling Method: 2.25" IDA HSA; boring backfilled upon completion

WATER LEVEL DATA

While Drilling: 13.00 ft
At Completion of Drilling: 18.00 ft
Time After Drilling: NA
Depth to Water: NA

The stratification lines represent the approximate boundary between soil types; the actual transition may be gradual.

BORING LOG NAW13-03

Wang Engineering
wangeng@wangeng.com
1145 N. Main Street
Lombard, IL 60148
Telephone: 630-953-9928
Fax: 630-953-9938

WEI Job No.: 7901-15-01
Client: TranSystems Corporation
Project: I-80 Reconstruction (Houbolt Rd to Center St)
Location: Will County, Illinois

Datum: NAVD 88
Elevation: 589.12 ft
North: 1758158.42 ft
East: 1030032.43 ft
Station: 308+79.17
Offset: 42.208 RT

Elevation (ft)	SOIL AND ROCK DESCRIPTION	Depth (ft)	Sample Type / recovery	Sample No.	SPT Values (blw/6 in)	Qu (tsf)	Moisture Content (%)
	Stiff, brown SILTY CLAY, some gravel; damp --FILL--						
587.6	Very dense, brown SANDY GRAVEL; damp --RDR 4--			1	13 48 50/3"	NP	5
		5		2	15 27 31	NP	4
583.6	Stiff, brown SILTY CLAY, trace gravel; damp --RDR 3--			3	12 15 18	1.50 P	17
581.1	Very dense, brown SANDY GRAVEL; damp --RDR 3--	10		4	42 50/5"	NP	4
670.6	Soft to stiff, brown to gray SILTY CLAY to CLAY, trace gravel; damp --RDR 2--			5	7 8 8	1.89 B	22
674.9	Loose to very dense, gray SILT; moist --RDR 2-3--	15		6	3 4 5	0.41 B	20
571.8	Brown SANDY LOAM; damp			7	3 10 50/5"	NP	20
571.1	Very dense, brown SANDY GRAVEL; damp --RDR 3--	20		8	50/5"	NP	4
570.2	Boring terminated at 18.90 ft						
		25					
		30					
		35					
		40					

GENERAL NOTES

Begin Drilling: 03-06-2023 Complete Drilling: 03-06-2023
Drilling Contractor: Wang Testing Services Drill Rig: 21D50A [84%]
Driller: KS&AP Logger: N. Karahalios Checked by: J. Bensen
Drilling Method: 2.25" IDA HSA; boring backfilled upon completion

WATER LEVEL DATA

While Drilling: DRY
At Completion of Drilling: DRY
Time After Drilling: NA
Depth to Water: NA

The stratification lines represent the approximate boundary between soil types; the actual transition may be gradual.

WANGENGINC 7901501.GPJ WANGENG.GDT 5/2/23

MODEL: BL_PR_I80 - Plan 3 [Sheet]
FILE NAME: pw://transystems-pw.bentley.com:transyscorp-pw1-hosted/Documents/Projects_2018/CH401/401180622/02-TranSystems/CAD/62R27/Sheets/23-Structural/Noise Walls/D162R27-SHT-NAW13-STRUCT-5

HBM ENGINEERING GROUP, LLC

USER NAME = lisa.buntin	DESIGNED - PG	REVISED -
	DRAWN - PG	REVISED -
PLOT SCALE =	CHECKED - LAB, MAI	REVISED -
PLOT DATE = 8/10/2023	DATE - 6/26/23	REVISED -

STATE OF ILLINOIS
DEPARTMENT OF TRANSPORTATION

SOIL BORINGS 1
NOISE ABATEMENT WALL 13

SCALE: SHEET S3-5 OF S3-8 SHEETS STA. TO STA.

F.A.I. RTE.	SECTION	COUNTY	TOTAL SHEETS	SHEET NO.
I-80	FAI 80 21 STRUCTURE 6	WILL	898	621
		CONTRACT NO. 62R27		
		ILLINOIS FED. AID PROJECT		

Wang Engineering
wangeng@wangeng.com
1145 N. Main Street
Lombard, IL 60148
Telephone: 630-953-9928
Fax: 630-953-9938

BORING LOG NAW13-04

WEI Job No.: 7901-15-01

Client: TranSystems Corporation
Project: I-80 Reconstruction (Houbolt Rd to Center St)
Location: Will County, Illinois

Datum: NAVD 88
Elevation: 592.11 ft
North: 1758245.70 ft
East: 1030170.77 ft
Station: 307+07.11
Offset: 50.819 RT

Elevation (ft)	SOIL AND ROCK DESCRIPTION	Sample No.	SPT Values (blw/6 in)	Qu (tsf)	Moisture Content (%)
	15-inch thick, dark brown SILTY CLAY LOAM --TOPSOIL--				
590.9	Very stiff, brown CLAY LOAM; damp --FILL--	1	7 12 15	3.00 P	33
589.1	--RDR 3-- Medium dense, brown SANDY GRAVEL; damp --RDR 2--	2	15 15 14	NP	5
586.6	Very stiff, brown SILTY CLAY, trace gravel; damp --RDR 2-3--	3	5 5 8	2.79 B	20
		4	6 7 11	3.94 B	20
581.6	Very dense, brown SANDY GRAVEL; damp --RDR 3-- --possible cobbles--	5	32 32 30	NP	4
579.1	Stiff to very stiff, brown to gray SILTY CLAY, trace gravel; damp	6	6 7 9	2.95 B	21
575.8	--Qu: 1.5P-- Loose, gray SILT; wet	7	2 3 3	NP	21
574.1	Very dense, brown and gray SANDY GRAVEL; damp	8	37 34 40	NP	3
572.1	Boring terminated at 20.00 ft				

GENERAL NOTES

Begin Drilling: 03-06-2023 Complete Drilling: 03-06-2023
Drilling Contractor: Wang Testing Services Drill Rig: 21D50A [84%]
Driller: KS&AP Logger: N. Karahalios Checked by: J. Bensen
Drilling Method: 2.25" IDA HSA; boring backfilled upon completion

WATER LEVEL DATA

While Drilling: 16.33 ft
At Completion of Drilling: DRY
Time After Drilling: NA
Depth to Water: NA
The stratification lines represent the approximate boundary between soil types; the actual transition may be gradual.

Wang Engineering
wangeng@wangeng.com
1145 N. Main Street
Lombard, IL 60148
Telephone: 630-953-9928
Fax: 630-953-9938

BORING LOG NAW13-05

WEI Job No.: 7901-15-01

Client: TranSystems Corporation
Project: I-80 Reconstruction (Houbolt Rd to Center St)
Location: Will County, Illinois

Datum: NAVD 88
Elevation: 590.06 ft
North: 1758344.18 ft
East: 1030291.88 ft
Station: 305+43.18
Offset: 47.439 RT

Elevation (ft)	SOIL AND ROCK DESCRIPTION	Sample No.	SPT Values (blw/6 in)	Qu (tsf)	Moisture Content (%)
	Stiff, brown SILTY CLAY, trace gravel; damp --FILL--				
588.6	Medium dense, brown SANDY LOAM, trace gravel; damp --FILL--	1	6 6 13	1.56 B	21
587.1	Medium dense to dense, brown SANDY GRAVEL: damp	2	16 14 17	NP	7
		3	22 22 17	NP	3
		4	10 10 7	NP	7
		5	11 15 18	NP	5
577.1	Very stiff, brown CLAY to SILTY CLAY, trace gravel; damp	6	4 6 4	2.50 P	24
574.6	Medium dense, gray SILT; damp	7	4 6 23	NP	22
573.2	Very stiff (2.00P), brown SILTY CLAY; damp				
572.1	Medium dense, brown SANDY GRAVEL; wet	8	50/3"	NR	

Elevation (ft)	SOIL AND ROCK DESCRIPTION	Sample No.	SPT Values (blw/6 in)	Qu (tsf)	Moisture Content (%)
		9	1 16 10	NP	9
567.6	Boring terminated at 22.50 ft				

GENERAL NOTES

Begin Drilling: 03-06-2023 Complete Drilling: 03-06-2023
Drilling Contractor: Wang Testing Services Drill Rig: 21D50A [84%]
Driller: KS&AP Logger: N. Karahalios Checked by: J. Bensen
Drilling Method: 2.25" IDA HSA; boring backfilled upon completion

WATER LEVEL DATA

While Drilling: 21.00 ft
At Completion of Drilling: DRY
Time After Drilling: NA
Depth to Water: NA
The stratification lines represent the approximate boundary between soil types; the actual transition may be gradual.

Wang Engineering
wangeng@wangeng.com
1145 N. Main Street
Lombard, IL 60148
Telephone: 630-953-9928
Fax: 630-953-9938

BORING LOG NAW13-06

WEI Job No.: 7901-15-01

Client: TranSystems Corporation
Project: I-80 Reconstruction (Houbolt Rd to Center St)
Location: Will County, Illinois

Datum: NAVD 88
Elevation: 594.20 ft
North: 1758218.22 ft
East: 1030186.74 ft
Station: 307+09.85
Offset: 19.149 RT

Elevation (ft)	SOIL AND ROCK DESCRIPTION	Sample No.	SPT Values (blw/6 in)	Qu (tsf)	Moisture Content (%)
	Stiff to very stiff, black, dark brown and brown CLAY LOAM; trace gravel; damp --FILL-- --RDR 2--	1	3 2 8	1.50 P	23
588.7		2	3 5 11	2.95 B	32
587.9	Brown SANDY LOAM, trace gravel; damp --FILL--	3	8 15 17	NP	6
586.2	Dense, brown SANDY GRAVEL; damp --RDR 3-- Very stiff to hard, brown and gray SILTY CLAY, trace gravel; damp --RDR 2--	4	4 5 8	3.77 B	19
		5	8 9 12	6.56 B	18
581.2	Stiff to very stiff, brown to gray CLAY to SILTY CLAY, trace gravel; damp --RDR 2--	6	5 6 14	1.64 B	25
		7	6 6 9	3.85 B	23
576.2	Loose, gray SILT; moist to wet --RDR 2--	8	4 4 4	NP	20
574.2	Boring terminated at 20.00 ft				

GENERAL NOTES

Begin Drilling: 03-06-2023 Complete Drilling: 03-06-2023
Drilling Contractor: Wang Testing Services Drill Rig: 21D50A [84%]
Driller: KS&AP Logger: N. Karahalios Checked by: J. Bensen
Drilling Method: 2.25" IDA HSA; boring backfilled upon completion

WATER LEVEL DATA

While Drilling: 20.00 ft
At Completion of Drilling: 20.00 ft
Time After Drilling: NA
Depth to Water: NA
The stratification lines represent the approximate boundary between soil types; the actual transition may be gradual.

HBM ENGINEERING GROUP, LLC

USER NAME = lisa.buntin	DESIGNED - PG	REVISED -	
	DRAWN - PG	REVISED -	
PLOT SCALE =	CHECKED - LAB, MAI	REVISED -	
PLOT DATE = 8/10/2023	DATE - 6/26/23	REVISED -	

STATE OF ILLINOIS
DEPARTMENT OF TRANSPORTATION

SOIL BORINGS 2
NOISE ABATEMENT WALL 13

SCALE: SHEET S3-6 OF S3-8 SHEETS STA. TO STA.

F.A.I. RTE.	SECTION	COUNTY	TOTAL SHEETS	SHEET NO.
I-80	FAI 80 21 STRUCTURE 6	WILL	898	622
		CONTRACT NO. 62R27		
	ILLINOIS	FED. AID PROJECT		

BORING LOG NAW13-07

Page 1 of 1

Wang Engineering
wangeng@wangeng.com
1145 N. Main Street
Lombard, IL 60148
Telephone: 630-953-9928
Fax: 630-953-9938

WEI Job No.: 7901-15-01
Client: TranSystems Corporation
Project: I-80 Reconstruction (Houbolt Rd to Center St)
Location: Will County, Illinois

Datum: NAVD 88
Elevation: 599.40 ft
North: 1758350.28 ft
East: 1030359.09 ft
Station: 304+90.51
Offset: 5.255 RT

Elevation (ft)	SOIL AND ROCK DESCRIPTION	Depth (ft)	Sample Type / recovery	Sample No.	SPT Values (blw/6 in)	Qu (tsf)	Moisture Content (%)
599.9	6-inch thick ASPHALT --PAVEMENT--						
599.4	6-inch thick CRUSHED STONE --BASE COURSE--						
	Medium stiff to very stiff, brown CLAY LOAM, trace to some gravel; damp --FILL-- --RDR 2-3--			1	10 8 7	0.82 B	15
		5		2	5 9 10	2.52 B	21
				3	7 7 12	2.52 B	23
	--L_L(%)=48, P_L(%)=19-- --%Gravel=11.3-- --%Sand=30.0-- --%Silt=34.5-- --%Clay=24.2-- --A-7-6 (14)--	10		4	6 5 15	1.48 B	26
				5	4 5 6	3.50 P	33
586.4	Dense, brown SANDY GRAVEL; damp --RDR 3--	15		6	19 21 18	NP	8
				7	13 13 20	NP	4
579.4		20		8	19 18 13	NP	7
	Boring terminated at 20.00 ft						

GENERAL NOTES

Begin Drilling: 03-06-2023 Complete Drilling: 03-06-2023
Drilling Contractor: Wang Testing Services Drill Rig: 21D50A [84%]
Driller: KS&AP Logger: N. Karahalios Checked by: J. Bensen
Drilling Method: 2.25" IDA HSA; boring backfilled upon completion

WATER LEVEL DATA

While Drilling: DRY
At Completion of Drilling: DRY
Time After Drilling: NA
Depth to Water: NA

The stratification lines represent the approximate boundary between soil types; the actual transition may be gradual.

WANGENGINC 7901150 1.GPJ WANGENG.GDT 5/2/23

BORING LOG NAW13-08

Page 1 of 1

Wang Engineering
wangeng@wangeng.com
1145 N. Main Street
Lombard, IL 60148
Telephone: 630-953-9928
Fax: 630-953-9938

WEI Job No.: 7901-15-01
Client: TranSystems Corporation
Project: I-80 Reconstruction (Houbolt Rd to Center St)
Location: Will County, Illinois

Datum: NAVD 88
Elevation: 600.36 ft
North: 1758500.00 ft
East: 1030512.16 ft
Station: 302+71.78
Offset: 11.873 RT

Elevation (ft)	SOIL AND ROCK DESCRIPTION	Depth (ft)	Sample Type / recovery	Sample No.	SPT Values (blw/6 in)	Qu (tsf)	Moisture Content (%)
599.9	6-inch thick, dark brown SILTY CLAY LOAM --TOPSOIL--						
	Stiff, brown SILTY CLAY, trace gravel; damp --FILL-- --RDR 2--			1	8 4 7	1.50 P	10
596.4	Dense, brown SANDY GRAVEL; damp --FILL--	5		2	13 27 17	NP	5
594.9	Stiff to hard, brown and gray CLAY LOAM, trace gravel; damp --FILL-- --RDR 2--			3	6 7 10	1.50 P	20
		10		4	5 4 9	1.50 P	23
				5	6 6 6	2.21 B	24
		15		6	5 6 12	4.50 P	25
584.9	Hard, black SILTY CLAY, trace gravel; damp --Buried TOPSOIL-- --RDR 2--			7	8 8 11	4.00 P	34
582.4	Very stiff, brown SILTY CLAY, trace gravel; damp --RDR 2--			8	6 7 7	2.95 B	20
580.4		20					
	Boring terminated at 20.00 ft						

GENERAL NOTES

Begin Drilling: 03-02-2023 Complete Drilling: 03-02-2023
Drilling Contractor: Wang Testing Services Drill Rig: 21D50A [84%]
Driller: KS&AP Logger: N. Karahalios Checked by: J. Bensen
Drilling Method: 2.25" IDA HSA; boring backfilled upon completion

WATER LEVEL DATA

While Drilling: DRY
At Completion of Drilling: DRY
Time After Drilling: NA
Depth to Water: NA

The stratification lines represent the approximate boundary between soil types; the actual transition may be gradual.

WANGENGINC 7901150 1.GPJ WANGENG.GDT 5/2/23

NOTES:
1. EACH SIDE OF THE NOISE WALL PANELS SHALL HAVE A ROLLED ASHLAR STONE FINISH. THE FINISH SHALL HAVE A 1 ½" RELIEF FOR NOISE ABATEMENT WALL, GROUND MOUNTED AND A ¾" RELIEF FOR NOISE ABATEMENT WALL, STRUCTURE MOUNTED. THE COLOR OF BOTH SIDES OF THE PANELS, PLAIN BAND, POSTS AND ALL OTHER VISIBLE ELEMENTS SHALL FOLLOW THE SPECIAL PROVISIONS.

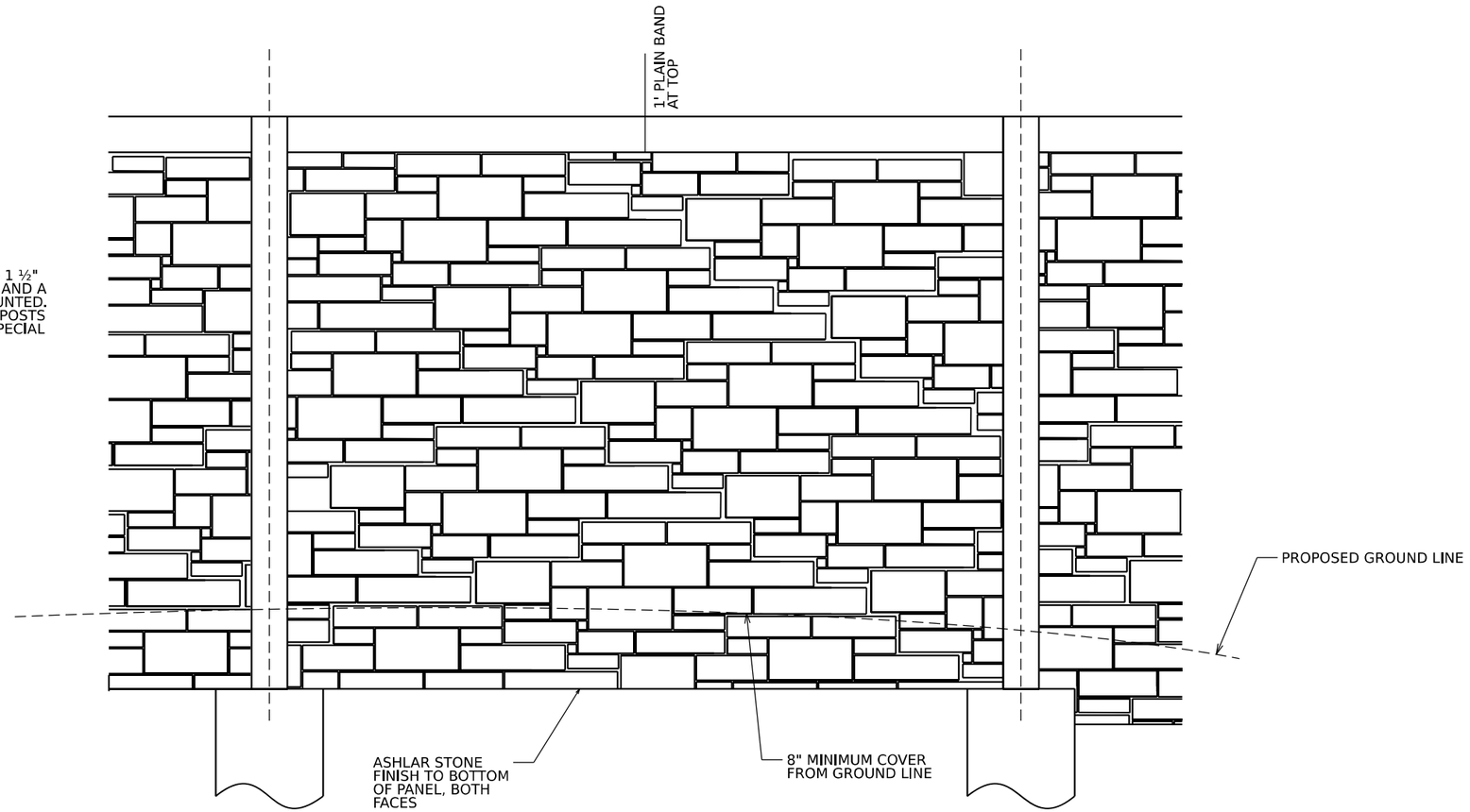

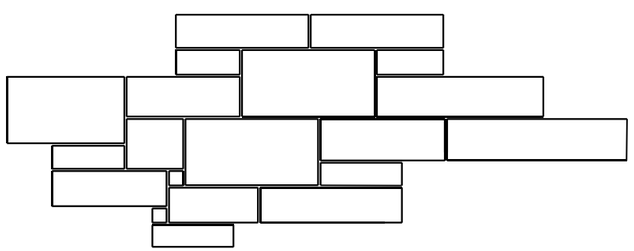

STONE PATTERN SIZES:
3" x 3" - 14" x 28"

ENLARGED PATTERN DETAIL

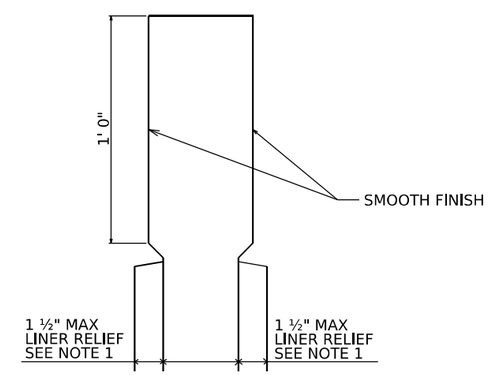

ENLARGED CAP DETAIL

MODEL: NOISE WALLS DETAILS
FILE NAME: pw://transystems-pw.bentley.com:transyscorp-pw1-hosted/Documents/Projects_2018/CH401/401180022/02-TranSystems/CAD/62R27/Sheets/23-Noise Abatement Walls/Noise Walls Details

TRANSYSTEMS	USER NAME = lisa.buntin	DESIGNED - VLJ	REVISED -	STATE OF ILLINOIS DEPARTMENT OF TRANSPORTATION	ASHLAR STONE FINISH NOISE ABATEMENT WALL 13			F.A.I. RTE.	SECTION	COUNTY	TOTAL SHEETS	SHEET NO.
		DRAWN - AMK	REVISED -					I-80	FAI 80 21 STRUCTURE 6	WILL	898	623A
	PLOT SCALE =	CHECKED - JMG	REVISED -							CONTRACT NO. 62R27		
	PLOT DATE = 8/10/2023	DATE - 6/26/23	REVISED -		SCALE: NONE	SHEET S3-8 OF S3-8 SHEETS	STA. TO STA.		ILLINOIS	FED. AID PROJECT		

Benchmark: Cut cross on top of northerly foundation bolt of the first light pole west of the gore at I-80 west bound and I-80 off ramp to houbolt road, south of the ramp, on the north side of westbound I-80 at Station 451+72.29, Offset 110.05' Lt., Elev. 595.744. See Alignment, Tie and Benchmark Sheets.

Existing Structure: None.

Proposed Structure: The proposed noise abatement wall consists of a structure mounted noise abatement wall with a length of 506'-4" and ground mounted noise abatement walls with a total length of 5,476'-5 1/8" and a maximum height of appoximately 24'-0" measured from top of anchorage slab or proposed grade to top of noise wall.

Salvage: None.

NOTES:

1. For General Notes, Index of Sheets, General Details and Bill of Materials, See Sheet S4-10
2. Under no circumstances should truck beds be raised underneath ComEd transmission lines.
3. Stations are measured along and offests are measured to PR ℄ I-80.
4. Length of a ground mounted wall is measured along centerline of the noise wall.

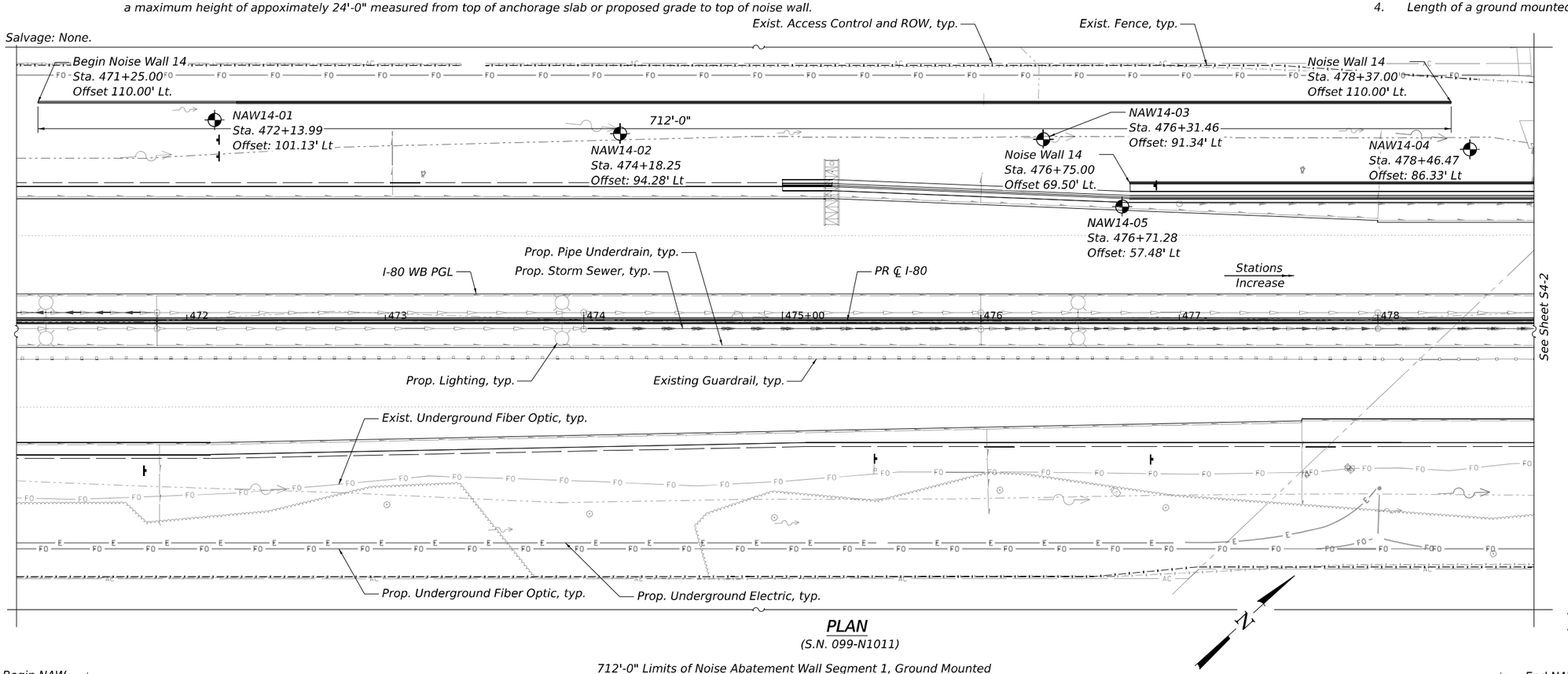

PLAN

(S.N. 099-N1011)

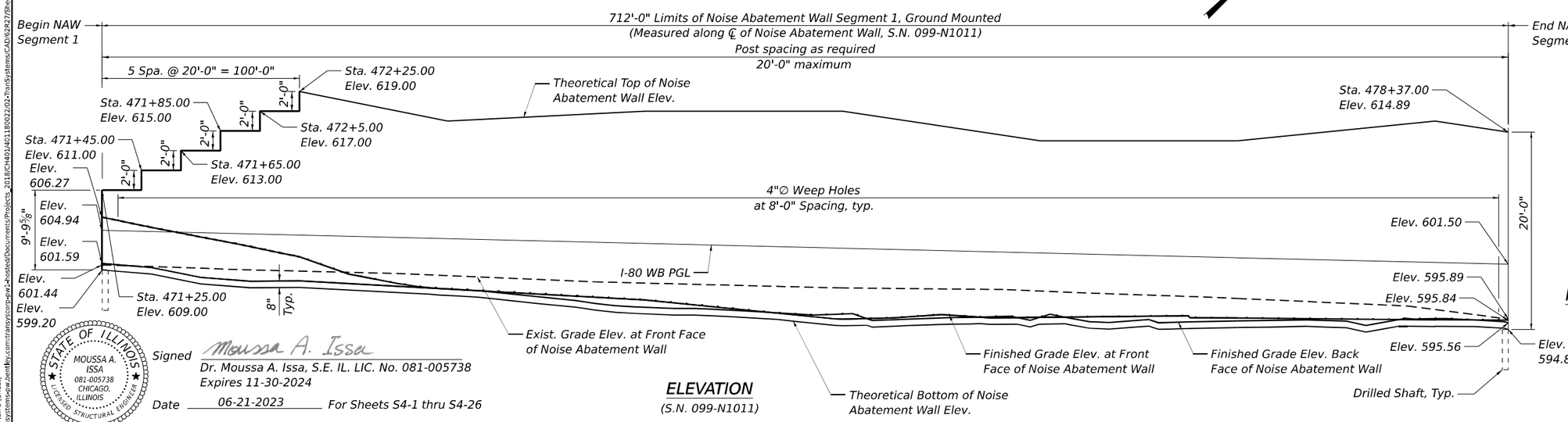

ELEVATION

(S.N. 099-N1011)

LEGEND:

- Exist. Underground Telephone
- Exist. Underground Electric
- Prop. Underground Electric
- Prop. Lighting Cable
- Exist. Underground Gas
- Exist. Aerial Line
- Exist. Underground Fiber Optic
- Prop. Underground Fiber Optic
- Exist. Underground Cable
- Exist. Pipe Underdrain
- Prop. Pipe Underdrain
- Exist. Storm Sewer
- Prop. Storm Sewer
- Prop. Guardrail
- Exist. Guardrail
- Exist. Fence
- Exist. Access Control & ROW
- Exist. Cable Barrier
- Exist. Lighting.
- Prop. Lighting
- Prop. Drainage
- Prop. Concrete Headwall
- Soil Boring

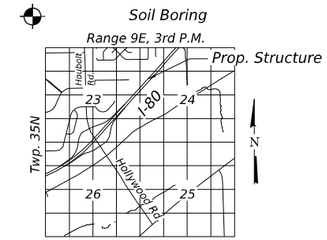

LOCATION SKETCH

GENERAL PLAN AND ELEVATION
NOISE ABATEMENT WALL ALONG I-80
F.A.I RTE. I-80
SEC. FAI 80 21 STRUCTURE 6
WILL COUNTY
STA. 471+25.00 TO STA. 519+00.00
SN 099-N1011 THRU SN 099-N1015
(NOISE WALL 14)

STATE OF ILLINOIS
MOUSSA A. ISSA
081-005738
CHICAGO, ILLINOIS
LICENSED STRUCTURAL ENGINEER

Signed Moussa A. Issa
Dr. Moussa A. Issa, S.E. IL. LIC. No. 081-005738
Expires 11-30-2024
Date 06-21-2023 For Sheets S4-1 thru S4-26

HBM ENGINEERING GROUP, LLC

USER NAME = lisa.buntin	DESIGNED - PG	REVISED -	
	DRAWN - PG, AS	REVISED -	
PLOT SCALE =	CHECKED - LAB, MAI	REVISED -	
PLOT DATE = 8/10/2023	DATE - 6/26/23	REVISED -	

STATE OF ILLINOIS
DEPARTMENT OF TRANSPORTATION

GENERAL PLAN AND ELEVATION 1
NOISE ABATEMENT WALL 14 – SN 099–N1011

SCALE: SHEET S4-1 OF S4-27 SHEETS STA. TO STA.

F.A.I. RTE.	SECTION	COUNTY	TOTAL SHEETS	SHEET NO.
I-80	FAI 80 21 STRUCTURE 6	WILL	898	624
		CONTRACT NO. 62R27		
		ILLINOIS	FED. AID PROJECT	

MODEL: BL_PR_I80 - Plan 3 [Sheet]
FILE NAME: pw://transystems-pw.bentley.com:transyscorp-pw1-hosted/Documents/Projects_2018/CH401/401180022/02-TranSystems/CAD/62R27/Sheets/23-Structural/Noise Walls/D162R27-SHT-NAW14-STRUCT-1

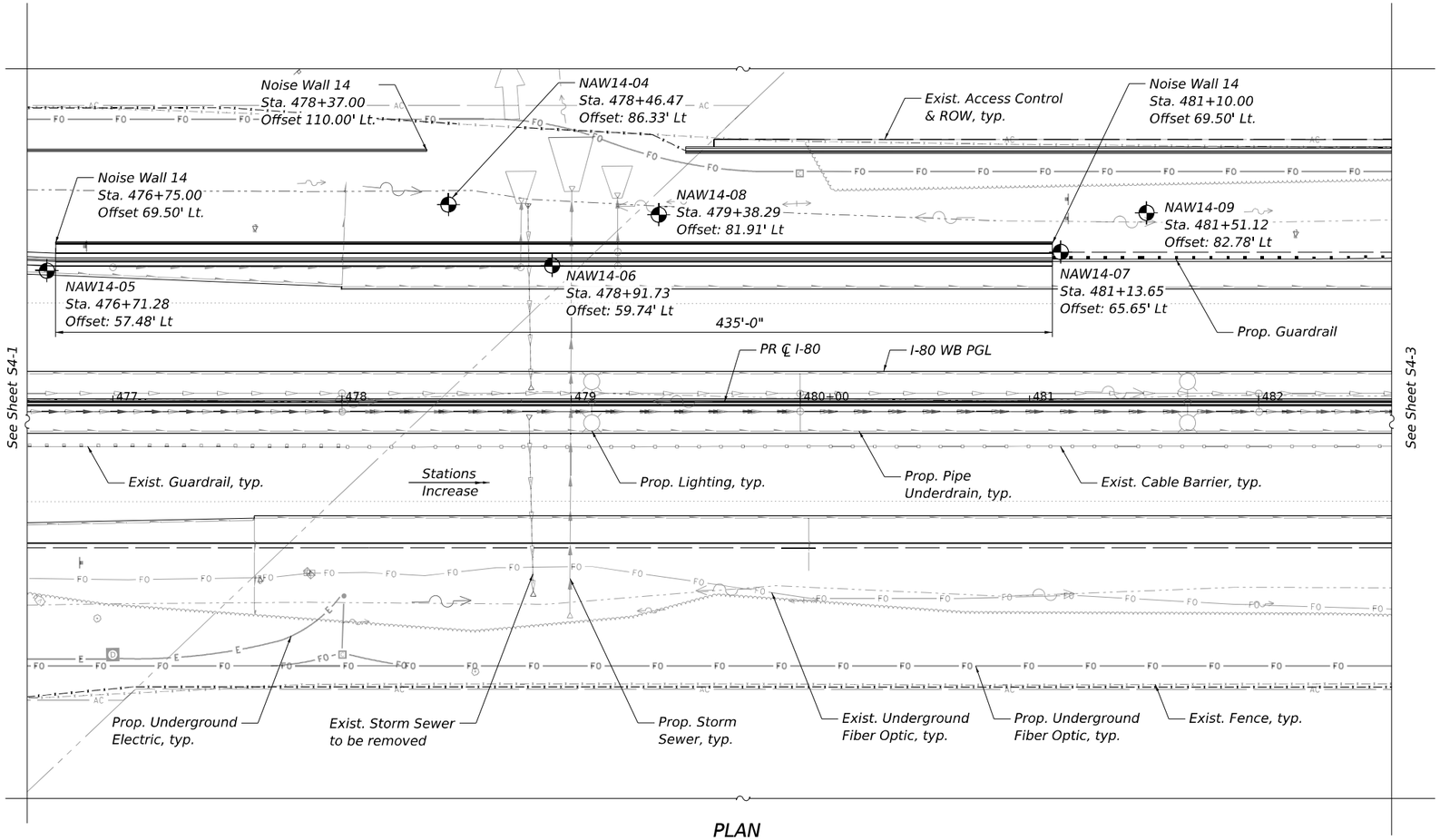

PLAN

(S.N. 099-N1012)

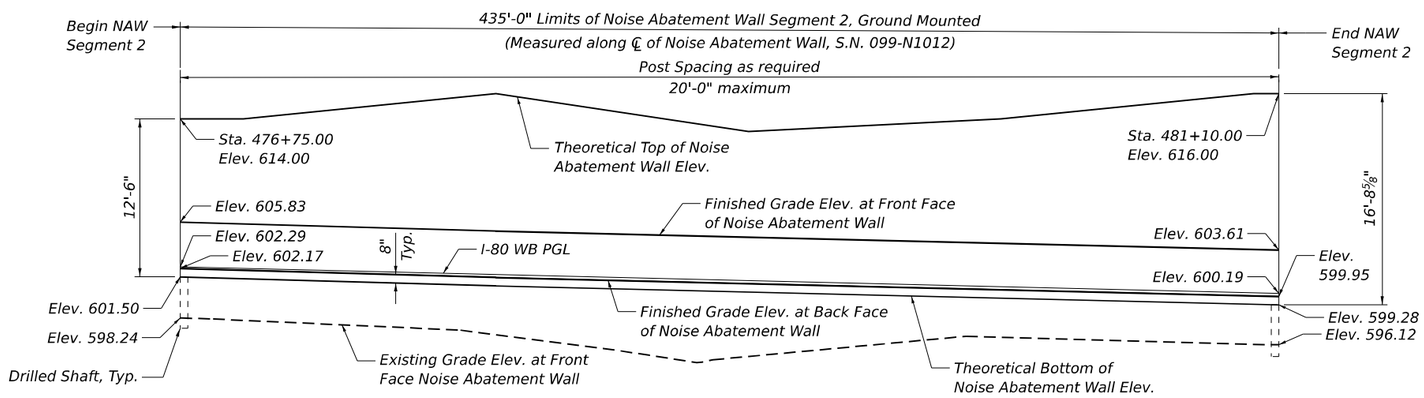

ELEVATION

(S.N. 099-N1012)

LEGEND:

- Exist. Underground Telephone
- Exist. Underground Electric
- Prop. Underground Electric
- Prop. Lighting Cable
- Exist. Underground Gas
- Exist. Aerial Line
- Exist. Underground Fiber Optic
- Prop. Underground Fiber Optic
- Exist. Underground Cable
- Exist. Pipe Underdrain
- Prop. Pipe Underdrain
- Exist. Storm Sewer
- Prop. Storm Sewer
- Prop. Guardrail
- Exist. Guardrail
- Exist. Fence
- Exist. Access Control & ROW
- Exist. Cable Barrier
- Exist. Lighting.
- Prop. Lighting
- Prop. Drainage
- Prop. Concrete Headwall
- Soil Boring

UTILITY CROSSING

Utility	Size Ø	Station	Offset (Lt)	Inv. Elev. (Ft)
Exist. Storm Sewer	24"	478+81.47	68.93	-
Prop. Storm Sewer	24"	479+00.18	69.08	594.09
Prop. Storm Sewer	15"	479+20.39	69.00	594.45
Prop. Pipe Underdrain	-	478+00.81	69.00	-
Prop. Storm Sewer	15"	478+78.06	69.00	595.16
Prop. Storm Sewer	12"	474+99.88	109.71	596.63
Prop. Storm Sewer	12"	486+99.80	109.66	595.77
Prop. Storm Sewer	12"	489+39.85	109.61	591.45
Prop. Storm Sewer	12"	496+99.78	108.45	586.84
Prop. Storm Sewer	12"	498+99.80	108.40	587.93
Prop. Storm Sewer	12"	501+99.96	108.39	589.18
Prop. Storm Sewer	12"	504+00.01	108.46	590.26
Prop. Storm Sewer	12"	506+00.11	109.53	591.15
Prop. Storm Sewer	12"	508+00.10	109.59	591.75
Prop. Storm Sewer	12"	510+00.15	109.65	592.61
Prop. Storm Sewer	12"	511+99.96	109.71	594.14
Prop. Storm Sewer	12"	515+40.01	109.80	595.45
Prop. Storm Sewer	12"	516+99.97	108.83	595.45

NOTES:

1. For General Notes, Index of Sheets, General Details and Total Bill of Material, see Sheet S4-10
2. Stations are measured along and offsets are measured to PR ℄ I-80.

MODEL: BL_PR_I80 - Plan 3 [Sheet]
FILE NAME: pw://transystems-pw.bentley.com:transyscorp-pw1-hosted/Documents/Projects_2018/CH401/401180022/02-TransSystems/CAD/62R27/Sheets/23-Structural/Noise Walls/D162R27-SHT-NAW14-STRUCT-2

HBM ENGINEERING GROUP, LLC

USER NAME = lisa.buntin	DESIGNED - PG	REVISED -	
	DRAWN - PG, AS	REVISED -	
PLOT SCALE =	CHECKED - LAB, MAI	REVISED -	
PLOT DATE = 8/10/2023	DATE - 6/26/23	REVISED -	

STATE OF ILLINOIS
DEPARTMENT OF TRANSPORTATION

GENERAL PLAN AND ELEVATION 2
NOISE ABATEMENT WALL 14 – SN 099–N1012

SCALE: | SHEET S4-2 OF S4-27 SHEETS | STA. | TO STA.

F.A.I. RTE.	SECTION	COUNTY	TOTAL SHEETS	SHEET NO.
I-80	FAI 80 21 STRUCTURE 6	WILL	898	625

CONTRACT NO. 62R27
ILLINOIS | FED. AID PROJECT

NOTES:

1. For General Notes, Index of Sheets, General Details and Total Bill of Material, see Sheet S4-10
2. Stations are measured along and offsets are measured to PR ℄ I-80.

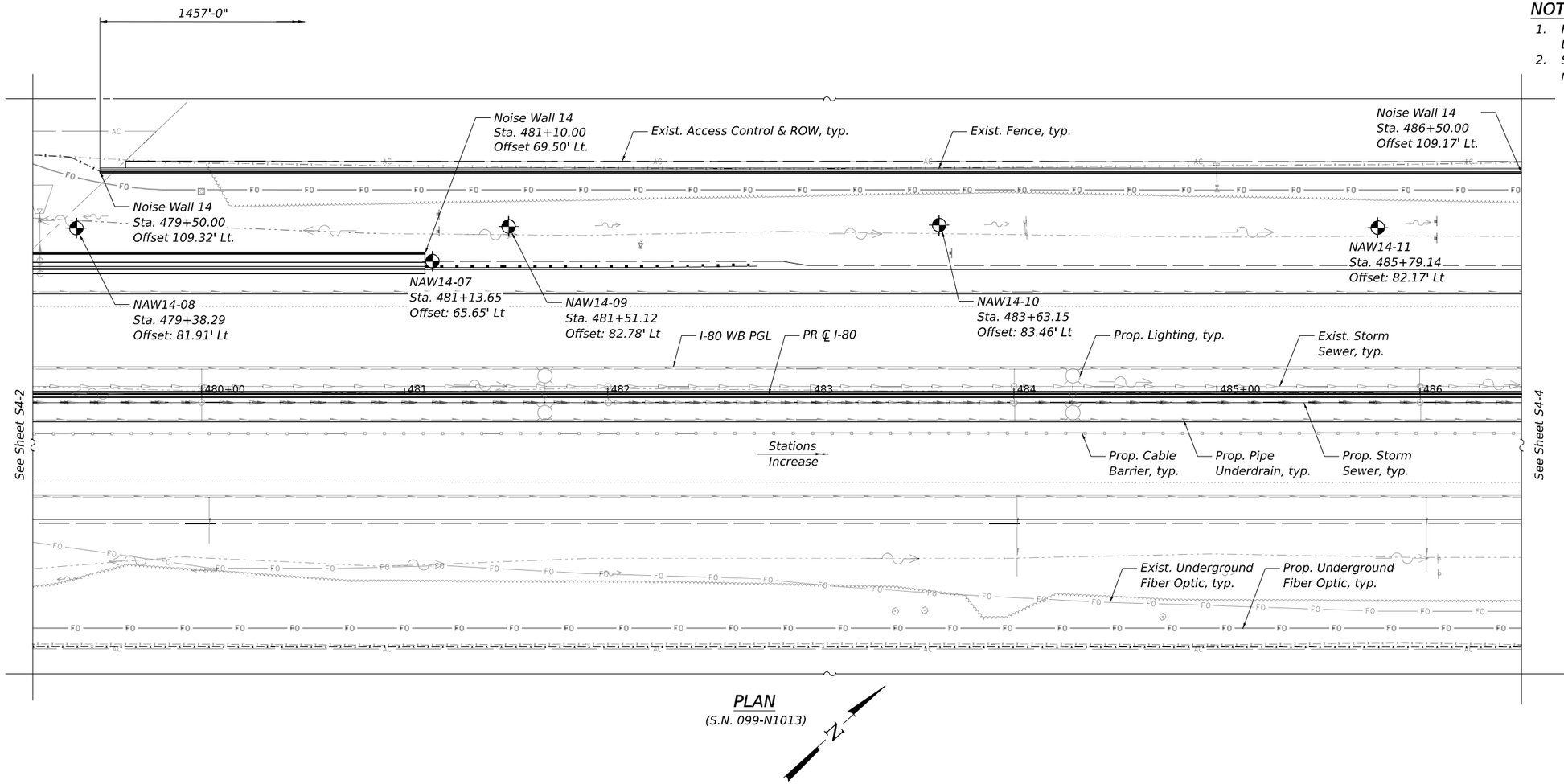

PLAN

(S.N. 099-N1013)

LEGEND:

- Exist. Underground Telephone
- Exist. Underground Electric
- Prop. Underground Electric
- Prop. Lighting Cable
- Exist. Underground Gas
- Exist. Aerial Line
- Exist. Underground Fiber Optic
- Prop. Underground Fiber Optic
- Exist. Underground Cable
- Exist. Pipe Underdrain
- Prop. Pipe Underdrain
- Exist. Storm Sewer
- Prop. Storm Sewer
- Prop. Guardrail
- Exist. Guardrail
- Exist. Fence
- Exist. Access Control & ROW
- Exist. Cable Barrier
- Exist. Lighting.
- Prop. Lighting
- Prop. Drainage
- Prop. Concrete Headwall
- Soil Boring

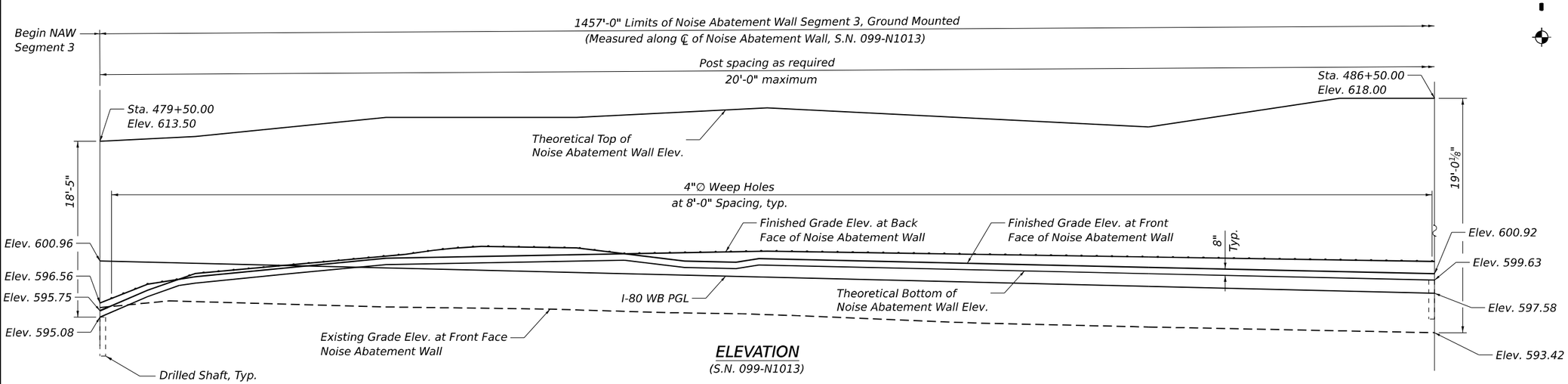

ELEVATION

(S.N. 099-N1013)

MODEL: BL_PR_I80 + Plan 3 [Sheet]
FILE NAME: pw://transystems-pw.bentley.com:transyscom-pw1-hosted/Documents/Projects_2019/CH401/401180022/02-Trans Systems/CAD/62R27/Sheets/23-Structural/Noise Walls/D162R27-SHT-NAW14-STRUCT-3

HBM ENGINEERING GROUP, LLC	USER NAME = lisa.buntin	DESIGNED - PG	REVISED -	STATE OF ILLINOIS DEPARTMENT OF TRANSPORTATION	GENERAL PLAN AND ELEVATION 3 NOISE ABATEMENT WALL 14 – SN 099–N1013	F.A.I. RTE.	SECTION	COUNTY	TOTAL SHEETS	SHEET NO.
		DRAWN - PG, AS	REVISED -			I-80	FAI 80 21 STRUCTURE 6	WILL	898	626
	PLOT SCALE =	CHECKED - LAB, MAI	REVISED -					CONTRACT NO. 62R27		
	PLOT DATE = 8/10/2023	DATE - 6/26/23	REVISED -		SCALE: SHEET S4-3 OF S4-27 SHEETS STA. TO STA.		ILLINOIS	FED. AID PROJECT		

NOTES:

1. For General Notes, Index of Sheets, General Details and Total Bill of Material, see Sheet S4-10
2. Stations are measured along and offsets are measured to PR ℄ I-80.

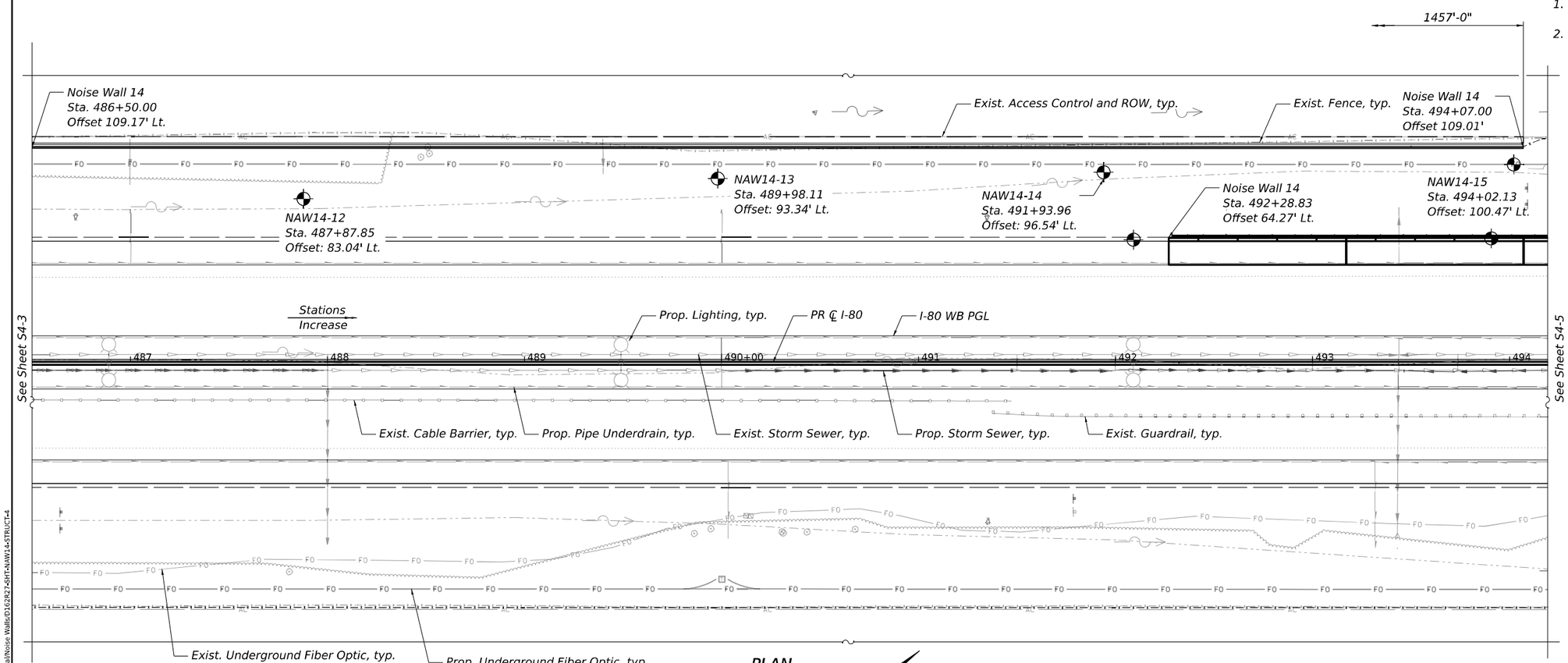

PLAN

(S.N. 099-N1013)

LEGEND:

- Exist. Underground Telephone
- Exist. Underground Electric
- Prop. Underground Electric
- Prop. Lighting Cable
- Exist. Underground Gas
- Exist. Aerial Line
- Exist. Underground Fiber Optic
- Prop. Underground Fiber Optic
- Exist. Underground Cable
- Exist. Pipe Underdrain
- Prop. Pipe Underdrain
- Exist. Storm Sewer
- Prop. Storm Sewer
- Prop. Guardrail
- Exist. Guardrail
- Exist. Fence
- Exist. Access Control & ROW
- Exist. Cable Barrier
- Exist. Lighting.
- Prop. Lighting
- Prop. Drainage
- Prop. Concrete Headwall
- Soil Boring

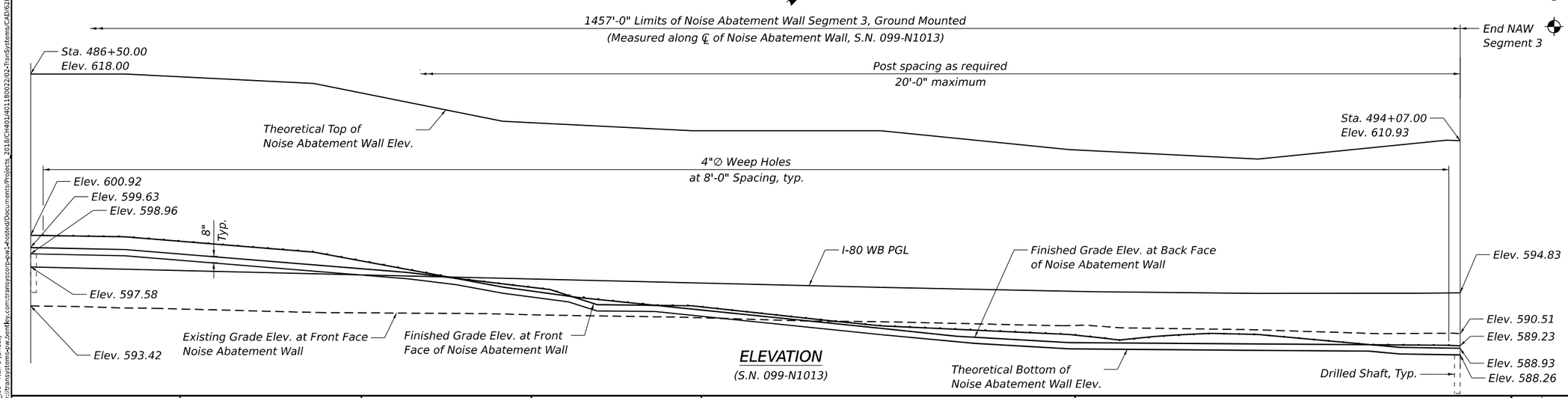

ELEVATION

(S.N. 099-N1013)

MODEL: BL_PR_I80 • Plan 3 [Sheet]
FILE NAME: pw://transystems-pw.bentley.com:transyscom-pw1-hosted/Documents/Projects_2018/CH401/401180022/02-TranSystems/CAD/62R27/Sheets/23-Structural/Noise Walls/D162R27-SHT-NAW14-STRUCT-4

HBM ENGINEERING GROUP, LLC	USER NAME = lisa.buntin	DESIGNED - PG	REVISED -	STATE OF ILLINOIS DEPARTMENT OF TRANSPORTATION	GENERAL PLAN AND ELEVATION 4 NOISE ABATEMENT WALL 14 – SN 099–N1013	F.A.I. RTE.	SECTION	COUNTY	TOTAL SHEETS	SHEET NO.
		DRAWN - PG, AS	REVISED -			I-80	FAI 80 21 STRUCTURE 6	WILL	898	627
	PLOT SCALE =	CHECKED - LAB, MAI	REVISED -					CONTRACT NO. 62R27		
	PLOT DATE = 8/10/2023	DATE - 6/26/23	REVISED -		SCALE: SHEET S4-4 OF S4-27 SHEETS STA. TO STA.		ILLINOIS	FED. AID PROJECT		

NOTES:

1. For General Notes, Index of Sheets, General Details and Total Bill of Material, see Sheet S4-10
2. Stations are measured along and offsets are measured to PR ℄ I-80.

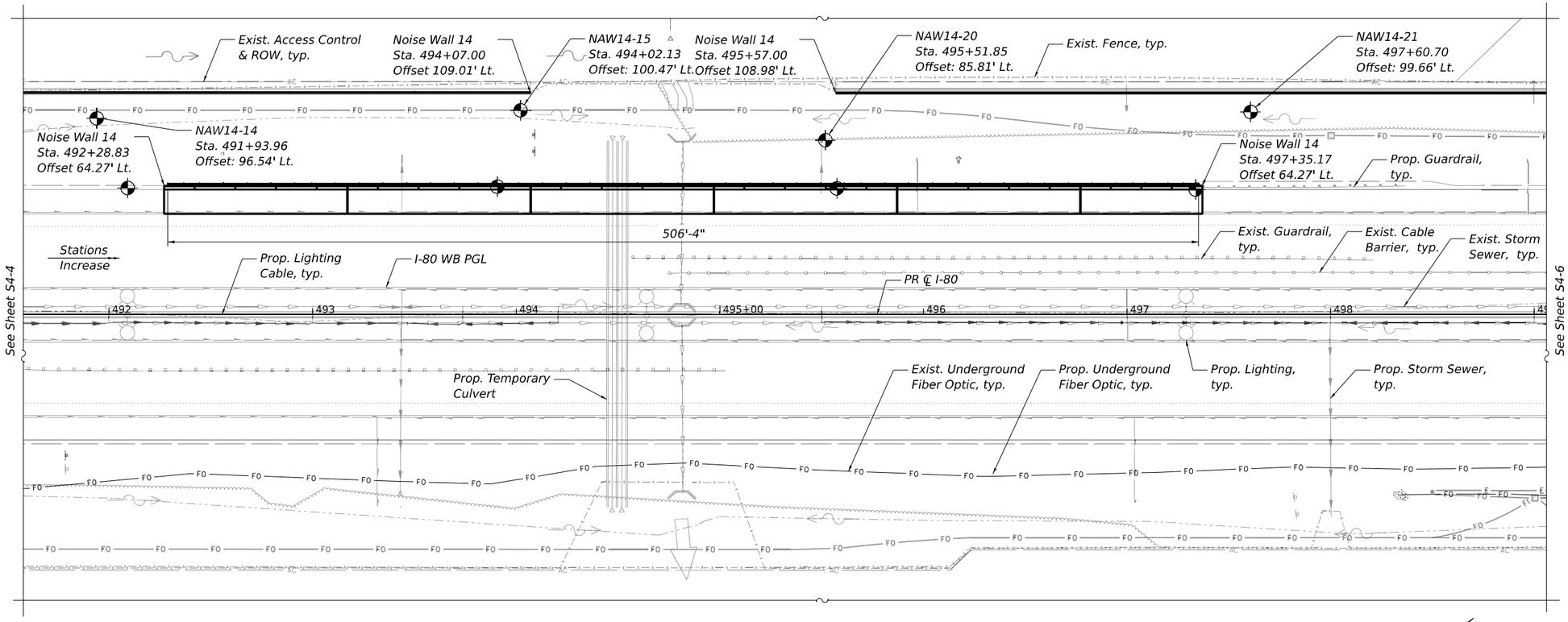

PLAN

(S.N. 099-N1014)

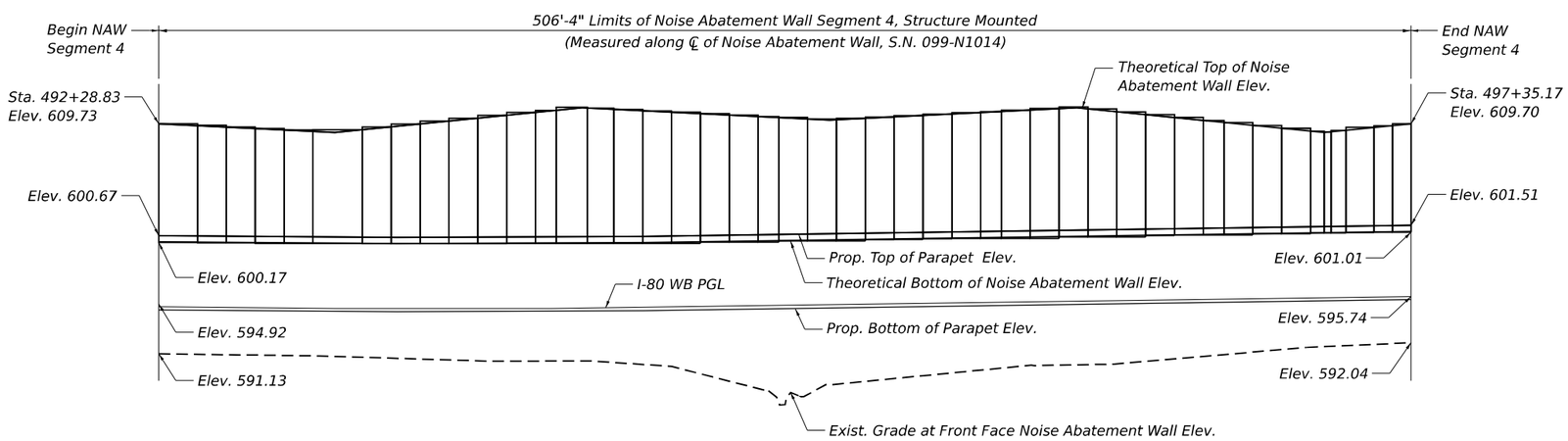

ELEVATION

(S.N. 099-N1014)

LEGEND:

- Exist. Underground Telephone
- Exist. Underground Electric
- Prop. Underground Electric
- Prop. Lighting Cable
- Exist. Underground Gas
- Exist. Aerial Line
- Exist. Underground Fiber Optic
- Prop. Underground Fiber Optic
- Exist. Underground Cable
- Exist. Pipe Underdrain
- Prop. Pipe Underdrain
- Exist. Storm Sewer
- Prop. Storm Sewer
- Prop. Guardrail
- Exist. Guardrail
- Exist. Fence
- Exist. Access Control & ROW
- Exist. Cable Barrier
- Exist. Lighting.
- Prop. Lighting
- Prop. Drainage
- Prop. Concrete Headwall
- Soil Boring

MODEL: BL_PR_I80 - Plan 3 [Sheet]
FILE NAME: pw://transystems-pw.bentley.com:transyscorp-pw1-hosted/Documents/Projects_2018/CH401/401180022/02-TranSystems/CAD/62R27/Sheets/23-Structural/Noise Walls/D162R27-SHT-NAW14-STRUCT-5

HBM ENGINEERING GROUP, LLC

USER NAME = lisa.buntin	DESIGNED - PG	REVISED -	
	DRAWN - PG, AS	REVISED -	
PLOT SCALE =	CHECKED - LAB, MAI	REVISED -	
PLOT DATE = 8/10/2023	DATE - 6/26/23	REVISED -	

STATE OF ILLINOIS
DEPARTMENT OF TRANSPORTATION

GENERAL PLAN AND ELEVATION 5
NOISE ABATEMENT WALL 14 – SN 099–N1014

SCALE: | SHEET S4-5 OF S4-27 SHEETS | STA. TO STA.

F.A.I. RTE.	SECTION	COUNTY	TOTAL SHEETS	SHEET NO.
I-80	FAI 80 21 STRUCTURE 6	WILL	898	628
		CONTRACT NO. 62R27		
		ILLINOIS FED. AID PROJECT		

NOTES:

For General Notes, Index of Sheets, General Details and Total Bill of Material, see Sheet S4-10
Stations are measured along and offsets are measured to PR ℄ I-80.

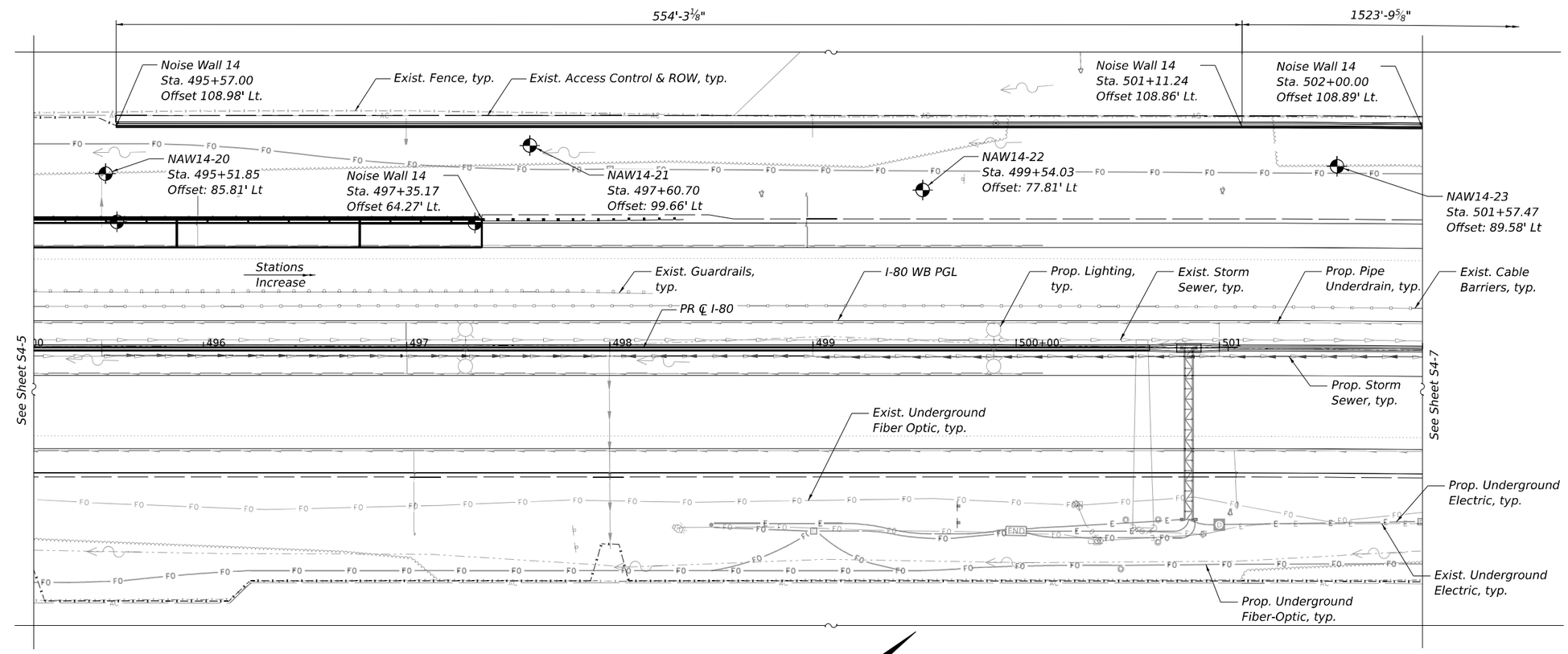

PLAN

(S.N. 099-N1015)

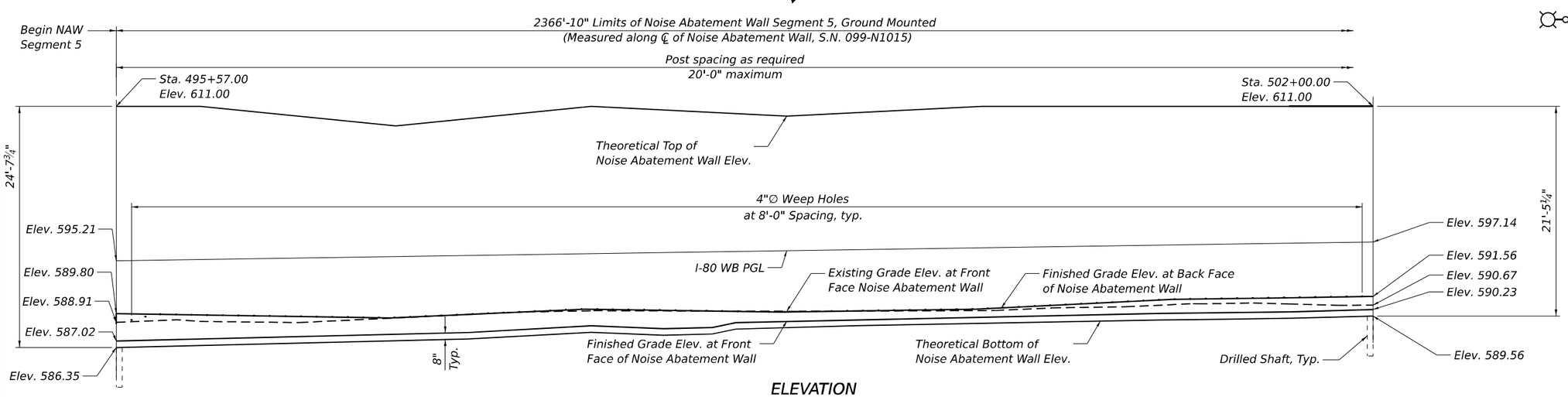

ELEVATION

(S.N. 099-N1015)

LEGEND:

T	Exist. Underground Telephone
E	Exist. Underground Electric
E	Prop. Underground Electric
	Prop. Lighting Cable
G	Exist. Underground Gas
A	Exist. Aerial Line
FO	Exist. Underground Fiber Optic
FO	Prop. Underground Fiber Optic
CTV	Exist. Underground Cable
	Exist. Pipe Underdrain
	Prop. Pipe Underdrain
	Exist. Storm Sewer
	Prop. Storm Sewer
	Prop. Guardrail
	Exist. Guardrail
	Exist. Fence
AC	Exist. Access Control & ROW
	Exist. Cable Barrier
R	Exist. Lighting.
	Prop. Lighting
	Prop. Drainage
	Prop. Concrete Headwall
	Soil Boring

MODEL: BL_PR_I80 - Plan 3 [Sheet]
FILE NAME: pw:\\transystems\pw.bentley.com:transyscorp-pw1-hosted\Documents\Projects_2018\CH401\401180022\02-TranSystems\CAD\62R27\Sheets\23-Structural\Noise Walls\D162R27-SHT-NAW14-STRUCT-6

HBM ENGINEERING GROUP, LLC

USER NAME = lisa.buntin	DESIGNED - PG	REVISED -
	DRAWN - PG, AS	REVISED -
PLOT SCALE =	CHECKED - LAB, MAI	REVISED -
PLOT DATE = 8/10/2023	DATE - 6/26/23	REVISED -

STATE OF ILLINOIS
DEPARTMENT OF TRANSPORTATION

GENERAL PLAN AND ELEVATION 6
NOISE ABATEMENT WALL 14 – SN 099–N1015

SCALE: | SHEET S4-6 OF S4-27 SHEETS | STA. TO STA.

F.A.I. RTE.	SECTION	COUNTY	TOTAL SHEETS	SHEET NO.
I-80	FAI 80 21 STRUCTURE 6	WILL	898	629
		CONTRACT NO. 62R27		
	ILLINOIS	FED. AID PROJECT		

NOTES:

1. For General Notes, Index Sheets, General Details and Total Bill of Material, see Sheet S4-10
2. Stations are measured along and offsets are measured to PR ℄ I-80.

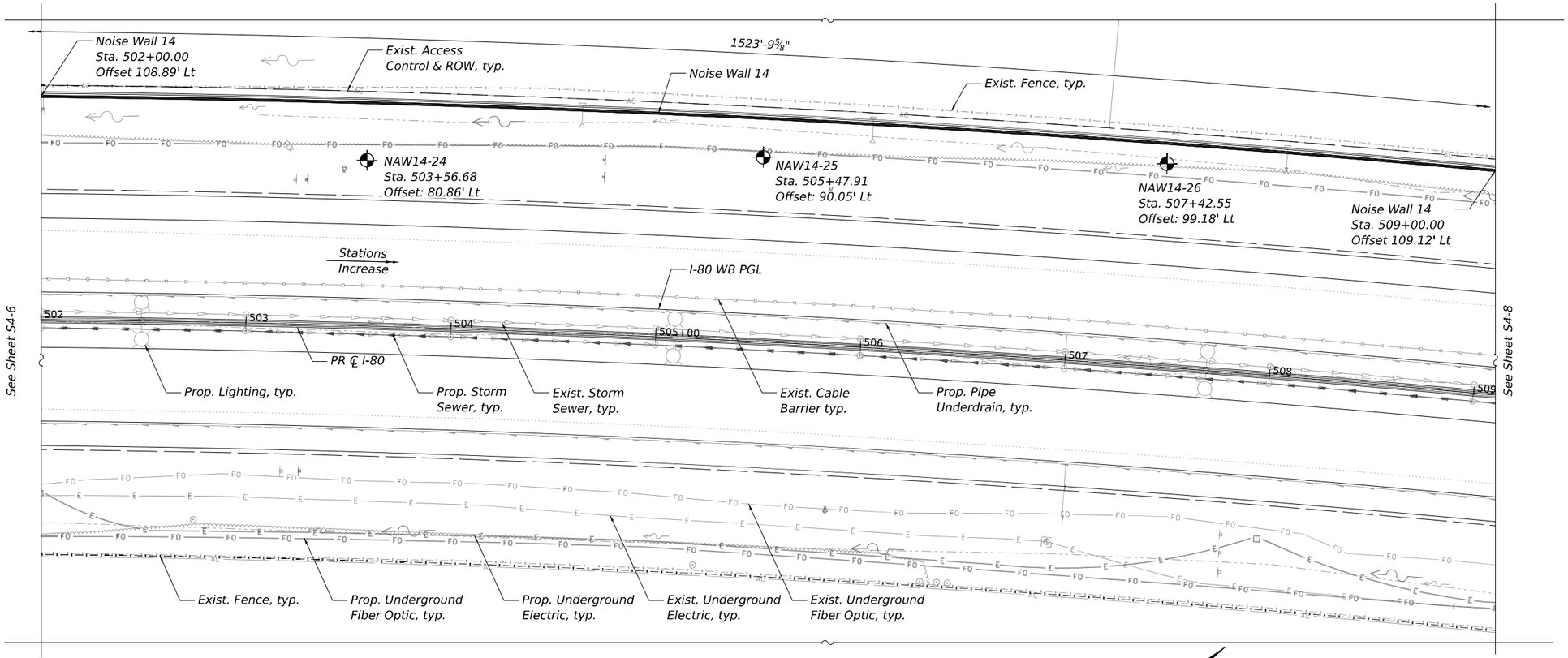

PLAN

(S.N. 099-N1015)

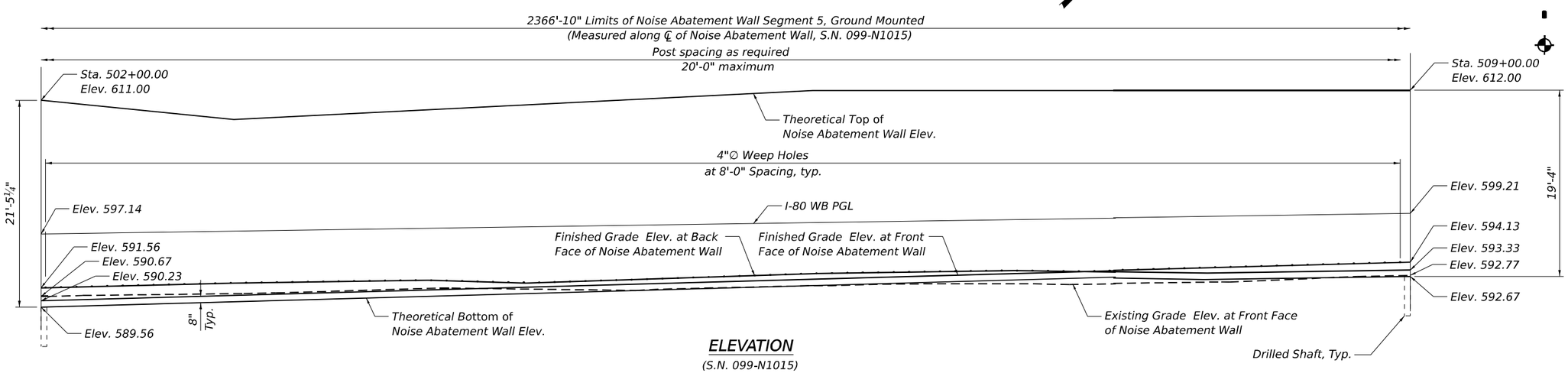

ELEVATION

(S.N. 099-N1015)

LEGEND:

- Exist. Underground Telephone
- Exist. Underground Electric
- Prop. Underground Electric
- Prop. Lighting Cable
- Exist. Underground Gas
- Exist. Aerial Line
- Exist. Underground Fiber Optic
- Prop. Underground Fiber Optic
- Exist. Underground Cable
- Exist. Pipe Underdrain
- Prop. Pipe Underdrain
- Exist. Storm Sewer
- Prop. Storm Sewer
- Prop. Guardrail
- Exist. Guardrail
- Exist. Fence
- Exist. Access Control & ROW
- Exist. Cable Barrier
- Exist. Lighting.
- Prop. Lighting
- Prop. Drainage
- Prop. Concrete Headwall
- Soil Boring

MODEL: BL_PR_I80 - Plan 3 [Sheet]
FILE NAME: pw://transystems-pw.bentley.com:transyscorp-pw1-hosted/Documents/Projects_2018/CH401/401180022/02-TranSystems/CAD/62R27/Sheets/23-Structural/Noise Walls/D162R27-SHT-NAW14-STRUCT-7

HBM ENGINEERING GROUP, LLC	USER NAME = lisa.buntin	DESIGNED - PG	REVISED -	STATE OF ILLINOIS DEPARTMENT OF TRANSPORTATION	GENERAL PLAN AND ELEVATION 7 NOISE ABATEMENT WALL 14 – SN 099–N1015	F.A.I. RTE.	SECTION	COUNTY	TOTAL SHEETS	SHEET NO.
		DRAWN - PG, AS	REVISED -			I-80	FAI 80 21 STRUCTURE 6	WILL	898	630
	PLOT SCALE =	CHECKED - LAB, MAI	REVISED -					CONTRACT NO. 62R27		
	PLOT DATE = 8/10/2023	DATE - 6/26/23	REVISED -		SCALE: SHEET S4-7 OF S4-27 SHEETS STA. TO STA.		ILLINOIS	FED. AID PROJECT		

NOTES:

1. For General Notes, Index of Sheets, General Details and Total Bill of Material, see Sheet S4-10
2. Stations are measured along and offsets are measured to PR ℄ I-80.

LEGEND:

- Exist. Underground Telephone
- Exist. Underground Electric
- Prop. Underground Electric
- Prop. Lighting Cable
- Exist. Underground Gas
- Exist. Aerial Line
- Exist. Underground Fiber Optic
- Prop. Underground Fiber Optic
- Exist. Underground Cable
- Exist. Pipe Underdrain
- Prop. Pipe Underdrain
- Exist. Storm Sewer
- Prop. Storm Sewer
- Prop. Guardrail
- Exist. Guardrail
- Exist. Fence
- Exist. Access Control & ROW
- Exist. Cable Barrier
- Exist. Lighting.
- Prop. Lighting
- Prop. Drainage
- Prop. Concrete Headwall
- Soil Boring

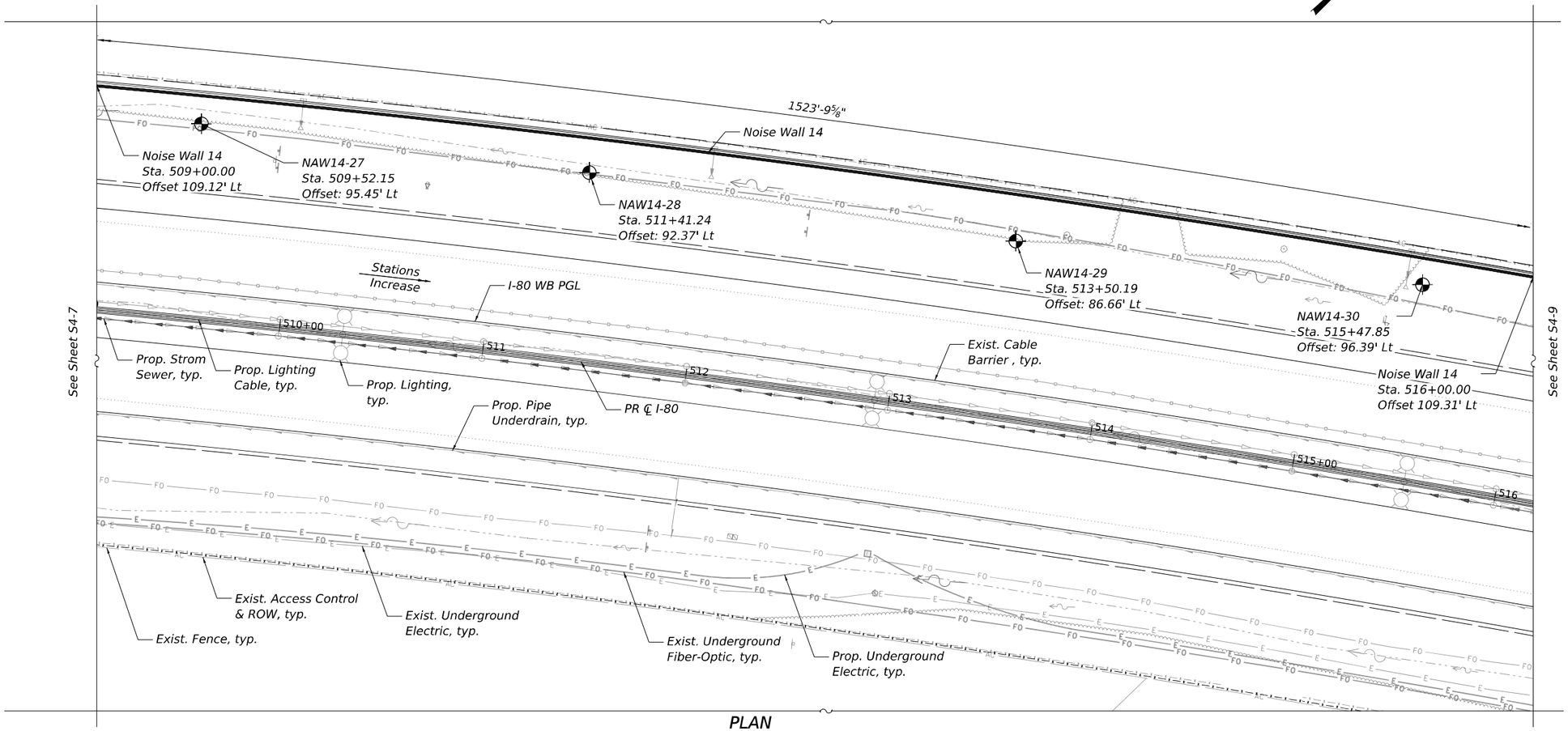

PLAN

(S.N. 099-N1015)

2366'-10" Limits of Noise Abatement Wall Segment 5, Ground Mounted
(Measured along ℄ of Noise Abatement Wall, S.N. 099-N1015)

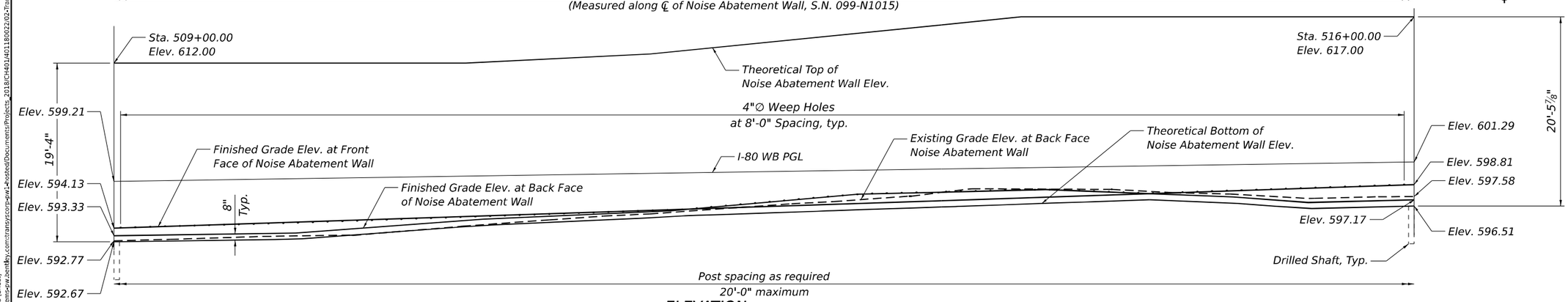

ELEVATION

(S.N. 099-N1015)

MODEL: BL_PR_I80 - Plan 3 [Sheet]
FILE NAME: pw://transystems-pw.bentley.com:transyscorp-pw2-hosted/Documents/Projects_2018/CH401/401180022/02-TranSystems/CAD/62R27/Sheets/23-Structural/Noise Walls/D162R27-SHT-NAW14-STRUCT-8

HBM ENGINEERING GROUP, LLC	USER NAME = lisa.buntin	DESIGNED - PG	REVISED -	STATE OF ILLINOIS DEPARTMENT OF TRANSPORTATION	GENERAL PLAN AND ELEVATION 8 NOISE ABATEMENT WALL 14 – SN 099–N1015
		DRAWN - PG, AS	REVISED -		
	PLOT SCALE =	CHECKED - LAB, MAI	REVISED -		
	PLOT DATE = 8/10/2023	DATE - 6/26/23	REVISED -		SCALE: SHEET S4-8 OF S4-27 SHEETS STA. TO STA.

F.A.I. RTE.	SECTION	COUNTY	TOTAL SHEETS	SHEET NO.
I-80	FAI 80 21 STRUCTURE 6	WILL	898	631
		CONTRACT NO. 62R27		
	ILLINOIS	FED. AID PROJECT		

NOTES:

1. For General Notes, Index of Sheets, General Details and Total Bill of Material, see Sheet S4-10
2. Stations are measured along and offsets are measured to PR ℄ I-80.

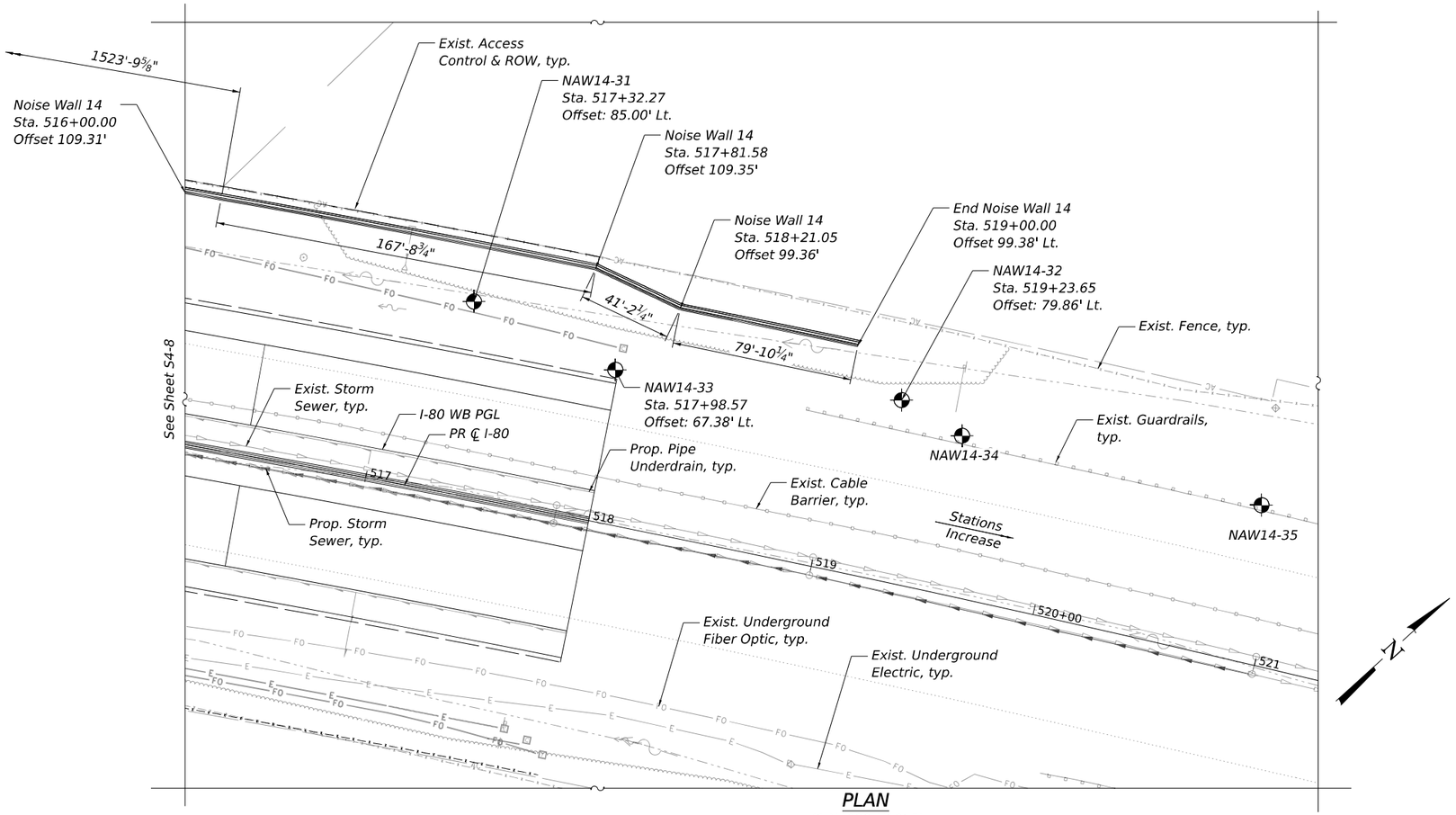

PLAN

(S.N. 099-N1015)

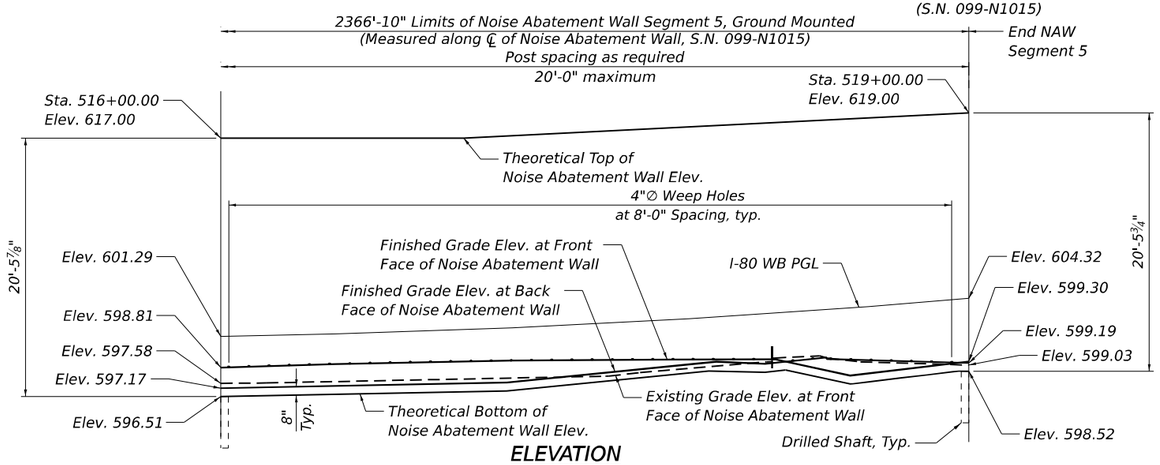

ELEVATION

(S.N. 099-N1015)

LEGEND:

T	Exist. Underground Telephone
E	Exist. Underground Electric
E	Prop. Underground Electric
	Prop. Lighting Cable
G	Exist. Underground Gas
A	Exist. Aerial Line
FO	Exist. Underground Fiber Optic
FO	Prop. Underground Fiber Optic
CTV	Exist. Underground Cable
	Exist. Pipe Underdrain
	Prop. Pipe Underdrain
	Exist. Storm Sewer
	Prop. Storm Sewer
	Prop. Guardrail
	Exist. Guardrail
	Exist. Fence
AC	Exist. Access Control & ROW
	Exist. Cable Barrier
R	Exist. Lighting.
	Prop. Lighting
	Prop. Drainage
	Prop. Concrete Headwall
	Soil Boring

MODEL: BL_PR_I80 - Plan 3 [Sheet]
FILE NAME: pw:\\transystems-pw.bentley.com:transyscorp-pw1-hosted\Documents\Projects_2018\CH401\401180022\02-TranSystems\CAD\62R27\Sheets\23-Structural\Noise Walls\D162R27-SHT-NAW14-STRUCT-9

HBM ENGINEERING GROUP, LLC

USER NAME = lisa.buntin	DESIGNED - PG	REVISED -	
	DRAWN - PG, AS	REVISED -	
PLOT SCALE =	CHECKED - LAB, MAI	REVISED -	
PLOT DATE = 8/10/2023	DATE - 6/26/23	REVISED -	

STATE OF ILLINOIS
DEPARTMENT OF TRANSPORTATION

GENERAL PLAN AND ELEVATION 9
NOISE ABATEMENT WALL 14 – SN 099–N1015

SCALE: | SHEET S4-9 OF S4-27 SHEETS | STA. | TO STA.

F.A.I. RTE.	SECTION	COUNTY	TOTAL SHEETS	SHEET NO.
I-80	FAI 80 21 STRUCTURE 6	WILL	898	632
		CONTRACT NO. 62R27		
	ILLINOIS	FED. AID PROJECT		

GENERAL NOTES:

1. The Contractor shall field verify location of the existing utilities prior to construction. The Contractor shall take precautions not to damage existing utilities. Any such damage shall be repaired by the Contractor at no additional cost.

2. Noise Abatement Wall drilled shaft foundation diameter, depth and spacing to be determined by the Contractor.

3. Contractor shall provide Ashlar Stone Finish on both faces of Noise Abatement Wall. See Sheet S4-27 .

4. All underground utilities or drainage structure removal or installation shall be completed prior to foundation installation.

5. Under no circumstances should truck beds be raised underneath ComEd transmission lines.

6. Contractor shall provide 4" ∅ weep holes at ground level in the bottom of the wall at a spacing of 8 ft from stations 471+25 to 478+37, 479+50 to 494+07, and 495+57 to 519+00. Cost shall be included with Noise Abatement Wall, Ground Mounted.

7. For posts locations, spacing and numbering in Structure mounted wall, See sheets S5-3 thru S5-8.

8. For SN 099-N1011 Boring logs, see sheets S4-17 and S4-18.
For SN 099-N1012 Boring logs, see sheets S4-18 and S4-19.
For SN 099-N1013 Boring logs, see sheets S4-19 to S4-21.
For SN 099-N1015 Boring logs, see sheets S4-22 to S4-26.

9. Any rock excavation required for noise wall construction will not be paid for separately and will be included with Noise Abatement Wall, Ground Mounted.

INDEX OF SHEETS

S4-1	General Plan And Elevation 1
S4-2	General Plan And Elevation 2
S4-3	General Plan And Elevation 3
S4-4	General Plan And Elevation 4
S4-5	General Plan And Elevation 5
S4-6	General Plan And Elevation 6
S4-7	General Plan And Elevation 7
S4-8	General Plan And Elevation 8
S4-9	General Plan And Elevation 9
S4-10	General Notes And Bill Of Material
S4-11	Profile Grade and Horizontal Curve Data
S4-12	Typical Sections
S4-13	Sections and Details
S4-14	Noise Abatement Wall Data Table 1
S4-15	Noise Abatement Wall Data Table 2
S4-16	Soil Borings 1
S4-17	Soil Borings 2
S4-18	Soil Borings 3
S4-19	Soil Borings 4
S4-20	Soil Borings 5
S4-21	Soil Borings 6
S4-22	Soil Borings 7
S4-23	Soil Borings 8
S4-24	Soil Borings 9
S4-25	Soil Borings 10
S4-26	Soil Borings 11
S4-27	Ashlar Stone Finish

TOTAL BILL OF MATERIAL

ITEM	UNIT	SN 099-N1011	SN 099-N1012	SN 099-N1013	SN 099-N1014	SN 099-N1015	TOTAL
Name Plates	Each	1	1	1	1	1	5
Geocomposite Wall Drain	Sq Yd	120	209	231	0	430	990
Pipe Underdrains For Structures 4"	Foot	712	435	1,457	0	2,367	4,971
Noise Abatement Wall, Ground Mounted	Sq Ft	13,466	6,159	26,635	0	47,644	93,904
Noise Abatement Wall, Structure Mounted	Sq Ft	0	0	0	5,048	0	5,048

NOISE REDUCTION DATA

Noise Wall Structure Number	Face	From Sta.	To Sta.	Noise Reduction Coefficient	Comments
SN 099-N1011	Roadway Face	471+25.00	519+00.00	Reflective	-
thru 099-N1015	Residential Face	471+25.00	519+00.00	Reflective	-

DESIGN SPECIFICATIONS

AASHTO LRFD Bridge Design Specifications, 9th Edition

DESIGN STRESSES

FIELD UNITS
f'c = 4,000 psi
fy = 60,000 psi (Reinforcement)
fy = 50,000 psi (Struct. Steel, M270 Grade 50, posts)
fy = 36,000 psi (Struct. Steel, M270 Grade 36, all other structural steel)

PRECAST UNITS
f'c = 4,500 psi
fy = 60,000 psi (Reinforcement)
fy = 65,000 psi (Welded Wire Reinforcement)

DESIGN LOADS

Strength III or V Wind: 35 psf
Service I Wind: 15 psf
Unfactored Max. Active Earth Pressure: 159 psf
Unfactored Live Load Surcharge: 87 psf

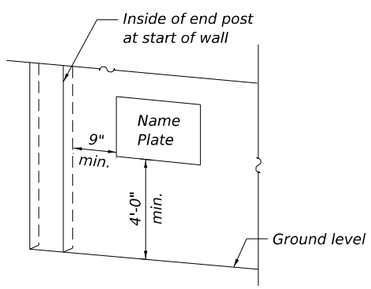

NAME PLATE FOR NOISE ABATEMENT WALL, GROUND MOUNTED

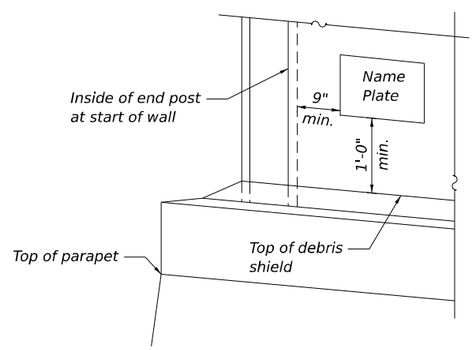

NAME PLATE FOR NOISE ABATEMENT WALL, STRUCTURE MOUNTED

NOISE ABATEMENT WALL
BUILT 202_ BY
STATE OF ILLINOIS
F.A.I. RTE. I-80
SECTION FAI 80 21 STRUCTURE 6
FROM STA. 471+25.00 TO STA. 478+37.00
STRUCTURE NO. 099-N1011

NOISE ABATEMENT WALL
BUILT 202_ BY
STATE OF ILLINOIS
F.A.I. RTE. I-80
SECTION FAI 80 21 STRUCTURE 6
FROM STA. 476+75.00 TO STA. 481+10.00
STRUCTURE NO. 099-N1012

NOISE ABATEMENT WALL
BUILT 202_ BY
STATE OF ILLINOIS
F.A.I. RTE. I-80
SECTION FAI 80 21 STRUCTURE 6
FROM STA. 479+50.00 TO STA. 494+07.00
STRUCTURE NO. 099-N1013

NOISE ABATEMENT WALL
BUILT 202_ BY
STATE OF ILLINOIS
F.A.I. RTE. I-80
SECTION FAI 80 21 STRUCTURE 6
FROM STA. 492+28.83 TO STA. 497+35.17
STRUCTURE NO. 099-N1014

NOISE ABATEMENT WALL
BUILT 202_ BY
STATE OF ILLINOIS
F.A.I. RTE. I-80
SECTION FAI 80 21 STRUCTURE 6
FROM STA. 495+57.00 TO STA. 519+00.00
STRUCTURE NO. 099-N1015

NAME PLATES

See Std. 515001

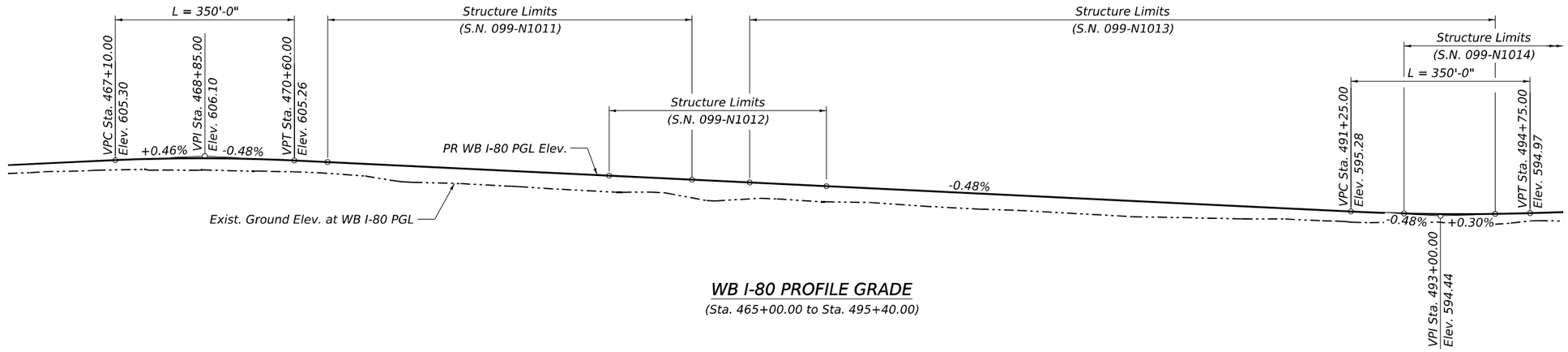

WB I-80 PROFILE GRADE

(Sta. 465+00.00 to Sta. 495+40.00)

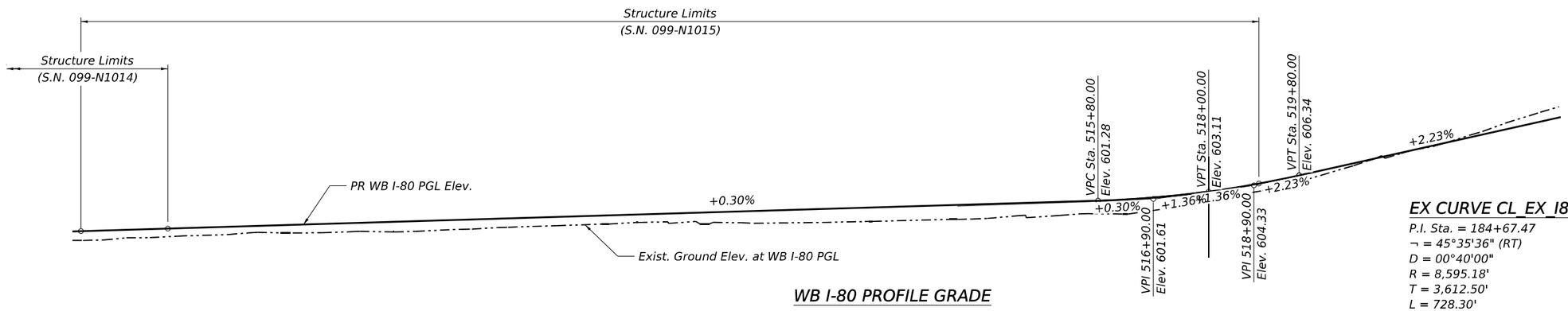

WB I-80 PROFILE GRADE

(Sta. 496+00.00 to Sta. 525+00.00)

EX CURVE CL_EX_I80_2

P.I. Sta. = 184+67.47
¬ = 45°35'36" (RT)
D = 00°40'00"
R = 8,595.18'
T = 3,612.50'
L = 728.30'
E = 13.28'
e =
T.R. =
S.E. Run =
P.C. Sta. = 148+54.97
P.T. Sta. = 216+94.63

PR CURVE CL_PR_I80_W_2

P.I. Sta. = 537+23.60
¬ = 45°35'36" (RT)
D = 00°39'58"
R = 8,600.00'
T = 3,614.53'
L = 6,843.50
E = 728.71'
e = 2.40%
T.R.(PC) = 103'
T.R.(PT) = 129'
S.E. Run (PC) = 144'
S.E. Run (PT) = 180'
P.C. Sta. = 501+09.07
P.T. Sta. = 569+52.57
DESIGN SPEED = 70 MPH

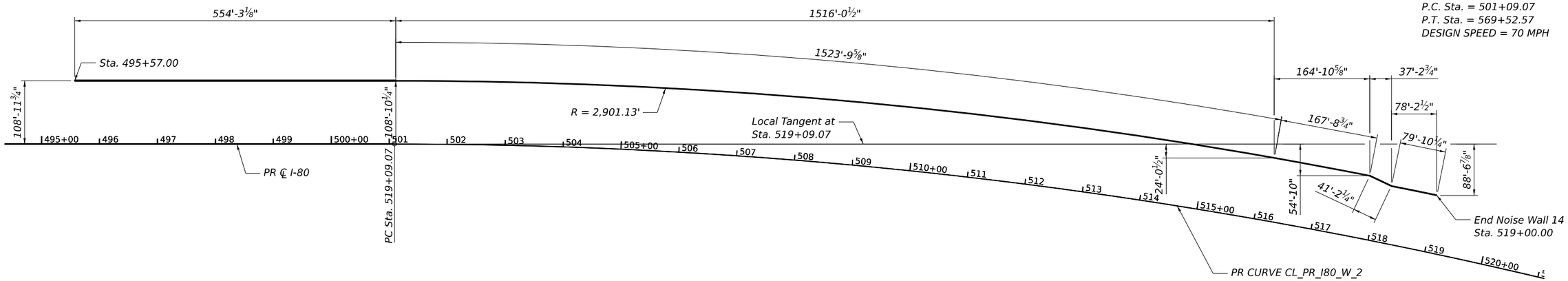

OFFSET SKETCH

(S.N. 099-N1015)
(Dimensions shown are to the ℄ of Noise Wall)

MODEL: BL_PR_I80 • Plan 3 [Sheet]
FILE NAME: pw://transystems-pw.bentley.com:transyscorp-pw1-hosted/Documents/Projects_2018/CH401/401180022/02-TranSystems/CAD/62R27/Sheets/23-Structural/Noise Walls/D162R27-SHT-NW14-STRUCT-10A

HBM ENGINEERING GROUP, LLC	USER NAME = lisa.buntin	DESIGNED - PG	REVISED -	STATE OF ILLINOIS DEPARTMENT OF TRANSPORTATION	PROFILE GRADE AND HORIZONTAL CURVE DATA NOISE ABATEMENT WALL 14	F.A.I. RTE.	SECTION	COUNTY	TOTAL SHEETS / SHEET NO.
		DRAWN - PG, AS	REVISED -			I-80	FAI 80 21 STRUCTURE 6	WILL	898 / 634
	PLOT SCALE =	CHECKED - LAB, MAI	REVISED -					CONTRACT NO. 62R27	
	PLOT DATE = 8/10/2023	DATE - 6/26/23	REVISED -		SCALE: / SHEET S4-11 OF S4-27 SHEETS / STA. / TO STA.		ILLINOIS	FED. AID PROJECT	

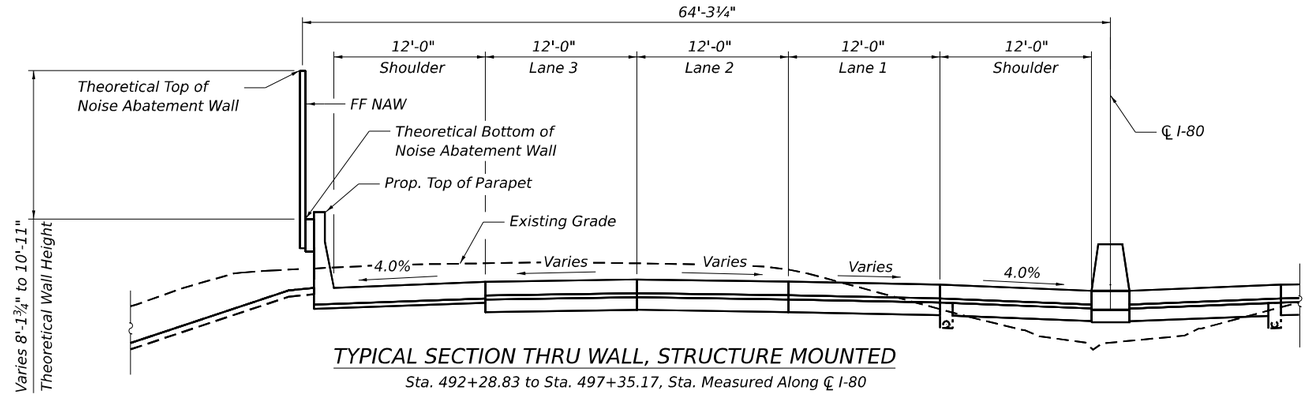

TYPICAL SECTION THRU WALL, STRUCTURE MOUNTED

Sta. 492+28.83 to Sta. 497+35.17, Sta. Measured Along ℄ I-80

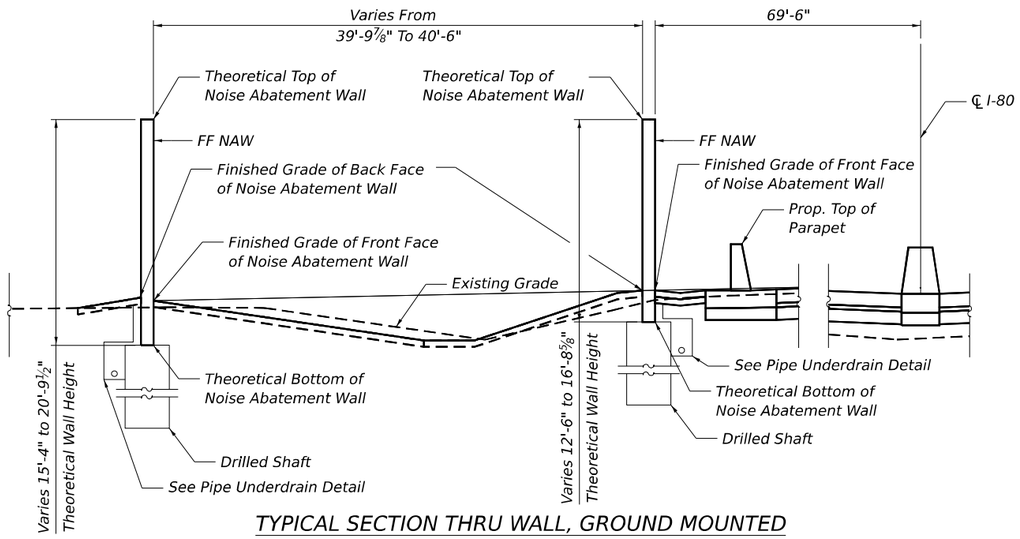

TYPICAL SECTION THRU WALL, GROUND MOUNTED

Sta. 476+75.00 to Sta. 478+37.00
Sta. 479+50.00 to Sta. 481+10.00
Sta. Measured Along ℄ I-80
3'-8" Maximum Retained Fill Height

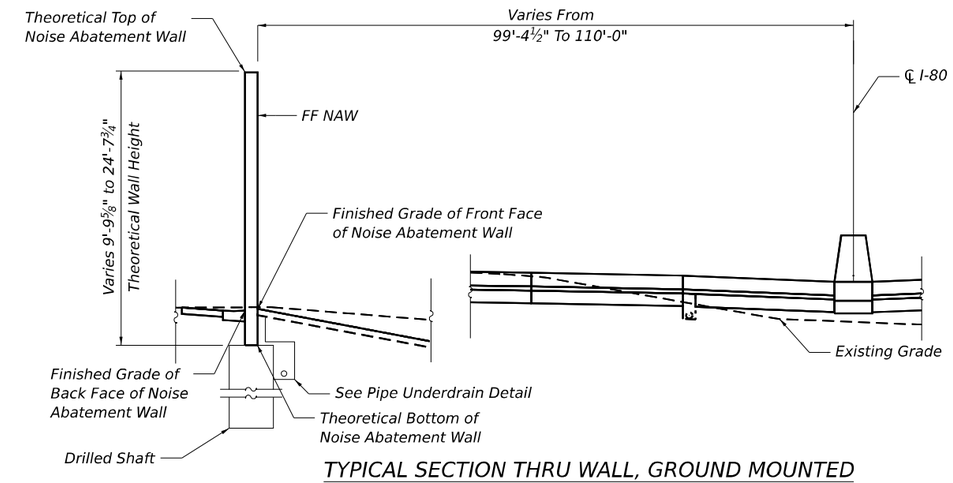

TYPICAL SECTION THRU WALL, GROUND MOUNTED

Sta. 471+25.00 to Sta. 476+75.00
Sta. 481+10.00 to Sta. 492+27.00
Sta. 497+37.00 to Sta. 519+00.00
Sta. Measured Along ℄ I-80
2'-5¼" Maximum Retained Fill Height

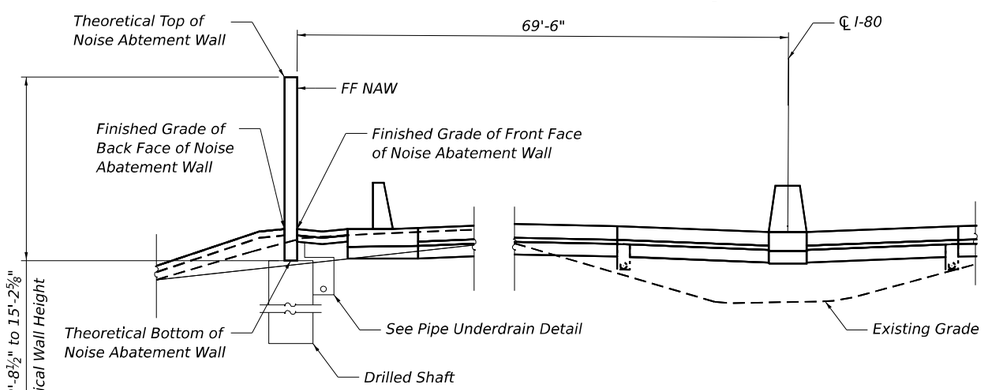

TYPICAL SECTION THRU WALL, GROUND MOUNTED

Sta. 478+37.00 to Sta. 479+50.00
Sta. Measured Along ℄ I-80
3'-8" Maximum Retained Fill Height

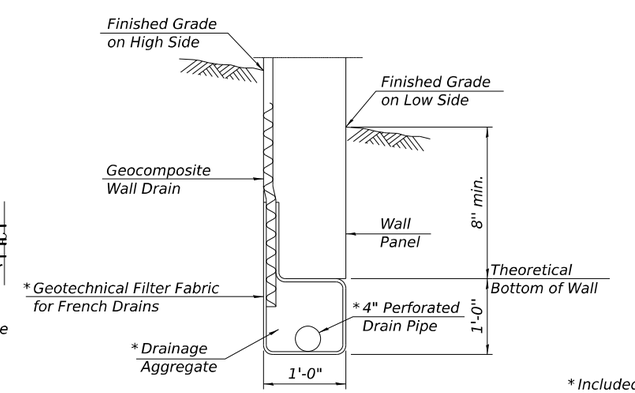

PIPE UNDERDRAIN DETAIL AT DRILLED SHAFTS

*Included in the cost of Pipe Underdrains for Structures 4"

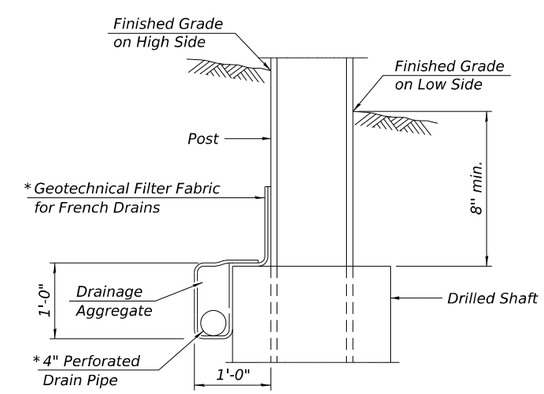

PIPE UNDERDRAIN DETAIL AT DRILLED SHAFTS

MODEL: BL_PR_I80 - Plan 3 (Sheet)
FILE NAME: pw://transystems-pw.bentley.com:TRANSYSCORP-PW1-HOSTED/Documents/Projects_2018/CH401/401180022/02-TransSystems/CAD/62R27/Sheets/23-Structural/Noise Walls/D16ZR2-SHT-NAW14-STRUCT-108

HBM ENGINEERING GROUP, LLC	USER NAME = aditya.joshi	DESIGNED - PG	REVISED -	STATE OF ILLINOIS DEPARTMENT OF TRANSPORTATION	TYPICAL SECTIONS NOISE ABATEMENT WALL 14	F.A.I. RTE.	SECTION	COUNTY	TOTAL SHEETS	SHEET NO.
		DRAWN - PG, AS	REVISED -			I-80	FAI 80 21 STRUCTURE 6	WILL	898	635
	PLOT SCALE =	CHECKED - LAB, MAI	REVISED -					CONTRACT NO. 62R27		
	PLOT DATE = 8/11/2023	DATE - 6/26/23	REVISED -		SCALE: SHEET S4-12 OF S4-27 SHEETS STA. TO STA.		ILLINOIS	FED. AID PROJECT		

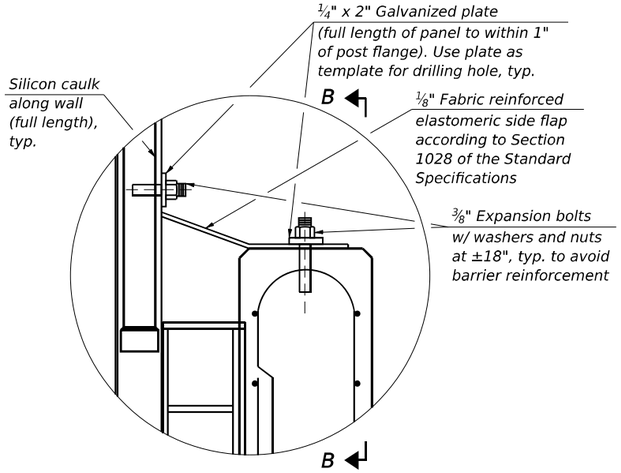

TYPICAL SECTION THRU DEBRIS SHIELD

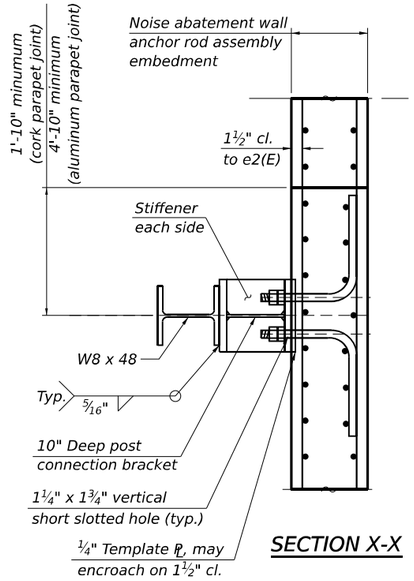

SECTION X-X

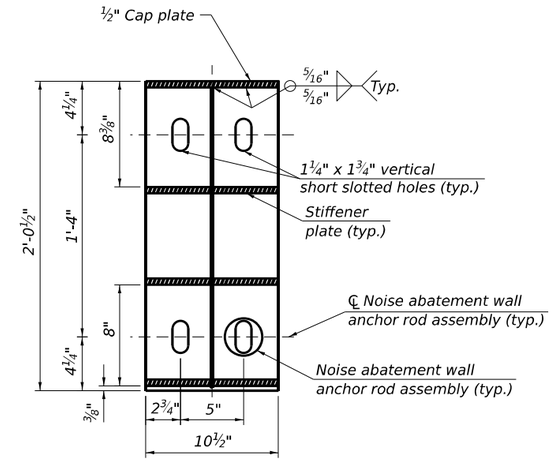

SECTION A-A

(Showing post connection bracket)

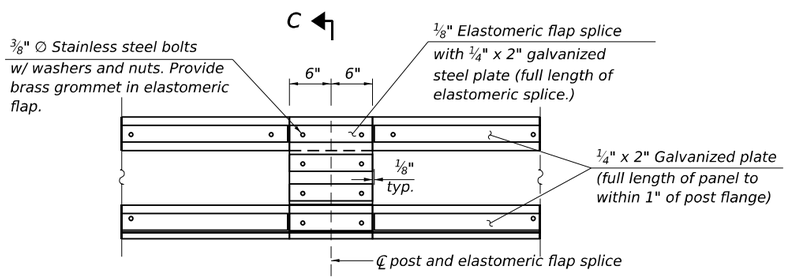

SECTION B-B

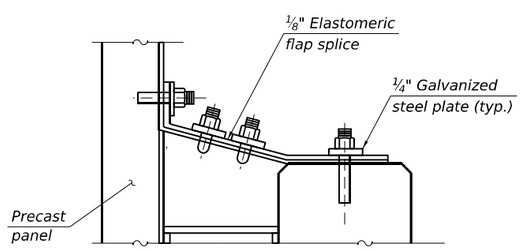

SECTION C-C

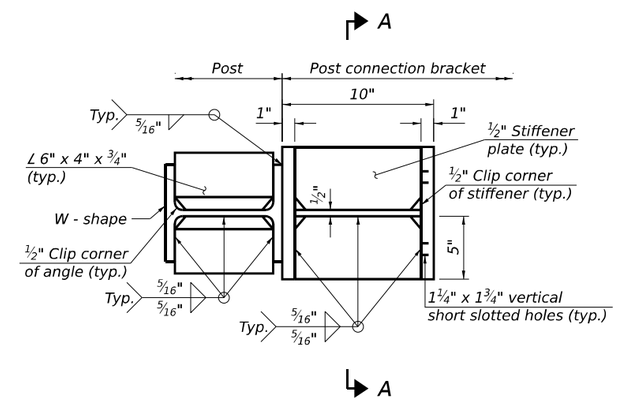

SECTION THRU POST AND POST CONNECTION BRACKET

(Template PL not shown for clarity)

NOTE:

1. Anchorage Slab, Template Plate, and anchor rod details shown for information only. See Anchorage Slab plans for full details.

MODEL: BL_PR_I80 • Plan 3 [Sheet]
FILE NAME: pw://transystems-pw.bentley.com:transyscom-pw1-hosted/Documents/Projects_2018/CH401/401180022/02-TransSystems/CAD/62R27/Sheets/23-Structural/Noise Walls/D162R27-SHT-NAW14-STRUCT-11

HBM ENGINEERING GROUP, LLC	USER NAME = lisa.buntin	DESIGNED - PG	REVISED -	STATE OF ILLINOIS DEPARTMENT OF TRANSPORTATION	SECTIONS AND DETAILS NOISE ABATEMENT WALL 14	F.A.I. RTE.	SECTION	COUNTY	TOTAL SHEETS	SHEET NO.
		DRAWN - PG, AS	REVISED -			I-80	FAI 80 21 STRUCTURE 6	WILL	898	636
	PLOT SCALE =	CHECKED - LAB, MAI	REVISED -					CONTRACT NO. 62R27		
	PLOT DATE = 8/10/2023	DATE - 6/26/23	REVISED -		SCALE: SHEET S4-13 OF S4-27 SHEETS STA. TO STA.		ILLINOIS	FED. AID PROJECT		

NOISE ABATEMENT WALL DATA TABLE

Segment 1 SN 099-N1011

Station	Offset to Centerline Wall (ft)	Theoretical Top of NAW Elev.	I-80 WB PGL Elev.	Finished Grade Elev. At Front Face of NAW	Finished Grade Elev. At Back Face of NAW	Existing Grade Elev. At Front Face of NAW	Theoretical Bottom of NAW Elev.	Theoretical Wall Height (ft)
471+25.00	110.00	609.00	604.94	601.59	606.27	601.44	600.92	8.08
471+45.00	110.00	611.00	604.84	601.26	605.44	601.31	600.59	10.41
471+65.00	110.00	613.00	604.75	600.57	604.66	601.17	599.91	13.09
471+75.00	110.00	613.00	604.70	600.17	604.26	601.10	599.50	13.50
471+85.00	110.00	615.00	604.65	600.02	603.88	601.02	599.35	15.65
472+05.00	110.00	617.00	604.46	599.80	603.09	601.21	599.13	17.87
472+25.00	110.00	619.00	604.46	599.82	602.26	601.47	599.15	19.85
472+25.00	110.00	619.00	604.46	599.82	602.26	601.47	599.15	19.85
472+50.00	110.00	618.00	604.34	599.56	600.51	600.51	598.90	19.10
472+75.00	110.00	617.00	604.22	599.30	599.54	599.54	598.63	18.37
472+90.75	110.00	616.37	604.14	599.13	599.13	599.13	598.47	17.90
473+00.00	110.00	616.00	604.10	599.03	599.00	598.96	598.33	17.67
473+15.00	110.00	616.15	604.02	598.87	598.84	598.84	598.17	17.98
473+50.00	110.00	616.50	603.85	598.48	598.12	598.12	597.45	19.05
473+65.00	110.00	616.65	603.78	598.30	597.83	597.82	597.16	19.49
473+85.00	110.00	616.85	603.69	598.07	597.30	597.30	596.63	20.22
474+00.00	110.00	617.00	603.61	597.89	597.14	597.14	596.48	20.52
474+15.00	110.00	617.00	603.54	597.60	597.02	597.02	596.36	20.64
474+25.00	110.00	617.00	603.49	597.41	597.03	597.03	596.37	20.63
474+50.00	110.00	617.00	603.37	596.92	596.78	596.78	596.11	20.89
474+67.17	110.00	617.00	603.29	596.57	596.57	596.57	595.90	21.10
474+95.97	110.00	617.00	603.15	595.98	596.43	596.42	595.31	21.69
475+00.00	110.00	617.00	603.13	595.94	596.46	596.45	595.27	21.73
475+12.24	110.00	616.63	603.07	595.99	595.99	596.57	595.33	21.31
475+15.00	110.00	616.55	603.06	596.01	595.80	596.60	595.13	21.42
475+50.00	110.00	615.50	602.89	596.41	596.07	596.96	595.41	20.09
475+69.29	110.00	614.92	602.80	596.15	596.15	597.08	595.48	19.44
475+75.00	110.00	614.75	602.77	596.07	596.18	597.13	595.41	19.34
475+88.51	110.00	614.34	602.70	596.09	596.09	597.08	595.42	18.92
475+95.00	110.00	614.15	602.67	596.10	595.82	596.82	595.15	19.00
476+00.00	110.00	614.00	602.65	596.10	596.13	596.62	595.44	18.56
476+12.73	110.00	614.00	602.59	596.13	596.13	596.13	595.47	18.53
476+25.00	110.00	614.00	602.53	596.16	595.69	595.69	595.02	18.98
476+35.00	110.00	614.00	602.48	596.19	595.61	595.61	594.94	19.06
476+50.00	110.00	614.00	602.41	596.22	595.83	595.83	595.16	18.84
476+55.00	110.00	614.00	602.38	596.23	595.90	595.90	595.24	18.76
476+60.00	110.00	614.00	602.36	596.25	595.57	595.97	594.90	19.10
477+00.00	110.00	614.00	602.16	596.05	595.76	596.37	595.10	18.90
477+35.00	110.00	614.70	602.00	595.98	595.88	596.68	595.22	19.48
477+50.00	110.00	615.00	601.92	595.95	595.78	597.13	595.11	19.89
477+55.00	110.00	615.10	601.90	595.94	595.75	597.25	595.08	20.02
477+65.00	110.00	615.30	601.85	595.92	595.31	597.56	594.65	20.65
477+81.43	110.00	615.63	601.77	595.89	595.89	598.16	595.22	20.41
478+00.00	110.00	616.00	601.68	595.59	596.00	597.79	594.92	21.08
478+19.18	110.00	615.42	601.59	595.86	595.86	596.71	595.19	20.23
478+35.00	110.00	614.95	601.51	595.85	595.69	595.79	595.03	19.92
478+37.00	110.00	614.89	601.50	595.84	595.56	595.56	594.90	19.99

Segment 2 SN 099-N1012

Station	Offset to Centerline Wall (ft)	Theoretical Top of NAW Elev.	I-80 WB PGL Elev.	Finished Grade Elev. At Front Face of NAW	Finished Grade Elev. At Back Face of NAW	Existing Grade Elev. At Front Face of NAW	Theoretical Bottom of NAW Elev.	Theoretical Wall Height (ft)
476+75.00	69.50	614.00	602.29	605.83	602.17	601.27	601.50	12.50
477+00.00	69.50	614.00	602.17	605.69	602.02	601.16	601.36	12.64
477+50.00	69.50	615.00	601.92	605.41	601.74	600.96	601.08	13.92
478+00.00	69.50	616.00	601.68	605.11	601.44	600.71	600.78	15.22
478+50.00	69.50	614.50	601.44	604.87	601.20	600.34	600.53	13.97
479+00.00	69.50	613.00	601.20	604.63	600.96	600.01	600.29	12.71
479+50.00	69.50	613.50	600.96	604.38	600.72	599.83	600.05	13.45
480+00.00	69.50	614.00	600.72	604.14	600.48	599.63	599.81	14.19
480+50.00	69.50	615.00	600.48	603.90	600.24	599.34	599.57	15.43
481+00.00	69.50	616.00	600.23	603.66	599.99	599.08	599.33	16.67
481+10.00	69.50	616.00	600.19	603.61	599.95	599.05	599.28	16.72

NOISE ABATEMENT WALL DATA TABLE

Segment 3 SN 099-N1013

Station	Offset to Centerline Wall (ft)	Theoretical Top of NAW Elev.	I-80 WB PGL Elev.	Finished Grade Elev. At Front Face of NAW	Finished Grade Elev. At Back Face of NAW	Existing Grade Elev. At Front Face of NAW	Theoretical Bottom of NAW Elev.	Theoretical Wall Height (ft)
479+50.00	109.32	613.50	600.96	595.75	596.56	596.27	595.08	18.42
479+75.00	109.32	613.75	600.84	597.90	598.54	598.33	597.23	16.52
479+91.59	109.31	613.92	600.76	599.06	599.06	598.96	598.39	15.53
480+00.00	109.31	614.00	600.72	599.64	599.32	599.13	598.66	15.34
480+50.00	109.30	615.00	600.47	600.55	600.32	600.14	599.65	15.35
481+00.00	109.29	616.00	600.23	601.48	601.25	601.28	600.59	15.41
481+50.00	109.28	616.00	599.99	602.50	601.44	601.75	600.77	15.23
482+00.00	109.27	616.00	599.75	602.33	601.63	601.69	600.96	15.04
482+24.97	109.26	616.25	599.63	601.72	601.72	601.84	601.05	15.20
482+50.00	109.26	616.50	599.51	601.11	601.81	601.88	600.44	16.06
482+56.58	109.26	616.57	599.48	600.95	601.84	601.91	600.28	16.28
482+83.60	109.25	616.84	599.35	600.83	601.94	602.03	600.16	16.67
482+95.60	109.25	616.96	599.29	601.22	601.99	602.00	600.55	16.41
483+00.00	109.25	617.00	599.27	601.20	602.00	601.99	600.53	16.47
483+50.00	109.24	616.50	599.03	600.97	601.85	601.80	600.31	16.19
484+00.00	109.23	616.00	598.79	600.75	601.69	601.61	600.08	15.92
484+50.00	109.22	615.50	598.54	600.52	601.54	601.45	599.86	15.64
485+00.00	109.20	615.00	598.30	600.30	601.38	601.17	599.63	15.37
485+50.00	109.19	616.50	598.06	600.08	601.23	600.83	599.41	17.09
486+00.00	109.18	618.00	597.82	599.85	601.07	600.35	599.18	18.82
486+50.00	109.17	618.00	597.58	599.63	600.92	600.20	598.96	19.04
487+00.00	109.16	618.00	597.34	599.40	600.76	600.01	598.74	19.26
487+50.00	109.15	617.50	597.10	598.60	599.96	599.88	597.93	19.57
488+00.00	109.14	617.00	596.85	597.79	599.15	599.16	597.12	19.88
488+50.00	109.13	615.00	596.61	596.99	597.30	597.46	596.32	18.68
488+75.55	109.12	613.98	596.49	596.36	596.36	596.54	595.69	18.29
489+00.00	109.12	613.00	596.37	595.77	595.45	595.69	594.79	18.21
489+34.84	109.11	612.65	596.20	594.54	594.54	594.88	593.88	18.77
489+50.00	109.11	612.50	596.13	593.57	594.15	594.55	592.90	19.60
489+80.83	109.10	612.19	595.98	593.52	593.52	593.79	592.85	19.34
490+00.00	109.10	612.00	595.89	593.46	593.12	593.38	592.46	19.54
490+50.00	109.09	612.00	595.65	592.36	592.10	592.43	591.43	20.57
491+00.00	109.08	612.00	595.41	591.34	591.07	591.47	590.41	21.59
491+40.02	109.07	611.20	595.23	590.98	590.32	590.80	589.66	21.54
491+50.00	109.06	611.00	595.19	590.89	590.14	590.64	589.47	21.53
492+00.00	109.05	610.00	595.00	590.43	589.56	589.84	588.90	21.10
492+50.00	109.04	609.50	594.88	590.27	589.49	589.75	588.82	20.68
493+00.00	109.03	609.00	594.78	590.43	589.41	589.62	588.75	20.25
493+50.00	109.02	610.00	594.79	589.53	589.34	589.45	588.68	21.32
493+60.84	109.02	610.22	594.79	589.33	589.33	589.42	588.66	21.56
493+75.00	109.02	610.50	594.79	589.07	589.31	589.37	588.40	22.10
494+00.00	109.01	611.00	594.81	588.60	589.27	589.29	587.94	23.06
494+07.00	109.01	610.93	594.83	588.96	589.23	589.28	588.29	22.64

NOTE:

1. Theoretical Top of NAW Elev., Theoretical Bottom of NAW Elev., Finished Grade Elev. at Front Face of NAW, and Finished Grade Elev. at Back Face of NAW shall be taken as straight lines in the segments between each pair of stations shown in the NAW Data Table.

NOISE ABATEMENT WALL DATA TABLE

Segment 4 SN 099-N1014

Post	Station	Offset to Centerline of Post (ft)	Theoretical Top of NAW Elev.	I-80 WB PGL Elev.	Top of Parapet Elev.	Existing Grade Elev. At Front Face of NAW	Theoretical Bottom of NAW Elev.	Theoretical Wall Height (ft)
P14-01	492+28.83	64.27	609.73	594.92	600.67	595.75	600.17	9.56
P14-01A	492+36.67	64.27	609.63	594.90	600.65	595.76	600.15	9.49
P14-02	492+44.50	64.27	609.56	594.89	600.63	595.77	600.13	9.43
P14-03	492+56.17	64.27	609.44	594.87	600.61	595.78	600.11	9.33
P14-04	492+67.83	64.27	609.32	594.84	600.58	595.79	600.08	9.24
P14-05	492+79.50	64.27	609.21	594.82	600.57	595.80	600.07	9.14
P14-06	492+91.17	64.27	609.09	594.80	600.55	595.81	600.05	9.04
P14-07	492+99.50	64.27	609.01	594.78	600.54	595.82	600.04	8.96
P14-08	493+11.17	64.27	609.22	594.78	600.54	595.84	600.04	9.19
P14-09	493+22.83	64.27	609.46	594.78	600.53	595.86	600.03	9.43
P14-10	493+34.50	64.27	609.69	594.78	600.53	595.88	600.03	9.66
P14-11	493+46.17	64.27	609.92	594.79	600.52	595.90	600.02	9.90
P14-12	493+57.83	64.27	610.16	594.79	600.53	595.93	600.03	10.13
P14-13	493+69.50	64.27	610.39	594.79	600.53	595.95	600.03	10.36
P14-14	493+81.17	64.27	610.62	594.79	600.54	595.97	600.04	10.58
P14-15	493+89.50	64.27	610.79	594.79	600.55	595.98	600.05	10.74
P14-16	494+01.17	64.27	610.99	594.82	600.56	596.02	600.06	10.92
P14-17	494+12.83	64.27	610.87	594.84	600.58	596.05	600.08	10.79
P14-18	494+24.50	64.27	610.76	594.86	600.60	596.07	600.10	10.65
P14-19	494+36.17	64.27	610.64	594.89	600.63	596.09	600.13	10.51
P14-20	494+47.83	64.27	610.52	594.91	600.65	596.11	600.15	10.37
P14-21	494+59.50	64.27	610.41	594.93	600.68	596.13	600.18	10.22
P14-22	494+71.17	64.27	610.29	594.96	600.71	596.15	600.21	10.07
P14-23	494+79.50	64.27	610.21	594.98	600.74	596.16	600.24	9.97
P14-24	494+91.17	64.27	610.09	595.01	600.77	596.18	600.27	9.81
P14-25	495+02.83	64.27	610.03	595.05	600.81	596.20	600.31	9.72
P14-26	495+14.50	64.27	610.15	595.08	600.84	596.23	600.34	9.80
P14-27	495+26.17	64.27	610.26	595.12	600.88	596.26	600.38	9.88
P14-28	495+37.83	64.27	610.38	595.15	600.91	596.29	600.41	9.96
P14-29	495+49.50	64.27	610.50	595.19	600.95	596.32	600.45	10.05
P14-30	495+61.17	64.27	610.61	595.22	600.98	596.35	600.48	10.13
P14-31	495+69.50	64.27	610.70	595.25	601.01	596.37	600.51	10.19
P14-32	495+81.17	64.27	610.81	595.28	601.04	596.40	600.54	10.27
P14-33	495+92.83	64.27	610.93	595.32	601.08	596.43	600.58	10.35
P14-34	496+04.50	64.27	610.91	595.35	601.11	596.45	600.61	10.30
P14-35	496+16.17	64.27	610.68	595.39	601.15	596.47	600.65	10.03
P14-36	496+27.83	64.27	610.44	595.42	601.18	596.51	600.68	9.76
P14-37	496+39.50	64.27	610.21	595.46	601.22	596.54	600.72	9.49
P14-38	496+51.17	64.27	609.98	595.49	601.25	596.58	600.75	9.22
P14-39	496+59.50	64.27	609.81	595.52	601.28	596.60	600.78	9.03
P14-40	496+71.17	64.27	609.58	595.55	601.31	596.64	600.81	8.76
P14-41	496+82.83	64.27	609.34	595.59	601.35	596.67	600.85	8.49
P14-42	496+94.50	64.27	609.11	595.62	601.38	596.71	600.88	8.23
P14-43	497+02.83	64.27	609.06	595.65	601.41	596.73	600.91	8.15
P14-44	497+08.83	64.27	609.18	595.67	601.43	596.75	600.93	8.25
P14-45	497+20.17	64.27	609.40	595.70	601.46	596.77	600.96	8.44
P14-46	497+27.67	64.27	609.55	595.72	601.48	596.79	600.98	8.57
P14-47	497+35.17	64.27	609.70	595.75	601.51	596.81	601.01	8.70

Segment 5 SN 099-N1015

Station	Offset to Centerline Wall (ft)	Theoretical Top of NAW Elev.	I-80 WB PGL Elev.	Finished Grade Elev. At Front Face of NAW	Finished Grade Elev. At Back Face of NAW	Existing Grade Elev. At Front Face of NAW	Theoretical Bottom of NAW Elev.	Theoretical Wall Height (ft)
495+57.00	108.98	611.00	595.21	587.02	589.80	588.91	586.35	24.65
496+00.00	108.97	611.00	595.34	587.22	589.64	589.02	586.55	24.45
496+50.00	108.96	610.00	595.49	587.46	589.49	588.89	586.80	23.20
497+00.00	108.95	609.00	595.64	587.70	589.38	589.38	587.04	21.96
497+37.26	108.94	609.75	595.75	587.88	589.71	589.73	587.21	22.53
497+50.00	108.94	610.00	595.79	588.02	589.83	589.85	587.35	22.65
498+00.00	108.92	611.00	595.94	588.55	590.24	590.10	587.89	23.11
498+37.02	108.92	610.63	596.05	588.25	590.13	590.07	587.58	23.05
498+50.00	108.91	610.50	596.09	588.32	590.09	590.07	587.65	22.85
498+62.02	108.91	610.38	596.13	588.39	590.06	590.07	587.72	22.66
498+74.02	108.91	610.26	596.16	588.89	590.02	590.06	588.23	22.03
499+00.00	108.90	610.00	596.24	589.04	589.96	590.04	588.37	21.63

NOISE ABATEMENT WALL DATA TABLE

Segment 5 SN 099-N1015 Continued

Station	Offset to Centerline Wall (ft)	Theoretical Top of NAW Elev.	I-80 WB PGL Elev.	Finished Grade Elev. At Front Face of NAW	Finished Grade Elev. At Back Face of NAW	Existing Grade Elev. At Front Face of NAW	Theoretical Bottom of NAW Elev.	Theoretical Wall Height (ft)
499+35.77	108.90	610.36	596.35	589.24	590.07	590.04	588.57	21.79
499+50.00	108.89	610.50	596.39	589.29	590.11	590.07	588.62	21.88
500+00.00	108.88	611.00	596.54	589.48	590.28	590.12	588.81	22.19
500+50.00	108.87	611.00	596.69	589.66	590.78	590.43	589.00	22.00
500+90.27	108.86	611.00	596.81	589.82	591.18	590.66	589.15	21.85
501+00.00	108.86	611.00	596.84	589.84	591.26	590.75	589.17	21.83
501+11.24	108.86	611.00	596.87	589.86	591.29	590.81	589.19	21.81
501+25.16	108.86	611.00	596.91	589.89	591.34	590.85	589.22	21.78
501+50.00	108.87	611.00	596.99	589.97	591.41	590.83	589.30	21.70
501+57.00	108.87	611.00	597.01	589.99	591.43	590.79	589.32	21.68
502+00.00	108.89	611.00	597.14	590.23	591.56	590.67	589.56	21.44
502+50.00	108.91	610.00	597.28	590.51	591.81	590.87	589.84	20.16
503+00.00	108.92	609.00	597.43	590.78	592.05	590.95	590.12	18.88
503+50.00	108.94	609.50	597.58	591.06	592.20	591.22	590.40	19.10
504+00.00	108.96	610.00	597.73	591.35	592.33	591.51	590.68	19.32
504+50.00	108.98	610.50	597.88	591.62	592.10	591.48	590.96	19.54
505+00.00	108.99	611.00	598.03	591.90	592.34	591.31	591.23	19.77
505+50.00	109.01	611.50	598.17	592.18	592.69	591.56	591.52	19.98
506+00.00	109.03	612.00	598.32	592.46	593.02	591.78	591.79	20.21
506+50.00	109.04	612.00	598.47	592.74	593.19	591.97	592.07	19.93
507+00.00	109.06	612.00	598.62	593.02	593.33	591.98	592.35	19.65
507+40.64	109.07	612.00	598.74	593.24	593.25	591.93	592.58	19.42
507+50.00	109.07	612.00	598.77	593.30	593.22	591.96	592.55	19.45
508+00.00	109.09	612.00	598.91	593.57	593.07	592.11	592.40	19.60
508+03.90	109.09	612.00	598.93	593.60	593.06	592.12	592.39	19.61
508+50.00	109.10	612.00	599.06	593.85	593.18	592.40	592.52	19.48
509+00.00	109.12	612.00	599.21	594.13	593.33	592.77	592.67	19.33
509+50.00	109.13	612.00	599.36	594.41	593.48	593.03	592.81	19.19
510+00.00	109.15	612.00	599.51	594.69	593.64	593.32	592.97	19.03
510+11.69	109.15	612.00	599.54	594.76	593.70	593.36	593.04	18.96
510+50.00	109.16	612.00	599.65	595.02	594.27	593.58	593.60	18.40
510+97.00	109.18	612.00	599.79	595.34	594.97	594.37	594.30	17.70
511+00.00	109.18	612.00	599.80	595.36	595.00	594.42	594.34	17.66
511+17.00	109.18	612.17	599.85	595.48	595.22	594.67	594.55	17.62
511+50.00	109.19	612.50	599.95	595.71	595.51	595.14	594.85	17.65
512+00.00	109.21	613.00	600.10	596.05	595.96	595.72	595.30	17.70
512+17.81	109.21	613.36	600.15	596.18	596.18	595.98	595.51	17.85
512+50.00	109.22	614.00	600.25	596.40	596.75	596.43	595.73	18.27
513+00.00	109.23	615.00	600.40	596.75	597.63	597.08	596.08	18.92
513+50.00	109.25	616.00	600.54	597.08	598.04	597.87	596.42	19.58
514+00.00	109.26	617.00	600.69	597.43	598.28	598.41	596.76	20.24
514+50.00	109.27	617.00	600.84	597.78	598.06	598.36	597.11	19.89
514+69.36	109.28	617.00	600.90	597.91	597.91	598.15	597.24	19.76
515+00.00	109.29	617.00	600.99	598.12	597.66	597.92	597.00	20.00
515+17.00	109.29	617.00	601.04	598.24	597.52	597.81	596.85	20.15
515+50.00	109.30	617.00	601.14	598.46	597.05	597.45	596.39	20.61
515+57.00	109.30	617.00	601.16	598.51	596.96	597.39	596.30	20.70
516+00.00	109.31	617.00	601.29	598.81	597.17	597.58	596.51	20.49
516+15.95	109.31	617.00	601.35	598.91	597.25	597.60	596.59	20.41
516+50.00	109.32	617.00	601.50	599.11	597.39	597.75	596.72	20.28
517+00.00	109.33	617.00	601.85	599.32	597.58	597.94	596.92	20.08
517+17.00	109.34	617.17	601.96	599.37	597.65	598.00	596.99	20.18
517+50.00	109.35	617.50	602.30	599.44	598.30	598.12	597.64	19.86
517+81.58	109.35	617.82	602.62	599.47	598.93	598.64	598.26	19.56
517+97.00	109.45	617.97	602.80	599.47	599.23	598.90	598.56	19.41
518+00.00	104.69	618.00	602.84	599.47	599.22	598.95	598.55	19.45
518+19.27	99.81	618.19	603.10	599.48	599.13	599.27	598.47	19.73
518+21.05	99.36	618.21	603.12	599.48	599.17	599.28	598.50	19.71
518+27.35	99.36	618.27	603.20	599.30	599.30	599.62	598.63	19.64
518+50.00	99.37	618.50	603.50	598.32	599.48	599.44	597.65	20.85
518+53.01	99.37	618.53	603.54	598.19	599.46	599.37	597.53	21.00
518+95.98	99.38	618.96	604.25	599.21	599.21	599.06	598.55	20.41
519+00.00	99.38	619.00	604.32	599.31	599.19	599.03	598.52	20.48

NOTE:

1. Theoretical Top of NAW Elev., Theoretical Bottom of NAW Elev., Finished Grade Elev. at Front Face of NAW, and Finished Grade Elev. at Back Face of NAW shall be taken as straight lines in the segments between each pair of stations shown in the NAW Data Table.

BORING LOG NAW14-01

Wang Engineering
wangeng@wangeng.com
1145 N. Main Street
Lombard, IL 60148
Telephone: 630-953-9928
Fax: 630-953-9938

WEI Job No.: 7901-15-01
Client: TranSystems Corporation
Project: I-80 Reconstruction (Houbolt Rd to Center St)
Location: Will County, Illinois

Datum: NAVD 88
Elevation: 601.46 ft
North: 1759594.97 ft
East: 1031484.41 ft
Station: 472+13.99
Offset: 101.131 LT

Elevation (ft)	SOIL AND ROCK DESCRIPTION	Depth (ft)	Sample Type / recovery	Sample No.	SPT Values (blw/6 in)	Qu (tsf)	Moisture Content (%)
600.6	10-inch thick, dark brown SILTY CLAY LOAM --TOPSOIL--						
	Stiff to very stiff, brown SILTY CLAY, trace gravel; damp --FILL-- --RDR 2--			1	3 3 3	2.00 P	29
		5		2	3 4 5	1.23 B	18
595.2	Medium dense to very dense, brown SANDY GRAVEL; damp --RDR 3-4--			3	12 16 14	NP	9
		10		4	21 17 17	NP	6
				5	29 31 27	NP	5
		15		6	0 12 13	NP	5
				7	14 17 17	NP	4
581.5		20		8	22 18 19	NP	5
	Boring terminated at 20.00 ft						

GENERAL NOTES

Begin Drilling: 03-02-2023 Complete Drilling: 03-02-2023
Drilling Contractor: Wang Testing Services Drill Rig: 21D50A [84%]
Driller: KS&AP Logger: N. Karahalios Checked by: J. Bensen
Drilling Method: 2.25" IDA HSA; boring backfilled upon completion

WATER LEVEL DATA

While Drilling: DRY
At Completion of Drilling: DRY
Time After Drilling: NA
Depth to Water: NA

The stratification lines represent the approximate boundary between soil types; the actual transition may be gradual.

WANGENGINC 7901501.GPJ WANGENG.GDT 5/2/23

BORING LOG NAW14-02

Wang Engineering
wangeng@wangeng.com
1145 N. Main Street
Lombard, IL 60148
Telephone: 630-953-0028
Fax: 630-953-9938

WEI Job No.: 7901-15-01
Client: TranSystems Corporation
Project: I-80 Reconstruction (Houbolt Rd to Center St)
Location: Will County, Illinois

Datum: NAVD 88
Elevation: 596.75 ft
North: 1759741.87 ft
East: 1031626.49 ft
Station: 474+18.25
Offset: 94.278 LT

Elevation (ft)	SOIL AND ROCK DESCRIPTION	Depth (ft)	Sample Type / recovery	Sample No.	SPT Values (blw/6 in)	Qu (tsf)	Moisture Content (%)
596.0	9-inch thick, dark brown SILTY CLAY LOAM --TOPSOIL--						
	Medium stiff, brown SILTY CLAY, trace gravel; damp --FILL--			1	3 3 6	0.50 P	27
594.0	Very stiff, dark brown and black SILTY CLAY, trace organic matter; damp --Buried TOPSOIL--	5		2	3 3 4	2.00 P	37
590.1	Stiff to very stiff, brown SILTY CLAY to CLAY, trace gravel; moist			3	9 9 11	1.97 B	25
		10		4	3 5 6	2.46 B	25
586.2	Very soft, brown SILTY CLAY LOAM to SILTY LOAM, trace gravel; moist --RDR 2-- --L_L(%)=39, P_L(%)=17-- --%Gravel=6.3-- --%Sand=21.8-- --%Silt=49.7-- --%Clay=22.2-- --A-6 (14)--			5	4 6 3	< 0.25 P	33
		15		6	3 5 4	< 0.25 P	26
				7	4 4 5	< 0.25 P	15
577.8	Very stiff, brown SILTY CLAY, trace gravel; moist	20		8	8 4 50/4"	3.00 P	21
576.7	--RDR 2-- --Hit shale, but augered to 25' easily-- Boring terminated at 20.00 ft	25					
		30					
		35					
		40					

GENERAL NOTES

Begin Drilling: 03-02-2023 Complete Drilling: 03-02-2023
Drilling Contractor: Wang Testing Services Drill Rig: 21D50A [84%]
Driller: KS&AP Logger: N. Karahalios Checked by: J. Bensen
Drilling Method: 2.25" IDA HSA; boring backfilled upon completion

WATER LEVEL DATA

While Drilling: DRY
At Completion of Drilling: DRY
Time After Drilling: NA
Depth to Water: NA

The stratification lines represent the approximate boundary between soil types; the actual transition may be gradual.

WANGENGINC 7901501.GPJ WANGENG.GDT 5/2/23

BORING LOG NAW14-03

Wang Engineering
wangeng@wangeng.com
1145 N. Main Street
Lombard, IL 60148
Telephone: 630-953-0028
Fax: 630-953-9938

WEI Job No.: 7901-15-01
Client: TranSystems Corporation
Project: I-80 Reconstruction (Houbolt Rd to Center St)
Location: Will County, Illinois

Datum: NAVD 88
Elevation: 595.71 ft
North: 1759898.05 ft
East: 1031771.68 ft
Station: 476+31.46
Offset: 91.340 LT

Elevation (ft)	SOIL AND ROCK DESCRIPTION	Depth (ft)	Sample Type / recovery	Sample No.	SPT Values (blw/6 in)	Qu (tsf)	Moisture Content (%)
594.9	10-inch thick, dark brown SILTY CLAY LOAM --TOPSOIL--						
	Very stiff, brown SILTY CLAY, trace gravel; damp --FILL--			1	3 5 6	2.38 B	22
592.7	Stiff to very stiff, brown CLAY to SILTY CLAY, trace gravel; damp --RDR 2--	5		2	3 4 4	1.50 P	30
				3	2 2 2	2.00 P	26
		10		4	2 3 3	1.72 B	21
585.2	Medium dense, brown SANDY GRAVEL; damp --RDR 3--			5	3 5 7	NP	9
582.7	Medium dense, brown SANDY LOAM, little gravel; damp --RDR 3--	15		6	4 8 11	NP	11
580.2	Medium dense, brown SANDY GRAVEL; damp --RDR 3--			7	15 12 11	NP	6
575.7		20		8	13 14 13	NP	6
	Boring terminated at 20.00 ft						

GENERAL NOTES

Begin Drilling: 03-01-2023 Complete Drilling: 03-01-2023
Drilling Contractor: Wang Testing Services Drill Rig: 21D50A [84%]
Driller: KS&AP Logger: N. Karahalios Checked by: J. Bensen
Drilling Method: 2.25" IDA HSA; boring backfilled upon completion

WATER LEVEL DATA

While Drilling: DRY
At Completion of Drilling: DRY
Time After Drilling: NA
Depth to Water: NA

The stratification lines represent the approximate boundary between soil types; the actual transition may be gradual.

WANGENGINC 7901501.GPJ WANGENG.GDT 5/2/23

MODEL: BL_PR_I80 - Plan 3 [Sheet]
FILE NAME: pw://transystems-pw.bentley.com:transyscorp-pw1-hosted/Documents/Projects_2018/CH401/401180022/02-TransSystems/CAD/62R27/Sheets/23-Structural/Noise Walls/D162R27-SHT-NAW14-STRUCT-14

HBM ENGINEERING GROUP, LLC

USER NAME = lisa.buntin	DESIGNED - PG	REVISED -
	DRAWN - PG, AS	REVISED -
PLOT SCALE =	CHECKED - LAB, MAI	REVISED -
PLOT DATE = 8/10/2023	DATE - 6/26/23	REVISED -

STATE OF ILLINOIS
DEPARTMENT OF TRANSPORTATION

SOIL BORINGS 1
NOISE ABATEMENT WALL 14

SCALE: SHEET S4-16 OF S4-27 SHEETS STA. TO STA.

F.A.I. RTE.	SECTION	COUNTY	TOTAL SHEETS	SHEET NO.
I-80	FAI 80 21 STRUCTURE 6	WILL	898	639
		CONTRACT NO. 62R27		
	ILLINOIS	FED. AID PROJECT		

BORING LOG NAW14-04

Wang Engineering
wangeng@wangeng.com
1145 N. Main Street
Lombard, IL 60148
Telephone: 630-953-9928
Fax: 630-953-9938

WEI Job No.: 7901-15-01
Client: TranSystems Corporation
Project: I-80 Reconstruction (Houbolt Rd to Center St)
Location: Will County, Illinois

Datum: NAVD 88
Elevation: 596.10 ft
North: 1760054.16 ft
East: 1031919.60 ft
Station: 478+46.47
Offset: 86.333 LT

Elevation (ft)	SOIL AND ROCK DESCRIPTION	Depth (ft)	Sample No.	SPT Values (blw/6 in)	Qu (tsf)	Moisture Content (%)
595.6	6-inch thick, dark brown SILTY CLAY LOAM --TOPSOIL--					
	Stiff, brown CLAY; damp		1	11 9 6	1.00 P	42
593.1	Loose to medium dense, brown, medium SAND, trace gravel; damp to moist --RDR 3--	5	2	4 4 4	NP	11
			3	8 6 6	NP	2
		10	4	1 4 4	NP	20
			5	5 5 7	NP	10
583.1	Medium dense to very dense, brown SANDY GRAVEL; damp to wet	15	6	5 5 6	NP	14
			7	23 21 24	NP	6
576.1		20	8	26 32 33	NP	10

Boring terminated at 20.00 ft

GENERAL NOTES

Begin Drilling: 02-28-2023 Complete Drilling: 02-28-2023
Drilling Contractor: Wang Testing Services Drill Rig: 21D50A [84%]
Driller: KS&AP Logger: N. Karahalios Checked by: J. Bensen
Drilling Method: 2.25" IDA HSA; boring backfilled upon completion

WATER LEVEL DATA

While Drilling: 18.50 ft
At Completion of Drilling: DRY
Time After Drilling: NA
Depth to Water: NA

The stratification lines represent the approximate boundary between soil types; the actual transition may be gradual.

BORING LOG NAW14-05

Wang Engineering
wangeng@wangeng.com
1145 N. Main Street
Lombard, IL 60148
Telephone: 630-953-0028
Fax: 630-953-9938

WEI Job No.: 7901-15-01
Client: TranSystems Corporation
Project: I-80 Reconstruction (Houbolt Rd to Center St)
Location: Will County, Illinois

Datum: NAVD 88
Elevation: 601.95 ft
North: 1759904.87 ft
East: 1031823.50 ft
Station: 476+71.28
Offset: 57.483 LT

Elevation (ft)	SOIL AND ROCK DESCRIPTION	Depth (ft)	Sample No.	SPT Values (blw/6 in)	Qu (tsf)	Moisture Content (%)
	16-inch thick ASPHALT					
600.6	Stiff to hard, brown SILTY CLAY to SILTY CLAY LOAM, trace gravel; damp --FILL-- --RDR 2--		1	6 5 6	1.00 P	24
		5	2	1 3 10	4.50 P	17
			3	4 6 9	4.50 P	17
593.9	Stiff to hard, brown SILTY CLAY to CLAY, trace gravel; damp --RDR 2--	10	4	3 5 8	4.50 P	29
			5	6 7 7	3.53 B	25
		15	6	3 3 2	1.48 B	26
586.4	Medium dense, brown SANDY GRAVEL; damp --RDR 3--		7	3 6 7	NP	12
581.9		20	8	14 12 12	NP	6

Boring terminated at 20.00 ft

GENERAL NOTES

Begin Drilling: 03-01-2023 Complete Drilling: 03-01-2023
Drilling Contractor: Wang Testing Services Drill Rig: 21D50A [84%]
Driller: KS&AP Logger: N. Karahalios Checked by: J. Bensen
Drilling Method: 2.25" IDA HSA; boring backfilled upon completion

WATER LEVEL DATA

While Drilling: DRY
At Completion of Drilling: DRY
Time After Drilling: NA
Depth to Water: NA

The stratification lines represent the approximate boundary between soil types; the actual transition may be gradual.

BORING LOG NAW14-06

Wang Engineering
wangeng@wangeng.com
1145 N. Main Street
Lombard, IL 60148
Telephone: 630-953-0028
Fax: 630-953-9938

WEI Job No.: 7901-15-01
Client: TranSystems Corporation
Project: I-80 Reconstruction (Houbolt Rd to Center St)
Location: Will County, Illinois

Datum: NAVD 88
Elevation: 600.76 ft
North: 1760069.90 ft
East: 1031969.68 ft
Station: 478+91.73
Offset: 59.740 LT

Elevation (ft)	SOIL AND ROCK DESCRIPTION	Depth (ft)	Sample No.	SPT Values (blw/6 in)	Qu (tsf)	Moisture Content (%)
	14-inch thick ASPHALT --PAVEMENT--					
599.6	Stiff to very stiff, brown, dark brown and gray CLAY LOAM, trace gravel; damp --FILL-- --RDR 2--		1	6 6 7	3.00 P	23
		5	2	4 3 5	1.50 P	23
595.3	Stiff to very stiff, brown SILTY CLAY to CLAY, trace gravel; damp --RDR 2-3--		3	5 6 7	2.46 B	25
		10	4	4 3 4	1.48 S	25
			5	5 10 27	2.21 B	20
588.4	Medium dense to very dense, brown SANDY GRAVEL; damp to moist --RDR 2--	15	6	14 25 35	NP	5
			7	14 17 24	NP	5
580.8		20	8	14 11 14	NP	10

Boring terminated at 20.00 ft

GENERAL NOTES

Begin Drilling: 03-01-2023 Complete Drilling: 03-01-2023
Drilling Contractor: Wang Testing Services Drill Rig: 21D50A [84%]
Driller: KS&AP Logger: N. Karahalios Checked by: J. Bensen
Drilling Method: 2.25" IDA HSA; boring backfilled upon completion

WATER LEVEL DATA

While Drilling: DRY
At Completion of Drilling: DRY
Time After Drilling: NA
Depth to Water: NA

The stratification lines represent the approximate boundary between soil types; the actual transition may be gradual.

WANGENGINC 7901150 1.GPJ WANGENG.GDT 5/2/23
MODEL: BL_PR_I80 - Plan 3 [Sheet]
FILE NAME: pw://transystems-pw.bentley.com:transyscom-pw1-hosted/Documents/Projects_2018/CH401/401180022/02-TranSystems/CAD/62R27/Sheets/23-Structural/Noise Walls/D162R27-SHT-NAW14-STRUCT-15

HBM ENGINEERING GROUP, LLC

USER NAME = lisa.buntin	DESIGNED - PG	REVISED -
	DRAWN - PG, AS	REVISED -
PLOT SCALE =	CHECKED - LAB, MAI	REVISED -
PLOT DATE = 8/10/2023	DATE - 6/26/23	REVISED -

STATE OF ILLINOIS
DEPARTMENT OF TRANSPORTATION

SOIL BORINGS 2
NOISE ABATEMENT WALL 14

SCALE: SHEET S4-17 OF S4-27 SHEETS STA. TO STA.

F.A.I. RTE.	SECTION	COUNTY	TOTAL SHEETS	SHEET NO.
I-80	FAI 80 21 STRUCTURE 6	WILL	898	640
		CONTRACT NO. 62R27		
	ILLINOIS	FED. AID PROJECT		

Wang Engineering
wangeng@wangeng.com
1145 N. Main Street
Lombard, IL 60148
Telephone: 630-953-9928
Fax: 630-953-9938

BORING LOG NAW14-07

WEI Job No.: 7901-15-01

Client: **TranSystems Corporation**
Project: **I-80 Reconstruction (Houbolt Rd to Center St)**
Location: **Will County, Illinois**

Datum: NAVD 88
Elevation: 599.34 ft
North: 1760238.46 ft
East: 1032114.15 ft
Station: 481+13.65
Offset: 65.649 LT

Elevation (ft)	SOIL AND ROCK DESCRIPTION	Sample No.	SPT Values (blw/6 in)	Qu (tsf)	Moisture Content (%)
598.8	6-inch thick, brown SILTY CLAY LOAM, little gravel --TOPSOIL--				
	Very stiff to hard, brown SILTY CLAY, trace gravel; damp --FILL-- --RDR 2-3--	1	6 6 7	4.02 B	18
5		2	6 7 10	5.49 B	17
593.1	--Qu: 2.50P-- Medium dense to dense, brown SANDY GRAVEL; damp --FILL-- --RDR 3--	3	19 17 11	NP	5
10		4	13 10 19	NP	5
		5	15 11 10	NP	5
586.3	Very stiff to hard, gray SILTY CLAY to SILTY CLAY LOAM, trace gravel; damp --RDR 2--	6	7 8 9	3.12 B	14
15		7	5 7 12	5.25 B	18
579.3		8	7 10 13	4.26 B	16
20	Boring terminated at 20.00 ft				

GENERAL NOTES

Begin Drilling: 03-22-2023 Complete Drilling: 03-22-2023
Drilling Contractor: Wang Testing Services Drill Rig: 21D50A [84%]
Driller: KS&AP Logger: N. Karahalios Checked by: J. Bensen
Drilling Method: 2.25" IDA HSA; boring backfilled upon completion

WATER LEVEL DATA

While Drilling: DRY
At Completion of Drilling: DRY
Time After Drilling: NA
Depth to Water: NA

The stratification lines represent the approximate boundary between soil types; the actual transition may be gradual.

Wang Engineering
wangeng@wangeng.com
1145 N. Main Street
Lombard, IL 60148
Telephone: 630-953-0028
Fax: 630-953-9938

BORING LOG NAW14-08

WEI Job No.: 7901-15-01

Client: **TranSystems Corporation**
Project: **I-80 Reconstruction (Houbolt Rd to Center St)**
Location: **Will County, Illinois**

Datum: NAVD 88
Elevation: 596.58 ft
North: 1760119.30 ft
East: 1031984.47 ft
Station: 479+38.29
Offset: 81.909 LT

Elevation (ft)	SOIL AND ROCK DESCRIPTION	Sample No.	SPT Values (blw/6 in)	Qu (tsf)	Moisture Content (%)
	12-inch thick, dark brown SILTY CLAY				
595.6	--TOPSOIL-- Stiff to very stiff, dark brown to brown SILTY CLAY --RDR 2--	1	2 2 4	1.00 P	26
5		2	3 4 4	2.05 B	24
591.1	Medium stiff, brown LOAM, trace gravel; damp --RDR 2--	3	2 4 11	0.50 P	21
588.6	Dense, brown SANDY GRAVEL; damp --RDR 2--	4	15 17 19	NP	7
10					
586.1	Dense, brown SAND, little to some gravel; damp --RDR 2-3--	5	13 20 18	NP	10
582.3	Medium dense, brown SANDY GRAVEL; saturated	6	10 14 19	NR	
15		7	7 7 9	NP	16
578.6	Medium dense, brown, medium SAND, trace gravel; saturated --RDR 2--	8	9 14 11	NP	24
576.6	Boring terminated at 20.00 ft				
20					

GENERAL NOTES

Begin Drilling: 02-28-2023 Complete Drilling: 02-28-2023
Drilling Contractor: Wang Testing Services Drill Rig: 21D50A [84%]
Driller: KS&AP Logger: N. Karahalios Checked by: J. Bensen
Drilling Method: 2.25" IDA HSA to 10 ft; mud rotary thereafter; boring backfilled upon completion

WATER LEVEL DATA

While Drilling: 16.00 ft
At Completion of Drilling: cave in @ 18'
Time After Drilling: NA
Depth to Water: NA

The stratification lines represent the approximate boundary between soil types; the actual transition may be gradual.

Wang Engineering
wangeng@wangeng.com
1145 N. Main Street
Lombard, IL 60148
Telephone: 630-953-0028
Fax: 630-953-9938

BORING LOG NAW14-09

WEI Job No.: 7901-15-01

Client: **TranSystems Corporation**
Project: **I-80 Reconstruction (Houbolt Rd to Center St)**
Location: **Will County, Illinois**

Datum: NAVD 88
Elevation: 596.64 ft
North: 1760277.74 ft
East: 1032126.57 ft
Station: 481+51.12
Offset: 82.779 LT

Elevation (ft)	SOIL AND ROCK DESCRIPTION	Sample No.	SPT Values (blw/6 in)	Qu (tsf)	Moisture Content (%)
596.1	6-inch thick, dark brown SILTY CLAY LOAM --TOPSOIL--				
	Very stiff, brown to gray SILTY CLAY, trace gravel; damp --RDR 2--	1	6 6 9	2.95 B	20
5		2	4 5 8	2.71 B	16
		3	5 8 17	3.36 B	16
507.0	Dense, brown SANDY GRAVEL; damp --RDR 2-3--	4	14 25 23	NP	4
10 586.1	Dense, brown SAND, little gravel; damp	5	17 24 16	NP	5
583.6	Medium dense, brown SANDY GRAVEL; moist to saturated --RDR 2--	6	5 7 7	NP	17
15 581.1	Medium dense, brown SAND; saturated --RDR 2--	7	4 6 7	2.30 B	19
580.0	Very stiff, gray SILTY CLAY, trace gravel; damp --RDR 2--	8	5 20 19	3.69 B	16
576.6	Boring terminated at 20.00 ft				
20					

GENERAL NOTES

Begin Drilling: 02-28-2023 Complete Drilling: 02-28-2023
Drilling Contractor: Wang Testing Services Drill Rig: 21D50A [84%]
Driller: KS&AP Logger: N. Karahalios Checked by: J. Bensen
Drilling Method: 2.25" IDA HSA to 10 ft; mud rotary thereafter; boring backfilled upon completion

WATER LEVEL DATA

While Drilling: 14.50 ft
At Completion of Drilling: mud in borehole
Time After Drilling: NA
Depth to Water: NA

The stratification lines represent the approximate boundary between soil types; the actual transition may be gradual.

HBM ENGINEERING GROUP, LLC

USER NAME = lisa.buntin	DESIGNED - PG	REVISED -
	DRAWN - PG, AS	REVISED -
PLOT SCALE =	CHECKED - LAB, MAI	REVISED -
PLOT DATE = 8/10/2023	DATE - 6/26/23	REVISED -

STATE OF ILLINOIS
DEPARTMENT OF TRANSPORTATION

SOIL BORINGS 3
NOISE ABATEMENT WALL 14

SCALE: SHEET S4-18 OF S4-27 SHEETS STA. TO STA.

F.A.I. RTE.	SECTION	COUNTY	TOTAL SHEETS	SHEET NO.
I-80	FAI 80 21 STRUCTURE 6	WILL	898	641
		CONTRACT NO. 62R27		
	ILLINOIS	FED. AID PROJECT		

BORING LOG NAW14-10

Page 1 of 1

Wang Engineering
wangeng@wangeng.com
1145 N. Main Street
Lombard, IL 60148
Telephone: 630-953-9928
Fax: 630-953-9938

WEI Job No.: 7901-15-01
Client: TranSystems Corporation
Project: I-80 Reconstruction (Houbolt Rd to Center St)
Location: Will County, Illinois

Datum: NAVD 88
Elevation: 596.10 ft
North: 1760435.47 ft
East: 1032268.28 ft
Station: 483+63.15
Offset: 83.461 LT

Elevation (ft)	SOIL AND ROCK DESCRIPTION	Sample Type	Sample No.	SPT Values (blw/6 in)	Qu (tsf)	Moisture Content (%)
596.5	7-inch thick, dark brown SILTY CLAY LOAM --TOPSOIL--					
	Very stiff to hard, brown SILTY CLAY, trace gravel; damp --RDR 2--		1	7 8 10	3.20 S	19
5			2	3 7 7	3.64 B	16
			3	5 6 7	4.92 B	21
587.3	Medium dense, brown SANDY GRAVEL; damp --RDR 2--		4	13 13 16	NP	6
10						
585.6	Medium dense, brown SANDY GRAVEL; wet --RDR 2--		5	11 11 13	NP	8
15			6	14 10 10	NP	13
579.3	Very stiff, gray SILTY CLAY, trace gravel; damp --RDR 2--		7	6 6 9	NR	
20			8	8 7 10	2.00 P	20
576.1	Boring terminated at 20.00 ft					

GENERAL NOTES

Begin Drilling: 02-28-2023 Complete Drilling: 02-28-2023
Drilling Contractor: Wang Testing Services Drill Rig: 21D50A [84%]
Driller: KS&AP Logger: N. Karahalios Checked by: J. Bensen
Drilling Method: 2.25" IDA HSA to 10 ft; mud rotary thereafter; boring backfilled upon completion

WATER LEVEL DATA

While Drilling: 11.00 ft
At Completion of Drilling: cave in @ 13'
Time After Drilling: NA
Depth to Water: NA

The stratification lines represent the approximate boundary between soil types; the actual transition may be gradual.

BORING LOG NAW14-11

Page 1 of 1

Wang Engineering
wangeng@wangeng.com
1145 N. Main Street
Lombard, IL 60148
Telephone: 630-953-0028
Fax: 630-953-9938

WEI Job No.: 7901-15-01
Client: TranSystems Corporation
Project: I-80 Reconstruction (Houbolt Rd to Center St)
Location: Will County, Illinois

Datum: NAVD 88
Elevation: 594.52 ft
North: 1760594.80 ft
East: 1032414.11 ft
Station: 485+79.14
Offset: 82.166 LT

Elevation (ft)	SOIL AND ROCK DESCRIPTION	Sample Type	Sample No.	SPT Values (blw/6 in)	Qu (tsf)	Moisture Content (%)
589.9	8-inch thick TOPSOIL					
	Stiff to very stiff, brown to gray SILTY CLAY, trace gravel; damp --RDR 2--		1	5 6 8	1.39 B	16
5			2	4 6 10	3.94 B	17
			3	4 7 8	2.05 S	24
586.5	Dense, brown SANDY LOAM, little gravel; damp --RDR 2--		4	13 17 18	NP	6
10						
584.0	Medium dense, gray GRAVEL; wet --RDR 2--		5	14 16 13	NP	5
581.5	Very stiff to hard, gray SILTY CLAY, trace gravel; damp --RDR 2--		6	6 9 12	3.69 B	19
15						
			7	6 9 13	4.43 B	17
576.5	Medium dense, gray SILT; saturated --RDR 2--		8	7 8 6	NP	18
20						
574.5	Boring terminated at 20.00 ft					

GENERAL NOTES

Begin Drilling: 02-28-2023 Complete Drilling: 02-28-2023
Drilling Contractor: Wang Testing Services Drill Rig: 21D50A [84%]
Driller: KS&AP Logger: N. Karahalios Checked by: J. Bensen
Drilling Method: 2.25" IDA HSA; boring backfilled upon completion

WATER LEVEL DATA

While Drilling: 11.00 ft
At Completion of Drilling: 19.00 ft
Time After Drilling: NA
Depth to Water: NA

The stratification lines represent the approximate boundary between soil types; the actual transition may be gradual.

BORING LOG NAW14-12

Page 1 of 1

Wang Engineering
wangeng@wangeng.com
1145 N. Main Street
Lombard, IL 60148
Telephone: 630-953-0028
Fax: 630-953-9938

WEI Job No.: 7901-15-01
Client: TranSystems Corporation
Project: I-80 Reconstruction (Houbolt Rd to Center St)
Location: Will County, Illinois

Datum: NAVD 88
Elevation: 594.26 ft
North: 1760750.18 ft
East: 1032553.44 ft
Station: 487+87.85
Offset: 83.042 LT

Elevation (ft)	SOIL AND ROCK DESCRIPTION	Sample Type	Sample No.	SPT Values (blw/6 in)	Qu (tsf)	Moisture Content (%)
593.8	6-inch thick, dark brown SILTY CLAY LOAM --TOPSOIL--					
	Very stiff to hard, brown to gray SILTY CLAY to SILTY CLAY LOAM, trace gravel; damp --RDR 2--		1	9 7 8	2.21 B	15
5			2	8 8 11	4.10 S	17
			3	5 8 11	4.51 B	16
585.1	Dense, brown SILT; moist --RDR 2--		4	6 15 15	3.03 B	14
10						
583.8	Medium dense to dense, brown, coarse SAND; moist to wet --RDR 2--		5	7 13 18	NP	15
15			6	2 10 10	NP	19
578.8	Hard, gray SILTY CLAY, trace gravel; damp --RDR 2--		7	7 10 15	4.43 B	17
574.9	Medium dense, gray SILT; wet		8	8 8 7	NP	20
20						
574.3	Boring terminated at 20.00 ft					

GENERAL NOTES

Begin Drilling: 02-28-2023 Complete Drilling: 02-28-2023
Drilling Contractor: Wang Testing Services Drill Rig: 21D50A [84%]
Driller: KS&AP Logger: N. Karahalios Checked by: J. Bensen
Drilling Method: 2.25" IDA HSA; boring backfilled upon completion

WATER LEVEL DATA

While Drilling: 13.50 ft
At Completion of Drilling: 19.00 ft
Time After Drilling: NA
Depth to Water: NA

The stratification lines represent the approximate boundary between soil types; the actual transition may be gradual.

BORING LOG NAW14-13

Wang Engineering
wangeng@wangeng.com
1145 N. Main Street
Lombard, IL 60148
Telephone: 630-953-9928
Fax: 630-953-9938

WEI Job No.: 7901-15-01
Client: TranSystems Corporation
Project: I-80 Reconstruction (Houbolt Rd to Center St)
Location: Will County, Illinois

Datum: NAVD 88
Elevation: 592.31 ft
North: 1760913.05 ft
East: 1032686.83 ft
Station: 489+98.11
Offset: 93.341 LT

Elevation (ft)	SOIL AND ROCK DESCRIPTION	Depth (ft)	Sample Type / recovery	Sample No.	SPT Values (blw/6 in)	Qu (tsf)	Moisture Content (%)
	14-inch thick, dark brown SILTY CLAY LOAM						
591.1	--TOPSOIL--						
	Stiff to very stiff, brown SILTY CLAY to CLAY, trace gravel; damp --RDR 2--			1	1 3 5	2.50 P	23
		5		2	3 4 7	1.23 S	25
586.8	Medium dense, brown SANDY GRAVEL; damp --RDR 2--			3	24 13 10	NP	6
583.1	Very stiff, gray SILTY CLAY, trace gravel; damp --RDR 2-3--	10		4	9 9 10	NR	
	--wet spoon--			5	9 10 10	2.50 P	18
		15		6	6 9 19	3.20 B	16
576.8	Dense to very dense, gray SANDY GRAVEL; wet to saturated			7	25 41 25	NP	5
572.3		20		8	11 18 24	NP	7

Profile	Elevation (ft)	SOIL AND ROCK DESCRIPTION	Depth (ft)	Sample Type / recovery	Sample No.	SPT Values (blw/6 in)	Qu (tsf)	Moisture Content (%)
		--AUGER REFUSAL-- Boring terminated at 20.00 ft	25 / 30 / 35 / 40					

GENERAL NOTES

Begin Drilling: 02-24-2023 Complete Drilling: 02-24-2023
Drilling Contractor: Wang Testing Services Drill Rig: 21D50A [84%]
Driller: KS&AP Logger: N. Karahalios Checked by: J. Bensen
Drilling Method: 2.25" IDA HSA; boring backfilled upon completion

WATER LEVEL DATA

While Drilling: 12.00 ft
At Completion of Drilling: DRY
Time After Drilling: NA
Depth to Water: NA

The stratification lines represent the approximate boundary between soil types; the actual transition may be gradual.

BORING LOG NAW14-14

Wang Engineering
wangeng@wangeng.com
1145 N. Main Street
Lombard, IL 60148
Telephone: 630-953-9928
Fax: 630-953-9938

WEI Job No.: 7901-15-01
Client: TranSystems Corporation
Project: I-80 Reconstruction (Houbolt Rd to Center St)
Location: Will County, Illinois

Datum: NAVD 88
Elevation: 589.48 ft
North: 1761060.46 ft
East: 1032815.81 ft
Station: 491+93.96
Offset: 96.545 LT

Elevation (ft)	SOIL AND ROCK DESCRIPTION	Depth (ft)	Sample Type / recovery	Sample No.	SPT Values (blw/6 in)	Qu (tsf)	Moisture Content (%)
588.6	10-inch thick, dark brown SILTY CLAY LOAM						
	--TOPSOIL--						
	Medium stiff, brown CLAY LOAM, trace gravel; damp --FILL--			1	2 2 3	0.74 B	12
586.6	Hard, brown SILTY CLAY, trace gravel; damp --RDR 2--	5		2	5 6 5	4.00 P	20
584.0	Hard, brown SANDY LOAM to LOAM, trace gravel; wet --RDR 2--			3	18 13 11	4.50 P	14
580.2	Stiff, gray SILTY CLAY, trace gravel; damp --RDR 3--	10		4	13 13 13	NR	
577.5	Gray SANDY GRAVEL; wet --RDR 3--			5	15 26 19	1.89 B	17
576.5	Soft, gray SILTY CLAY LOAM, trace gravel; damp to moist --RDR 2-3--	15		6	4 3 6	0.41 B	20
573.2	Very dense, gray SANDY GRAVEL; saturated --RDR 3--			7	42 32 31	NP	7
	--Weathered BEDROCK--			8	26 50/3"	NP	6
569.5		20					

Profile	Elevation (ft)	SOIL AND ROCK DESCRIPTION	Depth (ft)	Sample Type / recovery	Sample No.	SPT Values (blw/6 in)	Qu (tsf)	Moisture Content (%)
		--AUGER REFUSAL-- Boring terminated at 20.00 ft	25 / 30 / 35 / 40					

GENERAL NOTES

Begin Drilling: 02-24-2023 Complete Drilling: 02-24-2023
Drilling Contractor: Wang Testing Services Drill Rig: 21D50A [84%]
Driller: KS&AP Logger: N. Karahalios Checked by: J. Bensen
Drilling Method: 2.25" IDA HSA to 10 ft; mud rotary thereafter; boring backfilled upon completion

WATER LEVEL DATA

While Drilling: 6.00 ft
At Completion of Drilling: mud in borehole
Time After Drilling: NA
Depth to Water: NA

The stratification lines represent the approximate boundary between soil types; the actual transition may be gradual.

BORING LOG NAW14-15

Wang Engineering
wangeng@wangeng.com
1145 N. Main Street
Lombard, IL 60148
Telephone: 630-953-9928
Fax: 630-953-9938

WEI Job No.: 7901-15-01
Client: TranSystems Corporation
Project: I-80 Reconstruction (Houbolt Rd to Center St)
Location: Will County, Illinois

Datum: NAVD 88
Elevation: 588.77 ft
North: 1761217.50 ft
East: 1032952.53 ft
Station: 494+02.13
Offset: 100.467 LT

Elevation (ft)	SOIL AND ROCK DESCRIPTION	Depth (ft)	Sample Type / recovery	Sample No.	SPT Values (blw/6 in)	Qu (tsf)	Moisture Content (%)
	14-inch thick, dark brown SILTY CLAY to SILTY CLAY LOAM						
587.6	--TOPSOIL--						
	Loose, brown SANDY LOAM, trace gravel; wet --RDR 2--			1	2 2 4	NP	18
585.9	Hard, brown to gray SILTY CLAY, trace gravel; damp --RDR 2--	5		2	3 5 6	4.92 B	23
				3	10 9 10	6.97 B	21
		10		4	4 8 11	6.48 B	14
578.3	Loose, gray Gravelly SAND; wet --RDR 2--			5	9 3 3	NP	15
576.5	Very stiff (2.0P), gray SILTY CLAY; damp						
575.8	Gray, coarse SAND; wet						
575.0	Very dense, gray SILT; saturated --RDR 2--	15		6	14 29 28	NP	22
574.2	Stiff, gray SILTY CLAY LOAM to SILTY LOAM, little gravel; moist to wet --RDR 2-3--			7	7 12 50/5"	1.89 B	10
570.8	Very dense, gray GRAVEL --Weathered BEDROCK--			8	50/3"	NP	6
570.0	--AUGER REFUSAL-- Boring terminated at 18.75 ft	20					

Profile	Elevation (ft)	SOIL AND ROCK DESCRIPTION	Depth (ft)	Sample Type / recovery	Sample No.	SPT Values (blw/6 in)	Qu (tsf)	Moisture Content (%)

GENERAL NOTES

Begin Drilling: 02-24-2023 Complete Drilling: 02-24-2023
Drilling Contractor: Wang Testing Services Drill Rig: 21D50A [84%]
Driller: KS&AP Logger: N. Karahalios Checked by: J. Bensen
Drilling Method: 2.25" IDA HSA to 10 ft; mud rotary thereafter; boring backfilled upon completion

WATER LEVEL DATA

While Drilling: 1.00 ft
At Completion of Drilling: mud in borehole
Time After Drilling: NA
Depth to Water: NA

The stratification lines represent the approximate boundary between soil types; the actual transition may be gradual.

HBM ENGINEERING GROUP, LLC

USER NAME = lisa.buntin	DESIGNED - PG	REVISED -	
	DRAWN - PG, AS	REVISED -	
PLOT SCALE =	CHECKED - LAB, MAI	REVISED -	
PLOT DATE = 8/10/2023	DATE - 6/26/23	REVISED -	

STATE OF ILLINOIS
DEPARTMENT OF TRANSPORTATION

SOIL BORINGS 5
NOISE ABATEMENT WALL 14

SCALE: SHEET S4-20 OF S4-27 SHEETS STA. TO STA.

F.A.I. RTE.	SECTION	COUNTY	TOTAL SHEETS	SHEET NO.
I-80	FAI 80 21 STRUCTURE 6	WILL	898	643
		CONTRACT NO. 62R27		
	ILLINOIS	FED. AID PROJECT		

BORING LOG NAW14-20

Wang Engineering
wangeng@wangeng.com
1145 N. Main Street
Lombard, IL 60148
Telephone: 630-953-9928
Fax: 630-953-9938

WEI Job No.: 7901-15-01
Client: TranSystems Corporation
Project: I-80 Reconstruction (Houbolt Rd to Center St)
Location: Will County, Illinois

Datum: NAVD 88
Elevation: 590.83 ft
North: 1761318.71 ft
East: 1033063.82 ft
Station: 495+51.85
Offset: 85.814 LT

Elevation (ft)	SOIL AND ROCK DESCRIPTION	Depth (ft)	Sample Type / recovery	Sample No.	SPT Values (blw/6 in)	Qu (tsf)	Moisture Content (%)
589.8	12-inch thick, dark brown SILTY CLAY LOAM --TOPSOIL--						
	Stiff to very stiff, black and brown CLAY LOAM, trace gravel; damp --FILL-- --RDR 2--			1	3 4 4	1.80 B	26
		5		2	4 4 0	2.05 B	25
585.3	Very stiff to hard, brown SILTY CLAY, trace gravel; damp --RDR 2--			3	7 8 9	7.38 S	19
		10		4	4 0 12	3.07 B	19
				5	10 9 25	5.33 B	16
577.8	Medium dense, gray SANDY GRAVEL; wet --RDR 2-3--	15		6	0 13 14	NP	8
574.1	Hard, gray SILTY CLAY LOAM to SILTY LOAM, trace gravel; damp --RDR 2--			7	8 8 10	NR	
570.8	Boring terminated at 20.00 ft	20		8	6 10 15	4.00 P	11

GENERAL NOTES

Begin Drilling: 03-20-2023 Complete Drilling: 03-20-2023
Drilling Contractor: Wang Testing Services Drill Rig: 21D50A [84%]
Driller: KS&AP Logger: N. Karahalios Checked by: J. Bensen
Drilling Method: 2.25" IDA HSA; boring backfilled upon completion

WATER LEVEL DATA

While Drilling: 13.50 ft
At Completion of Drilling: 16.00 ft
Time After Drilling: NA
Depth to Water: NA

The stratification lines represent the approximate boundary between soil types; the actual transition may be gradual.

BORING LOG NAW14-21

Wang Engineering
wangeng@wangeng.com
1145 N. Main Street
Lombard, IL 60148
Telephone: 630-953-0028
Fax: 630-953-9938

WEI Job No.: 7901-15-01
Client: TranSystems Corporation
Project: I-80 Reconstruction (Houbolt Rd to Center St)
Location: Will County, Illinois

Datum: NAVD 88
Elevation: 588.98 ft
North: 1761482.91 ft
East: 1033193.63 ft
Station: 497+60.70
Offset: 99.663 LT

Elevation (ft)	SOIL AND ROCK DESCRIPTION	Depth (ft)	Sample Type / recovery	Sample No.	SPT Values (blw/6 in)	Qu (tsf)	Moisture Content (%)
588.3	8-inch thick, dark brown SILTY CLAY LOAM --TOPSOIL--						
	Very stiff to hard, brown SILTY CLAY, trace gravel; damp --RDR 2--			1	7 8 10	4.50 P	17
584.5	Brown SANDY LOAM; wet --RDR 2--	5		2	4 3 3	2.13 B	19
582.8	Very stiff, gray SILTY CLAY, trace gravel; damp to moist --RDR 2--			3	6 7 10	3.28 B	19
		10		4	4 8 8	3.53 B	17
				5	25 23 24	2.50 P	20
576.0	Very stiff, gray SILTY CLAY LOAM to SILTY LOAM, trace gravel; damp	15		6	10 8 17	2.50 P	11
573.5	Medium dense to very dense, gray GRAVEL; wet --Weathered BEDROCK--			7	15 12 12	NP	11
570.2	Boring terminated at 18.80 ft	20		8	50/4"	NP	5

GENERAL NOTES

Begin Drilling: 02-21-2023 Complete Drilling: 02-21-2023
Drilling Contractor: Wang Testing Services Drill Rig: 21D50A [84%]
Driller: KS&AP Logger: N. Karahalios Checked by: J. Bensen
Drilling Method: 2.25" IDA HSA; boring backfilled upon completion

WATER LEVEL DATA

While Drilling: 4.50 ft
At Completion of Drilling: 15.00 ft
Time After Drilling: NA
Depth to Water: NA

The stratification lines represent the approximate boundary between soil types; the actual transition may be gradual.

BORING LOG NAW14-22

Wang Engineering
wangeng@wangeng.com
1145 N. Main Street
Lombard, IL 60148
Telephone: 630-953-0028
Fax: 630-953-9938

WEI Job No.: 7901-15-01
Client: TranSystems Corporation
Project: I-80 Reconstruction (Houbolt Rd to Center St)
Location: Will County, Illinois

Datum: NAVD 88
Elevation: 594.58 ft
North: 1761611.64 ft
East: 1033339.51 ft
Station: 499+54.03
Offset: 77.807 LT

Elevation (ft)	SOIL AND ROCK DESCRIPTION	Depth (ft)	Sample Type / recovery	Sample No.	SPT Values (blw/6 in)	Qu (tsf)	Moisture Content (%)
593.6	12-inch thick, dark brown SILTY CLAY LOAM --TOPSOIL--						
	Very stiff, dark brown SILTY CLAY, trace gravel; damp --FILL--			1	3 3 3	3.00 P	25
591.6	Stiff to hard, brown and gray SILTY CLAY, trace gravel; damp --RDR 2-3--	5		2	3 5 7	3.53 B	23
				3	4 6 6	3.44 B	20
		10		4	3 3 5	1.48 B	26
				5	6 7 11	6.31 B	20
579.7	Gray SILT; saturated --RDR 3--	15		6	5 8 12	4.26 B	18
579.1	Dense, gray SANDY GRAVEL; saturated --RDR 3--			7	5 14 19	NP	9
576.6	Gray, coarse SAND; saturated --RDR 3--						
575.9	Very stiff, gray SILTY CLAY LOAM; trace gravel; damp	20		8	5 7 7	3.00 P	13
	--RDR 3-- Boring terminated at 20.00 ft	25					
		30					
		35					
574.6		40					

GENERAL NOTES

Begin Drilling: 03-20-2023 Complete Drilling: 03-20-2023
Drilling Contractor: Wang Testing Services Drill Rig: 21D50A [84%]
Driller: KS&AP Logger: N. Karahalios Checked by: J. Bensen
Drilling Method: 2.25" IDA HSA; boring backfilled upon completion

WATER LEVEL DATA

While Drilling: 14.80 ft
At Completion of Drilling: 19.00 ft
Time After Drilling: NA
Depth to Water: NA

The stratification lines represent the approximate boundary between soil types; the actual transition may be gradual.

HBM ENGINEERING GROUP, LLC

USER NAME = llsa.buntin	DESIGNED - PG	REVISED -
	DRAWN - PG, AS	REVISED -
PLOT SCALE =	CHECKED - LAB, MAI	REVISED -
PLOT DATE = 8/10/2023	DATE - 6/26/23	REVISED -

STATE OF ILLINOIS
DEPARTMENT OF TRANSPORTATION

SOIL BORINGS 6
NOISE ABATEMENT WALL 14

SCALE: SHEET S4-21 OF S4-27 SHEETS STA. TO STA.

F.A.I. RTE.	SECTION	COUNTY	TOTAL SHEETS	SHEET NO.
I-80	FAI 80 21 STRUCTURE 6	WILL	898	644
		CONTRACT NO. 62R27		
	ILLINOIS	FED. AID PROJECT		

BORING LOG NAW14-23

Wang Engineering
wangeng@wangeng.com
1145 N. Main Street
Lombard, IL 60148
Telephone: 630-953-9928
Fax: 630-953-9938

WEI Job No.: 7901-15-01
Client: TranSystems Corporation
Project: I-80 Reconstruction (Houbolt Rd to Center St)
Location: Will County, Illinois

Datum: NAVD 88
Elevation: 592.02 ft
North: 1761770.72 ft
East: 1033467.66 ft
Station: 501+57.47
Offset: 89.584 LT

Elevation (ft)	SOIL AND ROCK DESCRIPTION	Sample No.	SPT Values (blw/6 in)	Qu (tsf)	Moisture Content (%)
591.4	8-inch thick, dark brown SILTY CLAY LOAM --TOPSOIL--				
	Stiff, brown CLAY to SILTY CLAY, trace gravel; damp --RDR 2--	1	3 3 5	1.23 B	30
		2	3 3 3	1.23 B	29
586.5	Hard, brown and gray SILTY CLAY, trace gravel; damp --2-inch sandy loam lens; wet-- --RDR 2--	3	3 5 8	4.92 B	22
		4	4 7 8	4.84 S	20
		5	5 9 14	5.41 B	18
578.2	Gray SILT; saturated --RDR 2--	6	11 18 19	NP	19
577.8	Dense, gray SANDY GRAVEL; saturated --RDR 2--	7	9 10 9	NR	
575.3	Very dense, gray SILT; saturated --RDR 2--	8	13 27 39	NP	15
572.0	Boring terminated at 20.00 ft				

Depth (ft): 5, 10, 15, 20

GENERAL NOTES

Begin Drilling: 02-21-2023 Complete Drilling: 02-21-2023
Drilling Contractor: Wang Testing Services Drill Rig: 21D50A [84%]
Driller: KS&AP Logger: N. Karahalios Checked by: J. Bensen
Drilling Method: 2.25" IDA HSA; boring backfilled upon completion

WATER LEVEL DATA

While Drilling: 6.50 ft
At Completion of Drilling: 12.00 ft
Time After Drilling: NA
Depth to Water: NA

The stratification lines represent the approximate boundary between soil types; the actual transition may be gradual.

BORING LOG NAW14-24

Wang Engineering
wangeng@wangeng.com
1145 N. Main Street
Lombard, IL 60148
Telephone: 630-953-0028
Fax: 630-953-9938

WEI Job No.: 7901-15-01
Client: TranSystems Corporation
Project: I-80 Reconstruction (Houbolt Rd to Center St)
Location: Will County, Illinois

Datum: NAVD 88
Elevation: 595.26 ft
North: 1761911.63 ft
East: 1033611.52 ft
Station: 503+56.68
Offset: 80.855 LT

Elevation (ft)	SOIL AND ROCK DESCRIPTION	Sample No.	SPT Values (blw/6 in)	Qu (tsf)	Moisture Content (%)
594.3	12-inch thick, dark brown SILTY CLAY LOAM --TOPSOIL--				
	Stiff to very stiff, brown SILTY CLAY, trace gravel; damp --RDR 2--	1	7 7 7	1.50 P	21
		2	5 5 6	2.95 S	24
589.2	Loose, brown SANDY LOAM; wet --RDR 2--	3	3 3 4	NP	16
586.5	Hard, brown SILTY CLAY, trace gravel; damp	4	5 5 5	4.43 B	20
585.8	Brown SANDY LOAM; damp				
584.8	Very stiff to hard, brown SILTY CLAY, trace gravel; damp --RDR 2--	5	7 9 12	4.18 B	20
		6	7 12 14	3.00 P	20
579.8	Medium dense, brown SANDY LOAM, little gravel; saturated --RDR 2--	7	7 9 17	NP	17
577.3	Very stiff, gray SILTY CLAY LOAM, trace gravel; damp --RDR 2--	8	6 6 8	3.03 B	14
575.3	Boring terminated at 20.00 ft				

Depth (ft): 5, 10, 15, 20

GENERAL NOTES

Begin Drilling: 03-20-2023 Complete Drilling: 03-20-2023
Drilling Contractor: Wang Testing Services Drill Rig: 21D50A [84%]
Driller: KS&AP Logger: N. Karahalios Checked by: J. Bensen
Drilling Method: 2.25" IDA HSA; boring backfilled upon completion

WATER LEVEL DATA

While Drilling: 6.10 ft
At Completion of Drilling: 19.00 ft
Time After Drilling: NA
Depth to Water: NA

The stratification lines represent the approximate boundary between soil types; the actual transition may be gradual.

BORING LOG NAW14-25

Wang Engineering
wangeng@wangeng.com
1145 N. Main Street
Lombard, IL 60148
Telephone: 630-953-0028
Fax: 630-953-9938

WEI Job No.: 7901-15-01
Client: TranSystems Corporation
Project: I-80 Reconstruction (Houbolt Rd to Center St)
Location: Will County, Illinois

Datum: NAVD 88
Elevation: 593.54 ft
North: 1762056.02 ft
East: 1033740.09 ft
Station: 505+47.91
Offset: 90.051 LT

Elevation (ft)	SOIL AND ROCK DESCRIPTION	Sample No.	SPT Values (blw/6 in)	Qu (tsf)	Moisture Content (%)
593.0	6-inch thick, dark brown SILTY CLAY LOAM --TOPSOIL--				
	--wet spoon recovery-- Stiff to hard, brown to gray SILTY CLAY, trace gravel; damp to moist --RDR 2-3--	1	2 3 2	1.06 B	32
		2	3 5 5	4.84 B	21
		3	4 4 6	2.87 B	20
		4	3 4 5	3.50 P	18
		5	4 7 11	3.77 B	20
579.7	Gray SILT; saturated	6	14 15 14	NP	11
579.5	Medium dense, gray SANDY GRAVEL; saturated --RDR 2-3--				
578.0	Dense to very dense, brown, coarse SAND, trace gravel; saturated --RDR 3-4--	7	6 18 20	NP	21
574.0	--AUGER REFUSAL--	8	9 50/5"	NP	21
	Boring terminated at 19.50 ft				

Depth (ft): 5, 10, 15, 20; 25, 30, 35, 40

GENERAL NOTES

Begin Drilling: 02-21-2023 Complete Drilling: 02-21-2023
Drilling Contractor: Wang Testing Services Drill Rig: 21D50A [84%]
Driller: KS&AP Logger: N. Karahalios Checked by: J. Bensen
Drilling Method: 2.25" IDA HSA; boring backfilled upon completion

WATER LEVEL DATA

While Drilling: 1.00 ft
At Completion of Drilling: DRY
Time After Drilling: NA
Depth to Water: NA

The stratification lines represent the approximate boundary between soil types; the actual transition may be gradual.

HBM ENGINEERING GROUP, LLC

USER NAME = lisa.buntin	DESIGNED - PG	REVISED -	
	DRAWN - PG, AS	REVISED -	
PLOT SCALE =	CHECKED - LAB, MAI	REVISED -	
PLOT DATE = 8/10/2023	DATE - 6/26/23	REVISED -	

STATE OF ILLINOIS
DEPARTMENT OF TRANSPORTATION

SOIL BORINGS 7
NOISE ABATEMENT WALL 14

SCALE: | SHEET S4-22 OF S4-27 SHEETS | STA. | TO STA.

F.A.I. RTE.	SECTION	COUNTY	TOTAL SHEETS	SHEET NO.
I-80	FAI 80 21 STRUCTURE 6	WILL	898	645
		CONTRACT NO. 62R27		
		ILLINOIS	FED. AID PROJECT	

Wang Engineering

wangeng@wangeng.com
1145 N. Main Street
Lombard, IL 60148
Telephone: 630-953-9928
Fax: 630-953-9938

BORING LOG NAW14-26

WEI Job No.: 7901-15-01

Client: **TranSystems Corporation**
Project: **I-80 Reconstruction (Houbolt Rd to Center St)**
Location: **Will County, Illinois**

Datum: NAVD 88
Elevation: 592.16 ft
North: 1762200.00 ft
East: 1033874.54 ft
Station: 507+42.55
Offset: 99.182 LT

Elevation (ft)	SOIL AND ROCK DESCRIPTION	Depth (ft)	Sample Type / recovery	Sample No.	SPT Values (blw/6 in)	Qu (tsf)	Moisture Content (%)
591.5	8-inch thick, dark brown SILTY CLAY --TOPSOIL--						
	Very stiff, brown and gray SILTY CLAY, trace gravel; damp --FILL--			1	5 6 10	3.61 S	21
589.2	Very stiff to hard, brown to gray SILTY CLAY, trace gravel; damp --RDR 2--	5		2	5 7 9	4.35 B	21
				3	6 10 12	5.17 B	20
		10		4	7 9 14	4.26 B	19
				5	5 12 14	2.95 B	20
577.2	Boring terminated at 15.00 ft	15		6	14 23 26	2.50 P	20
		20					

GENERAL NOTES

Begin Drilling: 02-20-2023 Complete Drilling: 02-20-2023
Drilling Contractor: Wang Testing Services Drill Rig: 21D50A [84%]
Driller: KS&AP Logger: N. Karahalios Checked by: J. Bensen
Drilling Method: 2.25" IDA HSA; boring backfilled upon completion

WATER LEVEL DATA

While Drilling: 0.00 ft
At Completion of Drilling: 14.00 ft
Time After Drilling: NA
Depth to Water: NA

The stratification lines represent the approximate boundary between soil types; the actual transition may be gradual.

WANGENGINC 7901501.GPJ WANGENG.GDT 5/2/23

Wang Engineering

wangeng@wangeng.com
1145 N. Main Street
Lombard, IL 60148
Telephone: 630-953-0028
Fax: 630-953-9938

BORING LOG NAW14-27

WEI Job No.: 7901-15-01

Client: **TranSystems Corporation**
Project: **I-80 Reconstruction (Houbolt Rd to Center St)**
Location: **Will County, Illinois**

Datum: NAVD 88
Elevation: 592.77 ft
North: 1762341.72 ft
East: 1034032.21 ft
Station: 509+52.15
Offset: 95.451 LT

Elevation (ft)	SOIL AND ROCK DESCRIPTION	Depth (ft)	Sample Type / recovery	Sample No.	SPT Values (blw/6 in)	Qu (tsf)	Moisture Content (%)
592.3	6-inch thick, dark brown SILTY CLAY LOAM --TOPSOIL--						
	Medium stiff to very stiff, black, brown and gray CLAY, trace gravel; damp to moist --RDR 2--			1	3 4 5	0.90 B	30
		5		2	2 2 2	0.50 P	31
				3	3 4 5	2.21 B	36
584.8	Very stiff, brown to gray SILTY CLAY, trace gravel; damp --RDR 2--						
		10		4	6 6 7	3.77 B	19
				5	5 6 10	2.62 B	18
				6	4 7 10	2.87 B	21
577.8	Boring terminated at 15.00 ft	15					
		20					

GENERAL NOTES

Begin Drilling: 02-20-2023 Complete Drilling: 02-20-2023
Drilling Contractor: Wang Testing Services Drill Rig: 21D50A [84%]
Driller: KS&AP Logger: N. Karahalios Checked by: J. Bensen
Drilling Method: 2.25" IDA HSA; boring backfilled upon completion

WATER LEVEL DATA

While Drilling: 0.00 ft
At Completion of Drilling: 13.00 ft
Time After Drilling: NA
Depth to Water: NA

The stratification lines represent the approximate boundary between soil types; the actual transition may be gradual.

WANGENGINC 7901501.GPJ WANGENG.GDT 5/2/23

Wang Engineering

wangeng@wangeng.com
1145 N. Main Street
Lombard, IL 60148
Telephone: 630-953-0028
Fax: 630-953-9938

BORING LOG NAW14-28

WEI Job No.: 7901-15-01

Client: **TranSystems Corporation**
Project: **I-80 Reconstruction (Houbolt Rd to Center St)**
Location: **Will County, Illinois**

Datum: NAVD 88
Elevation: 593.68 ft
North: 1762466.40 ft
East: 1034177.13 ft
Station: 511+41.24
Offset: 92.372 LT

Elevation (ft)	SOIL AND ROCK DESCRIPTION	Depth (ft)	Sample Type / recovery	Sample No.	SPT Values (blw/6 in)	Qu (tsf)	Moisture Content (%)
593.2	6-inch thick, dark brown SILTY CLAY LOAM --TOPSOIL--						
	Very stiff to hard, brown and gray SILTY CLAY, trace gravel; damp --RDR 2--			1	5 7 10	6.31 B	22
		5		2	4 7 10	4.76 B	18
				3	6 8 11	5.33 B	18
		10		4	7 8 10	4.92 B	19
				5	3 7 9	2.87 B	21
580.7	Gray SILT; saturated						
579.7	Medium dense, gray, fine SAND, trace gravel; saturated			6	11 10 7	NP	20
578.7	Boring terminated at 15.00 ft	15					
		20					

GENERAL NOTES

Begin Drilling: 02-20-2023 Complete Drilling: 02-20-2023
Drilling Contractor: Wang Testing Services Drill Rig: 21D50A [84%]
Driller: KS&AP Logger: N. Karahalios Checked by: J. Bensen
Drilling Method: 2.25" IDA HSA; boring backfilled upon completion

WATER LEVEL DATA

While Drilling: 0.00 ft
At Completion of Drilling: 13.00 ft
Time After Drilling: NA
Depth to Water: NA

The stratification lines represent the approximate boundary between soil types; the actual transition may be gradual.

WANGENGINC 7901501.GPJ WANGENG.GDT 5/2/23

MODEL: BL_PR_I80 - Plan 3 [Sheet]
FILE NAME: pw://transystems-pw.bentley.com:transyscorp-pw1-hosted/Documents/Projects_2018/CH401/401180022/02-TranSystems/CAD/62R27/Sheets/23-Structural/Noise Walls/D162R27-SHT-NAW14-STRUCT-23

HBM ENGINEERING GROUP, LLC

USER NAME = lisa.buntin	DESIGNED - PG	REVISED -
	DRAWN - PG, AS	REVISED -
PLOT SCALE =	CHECKED - LAB, MAI	REVISED -
PLOT DATE = 8/10/2023	DATE - 6/26/23	REVISED -

STATE OF ILLINOIS
DEPARTMENT OF TRANSPORTATION

SOIL BORINGS 8
NOISE ABATEMENT WALL 14

SCALE: | SHEET S4-23 OF S4-27 SHEETS | STA. | TO STA.

F.A.I. RTE.	SECTION	COUNTY	TOTAL SHEETS	SHEET NO.
I-80	FAI 80 21 STRUCTURE 6	WILL	898	646
		CONTRACT NO. 62R27		
		ILLINOIS FED. AID PROJECT		

Wang Engineering
wangeng@wangeng.com
1145 N. Main Street
Lombard, IL 60148
Telephone: 630-953-9928
Fax: 630-953-9938

BORING LOG NAW14-29

WEI Job No.: 7901-15-01

Client: **TranSystems Corporation**
Project: **I-80 Reconstruction (Houbolt Rd to Center St)**
Location: **Will County, Illinois**

Datum: NAVD 88
Elevation: 595.82 ft
North: 1762598.61 ft
East: 1034341.82 ft
Station: 513+50.19
Offset: 86.660 LT

Profile	Elevation (ft)	SOIL AND ROCK DESCRIPTION	Depth (ft)	Sample Type / recovery	Sample No.	SPT Values (blw/6 in)	Qu (tsf)	Moisture Content (%)
	595.4	5-inch thick, dark brown SILTY CLAY LOAM --TOPSOIL--						
		Very loose, brown SANDY LOAM, trace gravel; saturated --FILL--			1	2 1 2	NP	28
	592.8	Very stiff to hard, brown to gray SILTY CLAY, trace gravel; damp --RDR 2--	5		2	4 5 7	3.00 P	17
					3	5 8 8	2.87 S	18
			10		4	4 5 7	2.62 B	16
					5	4 5 7	2.13 B	22
	581.7	Medium dense, brown and gray SANDY GRAVEL; saturated	15		6	9 10 17	> 4.50 P	20
	580.8	Boring terminated at 15.00 ft						
			20					

GENERAL NOTES

Begin Drilling: 02-20-2023 Complete Drilling: 02-20-2023
Drilling Contractor: Wang Testing Services Drill Rig: 21D50A [84%]
Driller: KS&AP Logger: N. Karahalios Checked by: J. Bensen
Drilling Method: 2.25" IDA HSA; boring backfilled upon completion

WATER LEVEL DATA

While Drilling: 0.00 ft
At Completion of Drilling: 15.00 ft
Time After Drilling: NA
Depth to Water: NA

The stratification lines represent the approximate boundary between soil types; the actual transition may be gradual.

Wang Engineering
wangeng@wangeng.com
1145 N. Main Street
Lombard, IL 60148
Telephone: 630-953-9928
Fax: 630-953-9938

BORING LOG NAW14-30

WEI Job No.: 7901-15-01

Client: **TranSystems Corporation**
Project: **I-80 Reconstruction (Houbolt Rd to Center St)**
Location: **Will County, Illinois**

Datum: NAVD 88
Elevation: 597.70 ft
North: 1762731.76 ft
East: 1034491.06 ft
Station: 515+47.85
Offset: 96.391 LT

Profile	Elevation (ft)	SOIL AND ROCK DESCRIPTION	Depth (ft)	Sample Type / recovery	Sample No.	SPT Values (blw/6 in)	Qu (tsf)	Moisture Content (%)
	597.2	6-inch thick, dark brown SILTY CLAY LOAM --TOPSOIL--						
		Stiff, brown and gray CLAY, trace gravel; damp --RDR 2--			1	3 3 6	1.80 B	56
			5		2	2 2 2	1.56 B	30
	591.0	--2-inch sand lens; wet-- Stiff to very stiff, brown to gray SILTY CLAY, trace gravel; damp --RDR 2--			3	3 4 6	2.87 B	27
		--sand lenses; wet--	10		4	4 6 7	3.85 B	20
					5	4 6 6	2.38 B	21
	582.7	Boring terminated at 15.00 ft	15		6	3 4 5	1.64 B	23
			20					

GENERAL NOTES

Begin Drilling: 02-20-2023 Complete Drilling: 02-20-2023
Drilling Contractor: Wang Testing Services Drill Rig: 21D50A [84%]
Driller: KS&AP Logger: N. Karahalios Checked by: J. Bensen
Drilling Method: 2.25" IDA HSA; boring backfilled upon completion

WATER LEVEL DATA

While Drilling: 6.50 ft
At Completion of Drilling: 13.00 ft
Time After Drilling: NA
Depth to Water: NA

The stratification lines represent the approximate boundary between soil types; the actual transition may be gradual.

HBM ENGINEERING GROUP, LLC

USER NAME = lisa.buntin	DESIGNED - PG	REVISED -
	DRAWN - PG, AS	REVISED -
PLOT SCALE =	CHECKED - LAB, MAI	REVISED -
PLOT DATE = 8/10/2023	DATE - 6/26/23	REVISED -

STATE OF ILLINOIS
DEPARTMENT OF TRANSPORTATION

SOIL BORINGS 9
NOISE ABATEMENT WALL 14

SCALE: SHEET S4-24 OF S4-27 SHEETS STA. TO STA.

F.A.I. RTE.	SECTION	COUNTY	TOTAL SHEETS	SHEET NO.
I-80	FAI 80 21 STRUCTURE 6	WILL	898	647
		CONTRACT NO. 62R27		
	ILLINOIS	FED. AID PROJECT		

Wang Engineering
wangeng@wangeng.com
1145 N. Main Street
Lombard, IL 60148
Telephone: 630-953-9928
Fax: 630-953-9938

BORING LOG NAW14-31

WEI Job No.: 7901-15-01

Client: **TranSystems Corporation**
Project: **I-80 Reconstruction (Houbolt Rd to Center St)**
Location: **Will County, Illinois**

Datum: NAVD 88
Elevation: 598.70 ft
North: 1762836.66 ft
East: 1034645.52 ft
Station: 517+32.27
Offset: 85.004 LT

Elevation (ft)	SOIL AND ROCK DESCRIPTION	Sample No.	SPT Values (blw/6 in)	Qu (tsf)	Moisture Content (%)
598.4	3-inch thick, dark brown SILTY CLAY LOAM --TOPSOIL--				
	Stiff, brown and gray CLAY to SILTY CLAY, trace gravel; damp	1	3 4 4	1.48 B	28
595.7	--RDR 2--				
	Hard, brown to gray SILTY CLAY, trace gravel; damp --RDR 2--	2	3 4 6	4.43 B	21
		3	7 9 13	6.15 B	19
		4	9 10 13	5.82 B	15
		5	5 9 13	5.66 B	16
585.7	Medium dense, brown SILT, trace gravel; saturated --RDR 2--	6	7 6 8	NP	23
583.7	Boring terminated at 15.00 ft				

Depth (ft): 5, 10, 15, 20

GENERAL NOTES

Begin Drilling: 02-20-2023 Complete Drilling: 02-20-2023
Drilling Contractor: Wang Testing Services Drill Rig: 21D50A [84%]
Driller: KS&AP Logger: N. Karahalios Checked by: J. Bensen
Drilling Method: 2.25" IDA HSA; boring backfilled upon completion

WATER LEVEL DATA

While Drilling: 13.00 ft
At Completion of Drilling: 14.00 ft
Time After Drilling: NA
Depth to Water: NA

The stratification lines represent the approximate boundary between soil types; the actual transition may be gradual.

Wang Engineering
wangeng@wangeng.com
1145 N. Main Street
Lombard, IL 60148
Telephone: 630-953-9928
Fax: 630-953-9938

BORING LOG NAW14-32

WEI Job No.: 7901-15-01

Client: **TranSystems Corporation**
Project: **I-80 Reconstruction (Houbolt Rd to Center St)**
Location: **Will County, Illinois**

Datum: NAVD 88
Elevation: 603.32 ft
North: 1762947.23 ft
East: 1034804.03 ft
Station: 519+23.65
Offset: 79.856 LT

Elevation (ft)	SOIL AND ROCK DESCRIPTION	Sample No.	SPT Values (blw/6 in)	Qu (tsf)	Moisture Content (%)
603.0	4-inch thick, dark brown SILTY CLAY LOAM --TOPSOIL--				
	Very stiff to hard, brown SILTY CLAY, trace gravel; damp --RDR 2--	1	4 5 5	2.00 P	19
		2	4 4 4	2.38 B	26
		3	5 6 9	4.76 B	18
		4	4 6 8	4.51 S	18
		5	5 7 9	3.61 B	19
588.3		6	7 7 10	3.94 B	23
	Boring terminated at 15.00 ft				

Depth (ft): 5, 10, 15, 20

GENERAL NOTES

Begin Drilling: 02-20-2023 Complete Drilling: 02-20-2023
Drilling Contractor: Wang Testing Services Drill Rig: 21D50A [84%]
Driller: KS&AP Logger: N. Karahalios Checked by: J. Bensen
Drilling Method: 2.25" IDA HSA; boring backfilled upon completion

WATER LEVEL DATA

While Drilling: DRY
At Completion of Drilling: DRY
Time After Drilling: NA
Depth to Water: NA

The stratification lines represent the approximate boundary between soil types; the actual transition may be gradual.

Wang Engineering
wangeng@wangeng.com
1145 N. Main Street
Lombard, IL 60148
Telephone: 630-953-9928
Fax: 630-953-9938

BORING LOG NAW14-33

WEI Job No.: 7901-15-01

Client: **TranSystems Corporation**
Project: **I-80 Reconstruction (Houbolt Rd to Center St)**
Location: **Will County, Illinois**

Datum: NAVD 88
Elevation: 603.80 ft
North: 1762862.66 ft
East: 1034709.61 ft
Station: 517+98.57
Offset: 67.380 LT

Profile	Elevation (ft)	SOIL AND ROCK DESCRIPTION	Depth (ft)	Sample Type / recovery	Sample No.	SPT Values (blw/6 in)	Qu (tsf)	Moisture Content (%)
	603.3	6-inch thick, dark brown SILTY CLAY LOAM, little gravel --TOPSOIL--						
		Stiff to very stiff, brown SILTY CLAY, trace gravel; damp --FILL-- --RDR 2--			1	3 4 5	1.50 P	20
			5		2	3 4 4	1.00 P	28
	597.0				3	3 3 3	2.13 B	27
		Loose to medium dense, brown SAND, trace gravel; wet --RDR 2--						
			10		4	4 3 7	NP	21
	593.3	Very stiff, brown to gray SILTY CLAY, trace gravel; damp --RDR 2--			5	5 5 7	3.20 B	20
	588.8		15		6	5 8 8	2.95 B	19
		Boring terminated at 15.00 ft						
			20					

GENERAL NOTES

Begin Drilling: **02-20-2023** Complete Drilling: **02-20-2023**
Drilling Contractor: **Wang Testing Services** Drill Rig: **21D50A [84%]**
Driller: **KS&AP** Logger: **N. Karahalios** Checked by: **J. Bensen**
Drilling Method: **2.25" IDA HSA; boring backfilled upon completion**

WATER LEVEL DATA

While Drilling: **6.83 ft**
At Completion of Drilling: **12.00 ft**
Time After Drilling: **NA**
Depth to Water: **NA**

The stratification lines represent the approximate boundary between soil types; the actual transition may be gradual.

WANGENGINC 79011501.GPJ WANGENG.GDT 5/2/23

MODEL: BL_PR_I80 - Plan 3 [Sheet]
FILE NAME: pw://transystems-pw.bentley.com:transyscorp-pw2-hosted/Documents/Projects_2018/CH401/401180022/02-TranSystems/CAD/62R27/Sheets/23-Structural/Noise Walls/D162R27-SHT-NAW14-STRUCT-24

HBM ENGINEERING GROUP, LLC

USER NAME = lisa.buntin	DESIGNED - PG	REVISED -	
	DRAWN - PG, AS	REVISED -	
PLOT SCALE =	CHECKED - LAB, MAI	REVISED -	
PLOT DATE = 8/10/2023	DATE - 6/26/23	REVISED -	

STATE OF ILLINOIS
DEPARTMENT OF TRANSPORTATION

SOIL BORINGS 11
NOISE ABATEMENT WALL 14

SCALE: | SHEET S4-26 OF S4-27 SHEETS | STA. | TO STA.

F.A.I. RTE.	SECTION	COUNTY	TOTAL SHEETS	SHEET NO.
I-80	FAI 80 21 STRUCTURE 6	WILL	898	649
		CONTRACT NO. 62R27		
	ILLINOIS	FED. AID PROJECT		

NOTES:
1. EACH SIDE OF THE NOISE WALL PANELS SHALL HAVE A ROLLED ASHLAR STONE FINISH. THE FINISH SHALL HAVE A 1 ½" RELIEF FOR NOISE ABATEMENT WALL, GROUND MOUNTED AND A ¾" RELIEF FOR NOISE ABATEMENT WALL, STRUCTURE MOUNTED. THE COLOR OF BOTH SIDES OF THE PANELS, PLAIN BAND, POSTS AND ALL OTHER VISIBLE ELEMENTS SHALL FOLLOW THE SPECIAL PROVISIONS.

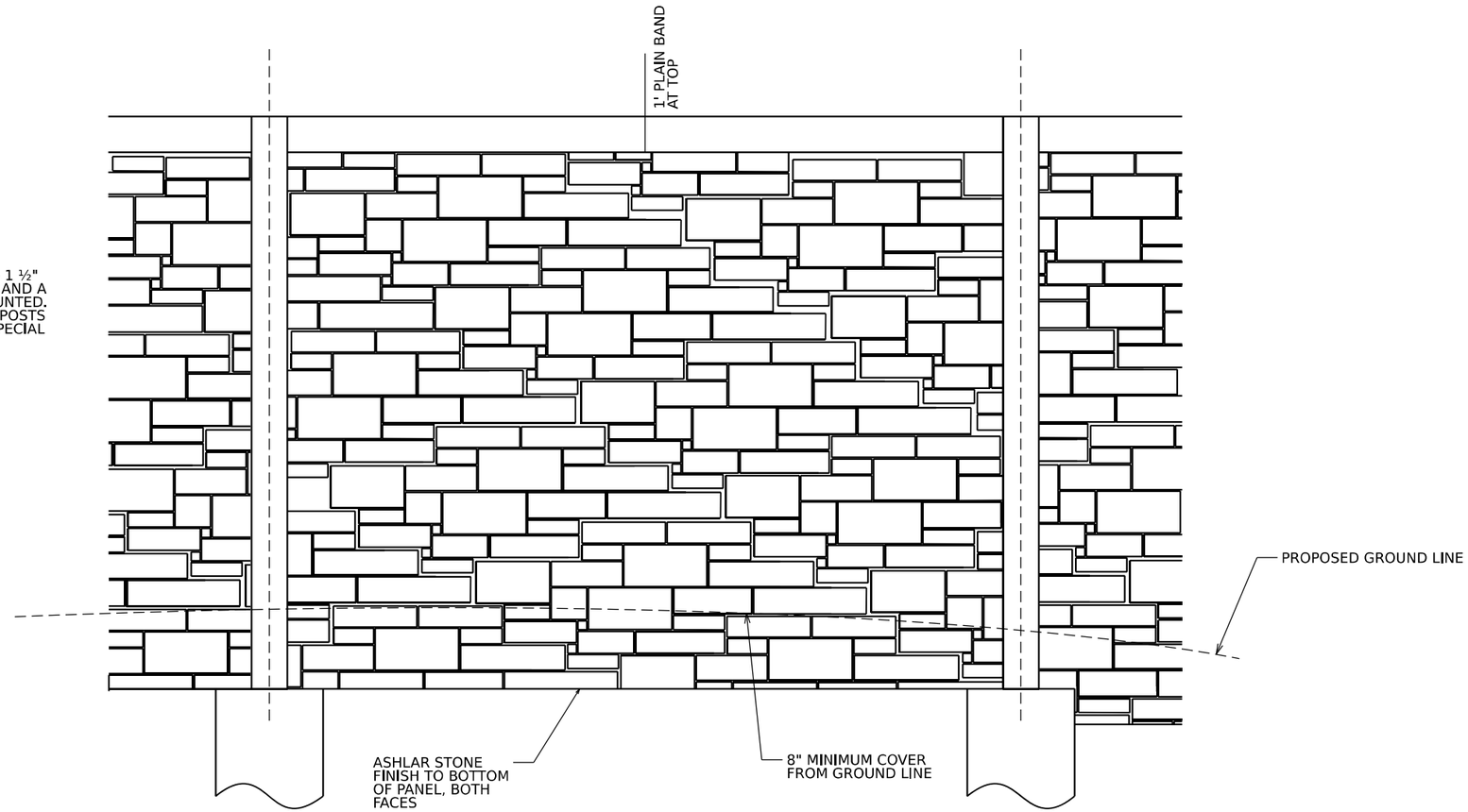

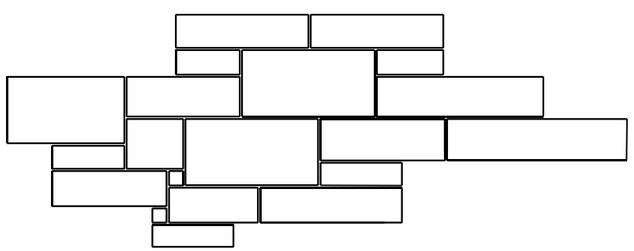

STONE PATTERN SIZES:
3" x 3" - 14" x 28"

ENLARGED PATTERN DETAIL

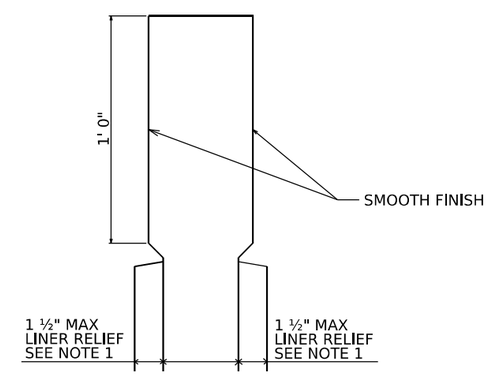

ENLARGED CAP DETAIL

MODEL: NAW14 DET
FILE NAME: pw://transystems-pw.bentley.com:transyscorp-pw1-hosted/Documents/Projects_2018/CH401/401180022/02-TransSystems/CAD/62R27/Sheets/24-Noise Abatement Walls/Noise Walls Details

TRANSYSTEMS	USER NAME = lisa.buntin	DESIGNED - VLJ	REVISED -	STATE OF ILLINOIS DEPARTMENT OF TRANSPORTATION	ASHLAR STONE FINISH NOISE ABATEMENT WALL 14		F.A.I. RTE.	SECTION	COUNTY	TOTAL SHEETS / SHEET NO.
		DRAWN - AMK	REVISED -				I-80	FAI 80 21 STRUCTURE 6	WILL	898 / 650
	PLOT SCALE =	CHECKED - JMG	REVISED -						CONTRACT NO. 62R27	
	PLOT DATE = 8/10/2023	DATE - 6/26/23	REVISED -		SCALE: NONE	SHEET S4-27 OF S4-27 SHEETS / STA. TO STA.		ILLINOIS	FED. AID PROJECT	

Benchmark: Mag nail on pavement of outside shoulder of WB I-80, approximately 55' from the headwall in the median at Station 478+86.23, Offset 62.35' LT, Elev. 600.750. See Alignment, Tie and Benchmark Sheets.

ABBREVIATIONS

Exp.	Expansion
Jt.	Joint
PGL	Profile Grade Line
Lt.	Left
Rt.	Right
Spa.	Space
Sta.	Station
Elev.	Elevation
Typ.	Typical
F.F.	Front Face
B.F.	Back Face
E.E.	Each End

DESIGN SPECIFICATIONS

2020 AASHTO LRFD Bridge Design Specifications, 9th Edition

Illinois Department of Transportation Bridge Manual, January 2023

Illinois Department of Transportation ABD Memorandum 22.7, November 2022

DESIGN STRESSES

FIELD UNITS

f'c = 4,000 psi (Concrete)
fy = 60,000 psi (Reinforcement)

DESIGN LOADS

Overturning and Sliding (Static)
106k

Strength (Dynamic)
260k

CONSTRUCTION SPECIFICATIONS

Illinois Department of Transportation Guide Bridge Special Provisions (GBSPs)

Illinois Department of Transportation Supplemental Specifications and Recurring Special Provisions, January 1, 2023

Illinois Department of Transportation Standard Specifications for Road and Bridge Construction, January 1, 2022

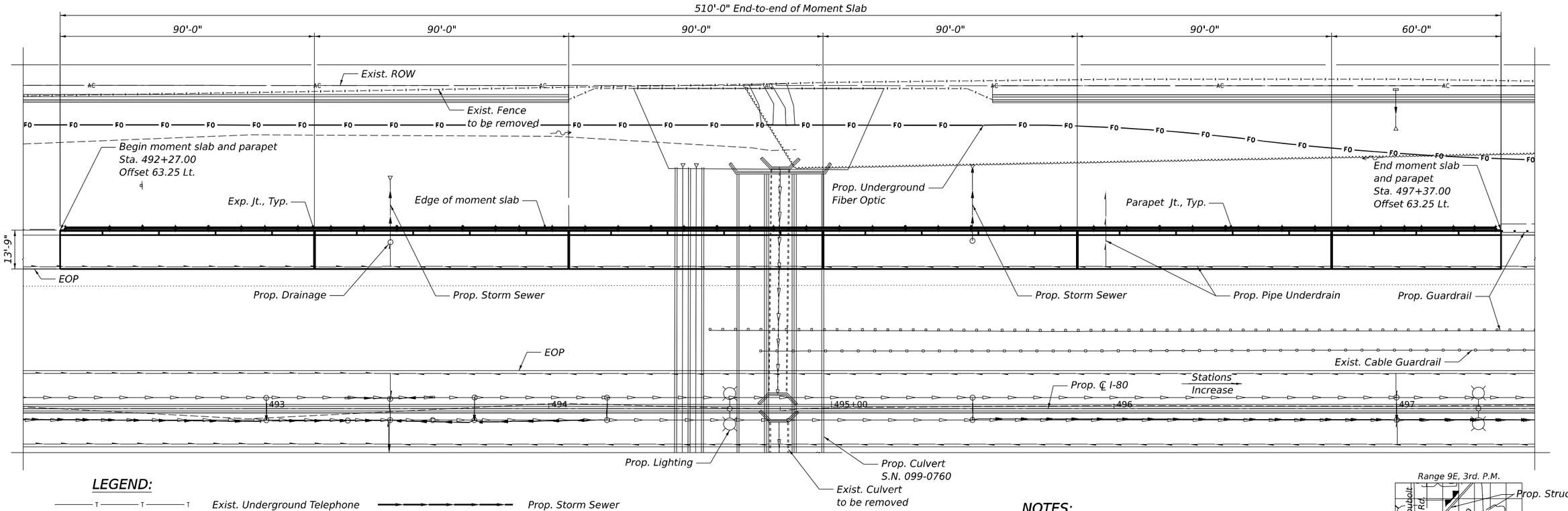

PLAN

LEGEND:

Exist. Underground Telephone	Prop. Storm Sewer
Exist. Underground Electric	Prop. Guardrail
Prop. Underground Electric	Exist. Guardrail
Prop. Lighting Cable	Exist. Fence
Exist. Underground Gas	Exist. Access Control & ROW
Exist. Aerial Line	Exist. Cable Barrier
Exist. Underground Fiber Optic	Exist. Lighting.
Prop. Underground Fiber Optic	Prop. Lighting
Exist. Underground Cable	Prop. Drainage
Exist. Pipe Underdrain	Prop. Concrete Headwall
Prop. Pipe Underdrain	Soil Boring
Exist. Storm Sewer	

NOTES:

1. For General Notes, Index of Sheets, Total Bill of Material, see Sheet S5-2 .
2. Stations and offsets are measured along ℄ I-80 to outside edge of moment slab.

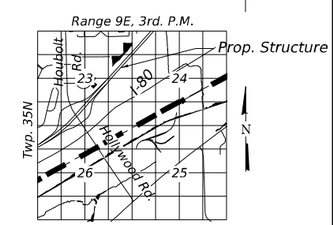

LOCATION SKETCH

APPROVED
For Structural Adequacy Only
Engineer of Bridges & Structures

STATE OF ILLINOIS
MOUSSA A. ISSA
081-005738
CHICAGO, ILLINOIS
LICENSED STRUCTURAL ENGINEER

Signed Moussa A. Issa
Dr. Moussa A. Issa, S.E. IL. LIC. No. 081-005738
Expires 11-30-2024
Date 06/21/2023 For Sheets S5-1 thru S5-10

GENERAL PLAN AND ELEVATION
MOMENT SLAB ALONG I-80
F.A.I. RTE. I-80
SEC. FAI 80 21 STRUCTURE 6
WILL COUNTY
STA. 492+27.00 TO STA. 497+37.00
(MOMENT SLAB 14)

HBM ENGINEERING GROUP, LLC

USER NAME = elton.nguyen	DESIGNED - SK	REVISED -	
	DRAWN - SK	REVISED -	
PLOT SCALE = 0.166666 ' / in.	CHECKED - MAI	REVISED -	
PLOT DATE = 6/22/2023	DATE - 6/26/23	REVISED -	

STATE OF ILLINOIS
DEPARTMENT OF TRANSPORTATION

MOMENT SLAB 14
GENERAL PLAN AND ELEVATION

SCALE: SHEET S5-1 OF S5-10 SHEETS STA. TO STA.

F.A.I. RTE.	SECTION	COUNTY	TOTAL SHEETS	SHEET NO.
I-80	FAI 80 21 STRUCTURE 6	WILL	898	651
		CONTRACT NO. 62R27		
		ILLINOIS FED. AID PROJECT		

MODEL: BL_PR_I80 - Plan 3 [Sheet]
FILE NAME: pw://transystems-pw.bentley.com:TRANSYSCORP-PW1-HOSTED/Documents/Projects_2018/C-14014011800022/02-TransSystems/CAD/62R27/Sheets/23-Structural/Moment Slabs/D162R27-SHT-MOMENTSLAB14-STRUCT-1

GENERAL NOTES

CAST-IN-PLACE CONCRETE

1. All exposed concrete edges shall have 1¾"x45° chamfer, except where shown otherwise. Chamfer on vertical edges shall be continued a minimum of one foot below finished ground level.

REINFORCEMENT BARS

1. Reinforcement bars designated "(E)" shall be epoxy coated.

2. Bars noted thus, 3x2-#5 indicates 3 lines of bars with 2 lengths of bars per line.

CONSTRUCTION

1. No construction joint except those on the plans shall be allowed unless approved by the engineer.

2. It shall be the Contractor's responsibility to verify the location of all utilities prior to starting construction. Contact J.U.L.I.E., 800-892-0123.

3. The contractor shall field verify location of the existing utilities prior to construction. The contractor shall take precautions not to damage existing utilities. Any damage shall be repaired by the Contractor at no additional cost.

INDEX OF SHEETS

S5-1 General Plan and Elevation
S5-2 General Notes, Index of Sheets, and Total Bill of Material
S5-3 Anchorage Slab Plan and Elevation 1
S5-4 Anchorage Slab Plan and Elevation 2
S5-5 Anchorage Slab Plan and Elevation 3
S5-6 Anchorage Slab Plan and Elevation 4
S5-7 Anchorage Slab Plan and Elevation 5
S5-8 Anchorage Slab Plan and Elevation 6
S5-9 Anchorage Slab Sections and Details
S5-10 Noise Abatement Wall Connection Details

LEGEND

- Exist. Underground Telephone
- Exist. Underground Electric
- Prop. Underground Electric
- Prop. Lighting Cable
- Exist. Underground Gas
- Exist. Aerial Line
- Exist. Underground Fiber Optic
- Prop. Underground Fiber Optic
- Exist. Underground Cable
- Exist. Pipe Underdrain
- Prop. Pipe Underdrain
- Exist. Storm Sewer
- Prop. Storm Sewer
- Prop. Guardrail
- Exist. Guardrail
- Exist. Fence
- Exist. Access Control & ROW
- Exist. Cable Barrier
- Exist. Lighting.
- Prop. Lighting
- Prop. Drainage
- Prop. Concrete Headwall
- Soil Boring

TOTAL BILL OF MATERIAL

ITEM	UNIT	TOTAL
Concrete Superstructure	Cu Yd	471.9
Protective Coat	Sq Yd	357
Reinforcement Bars, Epoxy Coated	Pound	111,040
Noise Abatement Wall Anchor Rod Assembly	Each	48

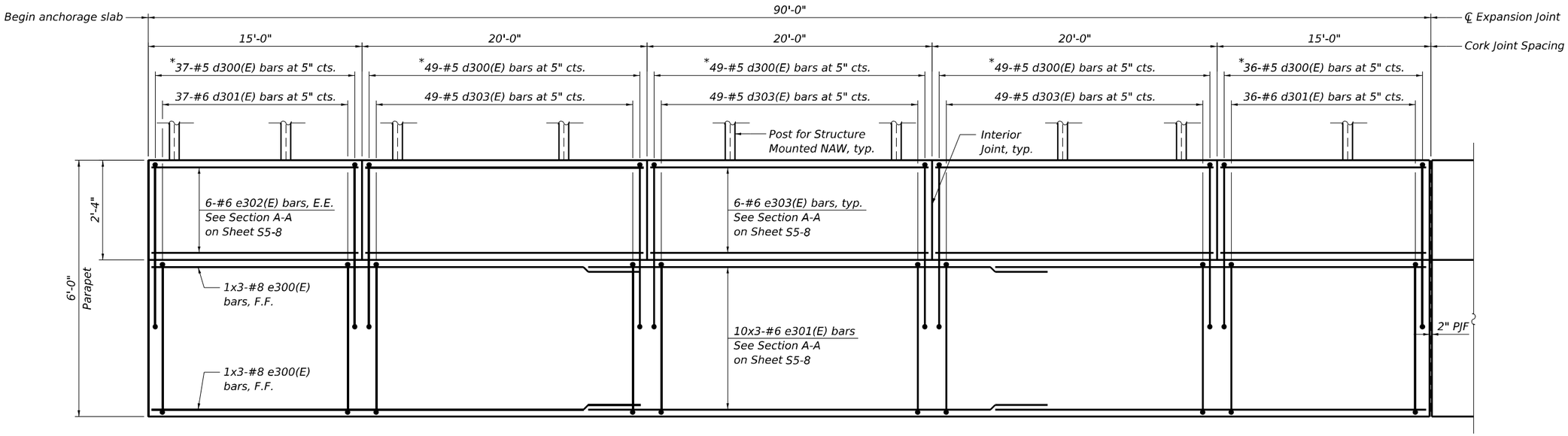

INSIDE ELEVATION OF PARAPET

(Segment 1)

* Tilt 7-d300(E) bars to fit at area of noise abatement anchor rod assembly locations.

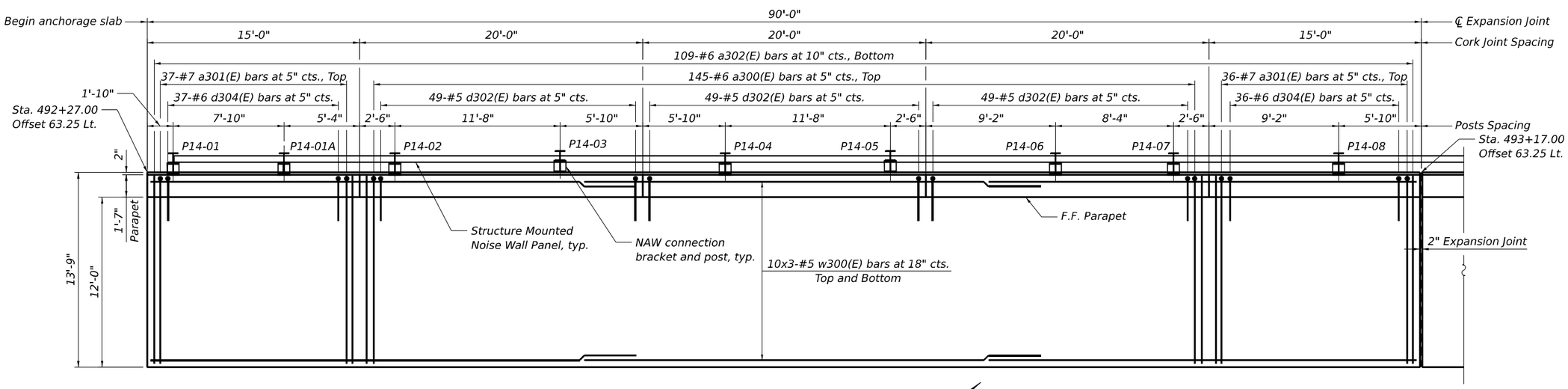

PLAN

(Segment 1)

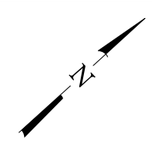

NOTES:

1. Stations and offsets are measured along ℄ I-80 to outside edge of anchorage slab.
2. For Bar diagrams, Expansion, Construction, and Cork Joint Details, and Bill of Material, see Sheet S5-9.
3. For Noise Abatement Wall connection details, see Sheet S5-10.
4. Cost of 2" PJF is not paid for separately and shall be included with Concrete Superstructure.

HBM ENGINEERING GROUP, LLC

USER NAME = eltonnguyen	DESIGNED - SK	REVISED -	
	DRAWN - SK	REVISED -	
PLOT SCALE =	CHECKED - MAI	REVISED -	
PLOT DATE = 8/10/2023	DATE - 6/26/23	REVISED -	

STATE OF ILLINOIS
DEPARTMENT OF TRANSPORTATION

ANCHORAGE SLAB 14
ANCHORAGE SLAB PLAN AND ELEVATION 1

SCALE: | SHEET S5-3 OF S5-10 SHEETS | STA. | TO STA.

F.A.I. RTE.	SECTION	COUNTY	TOTAL SHEETS	SHEET NO.
I-80	FAI 80 21 STRUCTURE 6	WILL	898	653
		CONTRACT NO. 62R27		
	ILLINOIS	FED. AID PROJECT		

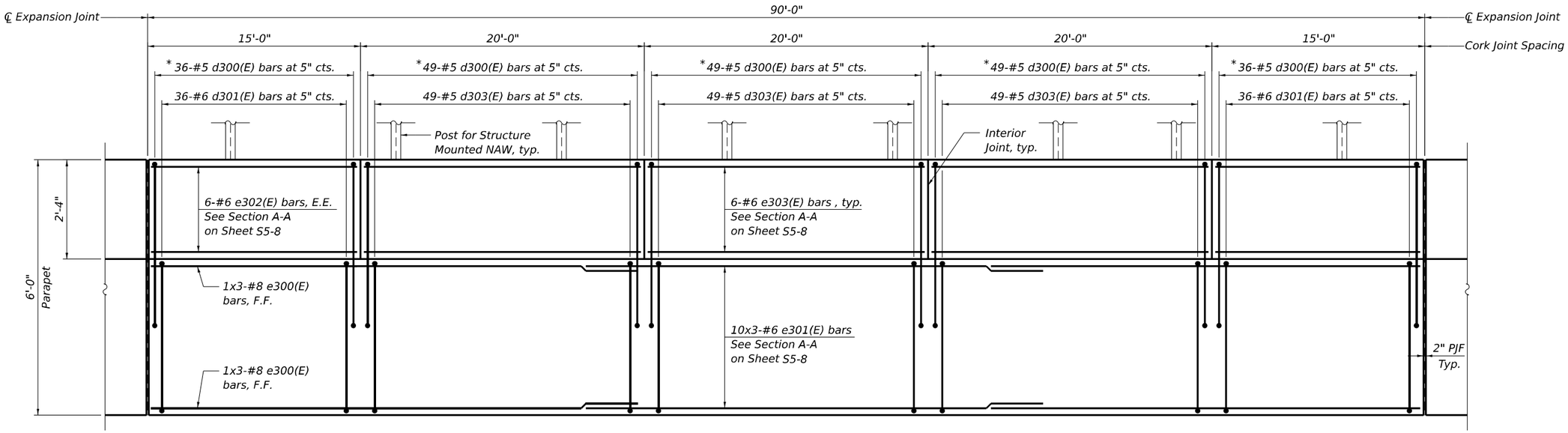

INSIDE ELEVATION OF PARAPET

(Segment 2)

* Tilt 7-d300(E) bars to fit at area of noise abatement anchor rod assembly locations.

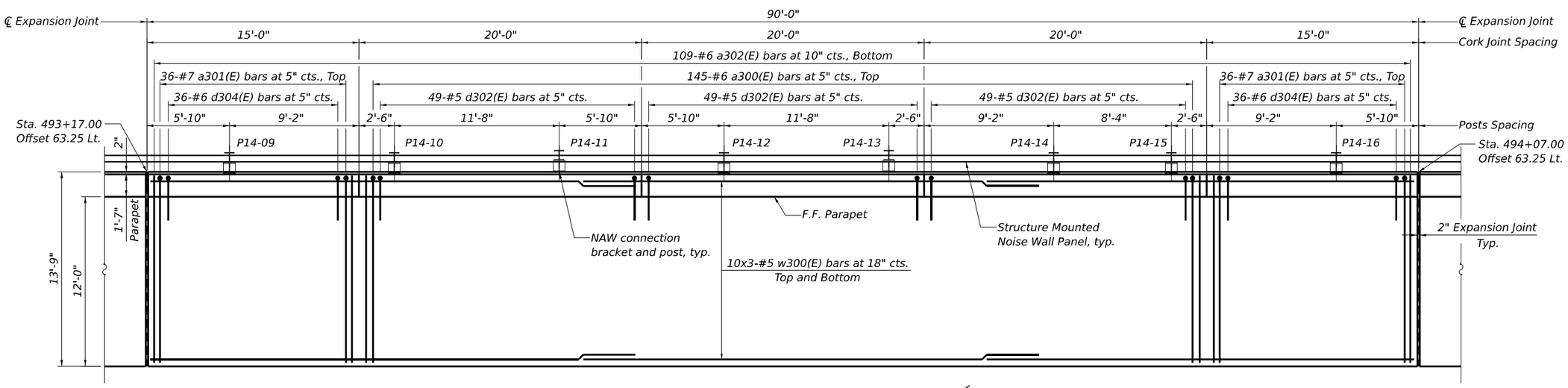

PLAN

(Segment 2)

N

NOTES:

1. Stations and offsets are measured along ℄ I-80 to outside edge of anchorage slab.
2. For Bar diagrams, Expansion, Construction, and Cork Joint Details, and Bill of Material, see Sheet S5-9.
3. For Noise Abatement Wall connection details, see Sheet S5-10.
4. Cost of 2" PJF is not paid for separately and shall be included with Concrete Superstructure.

MODEL: BL_PR_I80 • Plan 3 [Sheet]
FILE NAME: pw://transystems-pw.bentley.com:TRANSYSCORP-PW1-HOSTED/Documents/Projects_2018/CH401/401180022/02-TranSystems/CAD/62R27/Sheets/23-Structural/Moment Slabs/D16ZR27-SHT-MOMENTSLAB14-STRUCT-4

HBM ENGINEERING GROUP, LLC

USER NAME = eltonnguyen	DESIGNED - SK	REVISED -	
	DRAWN - SK	REVISED -	
PLOT SCALE =	CHECKED - MAI	REVISED -	
PLOT DATE = 8/10/2023	DATE - 6/26/23	REVISED -	

STATE OF ILLINOIS
DEPARTMENT OF TRANSPORTATION

ANCHORAGE SLAB 14
ANCHORAGE SLAB PLAN AND ELEVATION 2

SCALE: | SHEET S5-4 OF S5-10 SHEETS | STA. | TO STA.

F.A.I. RTE.	SECTION	COUNTY	TOTAL SHEETS	SHEET NO.
I-80	FAI 80 21 STRUCTURE 6	WILL	898	654
		CONTRACT NO. 62R27		
	ILLINOIS	FED. AID PROJECT		

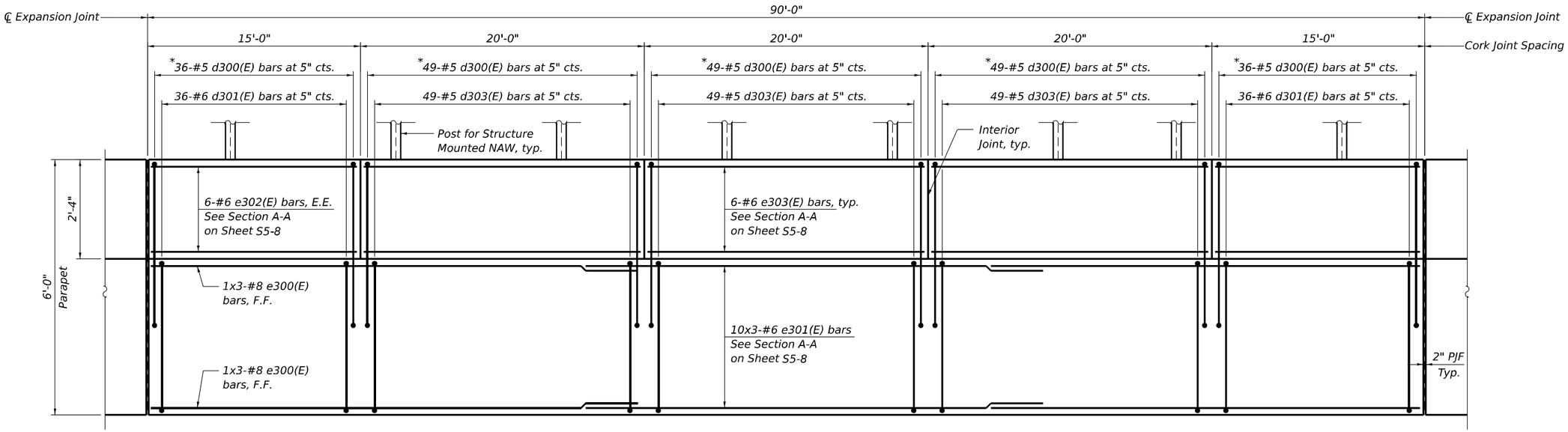

INSIDE ELEVATION OF PARAPET

(Segment 3)

*Tilt 7-d300(E) bars to fit at area of noise abatement anchor rod assembly locations.

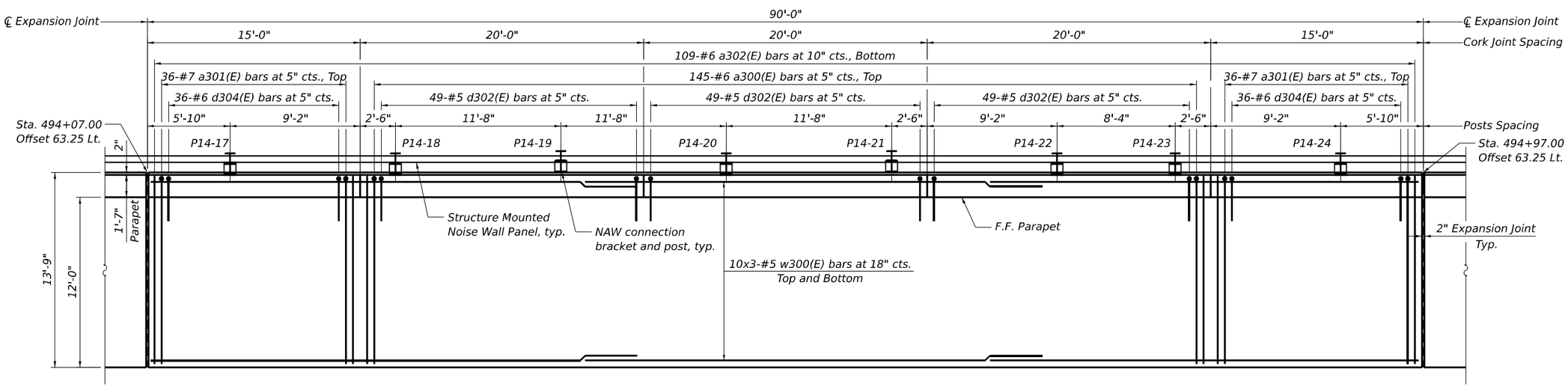

PLAN

(Segment 3)

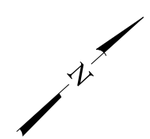

NOTES:

1. Stations and offsets are measured along ℄ I-80 to outside edge of anchorage slab.
2. For Bar diagrams, Expansion, Construction, and Cork Joint Details, and Bill of Material, see Sheet S5-9.
3. For Noise Abatement Wall connection details, see Sheet S5-10.
4. Cost of 2" PJF is not paid for separately and shall be included with Concrete Superstructure.

MODEL: BL_PR_I80 - Plan 3 [Sheet]
FILE NAME: pw://transystems-pw.bentley.com:TRANSYSCORP-PW1-HOSTED/Documents/Projects_2018/CH401/401180022/02-TranSystems/CAD/62R27/Sheets/23-Structural/Moment Slabs/D16R27-SHT-MOMENTSLAB14-STRUCT-5

HBM ENGINEERING GROUP, LLC

USER NAME = eltonnguyen	DESIGNED - SK	REVISED -	
	DRAWN - SK	REVISED -	
PLOT SCALE =	CHECKED - MAI	REVISED -	
PLOT DATE = 8/10/2023	DATE - 6/26/23	REVISED -	

STATE OF ILLINOIS
DEPARTMENT OF TRANSPORTATION

ANCHORAGE SLAB 14
ANCHORAGE SLAB PLAN AND ELEVATION 3

SCALE: | SHEET S5-5 OF S5-10 SHEETS | STA. | TO STA.

F.A.I. RTE.	SECTION	COUNTY	TOTAL SHEETS	SHEET NO.
I-80	FAI 80 21 STRUCTURE 6	WILL	898	655
		CONTRACT NO. 62R27		
	ILLINOIS	FED. AID PROJECT		

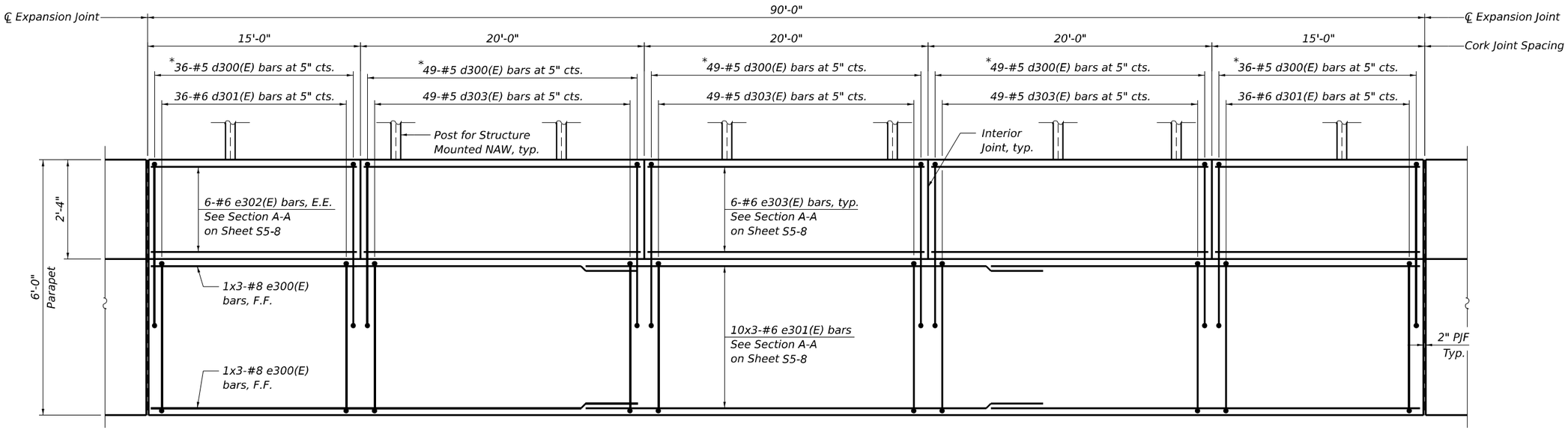

INSIDE ELEVATION OF PARAPET

(Segment 4)

*Tilt 7-d300(E) bars to fit at area of noise abatement anchor rod assembly locations.

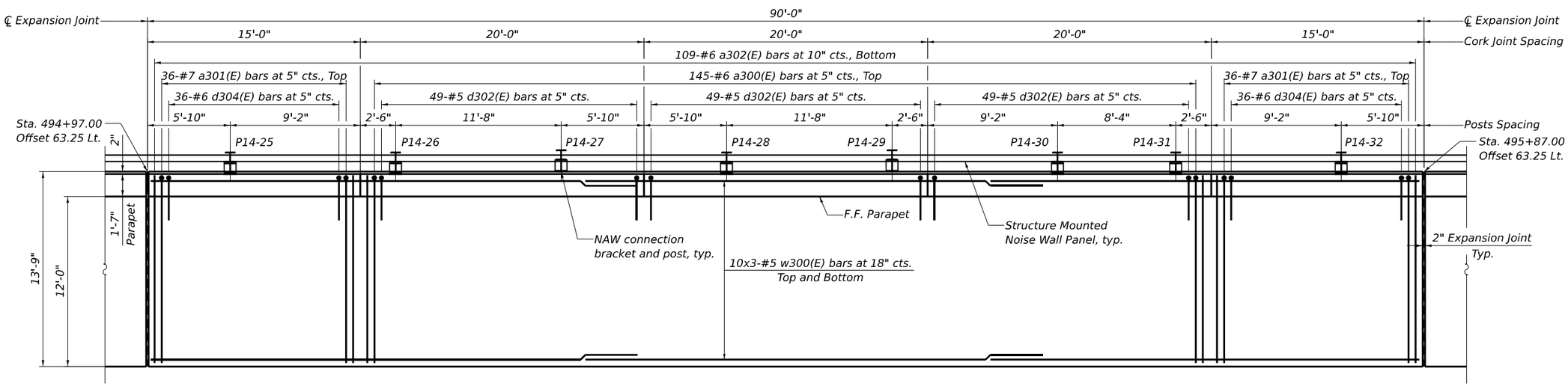

PLAN

(Segment 4)

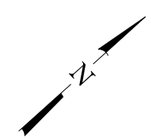

NOTES:

1. Stations and offsets are measured along ℄ I-80 to outside edge of anchorage slab.
2. For Bar diagrams, Expansion, Construction, and Cork Joint Details, and Bill of Material, see Sheet S5-9.
3. For Noise Abatement Wall connection details, see Sheet S5-10.
4. Cost of 2" PJF is not paid for separately and shall be included with Concrete Superstructure.

HBM ENGINEERING GROUP, LLC

USER NAME = eltonnguyen	DESIGNED - SK	REVISED -	
	DRAWN - SK	REVISED -	
PLOT SCALE =	CHECKED - MAI	REVISED -	
PLOT DATE = 8/10/2023	DATE - 6/26/23	REVISED -	

STATE OF ILLINOIS
DEPARTMENT OF TRANSPORTATION

ANCHORAGE SLAB 14
ANCHORAGE SLAB PLAN AND ELEVATION 4

SCALE: | SHEET S5-6 OF S5-10 SHEETS | STA. | TO STA.

F.A.I. RTE.	SECTION	COUNTY	TOTAL SHEETS	SHEET NO.
I-80	FAI 80 21 STRUCTURE 6	WILL	898	656

CONTRACT NO. 62R27

ILLINOIS | FED. AID PROJECT

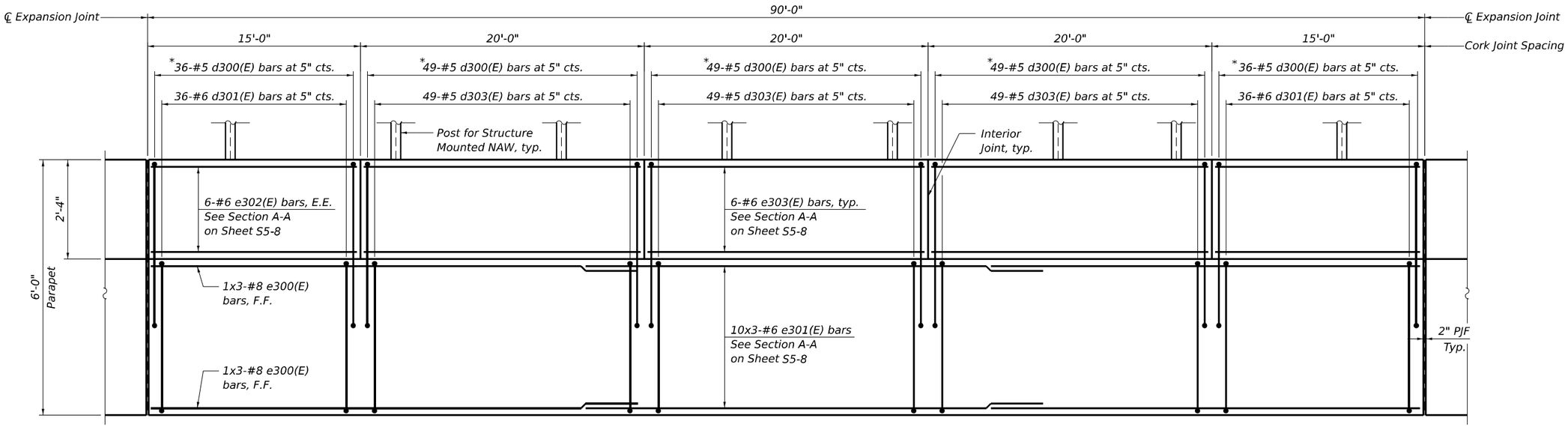

INSIDE ELEVATION OF PARAPET

(Segment 5)

*Tilt 7-d300(E) bars to fit at area of noise abatement anchor rod assembly locations.

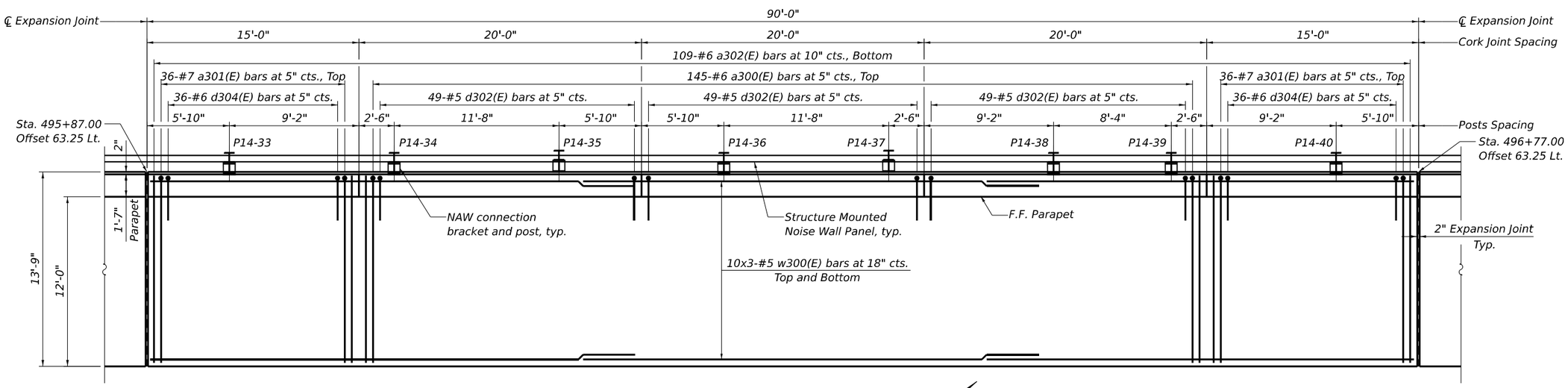

PLAN

(Segment 5)

N

NOTES:

1. Stations and offsets are measured along ℄ I-80 to outside edge of anchorage slab.
2. For Bar diagrams, Expansion, Construction, and Cork Joint Details, and Bill of Material, see Sheet S5-9.
3. For Noise Abatement Wall connection details, see Sheet S5-10.
4. Cost of 2" PJF is not paid for separately and shall be included with Concrete Superstructure.

MODEL: BL_PR_I80 - Plan 3 [Sheet]
FILE NAME: pw://transystems-pw.bentley.com:TRANSYSCORP-PW1-HOSTED/Documents/Projects_2018/CH401/401180022/02-TranSystems/CAD/62R27/Sheets/23-Structural/Moment Slabs/D16R27-SHT-MOMENTSLAB14-STRUCT-7

HBM ENGINEERING GROUP, LLC

USER NAME = eltonnguyen	DESIGNED - SK	REVISED -	
	DRAWN - SK	REVISED -	
PLOT SCALE =	CHECKED - MAI	REVISED -	
PLOT DATE = 8/10/2023	DATE - 6/26/23	REVISED -	

STATE OF ILLINOIS
DEPARTMENT OF TRANSPORTATION

ANCHORAGE SLAB 14
ANCHORAGE SLAB PLAN AND ELEVATION 5

SCALE: | SHEET S5-7 OF S5-10 SHEETS | STA. | TO STA.

F.A.I. RTE.	SECTION	COUNTY	TOTAL SHEETS	SHEET NO.
I-80	FAI 80 21 STRUCTURE 6	WILL	898	657
		CONTRACT NO. 62R27		
	ILLINOIS	FED. AID PROJECT		

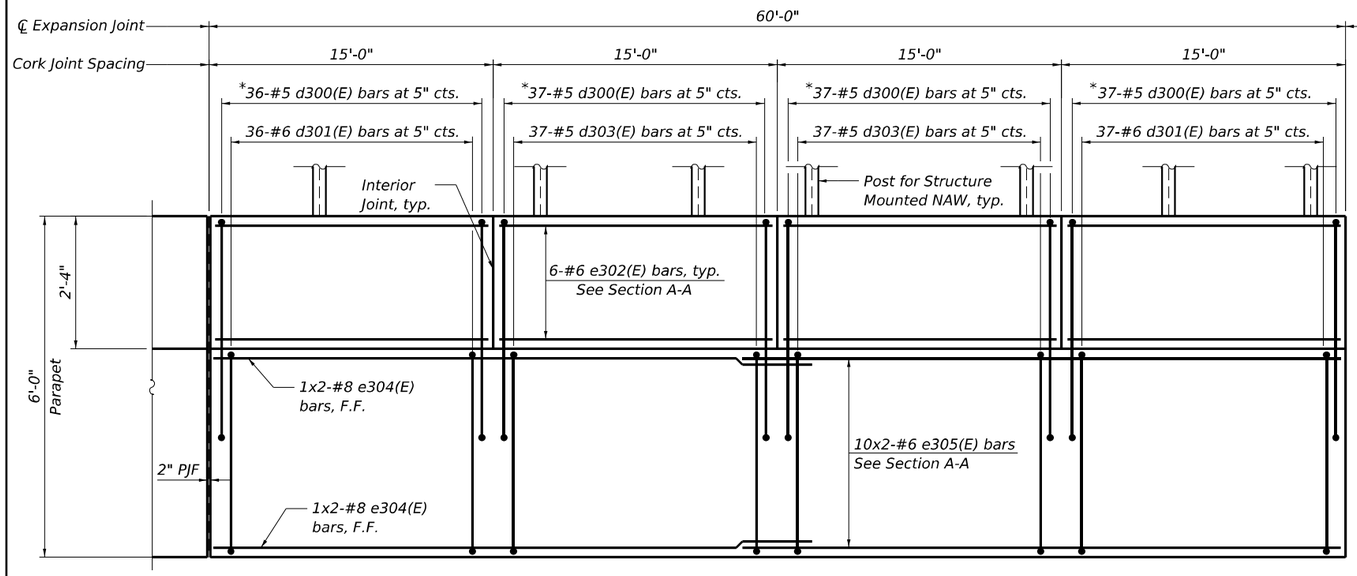

INSIDE ELEVATION OF PARAPET

(Segment 6)

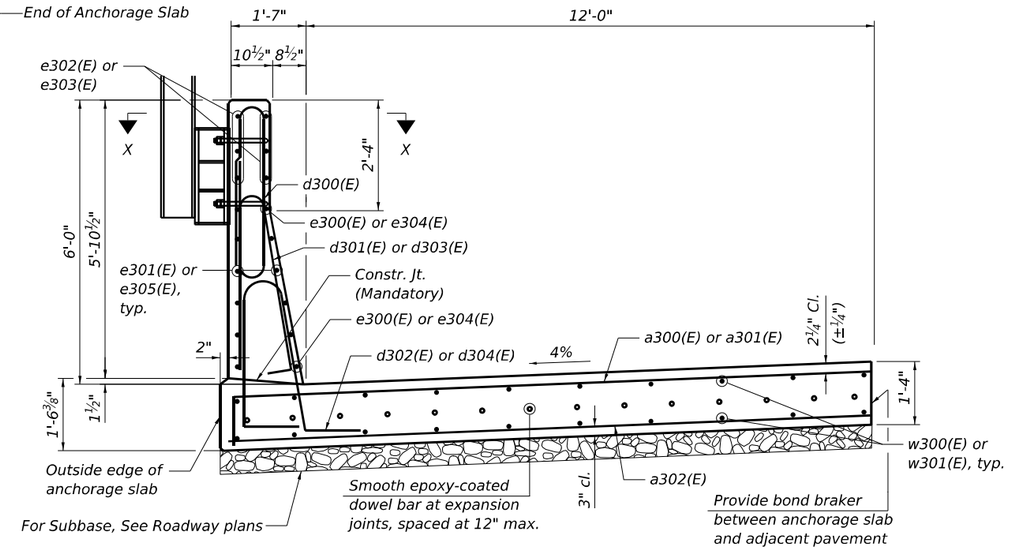

SECTION A-A

*Tilt 7-d300(E) bars to fit at area of noise abatement anchor rod assembly locations.

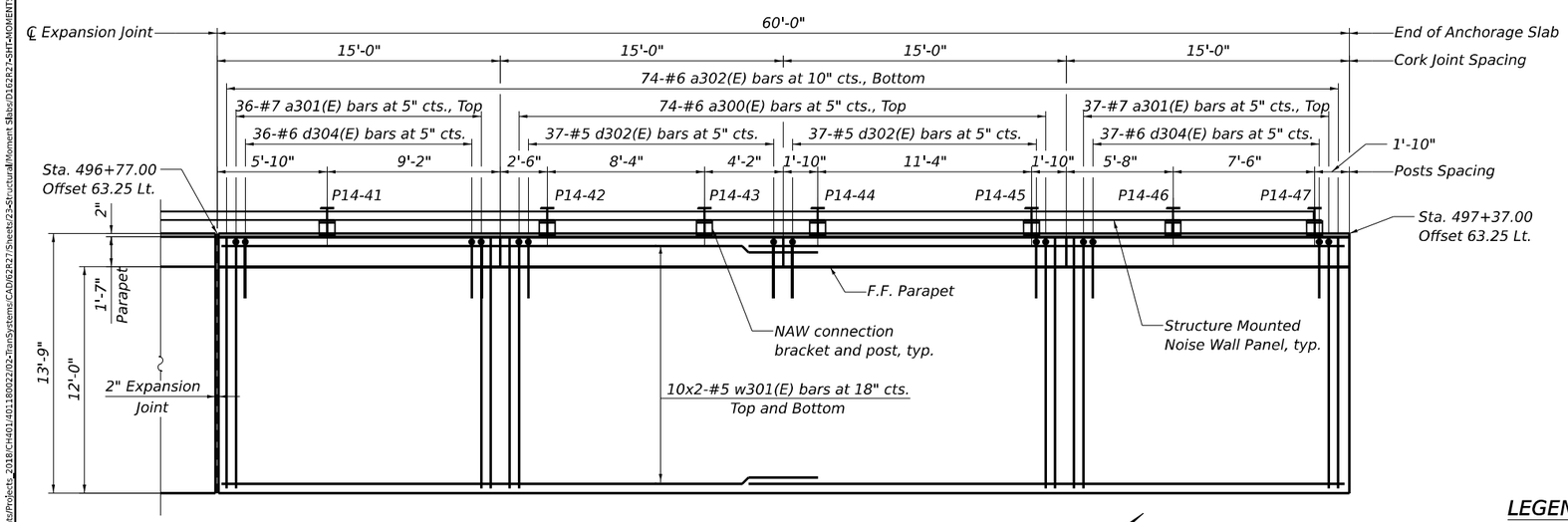

PLAN

(Segment 6)

N

LEGEND:

Subbase

NOTES:

1. Stations and offsets are measured along ℄ I-80 to outside edge of anchorage slab.
2. For Bar diagrams, Expansion, Construction, and Cork Joint Details, and Bill of Material, see Sheet S5-9.
3. For Section X-X and Noise Abatement Wall connection details, see Sheet S5-10.
4. Cost of 2" PJF is not paid for separately and shall be included with Concrete Superstructure.

HBM ENGINEERING GROUP, LLC

USER NAME = eltonnguyen	DESIGNED - SK	REVISED -	
	DRAWN - SK	REVISED -	
PLOT SCALE =	CHECKED - MAI	REVISED -	
PLOT DATE = 8/10/2023	DATE - 6/26/23	REVISED -	

STATE OF ILLINOIS
DEPARTMENT OF TRANSPORTATION

ANCHORAGE SLAB 14
ANCHORAGE SLAB PLAN AND ELEVATION 6

SCALE: | SHEET S5-8 OF S5-10 SHEETS | STA. | TO STA.

F.A.I. RTE.	SECTION	COUNTY	TOTAL SHEETS	SHEET NO.
I-80	FAI 80 21 STRUCTURE 6	WILL	898	658

CONTRACT NO. 62R27

ILLINOIS | FED. AID PROJECT

NOTES:

1. The ⅛" aluminum sheet shall be ASTM B 209 alloy 3303-H14 and coated to minimize reaction with wet concrete. Cost included with Concrete Superstructure.

2. The polyurethane sealent shall be according to Article 1050.04 of the Std. Spec. and the color should be gray.

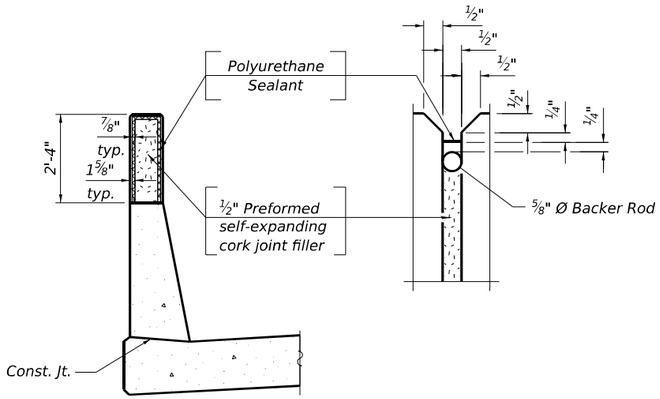

CORK PARAPET JOINT DETAILS

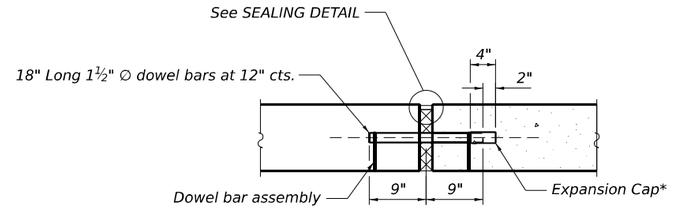

TRANSVERSE EXPANSION JOINT

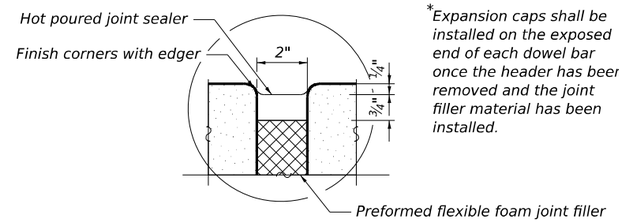

*Expansion caps shall be installed on the exposed end of each dowel bar once the header has been removed and the joint filler material has been installed.

SEALING DETAIL

BILL OF MATERIAL

Bar	No.	Size	Length	Shape
a300(E)	799	#6	14'-5"	
a301(E)	434	#7	14'-5"	
a302(E)	619	#6	13'-5"	
d300(E)	1243	#5	10'-0"	
d301(E)	434	#6	8'-7"	
d302(E)	809	#5	9'-0"	
d303(E)	809	#5	8'-1"	
d304(E)	434	#6	9'-0"	
e300(E)	30	#8	33'-0"	
e301(E)	150	#6	32'-3"	
e302(E)	84	#6	14'-8"	
e303(E)	90	#6	19'-9"	
e304(E)	4	#8	32'-2"	
e305(E)	20	#6	31'-7"	
w300(E)	300	#5	32'-1"	
w301(E)	40	#5	31'-6"	
Concrete Superstructure			Cu Yd	471.9
Protective Coat			Sq Yd	357
Reinforcement Bars, Epoxy Coated			Pound	111,040
Noise Abatement Wall Anchor Rod Assembly			Each	48

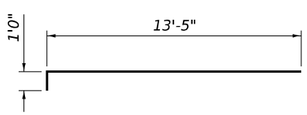

BARS a300(E) and a301(E)

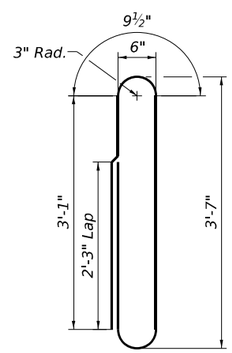

BAR d300(E)

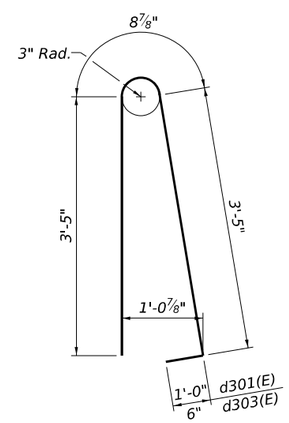

BARS d301(E) and d303(E)

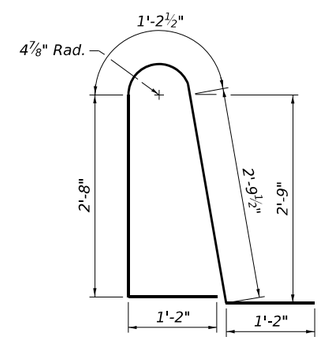

BARS d302(E) and d304(E)

(Back leg to extend 9½" into anchorage slab)

MINIMUM BAR LAPS

#5 bar = 3'-4"
#6 bar = 3'-7"
#8 bar = 4'-9"

MODEL: BL_PR_I80 - Plan 3 [Sheet]
FILE NAME: pw://transystems-pw.bentley.com:TRANSYSCORP-PW1-HOSTED/Documents/Projects_2018/CH401/401180022/02-TranSystems/CAD/62R27/Sheet/23-Structural/Moment Slabs/D162R27-SHT-MOMENTSLAB14-STRUCT-9

HBM ENGINEERING GROUP, LLC	USER NAME = eltonnguyen	DESIGNED - SK	REVISED -
		DRAWN - SK	REVISED -
	PLOT SCALE =	CHECKED - MAI	REVISED -
	PLOT DATE = 8/10/2023	DATE - 6/26/23	REVISED -

STATE OF ILLINOIS
DEPARTMENT OF TRANSPORTATION

ANCHORAGE SLAB 14
ANCHORAGE SLAB SECTIONS AND DETAILS

SCALE: | SHEET S5-9 OF S5-10 SHEETS | STA. | TO STA.

F.A.I. RTE.	SECTION	COUNTY	TOTAL SHEETS	SHEET NO.
I-80	FAI 80 21 STRUCTURE 6	WILL	898	659
		CONTRACT NO. 62R27		
		ILLINOIS FED. AID PROJECT		

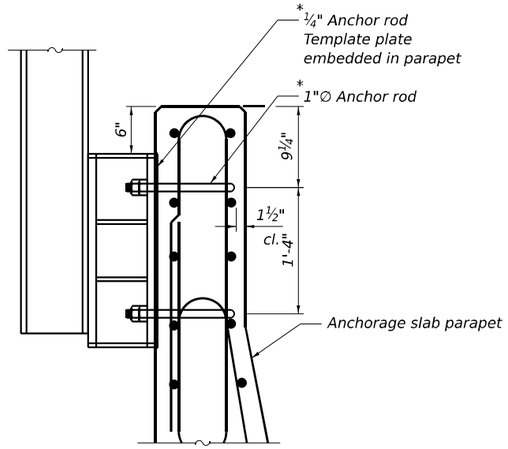

NOISE WALL CONNECTION DETAIL

*Cost of four anchor rods, template plate, and associated hardware included in the cost for one each of Noise Abatement Wall Anchor Rod Assembly.

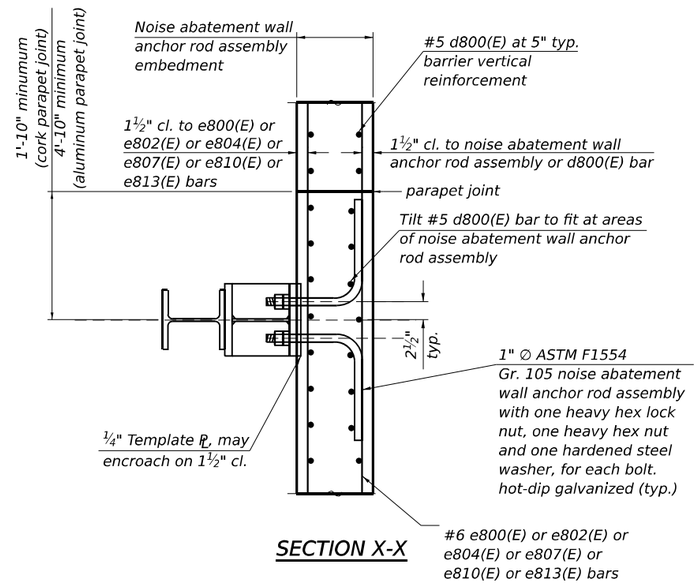

SECTION X-X

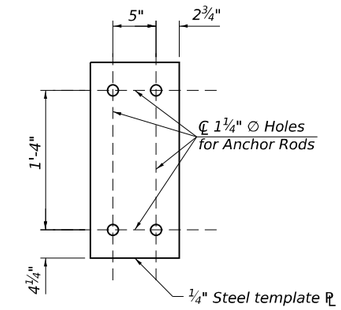

TEMPLATE PLATE FOR NOISE ABATEMENT WALL ANCHOR ROD ASSEMBLY

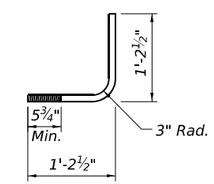

NOISE ABATEMENT WALL ANCHOR ROD ASSEMBLY

NOTE:

1. Post and post connection bracket details shown on anchorage slab plans for information only. See Noise Abatement Walls plans for full details.

MODEL: BL_PR_I80 - Plan 3 [Sheet]
FILE NAME: pw://transystems-pw.bentley.com:TRANSYSCORP-PW1-HOSTED/Documents/Projects_2018/CH401/401180022/02-TranSystems/CAD/62R27/Sheet/23-Structural/Moment Slabs/D162R27-SHT-MOMENTSLAB14-STRUCT-10

HBM ENGINEERING GROUP, LLC	USER NAME = eltonnguyen	DESIGNED - SK	REVISED -	STATE OF ILLINOIS DEPARTMENT OF TRANSPORTATION	MOMENT SLAB 14 NOISE ABATEMENT WALL CONNECTION DETAILS	F.A.I. RTE.	SECTION	COUNTY	TOTAL SHEETS / SHEET NO.
		DRAWN - SK	REVISED -			I-80	FAI 80 21 STRUCTURE 6	WILL	898 / 660
	PLOT SCALE =	CHECKED - MAI	REVISED -					CONTRACT NO. 62R27	
	PLOT DATE = 8/10/2023	DATE - 6/26/23	REVISED -		SCALE: SHEET S5-10 OF S5-10 SHEETS STA. TO STA.		ILLINOIS	FED. AID PROJECT	

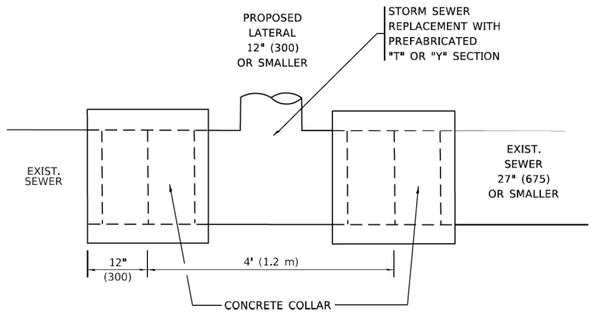

DETAIL "A"

LATERAL CONNECTION TO EXISTING SEWER
OF 27" (675) OR SMALLER

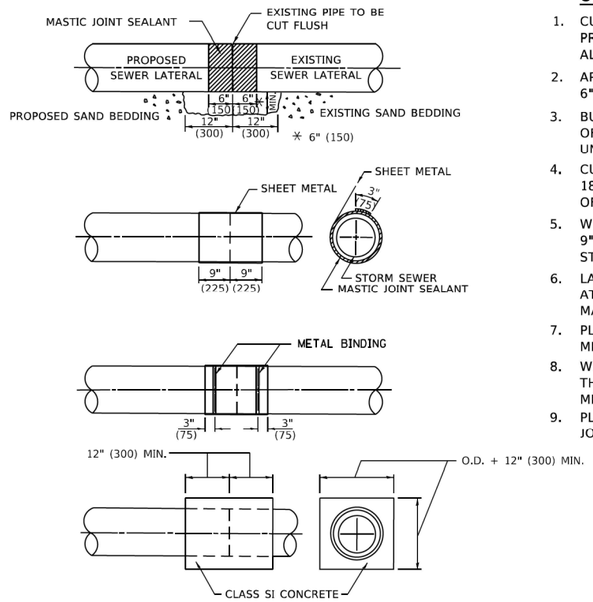

DETAIL "B"

CLASS SI CONCRETE COLLAR

CONSTRUCTION SEQUENCE

1. CUT THE EXISTING END OF THE PIPE SO AS TO PRESENT A FLUSH BUTT JOINT. BRUSH AND CLEAN ALL PIPES.
2. APPLY THE MASTIC JOINT SEALANT TO THE FIRST 6" (150) OF EACH PIPE.
3. BUTT THE PIPES TOGETHER LEAVING A MINIMUM OF 12' x 6' (300 x 150) DEEP EXCAVATION UNDER AND AROUND EACH PIPE END.
4. CUT A PIECE OF SHEET METAL GAGE NO. 19 1.1 (0.0418) 18" (450) WIDE BY THE OUTSIDE CIRCUMFERANCE OF THE PIPE PLUS 3" (75) LONG.
5. WRAP THE SHEET METAL AROUND THE PIPES, 9" (225) ON EACH SIDE OF THE JOINT, STARTING AT THE TOP OF THE PIPE.
6. LAP THE SHEET METAL AT LEAST 3" (75) AT THE TOP OF THE PIPE AND PLACE THE MASTIC JOINT SEALANT BETWEEN THE LAP.
7. PLACE TWO METAL BANDS AROUND THE SHEET METAL AND TIGHTEN.
8. WIPE OFF ANY EXCESS MASTIC JOINT SEALANT THAT OOZES OUT FROM BETWEEN THE SHEET METAL AND THE PIPES.
9. PLACE CLASS SI CONCRETE AROUND THE JOINT.

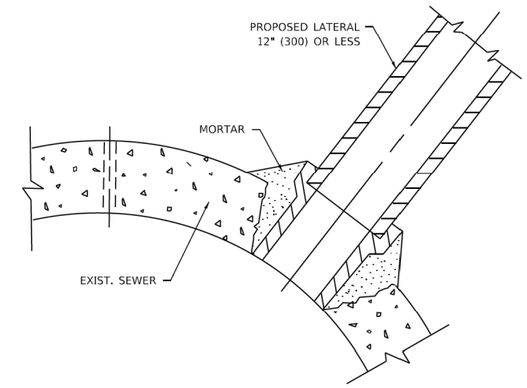

DETAIL "C"

PROPOSED LATERAL
CONNECTION TO EXISTING SEWER
OF 30" (750) OR LARGER

NOTES:

MATERIAL

MATERIAL USED FOR THE TEE OR WYE SECTION SHALL BE COMPATIBLE WITH THE EXISTING STORM SEWER OR THE PROPOSED STORM SEWER.

CONSTRUCTION METHODS

I. THIS WORK SHALL BE CONSTRUCTED IN CONFORMANCE WITH THE APPLICABLE PORTIONS OF SECTION 550 OF THE STANDARD SPECIFICATIONS.

II. CONNECTION TO AN EXISTING STORM SEWER SHALL BE BY EITHER OF THE FOLLOWING METHODS:
A) PROPOSED STORM SEWER CONNECTION TO EXISTING SEWER OF 27" (675) OR SMALLER SEE DETAIL "A" AND "B".
B) PROPOSED STORM SEWER CONNECTION TO EXISTING SEWER OF 30" (750) OR LARGER SEE DETAIL "C".

IF THE EXISTING SEWER PIPE IS CRACKED, BROKEN OR OTHERWISE DAMAGED BY THE CONTRACTOR IN MAKING THE CIRCULAR OPENING, THE CONTRACTOR SHALL REPLACE THAT SECTION OF PIPE WITH PIPE EQUAL AND SIMILAR IN ALL RESPECTS TO THE PIPE IN THE EXISTING SEWER, IN A CAREFUL WORKMANLIKE MANNER, WITHOUT EXTRA COMPENSATION.

GENERAL

1. CARE MUST BE TAKEN TO PREVENT DEBRIS FROM ENTERING THE SEWER. ALL DEBRIS WHICH ENTERS THE SEWER MUST BE REMOVED. THE SEWER MUST BE LEFT CLEAN AND UNOBSTRUCTED UPON COMPLETION OF THE CONTRACT.
2. CARE MUST BE TAKEN TO PREVENT ANY PART OF THE NEW PIPE CONNECTION FROM PROJECTING INTO THE EXISTING SEWER.

BASIS OF PAYMENT

1. TEE OR WYE CONNECTIONS SHALL BE PAID FOR AT THE CONTRACT UNIT PRICE EACH FOR STORM SEWER TEE OR WYE OF THE TYPE AND SIZE SPECIFIED IN THE PLANS, THIS PRICE SHALL INCLUDE ALL EXCAVATION OF THE TRENCH, REMOVAL OF THE EXISTING STORM SEWER, FURNISHING AND INSTALLING THE SPECIFIED TEE OR WYE SECTION, FURNISHING AND INSTALLING THE REQUIRED CONCRETE COLLAR, AND ALL OTHER MATERIAL NECESSARY TO COMPLETE THIS WORK AS SHOWN AND SPECIFIED.
2. REMOVAL AND REINSTALLATION OF EXISTING STORM SEWER ADJACENT TO THE PROPOSED TEE OR WYE SECTION, FOR THE PURPOSE OF FACILITATING THE INSTALLATION OF THE TEE OR WYE SECTION, WILL NOT BE PAID FOR SEPARATELY BUT SHALL BE INCLUDED IN THE UNIT PRICE BID FOR THE WORK.
3. TRENCH BACKFILL, EXCAVATION IN ROCK AND REMOVAL AND REPLACEMENT OF UNSUITABLE MATERIAL BELOW PLAN BEDDING GRADE WILL BE PAID FOR SEPARATELY.
4. CONCRETE COLLAR FOR CONNECTING A PROPOSED STORM SEWER TO AN EXISTING STORM SEWER WILL NOT BE PAID PAID FOR SEPARATELY BUT SHALL BE INCLUDED IN THE COST OF THE PROPOSED STORM SEWER.

* ALL DIMENSIONS ARE IN INCHES (MILLIMETERS) UNLESS OTHERWISE SHOWN.

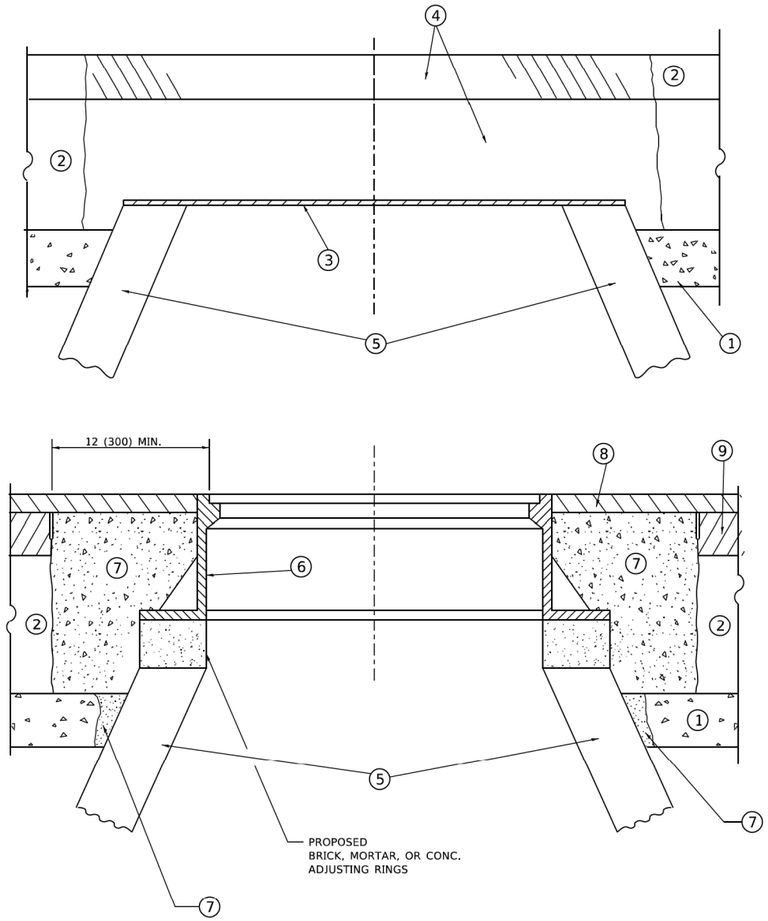

DETAILS FOR FRAMES AND LIDS ADJUSTMENT WITH MILLING

NOTES

1. EXISTING BROKEN FRAMES AND LIDS SHALL BE REMOVED AND DISPOSED OF BY THE CONTRACTOR AND SHALL BE REPLACED AS DIRECTED BY THE ENGINEER. REPLACEMENT FRAMES AND LIDS WILL BE PAID FOR IN ACCORDANCE WITH ARTICLE 109.04 OF THE STANDARD SPECIFICATIONS UNLESS A SEPARATE PAY ITEM HAS BEEN PROVIDED.

2. IF THE EXISTING LIDS ARE OPEN, THE FRAME WILL BE ADJUSTED TO THE ELEVATION OF THE MILLED PAVEMENT SURFACE PRIOR TO THE MILLING OPERATION. THE FRAME WILL NOT BE REMOVED AND COVERED BY THE METAL PLATE.

3. CITY OF CHICAGO CASTINGS ARE THE PROPERTY OF THE CITY AND THE CONTRACTOR SHALL NOTIFY THE CITY FOR REMOVAL AND DISPOSITION OF THE CASTINGS.

4. THE METAL PLATE USED TO COVER THE STRUCTURE SHALL REMAIN THE PROPERTY OF THE CONTRACTOR.

CONSTRUCTION PROCEDURES

STAGE 1 (BEFORE PAVEMENT MILLING)

A) REMOVE A MINIMUM OF 12 (300) OF THE PAVEMENT FROM AROUND THE STRUCTURE.

B) REMOVE THE EXISTING FRAME AND LID FROM THE STRUCTURE.

C) COVER THE STRUCTURE OPENING WITH A 36 (900) DIAMETER METAL PLATE.

D) BACKFILL WITH CRUSHED STONE AND HMA SURFACE MIX APPROVED BY THE ENGINEER. (MIN. 1 1/2 (40) HMA TO REMAIN AFTER MILLING).

STAGE 2 (AFTER PAVEMENT MILLING)

A) REMOVE THE HMA SURFACE MIX AND CRUSHED STONE.

B) INSTALL THE FRAME AND LID; ADJUST THE FRAME TO ITS FINAL SURFACE ELEVATION.

C) THE SURROUNDING SPACE SHALL BE FILLED WITH CLASS*PP-1 CONCRETE TO THE ELEVATION OF THE SURFACE OF THE EXISTING BASE COURSE OR THE BINDER COURSE.

*UNLESS OTHERWISE SPECIFIED IN THE PLANS.

THE PROCEDURE EXPLAINED ABOVE SHALL CONFORM TO THE APPLICABLE PORTIONS OF SECTIONS 353, 406, 602, AND 603 OF THE STANDARD SPECIFICATIONS EXCEPT THAT "THE CONTRACTOR SHALL ADJUST THE STRUCTURES TO THE FINISHED PAVEMENT ELEVATION NO MORE THAN 5 CALENDAR DAYS PRIOR TO PLACEMENT OF THE FINAL LIFT OF SURFACE UNLESS APPROVED BY THE ENGINEER."

LEGEND

1. SUB-BASE GRANULAR MATERIAL
2. EXISTING PAVEMENT
3. 36 (900) DIAMETER METAL PLATE
4. PROPOSED CRUSHED STONE AND HMA SURFACE MIX
5. EXISTING STRUCTURE
6. FRAME AND LID (SEE NOTES)
7. CLASS*PP-1 CONCRETE
8. PROPOSED HMA SURFACE COURSE
9. PROPOSED HMA BINDER COURSE

LOCATION OF STRUCTURES

THE CONTRACTOR WILL BE REQUIRED TO KEEP A RECORD OF THE LOCATIONS OF THE BURIED STRUCTURES ACCORDING TO THE STATION AND DISTANCE LEFT OR RIGHT OF THE CENTERLINE OF PAVEMENT. UPON COMPLETION OF THE WORK, THE CONTRACTOR WILL DELIVER THE RECORD TO THE ENGINEER.

BASIS OF PAYMENT

1. REMOVING FRAMES AND LIDS ON DRAINAGE AND UTILITY STRUCTURES IN THE PAVEMENT PRIOR TO MILLING, AND ADJUSTING TO FINAL GRADE PRIOR TO PLACING THE SURFACE COURSE, WILL BE PAID FOR AT THE CONTRACT UNIT PRICE EACH FOR "FRAMES AND LIDS TO BE ADJUSTED (SPECIAL)."

2. THIS WORK WILL NOT BE PAID FOR WHEN DRAINAGE AND UTILITY STRUCTURES ARE SPECIFIED FOR PAYMENT AS STRUCTURE RECONSTRUCTION.

3. NEW FRAMES AND LIDS, WHEN SPECIFIED, WILL BE PAID FOR SEPARATELY.

4. WHEN STRUCTURES ARE TO BE ADJUSTED OR RECONSTRUCTED, THE LOWERING AND RAISING OF THE FRAMES AND LIDS WILL NOT BE PAID FOR SEPARATELY BUT WILL BE INCLUDED IN THE COST OF THE CORRESPONDING PAY ITEM.

ALL DIMENSIONS ARE IN INCHES (MILLIMETERS) UNLESS OTHERWISE SHOWN

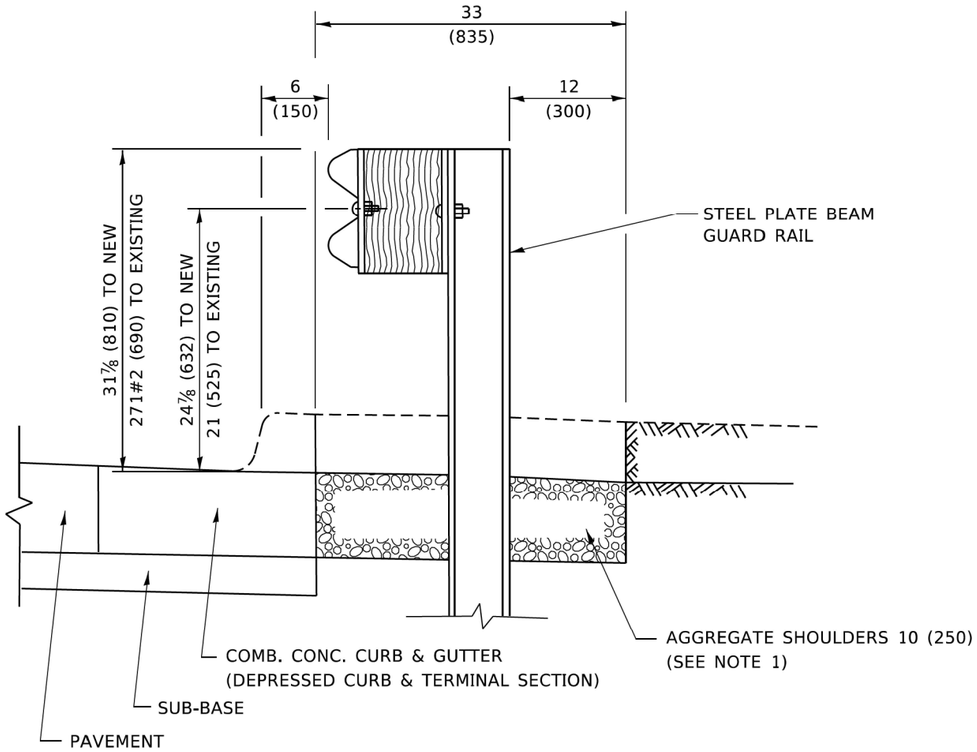

SECTION A–A

NOTES:

1. THE AGGREGATE SHOULDER, 10 (250) OR HMA SHOULDER, 6 (150) (IF REQUIRED) SHALL EXTEND UNDER THE TRAFFIC BARRIER TERMINAL.
2. "EXISTING" GUARDRAIL REFERS TO CONNECTING TERMINAL SECTION TO GUARD RAILING PRIOR TO THE MIDWEST GUARDRAIL SYSTEM.
3. THE CONTRACTOR SHALL VERIFY THE TYPE/HEIGHT OF GUARDRAIL IN-PLACE BEFORE ORDERING THE NEW TERMINAL SECTION. COST INCLUDED WITH THE COST OF THE TERMINAL. THE EXISTING GUARDRAIL HEIGHT SHALL TRANSISTION TO MATCH THE NEW TERMINAL END SECTION AND SHALL BE PAID FOR AS VERTICAL ADJUSTMENT OF EXISTING GUADRAIL.

DETAILS FOR STEEL PLATE BEAM GUARD RAIL ADJACENT TO CURB AND GUTTER [FOR ROADWAY SPEED 35 MPH (60 kmh) TO 45 MPH (70 kmh)]

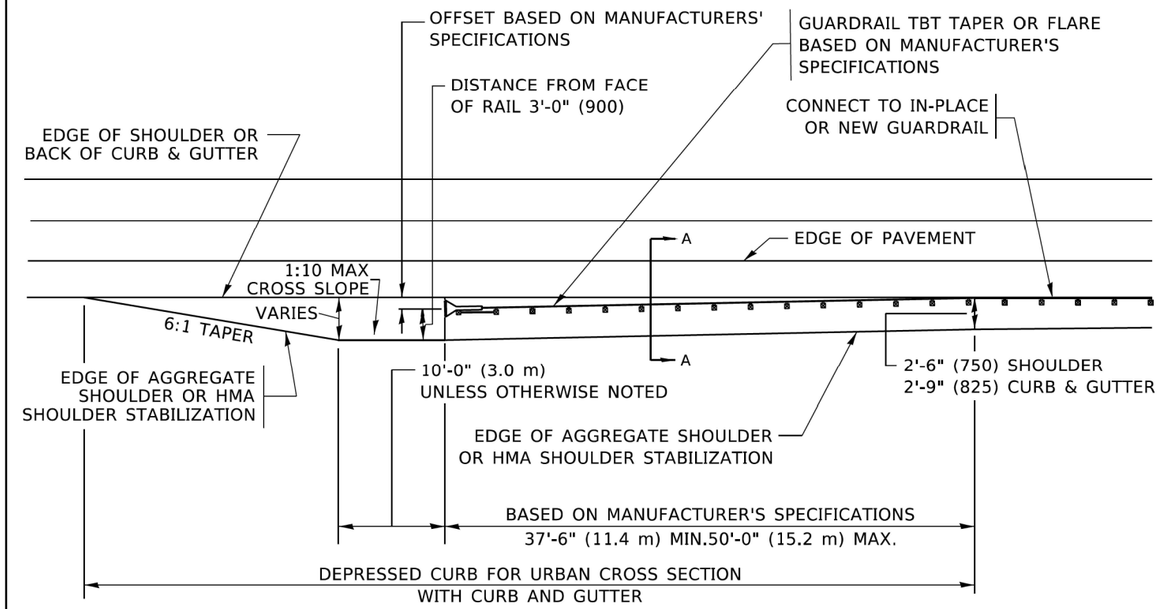

DEPRESSED CURB AND GUTTER AND SHOULDER TREATMENT AT TBT TY. 1 SPL.

AGGREGATE SHOULDER, 10 (250) WILL BE PAID ACCORDING TO SECTION 481.

HMA SHOULDERS 6 (150) (IF REQUIRED) WILL BE PAID ACCORDING TO SECTION 482.

COMB. CONC. C&G, STEEL PLATE BEAM GUARD RAIL AND TRAFFIC BARRIER TERMINAL, OF THE TYPE SPECIFIED WILL BE PAID FOR SEPARATELY.

TBT = TRAFFIC BARRIER TERMINAL

ALL DIMENSIONS ARE IN INCHES (MILLIMETERS) UNLESS OTHERWISE SHOWN.

MODEL: Default
FILE NAME: pw:\\ildot-pw.bentley.com:PWIDOT\Documents\IDOT Offices\District 1\Projects\DistStd22x34\CADData\CADsheets\bd34.dgn

TRANSYSTEMS

USER NAME = Lawrence.DeManche	DESIGNED - M. DE YONG	REVISED - R. BORO 09-14-2009	STATE OF ILLINOIS DEPARTMENT OF TRANSPORTATION	DETAILS FOR DEPRESSED CURB & GUTTER AND SHOULDER TREATMENT AT TBT TY. 1 SPL.	F.A. RTE. / SECTION / COUNTY / TOTAL SHEETS 898 / SHEET NO. 663
	DRAWN -	REVISED - R. BORO 08-06-2012			
PLOT SCALE = 100.0000 ' / in.	CHECKED -	REVISED - R. BORO 05-08-2015			BD600–10 (BD–34) / CONTRACT NO.62R27
PLOT DATE = 11/18/2022	DATE - 09-22-90	REVISED - K. SMITH 11-18-22		SCALE: NONE / SHEET 3 OF 20 SHEETS / STA. TO STA.	ILLINOIS FED. AID PROJECT

FRAME EXTENSION INTO PAVEMENT	INNER HOOP REINFORCEMENT DIAMETER	SEMI CIRCULAR FORM DIAMETER	OUTER HOOP REINFORCEMENT DIAMETER
UP TO 8" (200)	3'-6" (1.1 m)	4'-0" (1.2 m)	5'-0" (1.5 m)
> 8" (200) TO 14" (360)	4'-0" (1.2 m)	4'-6" (1.4 m)	5'-0" (1.5 m)

GENERAL NOTES

1. TRANSVERSE JOINTS MAY BE MOVED TO ACCOMMODATE ROUNDOUT, EDGE OF CIRCULAR JOINT SHALL BE MINIMUM 12" (300) FROM TRANSVERSE JOINT. RELOCATED TRANSVERSE JOINT SHALL BE CONTINUOUS FROM EDGE OF PAVEMENT TO EDGE OF PAVEMENT.
2. SEMI-CIRCULAR FORM SHALL BE REMOVED PRIOR TO DRILL AND GROUT OF TIE BARS.
3. ALL REINFORCED BARS SHALL BE EPOXY COATED.
4. DRILL AND GROUT IS PREFERRED, HOWEVER TIE BARS CAN BE POURED IN PLACE IF CLEARANCE IS PROVIDED TO OUTER EDGE OF FRAME. MINIMUM 2" (50) CLEARANCE.
5. WOOD SHIMS SHALL BE USED TO ADJUST ALL FRAMES. AFTER ADJUSTING MORTAR HAS CURED, THE WOOD SHIMS SHALL BE REMOVED AND THE VOIDS UNDER THE FRAMES FILLED WITH NON SHRINK GROUT.
6. HOOP REINFORCEMENT SHALL BE ONE PIECE CONSTRUCTION.
7. CIRCULAR FRAMES AND GRATES MAY BE SUBSTITUTED.
8. CURB DOWELS MUST BE PLACED LEVEL & TRUE TO ALLOW CONTRACTION MOVEMENT.

BASIS OF PAYMENT

1. THE ROUNDOUT AND ADDED REINFORCEMENT WILL NOT BE PAID SEPARATELY, BUT SHALL BE INCLUDED IN THE CONTRACT UNIT PRICE FOR THE PAVEMENT.

DESIGNER NOTE
THIS DETAIL IS TO BE USED WHEN THE GUTTER FLAG IS LESS THAN 24"

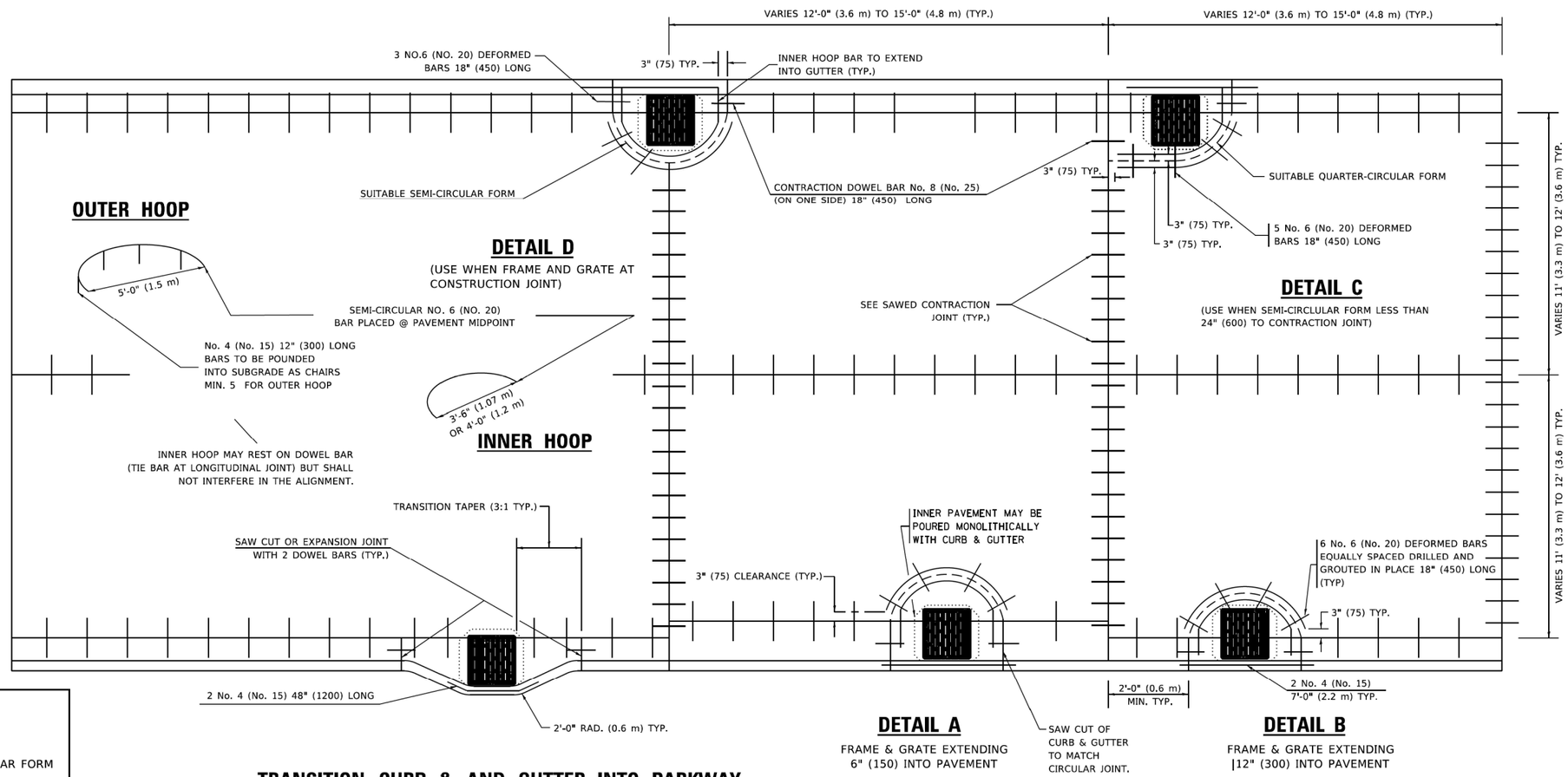

LEGEND

..... CASTING

– – – – – – SUITABLE SEMI-CIRCULAR FORM

TRANSITION CURB & AND GUTTER INTO PARKWAY
(PREFERRED BECAUSE PAVING OF MAINLINE NOT AFFECTED.)

ALL DIMENSIONS ARE IN INCHES (MILLIMETERS) UNLESS OTHERWISE NOTED

MODEL: Default
FILE NAME: pw:\\ildot-pw.bentley.com:PWIDOT\Documents\IDOT Offices\District 1\Projects\DistStd22x34\CADData\CADsheets\bd48.dgn

TRANSYSTEMS

USER NAME = Lawrence.DeManche	DESIGNED - A. ABBAS	REVISED - T. MATOUSEK 10-02-00	STATE OF ILLINOIS DEPARTMENT OF TRANSPORTATION
	DRAWN - TOM MATOUSEK	REVISED - T. MATOUSEK 04-25-02	
PLOT SCALE = 100.0000 ' / in.	CHECKED - A. ABBAS	REVISED - P. LAFLEUR 08-27-02	
PLOT DATE = 11/18/2022	DATE - 01-04-99	REVISED - K. SMITH 11-18-22	

PCC PAVEMENT ROUNDOUTS AT CURB AND GUTTER

SCALE: NONE | SHEET 4 OF 20 SHEETS | STA. TO STA.

F.A. RTE.	SECTION	COUNTY	TOTAL SHEETS	SHEET NO.
			898	664
BD-48		CONTRACT NO.62R27		
		ILLINOIS	FED. AID PROJECT	

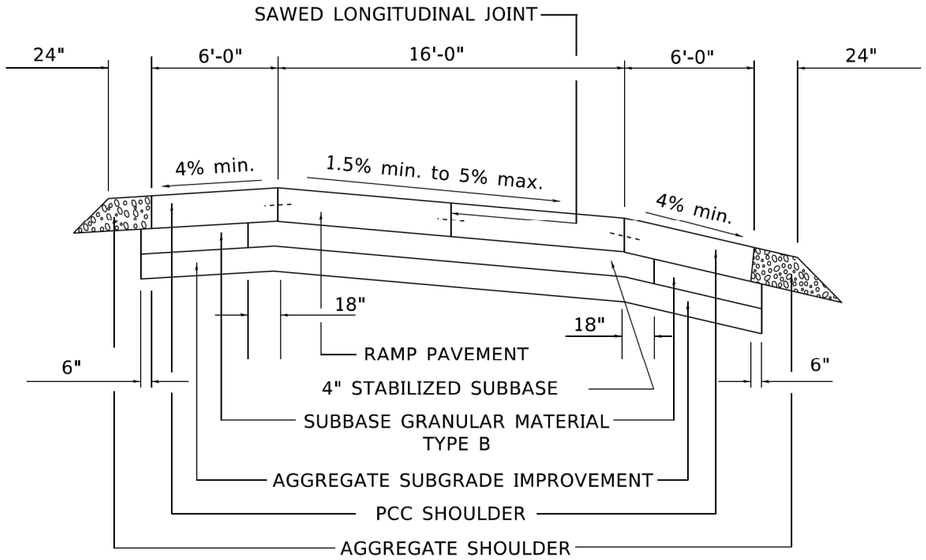

SECTION

NOTES:

1. CENTERLINE JOINT REMAINS IN THE CENTER WHEN RAMP TRANSITIONS TO TWO (2) RAMPS AT 12'.
2. ALL BARS TO BE EPOXY COATED.

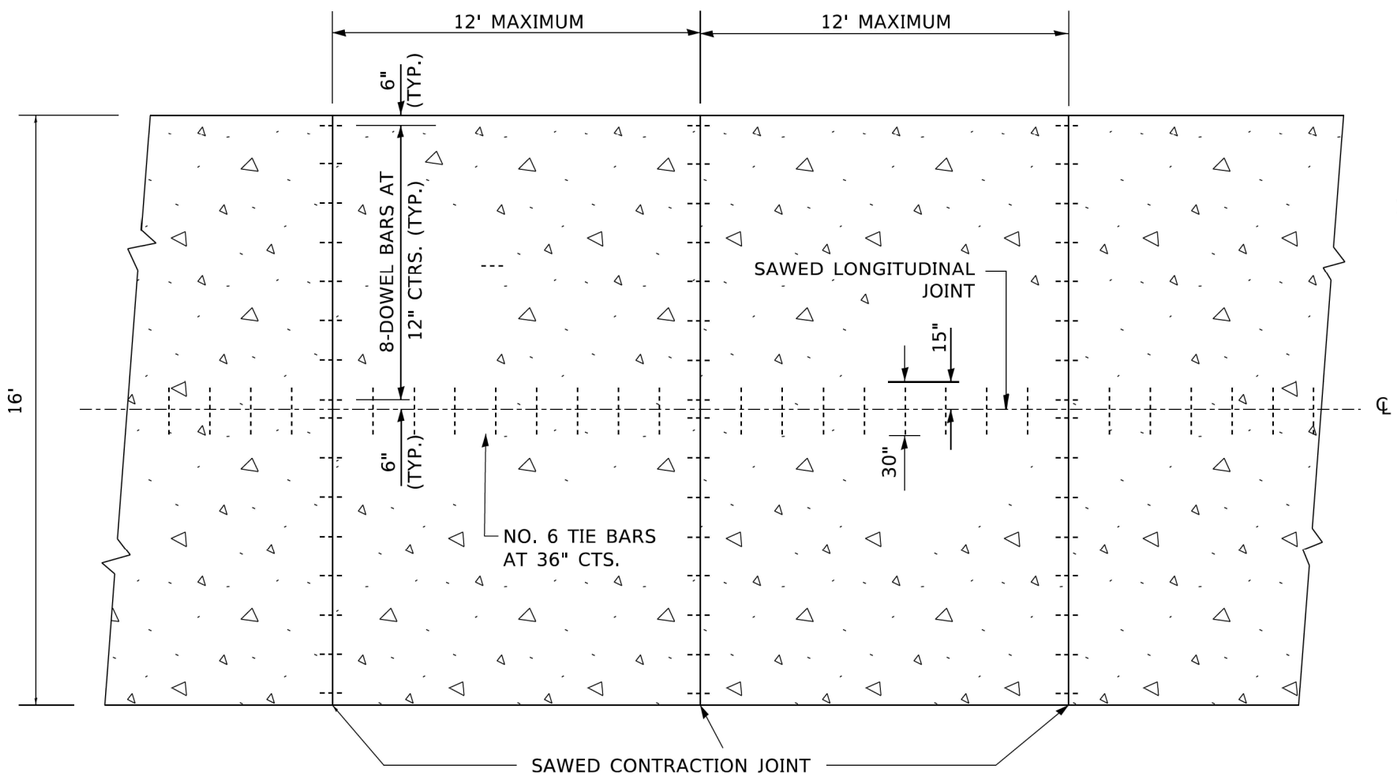

PLAN

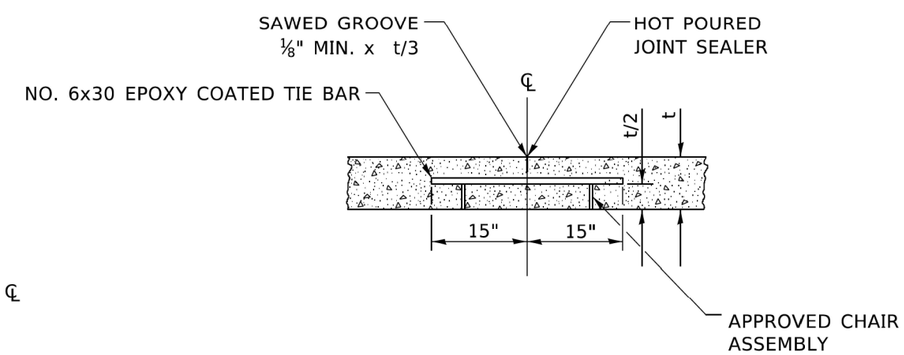

SAWED LONGITUDINAL JOINT

ALL DIMENSIONS ARE IN INCHES UNLESS OTHERWISE NOTED

MODEL: Default
FILE NAME: pw:\\ildot-pw.bentley.com:PWIDOT\Documents\IDOT Offices\District 1\Projects\DistStd22x34\CADdata\CADsheets\bd49.dgn

TRANSYSTEMS

USER NAME = Lawrence.DeManche	DESIGNED -	REVISED -TOM MATOUSEK 08/19/10	
	DRAWN - TOM MATOUSEK	REVISED - K. SMITH 11-18-22	
PLOT SCALE = 100.0000 ' / in.	CHECKED - A. ABBAS	REVISED -	
PLOT DATE = 11/18/2022	DATE - 10-18-02	REVISED -	

STATE OF ILLINOIS
DEPARTMENT OF TRANSPORTATION

DETAIL FOR CENTERLINE SAW CUT 16' AND VARIABLE JOINTED PCC PAVEMENT FOR RAMPS

SCALE: NONE | SHEET 5 OF 20 SHEETS | STA. TO STA.

F.A. RTE.	SECTION	COUNTY	TOTAL SHEETS	SHEET NO.
			898	665
	BD-49	CONTRACT NO.62R27		
		ILLINOIS	FED. AID PROJECT	

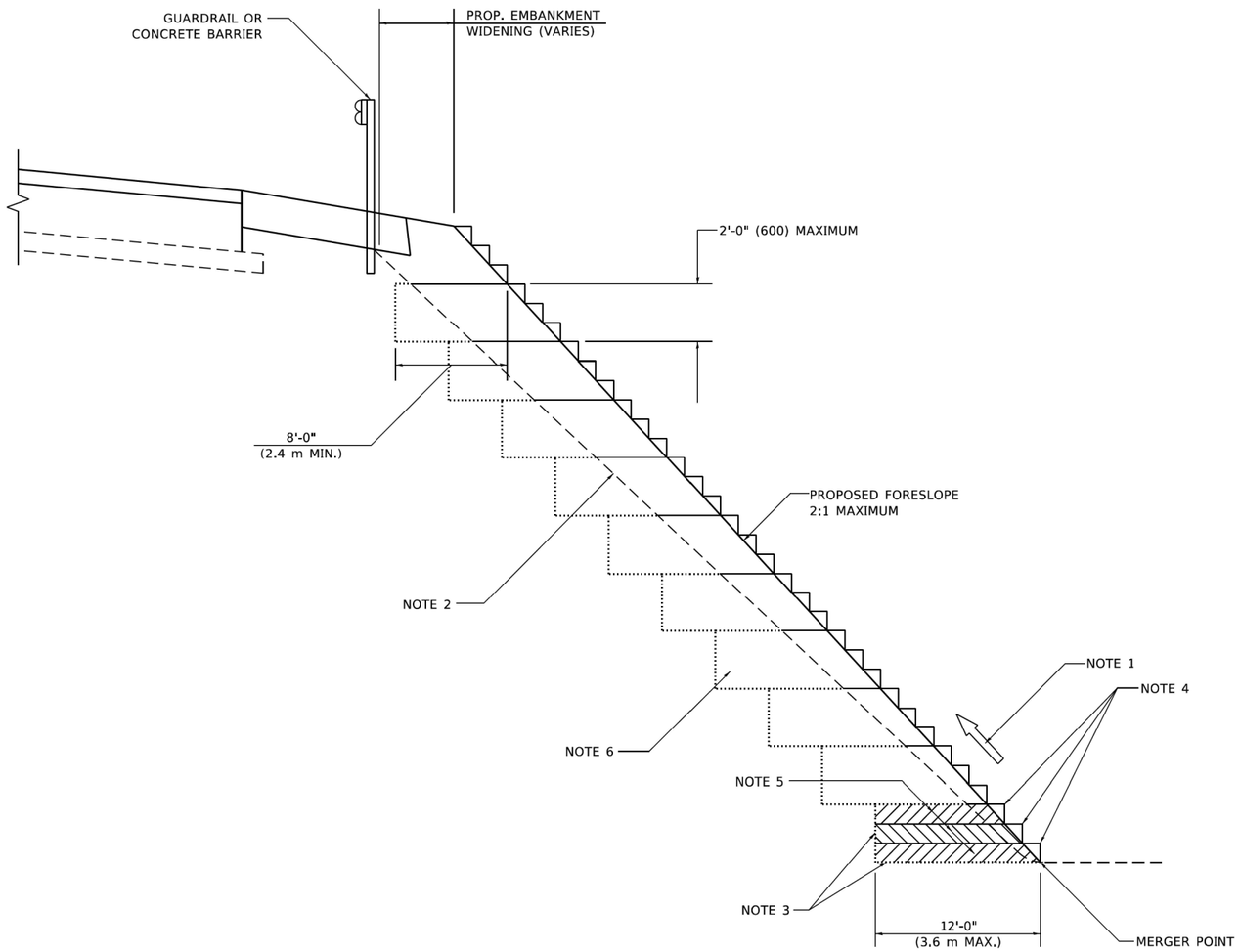

TYPICAL BENCHING DETAIL FOR EMBANKMENT

GENERAL NOTES

1. CONSTRUCT SUCCEEDING BENCH CUTS AND EMBANKMENT PLACEMENT AND COMPACTION FROM BOTTOM TO TOP IN STAIRSTEP FASHION.
2. EXISTING FORESLOPE PREPARED IN ACCORDANCE WITH ARTICLE 205.03 OF THE STANDARD SPECIFICATIONS.
3. BENCH CUT EXISTING SLOPE TYPICAL FOR EACH STEP.
4. TRIM TO FINAL SLOPE.
5. EQUAL 8-INCH (200) LIFTS OF EMBANKMENT COMPACTED IN ACCORDANCE WITH ARTICLE 205.05 OF THE STANDARD SPECIFICATIONS.

BASIS OF PAYMENT

1. EXCAVATION OF BENCH CUTS WITHIN EXISTING EMBANKMENT WILL BE PAID FOR AT THE CONTRACT UNIT PRICE PER CUBIC METER OR CUBIC YARD FOR "EARTH EXCAVATION". THIS PRICE WILL INCLUDE ALL LABOR AND MATERIAL, NO ADDITIONAL COMPENSATION WILL BE ALLOWED.

ALL DIMENSIONS ARE IN INCHES (MILLIMETERS)
UNLESS OTHERWISE SHOWN.

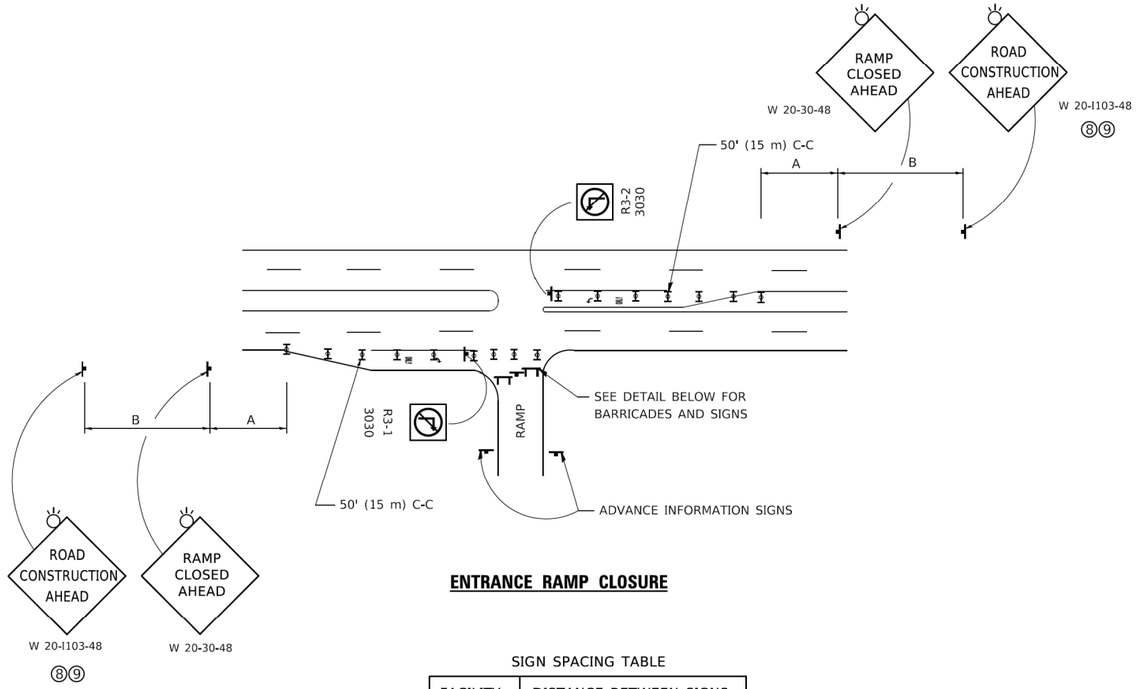

ENTRANCE RAMP CLOSURE

SIGN SPACING TABLE

FACILITY	DISTANCE BETWEEN SIGNS	
	A	B
EXPRESSWAY >24 HOURS	1000' (300 m)	1500' (450 m)
EXPRESSWAY ≤24 HOURS	500' (150 m)	500' (150 m)
ARTERIAL 55 MPH	500' (150 m)	500' (150 m)
ARTERIAL 50-45 MPH	350' (100 m)	350' (100 m)
ARTERIAL <45 MPH	200' (60 m)	200' (60 m)

DISTANCES MAY BE SHORTENED DEPENDING UPON THE PROXIMITY OF ADJACENT RAMPS OR INTERSECTIONS.

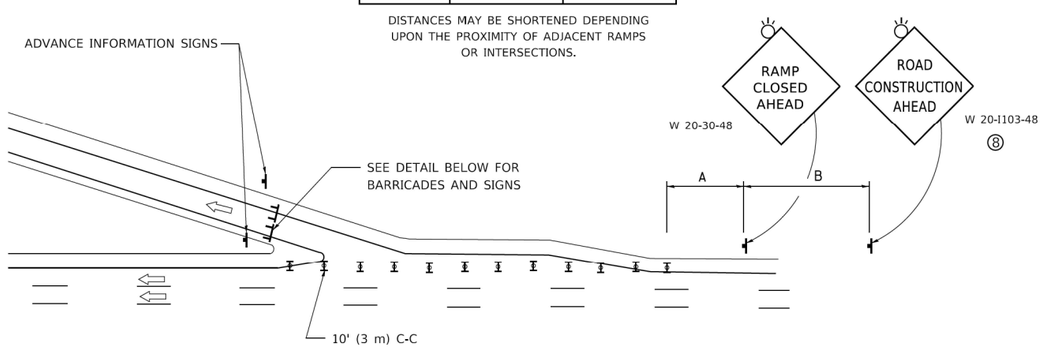

EXIT RAMP CLOSURE

SYMBOLS

TYPE II BARRICADE OR DRUM

TYPE III BARRICADE WITH 2 FLASHING LIGHTS

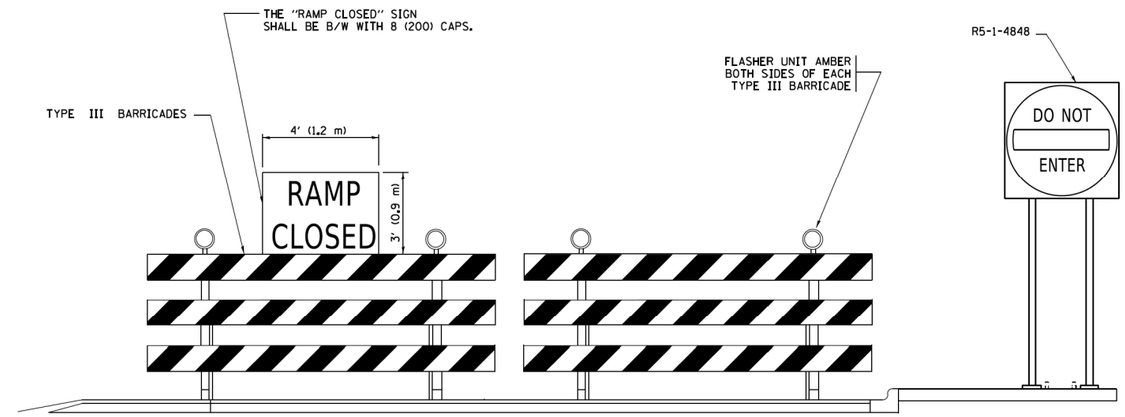

DETAIL FOR REQUIRED BARRICADES & SIGNS

RAMP CLOSURE ADVANCE WARNING SIGN

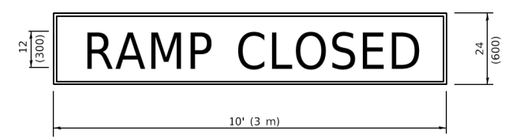

BLACK LEGEND ON ORANGE
BACKGROUND MOUNTED
DIAGONALLY
E MOD FONT
1 (25) BORDER

THESE SIGNS ARE REQUIRED ON ALL THE EXIT GUIDE SIGNS FOR EXIT RAMPS THAT WILL BE CLOSED FOR MORE THAN FOUR (4) CONSECUTIVE DAYS.

RAMP CLOSURE ADVANCE INFORMATION SIGN

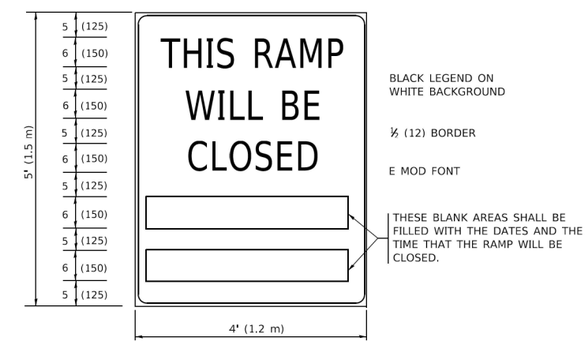

THESE SIGNS ARE REQUIRED ON BOTH SIDES OF THE RAMP, MINIMUM OF 1 WEEK IN ADVANCE OF THE CLOSURE.

THESE SIGNS SHALL BE FABRICATED AND PAID FOR ACCORDING TO THE TEMPORARY INFORMATION SIGNING SPECIAL PROVISION

GENERAL NOTES:

1. CONES MAY BE SUBSTITUTED FOR DRUMS OR TYPE II BARRICADES DURING DAY OPERATIONS. CONES SHALL BE A MINIMUM OF 28 (700) HIGH.
2. VERTICAL BARRICADES SHALL NOT BE USED FOR RAMP CLOSURES.
3. A FLAGGER SHALL BE POSITIONED AT EACH CLOSED RAMP THAT IS OPEN TO CONSTRUCTION VEHICLES, PRECEEDED BY A W20-7 FLAGGER WARNING SIGN.
4. ALL ROUTE MARKERS AND TRAILBLAZER ASSEMBLIES WHICH DIRECT MOTORISTS TO A CLOSED ENTRANCE RAMP SHALL BE COVERED WHEN THE RAMP IS CLOSED FOR MORE THAN FOUR (4) DAYS.
5. THE SIGNING AND BARRICADING WHICH IS REQUIRED BY THIS DETAIL SHALL BE INCLUDED IN THE COST OF TRAFFIC CONTROL AND PROTECTION (EXPRESSWAYS).
6. AUTHORIZATION FROM THE DISTRICT'S BUREAU OF TRAFFIC IS REQUIRED FOR ALL RAMP CLOSURES.
7. THE RAMP CLOSURE ADVANCE INFORMATION SIGNS SHALL BE ERECTED IF THE CLOSURE TIME EXCEEDS TWENTY-FOUR (24) HOURS. ADDITIONAL ADVANCE WARNING SIGNS ON EXIT GUIDE SIGNING WILL BE REQUIRED FOR EXIT RAMP CLOSURES THAT EXCEED FOUR (4) DAYS IN LENGTH
8. ROAD CONSTRUCTION AHEAD SIGNS MAY BE OMITTED WHEN THIS DETAIL IS USED IN CONJUNCTION WITH OTHER TRAFFIC CONTROL THAT ALREADY INCLUDES A ROAD CONSTRUCTION AHEAD SIGN.
9. ARTERIAL ROAD CONSTRUCTION AHEAD SIGNS SHALL BE INSTALLED ON THE LEFT SIDE OF TRAFFIC IF THE MEDIAN IS MORE THAN 10 FT WIDE.

ALL DIMENSIONS ARE IN INCHES (MILLIMETERS) UNLESS OTHERWISE SHOWN.

MODEL: Default
FILE NAME: pw:\\IL084EBIDINTEG.illinois.gov:PWIDOT\Documents\IDOT Offices\District 1\Projects\District22x34\CADData\CADSheets\tc08.dgn

TRANSYSTEMS

USER NAME = footemj	DESIGNED - D.W.S.	REVISED - S.P.B._01-07	
	DRAWN -	REVISED - S.P.B._12-09	
PLOT SCALE = 50.0000 ' / in.	CHECKED -	REVISED - M.D._06-13	
PLOT DATE = 3/4/2019	DATE - 02-83	REVISED - M.D._01-18	

STATE OF ILLINOIS
DEPARTMENT OF TRANSPORTATION

ENTRANCE_AND_EXIT_RAMP CLOSURE_DETAILS

SCALE: NONE | SHEET 7 OF 20 SHEETS | STA. TO STA.

F.A. RTE.	SECTION	COUNTY	TOTAL SHEETS	SHEET NO.
			898	667
TC-08		CONTRACT NO.62R27		
		ILLINOIS	FED. AID PROJECT	

tc08.dgn 3/4/2019 10:22:32 AM User=footemj

SINGLE LANE WEAVE

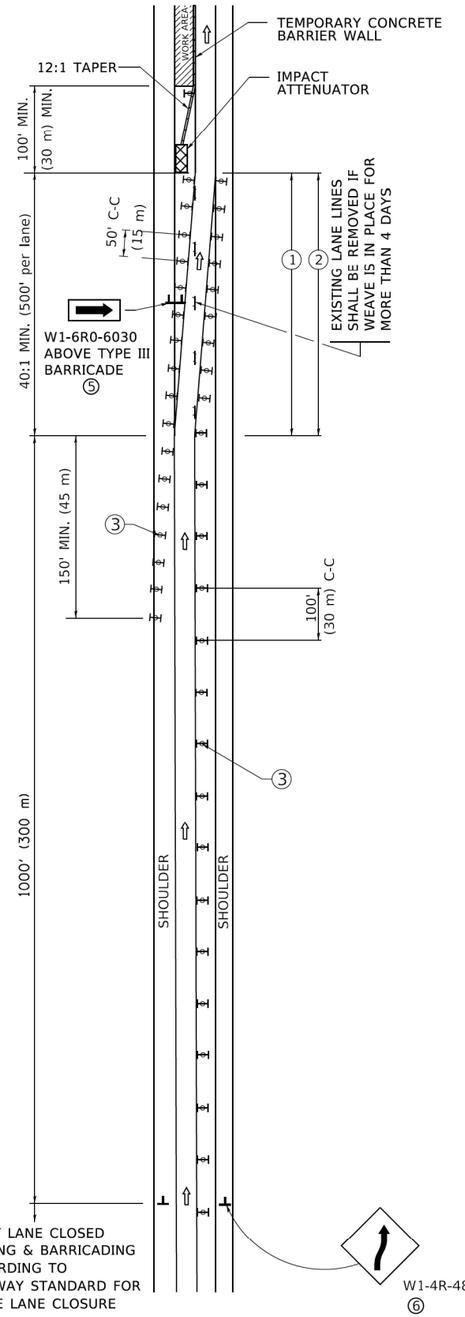

MULTI–LANE WEAVE

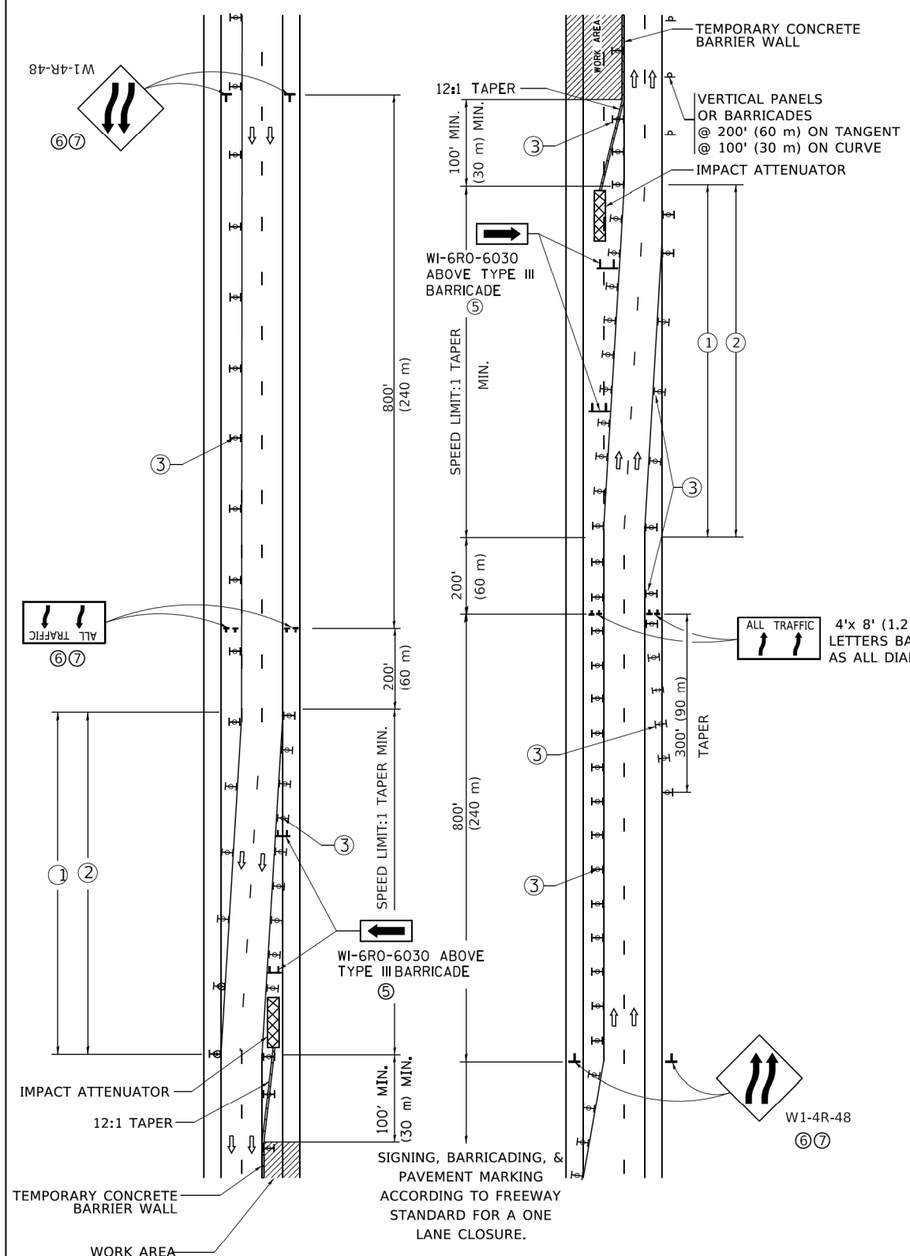

GENERAL NOTES:

1. EXISTING CONFLICTING PAVEMENT MARKING LINES SHALL BE REMOVED. PAVEMENT MARKING REMOVAL SHALL NOT BE REQUIRED FOR SINGLE LANE WEAVES UNDER 4 DAYS IN DURATION.
2. CONTINOUS REFLECTIVE TEMPORARY PAVEMENT MARKING TAPE SHALL BE PLACED THROUGHOUT THE TAPER AND FOR 300' (90 m) ALONG SIDE THE WORK AREA WHERE THE CLOSURE TIME IS GREATER THAN FOURTEEN DAYS. THE LEFT EDGE LINE SHALL BE YELLOW AND THE RIGHT EDGE LINE SHALL BE WHITE. FOR MULTI-LANE WEAVES LANE LINES SHALL BE 5 INCH, 10'-30' (3 m-9 m) SKIP DASH, WHITE.
3. PLASTIC DRUMS WITH STEADY BURN LIGHTS AT 50' (15 m) C-C SPACING IN TAPERS AND 100' (30 m) C-C SPACING IN TANGENTS.
4. ALL SIGNS SHALL BE POST MOUNTED IF THE CLOSURE TIME EXCEEDS FOUR DAYS.
5. TYPE III BARRICADES MAY BE OMMITTED FOR SINGLE-LANE WEAVES UNDER 24-HOURS IN DURATION. W1-6 SIGNS WILL STILL BE REQUIRED. IF THE WIDTH OF OFFSET IS LESS THAN 6' THEN THE TYPE III BARRICADE WITH ATTACHED ARROW SIGN PANEL CAN BE ELIMINATED IN THE TAPER AREAS.
6. WHEN THE LENGTH OF THE SHIFTED SEGMENT (DISTANCE BETWEEN WEAVE POINTS) IS LESS THAN 1500', DOUBLE REVERSE CURVE SIGNS (W24-1) SHOULD BE USED INSTEAD OF THE REVERSE CURVE (W1-4) SIGNS. ARROWS ON THE 4'X8' "ALL TRAFFIC" SIGNS SHALL BE THE SAME SHAPE.
7. THE NUMBER OF ARROWS ON THESE SIGNS SHALL MATCH THE NUMBER OF LANES OPEN TO TRAFFIC.

SYMBOLS

- DIRECTION OF TRAFFIC
- WORK AREA
- SIGN ON PORTABLE OR PERMANENT SUPPORT
- TYPE II BARRICADE OR DRUM WITH MONO-DIRECTIONAL STEADY BURNING LIGHT
- TEMPORARY CONCRETE BARRIER WALL
- IMPACT ATTENUATOR
- W24-1-48

ALL DIMENSIONS ARE IN INCHES (MILLIMETERS) UNLESS OTHERWISE SHOWN

TRANSYSTEMS

USER NAME = footemj	DESIGNED - D.W.S.	REVISED - J.A.F. 02-06	
	DRAWN -	REVISED - S.P.B. 01-07	
PLOT SCALE = 50.0000 ' / In.	CHECKED -	REVISED - S.P.B. 12-09	
PLOT DATE = 3/4/2019	DATE - 02-87	REVISED - M.D. 06-13	

STATE OF ILLINOIS
DEPARTMENT OF TRANSPORTATION

TRAFFIC CONTROL DETAILS FOR FREEWAY SINGLE & MULTI–LANE WEAVE

SCALE: NONE | SHEET 8 OF 20 SHEETS | STA. TO STA.

F.A. RTE.	SECTION	COUNTY	TOTAL SHEETS	SHEET NO.
			898	668
	TC-09	CONTRACT NO.62R27		
		ILLINOIS	FED. AID PROJECT	

MODEL: Default
FILE NAME: pw:\\IL084EBIONTEG.illinois.gov:PWIDOT\Documents\IDOT Offices\District 1\Projects\Dist\d22x34\CADData\CADsheets\tc09.dgn

tc09.dgn 3/4/2019 10:24:46 AM User=footemj

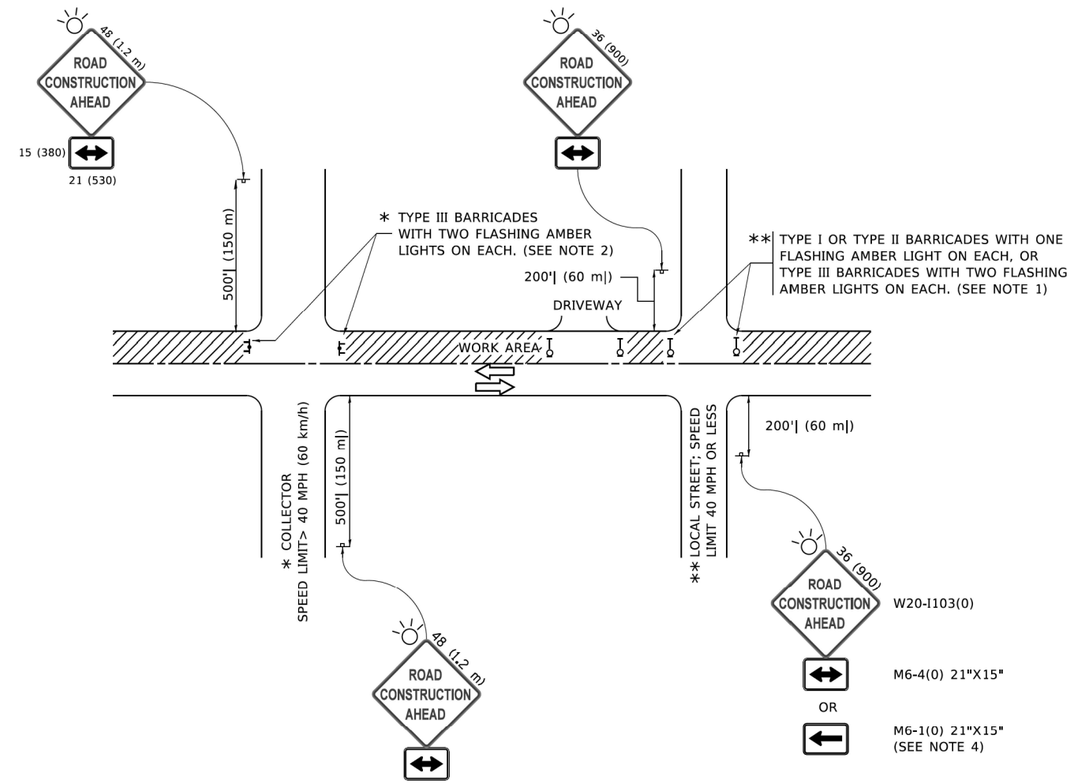

NOTES:

1. SIDE ROAD WITH A SPEED LIMIT OF 40 MPH (60 km/h) OR LESS AS SHOWN ON THE DRAWING AND AS DIRECTED BY THE ENGINEER:

   a) ONE "ROAD CONSTRUCTION AHEAD" SIGN 36 x 36 (900x900) WITH A FLASHER MOUNTED ON IT APPROXIMATELY 200' (60 m) IN ADVANCE OF THE MAIN ROUTE.

   b) THE CLOSED PORTION OF THE MAIN ROUTE SHALL BE PROTECTED BY BLOCKING WITH TYPE I, TYPE II OR TYPE III BARRICADES, 1/3 OF THE CROSS SECTION OF THE CLOSED PORTION.

2. SIDE ROAD WITH A SPEED LIMIT GREATER THAN 40 MPH (60 km/h) AS SHOWN ON THE DRAWING AND AS DIRECTED BY THE ENGINEER:

   a) ONE "ROAD CONSTRUCTION AHEAD" SIGN 48 x 48 (1.2 m x 1.2 m) WITH A FLASHER MOUNTED ON IT APPROXIMATELY 500' (150 m) IN ADVANCE OF THE MAIN ROUTE.

   b) THE CLOSED PORTION OF THE MAIN ROUTE SHALL BE PROTECTED BY BLOCKING WITH TYPE III BARRICADES, 1/2 OF THE CROSS SECTION OF THE CLOSED PORTION.

3. CONES MAY BE SUBSTITUTED FOR BARRICADES OR DRUMS AT HALF THE SPACING DURING DAY OPERATIONS. CONES SHALL BE A MINIMUM OF 28 (710) IN HEIGHT.

4. WHEN THE SIDE ROAD LIES BETWEEN THE BEGINNING OF THE MAINLINE SIGNING AND THE WORK ZONE, A SINGLE HEADED ARROW (M6-1) SHALL BE USED IN LIEU OF THE DOUBLE HEADED ARROW (M6-4).

5. WHEN WORK IS BEING PERFORMED ON A SIDE ROAD OR DRIVEWAY, FOLLOW THE APPLICABLE STANDARD(S). THE DIRECTIONAL ARROW (M6-1 OR M6-4) SHALL BE COVERED OR REMOVED WHEN NO LONGER CONSISTENT WITH THE TRAFFIC CONTROL SET-UP.

6. ADVANCE WARNING SIGNS ARE TO BE OMITTED ON DRIVEWAYS UNLESS OTHERWISE SPECIFIED IN THE PLANS OR BY THE ENGINEER.

7. THE TRAFFIC CONTROL AND PROTECTION FOR SIDE ROADS, INTERSECTIONS, AND DRIVEWAYS SHALL BE INCLUDED IN THE COST OF SPECIFIED TRAFFIC CONTROL STANDARDS OR ITEMS.

All dimensions are in inches (millimeters) unless otherwise shown.

MODEL: Default
FILE NAME: pw:\\il.084BIDINTEG.illinois.gov:PWIDOT\Documents\IDOT Offices\District 1\Projects\Dist5d22x34\CADData\CADsheets\tc10.dgn

TRANSYSTEMS

USER NAME = footem]	DESIGNED - L.H.A.	REVISED - A. HOUSEH 10-15-96	
	DRAWN -	REVISED - T. RAMMACHER 01-06-00	
PLOT SCALE = 50.0000 ' / in.	CHECKED -	REVISED - A. SCHUETZE 07-01-13	
PLOT DATE = 3/4/2019	DATE - 06-89	REVISED - A. SCHUETZE 09-15-16	

STATE OF ILLINOIS
DEPARTMENT OF TRANSPORTATION

TRAFFIC CONTROL AND PROTECTION FOR SIDE ROADS, INTERSECTIONS, AND DRIVEWAYS

SCALE: NONE | SHEET 9 OF 20 SHEETS | STA. TO STA.

F.A. RTE.	SECTION	COUNTY	TOTAL SHEETS	SHEET NO.
			898	669
	TC-10	CONTRACT NO.62R27		
	ILLINOIS	FED. AID PROJECT		

tc10.dgn 3/4/2019 10:27:07 AM User=footemi

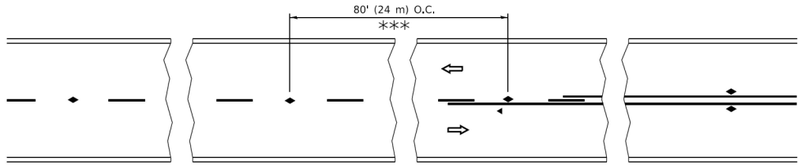

*** REDUCE TO 40' (12 m) O.C. ON CURVES WITH POSTED OR ADVISORY SPEED 45 M.P.H. (70 km/h) OR LESS.

TWO–LANE/TWO–WAY

SEE FIGURE 3B-14 MUTCD

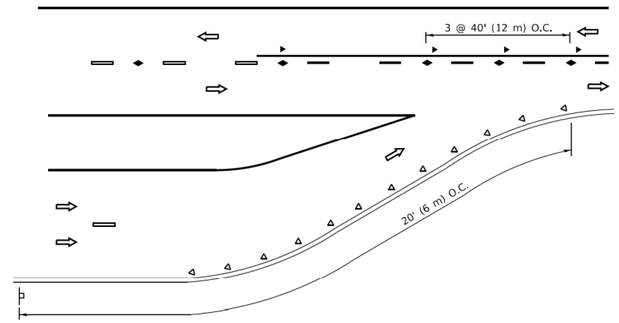

LANE REDUCTION TRANSITION

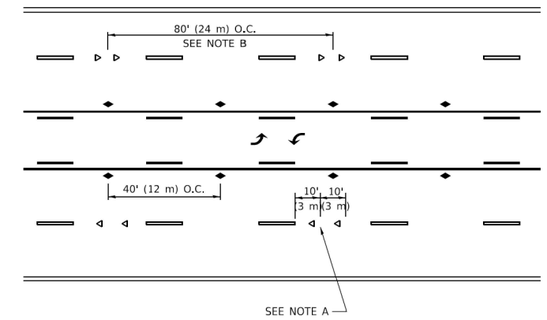

TWO–WAY LEFT TURN

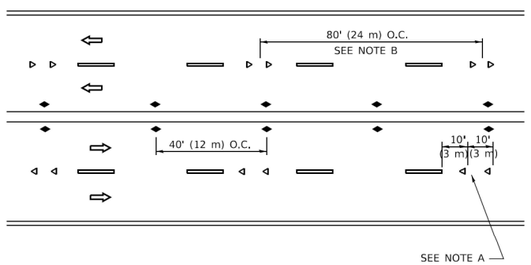

MULTI–LANE/UNDIVIDED

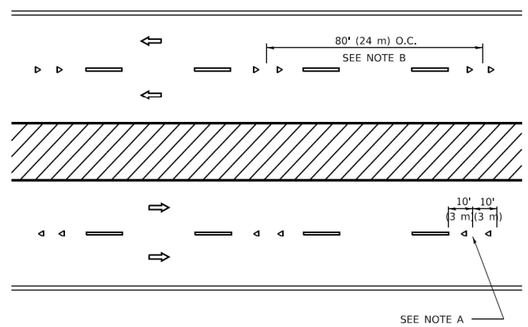

MULTI–LANE/DIVIDED

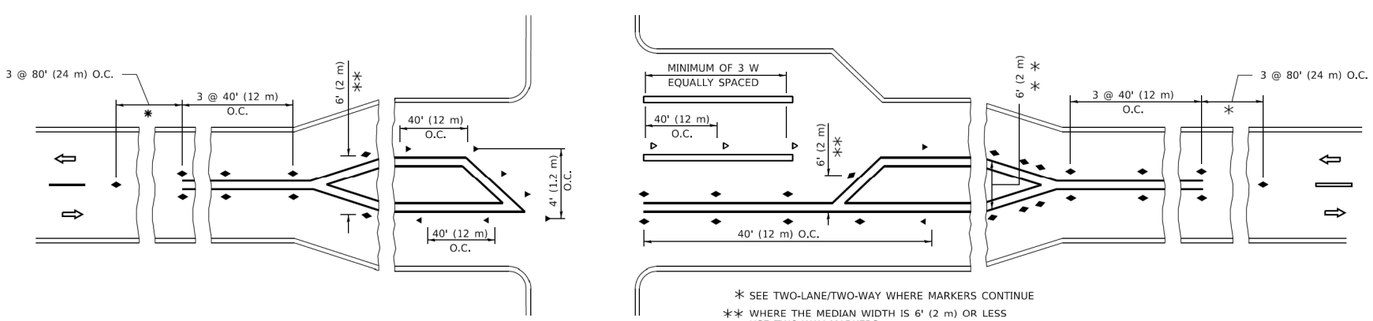

* SEE TWO-LANE/TWO-WAY WHERE MARKERS CONTINUE

** WHERE THE MEDIAN WIDTH IS 6' (2 m) OR LESS USE TWO-WAY MARKERS.

TURN LANES

GENERAL NOTES

1. MARKERS USED WITH DASHED LINES SHALL BE CENTERED IN THE GAP BETWEEN SEGMENTS.
2. MARKERS USED ADJACENT TO SOLID LINES SHALL BE OFFSET 2 TO 3 (50 TO 75) TOWARD TRAFFIC AS SHOWN.
3. MARKERS THROUGH TANGENTS LESS THAN 500' (150 m) IN LENGTH BETWEEN CURVES SHALL BE INSTALLED AT THE LESSER OF THE TWO CURVE SPACINGS.
4. MARKERS ARE TO BE USED ADJACENT TO BOTH SOLID WHITE LINES IN DUAL LEFT TURN LANES

SYMBOLS

- YELLOW STRIPE
- WHITE STRIPE
- ONE-WAY AMBER MARKER
- ONE-WAY CRYSTAL MARKER (W/O)
- TWO-WAY AMBER MARKER

LANE MARKER NOTES

A. USE DOUBLE LANE LINE MARKERS SPACED AS SHOWN.

B. REDUCE TO 40' (12 m) O.C. ON CURVES WHERE ADVISORY SPEEDS ARE 10 M.P.H (20 km/h) LOWER THAN POSTED SPEEDS.

DESIGN NOTES

1. DOUBLE LANE LINE MARKERS SHALL BE USED UNLESS SPECIFIED OTHERWISE.
2. EXCEPT AS SHOWN ON THE LANE REDUCTION TRANSITION AND FREEWAY EXIT RAMP DETAIL, MARKERS ARE NOT TO BE SPECIFIED ON RIGHT EDGE LINES.
3. THE EXACT MARKER LIMITS, SPACING, AND COLOR SHALL BE INCLUDED IN THE PLANS WHEN STANDARD SPECIFICATIONS ARE NOT BEING USED.
4. MARKERS SHOULD NOT BE USED ALONGSIDE CURBS EXCEPT FOR EXTREMELY SHORT SECTIONS OF CURBS WHERE NOT MORE THAN TWO MARKERS WOULD BE INVOLVED.

All dimensions are in inches (millimeters) unless otherwise shown.

MODEL: Default
FILE NAME: pw:\\IL084EBIDINTEG.illinois.gov:PWIDOT\Documents\IDOT Offices\District 1\Projects\District22x34\CADData\CADsheets\tc11.dgn

TRANSYSTEMS

USER NAME = footemj	DESIGNED -	REVISED - T. RAMMACHER 03-12-99	
	DRAWN -	REVISED - T. RAMMACHER 01-06-00	
PLOT SCALE = 50,0000 ' / in.	CHECKED -	REVISED - C. JUCIUS 09-09-09	
PLOT DATE = 3/4/2019	DATE -	REVISED - C. JUCIUS 07-01-13	

STATE OF ILLINOIS
DEPARTMENT OF TRANSPORTATION

TYPICAL APPLICATIONS
RAISED REFLECTIVE PAVEMENT MARKERS (SNOW–PLOW RESISTANT)

SCALE: NONE | SHEET 10 OF 20 SHEETS | STA. TO STA.

F.A. RTE.	SECTION	COUNTY	TOTAL SHEETS	SHEET NO.
			898	670
	TC–11	CONTRACT NO.62R27		
		ILLINOIS	FED. AID PROJECT	

tc11.dgn 3/4/2019 10:29:08 AM User=footemj

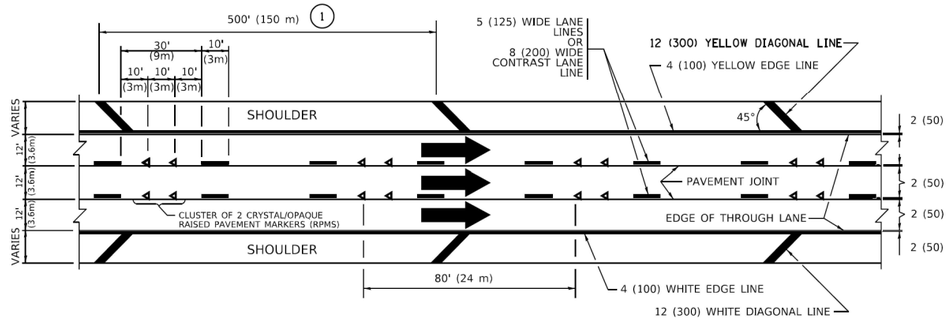

TYPICAL EDGE LINES & LANE LINES

PAVEMENT MARKING MATERIALS

1. THERMOPLASTIC PAVEMENT MARKING LINE SHALL BE USED FOR ALL EDGE LINES, GORE LINES, AND DIAGONAL LINES ON HMA PAVEMENTS.
2. POLYUREA OR MODIFIED URETHANE PAVEMENT MARKING LINE SHALL BE USED FOR ALL EDGE LINES, GORE LINES, AND DIAGONAL LINES ON PCC PAVEMENTS.
3. PREFORMED PLASTIC PAVEMENT MARKING LINE TYPE D, INLAID OR GROOVE IN, SHALL BE USED FOR ALL LANE LINES ON HMA PAVEMENTS.
4. CONTRAST PREFORMED PLASTIC PAVEMENT MARKING LINE TYPE B, GROOVE IN, SHALL BE USED FOR ALL LANE LINES ON PCC PAVEMENT.

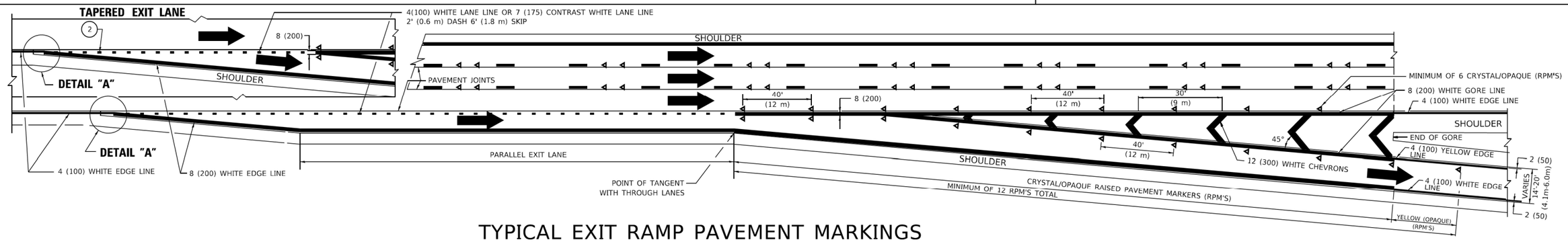

TYPICAL EXIT RAMP PAVEMENT MARKINGS

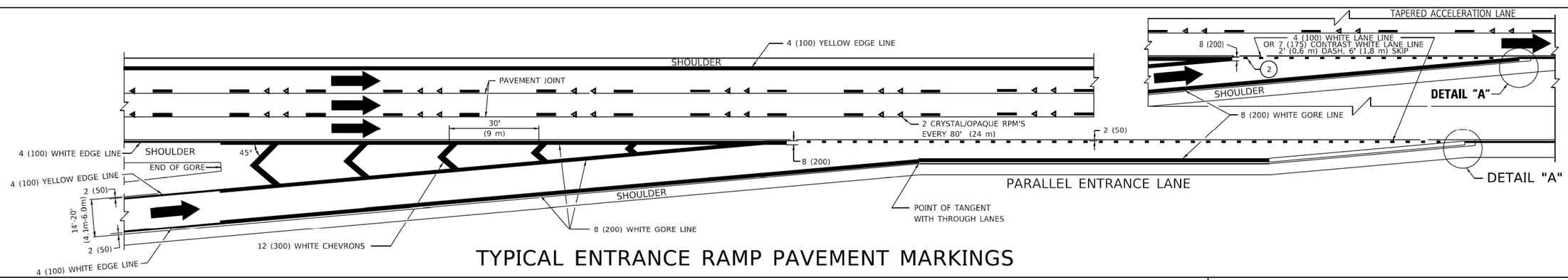

TYPICAL ENTRANCE RAMP PAVEMENT MARKINGS

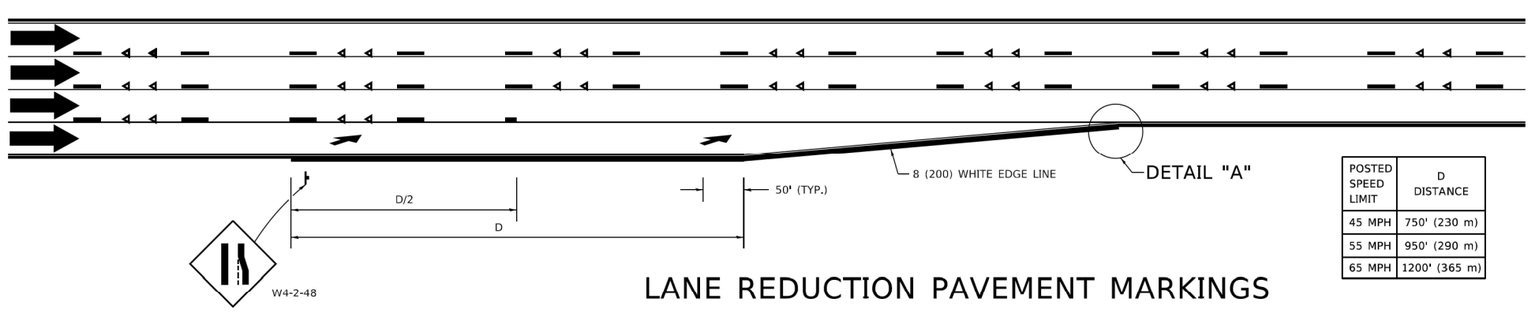

LANE REDUCTION PAVEMENT MARKINGS

POSTED SPEED LIMIT	D DISTANCE
45 MPH	750' (230 m)
55 MPH	950' (290 m)
65 MPH	1200' (365 m)

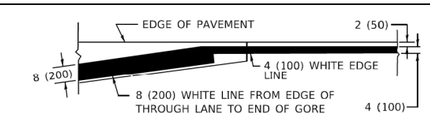

DETAIL "A"

NOTES:

1. THE DIAGONAL LINES SHALL BE SPACED AT 40' (12 m) C-C ACROSS ALL STRUCTURES WHICH ARE 500' (150 m) OR LESS IN LENGTH. THE DIAGONAL LINES ARE NOT REQUIRED ON SHOULDERS WHICH ARE 6' (1.8 m) OR LESS IN WIDTH.
2. 4" (2' DASH, 6' SKIP) MARKING ON TAPERED ENTRANCE AND EXIT RAMP SHALL BE OMITTED ON TANGENT SECTIONS.

MODEL: Default
FILE NAME: pw:\\illdot-pw.bentley.com:PWIDOT\Documents\IDOT Offices\District 1\Projects\DistStd22-34\CADData\CADsheets\tc12.dgn

TRANSYSTEMS

USER NAME = Lawrence.DeManche	DESIGNED - D.W.S.	REVISED - S.P.B. 01-10	
	DRAWN -	REVISED - M.D. 05-13	
PLOT SCALE = 100.0000 ' / in.	CHECKED -	REVISED - M.D. 09-17	
PLOT DATE = 11/18/2022	DATE - 01-90	REVISED - K. SMITH 11-18-22	

STATE OF ILLINOIS
DEPARTMENT OF TRANSPORTATION

MULTI-LANE FREEWAY
PAVEMENT MARKING DETAILS

SCALE: NONE | SHEET 11 OF 20 SHEETS | STA. TO STA.

F.A. RTE.	SECTION	COUNTY	TOTAL SHEETS	SHEET NO.
			898	671
	TC-12	CONTRACT NO.62R27		
		ILLINOIS FED. AID PROJECT		

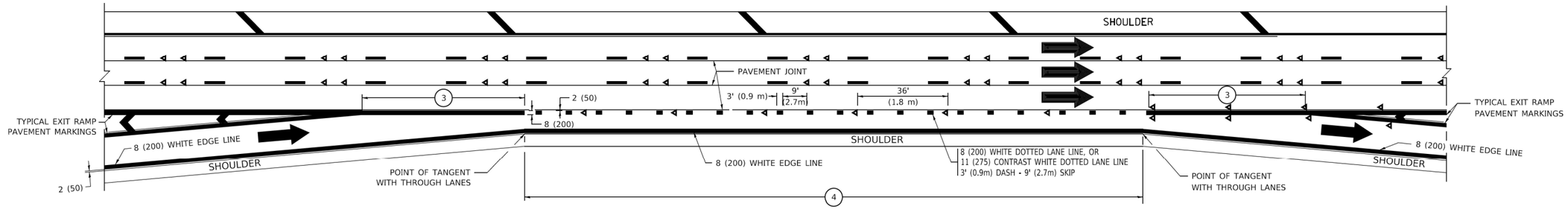

AUXILIARY LANE MARKINGS

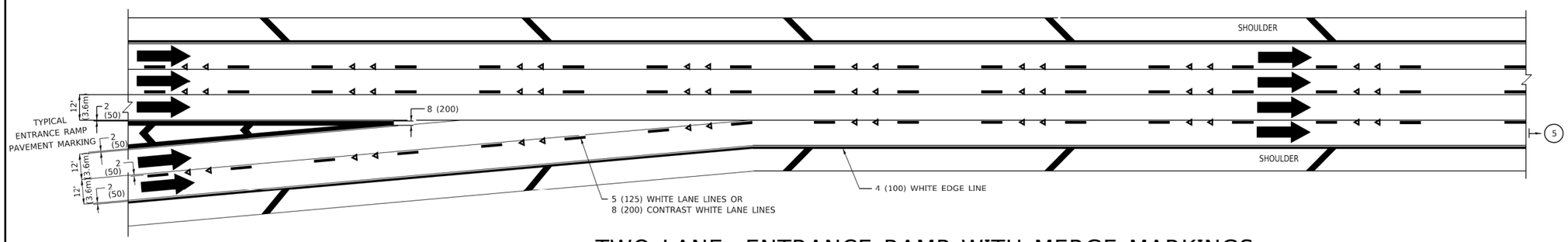

TWO LANE ENTRANCE RAMP WITH MERGE MARKINGS

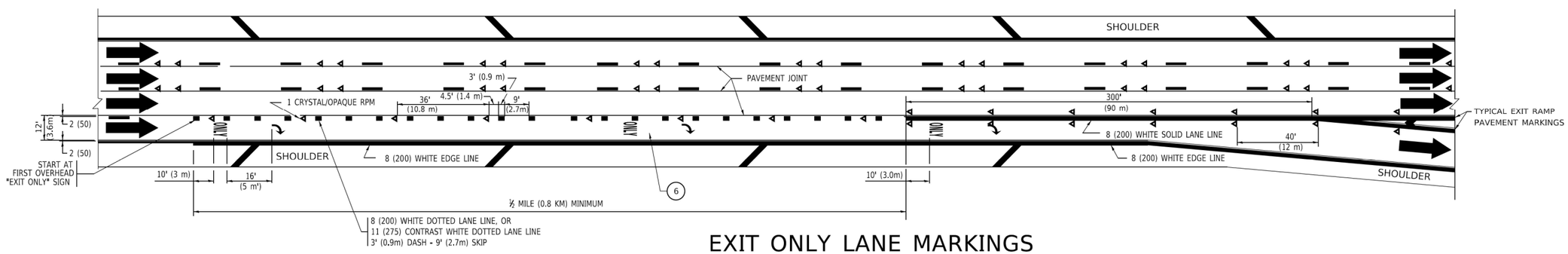

EXIT ONLY LANE MARKINGS

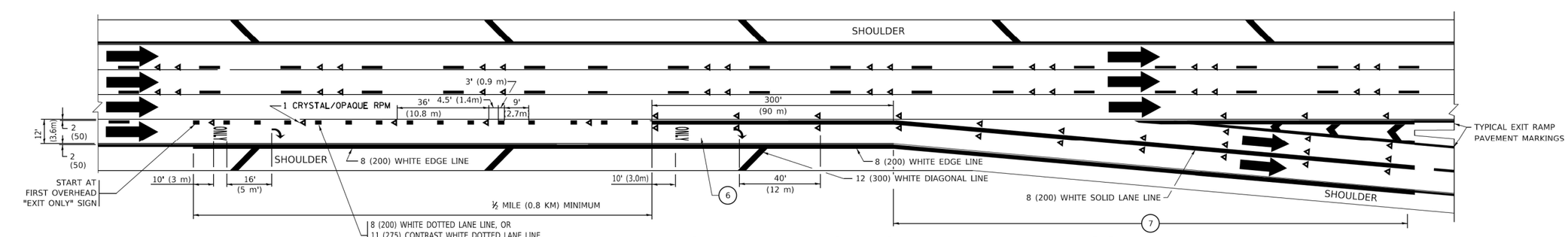

EXIT ONLY WITH OPTION LANE MARKINGS

NOTES:

3. OMIT WHEN LENGTH OF AUXILIARY LANE IS LESS THAN 500' (150 m).
4. 8-INCH WIDE DOTTED LANE LINE MARKINGS SHALL BE USED WHEN THE LENGTH OF THE AUXILIARY LANE IS 2 MILES OR LESS.
5. FOR TWO-LANE ENTRANCE RAMP, IF RIGHT LANE ENDS, USE TYPICAL ENTRANCE RAMP PAVEMENT MARKINGS.
6. ONLY AND ARROWS EQUALLY SPACED, 500' (150 m) MAXIMUM SPACING. FULL SIZE LETTERS AND ARROW SHALL BE USED..
7. CONTINUE 8" SOLID LANE LINE THROUGH EXIT TO END OF PAVED GORE.

TRANSYSTEMS

USER NAME = footemj	DESIGNED - D.W.S.	REVISED - J.A.F. 02-06	
	DRAWN -	REVISED - S.P.B. 01-07	
PLOT SCALE = 50.0000 ' / in.	CHECKED -	REVISED - S.P.B. 01-10	
PLOT DATE = 3/4/2019	DATE - 01-90	REVISED - M.D. 09-17	

STATE OF ILLINOIS
DEPARTMENT OF TRANSPORTATION

MULTI-LANE FREEWAY
PAVEMENT MARKING DETAILS

SCALE: NONE | SHEET 12 OF 20 SHEETS | STA. | TO STA.

F.A. RTE.	SECTION	COUNTY	TOTAL SHEETS	SHEET NO.
			898	672
TC-12		CONTRACT NO.62R27		
		ILLINOIS	FED. AID PROJECT	

MODEL: Default
FILE NAME: pw:\\IL084EBIDINTEG.illinois.gov:PWIDOT\Documents\IDOT Offices\District 1\Projects\Dist54\22x34\CADData\CADsheets\tc12.dgn

tc12.dgn 3/4/2019 10:32:33 AM User=footemi

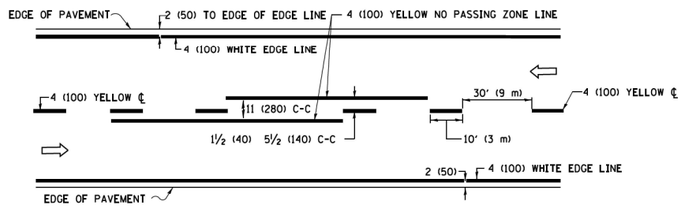

2–LANE ROADWAY

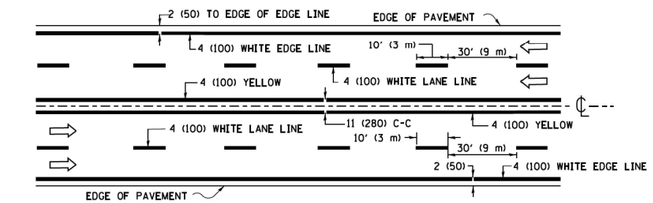

MULTI–LANE UNDIVIDED

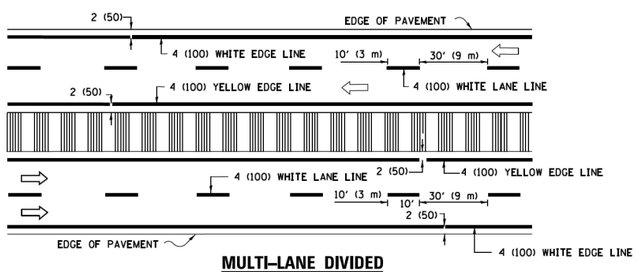

MULTI–LANE DIVIDED
WITH MEDIAN

TYPICAL LANE AND EDGE LINE MARKING

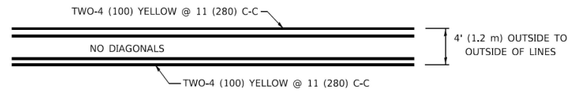

4' (1.2 m) WIDE MEDIANS ONLY

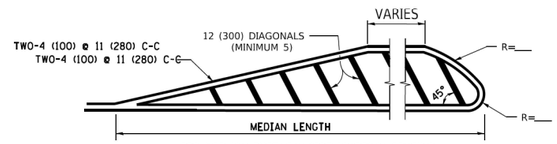

FOR MEDIAN LENGTHS WHERE DIAGONAL SPACING CANNOT BE ATTAINED, USE 5 (FIVE) EQUALLY SPACED DIAGONAL LINES.

DIAGONAL LINE SPACING: 50' (15 m) C-C (LESS THAN 30MPH (50 km/h))
75' (25 m) C-C 30MPH (50 km/h) TO 45MPH (70 km/h))
150' (45 m) C-C (MORE THAN 45MPH (70 km/h))

MEDIANS OVER 4' (1.2 m) WIDE

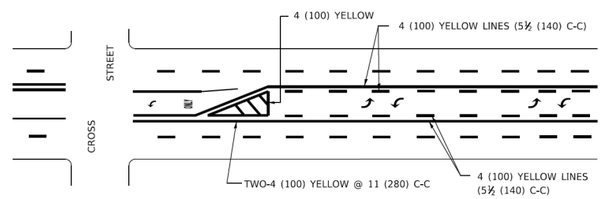

A MINIMUM OF TWO PAIRS OF TURN ARROWS SHALL BE USED, WHITE IN COLOR. ADDITIONAL PAIRS SHALL BE PLACED AT 200' (60 m) TO 300' (90 m) INTERVALS.

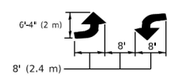

MEDIAN WITH TWO–WAY LEFT TURN LANE

TYPICAL PAINTED MEDIAN MARKING

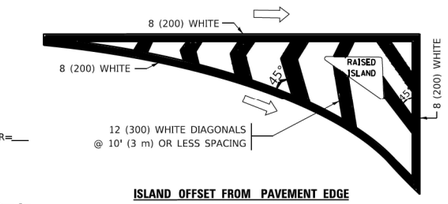

ISLAND OFFSET FROM PAVEMENT EDGE

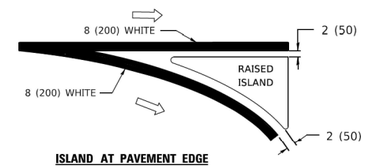

ISLAND AT PAVEMENT EDGE

TYPICAL ISLAND MARKING

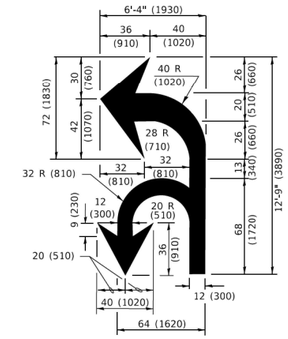

COMBINATION LEFT AND U–TURN

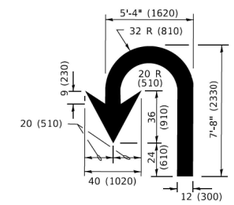

U–TURN

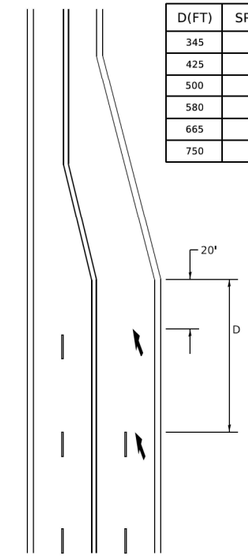

D(FT)	SPEED LIMIT
345	30
425	35
500	40
580	45
665	50
750	55

LANE REDUCTION TRANSITION

* LANE REDUCTION ARROWS REQUIRED AT SPEEDS OF 45 MPH OR GREATER OR WHEN SPECIFIED IN PLANS.

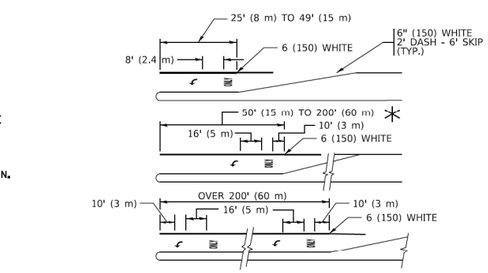

FULL SIZE LETTERS 8' (2.4 m) AND ARROWS SHALL BE USED.
AREA = 15.6 SQ. FT. (1.5 m²) **ONLY** AREA = 20.8 SQ. FT. (1.9 m²)

* TURN LANES IN EXCESS OF 400' (120 m) IN LENGTH MAY HAVE AN ADDITIONAL SET OF ARROW - "ONLY" INSTALLED MIDWAY BETWEEN THE OTHER TWO SETS OF ARROW - "ONLY".

TYPICAL LEFT (OR RIGHT) TURN LANE

TYPICAL TURN LANE MARKING

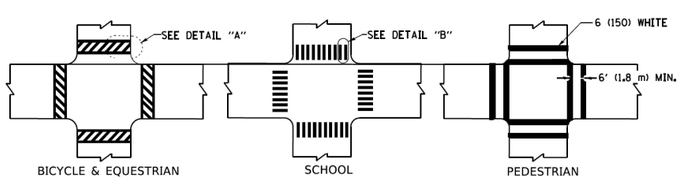

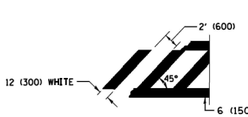

DETAIL "A"

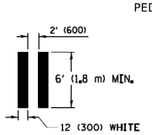

DETAIL "B"

TYPICAL CROSSWALK MARKING

* MARKINGS SHALL BE INSTALLED PARALLEL TO THE CENTERLINE OF THE ROAD WHICH IT CROSSES

TYPE OF MARKING	WIDTH OF LINE	PATTERN	COLOR	SPACING / REMARKS
CENTERLINE ON 2 LANE PAVEMENT	4 (100)	SKIP-DASH	YELLOW	10' (3 m) LINE WITH 30' (9 m) SPACE
CENTERLINE ON MULTI-LANE UNDIVIDED PAVEMENT	2 @ 4 (100)	SOLID	YELLOW	11 (280) C-C
NO PASSING ZONE LINES: FOR ONE DIRECTION FOR BOTH DIRECTIONS	4 (100) 2 @ 4 (100)	SOLID SOLID	YELLOW YELLOW	5½ (140) C-C FROM SKIP-DASH CENTERLINE 11 (280) C-C OMIT SKIP-DASH CENTERLINE BETWEEN
LANE LINES	4 (100) 5 (125) ON FREEWAYS	SKIP-DASH SKIP-DASH	WHITE WHITE	10' (3 m) LINE WITH 30' (9 m) SPACE
DOTTED LINES (EXTENSIONS OF CENTER, LANE OR TURN LANE MARKINGS)	SAME AS LINE BEING EXTENDED	SKIP-DASH	SAME AS LINE BEING EXTENDED	2' (600) LINE WITH 6' (1.8 m) SPACE
EDGE LINES	4 (100)	SOLID	YELLOW-LEFT WHITE-RIGHT	OUTLINE MEDIANS IN YELLOW
TURN LANE MARKINGS	6 (150) LINE; FULL SIZE LETTERS & SYMBOLS (8' (2.4m))	SOLID	WHITE	SEE TYPICAL TURN LANE MARKING DETAIL
TWO WAY LEFT TURN MARKING	2 @ 4 (100) EACH DIRECTION 8' (2.4m) LEFT ARROW	SKIP-DASH AND SOLID IN PAIRS	YELLOW WHITE	10' (3 m) LINE WITH 30' (9 m) SPACE FOR SKIP-DASH; 5½ (140) C-C BETWEEN SOLID LINE AND SKIP-DASH LINE SEE TYPICAL TWO-WAY LEFT TURN MARKING DETAIL
CROSSWALK LINES (PEDESTRIAN) A. DIAGONALS (BIKE & EQUESTRIAN) B. LONGITUDINAL BARS (SCHOOL)	2 @ 6 (150) 12 (300) @ 45° 12 (300) @ 90°	SOLID SOLID SOLID	WHITE WHITE WHITE	NOT LESS THAN 6' (1.8 m) APART 2' (600) APART 2' (600) APART SEE TYPICAL CROSSWALK MARKING DETAILS.
STOP LINES	24 (600)	SOLID	WHITE	PLACE 4' (1.2 m) IN ADVANCE OF AND PARALLEL TO CROSSWALK, IF PRESENT. OTHERWISE, PLACE AT DESIRED STOPPING POINT. PARALLEL TO CROSSROAD CENTERLINE, WHERE POSSIBLE
PAINTED MEDIANS	2 @ 4 (100) WITH 12 (300) DIAGONALS @ 45° NO DIAGONALS USED FOR 4' (1.2 m) WIDE MEDIANS	SOLID	YELLOW: TWO WAY TRAFFIC WHITE: ONE WAY TRAFFIC	11 (280) C-C FOR THE DOUBLE LINE SEE TYPICAL PAINTED MEDIAN MARKING.
GORE MARKING AND CHANNELIZING LINES	8 (200) WITH 12 (300) DIAGONALS @ 45°	SOLID	WHITE	DIAGONALS: 15' (4.5 m) C-C (LESS THAN 30MPH (50 km/h)) 20' (6 m) C-C 30MPH (50 km/h) TO 45MPH (70 km/h)) 30' (9 m) C-C (OVER 45MPH (70 km/h))
RAILROAD CROSSING	24 (600) TRANSVERSE LINES; "RR" IS 6' (1.8 m) LETTERS; 16 (400) LINE FOR "X"	SOLID	WHITE	SEE STATE STANDARD 780001 AREA OF: "R"=3.6 SQ. FT. (0.33 m²) EACH "X"=54.0 SQ. FT. (5.0 m²)
SHOULDER DIAGONALS (REQUIRED FOR SHOULDERS ≥ 8')	12 (300) @ 45°	SOLID	WHITE - RIGHT YELLOW - LEFT	50' (15 m) C-C (LESS THAN 30MPH (50 km/h)) 75' (25 m) C-C (30 MPH (50 km/h) TO 45MPH (70 km/h)) 150' (45 m) C-C (OVER 45MPH (70 km/h))
U TURN ARROW	SEE DETAIL	SOLID	WHITE	16.3 SF
2 ARROW COMBINATION LEFT AND U TURN	SEE DETAIL	SOLID	WHITE	30.4 SF

FOR FURTHER DETAILS ON PAVEMENT MARKING REFER TO STANDARD SPECIFICATIONS FOR ROAD AND BRIDGE CONSTRUCTION AND STATE STANDARD 780001.

All dimensions are in inches (millimeters) unless otherwise shown.

TRANSYSTEMS

USER NAME = footemj	DESIGNED - EVERS	REVISED - C. JUCIUS 09-09-09	
	DRAWN -	REVISED - C. JUCIUS 07-01-13	
PLOT SCALE = 50.0000 ' / in.	CHECKED -	REVISED - C. JUCIUS 12-21-15	
PLOT DATE = 3/4/2019	DATE - 03-19-90	REVISED - C. JUCIUS 04-12-16	

STATE OF ILLINOIS
DEPARTMENT OF TRANSPORTATION

DISTRICT ONE
TYPICAL PAVEMENT MARKINGS

SCALE: NONE | SHEET 13 OF 20 SHEETS | STA. TO STA.

F.A. RTE.	SECTION	COUNTY	TOTAL SHEETS	SHEET NO.
			898	673
	TC–13	CONTRACT NO.62R27		
		ILLINOIS FED. AID PROJECT		

MODEL: Default
FILE NAME: pw:\\IL084EBIDINTEG.illinois.gov:PWIDOT\Documents\IDOT Offices\District 1\Projects\Dist5to22x34\CADData\CADsheets\tc13.dgn

tc13.dgn 3/4/2019 10:34:37 AM User=footemj

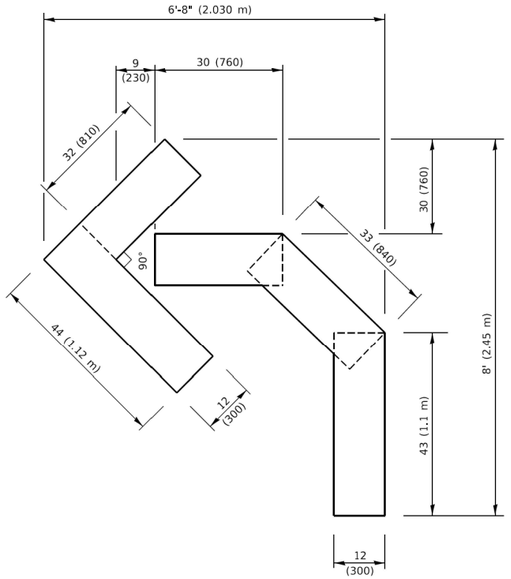

QUANTITY

4 (100) LINE = 45.5 ft. (13.9 m)
15.2 sq. ft. (1.41 sq. m)

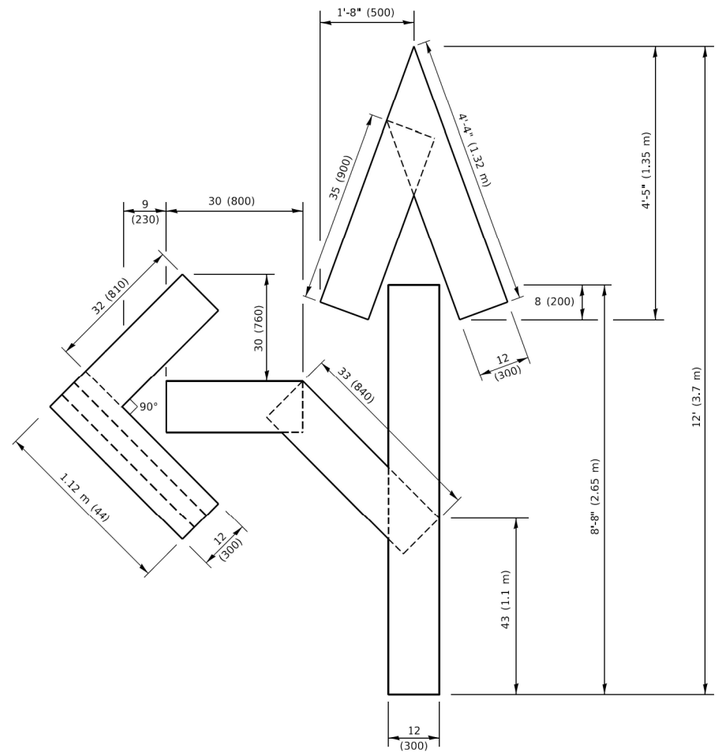

QUANTITY

4 (100) LINE = 82.5 ft. (25.1 m)
27.5 sq. ft. (2.53 sq. m)

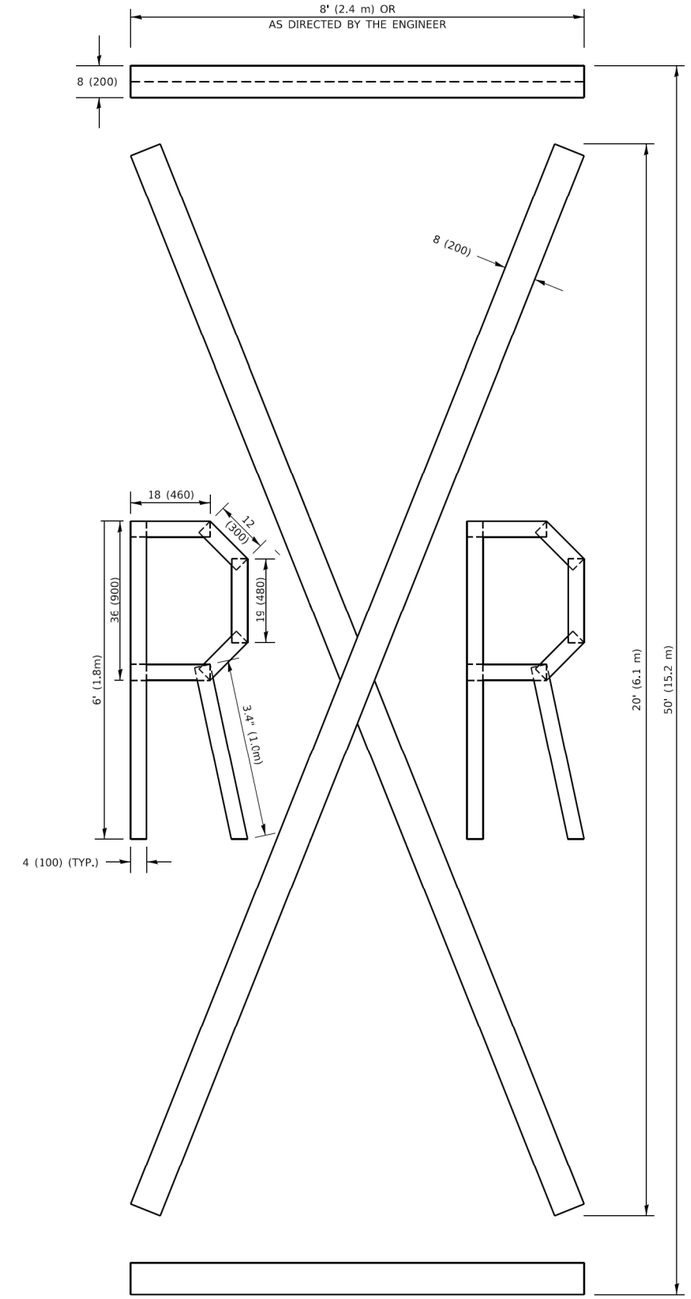

QUANTITY

4 (100) LINE = 225.9 ft. (68.9 m)
75.3 sq. ft. (6.99 sq. m)

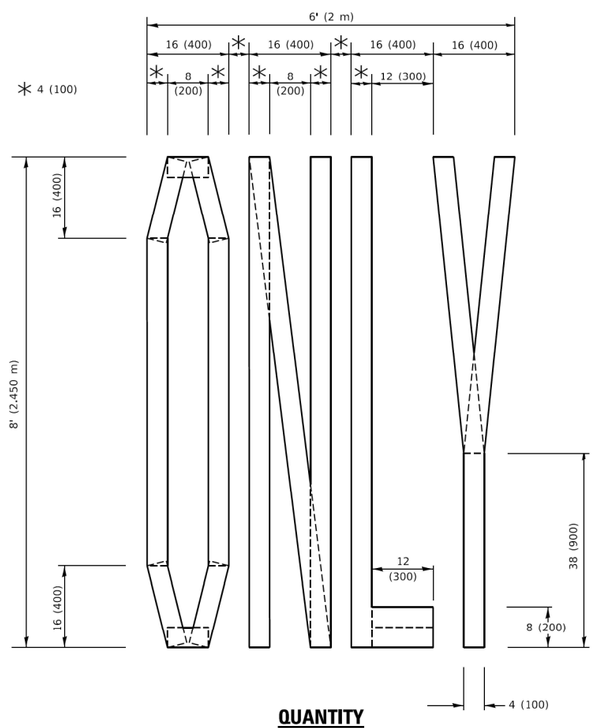

QUANTITY

4 (100) LINE = 64.1 ft. (19.5 m)
21.4 sq. ft. (1.99 sq. m)

NOTE:

ALL QUANTITIES OF PLACEMENT ARE REPRESENTED IN LINEAR FEET OF 4" LINES TO MATCH THE 4" TEMPORARY TAPE PAY ITEM AND REPRESENTS THE TOTAL QUANTITY OF 4" TAPE REQUIRED.

All dimensions are in inches (millimeters) unless otherwise shown.

MODEL: Default
FILE NAME: pw:\\IL084EBIDINTEG.illinois.gov:PWIDOT\Documents\IDOT Offices\District 1\Projects\DistStd22x34\CADData\CADsheets\tc16.dgn

TRANSYSTEMS

USER NAME = footemj	DESIGNED -	REVISED - T. RAMMACHER 03-02-98	
	DRAWN -	REVISED - E. GOMEZ 08-28-00	
PLOT SCALE = 50.0068 ' / in.	CHECKED -	REVISED - E. GOMEZ 08-28-00	
PLOT DATE = 3/4/2019	DATE - 09-18-94	REVISED - A. SCHUETZE 09-15-16	

STATE OF ILLINOIS
DEPARTMENT OF TRANSPORTATION

SHORT TERM PAVEMENT MARKING LETTERS AND SYMBOLS

SCALE: NONE | SHEET 14 OF 20 SHEETS | STA. TO STA.

F.A. RTE.	SECTION	COUNTY	TOTAL SHEETS	SHEET NO.
			898	674
	TC-16	CONTRACT NO.62R27		
	ILLINOIS	FED. AID PROJECT		

tc16.dgn 3/4/2019 10:37:33 AM User=footemj

PARTIAL RAMP CLOSURE DETAILS

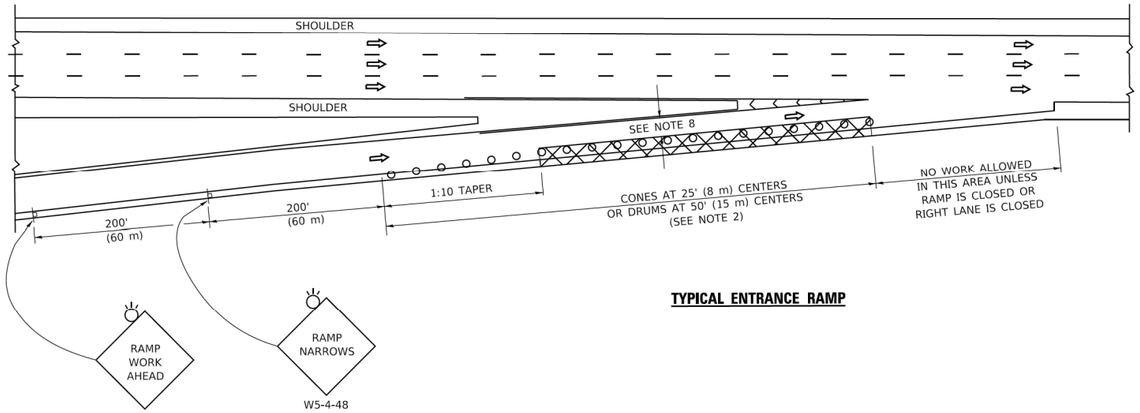

TYPICAL ENTRANCE RAMP

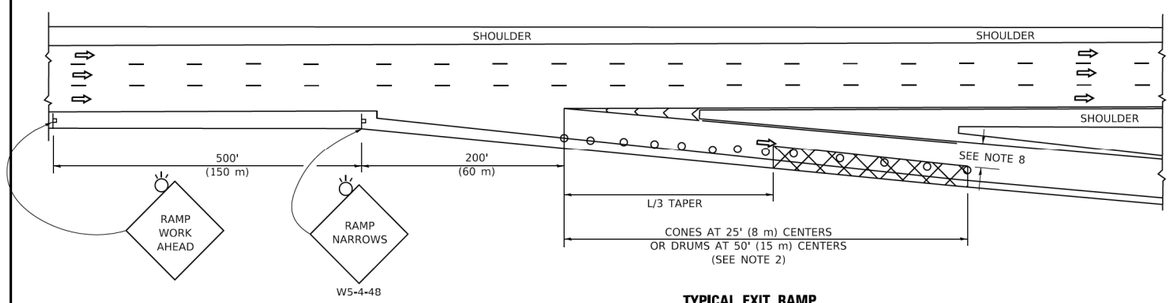

TYPICAL EXIT RAMP

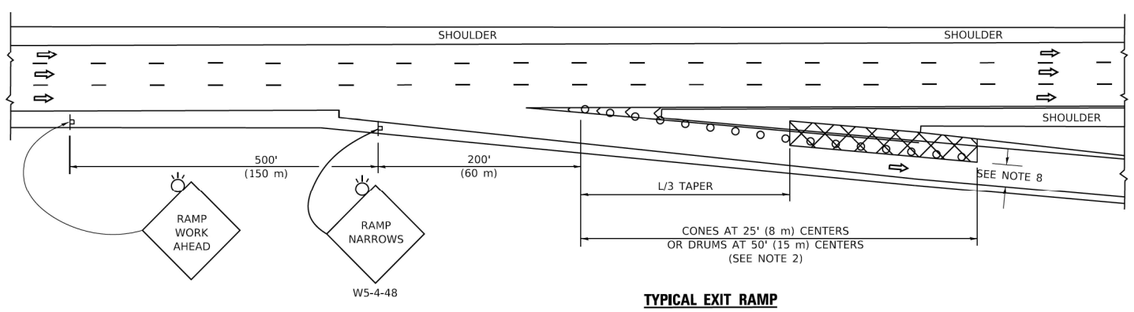

TYPICAL EXIT RAMP

SHOULDER CLOSURE DETAILS

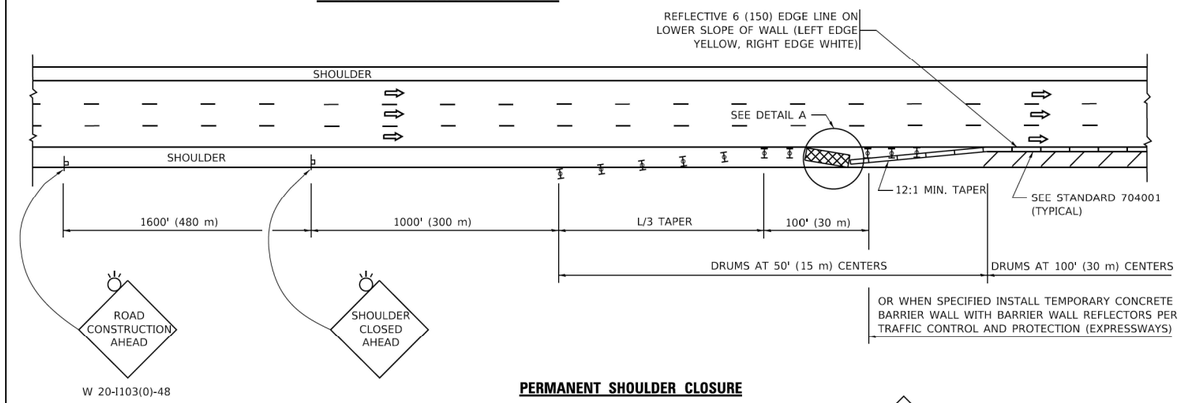

PERMANENT SHOULDER CLOSURE

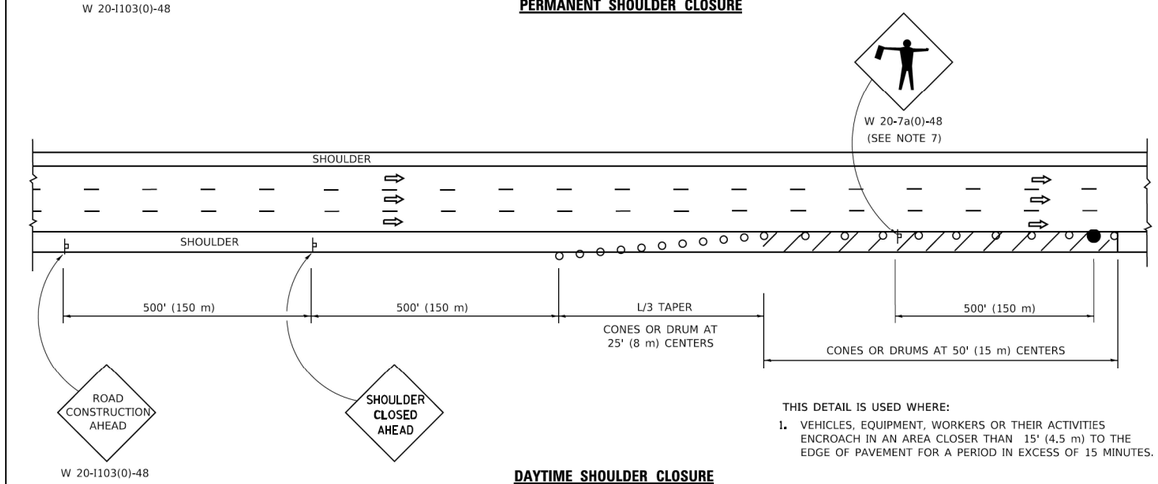

DAYTIME SHOULDER CLOSURE

THIS DETAIL IS USED WHERE:

1. VEHICLES, EQUIPMENT, WORKERS OR THEIR ACTIVITIES ENCROACH IN AN AREA CLOSER THAN 15' (4.5 m) TO THE EDGE OF PAVEMENT FOR A PERIOD IN EXCESS OF 15 MINUTES.

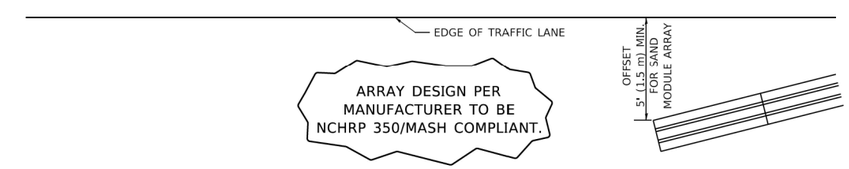

DETAIL "A"
IMPACT ATTENTUATOR, TEMPORARY
(SEE NOTE 5)

SYMBOLS

- ACTIVE WORK AREA
- SIGN ON PORTABLE OR PERMANENT SUPPORT
- FLAGGER WITH CONTROL SIGN
- TYPE II BARRICADE OR DRUM
- CONE, DRUM OR BARRICADE
- IMPACT ATTENUATOR OF TYPE AND TEST LEVEL SPECIFIED

GENERAL NOTES:

1. THE "L" DISTANCE EQUALS:

SPEED LIMIT	FORMULAS	
45 mph (80 km/h) OR GREATER:	METRIC	ENGLISH
	L=0.65(W)(S)	L=(W)(S)

W = WIDTH OF OFFSET IN FEET (METERS)
S = NORMAL POSTED SPEED MPH (KM/H)

2. TYPE II BARRICADES OR DRUMS ARE REQUIRED FOR ALL NIGHTTIME CLOSURES. TYPE II BARRICADES OR DRUMS WITH MONODIRECTIONAL STEADY BURN LIGHTS ARE REQUIRED FOR DELINEATING OBSTICLES, EXCAVATIONS, OR HAZARDS EXCEEDING 100 FT (30m) IN LENGTH AT NIGHT.
3. ALL SIGNS SHALL BE POST MOUNTED IF THE CLOSURE TIME EXCEEDS FOUR DAYS.
4. FLASHING LIGHTS SHALL BE USED DURING THE HOURS OF DARKNESS AND SHALL BE INSTALLED ABOVE THE FIRST TWO SETS OF SIGNS.
5. THE IMPACT ATTENTUATOR, TEMPORARY IS NOT REQUIRED WHEN THE TEMPORARY CONCRETE BARRIER WALL IS PROTECTED BY OR IS TIED INTO THE EXISTING GUARDRAIL. IF OFFSET IS LESS THAN 5 FEET USE NARROW USE TYPE DEVICE TO MEET NCHRP350/MASH.
6. AUTHORIZATION FROM THE DISTRICT'S BUREAU OF TRAFFIC IS REQUIRED FOR ALL FREEWAY CLOSURES.
7. THE FLAGGER AND FLAGGER SIGN ARE REQUIRED AT THE ABOVE WORK SITES WHEN:
   a. FOUR OR MORE WORK VEHICLES ENTER THE TRAFFIC LANES IN A ONE HOUR PERIOD.
   b. THE WORK AVTIVITY REQUIRES FREQUENT ENCROACHMENT INTO THE LANE OPEN TO TRAFFIC.

   THE FLAGGER SHALL BE STATIONED APPROXIMATELY 100' (30 m) TO 200' (60 m) IN ADVANCE OF THE WORKERS.
8. 12' MIN. WIDTH TANGENT SECTION
   16' MIN. WIDTH CURVE SECTION.

ALL DIMENSIONS ARE IN INCHES (MILLIMETERS) UNLESS OTHERWISE SHOWN.

MODEL: Default
FILE NAME: pw:\\IL084EBIDINTEG.illinois.gov:PWIDOT\Documents\IDOT Offices\District 1\Projects\DistStd22x34\CADData\CADsheets\tc17.dgn

TRANSYSTEMS	USER NAME = footemj	DESIGNED -	REVISED - S.P.B. 01-07	STATE OF ILLINOIS DEPARTMENT OF TRANSPORTATION	TRAFFIC CONTROL DETAILS FOR FREEWAY SHOULDER CLOSURES AND PARTIAL RAMP CLOSURES	F.A. RTE.	SECTION	COUNTY	TOTAL SHEETS	SHEET NO.
		DRAWN - D.W.S.	REVISED - S.P.B. 12-09						898	675
	PLOT SCALE = 50.0000 ' / in.	CHECKED -	REVISED - M.D. 06-13				TC-17		CONTRACT NO.62R27	
	PLOT DATE = 3/4/2019	DATE - 11-96	REVISED - M.D. 01-18		SCALE: NONE SHEET 15 OF 20 SHEETS STA. TO STA.			ILLINOIS	FED. AID PROJECT	

tc17.dgn 3/4/2019 10:41:43 AM User=footemj

SIGNING FOR FLAGGING OPERATIONS AT WORK ZONE OPENINGS

WORK ZONE EXIT OPENING

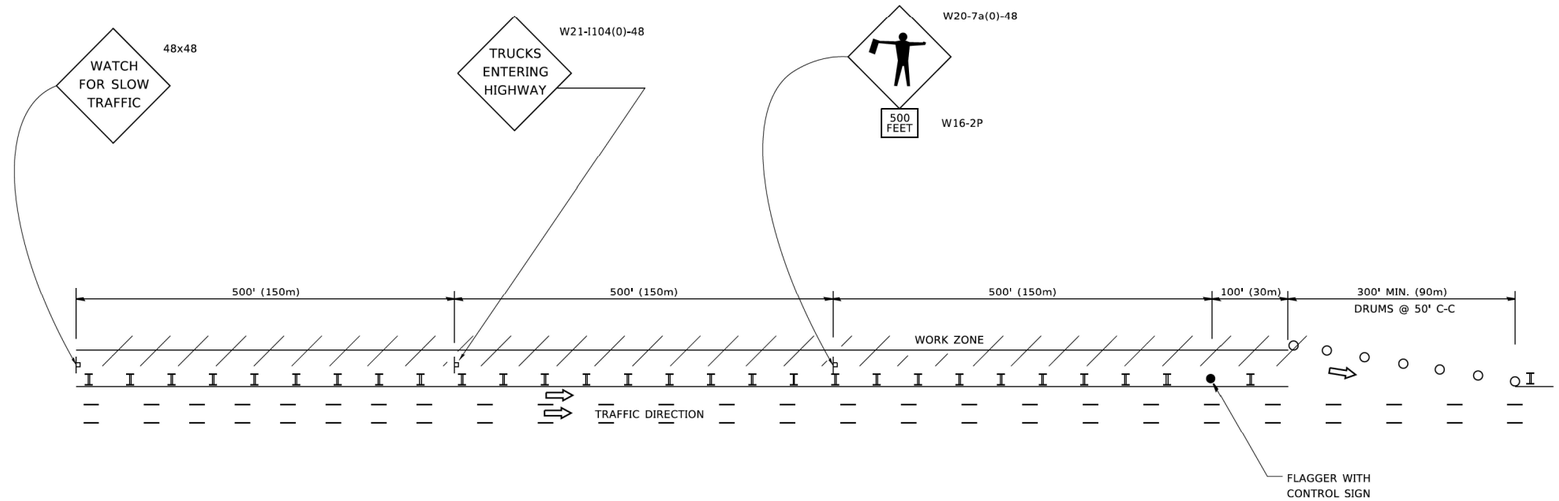

WORK ZONE ENTRY OPENING

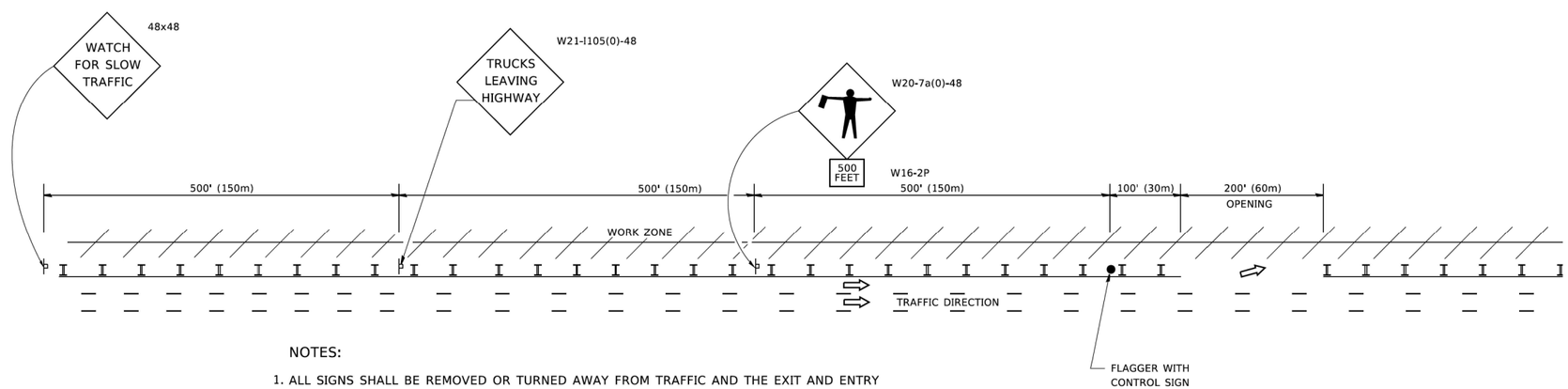

NOTES:

1. ALL SIGNS SHALL BE REMOVED OR TURNED AWAY FROM TRAFFIC AND THE EXIT AND ENTRY OPENINGS SHALL BE CLOSED WHEN THE FLAGGING OPERATION CEASES. NON OPERATING EQUIPMENT SHALL COMPLY WITH ARTICLE 701.11
2. WORK ZONE OPENINGS SHALL BE A MINIMUM OF ONE HALF MILE APART AND A MINIMUM OF ONE QUARTER MILE FROM ALL ENTRANCE AND EXIT RAMPS.
3. EXITING THE WORK ZONE AT ANY PLACE OTHER THAN AT A WORK ZONE EXIT OPENING WILL BE PROHIBITED.
4. ALL VEHICLES SHALL ENTER THE WORK ZONE AT ENTRY OPENINGS, USING THEIR TURN SIGNALS TO WARN MOTORISTS
5. FLAGGERS SHALL NOT STOP TRAFFIC OR DIRECT TRAFFIC INTO AN ADJACENT LANE.

ALL DIMENSIONS ARE IN INCHES (MILLIMETERS) UNLESS OTHERWISE SHOWN

MODEL: Default
FILE NAME: pw:\\IL084EBIDINTEG.illinois.gov:PWIDOT\Documents\IDOT Offices\District 1\Projects\DistStd22x34\CADData\CADsheets\tc18.dgn

TRANSYSTEMS

USER NAME = footemj	DESIGNED -	REVISED -	J.A.F. 02-06
	DRAWN -	REVISED -	S.P.B. 01-07
PLOT SCALE = 50.0000 ' / in.	CHECKED -	REVISED -	S.P.B. 12-09
PLOT DATE = 3/4/2019	DATE -	REVISED -	M.D.06-13

STATE OF ILLINOIS
DEPARTMENT OF TRANSPORTATION

FREEWAY /EXPRESSWAY SIGNING FOR FLAGGING OPERATIONS AT WORK ZONE OPENINGS ON FREEWAYS /EXPRESSWAYS

SCALE: NONE | SHEET 16 OF 20 SHEETS | STA. TO STA.

F.A. RTE.	SECTION	COUNTY	TOTAL SHEETS	SHEET NO.
			898	676
	TC-18	CONTRACT NO.62R27		
		ILLINOIS	FED. AID PROJECT	

tc18.dgn 3/4/2019 10:44:51 AM User=footemi

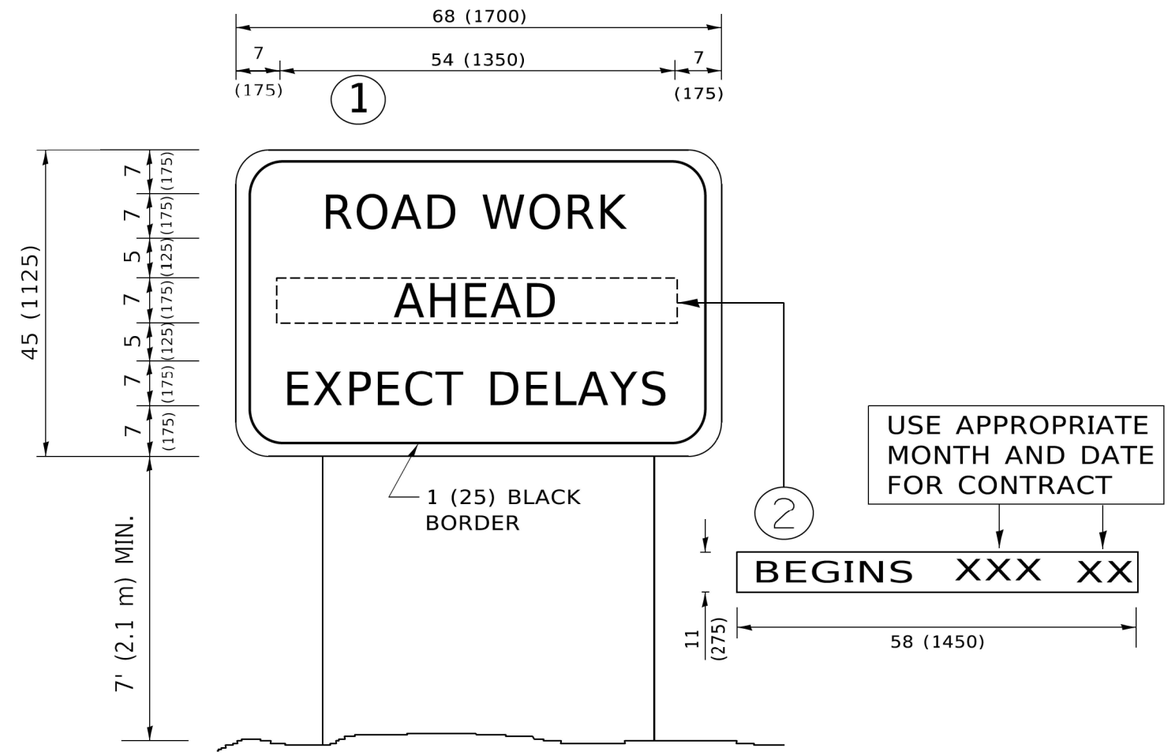

NOTES:

1. USE BLACK LETTERING ON ORANGE BACKGROUND.
2. ERECT SIGNS IN ADVANCE OF THE LOCATION FOR THE "ROAD CONSTRUCTION AHEAD" SIGN AT LOCATIONS AS DIRECTED BY THE ENGINEER.
3. ERECT SIGN (1) WITH INSTALLED PANEL (2) ONE WEEK PRIOR TO THE START OF CONSTRUCTION.
4. REMOVE PANEL (2) SOON AFTER THE START OF CONSTRUCTION.
5. SEE SPECIAL PROVISION FOR "TEMPORARY INFORMATION SIGNING" FOR ADDITIONAL INFORMATION.
6. ONE SIGN ASSEMBLY EQUALS 25.70 SQ. FT. (2.3 SQ. M.)
7. SHALL BE PAID FOR AS TEMPORARY INFORMATION SIGNING.

ALL DIMENSIONS ARE IN INCHES (MILLIMETERS) UNLESS OTHERWISE SHOWN.

MODEL: Default
FILE NAME: pw:\\IL084EBIDINTEG.illinois.gov:PWIDOT\Documents\IDOT Offices\District 1\Projects\Dist5\d22x34\CADData\CADsheets\tc22.dgn

TRANSYSTEMS

USER NAME = footemj	DESIGNED -	REVISED -	R. MIRS 09-15-97
	DRAWN -	REVISED -	R. MIRS 12-11-97
PLOT SCALE = 50.0000 ' / in.	CHECKED -	REVISED -	T. RAMMACHER 02-02-99
PLOT DATE = 3/4/2019	DATE -	REVISED -	C. JUCIUS 01-31-07

STATE OF ILLINOIS
DEPARTMENT OF TRANSPORTATION

ARTERIAL ROAD INFORMATION SIGN

SCALE: NONE | SHEET 17 OF 20 SHEETS | STA. | TO STA.

F.A. RTE.	SECTION	COUNTY	TOTAL SHEETS	SHEET NO.
			898	677
	TC-22	CONTRACT NO.62R27		
		ILLINOIS FED. AID PROJECT		

tc22.dgn 3/4/2019 10:48:10 AM User=footemi

CENTER LANE CLOSURE

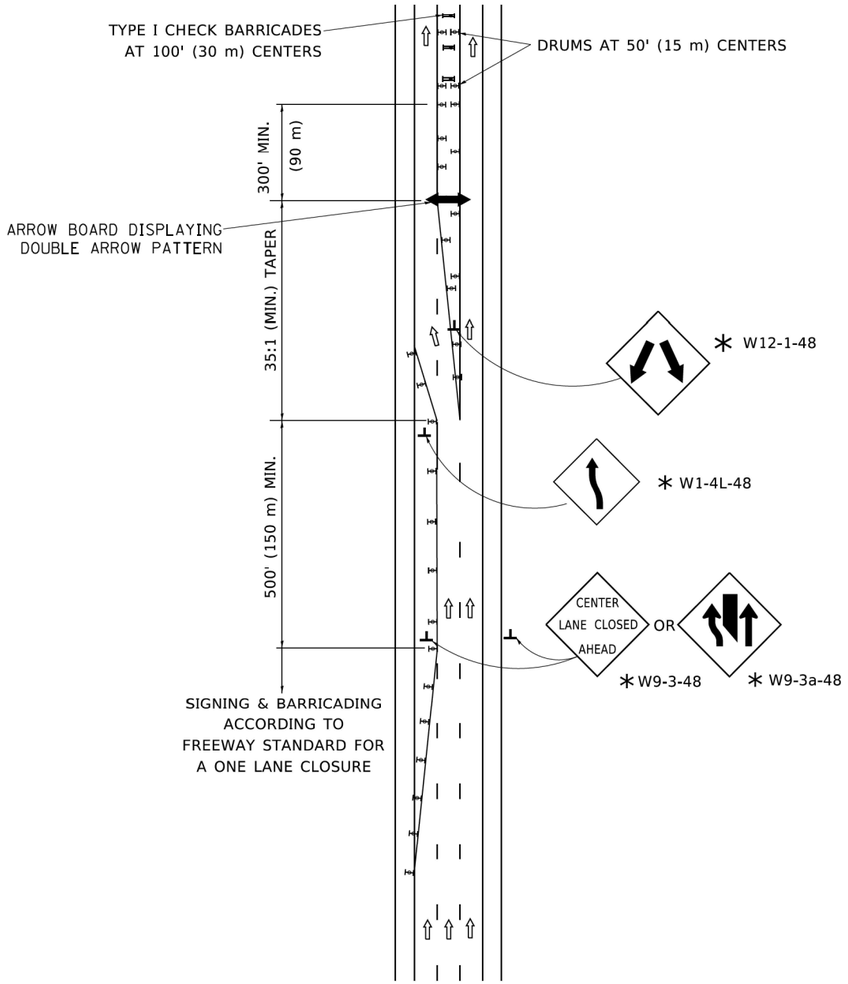

INSTALLATION SEQUENCE

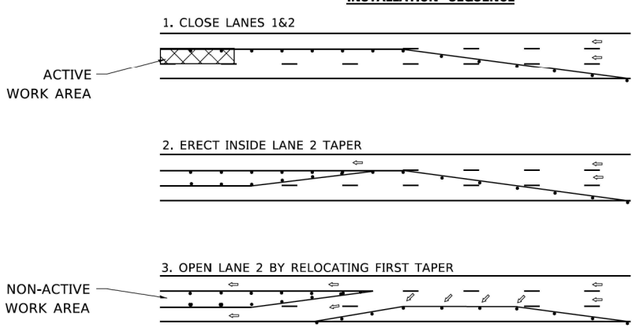

4. REMOVE CLOSURE IN REVERSE ORDER

NOTES:

1. DRUMS WITH STEADY BURN LIGHTS SHALL BE USED AT 50' (15 m) CENTERS ON ALL TAPERS AND TANGENTS IN ADVANCE OF WORK AREA.
2. CLOSURE SHALL BE USED ONLY FOR OPERATIONS LASTING 72 HOURS OR LESS.
3. CENTER LANE CLOSURE CONFIGURATION IS NOT TO BE USED WITH WORKERS PRESENT.

SHOULDER LANE

NOTE:
CLOSURE SHALL BE USED ONLY FOR OPERATIONS LASTING 72 HOURS OR LESS.

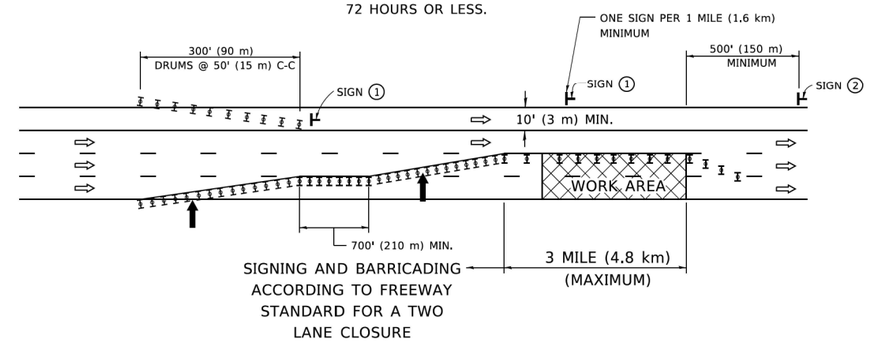

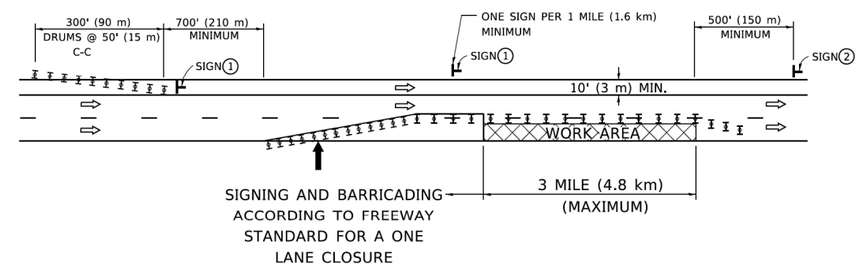

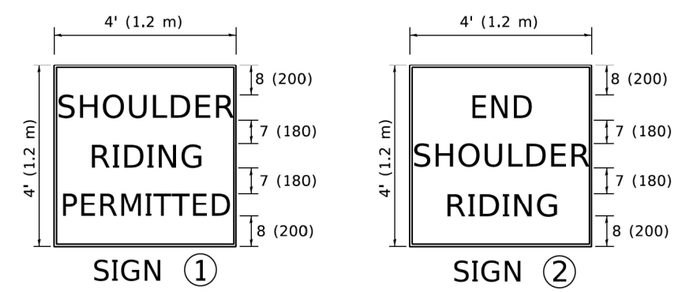

6 (150) SERIES "C" LEGEND
BLACK LEGEND
WHITE REFLECT. BACKGROUND
1 (25) BORDER

SYMBOLS

- DIRECTION OF TRAFFIC
- ARROWBOARD
- ACTIVE WORK AREA
- SIGN ON PORTABLE OR PERMANENT SUPPORT *
- TYPE II BARRICADE, OR DRUM WITH MONO-DIRECTIONAL STEADY BURN LIGHT

ALL DIMENSIONS ARE IN INCHES (MILLIMETERS) UNLESS OTHERWISE SHOWN

* ALL SIGNS SHALL BE MOUNTED AT A MINIMUM HEIGHT OF 5' (1.5 m).

MODEL: Default
FILE NAME: pw:\\IL084EBIDINTEG.illinois.gov:PWIDOT\Documents\IDOT Offices\District 1\Projects\StdSd22x34\CADData\CADsheets\tc25.dgn

TRANSYSTEMS

USER NAME = footemj	DESIGNED -	REVISED - J.A.F. 04-03	
	DRAWN -	REVISED - S.P.B. 01-07	
PLOT SCALE = 50.0000 ' / in.	CHECKED -	REVISED - S.P.B. 12-09	
PLOT DATE = 3/4/2019	DATE -	REVISED -	

STATE OF ILLINOIS
DEPARTMENT OF TRANSPORTATION

TRAFFIC CONTROL DETAILS FOR FREEWAY
CENTER LANE CLOSURE SHOULDER LANE

SCALE: NONE | SHEET 18 OF 20 SHEETS | STA. TO STA.

F.A. RTE.	SECTION	COUNTY	TOTAL SHEETS	SHEET NO.
			898	678
	TC-25	CONTRACT NO.62R27		
		ILLINOIS	FED. AID PROJECT	

tc25.dgn 3/4/2019 10:57:58 AM User=footemj

STANDARD DESIGN FOR MILE POST

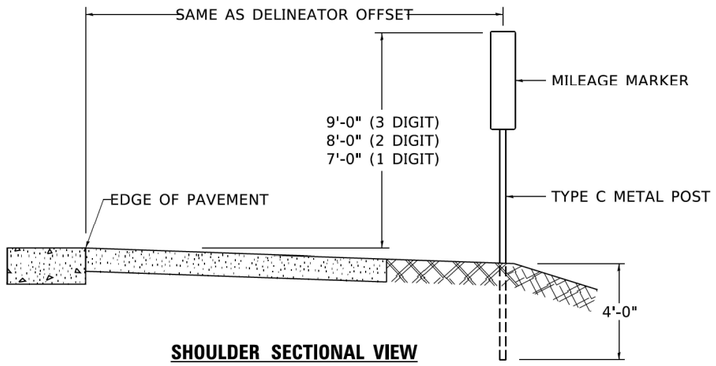

SHOULDER SECTIONAL VIEW

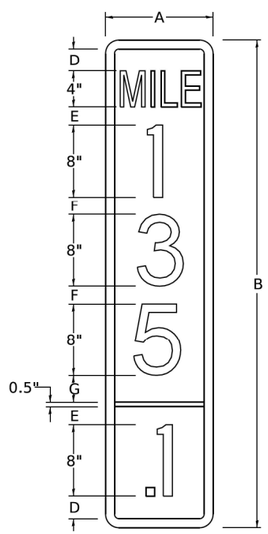

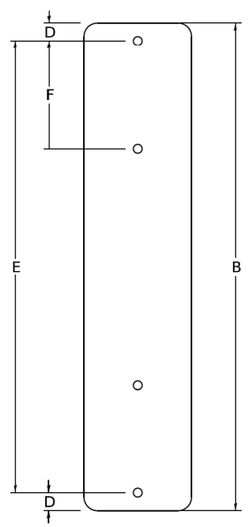

SIGN SIZE	DIMENSIONS							
	A	B	C	D	E	F	G	DIGIT
12 x 24	12.0	24.0	1.5	1.5	1.5	N/A	1.5	1
12 x 36	12.0	36.0	1.5	2.0	2.0	2.0	1.5	2
12 x 48	12.0	48.0	1.5	2.5	2.0	2.0	2.5	3

BLANK	A	B	C	D	E	F
B9-1224	12.0	24.0	1.5	2.0	20.0	N/A
B9-1236	12.0	36.0	1.5	2.0	32.0	12.0
B9-1248	12.0	48.0	1.5	2.0	44.0	12.0

SIGN SIZE	SERIES					BORDER	BLANK STD.
	LINES						
	1	2	3	4	5		
12 x 24	4C	8D	4C	N/A	N/A	0.5	B9-1224
12 x 36	4C	8D	8D	4C	N/A	0.5	B9-1236
12 x 48	4C	8D	8D	8D	4C	0.5	B9-1248

BORDER AND RADIUS LAYOUT

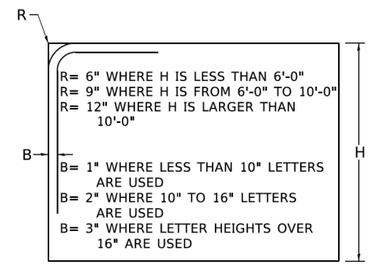

MAJOR GUIDE SIGN LAYOUT

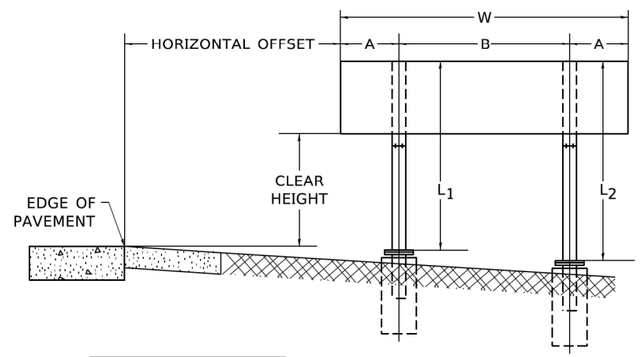

NUMBER OF STEEL SUPPORTS	A	B
2	.2 W	.6 W
3	.15 W	.35 W
4	.125 W	.25 W
5	.1 W	.2 W

"L_1 IS THE LENGTH OF SUPPORT, NOT INCLUDING THE STUB PROJECTION, CLOSEST TO THE EDGE OF THE PAVEMENT.

"A" IS THE DISTANCE FROM THE SIGN EDGE TO THE CENTERLINE OF THE NEAREST SUPPORT. "B" IS THE DISTANCE BETWEEN CENTERLINES OF SUPPORTS.

GORE SIGNS

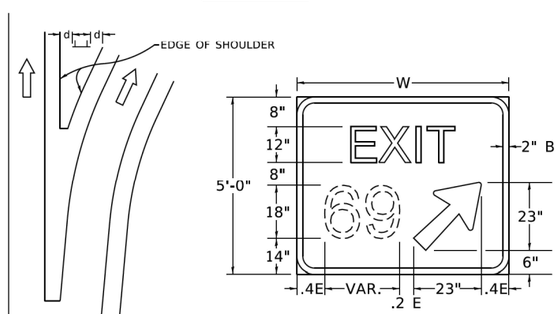

DIGITS	W	d
1 OR 2	6'-0"	2'-0"
3	7'-6"	1'-3"
4 OR 5	9'-0"	1'-0"

E= WIDTH - VAR. - 23"

STANDARD ARROWS FOR INTERSTATE GUIDE SIGNS

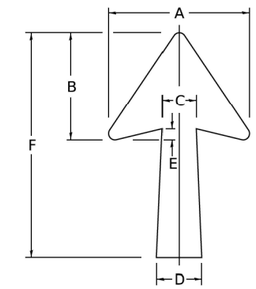

ARROW SYMBOL	A	B	C	D	E	F	R
24¼ x 15⅛	15⅛	11 9/16	3¾	5	1 9/16	24¼	13/16
29¼ x 18¼	18¼	14	4½	6	1½	29¼	¾
35⅝ x 22¼	22¼	17	5⅜	7⅛	1¾	35⅝	1
18¼ x 11¼	11¼	8¾	3⅛	3⅞		18¼	

NOTE: D & F ARE RECOMMENDED DIMENSIONS. TAPER SHOULD BE HELD CONSTANT FOR LONGER OR SHORTER SHAFT LENGTHS

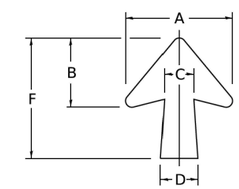

ARROW SYMBOL	A	B	C	D	E	F	R
17¼ x 14¼	14¼	9 13/16	3⅜	4½	15/16	17¼	¾
20¼ x 17¼	17¼	11¾	4⅜	5⅝	1½	20¼	
25 x 21⅞	21⅞	14¼	5	6¾	1¾	25	1
9 9/16 x 8 7/16	8 7/16	5 7/16	2 5/16	2 15/16		9 9/16	½

DOWN ARROWS

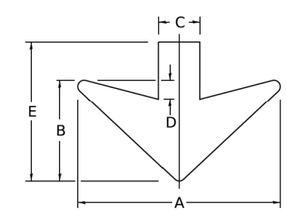

ARROW SYMBOL	A	B	C	D	E	R
16½ x 24	24	12	5	1½	16½	¾
22 x 32	32	16	6½	3	22	1

MODEL: Default
FILE NAME: pw:\\IL084EBIDINTEG.illinois.gov:PWIDOT\Documents\IDOT Offices\District 1\Projects\District22x34\CADData\CADsheets\tc27.dgn

TRANSYSTEMS

USER NAME = footemj	DESIGNED -	REVISED -	02-04-2009
	DRAWN -	REVISED -	
PLOT SCALE = 50.0000 ' / in.	CHECKED -	REVISED -	
PLOT DATE = 3/4/2019	DATE - 03-08-1984	REVISED -	

STATE OF ILLINOIS
DEPARTMENT OF TRANSPORTATION

MILE POST MARKERS – GORE SIGNS
MAJOR GUIDE SIGN LAYOUT – ARROWS

SCALE: NONE | SHEET 19 OF 20 SHEETS | STA. TO STA.

F.A. RTE.	SECTION	COUNTY	TOTAL SHEETS	SHEET NO.
			898	679
	TC–27 (TS–2341–1)	CONTRACT NO.62R27		
		ILLINOIS	FED. AID PROJECT	

tc27.dgn 3/4/2019 11:01:14 AM User=footemj

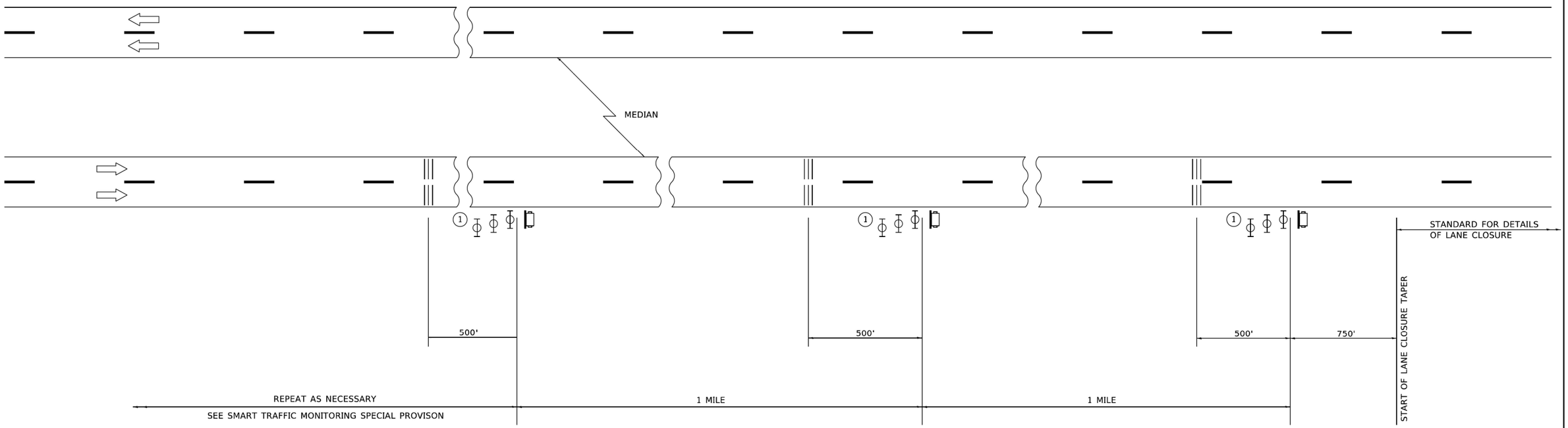

SYMBOLS

PORTABLE CHANGEABLE MESSAGE SIGN

TEMPORARY RUMBLE STRIP (SPECIAL)

TYPE II BARRICADES, DRUMS, OR VERTICAL BARRICADES WITH MONODIRECTIONAL FLASHING LIGHT.

(1) THREE TYPE II BARRICADES, DRUMS, OR VERTICAL BARRICADES AT 25' (8 m) CENTERS.

GENERAL NOTE:

THIS DETAIL IS TO BE USED IN CONJUNCTION WITH SMART TRAFFIC MONITORING SYSTEM AND TEMPORARY RUMBLE STRIP (SPECIAL) SPECIAL PROVISIONS.

TRAFFIC CONTROL SHOWN IN THIS DETAIL IS TO BE PROVIDED IN ADDITION TO ANY TEMPORARY TRAFFIC CONTROL SHOWN ON STATE STANDARDS, DISTRICT DETAILS, AND MAINTENANCE OF TRAFFIC PLANS.

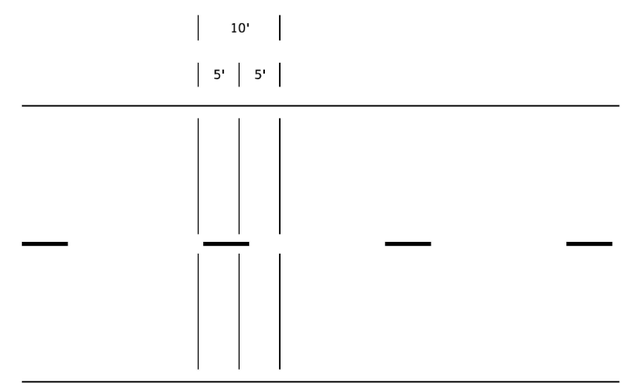

TEMPORARY RUMBLE STRIP (SPECIAL)

MODEL: Default
FILE NAME: pw:\\ildot-pw.bentley.com:PWIDOT\Documents\IDOT Offices\District 1\Projects\DistStd22x34\CADData\CADsheets\tc33.dgn

TRANSYSTEMS

USER NAME = Lawrence.DeManche	DESIGNED -	REVISED - K. SMITH 11-18-22	
	DRAWN -	REVISED -	
PLOT SCALE = 100.0000 ' / In.	CHECKED -	REVISED -	
PLOT DATE = 11/18/2022	DATE -	REVISED -	

STATE OF ILLINOIS
DEPARTMENT OF TRANSPORTATION

SMART TRAFFIC MONITORING SYSTEM
TYPICAL LAYOUT

SCALE: NONE | SHEET 20 OF 20 SHEETS | STA. | TO STA.

F.A. RTE.	SECTION	COUNTY	TOTAL SHEETS	SHEET NO.
			898	680
TC–33		CONTRACT NO.62R27		
	ILLINOIS	FED. AID PROJECT		

NOTE:

1. PROPOSED TOPSOIL DEPTHS PLACED VARY. 6" DEPTH FOR REGION OF PROPOSED TOPSOIL IS SHOWN ON CROSS SECTIONS. HOWEVER, EROSION CONTROL AND LANDSCAPING PLANS SHOW PROPOSED TOPSOIL AND OTHER MATERIALS USED IN PLACING PROPOSED TOPSOIL TO APPROPRIATE DEPTHS DEPENDING ON THE LOCATION OF THE GRADING.
2. PROPOSED DRAINAGE ELEMENTS SHOWN IN CROSS SECTION ARE NOT SHOWN CONSTRUCTED IN THE CORRECT STAGE. PROPOSED DRAINAGE ELEMENTS SHOWN IN CROSS SECTION ARE ONLY REPRESENTATIVE OF THE FINAL CONDITION. PLEASE REFER TO DRAINAGE PLANS FOR CONSTRUCTION STAGING AND TIMING OF INSTALLATION OF PROPOSED DRAINAGE ELEMENTS.

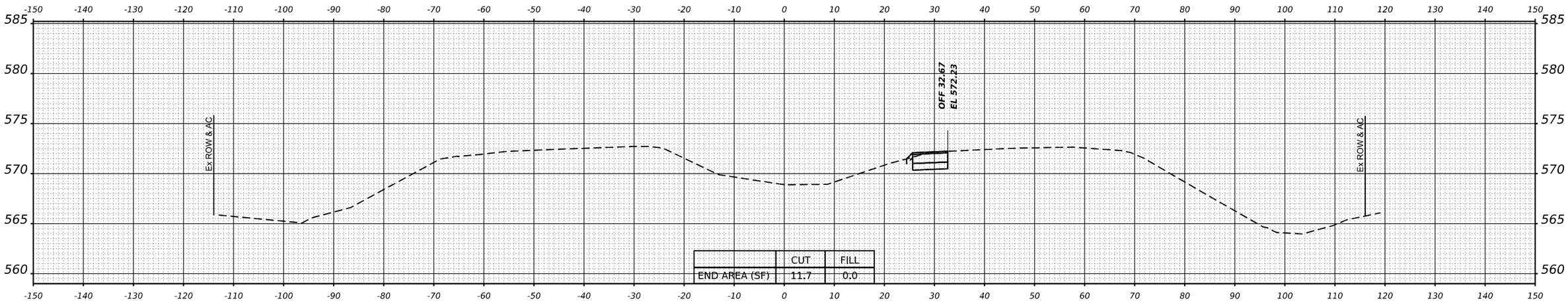

	CUT	FILL
END AREA (SF)	11.7	0.0

STA 407+00.00

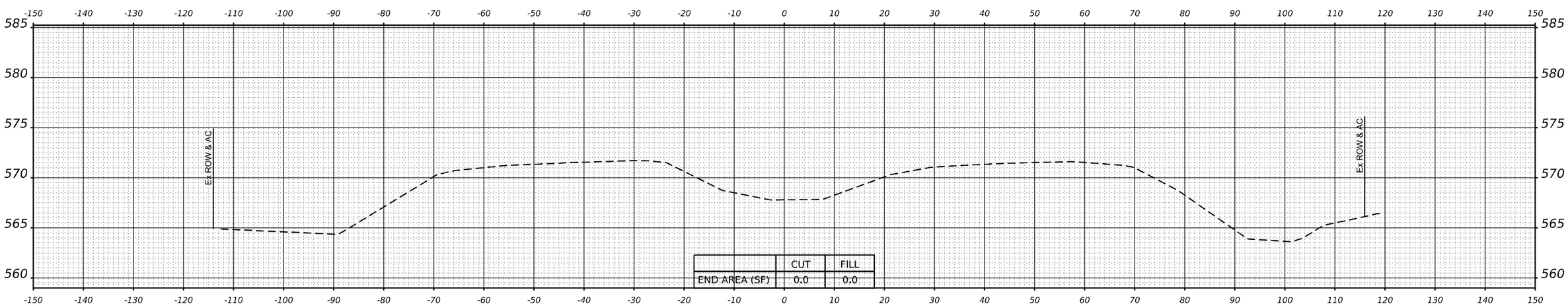

	CUT	FILL
END AREA (SF)	0.0	0.0

STA 406+00.00

FINAL SURVEY	BY	DATE
SURVEYED		
PLOTTED		
TEMPLATE		
AREAS		
AREAS CHECKED		
NOTE BOOK NO.		

ORIGINAL SURVEY	BY	DATE
SURVEYED		
PLOTTED		
TEMPLATE		
AREAS		
AREAS CHECKED		
NOTE BOOK NO.		

MODEL: BL_PR_I80_W = 406+00.00 [Sheet]
FILE NAME: pw://Transystems-pw.bentley.com:transyscorp-pw1-hosted/Documents/Projects_2018/CH401/401180022/02-TranSystems/CAD/03-3D/03-Container/PRE-STAGE/D1TSC-CONTAINER_PR_ROADWAY_PRE-STAGE-P1.dgn

TRANSYSTEMS

USER NAME = amkluver	DESIGNED - VLJ	REVISED -	
	DRAWN - MBM	REVISED -	
PLOT SCALE = 0.16666633 ' / in.	CHECKED - JMG	REVISED -	
PLOT DATE = 6/23/2023	DATE - 6/26/23	REVISED -	

STATE OF ILLINOIS
DEPARTMENT OF TRANSPORTATION

CROSS SECTIONS PRE–STAGE
I–80

SCALE: 10:H 5:V | SHEET 1 OF 43 SHEETS | STA. 406+00.00 407+00.00

F.A.I. RTE.	SECTION	COUNTY	TOTAL SHEETS	SHEET NO.
I-80	FAI 80 21 STRUCTURE 6	WILL	898	681
		CONTRACT NO. 62R25		
		ILLINOIS	FED. AID PROJECT	

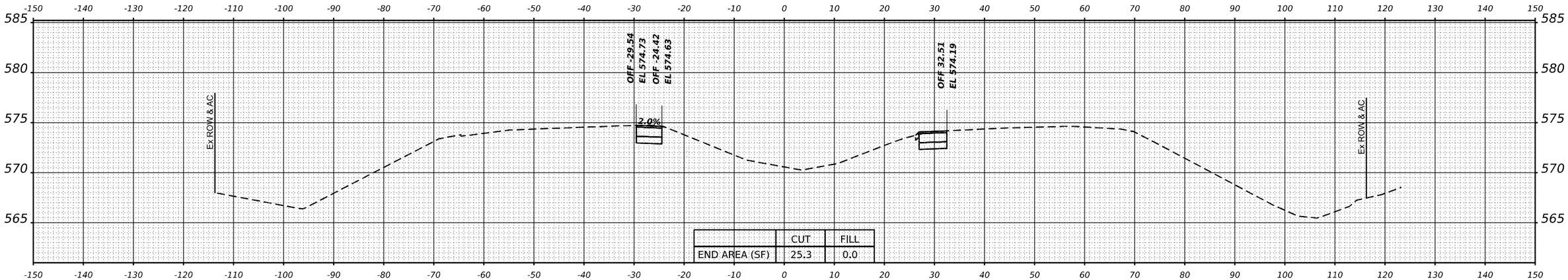

	CUT	FILL
END AREA (SF)	25.3	0.0

STA 409+00.00

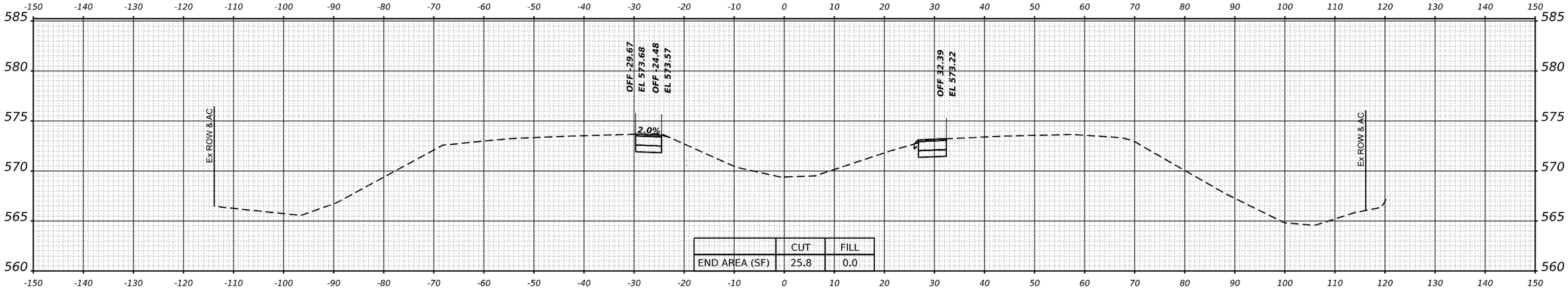

	CUT	FILL
END AREA (SF)	25.8	0.0

STA 408+00.00

FINAL SURVEY		BY	DATE
NOTE BOOK	SURVEYED		
	PLOTTED		
	TEMPLATE		
	AREAS		
NO.	AREAS CHECKED		

ORIGINAL SURVEY		BY	DATE
NOTE BOOK	SURVEYED		
	PLOTTED		
	TEMPLATE		
	AREAS		
NO.	AREAS CHECKED		

MODEL: BL_PR_I80_W - 408+00.00 [Sheet]
FILE NAME: pw://transystems-pw.bentley.com:transyscorp-pw1-hosted/Documents/Projects_2018/CH491/401180022/02-TranSystems/CAD/05-3D/02-Container/PRE-STAGE/D1TSC-CONTAINER_PR_ROADWAY_PRE-STAGE-P1.dgn

TRANSYSTEMS

USER NAME = amkluver	DESIGNED - VLJ	REVISED -	
	DRAWN - MBM	REVISED -	
PLOT SCALE = 0.16666633 ' / in.	CHECKED - JMG	REVISED -	
PLOT DATE = 6/23/2023	DATE - 6/26/23	REVISED -	

STATE OF ILLINOIS
DEPARTMENT OF TRANSPORTATION

CROSS SECTIONS PRE-STAGE
I-80

SCALE: 10:H 5:V | SHEET 2 OF 43 SHEETS | STA. 408+00.00 409+00.00

F.A.I. RTE.	SECTION	COUNTY	TOTAL SHEETS	SHEET NO.
I-80	FAI 80 21 STRUCTURE 6	WILL	898	682
		CONTRACT NO. 62R25		
		ILLINOIS	FED. AID PROJECT	

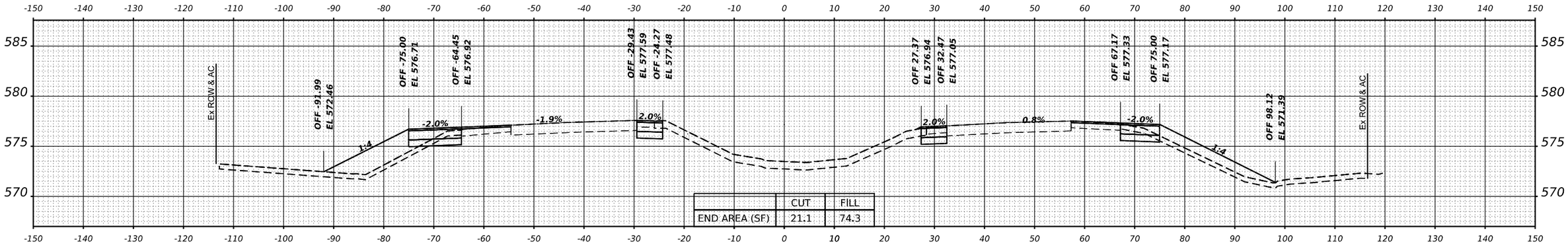

	CUT	FILL
END AREA (SF)	21.1	74.3

STA 412+00.00

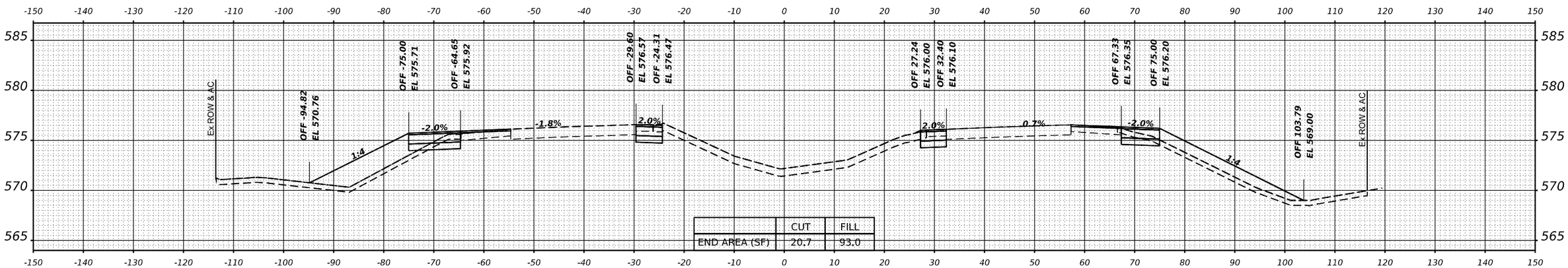

	CUT	FILL
END AREA (SF)	20.7	93.0

STA 411+00.00

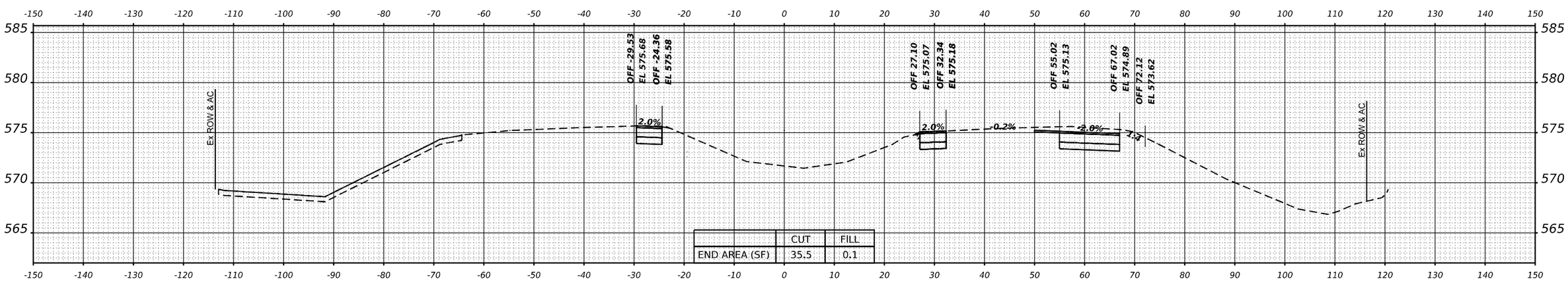

	CUT	FILL
END AREA (SF)	35.5	0.1

STA 410+00.00

FINAL SURVEY	BY	DATE
SURVEYED		
PLOTTED		
TEMPLATE		
AREAS		
AREAS CHECKED		
NOTE BOOK NO.		

ORIGINAL SURVEY	BY	DATE
SURVEYED		
PLOTTED		
TEMPLATE		
AREAS		
AREAS CHECKED		
NOTE BOOK NO.		

MODEL: BL_PR_I80_W - 410+00.00 [Sheet]
FILE NAME: pw://Transystems-pw.bentley.com:transyscorp-pw1-hosted/Documents/Projects_2018/CH401/401180022/02-TranSystems/CAD/03-3D/02-Container/PRE-STAGE/D1TSC-CONTAINER_PR_ROADWAY_PRE-STAGE-P1.dgn

TRANSYSTEMS

USER NAME = amkluver	DESIGNED - VLJ	REVISED -	
	DRAWN - MBM	REVISED -	
PLOT SCALE = 0.16666633 ' / in.	CHECKED - JMG	REVISED -	
PLOT DATE = 6/23/2023	DATE - 6/26/23	REVISED -	

STATE OF ILLINOIS
DEPARTMENT OF TRANSPORTATION

CROSS SECTIONS PRE-STAGE
I-80

SCALE: 10:H 5:V | SHEET 3 OF 43 SHEETS | STA. 410+00.00 412+00.00

F.A.I. RTE.	SECTION	COUNTY	TOTAL SHEETS	SHEET NO.
I-80	FAI 80 21 STRUCTURE 6	WILL	898	683
		CONTRACT NO. 62R25		
		ILLINOIS	FED. AID PROJECT	

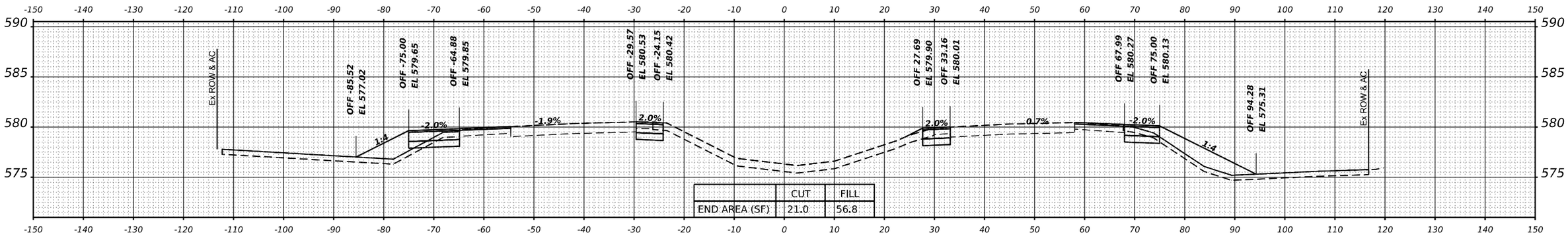

	CUT	FILL
END AREA (SF)	21.0	56.8

STA 415+00.00

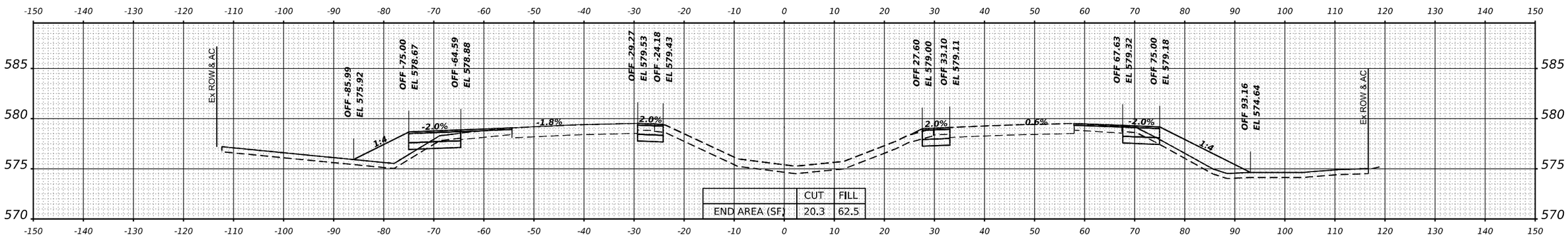

	CUT	FILL
END AREA (SF)	20.3	62.5

STA 414+00.00

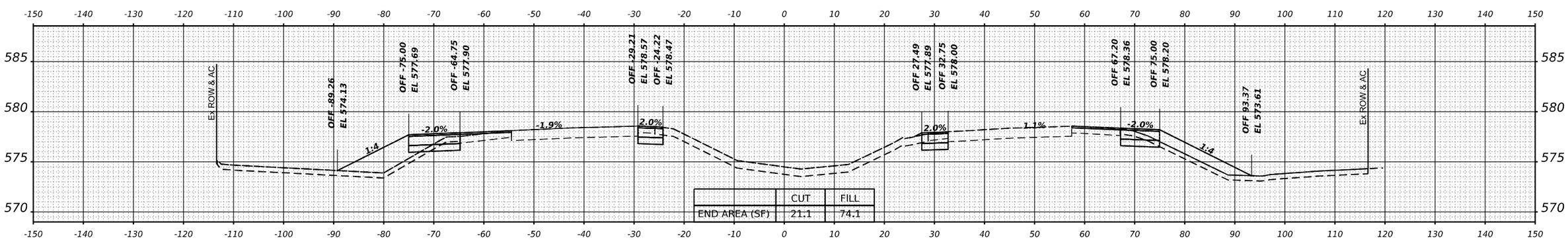

	CUT	FILL
END AREA (SF)	21.1	74.1

STA 413+00.00

FINAL SURVEY	BY	DATE
SURVEYED		
PLOTTED		
TEMPLATE		
AREAS		
AREAS CHECKED		
NOTE BOOK		
NO.		

ORIGINAL SURVEY	BY	DATE
SURVEYED		
PLOTTED		
TEMPLATE		
AREAS		
AREAS CHECKED		
NOTE BOOK		
NO.		

MODEL: BL_PR_I80_W - 413+00.00 [Sheet]
FILE NAME: pw://transystems-pw.bentley.com:transyscorp-pw1-hosted/Documents/Projects_2018/CH401/40118002/02-TrainSystems/CAD/05-3D/02-Container/PRE-STAGE/D1TSC-CONTAINER_PR_ROADWAY_PRE-STAGE-P1.dgn

TRANSYSTEMS

USER NAME = amkluver	DESIGNED - VLJ	REVISED -	
	DRAWN - MBM	REVISED -	
PLOT SCALE = 0.16666633 ' / in.	CHECKED - JMG	REVISED -	
PLOT DATE = 6/23/2023	DATE - 6/26/23	REVISED -	

STATE OF ILLINOIS
DEPARTMENT OF TRANSPORTATION

CROSS SECTIONS PRE-STAGE
I-80

SCALE: 10:H 5:V | SHEET 4 OF 43 SHEETS | STA. 413+00.00 — 415+00.00

F.A.I. RTE.	SECTION	COUNTY	TOTAL SHEETS	SHEET NO.
I-80	FAI 80 21 STRUCTURE 6	WILL	898	684

CONTRACT NO. 62R25

ILLINOIS | FED. AID PROJECT

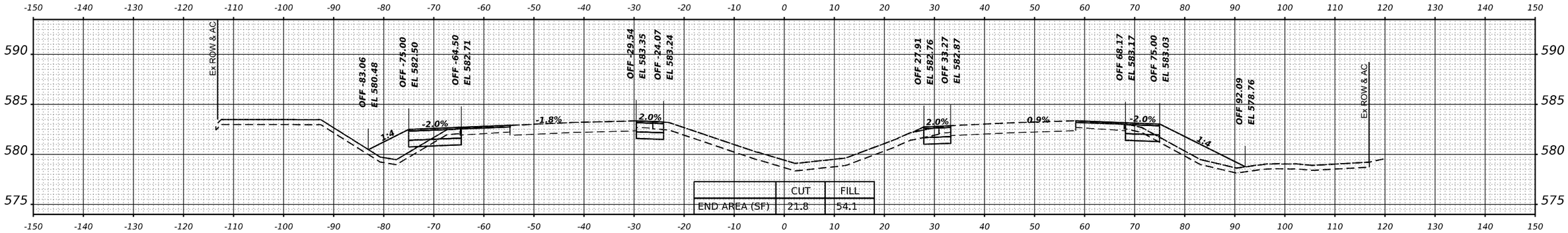

STA 418+00.00

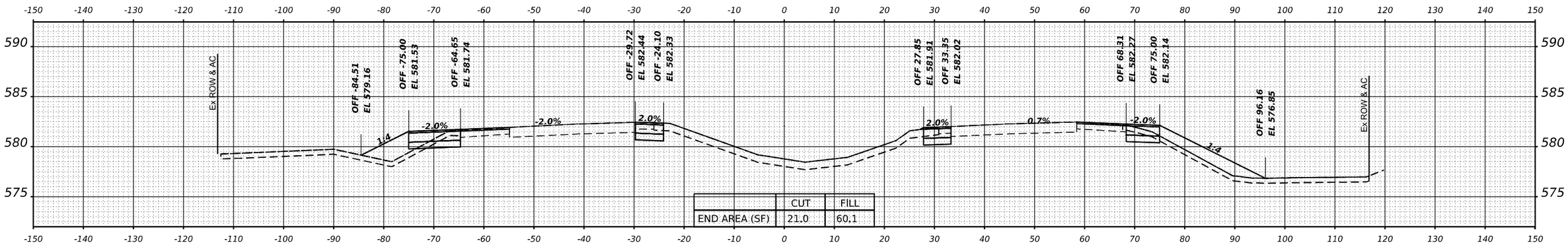

STA 417+00.00

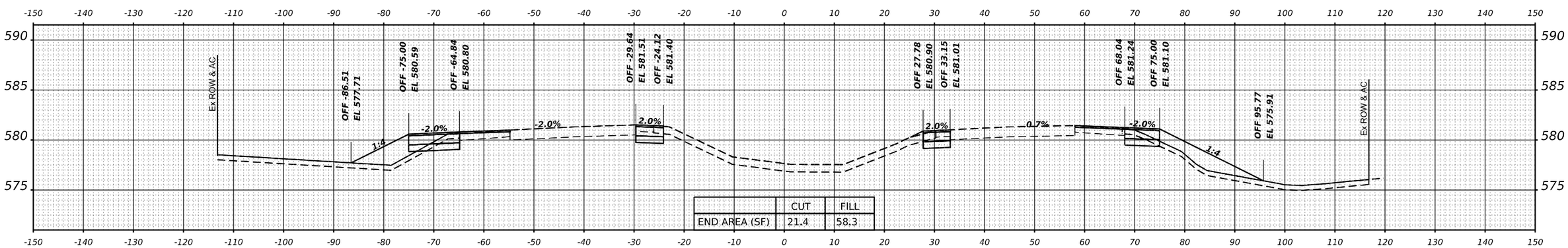

STA 416+00.00

FINAL SURVEY	BY	DATE
SURVEYED		
PLOTTED		
TEMPLATE		
AREAS		
AREAS CHECKED		
NOTE BOOK		
NO.		

ORIGINAL SURVEY	BY	DATE
SURVEYED		
PLOTTED		
TEMPLATE		
AREAS		
AREAS CHECKED		
NOTE BOOK		
NO.		

MODEL: BL_PR_I80_W - 416+00.00 [Sheet]
FILE NAME: pw://transystems-pw.bentley.com:transyscorp-pw1-hosted/Documents/Projects_2018/CH401/401180022/02-TranSystems/CAD/05-3D/02-Container/PRE-STAGE/01TSC-CONTAINER_PR_ROADWAY_PRE-STAGE-P1.dgn

TRANSYSTEMS

USER NAME = amkluver	DESIGNED - VLJ	REVISED -	
	DRAWN - MBM	REVISED -	
PLOT SCALE = 0.16666633 ' / in.	CHECKED - JMG	REVISED -	
PLOT DATE = 6/23/2023	DATE - 6/26/23	REVISED -	

STATE OF ILLINOIS
DEPARTMENT OF TRANSPORTATION

CROSS SECTIONS PRE-STAGE
I-80

SCALE: 10:H 5:V | SHEET 5 OF 43 SHEETS | STA. 416+00.00 418+00.00

F.A.I. RTE.	SECTION	COUNTY	TOTAL SHEETS	SHEET NO.
I-80	FAI 80 21 STRUCTURE 6	WILL	898	685

CONTRACT NO. 62R25

ILLINOIS | FED. AID PROJECT

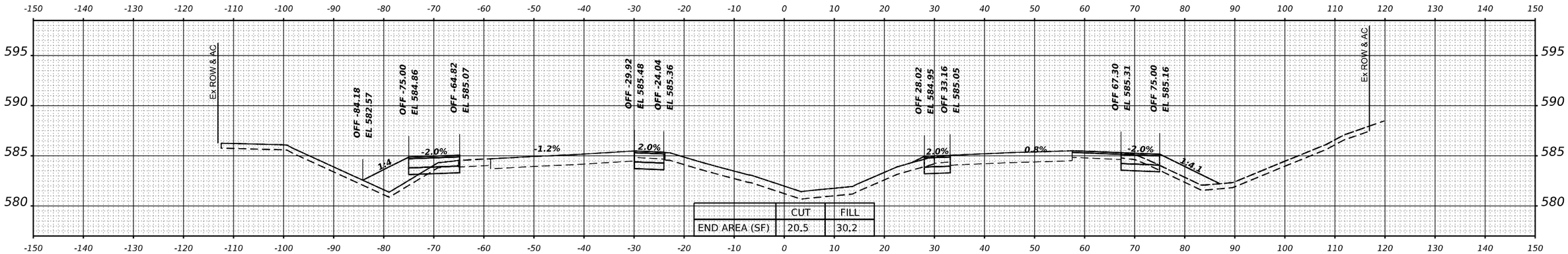

	CUT	FILL
END AREA (SF)	20.5	30.2

STA 421+00.00

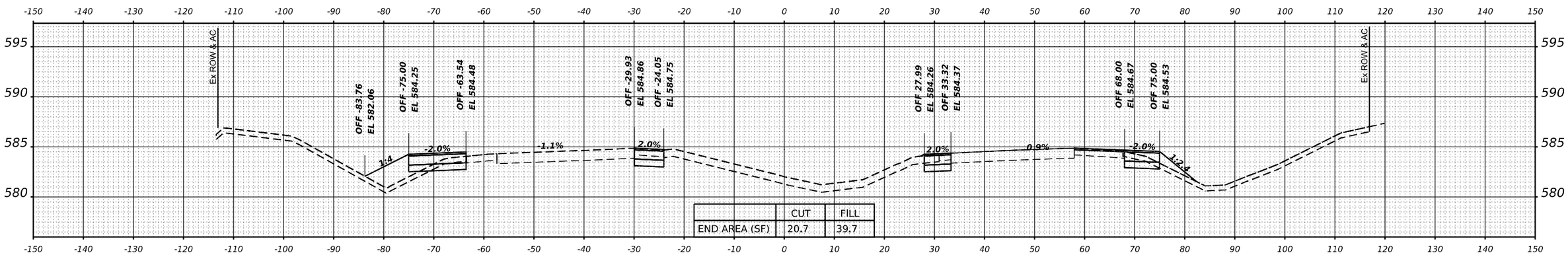

	CUT	FILL
END AREA (SF)	20.7	39.7

STA 420+00.00

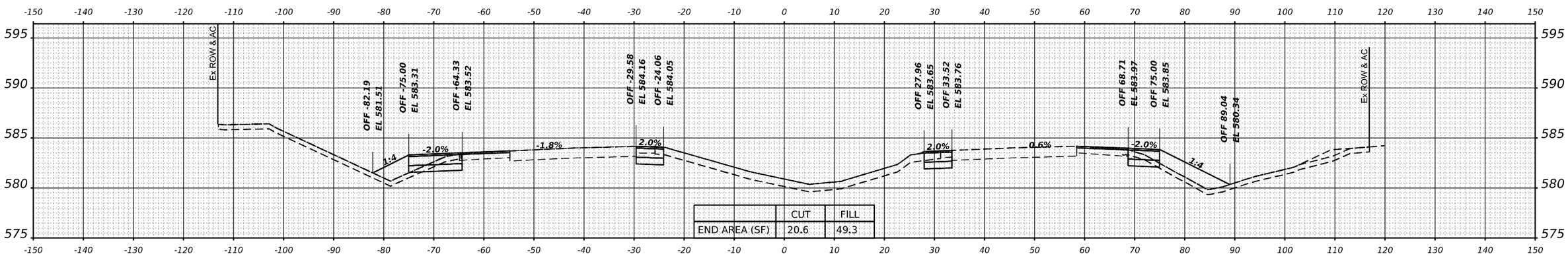

	CUT	FILL
END AREA (SF)	20.6	49.3

STA 419+00.00

FINAL SURVEY	BY	DATE
SURVEYED		
PLOTTED		
TEMPLATE		
AREAS		
AREAS CHECKED		
NOTE BOOK		
NO.		

ORIGINAL SURVEY	BY	DATE
SURVEYED		
PLOTTED		
TEMPLATE		
AREAS		
AREAS CHECKED		
NOTE BOOK		
NO.		

MODEL: BL_PR_I80_W - 419+00.00 [Sheet]
FILE NAME: pw://transystems-pw.bentley.com:transyscorp-eiw1-hosted/Documents/Projects_2018/CH401/401180022/02-TranSystems/CAD/05-3D/02-Container/PRE-STAGE/D1TSS-CONTAINER_PR_ROADWAY_PRE-STAGE-P1.dgn

TRANSYSTEMS

USER NAME = amkluver	DESIGNED - VLJ	REVISED -	
	DRAWN - MBM	REVISED -	
PLOT SCALE = 0.16666633 ' / in.	CHECKED - JMG	REVISED -	
PLOT DATE = 6/23/2023	DATE - 6/26/23	REVISED -	

STATE OF ILLINOIS
DEPARTMENT OF TRANSPORTATION

CROSS SECTIONS PRE–STAGE
I–80

SCALE: 10:H 5:V | SHEET 6 OF 43 SHEETS | STA. 419+00.00 421+00.00

F.A.I. RTE.	SECTION	COUNTY	TOTAL SHEETS	SHEET NO.
I-80	FAI 80 21 STRUCTURE 6	WILL	898	686

CONTRACT NO. 62R25

ILLINOIS | FED. AID PROJECT

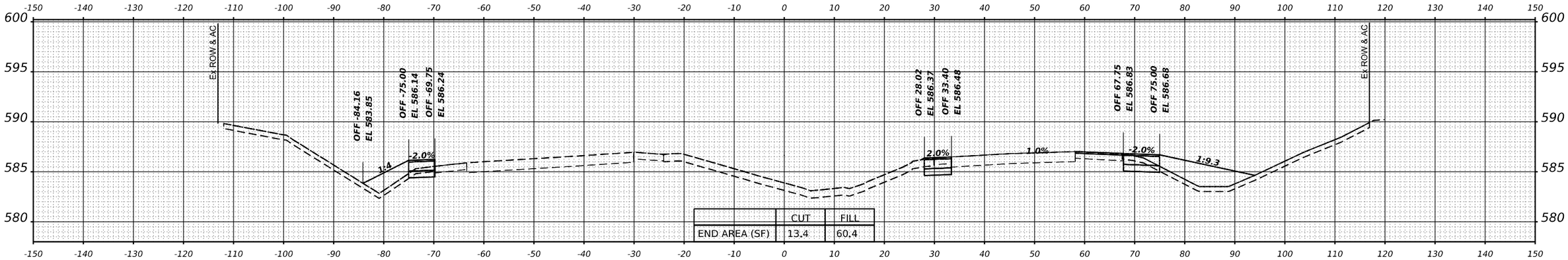

	CUT	FILL
END AREA (SF)	13.4	60.4

STA 424+00.00

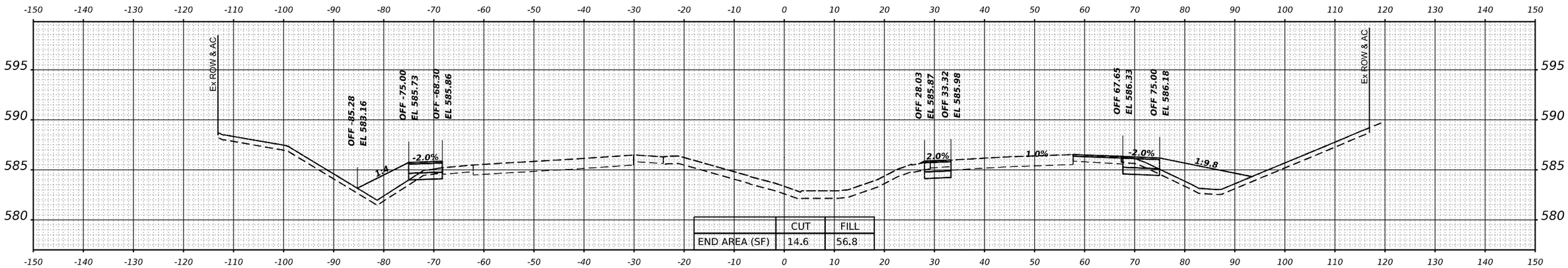

	CUT	FILL
END AREA (SF)	14.6	56.8

STA 423+00.00

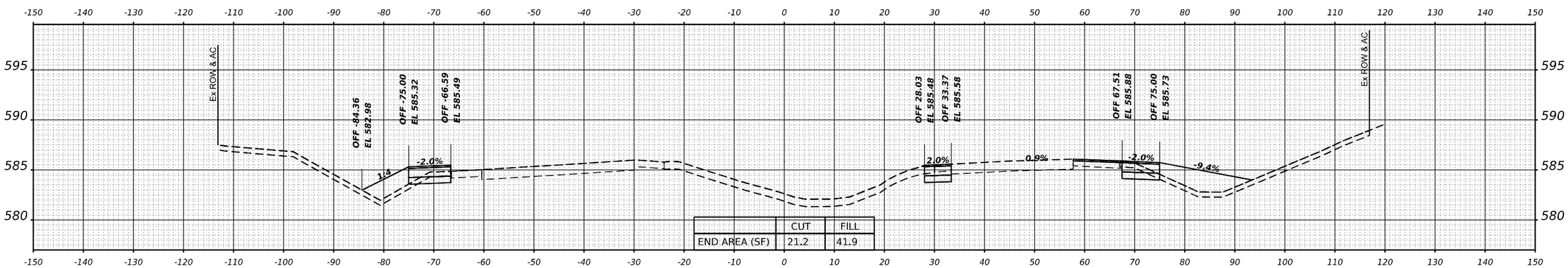

	CUT	FILL
END AREA (SF)	21.2	41.9

STA 422+00.00

FINAL SURVEY	BY	DATE
SURVEYED		
PLOTTED		
TEMPLATE		
AREAS		
AREAS CHECKED		
NOTE BOOK		
NO.		

ORIGINAL SURVEY	BY	DATE
SURVEYED		
PLOTTED		
TEMPLATE		
AREAS		
AREAS CHECKED		
NOTE BOOK		
NO.		

MODEL: BL_PR_I80_W - 422+00.00 [Sheet]
FILE NAME: pw://transystems-pw.bentley.com:transyscorp-pw1-hosted/Documents/Projects_2018/CH401/401180022/02-TranSystems/CAD/03-3D/02-Container/PRE-STAGE/D1TSC-CONTAINER_PR_ROADWAY_PRE-STAGE-P1.dgn

TRANSYSTEMS

USER NAME = amkluver	DESIGNED -	VLJ	REVISED -		
	DRAWN -	MBM	REVISED -		
PLOT SCALE = 0.16666633 ' / in.	CHECKED -	JMG	REVISED -		
PLOT DATE = 6/23/2023	DATE -	6/26/23	REVISED -		

STATE OF ILLINOIS
DEPARTMENT OF TRANSPORTATION

CROSS SECTIONS PRE-STAGE
I-80

SCALE: 10:H 5:V | SHEET 7 OF 43 SHEETS | STA. 422+00.00 424+00.00

F.A.I. RTE.	SECTION	COUNTY	TOTAL SHEETS	SHEET NO.
I-80	FAI 80 21 STRUCTURE 6	WILL	898	687
		CONTRACT NO. 62R25		
		ILLINOIS	FED. AID PROJECT	

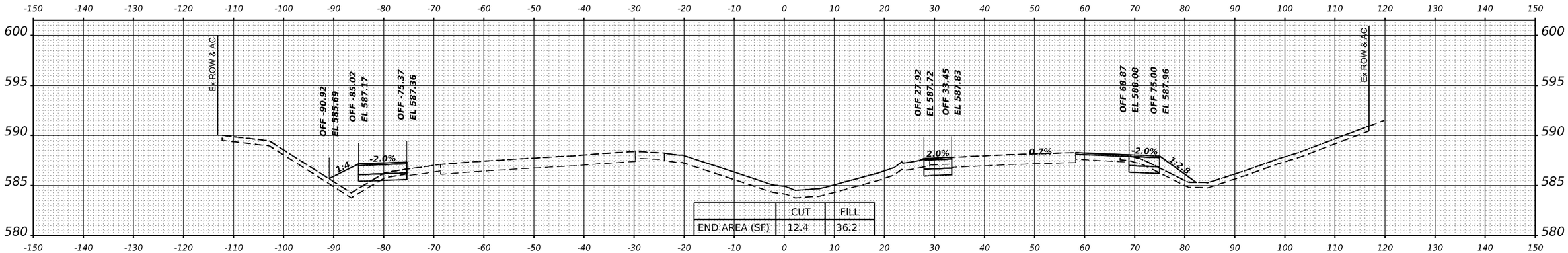

	CUT	FILL
END AREA (SF)	12.4	36.2

STA 427+00.00

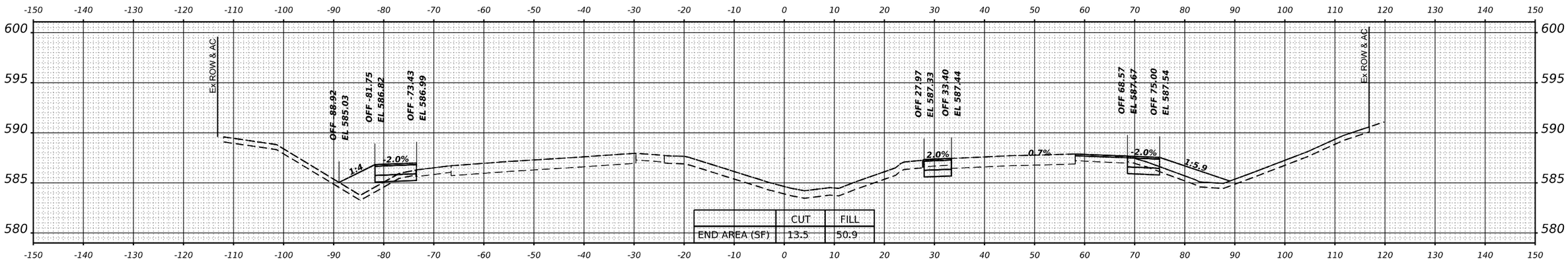

	CUT	FILL
END AREA (SF)	13.5	50.9

STA 426+00.00

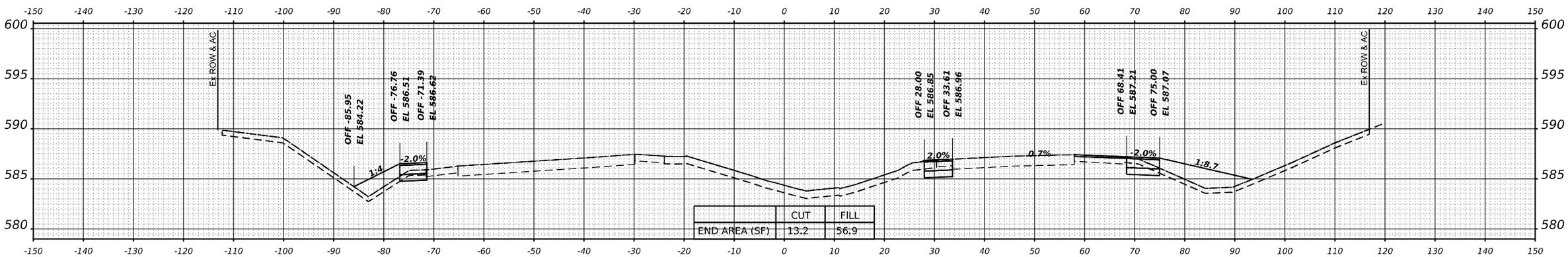

	CUT	FILL
END AREA (SF)	13.2	56.9

STA 425+00.00

FINAL SURVEY		BY	DATE
NOTE BOOK	SURVEYED		
	PLOTTED		
	TEMPLATE		
	AREAS		
NO.	AREAS CHECKED		

ORIGINAL SURVEY		BY	DATE
NOTE BOOK	SURVEYED		
	PLOTTED		
	TEMPLATE		
	AREAS		
NO.	AREAS CHECKED		

MODEL: BL_PR_I80_W - 425+00.00 [Sheet]
FILE NAME: pw://transystems-pw.bentley.com:transyscorp-pw1-hosted/Documents/Projects_2018/CH401/401180022/02-TranSystems/CAD/05-3D/02-Container/PRE-STAGE/D1TSC-CONTAINER_PR_ROADWAY_PRE-STAGE-P1.dgn

TRANSYSTEMS

USER NAME = amkluver	DESIGNED - VLJ	REVISED -	
	DRAWN - MBM	REVISED -	
PLOT SCALE = 0.16666633 ' / in.	CHECKED - JMG	REVISED -	
PLOT DATE = 6/23/2023	DATE - 6/26/23	REVISED -	

STATE OF ILLINOIS
DEPARTMENT OF TRANSPORTATION

CROSS SECTIONS PRE-STAGE
I-80

SCALE: 10:H 5:V | SHEET 8 OF 43 SHEETS | STA. 425+00.00 427+00.00

F.A.I. RTE.	SECTION	COUNTY	TOTAL SHEETS	SHEET NO.
I-80	FAI 80 21 STRUCTURE 6	WILL	898	688
		CONTRACT NO. 62R25		
		ILLINOIS	FED. AID PROJECT	

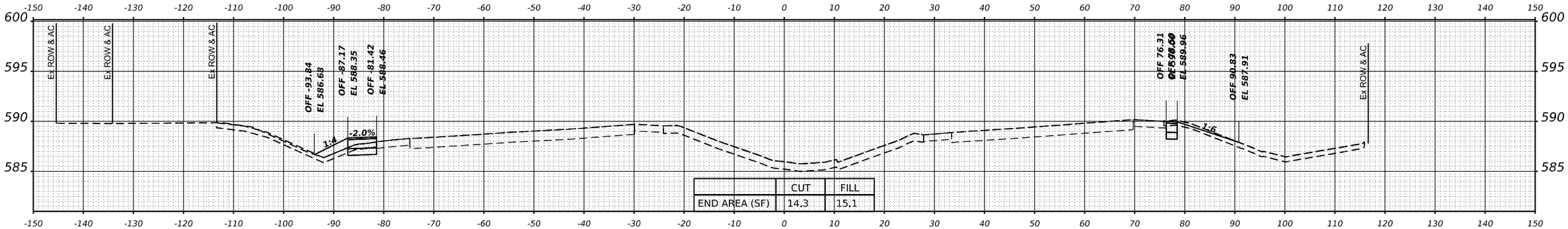

	CUT	FILL
END AREA (SF)	14.3	15.1

STA 430+00.00

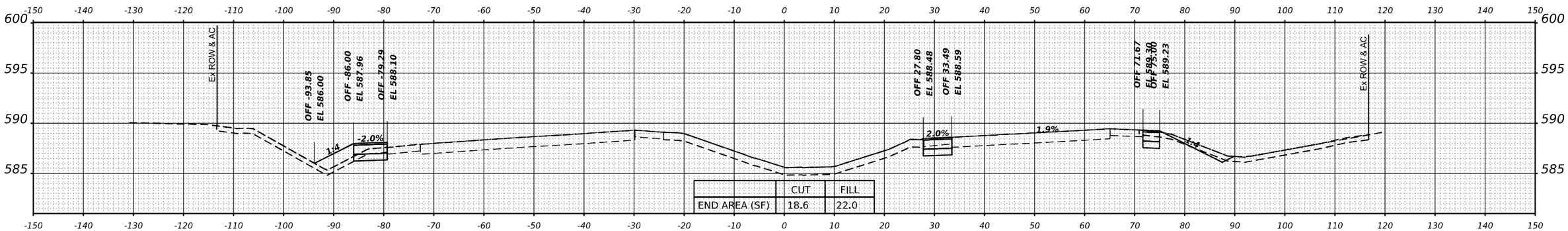

	CUT	FILL
END AREA (SF)	18.6	22.0

STA 429+00.00

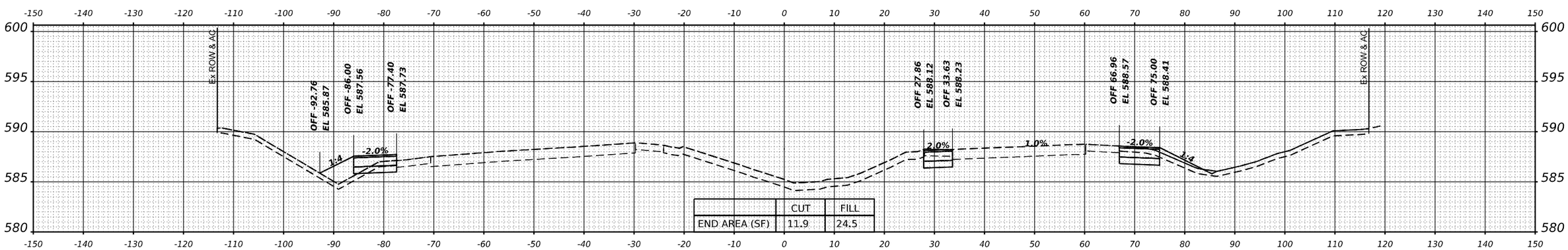

	CUT	FILL
END AREA (SF)	11.9	24.5

STA 428+00.00

FINAL SURVEY	BY	DATE
SURVEYED		
PLOTTED		
TEMPLATE		
AREAS		
AREAS CHECKED		
NOTE BOOK		
NO.		

ORIGINAL SURVEY	BY	DATE
SURVEYED		
PLOTTED		
TEMPLATE		
AREAS		
AREAS CHECKED		
NOTE BOOK		
NO.		

MODEL: BL_PR_I80_W = 428+00.00 [Sheet]
FILE NAME: pw://Transystems-pw.bentley.com:transyscorp-pw1-hosted/Documents/Projects_2018/CH401/401180022/02-TransSystems/CAD/03-3D/02-Container/PRE-STAGE/D1TSC-CONTAINER_PR_ROADWAY_PRE-STAGE-P1.dgn

TRANSYSTEMS

USER NAME = amkluver	DESIGNED - VLJ	REVISED -	
	DRAWN - MBM	REVISED -	
PLOT SCALE = 0.16666633 ' / in.	CHECKED - JMG	REVISED -	
PLOT DATE = 6/23/2023	DATE - 6/26/23	REVISED -	

STATE OF ILLINOIS
DEPARTMENT OF TRANSPORTATION

CROSS SECTIONS PRE–STAGE
I–80

SCALE: 10:H 5:V | SHEET 9 OF 43 SHEETS | STA. 428+00.00 430+00.00

F.A.I. RTE.	SECTION	COUNTY	TOTAL SHEETS	SHEET NO.
I-80	FAI 80 21 STRUCTURE 6	WILL	898	689
		CONTRACT NO. 62R25		
		ILLINOIS	FED. AID PROJECT	

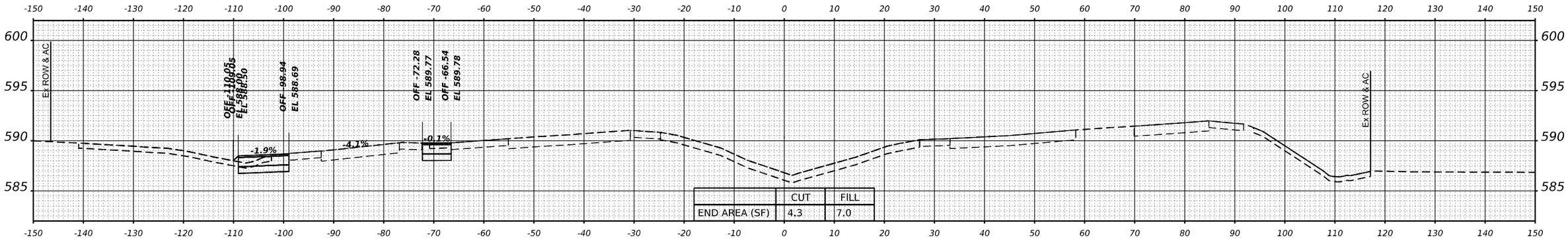

	CUT	FILL
END AREA (SF)	4.3	7.0

STA 433+00.00

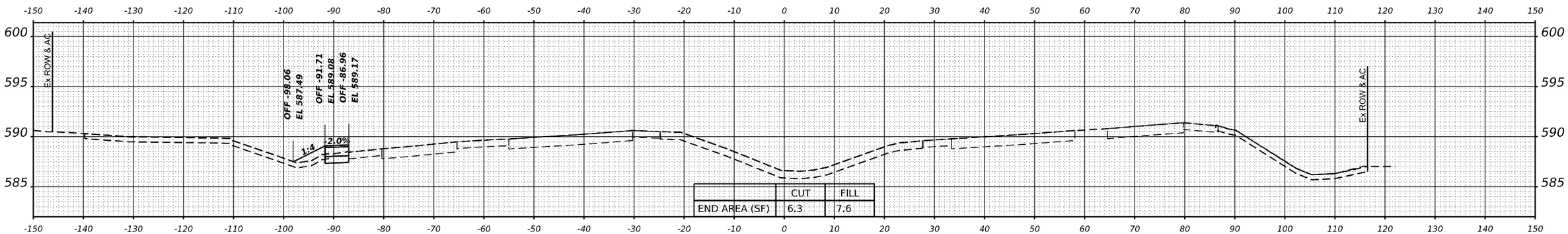

	CUT	FILL
END AREA (SF)	6.3	7.6

STA 432+00.00

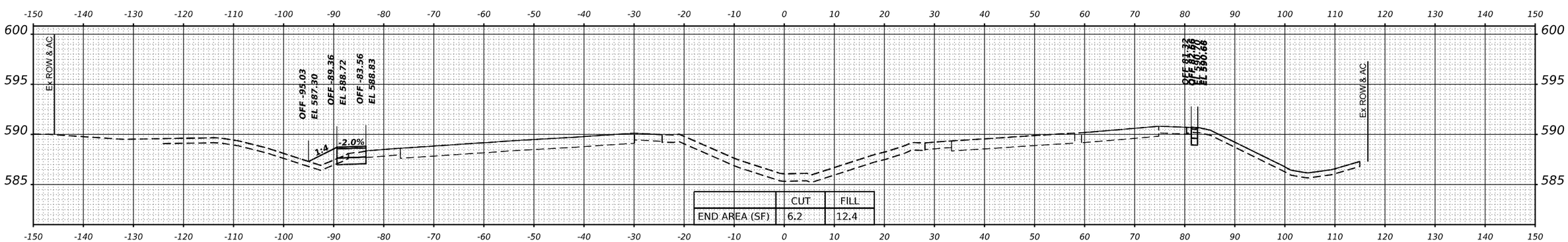

	CUT	FILL
END AREA (SF)	6.2	12.4

STA 431+00.00

FINAL SURVEY	BY	DATE
NOTE BOOK		
NO.		

SURVEYED
PLOTTED
TEMPLATE
AREAS
AREAS CHECKED

ORIGINAL SURVEY	BY	DATE
NOTE BOOK		
NO.		

SURVEYED
PLOTTED
TEMPLATE
AREAS
AREAS CHECKED

MODEL: BL_PR_I80_W - 431+00.00 [Sheet]
FILE NAME: pw://Transystems-pw.bentley.com:transyscorp-pw1-hosted/Documents/Projects_2018/CH401/401180022/02-TransSystems/CAD/03-3D/02-Container/PRE-STAGE/D1TSC-CONTAINER_PR_ROADWAY_PRESTAGE-P1.dgn

TRANSYSTEMS

USER NAME = amkluver	DESIGNED - VLJ	REVISED -	
	DRAWN - MBM	REVISED -	
PLOT SCALE = 0.16666633 ' / in.	CHECKED - JMG	REVISED -	
PLOT DATE = 6/23/2023	DATE - 6/26/23	REVISED -	

STATE OF ILLINOIS
DEPARTMENT OF TRANSPORTATION

CROSS SECTIONS PRE-STAGE
I-80

SCALE: 10:H 5:V | SHEET 10 OF 43 SHEETS | STA. 431+00.00 433+00.00

F.A.I. RTE.	SECTION	COUNTY	TOTAL SHEETS	SHEET NO.
I-80	FAI 80 21 STRUCTURE 6	WILL	898	690
		CONTRACT NO. 62R25		
		ILLINOIS	FED. AID PROJECT	

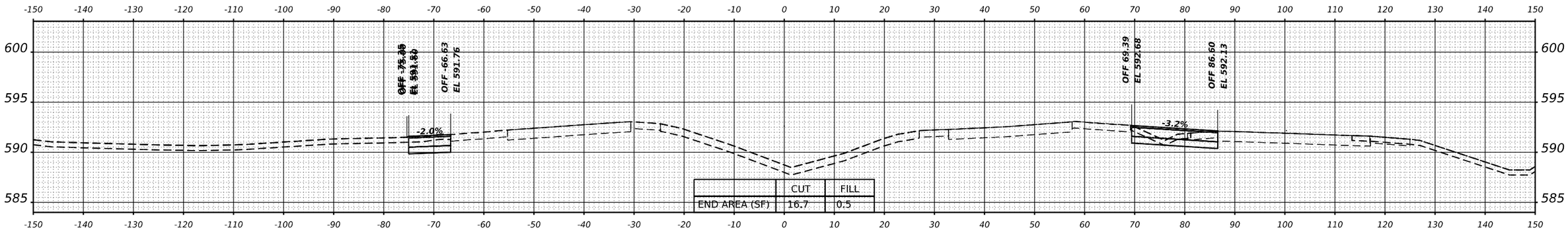

STA 436+00.00

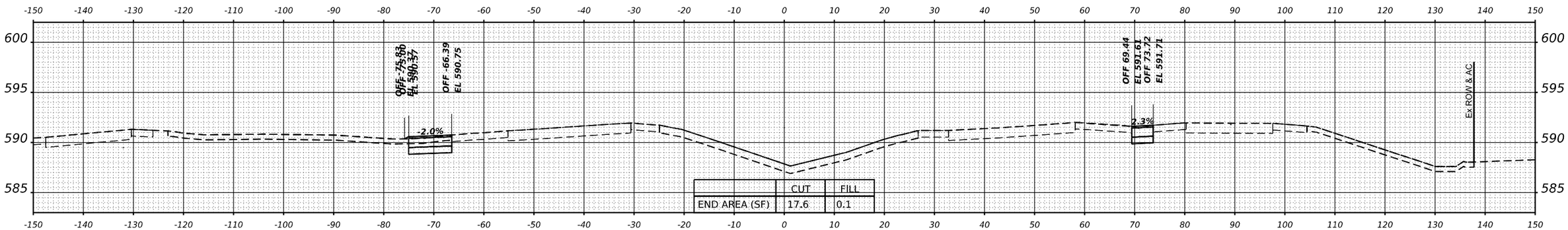

STA 435+00.00

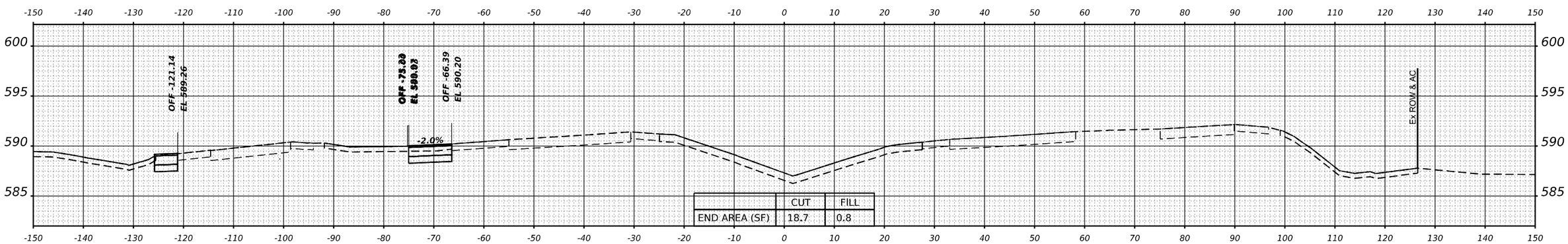

STA 434+00.00

FINAL SURVEY		BY	DATE
NOTE BOOK	SURVEYED		
	PLOTTED		
	TEMPLATE		
	AREAS		
NO.	AREAS CHECKED		

ORIGINAL SURVEY		BY	DATE
NOTE BOOK	SURVEYED		
	PLOTTED		
	TEMPLATE		
	AREAS		
NO.	AREAS CHECKED		

MODEL: BL_PR_I80_W-434+00.00 [Sheet]
FILE NAME: pw://transystems-pw.bentley.com:transyscorp-pw34-hosted/Documents/Projects_2018/CH401/401180022/02-TranSystems/CAD/05-3D/02-Container/PRE-STAGE/D1TSC-CONTAINER_PR_ROADWAY_PRE-STAGE-P1.dgn

TRANSYSTEMS

USER NAME = amkluver	DESIGNED - VLJ	REVISED -	
	DRAWN - MBM	REVISED -	
PLOT SCALE = 0.16666633 ' / in.	CHECKED - JMG	REVISED -	
PLOT DATE = 6/23/2023	DATE - 6/26/23	REVISED -	

STATE OF ILLINOIS
DEPARTMENT OF TRANSPORTATION

CROSS SECTIONS PRE-STAGE
I-80

SCALE: 10:H 5:V | SHEET 11 OF 43 SHEETS | STA. 434+00.00 436+00.00

F.A.I. RTE.	SECTION	COUNTY	TOTAL SHEETS	SHEET NO.
I-80	FAI 80 21 STRUCTURE 6	WILL	898	691
		CONTRACT NO. 62R25		
		ILLINOIS	FED. AID PROJECT	

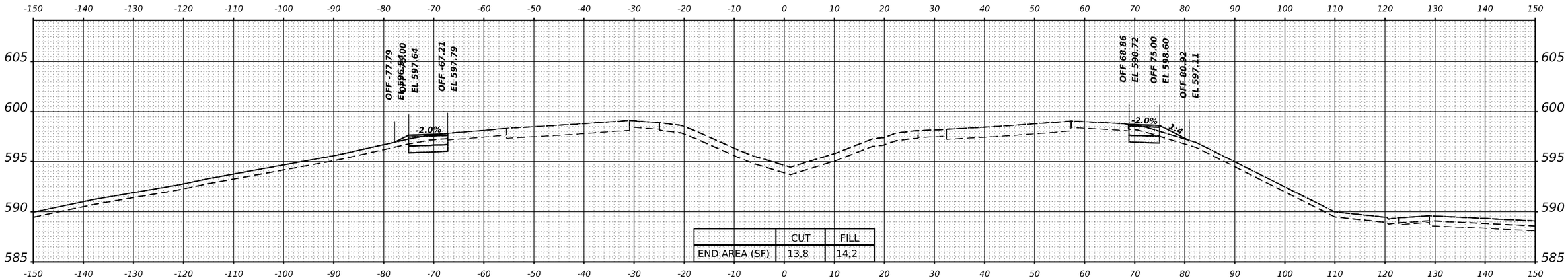

	CUT	FILL
END AREA (SF)	13.8	14.2

STA 439+00.00

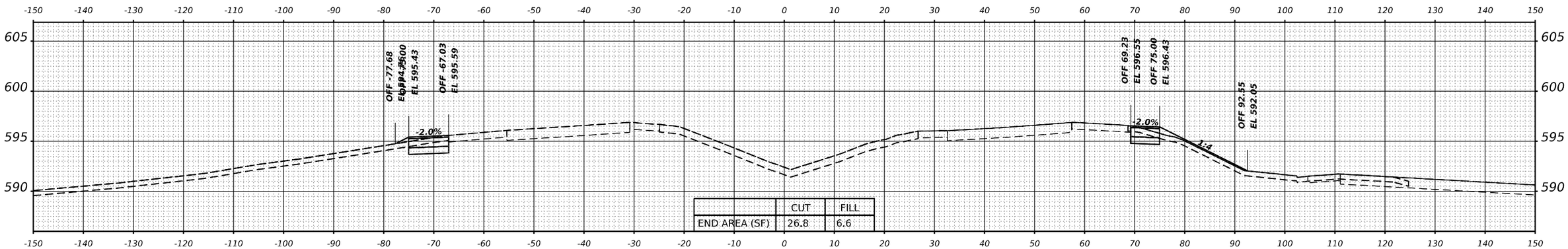

	CUT	FILL
END AREA (SF)	26.8	6.6

STA 438+00.00

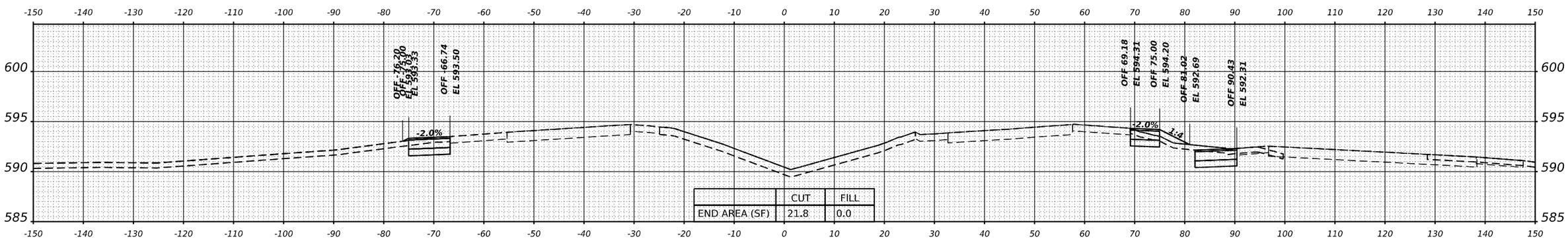

	CUT	FILL
END AREA (SF)	21.8	0.0

STA 437+00.00

FINAL SURVEY		BY	DATE
NOTE BOOK	SURVEYED		
NO.	PLOTTED		
	TEMPLATE		
	AREAS		
	AREAS CHECKED		

ORIGINAL SURVEY		BY	DATE
NOTE BOOK	SURVEYED		
NO.	PLOTTED		
	TEMPLATE		
	AREAS		
	AREAS CHECKED		

MODEL: BL_PR_I80_W-437+00.00 [Sheet]
FILE NAME: pw://transystemspw.bentley.com:transyscorp-pw1-hosted/Documents/Projects_2018/CH401/401180022/02-TrainSystems/CAD/05-3D/02-Container/PRE-STAGE/DITSC-CONTAINER_PR_ROADWAY_PRE-STAGE-P1.dgn

TRANSYSTEMS

USER NAME = amkluver	DESIGNED - VLJ	REVISED -	
	DRAWN - MBM	REVISED -	
PLOT SCALE = 0.16666633 ' / in.	CHECKED - JMG	REVISED -	
PLOT DATE = 6/23/2023	DATE - 6/26/23	REVISED -	

STATE OF ILLINOIS
DEPARTMENT OF TRANSPORTATION

CROSS SECTIONS PRE-STAGE
I-80

SCALE: 10:H 5:V | SHEET 12 OF 43 SHEETS | STA. 437+00.00 439+00.00

F.A.I. RTE.	SECTION	COUNTY	TOTAL SHEETS	SHEET NO.
I-80	FAI 80 21 STRUCTURE 6	WILL	898	692
		CONTRACT NO. 62R25		
		ILLINOIS	FED. AID PROJECT	

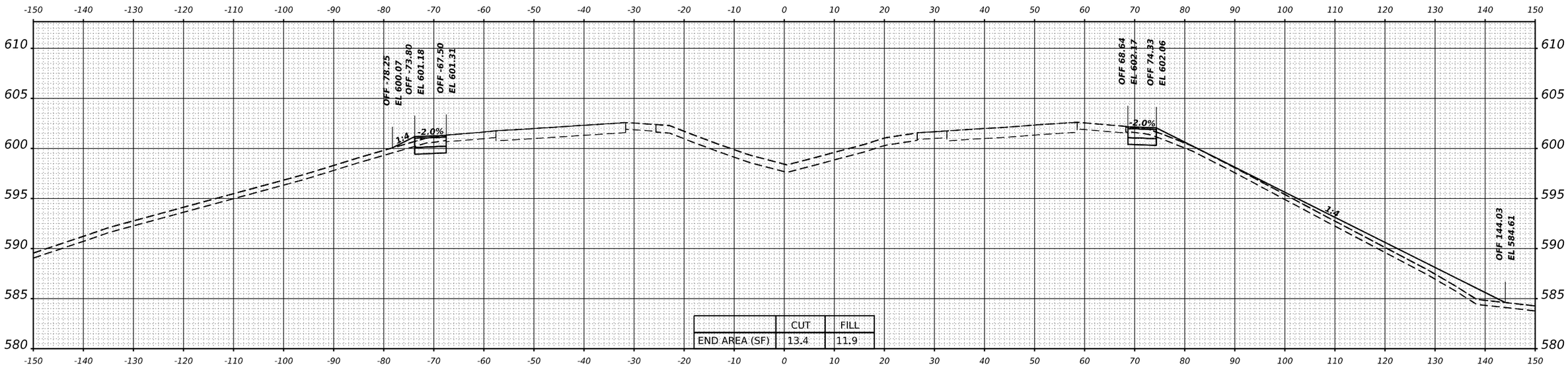

	CUT	FILL
END AREA (SF)	13.4	11.9

STA 441+00.00

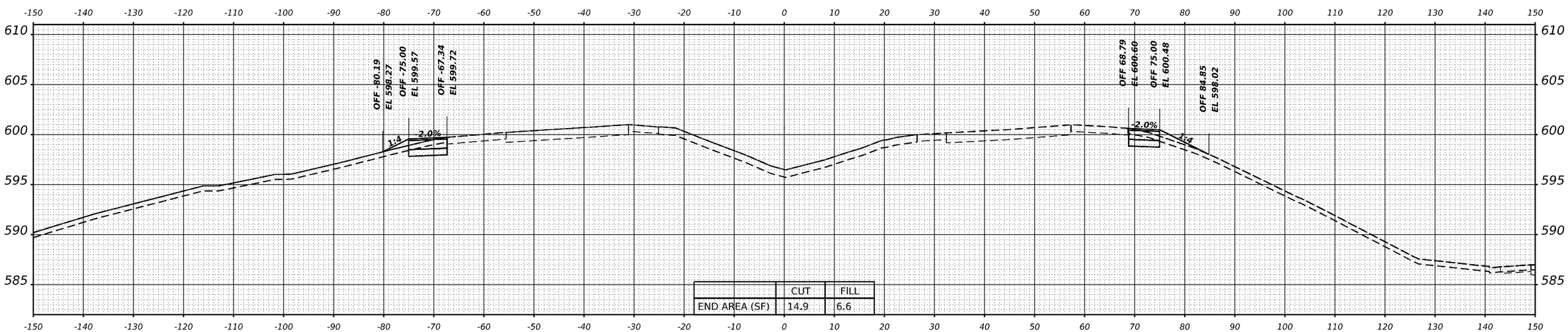

	CUT	FILL
END AREA (SF)	14.9	6.6

STA 440+00.00

FINAL SURVEY	BY	DATE
SURVEYED		
PLOTTED		
TEMPLATE		
AREAS		
AREAS CHECKED		
NOTE BOOK		
NO.		

ORIGINAL SURVEY	BY	DATE
SURVEYED		
PLOTTED		
TEMPLATE		
AREAS		
AREAS CHECKED		
NOTE BOOK		
NO.		

MODEL: BL_PR_I80_W - 440+00.00 [Sheet]
FILE NAME: pw://transystems-pw.bentley.com:transyscorp-pw1-hosted/Documents/Projects_2018/CH401/401180022/02-TranSystems/CAD/05-3D/02-Container/PRE-STAGE/D1TSC-CONTAINER_PR_ROADWAY_PRE-STAGE-P1.dgn

TRANSYSTEMS

USER NAME = amkluver	DESIGNED - VLJ	REVISED -	
	DRAWN - MBM	REVISED -	
PLOT SCALE = 0.16666633 ' / in.	CHECKED - JMG	REVISED -	
PLOT DATE = 6/23/2023	DATE - 6/26/23	REVISED -	

STATE OF ILLINOIS
DEPARTMENT OF TRANSPORTATION

CROSS SECTIONS PRE-STAGE
I-80

SCALE: 10:H 5:V | SHEET 13 OF 43 SHEETS | STA. 440+00.00 441+00.00

F.A.I. RTE.	SECTION	COUNTY	TOTAL SHEETS	SHEET NO.
I-80	FAI 80 21 STRUCTURE 6	WILL	898	693
		CONTRACT NO. 62R25		
	ILLINOIS	FED. AID PROJECT		

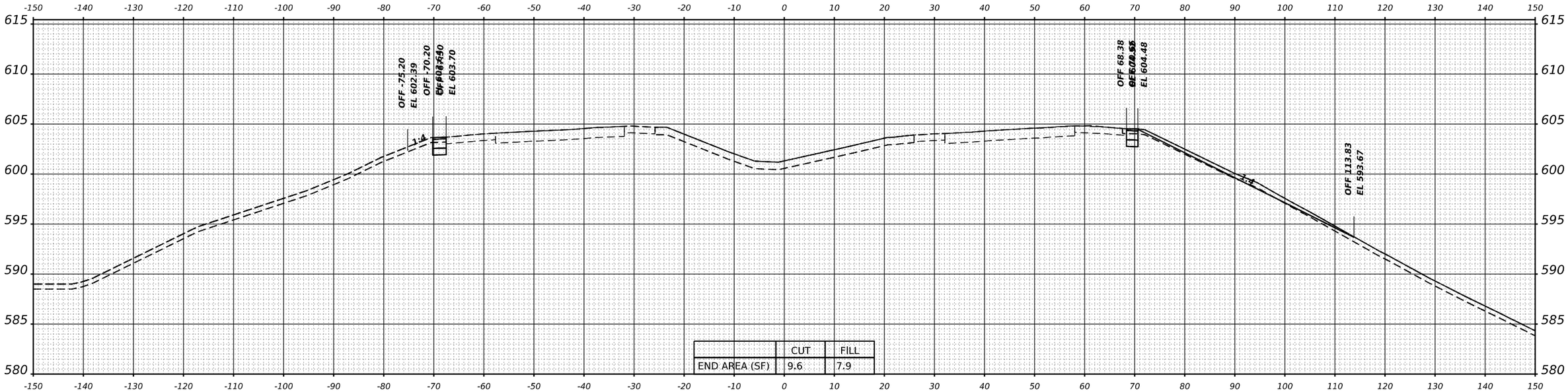

	CUT	FILL
END AREA (SF)	9.6	7.9

STA 443+00.00

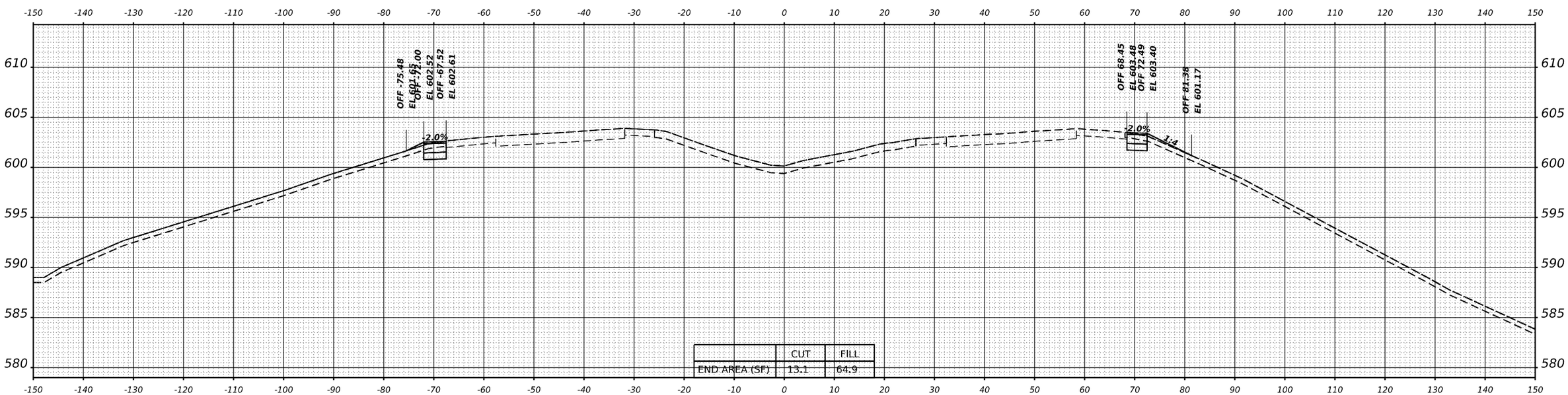

	CUT	FILL
END AREA (SF)	13.1	64.9

STA 442+00.00

FINAL SURVEY	BY	DATE
SURVEYED		
PLOTTED		
TEMPLATE		
AREAS		
AREAS CHECKED		
NOTE BOOK		
NO.		

ORIGINAL SURVEY	BY	DATE
SURVEYED		
PLOTTED		
TEMPLATE		
AREAS		
AREAS CHECKED		
NOTE BOOK		
NO.		

MODEL: BL_PR_I80_W - 442+00.00 [Sheet]
FILE NAME: pw://transystems-pw.bentley.com:transyscorp-pw14-hosted/Documents/Projects_2018/CH401/401180022/02-TranSystems/CAD/05-3D/02-Container/PRE-STAGE/D1TSC-CONTAINER_PR_ROADWAY_PRE-STAGE-P1.dgn

TRANSYSTEMS

USER NAME = amkluver	DESIGNED - VLJ	REVISED -	
	DRAWN - MBM	REVISED -	
PLOT SCALE = 0.16666633 ' / in.	CHECKED - JMG	REVISED -	
PLOT DATE = 6/23/2023	DATE - 6/26/23	REVISED -	

STATE OF ILLINOIS
DEPARTMENT OF TRANSPORTATION

CROSS SECTIONS PRE-STAGE
I-80

SCALE: 10:H 5:V | SHEET 14 OF 43 SHEETS | STA. 442+00.00 443+00.00

F.A.I. RTE.	SECTION	COUNTY	TOTAL SHEETS	SHEET NO.
I-80	FAI 80 21 STRUCTURE 6	WILL	898	694
		CONTRACT NO. 62R25		
		ILLINOIS	FED. AID PROJECT	

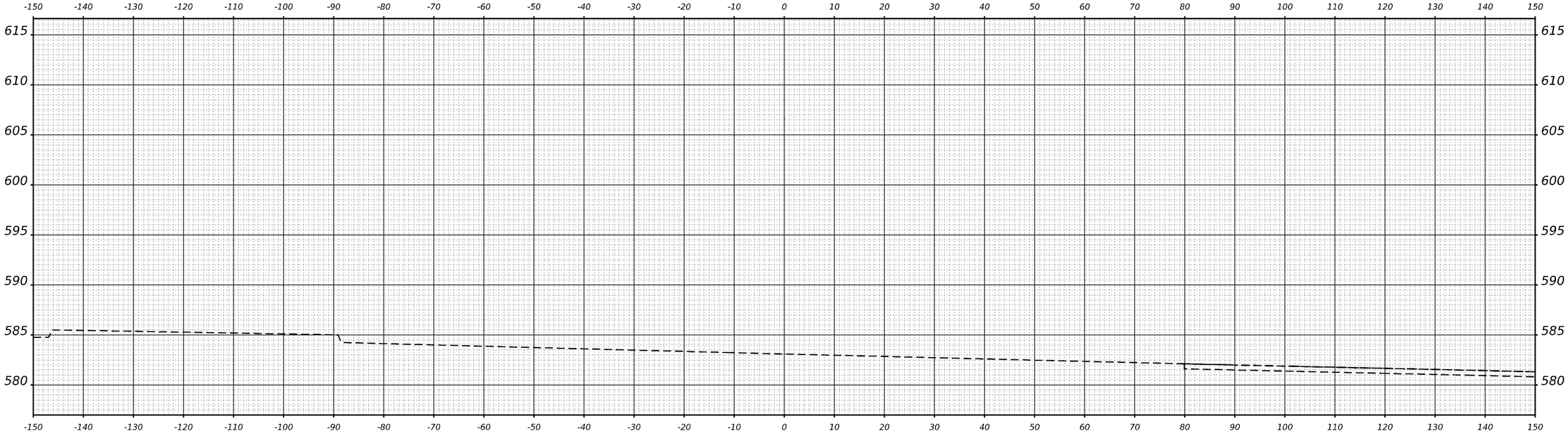

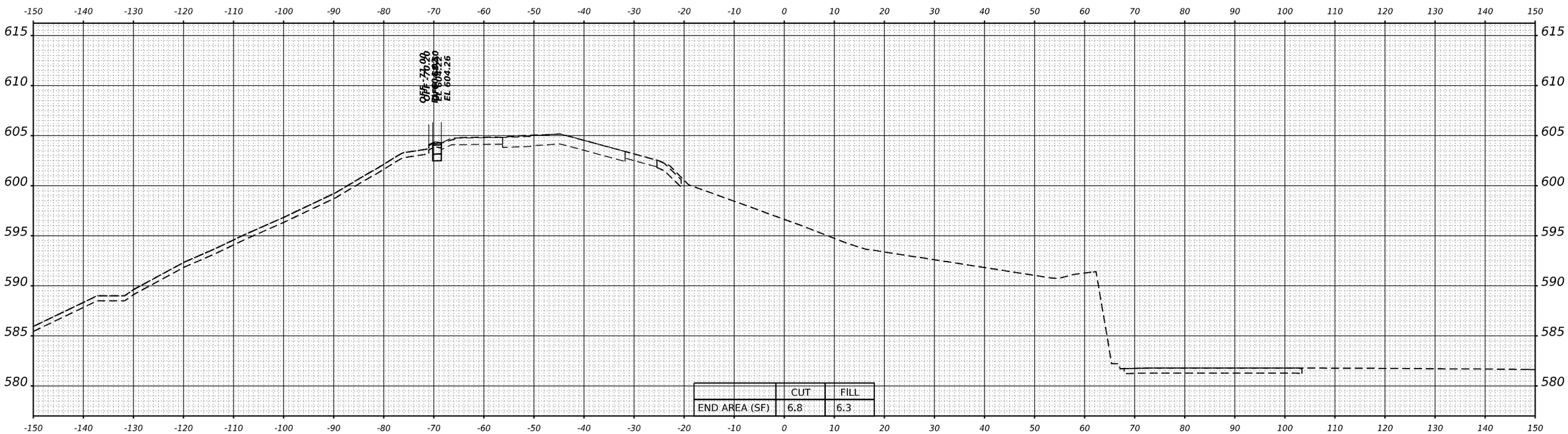

	CUT	FILL
END AREA (SF)	6.8	6.3

FINAL SURVEY	BY	DATE
NOTE BOOK		
NO.		
SURVEYED		
PLOTTED		
TEMPLATE		
AREAS		
AREAS CHECKED		

ORIGINAL SURVEY	BY	DATE
NOTE BOOK		
NO.		
SURVEYED		
PLOTTED		
TEMPLATE		
AREAS		
AREAS CHECKED		

MODEL: BL_PR_I80_W - 444+00.00 [Sheet]
FILE NAME: pw://transystems-pw.bentley.com:transyscorp-pw1-hosted/Documents/Projects_2018/CH491/401180022/02-TranSystems/CAD/05-3D/02-Container/PRE-STAGE/D1TSC-CONTAINER_PR_ROADWAY_PRE-STAGE-P1.dgn

TRANSYSTEMS

USER NAME = amkluver	DESIGNED - VLJ	REVISED -
	DRAWN - MBM	REVISED -
PLOT SCALE = 0.16666633 ' / in.	CHECKED - JMG	REVISED -
PLOT DATE = 6/23/2023	DATE - 6/26/23	REVISED -

STATE OF ILLINOIS
DEPARTMENT OF TRANSPORTATION

CROSS SECTIONS PRE–STAGE
I–80

SCALE: 10:H 5:V | SHEET 15 OF 43 SHEETS | STA. 444+00.00 445+00.00

F.A.I. RTE.	SECTION	COUNTY	TOTAL SHEETS	SHEET NO.
I-80	FAI 80 21 STRUCTURE 6	WILL	898	695
		CONTRACT NO. 62R25		
		ILLINOIS	FED. AID PROJECT	

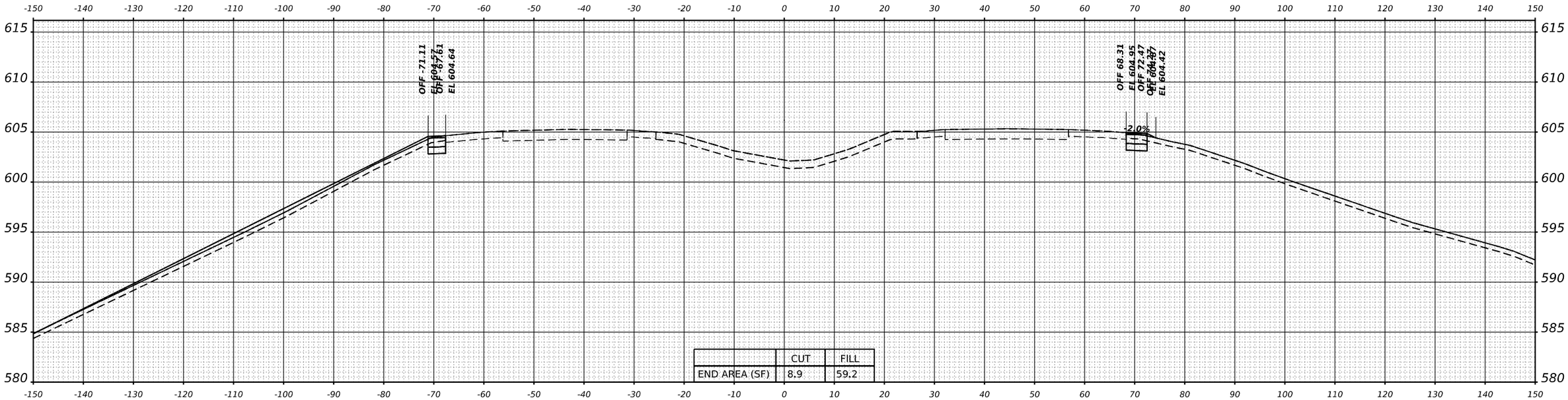

	CUT	FILL
END AREA (SF)	8.9	59.2

STA 447+00.00

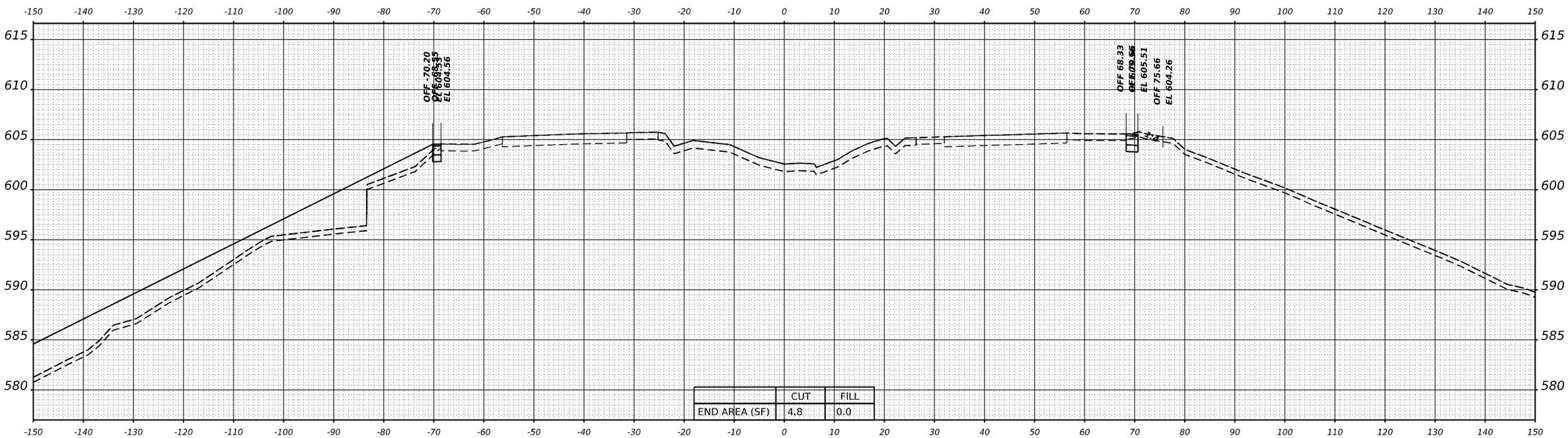

	CUT	FILL
END AREA (SF)	4.8	0.0

STA 446+00.00

FINAL SURVEY	BY	DATE
SURVEYED		
PLOTTED		
TEMPLATE		
AREAS		
AREAS CHECKED		
NOTE BOOK		
NO.		

ORIGINAL SURVEY	BY	DATE
SURVEYED		
PLOTTED		
TEMPLATE		
AREAS		
AREAS CHECKED		
NOTE BOOK		
NO.		

MODEL: BL_PR_I80_W - 446+00.00 [Sheet]
FILE NAME: pw://transystems-pw.bentley.com:transyscorp-pw1-hosted/Documents/Projects_2018/CH491/401180022/02-TranSystems/CAD/05-3D/02-Container/PRE-STAGE/D1TSC-CONTAINER_PR_ROADWAY_PRE-STAGE-P1.dgn

TRANSYSTEMS

USER NAME = amkluver	DESIGNED - VLJ	REVISED -
	DRAWN - MBM	REVISED -
PLOT SCALE = 0.16666633 ' / in.	CHECKED - JMG	REVISED -
PLOT DATE = 6/23/2023	DATE - 6/26/23	REVISED -

STATE OF ILLINOIS
DEPARTMENT OF TRANSPORTATION

CROSS SECTIONS PRE-STAGE
I-80

SCALE: 10:H 5:V | SHEET 16 OF 43 SHEETS | STA. 446+00.00 447+00.00

F.A.I. RTE.	SECTION	COUNTY	TOTAL SHEETS	SHEET NO.
I-80	FAI 80 21 STRUCTURE 6	WILL	898	696
		CONTRACT NO. 62R25		
		ILLINOIS	FED. AID PROJECT	

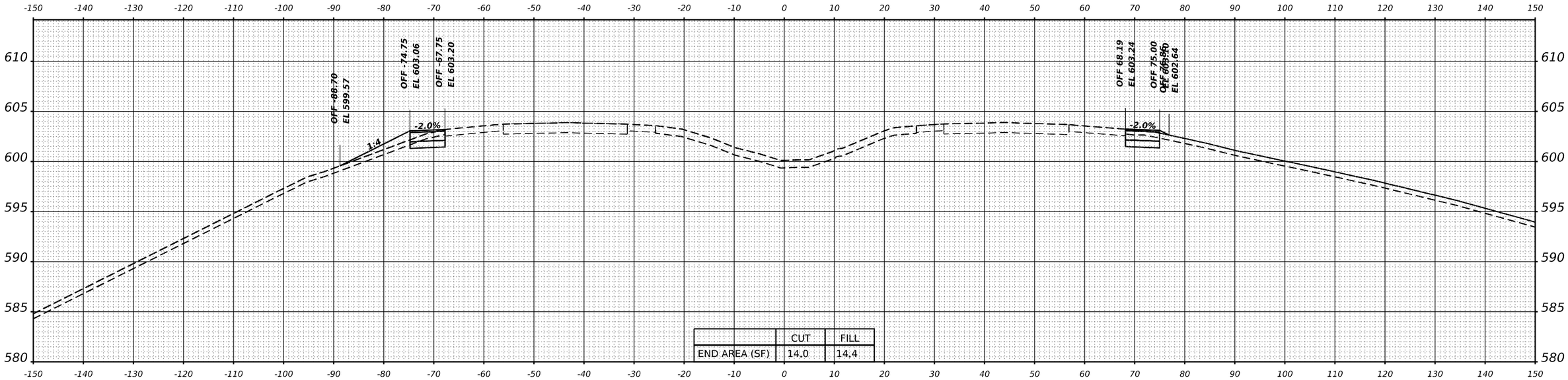

	CUT	FILL
END AREA (SF)	14.0	14.4

STA 449+00.00

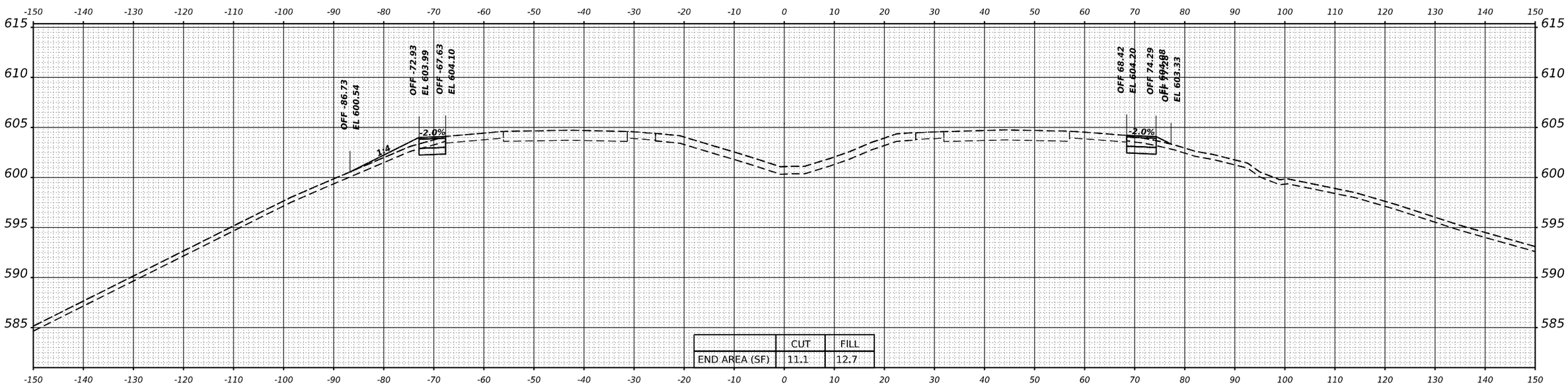

	CUT	FILL
END AREA (SF)	11.1	12.7

STA 448+00.00

FINAL SURVEY		BY	DATE
NOTE BOOK	SURVEYED		
	PLOTTED		
	TEMPLATE		
	AREAS		
NO.	AREAS CHECKED		

ORIGINAL SURVEY		BY	DATE
NOTE BOOK	SURVEYED		
	PLOTTED		
	TEMPLATE		
	AREAS		
NO.	AREAS CHECKED		

MODEL: BL_PR_890_W - 448+00.00 [Sheet]
FILE NAME: pw://transystems-pw.bentley.com:transyscorp-pw14-hosted/Documents/Projects_2018/CH401/401180022/02-TranSystems/CAD/05-3D/02-Container/PRE-STAGE/D1TSC-CONTAINER_PR_ROADWAY_PRE-STAGE-P1.dgn

TRANSYSTEMS

USER NAME = amkluver	DESIGNED - VLJ	REVISED -	
	DRAWN - MBM	REVISED -	
PLOT SCALE = 0.16666633 ' / in.	CHECKED - JMG	REVISED -	
PLOT DATE = 6/23/2023	DATE - 6/26/23	REVISED -	

STATE OF ILLINOIS
DEPARTMENT OF TRANSPORTATION

CROSS SECTIONS PRE-STAGE
I-80

SCALE: 10:H 5:V | SHEET 17 OF 43 SHEETS | STA. 448+00.00 449+00.00

F.A.I. RTE.	SECTION	COUNTY	TOTAL SHEETS	SHEET NO.
I-80	FAI 80 21 STRUCTURE 6	WILL	898	697

CONTRACT NO. 62R25

ILLINOIS | FED. AID PROJECT

FINAL SURVEY		BY	DATE
NOTE BOOK	SURVEYED		
	PLOTTED		
	TEMPLATE		
	AREAS		
NO.	AREAS CHECKED		

ORIGINAL SURVEY		BY	DATE
NOTE BOOK	SURVEYED		
	PLOTTED		
	TEMPLATE		
	AREAS		
NO.	AREAS CHECKED		

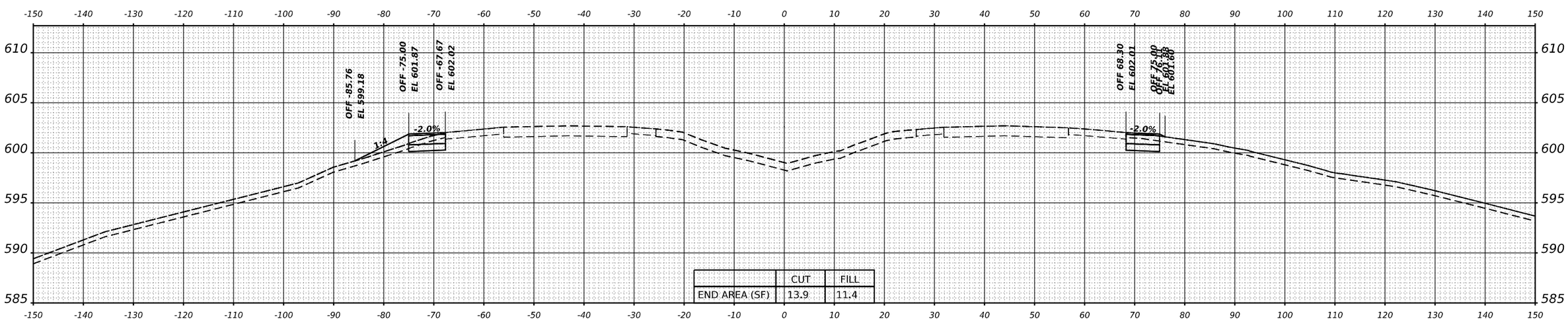

	CUT	FILL
END AREA (SF)	13.9	11.4

STA 450+00.00

MODEL: BL_PR_I80_W - 450+00.00 [Sheet]
FILE NAME: pw://transystems-pw.bentley.com:transyscorp-pw1-hosted/Documents/Projects_2018/CH401/401180022/02-TranSystems/CAD/05-3D/02-Container/PRE-STAGE/D1TSC-CONTAINER_PR_ROADWAY_PRE-STAGE-P1.dgn

TRANSYSTEMS

USER NAME = amkluver	DESIGNED - VLJ	REVISED -
	DRAWN - MBM	REVISED -
PLOT SCALE = 0.16666633 ' / in.	CHECKED - JMG	REVISED -
PLOT DATE = 6/23/2023	DATE - 6/26/23	REVISED -

STATE OF ILLINOIS
DEPARTMENT OF TRANSPORTATION

CROSS SECTIONS PRE-STAGE
I-80

SCALE: 10:H 5:V | SHEET 18 OF 43 SHEETS | STA. 450+00.00

F.A.I. RTE.	SECTION	COUNTY	TOTAL SHEETS	SHEET NO.
I-80	FAI 80 21 STRUCTURE 6	WILL	898	698
		CONTRACT NO. 62R25		
	ILLINOIS	FED. AID PROJECT		

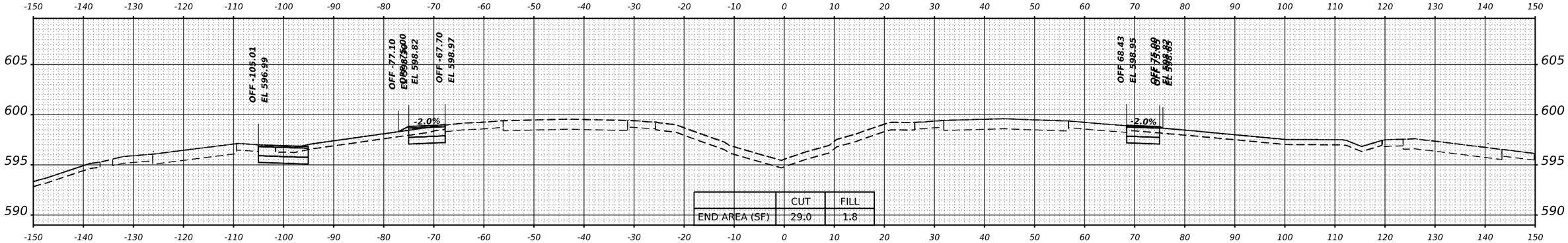

	CUT	FILL
END AREA (SF)	29.0	1.8

STA 453+00.00

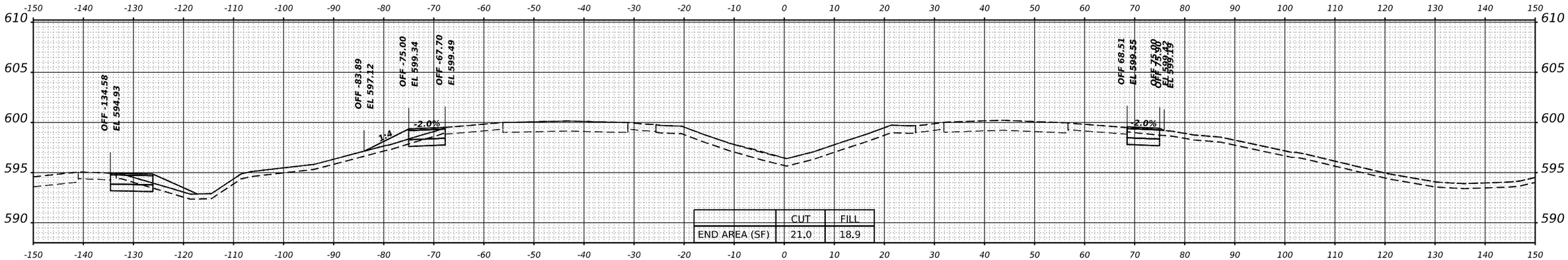

	CUT	FILL
END AREA (SF)	21.0	18.9

STA 452+00.00

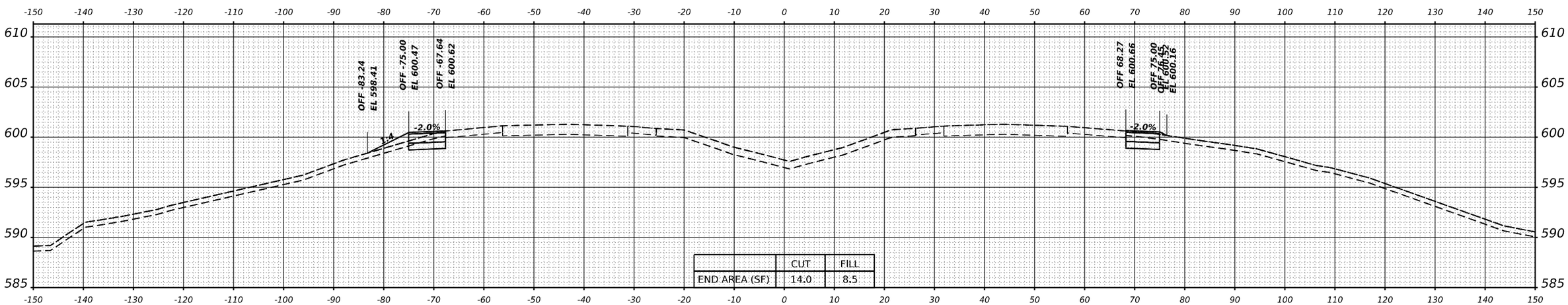

	CUT	FILL
END AREA (SF)	14.0	8.5

STA 451+00.00

FINAL SURVEY	BY	DATE
SURVEYED		
PLOTTED		
TEMPLATE		
AREAS		
AREAS CHECKED		
NOTE BOOK		
NO.		

ORIGINAL SURVEY	BY	DATE
SURVEYED		
PLOTTED		
TEMPLATE		
AREAS		
AREAS CHECKED		
NOTE BOOK		
NO.		

MODEL: BL_PR_I80_W - 451+00.00 [Sheet]
FILE NAME: pw://transystems-pw.bentley.com:transyscomp-pw1-hosted/Documents/Projects_2018/CH401/401180022/02-TranSystems/CAD/05-3D/02-Container/PRE-STAGE/01TSC-CONTAINER_PR_ROADWAY_PRE-STAGE-P2.dgn

TRANSYSTEMS

USER NAME = amkluver	DESIGNED - VLJ	REVISED -
	DRAWN - MBM	REVISED -
PLOT SCALE = 0.16666633 ' / in.	CHECKED - JMG	REVISED -
PLOT DATE = 6/23/2023	DATE - 6/26/23	REVISED -

STATE OF ILLINOIS
DEPARTMENT OF TRANSPORTATION

CROSS SECTIONS PRE-STAGE
I-80

SCALE: 10:H 5:V | SHEET 19 OF 43 SHEETS | STA. 451+00.00 453+00.00

F.A.I. RTE.	SECTION	COUNTY	TOTAL SHEETS	SHEET NO.
I-80	FAI 80 21 STRUCTURE 6	WILL	898	699
		CONTRACT NO. 62R25		
		ILLINOIS	FED. AID PROJECT	

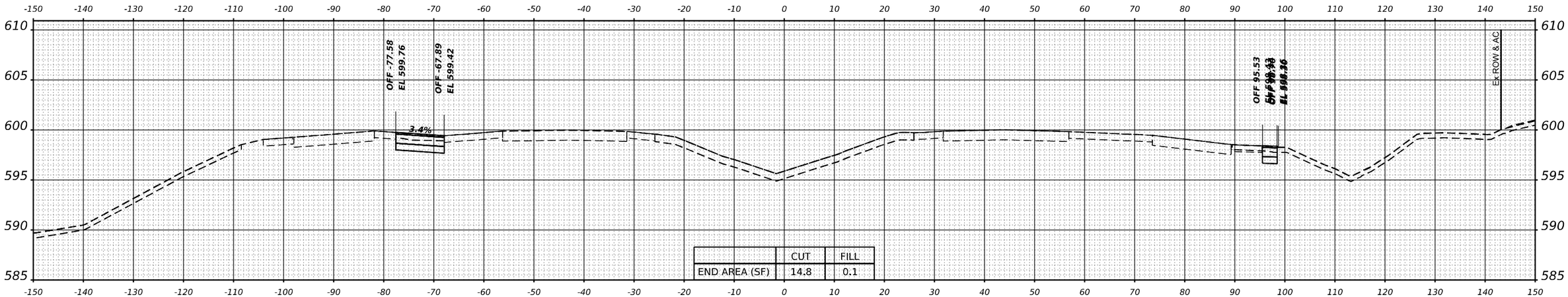

	CUT	FILL
END AREA (SF)	14.8	0.1

STA 455+00.00

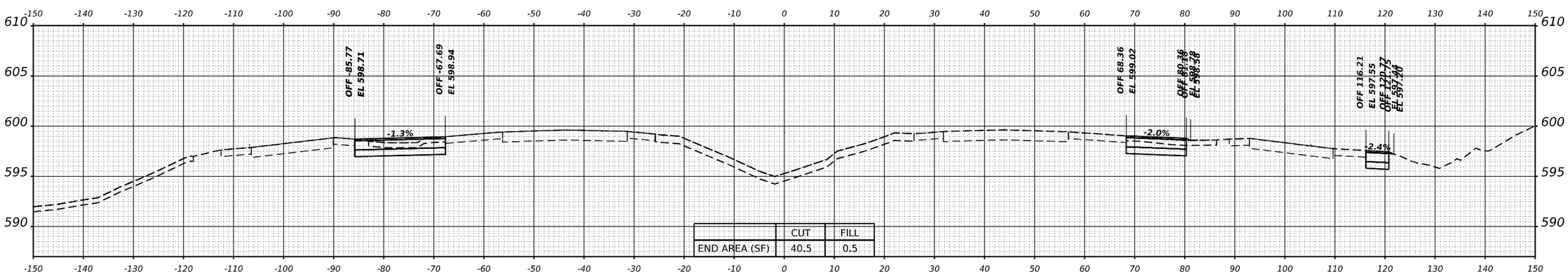

	CUT	FILL
END AREA (SF)	40.5	0.5

STA 454+00.00

FINAL SURVEY	BY	DATE
NOTE BOOK NO.	SURVEYED	
	PLOTTED	
	TEMPLATE	
	AREAS	
	AREAS CHECKED	

ORIGINAL SURVEY	BY	DATE
NOTE BOOK NO.	SURVEYED	
	PLOTTED	
	TEMPLATE	
	AREAS	
	AREAS CHECKED	

MODEL: BL_PR_I80_W - 454+00.00 [Sheet]
FILE NAME: pw://transystems-pw.bentley.com:transyscorp-pw1-hosted/Documents/Projects_2018/CH401/401180022/02-TranSystems/CAD/03-3D/02-Container/PRE-STAGE/D1TSC-CONTAINER_PR_ROADWAY_PRE-STAGE-P2.dgn

TRANSYSTEMS

USER NAME = amkluver	DESIGNED - VLJ	REVISED -	
	DRAWN - MBM	REVISED -	
PLOT SCALE = 0.16666633 ' / in.	CHECKED - JMG	REVISED -	
PLOT DATE = 6/23/2023	DATE - 6/26/23	REVISED -	

STATE OF ILLINOIS
DEPARTMENT OF TRANSPORTATION

CROSS SECTIONS PRE–STAGE
I–80

SCALE: 10:H 5:V | SHEET 20 OF 43 SHEETS | STA. 454+00.00 455+00.00

F.A.I. RTE.	SECTION	COUNTY	TOTAL SHEETS	SHEET NO.
I-80	FAI 80 21 STRUCTURE 6	WILL	898	700
		CONTRACT NO. 62R25		
		ILLINOIS	FED. AID PROJECT	