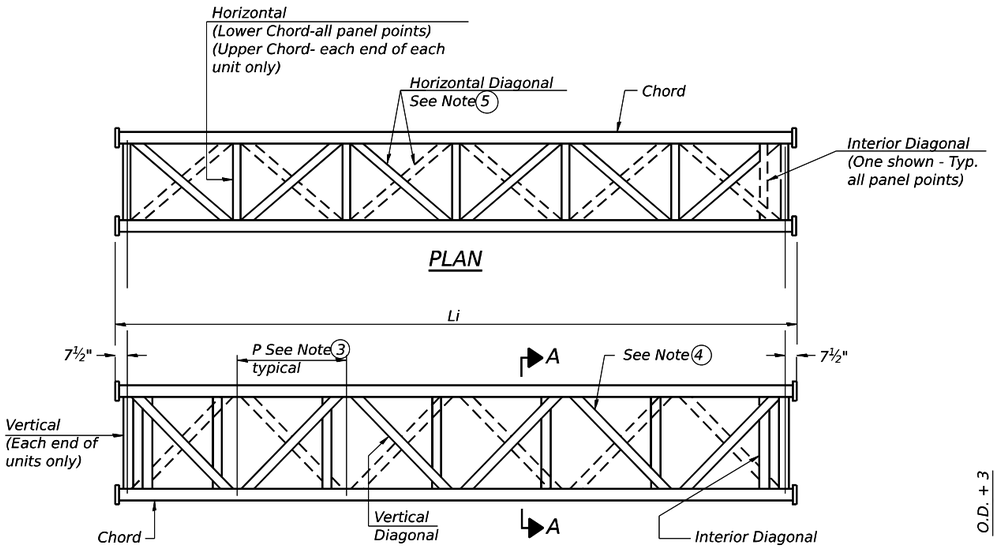

ELEVATION
TYPICAL INTERIOR UNIT
Even number of panels/interior unit required.

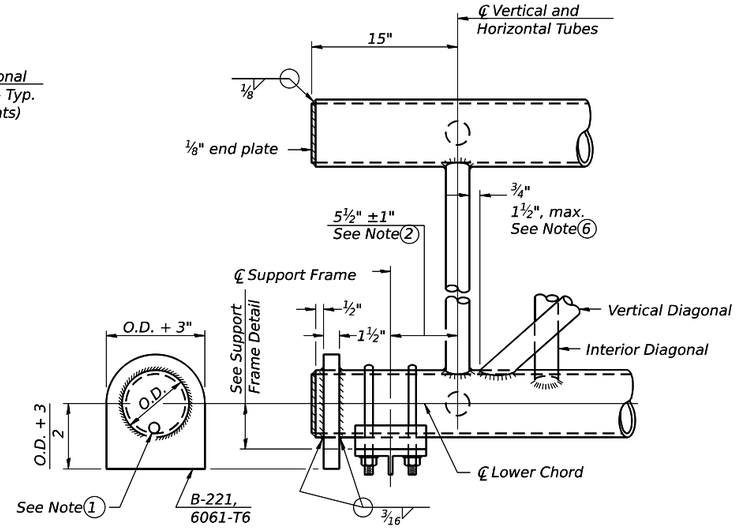

SUPPORT END DETAIL FOR EXTERIOR UNIT

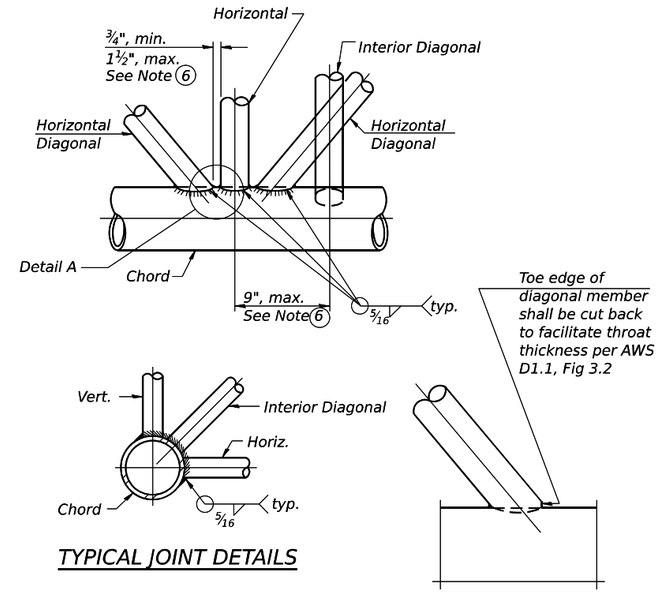

TYPICAL JOINT DETAILS

DETAIL A

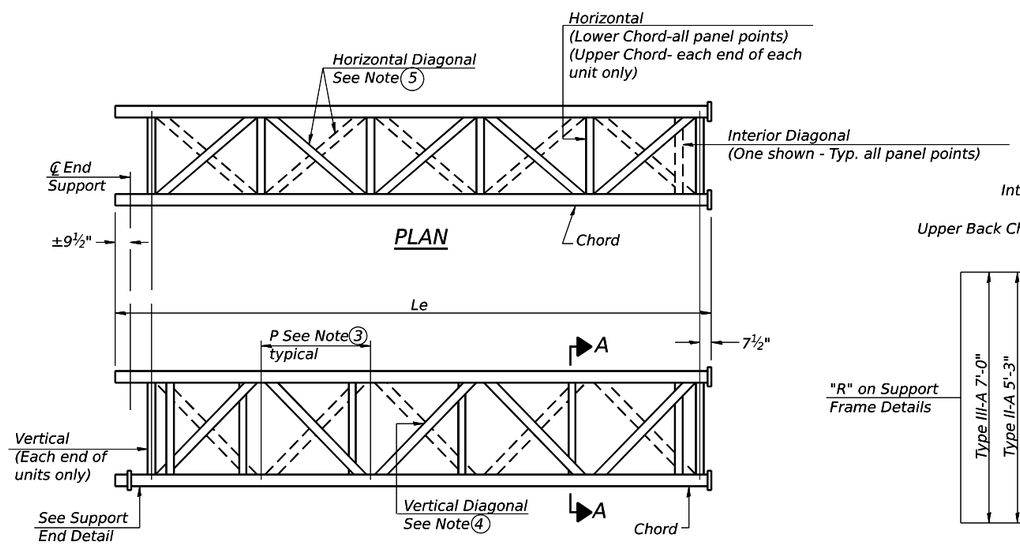

ELEVATION
TYPICAL EXTERIOR UNIT
Even or odd number of panels/exterior units allowed.

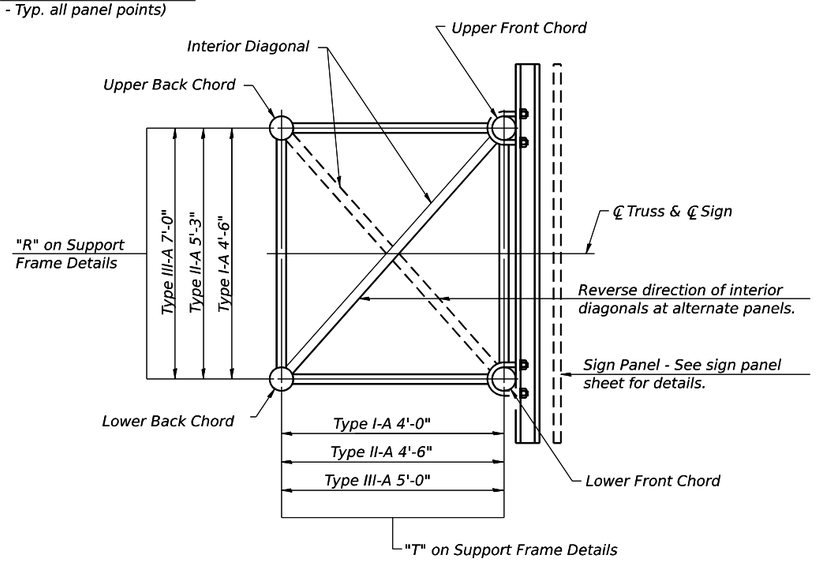

SECTION A-A

1. Contractor may alternatively use standard aluminum drive-fit cap to close end. ½" Ø drain hole in end plate/drive-fit cap. (Typ. at ends of all chords)
2. 5½" end dimension may vary by ±1" to provide uniform panel spacing (P).
3. Panel spacing (P) shall be uniform for entire truss and between 4'-0" and 5'-0" for Type I-A or 4'-0" and 5'-6" for Types II-A and III-A.
4. Vertical Diagonals in front and back face shall alternate.
5. Hidden lines show wind bracing alternates direction between planes of top and bottom chords.
6. All diagonals shall be detailed for minimum offset from the panel point based on the following: Offset shall be such as to provide a ¾" minimum to 1½" maximum clearance between any diagonal and any horizontal or vertical member, and to provide clearance for U-bolt connections of signs or walkway brackets.

OS-A-2 2-17-2017

MODEL: Default
FILE NAME: pw://transystems-pw.bentley.com:transyscorp-pw1-hosted/Documents/Projects_2018/CH401/401180022/02-TranSystems/CAD/62R27/Sheets/22-HTS TS#D62R27-sht-Bsoh-002.dgn

exp.

USER NAME = RussellBr	DESIGNED - CS	REVISED -	STATE OF ILLINOIS DEPARTMENT OF TRANSPORTATION
	DRAWN - CS	REVISED -	
PLOT SCALE = 31.9987 ' / in.	CHECKED - BAR	REVISED -	
PLOT DATE = 6/15/2023	DATE -	REVISED -	

OVERHEAD SIGN STRUCTURES – ALUMINUM TRUSS DETAILS FOR TRUSS TYPES I–A, II–A AND III–A

SCALE: SHEET 2 OF 12 SHEETS STA. TO STA.

F.A.I. RTE.	SECTION	COUNTY	TOTAL SHEETS	SHEET NO.
I-80	FAI 80 21 STRUCTURE 6	WILL	898	501
		CONTRACT NO. 62R27		
	ILLINOIS	FED. AID PROJECT		

TRUSS UNIT TABLE

Structure Number	Station	Design Truss Type	Exterior Units (2)			Interior Unit				Upper & Lower Chord		Verticals; Horizontals; Vertical, Horizontal, and Interior Diagonals		Camber at Midspan	Splicing Flange					
			No. Panels per Unit	Unit Lgth.(Le)	Panel Lgth.(P)	No. Req'd.	No. Panels per Unit	Unit Lgth.(Li)	Panel Lgth.(P)	O.D.	Wall	O.D.	Wall		Bolts		Weld Sizes		A	B
															No./Splice	Dia.	W	W1		
1S099I080R129.0	500+85	III-A	5	27'-4¾''	5'-1¼"	1	6	31'-10½"	5'-1¼"	7"	5/16"	3¼"	5/16"	1"	6	1"	7/16"	5/16"	11½"	15"

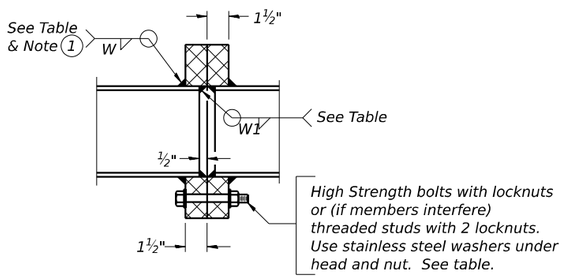

SECTION B-B

1 Splicing Flanges shall be attached to each truss unit with the truss shop assembled to camber shown. Truss units shall be in proper alignment and flange surfaces shall be shop bolted into full contact before welding. Sufficient external welds or tacks shall be made to secure flanges until remaining welds are made after disassembly. Adjacent flanges shall be "match marked" to insure proper field assembly.

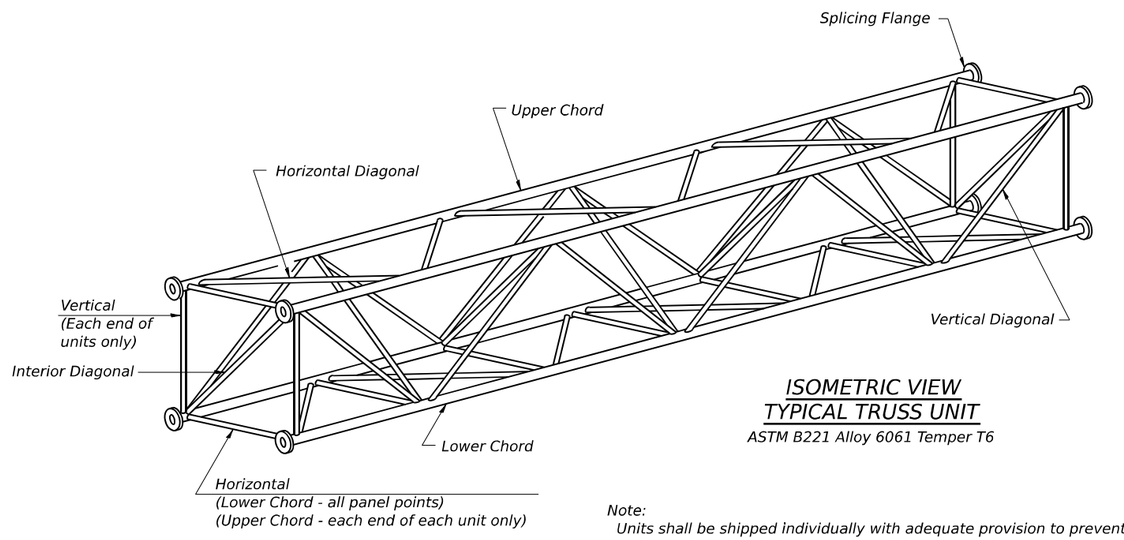

ISOMETRIC VIEW
TYPICAL TRUSS UNIT

ASTM B221 Alloy 6061 Temper T6

Note:
Units shall be shipped individually with adequate provision to prevent detrimental motion during transport. This may require ropes between horizontals and diagonals or energy dissipating (elastic) ties to the vehicle. The Contractor is responsible for maintaining the configuration and protection of the units.

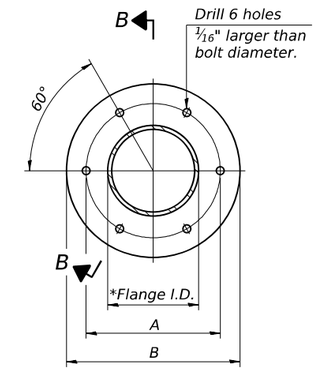

TRUSS TYPES I-A, II-A, & III-A

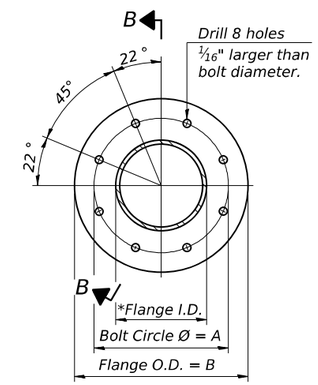

TRUSS TYPES II-A & III-A

SPLICING FLANGES

ASTM B221, Alloy 6061-T6
or ASTM B209, Alloy 6061-T651
*To fit O.D. of Chord with maximum gap of 1/16".

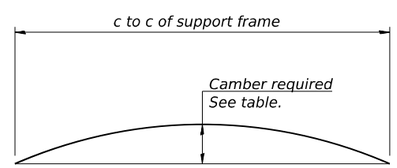

CAMBER DIAGRAM

Camber curve shown is theoretical. Actual camber attained by slope changes at splices between units.

CAMBER ATTAINMENT EXAMPLES:

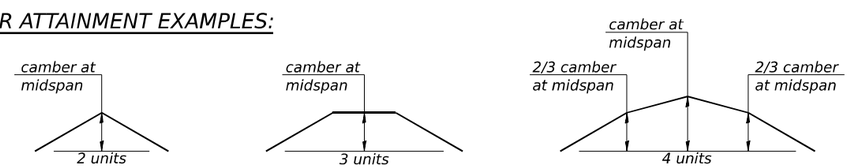

Camber shown is for fabrication only, measured with truss fully supported. (No-load condition)

OS4-A-2 2-17-2017

MODEL: Default
FILE NAME: pw://transystems-pw.bentley.com:transyscorp-pw1-hosted/Documents/Projects_2018/CH401/401180022/02-TranSystems/CAD/62R27/Sheets/22-TS TS/D162R27-sht-tkoohs-003.dgn

exp.	USER NAME = RussellBr	DESIGNED - CS	REVISED -	STATE OF ILLINOIS DEPARTMENT OF TRANSPORTATION	OVERHEAD SIGN STRUCTURES – ALUMINUM TRUSS DETAILS FOR TRUSS TYPES I–A, II–A AND III–A
		DRAWN - CS	REVISED -		
	PLOT SCALE = 31.9987 ' / in.	CHECKED - BAR	REVISED -		
	PLOT DATE = 6/15/2023	DATE -	REVISED -		SCALE: SHEET 3 OF 12 SHEETS STA. TO STA.

F.A.I. RTE.	SECTION	COUNTY	TOTAL SHEETS	SHEET NO.
I-80	FAI 80 21 STRUCTURE 6	WILL	898	502
		CONTRACT NO. 62R27		
	ILLINOIS	FED. AID PROJECT		

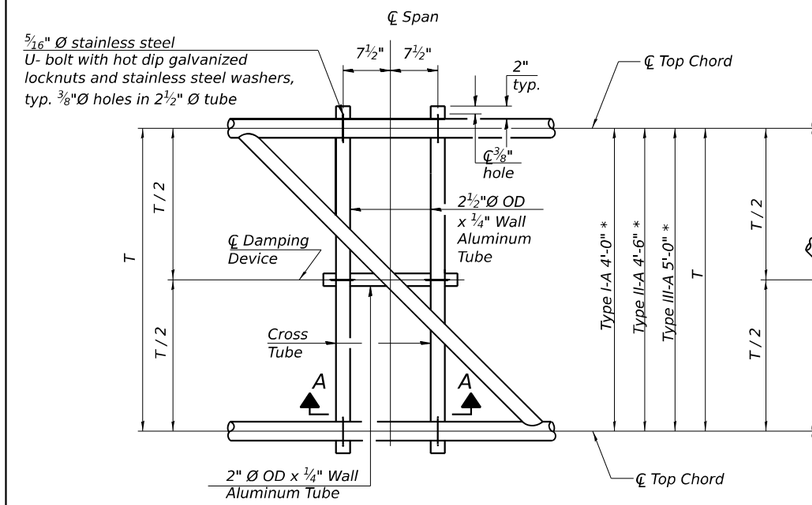

PLAN DETAIL "A"

℄ Span between Panel Points

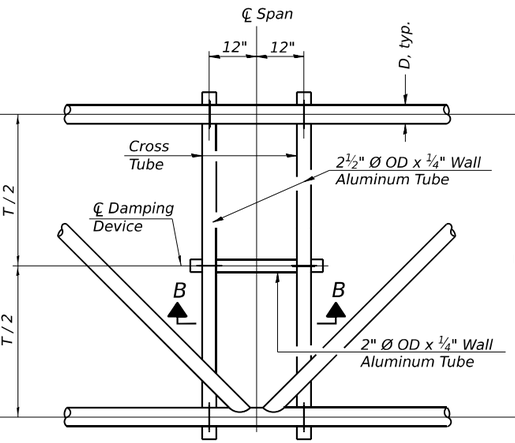

PLAN DETAIL "B"

℄ Span at Panel Point

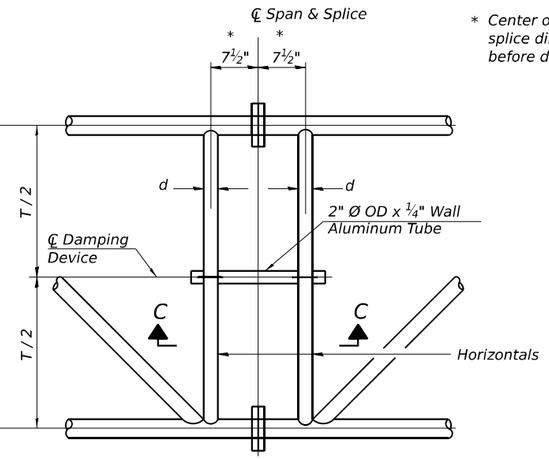

PLAN DETAIL "C"

℄ Span at ℄ Chord Splice

* Center of horizontal to center of splice dimension may vary. Verify before drilling holes in mounting tube.

NOTES

Damper: One damper per truss. (31 lbs. minimum Stockbridge-Type Aluminum - 29"minimum between ends of weights) Cost included in Overhead Sign Structure - Span Type III-A (5'-0'' X 7'-0'')

Materials: Materials: Aluminum tubes shall be ASTM B221 alloy 6061 temper T6. Cost included in Overhead Sign Structure - Span Type III-A (5'-0'' X 7'-0'')

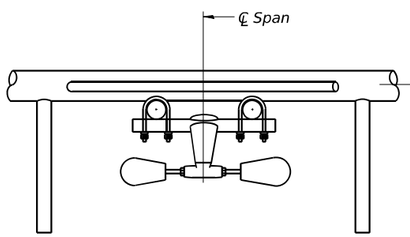

SECTION A-A

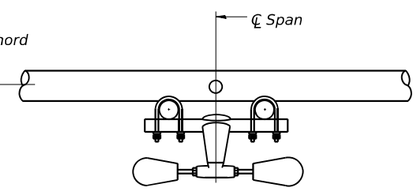

SECTION B-B

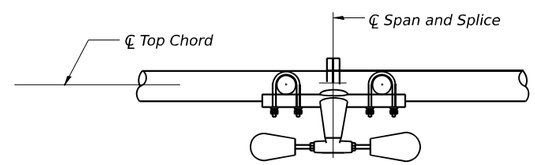

SECTION C-C

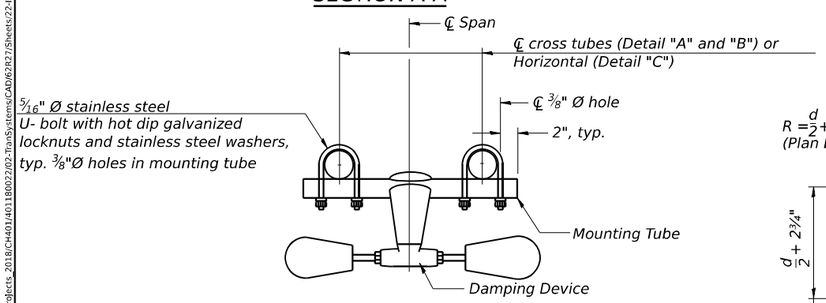

TRUSS DAMPING DEVICE CONNECTION DETAIL

(Typical)

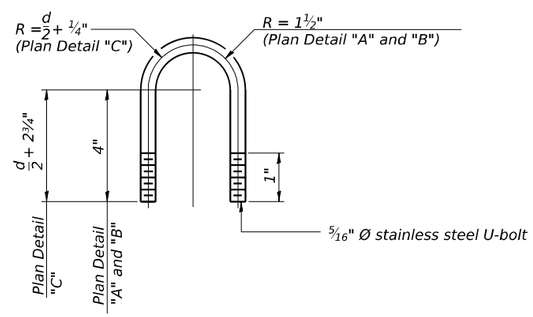

DAMPING DEVICE MOUNTING TUBE U-BOLT DETAIL

(Typical)

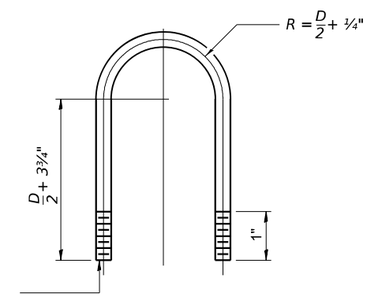

TOP CHORD TO CROSS TUBE U-BOLT DETAIL

(Typical - Detail "A" and "B")

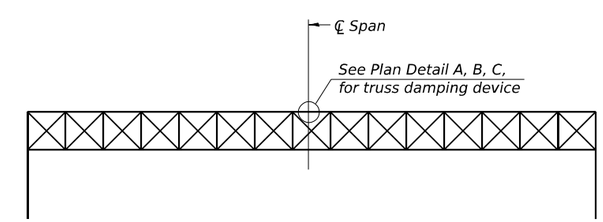

ELEVATION

Aluminum Overhead Sign Truss

OS-A-D 2-17-2017

MODEL: Default
FILE NAME: pw://transystems-pw.bentley.com:transyscorp-pw1-Hosted/Documents/Projects_2018/CH401/401180022/02-TranSystems/CAD/62R27/Sheets/22-TFS TS0162R27-sht-ttsohs-004.dgn

exp.

USER NAME = RussellBr	DESIGNED - CS	REVISED -	
	DRAWN - CS	REVISED -	
PLOT SCALE = 31.9987 ' / in.	CHECKED - BAR	REVISED -	
PLOT DATE = 6/15/2023	DATE -	REVISED -	

STATE OF ILLINOIS
DEPARTMENT OF TRANSPORTATION

OVERHEAD SIGN STRUCTURE
DAMPING DEVICE

SCALE: | SHEET 4 OF 12 SHEETS | STA. TO STA.

F.A.I. RTE.	SECTION	COUNTY	TOTAL SHEETS	SHEET NO.
I-80	FAI 80 21 STRUCTURE 6	WILL	898	503
		CONTRACT NO. 62R27		
	ILLINOIS	FED. AID PROJECT		

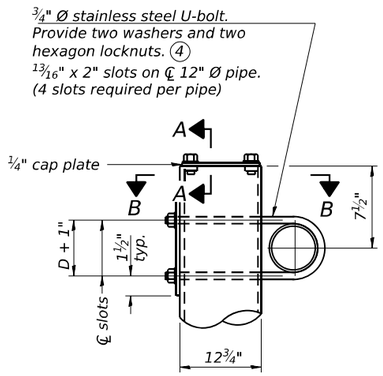

DETAIL A

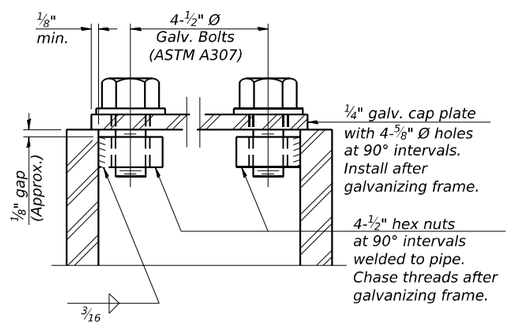

SECTION A-A

As an alternate to bolts, may use galvanized drive-fit caps installed after galvanizing frame.

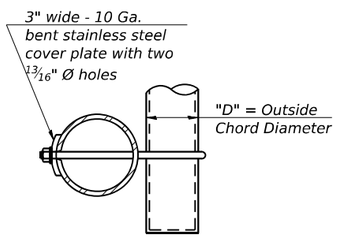

SECTION B-B

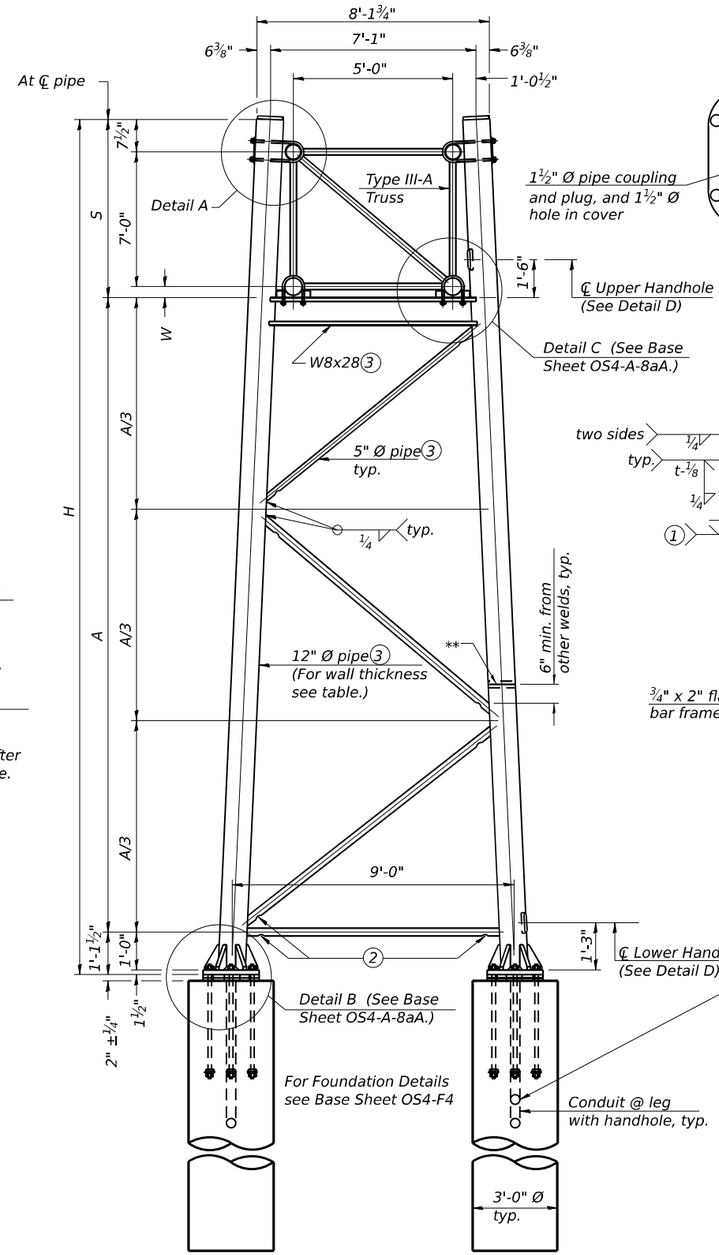

SIDE ELEVATION

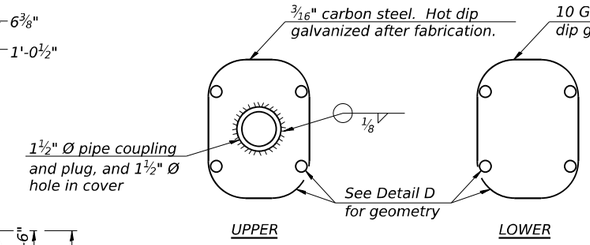

HANDHOLE COVERS

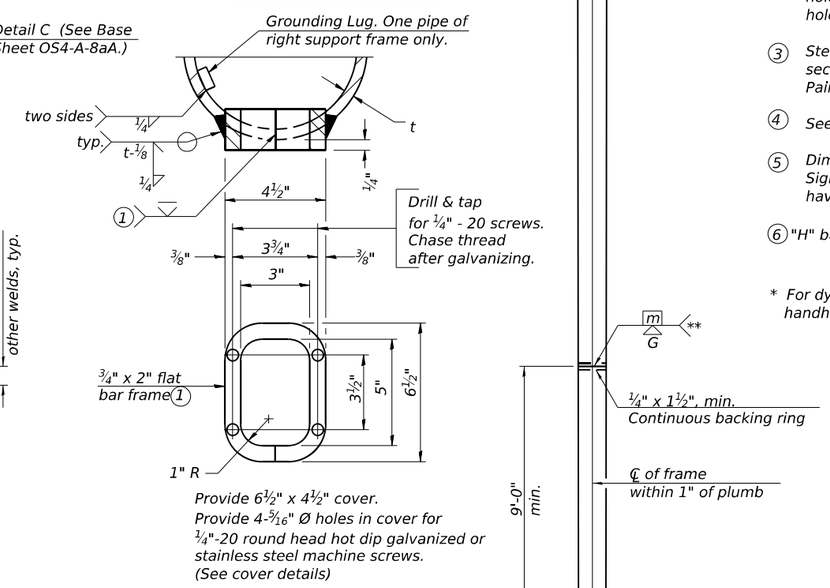

DETAIL D

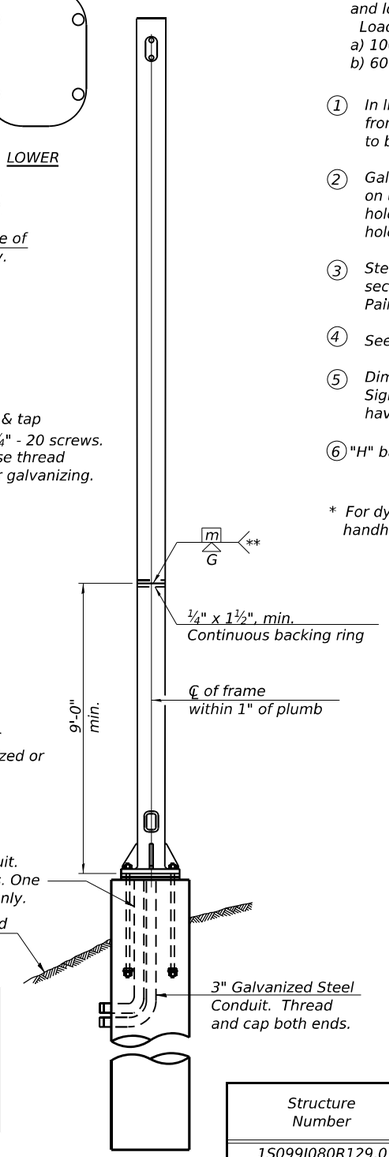

END ELEVATION

Dimensions		
Truss Chord Nominal Dia.	W	S
7"	4 3/4"	8'-0 1/4"
8 1/2"	5 1/2"	8'-1"
9"	5 3/4"	8'-1 1/4"

Support Design Loads: See Base Sheet OS-A-1 for design and loading criteria.
Load combinations checked include deadload plus:
a) 100% wind normal to sign, 20% parallel to sign
b) 60% wind normal to sign, 30% parallel to sign

1. In lieu of fabricated handhole frame as shown, may cut from 2" plate (rolling direction vertical). All cut faces to be ground to ANSI Roughness of 500 µin or less.
2. Galvanizing vent holes of adequate size shall be provided on underside at each end of bracing pipes. Alternately, holes may be provided in wall of pipe column. All vent holes shall be drilled and de-burred, typ.
3. Steel pipe, plate, carbon steel handhole covers and rolled sections shall be hot dip galvanized after fabrication. Painting is not permitted. See Base Sheet OS-A-1.
4. See General Notes for fasteners.
5. Dimensions shown are based on selection criteria in the Sign Structures Manual. Nonstandard applications must have dimensions verified or amended as appropriate.
6. "H" based on 15'-0" or actual sign height, whichever is greater.

* For dynamic message sign installations, provide upper and lower handholes in both legs of each support frame.

Structure Number	Station	Support		Pipe Wall Thickness	H 6	A
		Left	Right			
1S099I080R129.0	500+85	-	X	0.33"	31'-11 3/4"	22'-10"
1S099I080R129.0	500+85	X	-	0.33"	26'-4 3/4"	17'-3"

TRUSS SUPPORT DETAILS

(12" Ø Pipe-Type III-A Truss

** One butt welded joint is allowed only on one post per support frame. If used, weld procedure must be pre-approved by Engineer and joint shall receive 100% RT or UT (tension criteria) at Contractor's expense.

MODEL: Default
FILE NAME: pw://transystems-pw.bentley.com:transyscorp-pw1-hosted/Documents/Projects_2018/CH401/401180022/02-TranSystems/CAD/62R27/Sheets/22-TFS TS0162R27-sht-ttsohs-005.dgn

exp.

USER NAME = RussellBr	DESIGNED - CS	REVISED -	
	DRAWN - CS	REVISED -	
PLOT SCALE = 31.9987 ' / in.	CHECKED - BAR	REVISED -	
PLOT DATE = 6/15/2023	DATE -	REVISED -	

STATE OF ILLINOIS
DEPARTMENT OF TRANSPORTATION

OVERHEAD SIGN STRUCTURES – SUPPORT FRAME FOR TYPE III–A ALUMINUM TRUSS

SCALE: | SHEET 5 OF 12 SHEETS | STA. TO STA.

F.A.I. RTE.	SECTION	COUNTY	TOTAL SHEETS	SHEET NO.
I-80	FAI 80 21 STRUCTURE 6	WILL	898	504
		CONTRACT NO. 62R27		
	ILLINOIS	FED. AID PROJECT		

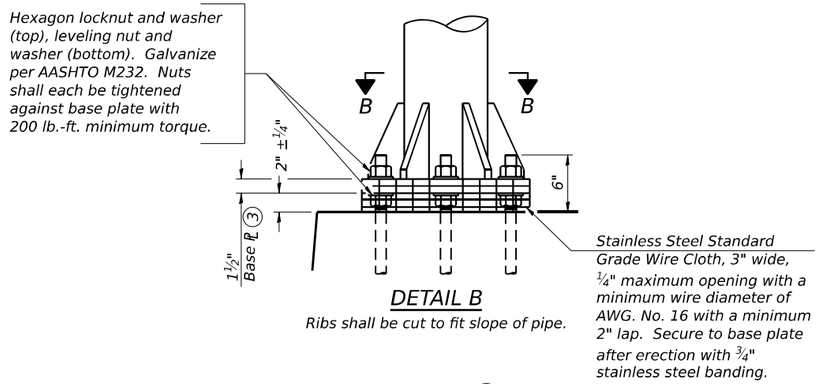

DETAIL B

Ribs shall be cut to fit slope of pipe.

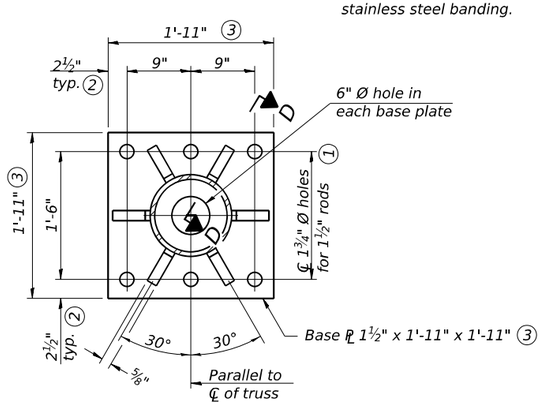

SECTION B-B

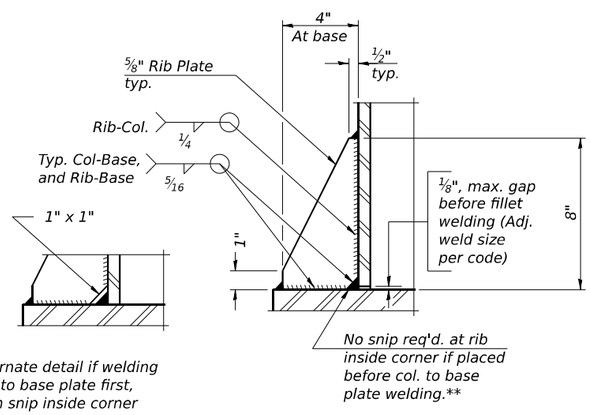

** Alternate detail if welding col. to base plate first, then snip inside corner of ribs. Terminate weld on rib ¼" from snip.

SECTION D-D

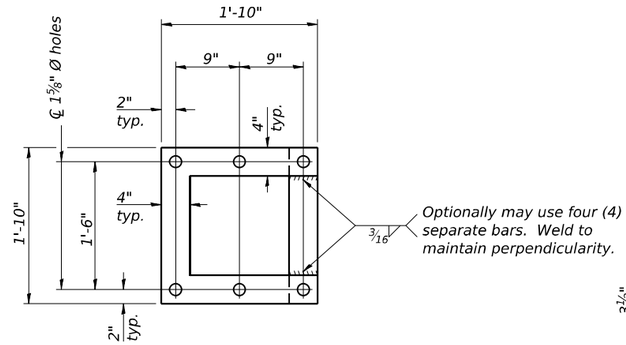

POSITIONING PLATE(S)

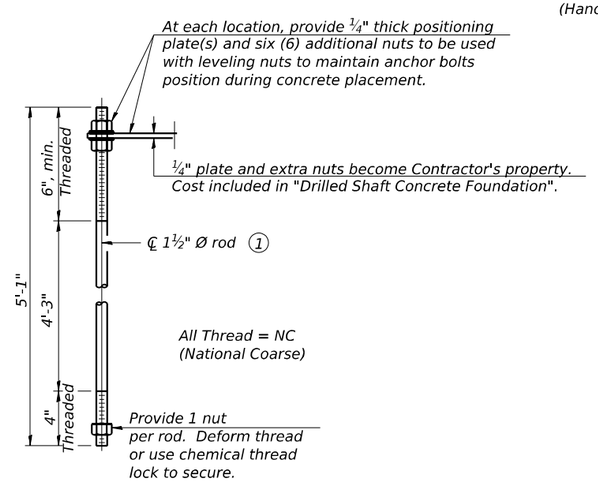

ANCHOR ROD DETAIL

Anchor rods shall conform to ASTM F1554 Grade 105 Galvanize upper 12" minimum per AASHTO M232. No welding shall be permitted on rods.

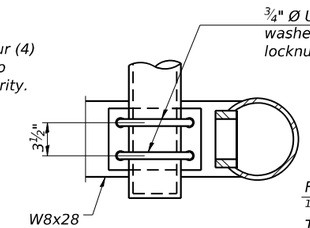

SECTION C-C

(Handhole cover not shown)

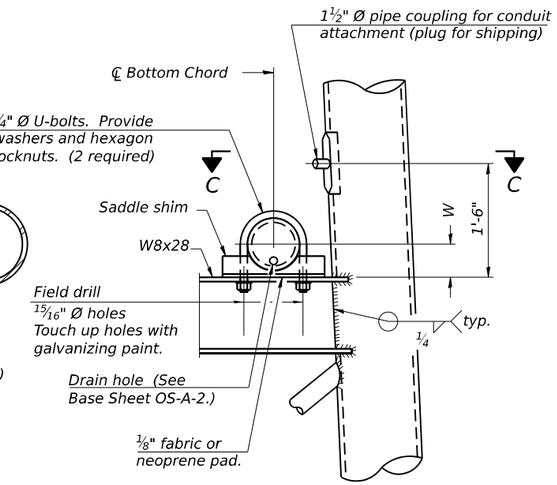

DETAIL C

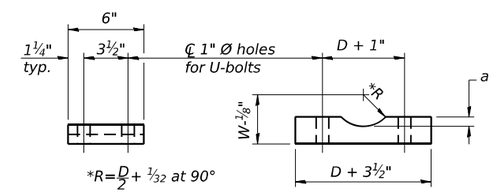

D = Outside Diameter of Chord.
For W, see Base Sheet OS-A-6.

Truss Chord Nominal Dia.	a
7"	1"
8½"	1¼"
9"	1⅜"

SADDLE SHIM DETAIL

ASTM B26 Alloy 356-F
or
ASTM B209 Alloy 6061-T651
(4 required per sign truss)

TYPE III-A TRUSS
12" Ø PIPE SUPPORT FRAME DETAILS

Notes:
For Type III-A Truss spans greater than 150 ft, and up to 160 ft.:

① 1¾" Ø rod, 2" Ø holes

② 2¾" edge distance

③ Base ℄ 1⅝" x 1'-11½" x 1'-11½"

OS4-A-8aA 2-17-2017

exp.

USER NAME = RussellBr	DESIGNED - CS	REVISED -	STATE OF ILLINOIS DEPARTMENT OF TRANSPORTATION
	DRAWN - CS	REVISED -	
PLOT SCALE = 31.9987 ' / in.	CHECKED - BAR	REVISED -	
PLOT DATE = 6/15/2023	DATE -	REVISED -	

OVERHEAD SIGN STRUCTURES
SUPPORT FRAME FOR TYPE III–A ALUMINUM TRUSS

SCALE: SHEET 6 OF 12 SHEETS STA. TO STA.

F.A.I. RTE.	SECTION	COUNTY	TOTAL SHEETS	SHEET NO.
I-80	FAI 80 21 STRUCTURE 6	WILL	898	505

CONTRACT NO. 62R27

ILLINOIS FED. AID PROJECT

MODEL: Default
FILE NAME: pw://transystems-pw.bentley.com:transyscorp-pw1-hosted/Documents/Projects_2018/CH401/401180022/02-TranSystems/CAD/62R27/Sheets/22-ITS TS/D162R27-sh-ItsOhs-006.dgn

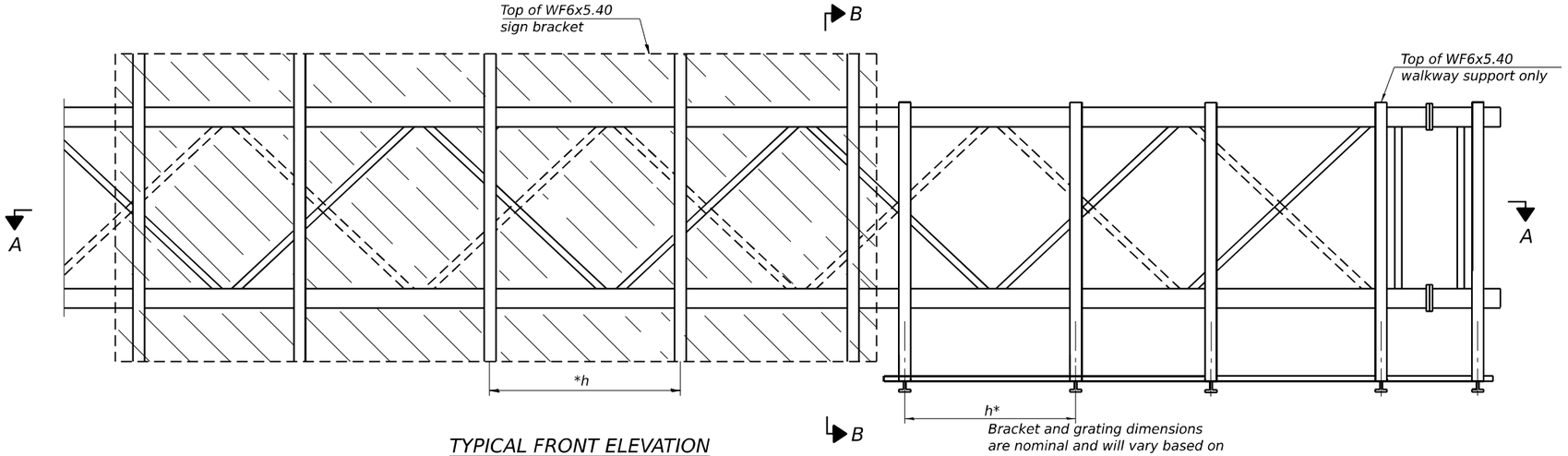

TYPICAL FRONT ELEVATION

With handrail omitted for clarity.

Bracket and grating dimensions are nominal and will vary based on actual DMS cabinet dimensions plus manufacturer's mounting devices.

① If walkway is required left of the DMS cabinet, a=1'-6" and b=walkway lengths. If walkway is not required left of the DMS cabinet, b=0 and "a" is dimension from left support frame to left end of cabinet.

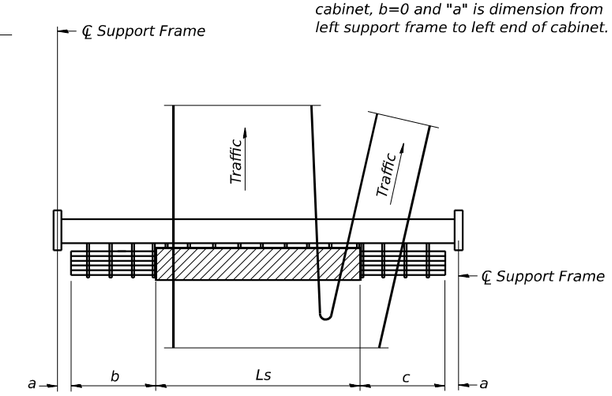

PLAN
WALKWAY AND HANDRAIL SKETCH

(Road plan beneath truss varies)

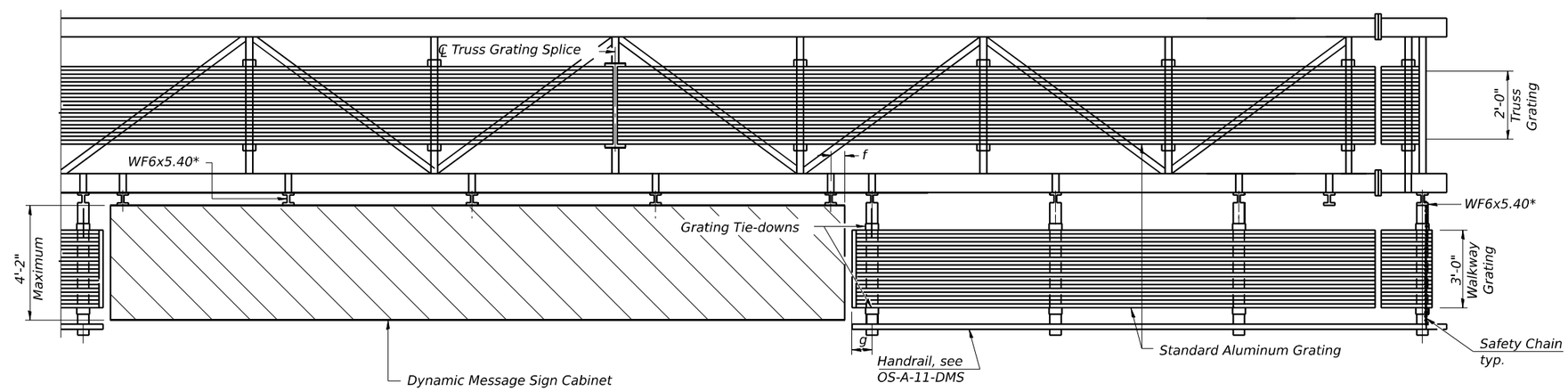

Walkway and Truss Grating width dimensions are nominal and may vary ±½" based on available standard widths.

Truss grating to facilitate inspection shall run full length (center to center of support frames) ±12" on overhead trusses. Cost of truss grating is included in "Overhead Sign Structure".

SECTION A-A

Handrail and walkway shall span a minimum of three brackets between splices and/or gap joints.
Place all sign and walkway brackets as close to panel points as practical.
Grating and handrail splices placed as needed.

BRACKET TABLE

WF6x5.40 ASTM B308, Alloy 6061-T6		
Sign Width		Number Brackets Required
Greater Than	Less Than or Equal To	
	8'-0"	2
8'-0"	14'-0"	3
14'-0"	20'-0"	4
20'-0"	26'-0"	5
26'-0"	32'-0"	6

Structure Number	Station	a	b	c	Ls	Walkway Grating and Handrail Lengths
1S099I080R129.0	500+85	1'-6"	15'-0"	37'-0"	30'-0"	52'-0"

Notes:
* Space walkway brackets WF6x5.40 for efficiency and within limits shown:

f = 12" maximum, 4" minimum (End of sign to ℄ of nearest bracket)
g = 12" maximum, 4" minimum (End of walkway grating to ℄ of nearest support bracket)
h = 6'-0" maximum (℄ to ℄ sign and/or walkway support brackets, WF6x5.40)

Maximum DMS weight = 5000 lbs. 4'-2" maximum cabinet depth includes depth of cabinet plus connection to WF6x5.40.
For Section B-B and Grating Splice Details, see Base Sheet OS-A-10-DMS.
For Handrail Splice Details, see Base Sheet OS-A-11-DMS.

OS-A-9-DMS 2-17-2017

MODEL: Default
FILE NAME: pw://transystems-pw.bentley.com:transyscorp-pw1-hosted/Documents/Projects_2018/CH401/401180022/02-TranSystems/CAD/62R27/Sheets/22-ITS TS/D162R27-sht-itsoh-007.dgn

exp.

USER NAME = RussellBr	DESIGNED - CS	REVISED -	
	DRAWN - CS	REVISED -	
PLOT SCALE = 31.9987 ' / in.	CHECKED - BAR	REVISED -	
PLOT DATE = 6/15/2023	DATE -	REVISED -	

STATE OF ILLINOIS
DEPARTMENT OF TRANSPORTATION

OVERHEAD SIGN STRUCTURES
ALTERNATE ALUMINUM WALKWAY DETAILS FOR DMS

SCALE: SHEET 7 OF 12 SHEETS STA. TO STA.

F.A.I. RTE.	SECTION	COUNTY	TOTAL SHEETS	SHEET NO.
I-80	FAI 80 21 STRUCTURE 6	WILL	898	506
		CONTRACT NO. 62R27		
	ILLINOIS	FED. AID PROJECT		

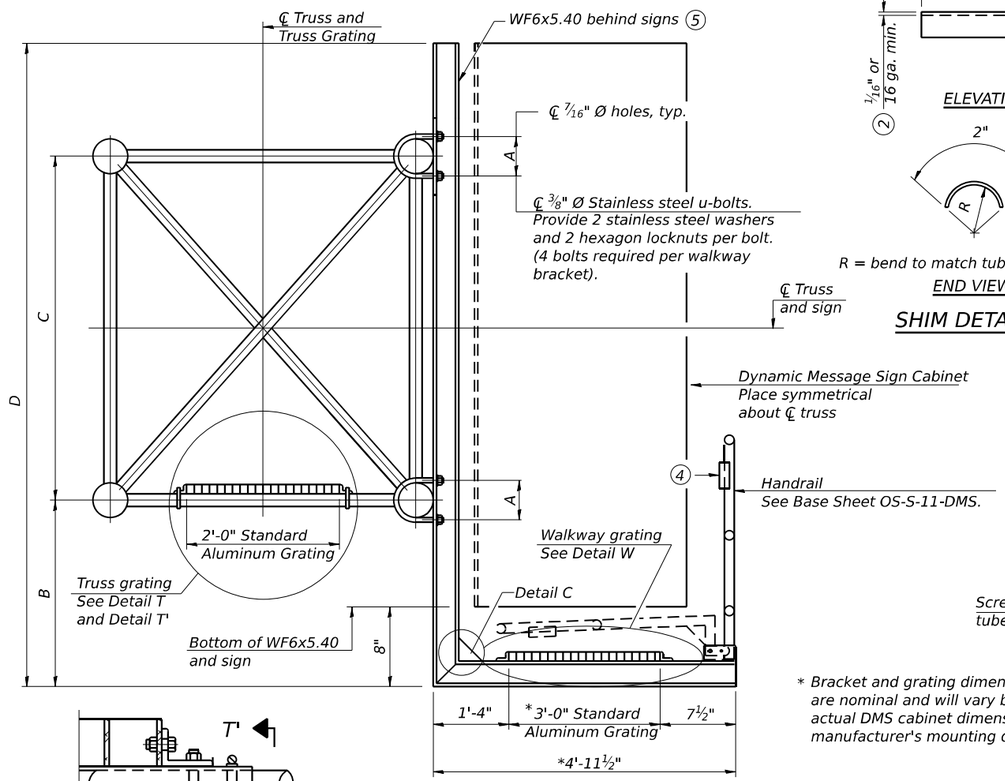

SECTION B-B

* Bracket and grating dimensions are nominal and will vary based on actual DMS cabinet dimensions plus manufacturer's mounting devices.

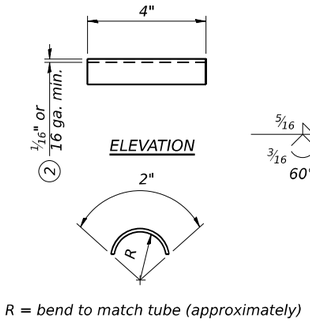

SHIM DETAIL

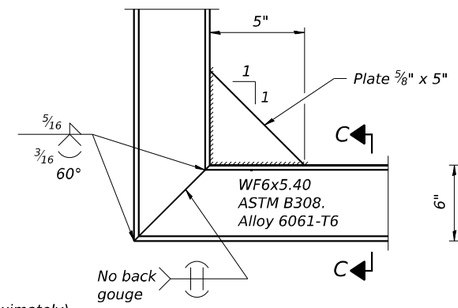

DETAIL C

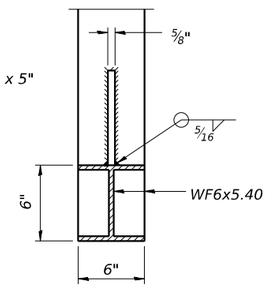

SECTION C-C

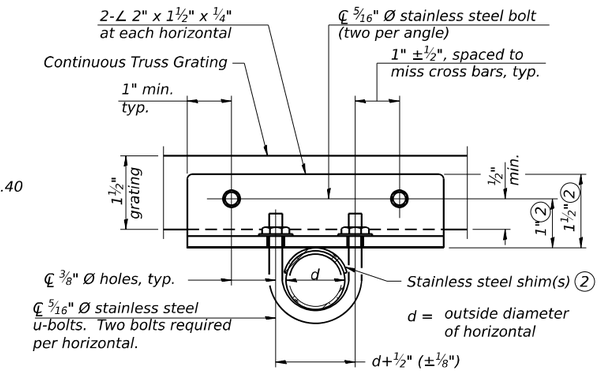

SECTION T-T

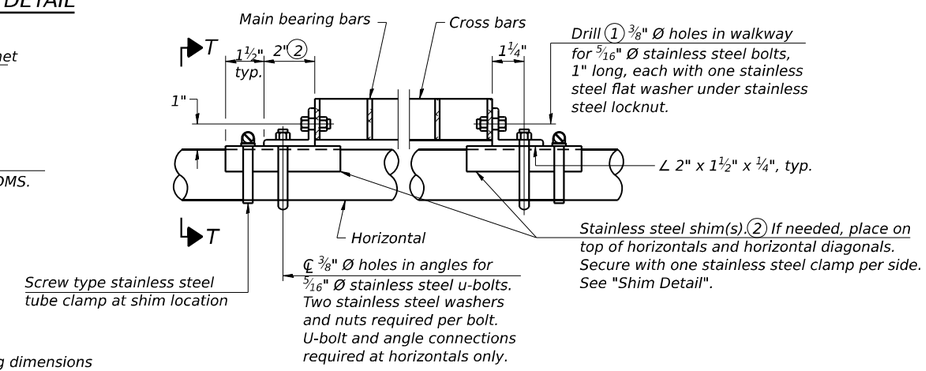

DETAIL T

(Continuous Truss grating)

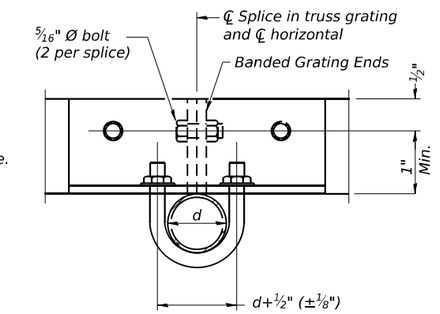

SECTION T'-T'

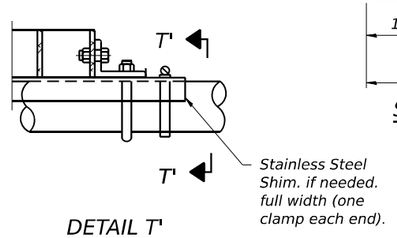

DETAIL T'

(Truss grating splice)
Details not shown same as Detail T.
Alternate materials may be used subject to the Engineer's review and approval.

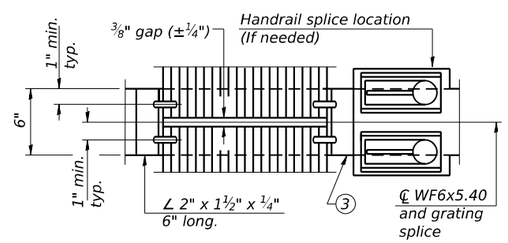

(AT WALKWAY GRATING SPLICE)

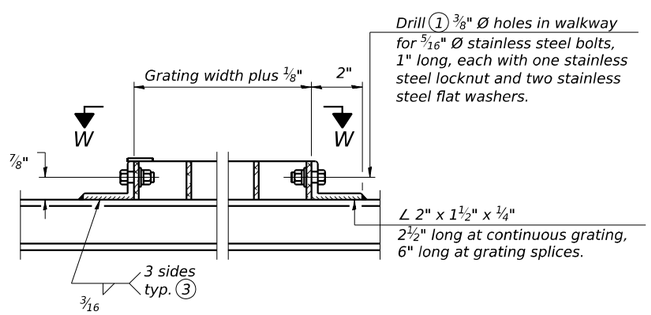

DETAIL W

(Walkway grating)

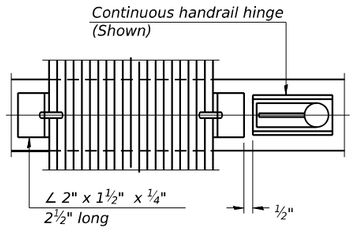

(CONTINUOUS WALKWAY GRATING)

SECTION W-W

SPECIFICATIONS FOR STANDARD ALUMINUM GRATING

Main Bearing Bars shall be 3/16" x 1½" on 1 3/16" centers and conform to ASTM B211 Alloy 6061-T6.

Cross bars shall be 3/16" x 1½" on 4" centers and conform to ASTM B221 Alloy 6063-T5 or 6061-T6.

OR

Aluminum Grating with modified "t" sections for main bearing bars shall meet the following requirements:

Main bars shall conform to ASTM B221 Alloy 6061-T6 and have a minimum section modulus equal to 0.0705 in.³ per bar, a depth of 1½", spaced on 1 3/16" centers.

Cross bars shall conform to ASTM B221 Alloy 6063-T5 or T-42 and spaced on 4" centers.

Structure Number	Station	A	(6) B	C	(6) D
1S099I080R129.0	500+85	7½"	1'-2"	7'-0"	8'-8"

(1) Drilling holes in grating may be done in shop or field, based on Contractor's preference and subject to accurate alignment.

(2) Stainless steel shims shall be placed as shown in Detail T if needed to compensate for alignment variations between horizontal and diagonal pipes beyond adjustment provided by angles. Thicker shims may be used subject to shims performing properly.

(3) If Handrail Joint present, weld angle to WF(A-N)4 and ¼" extension bars. (See Base Sheet OS-A-11-DMS.)

(4) PL ⅛" x ½" x 2" welded to handrail posts to protect locations that contact grating.

(5) Cabinet manufacturer must design and supply hardware for connection of cabinet to WF6's. Bolts must be stainless steel or hot dip galvanized high strength per IDOT specifications.

(6) Based on actual height of tallest sign given on OS-A-1.

OS-A-10-DMS 2-17-2017

MODEL: Default
FILE NAME: pw://transystems-pw.bentley.com:transyscorp-pw1-hosted/Documents/Projects_2018/CH401/401180022/02-TransSystems/CAD/62R27/Sheets/22-ITS TSD/62R27-sht-ttsohs-008.dgn

exp.

USER NAME = RussellBr	DESIGNED - CS	REVISED -	
	DRAWN - CS	REVISED -	
PLOT SCALE = 31.9987 ' / in.	CHECKED - BAR	REVISED -	
PLOT DATE = 6/15/2023	DATE -	REVISED -	

STATE OF ILLINOIS
DEPARTMENT OF TRANSPORTATION

OVERHEAD SIGN STRUCTURES
ALTERNATE ALUMINUM WALKWAY DETAILS FOR DMS

SCALE: SHEET 8 OF 12 SHEETS STA. TO STA.

F.A.I. RTE.	SECTION	COUNTY	TOTAL SHEETS	SHEET NO.
I-80	FAI 80 21 STRUCTURE 6	WILL	898	507
		CONTRACT NO. 62R27		
	ILLINOIS	FED. AID PROJECT		

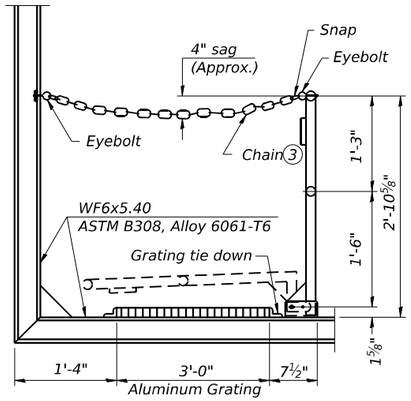

SIDE ELEVATION

(Showing safety chain w/o sign)

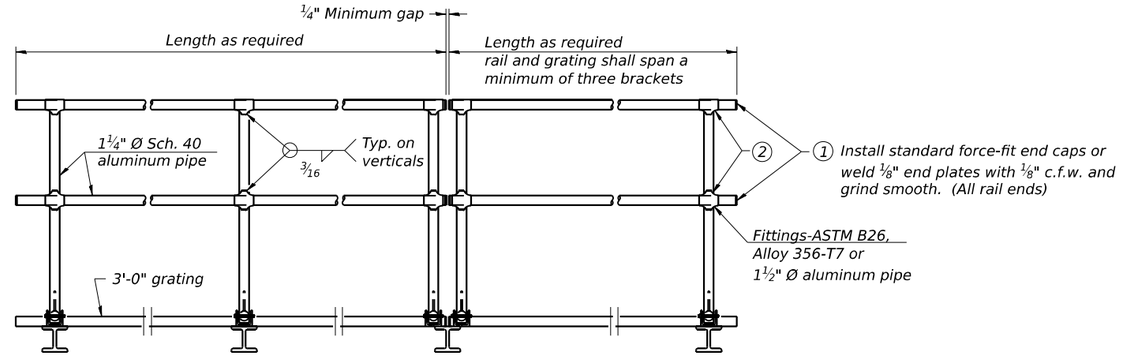

FRONT ELEVATION

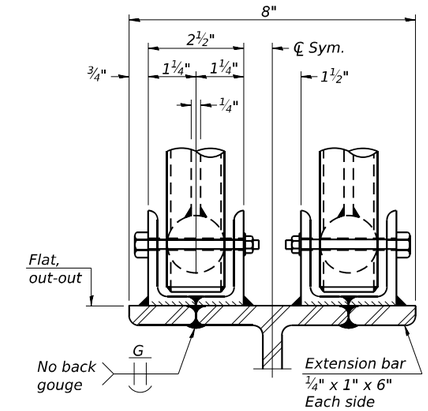

ELEVATION AT HANDRAIL JOINT (4)

HANDRAIL DETAILS

Handrail pipe shall be ASTM B241, Alloy 6063-T6 or Alloy 6061-T6.

(2) Horizontal handrail member shall be continuous thru fitting. Provide 7/16" Ø hole in fitting for 3/8" Ø bolt. Field drill 7/16" Ø hole in horizontal rail member. Provide washer and locknut for bolt. (Use 5/16" eyebolts in 7/16" Ø holes on top rail at ends only.)

(3) 3/16" type 304L stainless steel chain, approximately 12 links per foot.

(4) Extrusions may be used in lieu of the details shown, with approval of the Engineer.

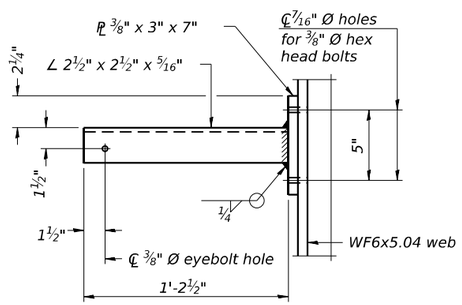

SECTION P-P

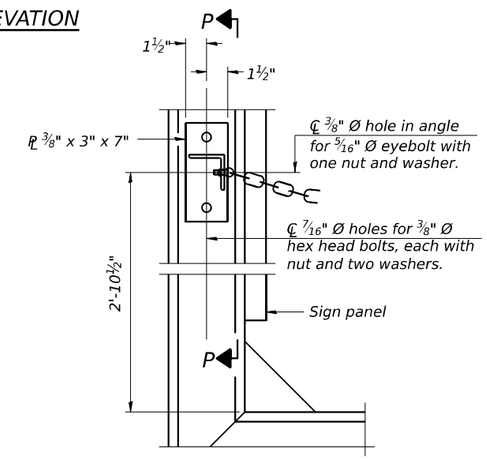

ALTERNATE SAFETY CHAIN ATTACHMENT

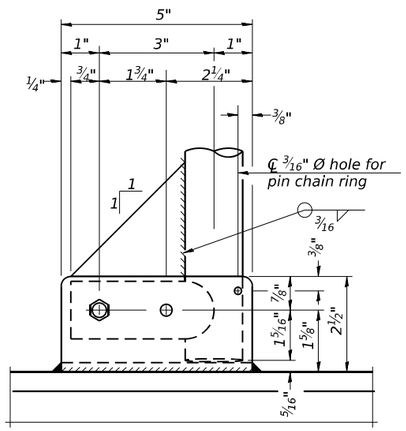

SIDE ELEVATION

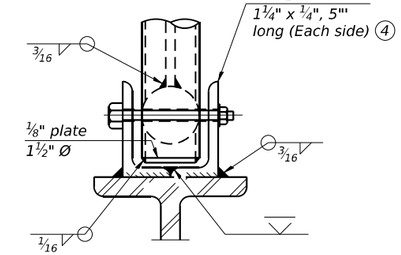

FRONT ELEVATION

See "ELEVATION" at right for dimensions.

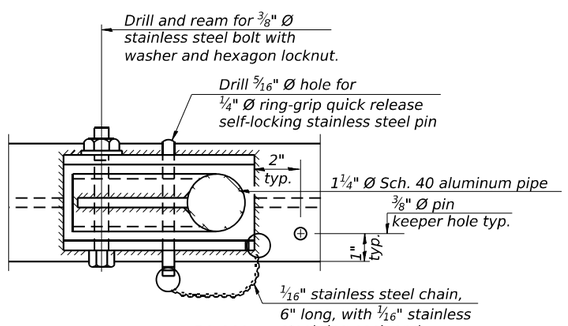

PLAN

DETAIL E HANDRAIL HINGE

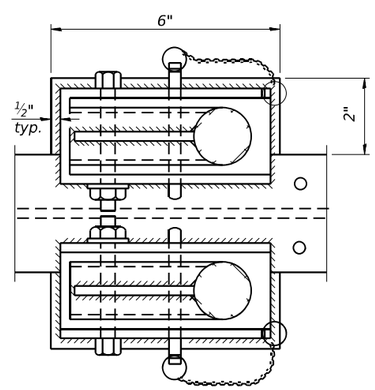

PLAN AT HANDRAIL JOINT

Details not shown same as "PLAN"

(With Sign Present)
Items not shown same as "Side Elevation" of "Handrail Details"

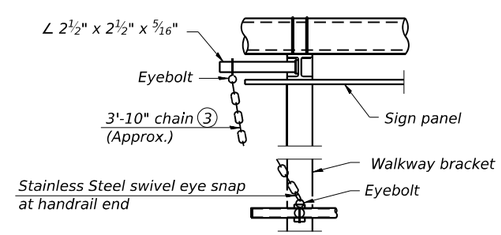

ALTERNATE SAFETY CHAIN ATTACHMENT

Details not shown similar to "Safety Chain" Details
(Walkway omitted for clarity)

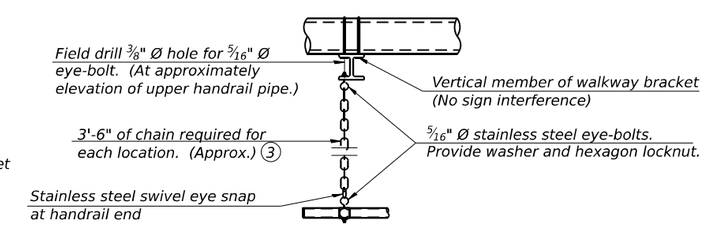

SAFETY CHAIN

One required for each end of each walkway.

OS-A-11-DMS 2-17-2017

MODEL: Default
FILE NAME: pw://transystems-pw.bentley.com:transyscorp-pw1-hosted/Documents/Projects_2018/CH401/401180022/02-TranSystems/CAD/62R27/Sheets/22-ITS TSD162R27-sht-Itsoha-009.dgn

exp.

USER NAME = RussellBr	DESIGNED - CS	REVISED -	STATE OF ILLINOIS DEPARTMENT OF TRANSPORTATION
	DRAWN - CS	REVISED -	
PLOT SCALE = 31.9987 ' / in.	CHECKED - BAR	REVISED -	
PLOT DATE = 6/15/2023	DATE -	REVISED -	

OVERHEAD SIGN STRUCTURES
ALTERNATE ALUMINUM HANDRAIL DETAILS FOR DMS

SCALE: | SHEET 9 OF 12 SHEETS | STA. TO STA.

F.A.I. RTE.	SECTION	COUNTY	TOTAL SHEETS	SHEET NO.
I-80	FAI 80 21 STRUCTURE 6	WILL	898	508
		CONTRACT NO. 62R27		
		ILLINOIS FED. AID PROJECT		

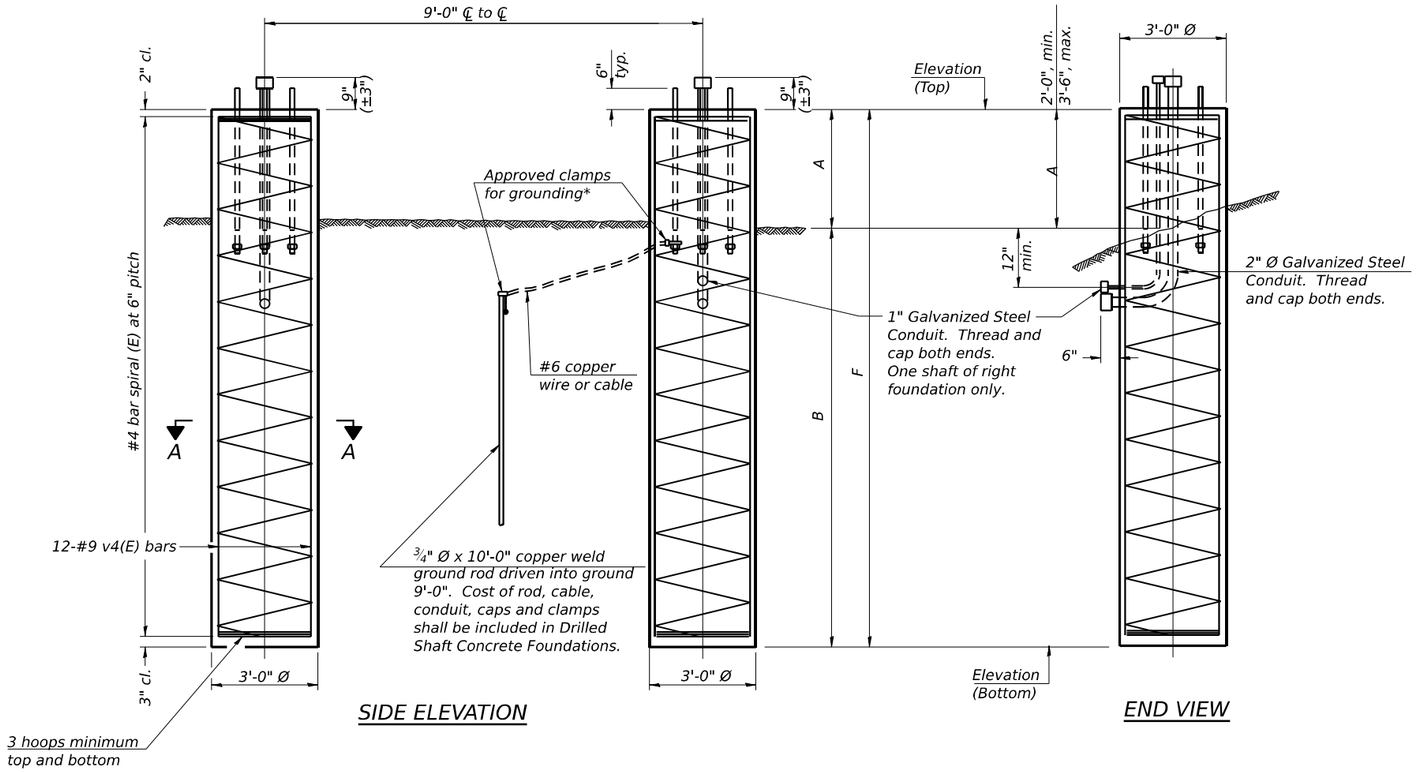

SIDE ELEVATION

END VIEW

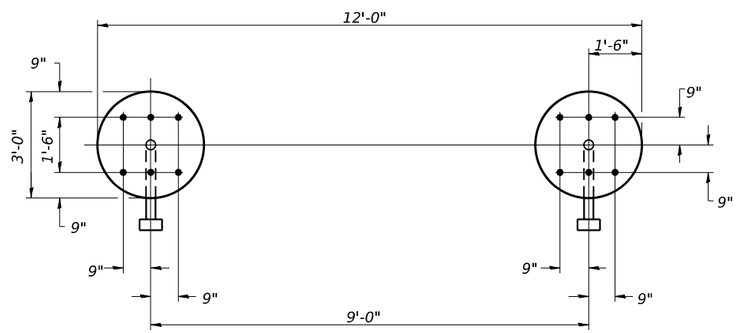

PLAN

For anchor rod size and placement, see Support Frame Detail Sheet.

* Anchor rod shall be ground or filed to bright metal at clamp and cable connection location.

BAR LIST - EACH FOUNDATION

Bar	Number	Size	Length	Shape
v4(E)	24	#9	F less 5"	———
#4 bar spiral (E) - see Side Elevation				

NOTES:

The foundation dimensions shown are based on the presence of mostly cohesive soils with an average Unconfined Compressive Strength (Qu) of at least 1.25 tsf, which must be determined by previous soil investigations at the jobsite. When other conditions are indicated, the boring data will be included in the plans and the foundation dimensions shown will be the result of site specific designs.

If the conditions encountered are different than those indicated, the Contractor shall notify the Engineer to determine if the foundation dimensions need to be modified. If dimensions "B" or "F" are revised by more than 12" by the Contractor, "as-built" plans shall be prepared and submitted to the District Bureau of Operations for future reference.

No sonotubes or decomposable forms shall be used below the lower conduit entrance.

Permanent metal forms or other shielding may not be left in place below that elevation without the Engineer's written permission.

Concrete shall be placed monolithically, without construction joints.

Backfill shall be placed per Article 502 of Standard Specification and prior to erection of support column.

A normal surface finish followed by a Concrete Sealer application will be required on concrete surfaces above the lowest elevation 6" below finished ground line. Cost included in Drilled Shaft Concrete Foundation.

Based on the soil boring logs provided, rock excavation for drilled shaft construction is not anticipated. A nominal quantity of Rock Excavation for Structures has been included to account for variability in the actual rock profile encountered during construction. This item shall only be measured for payment with the approval of the Engineer.

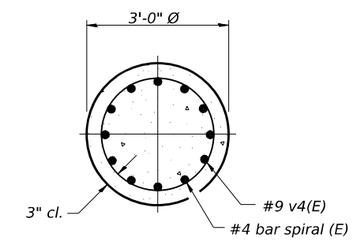

SECTION A-A

DETAILS FOR 12" Ø SUPPORT FRAME
TYPE III-A TRUSS

Structure Number	Station	Left Foundation					Right Foundation					Class DS Concrete (Cu. Yds.)	Rock Excavation for Structures (Cu. Yds.)
		Elevation Top	Elevation Bottom	A	B	F	Elevation Top	Elevation Bottom	A	B	F		
1S099I080R129.0	500+85	-	-	-	-	-	594.86	574.36	2'-6"	18'-0"	20'-6"	10.7	1

MODEL: Default
FILE NAME: pw://transystems-pw.bentley.com:transyscorp-pw1-hosted/Documents/Projects_2018/CH401/401180022/02-TranSystems/CAD/62R27/Sheets/22-ITS TS/D162R27-sht-Hoohs-010.dgn

exp.

USER NAME = RussellBr	DESIGNED - CS	REVISED -	
	DRAWN - CS	REVISED -	
PLOT SCALE = 31.9987 ' / in.	CHECKED - BAR	REVISED -	
PLOT DATE = 8/2/2023	DATE - 8/10/2023	REVISED -	

STATE OF ILLINOIS
DEPARTMENT OF TRANSPORTATION

OVERHEAD SIGN STRUCTURES
DRILLED SHAFT DETAILS

SCALE: | SHEET 10 OF 12 SHEETS | STA. TO STA.

F.A.I. RTE.	SECTION	COUNTY	TOTAL SHEETS	SHEET NO.
I-80	FAI 80 21 STRUCTURE 6	WILL	898	509
		CONTRACT NO. 62R27		
	ILLINOIS	FED. AID PROJECT		

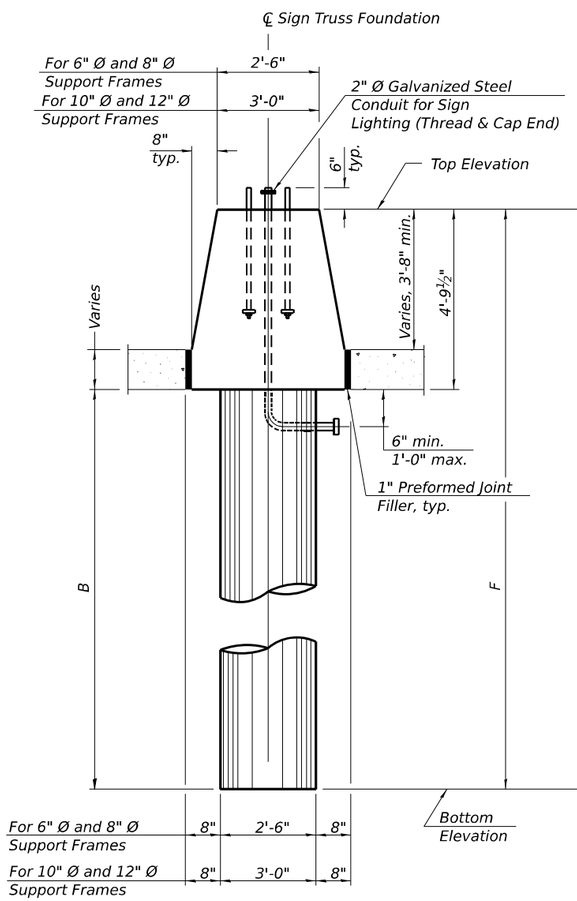

END VIEW

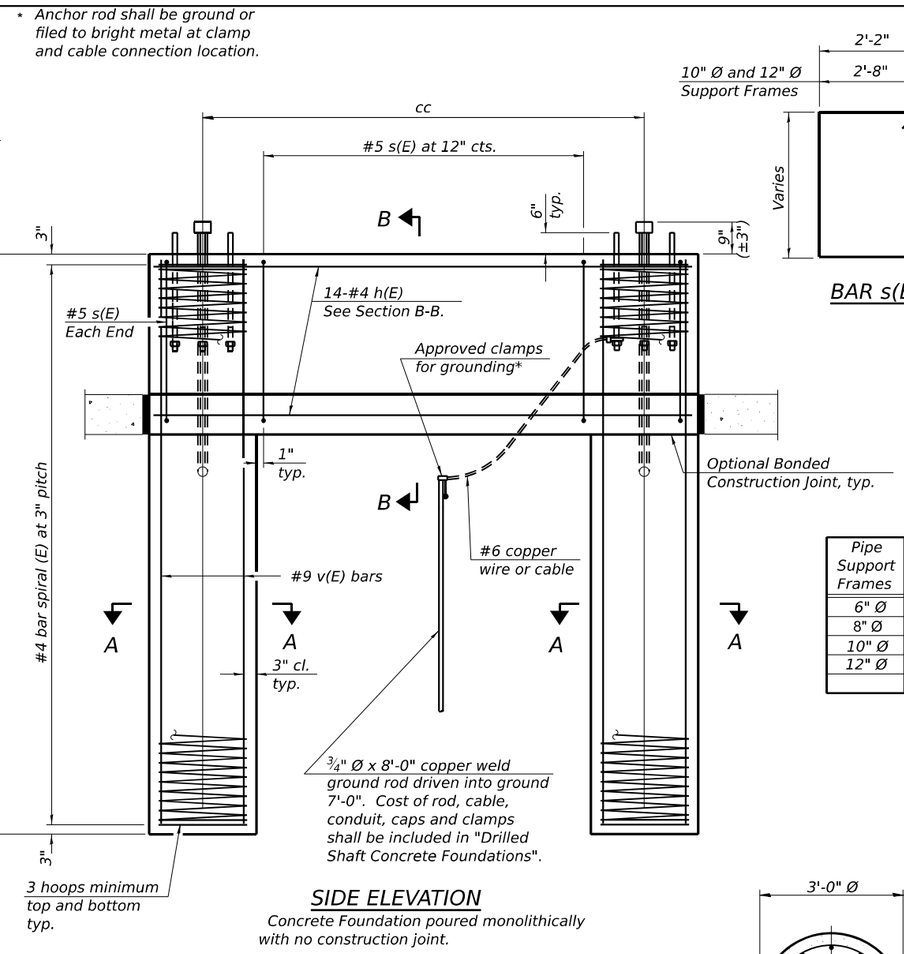

SIDE ELEVATION

Concrete Foundation poured monolithically with no construction joint.

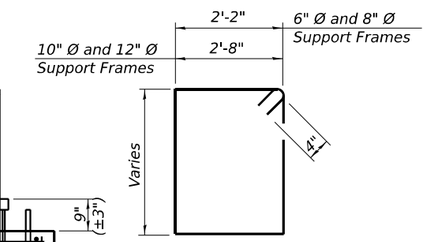

BAR s(E)

NOTES:

The foundation dimensions shown are based on the presence of mostly cohesive soils with an average Unconfined Compressive Strength (Qu) of at least 1.25 tsf, which must be determined by previous soil investigations at the jobsite. When other conditions are indicated, the boring data will be included in the plans and the foundation dimensions shown will be the result of site specific designs.

If the conditions encountered are different than those indicated, the Contractor shall notify the Engineer to determine if the foundation dimensions need to be modified. If dimensions "B" or "F" are revised by more than 12" by the Contractor, "as-built" plans shall be prepared and submitted to the District Bureau of Operations for future reference.

No sonotubes or decomposable forms shall be used below the lower conduit entrance.

Permanent metal forms or other shielding may not be left in place below that elevation without the Engineer's written permission.

Concrete shall be placed monolithically, without construction joints.

Backfill shall be placed per Article 502 of Standard Specification and prior to erection of support column.

A normal surface finish followed by a Concrete Sealer application will be required on concrete surfaces above the lowest elevation 6" below finished ground line. Cost included in Drilled Shaft Concrete Foundation.

Based on the soil boring logs provided, rock excavation for drilled shaft construction is not anticipated. A nominal quantity of Rock Excavation for Structures has been included to account for variability in the actual rock profile encountered during construction. This item shall only be measured for payment with the approval of the Engineer.

BAR LIST - EACH FOUNDATION

Bar	Number	Size	Length	Shape
h(E)	14	#4	M less 4"	
s(E)	Varies	#5	Varies	
v(E)	16	#9	F less 0'-5"	
v(E)	24	#9	F less 0'-5"	
#4(E) bar spiral. See Side Elevation				

6" Ø and 8" Ø Support Frame

10" Ø and 12" Ø Support Frame

Pipe Support Frames	cc	M	a	a/2
6" Ø	7'-0"	9'-6"	0'-11"	5½"
8" Ø	7'-6"	10'-0"	1'-1½"	6¾"
10" Ø	8'-3"	11'-3"	1'-3"	7½"
12" Ø	9'-0"	12'-0"	1'-6"	9"

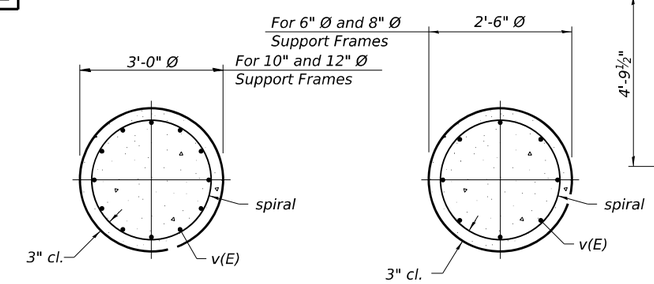

SECTION A-A

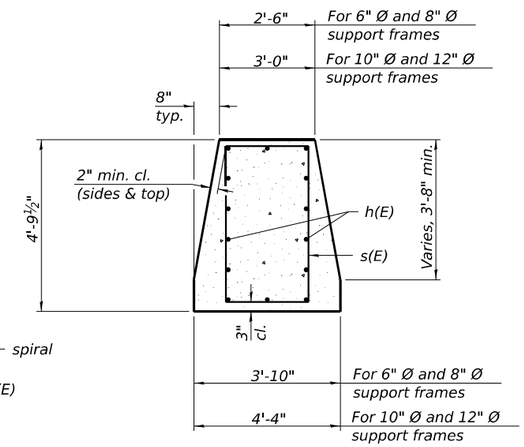

SECTION B-B

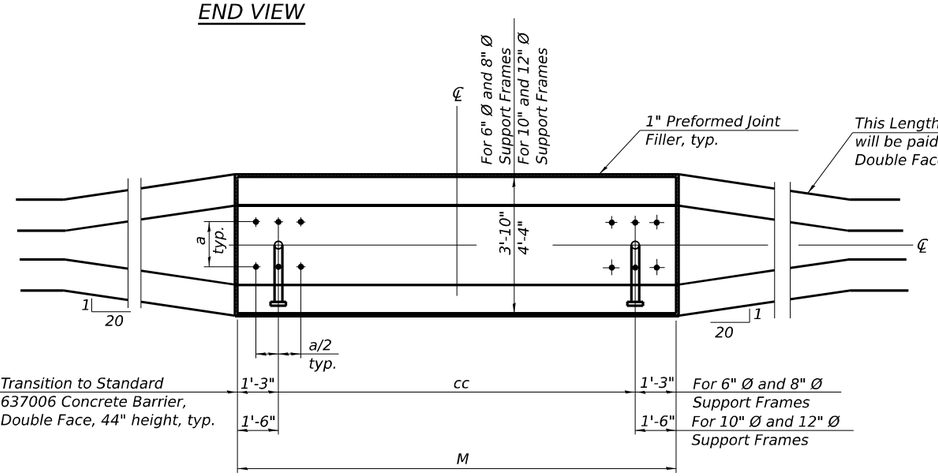

PLAN

Structure Number	Station	Left Foundation				Right Foundation				Class DS Concrete (Cu. Yds.)	Rock Excavation for Structures (Cu. Yds.)
		Elevation Top	Elevation Bottom	B	F	Elevation Top	Elevation Bottom	B	F		
1S099I080R129.0	500+85	600.03	577.24	18'-0"	22'-9½"	-	-	-	-	17.6	1

MODEL: Default
FILE NAME: pw://transystems-pw.bentley.com:transyscorp-pw1-hosted/Documents/Projects_2018/CH401/401180022/02-TranSystems/CAD/62R27/Sheets/22-TTS TSD162R27-sht-tkoohs-011.dgn

exp.

USER NAME = RussellBr	DESIGNED - CS	REVISED -	
	DRAWN - CS	REVISED -	
PLOT SCALE = 31.9987 ' / in.	CHECKED - BAR	REVISED -	
PLOT DATE = 8/2/2023	DATE - 8/10/2023	REVISED -	

STATE OF ILLINOIS
DEPARTMENT OF TRANSPORTATION

OVERHEAD SIGN STRUCTURES
MEDIAN SUPPORT FOUNDATION DETAILS

SCALE: | SHEET 11 OF 12 SHEETS | STA. TO STA.

F.A.I. RTE.	SECTION	COUNTY	TOTAL SHEETS	SHEET NO.
I-80	FAI 80 21 STRUCTURE 6	WILL	898	510
		CONTRACT NO. 62R27		
	ILLINOIS	FED. AID PROJECT		

Wang Engineering
wangeng@wangeng.com
1145 N. Main Street
Lombard, IL 60148
Telephone: 630-953-9928
Fax: 630-953-9938

BORING LOG DMS1-01

WEI Job No.: 7901-15-01

Client: TranSystems Corporation
Project: I-80 Reconstruction (Houbolt Rd to Center St)
Location: Will County, Illinois

Datum: NAVD 88
Elevation: 597.68 ft
North: 1761565.01 ft
East: 1033449.04 ft
Station: 499+92.91
Offset: 34.710 RT

Elevation (ft)	SOIL AND ROCK DESCRIPTION	Depth (ft)	Sample Type / recovery	Sample No.	SPT Values (blw/6 in)	Qu (tsf)	Moisture Content (%)
597.68	1-inch thick ASPHALT						
596.7	11-inch thick CONCRETE						
	--PAVEMENT--						
	Hard, brown SILTY CLAY LOAM, trace to little gravel; damp						
	--FILL--						
	--RDR 2--			1	7 8 12	> 4.50 P	11
		5		2	6 6 8	> 4.50 P	15
				3	4 5 9	> 4.50 P	14
589.7	Hard, black SILTY CLAY, trace gravel; damp						
	--Buried TOPSOIL--						
	--RDR 2--	10		4	4 5 6	5.00 B	22
587.2	Very stiff, brown and gray CLAY to SILTY CLAY, trace gravel; damp						
	--wet silt seam @ 12'--			5	2 3 3	2.46 B	23
	--RDR 2--						
584.7	Loose, gray SILTY LOAM; wet						
	--RDR 2--			6	0 2 2	1.50 P	26
583.2	Stiff, brown and gray CLAY to SILTY CLAY, trace gravel; damp	15					
	--RDR 2--			7	2 3 2	1.97 B	28
579.7	Medium dense, gray and brown SANDY GRAVEL; wet						
	--RDR 2--	20		8	3 6 10	NP	15

Elevation (ft)	SOIL AND ROCK DESCRIPTION	Depth (ft)	Sample Type / recovery	Sample No.	SPT Values (blw/6 in)	Qu (tsf)	Moisture Content (%)
577.2	Very stiff, gray SILTY CLAY LOAM to SILTY LOAM, little gravel; wet						
	--RDR 2-3--			9	12 9 17	2.50 P	13
		25		10	11 43 40	2.50 P	9
571.7	--AUGER REFUSAL @ 26'--						
	Boring terminated at 26.00 ft						
		30					
		35					
		40					

GENERAL NOTES

Begin Drilling: 01-27-2023 Complete Drilling: 01-27-2023
Drilling Contractor: Wang Testing Services Drill Rig: 20CME55T[81%]
Driller: KG&TC Logger: B. Miller Checked by: J. Bensen
Drilling Method: 3.25" IDA HSA; boring backfilled upon completion

WATER LEVEL DATA

While Drilling: 12.00 ft
At Completion of Drilling: 15.00 ft
Time After Drilling: NA
Depth to Water: NA

The stratification lines represent the approximate boundary between soil types; the actual transition may be gradual.

Wang Engineering
wangeng@wangeng.com
1145 N. Main Street
Lombard, IL 60148
Telephone: 630-953-9928
Fax: 630-953-9938

BORING LOG DMS1-02

WEI Job No.: 7901-15-01

Client: TranSystems Corporation
Project: I-80 Reconstruction (Houbolt Rd to Center St)
Location: Will County, Illinois

Datum: NAVD 88
Elevation: 593.52 ft
North: 1761527.53 ft
East: 1033479.67 ft
Station: 499+85.65
Offset: 82.565 RT

Elevation (ft)	SOIL AND ROCK DESCRIPTION	Depth (ft)	Sample Type / recovery	Sample No.	SPT Values (blw/6 in)	Qu (tsf)	Moisture Content (%)
592.9	7-inch thick, black and dark brown SILTY CLAY LOAM						
	--TOPSOIL--						
	Very stiff to hard, brown SILTY CLAY to SILTY CLAY LOAM, trace gravel						
	--RDR 2--			1	3 4 8	4.35 B	19
	--FILL--						
		5		2	3 6 7	> 4.50 P	15
587.0	--(2.75 P)--						
	Stiff, black SILTY CLAY			3	2 3 6	1.31 B	24
	--Buried TOPSOIL--						
585.5	Stiff, dark brown CLAY LOAM						
	--RDR 2--	10		4	2 2 2	1.25 P	20
583.0	Stiff to hard, brown SILTY CLAY to CLAY, trace gravel						
	--RDR 2--			5	3 5 10	4.51 B	20
		15		6	3 4 5	1.89 B	25
578.0	Medium dense to very dense, brown SANDY GRAVEL; saturated						
	--RDR 3-4--			7	5 11 17	NP	14
		20		8	4 12 12	NP	19

Elevation (ft)	SOIL AND ROCK DESCRIPTION	Depth (ft)	Sample Type / recovery	Sample No.	SPT Values (blw/6 in)	Qu (tsf)	Moisture Content (%)
572.0	--cobble fragments--			9	50/3	NP	10
	--AUGER REFUSAL--						
	Boring terminated at 21.50 ft						
		25					
		30					
		35					
		40					

GENERAL NOTES

Begin Drilling: 02-28-2023 Complete Drilling: 02-28-2023
Drilling Contractor: Wang Testing Services Drill Rig: 21GeoA[96%]
Driller: AG&EH Logger: F. Bozga Checked by: J. Bensen
Drilling Method: 2.25" IDA HSA; boring backfilled upon completion

WATER LEVEL DATA

While Drilling: 15.50 ft
At Completion of Drilling: 16.50 ft
Time After Drilling: NA
Depth to Water: NA

The stratification lines represent the approximate boundary between soil types; the actual transition may be gradual.

WANGENGINC 79011501.GPJ WANGENG.GDT 5/18/23

MODEL: Default
FILE NAME: pw://transystems-pw.bentley.com:transyscorp-pw1-hosted/Documents/Projects_2018/CH401/401180022/02-TranSystems/CAD/62R27/Sheets/22-ITS TS/D162R27-sht-ltsohs-012.dgn

exp.

USER NAME = RussellBr	DESIGNED - CS	REVISED -
	DRAWN - CS	REVISED -
PLOT SCALE = 31.9987 ' / in.	CHECKED - BAR	REVISED -
PLOT DATE = 6/15/2023	DATE -	REVISED -

STATE OF ILLINOIS
DEPARTMENT OF TRANSPORTATION

OVERHEAD SIGN STRUCTURES
BORING LOGS

SCALE: SHEET 12 OF 12 SHEETS STA. TO STA.

F.A.I. RTE.	SECTION	COUNTY	TOTAL SHEETS	SHEET NO.
I-80	FAI 80 21 STRUCTURE 6	WILL	898	511
		CONTRACT NO. 62R27		
		ILLINOIS FED. AID PROJECT		

Benchmark: Chiseled square on top easterly side of concrete foundation for the cantilevered highway sign over I-80, east of the gore at I-80 west bound and I-80 west bound on ramp, south side of ramp, north side of I-80, west of Houbolt; Elev.=591.589.

Existing Structure: S.N. 099-0301 and S.N. 099-0302. Built in 1994 and 1993 respectively as F.A.I. Rte. 80, Project HDP-9105(001), Section 99-2(K & HB-1-R) at Sta. 151+86.42. Existing dual structures each consist of a single-span reinf. concrete composite deck on steel plate girders supported by cast-in-place reinforced concrete integral abutments supported on steel piles. The bridge measures 148'-7" back to back abutments, 45'-2" out to out width with a skew of 14°-03'-57" skew. Deck to be removed and replaced.

Traffic Control: Traffic to be maintained using staged construction. The road shall remain open to at least two lanes of traffic in each direction at all times.

Salvage: None.

DESIGN SPECIFICATIONS

2002 Standard Specifications for Highway Bridges, 17th Edition

DESIGN STRESSES

FIELD UNITS (New Const.)	FIELD UNITS (Exist. Const.)
f'c = 3,500 psi	f'c = 3,500 psi
f'c = 4,000 psi (Superstructure)	fy = 60,000 psi (Reinforcement)
fy = 60,000 psi (Reinforcement)	fy = 36,000 psi (M270 Grade 36)
fy = 50,000 psi (M270 Grade 50)	
fy = 36,000 psi (M270 Grade 36)	

LOADING HS20-44 & ALT.

Allow 25#/sq. ft. for future wearing surface.

SEISMIC DATA

Seismic Performance Category (SPC) = A
Horizontal Bedrock Acceleration Coefficient (A) = 0.039g
Site Coefficient (S) = 1.0

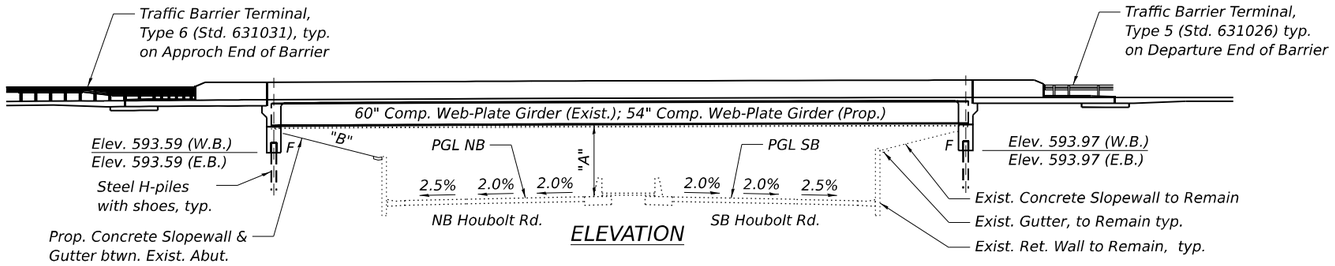

ELEVATION

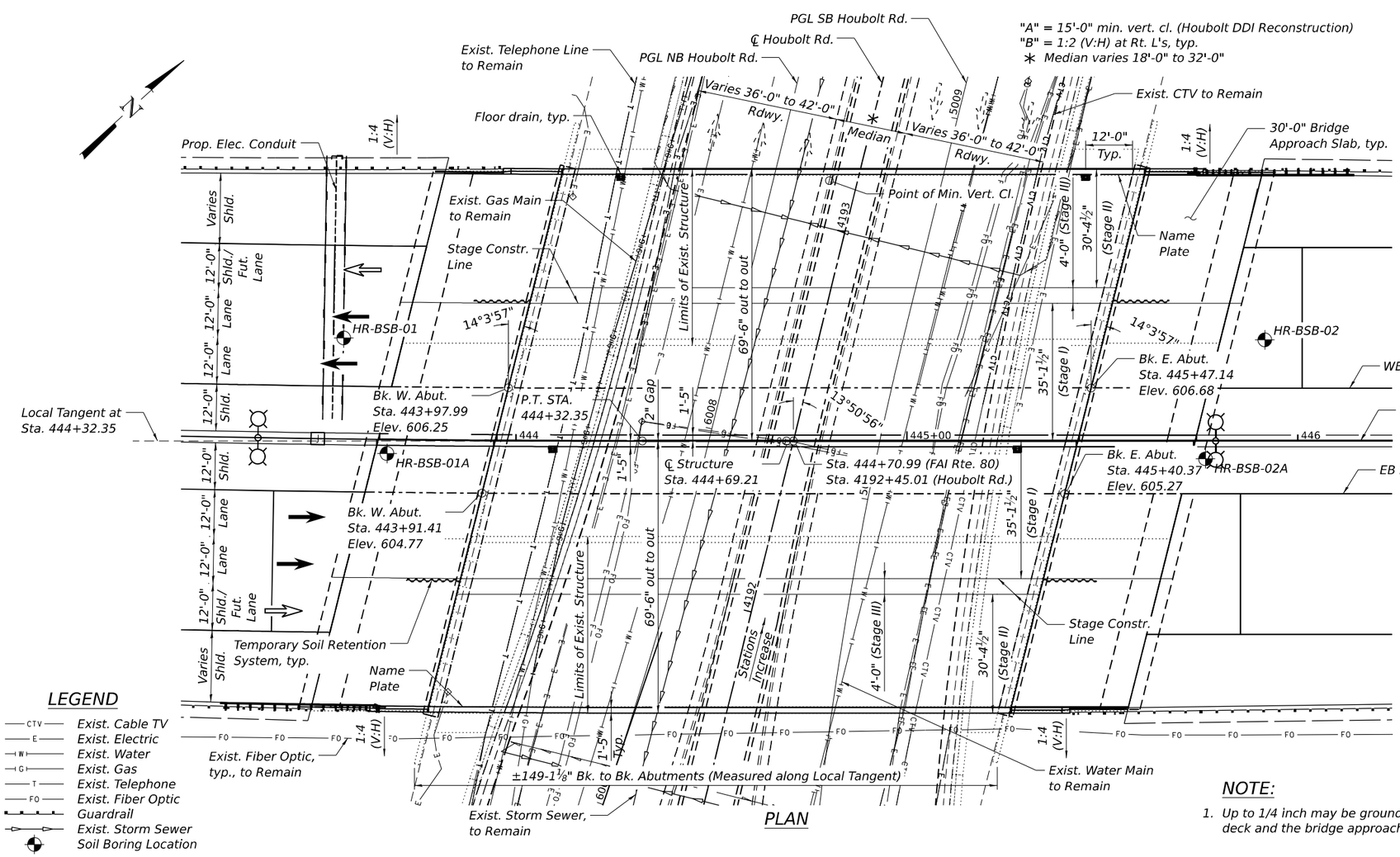

PLAN

LEGEND

- CTV — Exist. Cable TV
- E — Exist. Electric
- W — Exist. Water
- G — Exist. Gas
- T — Exist. Telephone
- FO — Exist. Fiber Optic
- Guardrail
- Exist. Storm Sewer
- Soil Boring Location

NOTE:

1. Up to 1/4 inch may be ground off the bridge deck and the bridge approach slabs.

APPROVED
For Structural Adequacy Only
Engineer of Bridges & Structures

STATE OF ILLINOIS
ANNA M. DUKES
081-005598
CHICAGO, ILLINOIS
LICENSED STRUCTURAL ENGINEER

ANNA M. DUKES, S.E.
NO. 081-005598
EXP. DATE 11/30/2024

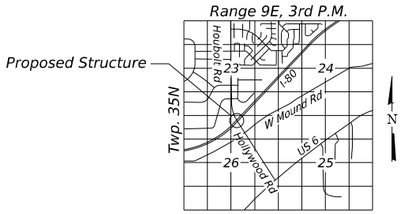

LOCATION SKETCH

GENERAL PLAN AND ELEVATION
I-80 OVER HOUBOLT ROAD
F.A.I. RTE. 80 - SEC. FAI 80 21 STRUCTURE 6
WILL COUNTY
STATION 444+69.21
S.N. 099-0301 (E.B.)
S.N. 099-0302 (W.B.)

MODEL: Drawing
FILE NAME: pw://transystems-pw.bentley.com:transyscorp-pw1-hosted/Documents/Projects_2018/CH401/401180022/02-TranSystems/CAD/62R27/Sheets/23-Structural/099-0301 & 099-0302/09900301-62R27-001-GPE.dgn

TRANSYSTEMS

USER NAME = amkluver	DESIGNED - TJA	REVISED -	
	CHECKED - AMD	REVISED -	
PLOT SCALE = NTS	DRAWN - TJA	REVISED -	
PLOT DATE = 6/23/2023	CHECKED - WJC	REVISED -	

STATE OF ILLINOIS
DEPARTMENT OF TRANSPORTATION

SHEET S1-01 OF S1-47 SHEETS

F.A.I. RTE.	SECTION	COUNTY	TOTAL SHEETS	SHEET NO.
I-80	FAI 80 21 STRUCTURE 6	WILL	898	512
		CONTRACT NO. 62R27		
		ILLINOIS	FED. AID PROJECT	

GENERAL NOTES

1. Fasteners shall be ASTM F 3125 Grade A325 Type 1, mechanically galvanized bolts. Bolts $^{7}/_{8}$ in. Φ holes $^{15}/_{16}$ in. Φ, unless otherwise noted.

2. Calculated weight of Structural Steel
   M270 Grade 50 = 543,650
   M270 Grade 36 = 27,280

3. No field welding is permitted except as specified in the contract documents.

4. Reinforcement bars designated (E) shall be epoxy coated.

5. Prior to pouring the new concrete deck, all heavy or loose rust, loose mill scale, and other loose detrimental foreign material shall be removed from the surfaces in contact with concrete (SSPC – SP3 standards). Tightly adhered paint may remain unless otherwise noted. Removal shall be accomplished by methods that will not damage the steel and the cost will be paid for according to Article 109.04 of the Standard Specifications.

   As directed by the Engineer, existing construction accessories welded to the top flange of beams and girders shall be removed. The weld areas shall be ground flush and inspected for cracks using magnetic particle testing (MT) or dye penetrant testing (PT) by qualified personnel approved by the Engineer. Any cracks that cannot be removed by grinding ¼ in. deep shall be identified and reported to the Bureau of Bridges & Structures for further disposition. The cost of removing welded accessories, grinding and inspecting weld areas and grinding cracks will be paid for according to Article 109.04 of the Standard Specifications.

6. Plan dimensions and details relative to existing plans are subject to nominal construction variations. The Contractor shall field verify existing dimensions and details affecting new construction and make necessary approved adjustments prior to construction or ordering of materials. Such variations shall not be cause for additional compensation for a change in scope of the work, however, the Contractor will be paid for the quantity actually furnished at the unit price bid for the work.

7. The Inorganic Zinc Rich Primer / Acrylic / Acrylic Paint System shall be used for shop and field painting of new structural steel except where otherwise noted. The color of the final finish coat for all interior steel surfaces shall be Gray, Munsell No. 5B 7/1. The color of the final finish coat for the exterior and bottom flange of the fascia beams shall be Gray, Munsell No. 5B 7/1.

8. Cleaning and painting of the existing structural steel shall be as specified in the special provisions for "Cleaning and Painting Existing Steel Structures". All beams, bearings, and other structural steel within 5 ft (measured along the beam) of either side of deck joints shall be cleaned per Near White Blast Cleaning (SSPC-SP10). The exterior surfaces and bottom of the bottom flange of the fascia beams shall be cleaned per Commercial Grade Power Tool Cleaning (SSPC-SP15).

   The designated areas cleaned per Near White Blast Cleaning (SSPC-SP10) and per Commercial Grade Power Tool Cleaning (SSPC-SP15) shall be painted according to the requirements of paint system OZ/E/U. The color of the final finish coat for all interior steel surfaces shall be Gray, Munsell No. 5B 7/1. The color of the final finish coat for the exterior and bottom flange of the fascia beams shall be Gray, Munsell No. 5B 7/1.

9. Containment of cleaning residue is required to control nuisance dust. See special provisions.

10. Slipforming of the interior parapets is not allowed.

INDEX OF SHEETS

TOTAL BILL OF MATERIAL

Item	Unit	Super.	Sub.	Total
Slope Wall Removal	Sq. Yd	-	252	252
Removal Of Existing Concrete Deck No. 1	Each	1	-	1
Removal Of Existing Concrete Deck No. 2	Each	1	-	1
Concrete Removal	Cu. Yd.	-	130.5	130.5
Protective Shield	Sq. Yd.	1,201	-	1,201
Structure Excavation	Cu. Yd.	-	699.6	699.6
Floor Drains	Each	4	-	4
Concrete Structures	Cu. Yd.	-	166.7	166.7
Concrete Superstructure	Cu. Yd.	936.3	-	936.3
Protective Coat	Sq. Yd.	3,545	-	3,545
Concrete Superstructure (Approach Slab)	Cu. Yd.	390.4	-	390.4
Furnishing And Erecting Structural Steel	L. Sum	1	-	1
Stud Shear Connectors	Each	1,920	-	1,920
Reinforcement Bars, Epoxy Coated	Pound	314,420	30,710	345,130
Bar Splicers	Each	2,096	160	2,256
Mechanical Splicers	Each	48	-	48
Slope Wall 4 Inch	Sq. Yd.	-	222	222
Furnishing Steel Piles HP14X73	Foot	-	962	962
Driving Piles	Foot	-	962	962
Test Pile Steel HP14X73	Each	-	2	2
Pile Shoes	Each	-	28	28
Name Plates	Each	2	-	2
Preformed Joint Seal 3 1/2"	Foot	210	-	210
Anchor Bolts, 1"	Each	32	-	32
Temporary Soil Retention System	Sq. Ft.	-	740	740
Granular Backfill For Structures	Cu. Yd.	-	856.9	856.9
Geocomposite Wall Drain	Sq. Yd.	-	350	350
Concrete Headwalls For Pipe Drains	Each	-	4	4
Pipe Underdrains For Structures 4"	Foot	-	344	344
Pipe Underdrains For Structures (Special) 4"	Foot	-	160	160
Bridge Deck Grooving (Longitudinal)	Sq. Yd.	1,674	-	1,674
Containment And Disposal Of Non-Lead Paint Cleaning Residues No. 1	L. Sum	1	-	1
Containment And Disposal Of Non-Lead Paint Cleaning Residues No. 2	L. Sum	1	-	1
Structural Steel Removal	L. Sum	1	-	1
Cleaning And Painting Steel Bridge No. 1	L. Sum	1	-	1
Cleaning And Painting Steel Bridge No. 2	L. Sum	1	-	1
Diamond Grinding (Bridge Section)	Sq. Yd.	3,226	-	3,226

SCOPE OF WORK

1. Remove existing lighting, bridge deck, & end diaphragms.
2. Widen existing substructure to accomodate additional future traffic lanes.
3. Erect new 54" Web-Plate Girders.
4. Pour new deck & end diaphragms.
5. Install new underpass lighting.

STATION 444+69.21
RE-BUILT 20__ BY
STATE OF ILLINOIS
F.A.I. RT. 80
SEC. FAI 80 21 STRUCTURE 6
LOADING HS20-44 & ALT
STRUCTURE NO. 099-0301

NAME PLATE (EB)

See Std. 515001

STATION 444+69.21
RE-BUILT 20__ BY
STATE OF ILLINOIS
F.A.I. RT. 80
SEC. FAI 80 21 STRUCTURE 6
LOADING HS20-44 & ALT
STRUCTURE NO. 099-0302

NAME PLATE (WB)

See Std. 515001

Existing Name Plate shall be cleaned and relocated next to new Name Plate. Cost included with Name Plates.

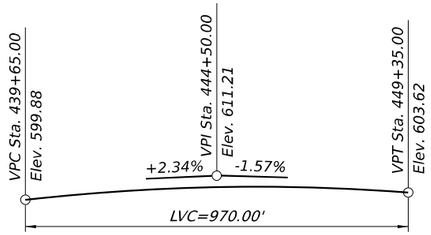

WB I-80 PROFILE GRADE

(The Profile Grade shows the final elevations after grinding)

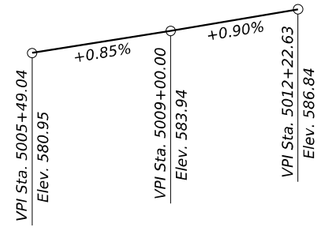

EXIST. PROFILE GRADE SB HOUBOLT ROAD

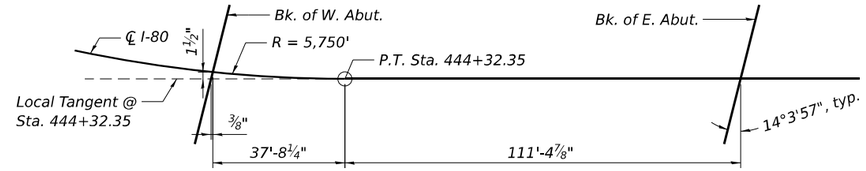

OFFSET SKETCH

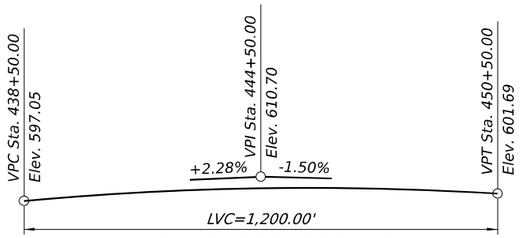

EB I-80 PROFILE GRADE

(The Profile Grade shows the final elevations after grinding)

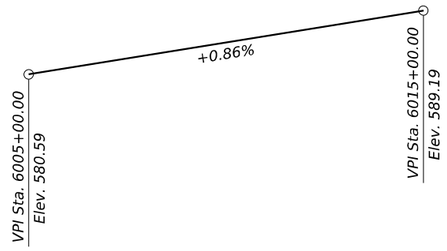

EXIST. PROFILE GRADE NB HOUBOLT ROAD

CURVE DATA

PROP. CURVE BL_PR_I80_W_1
P.I. STA. = 442+52.00
Δ = 46° 06' 50" (LT)
D = 0° 59' 47"
R = 5,750.00'
T = 2,447.48'
L = 4,627.83'
E = 499.21'
e = -3.40%
T.R. = 107'
S.E. RUN = 255'
P.C. STA. = 398+04.52
P.T. STA. = 444+32.35

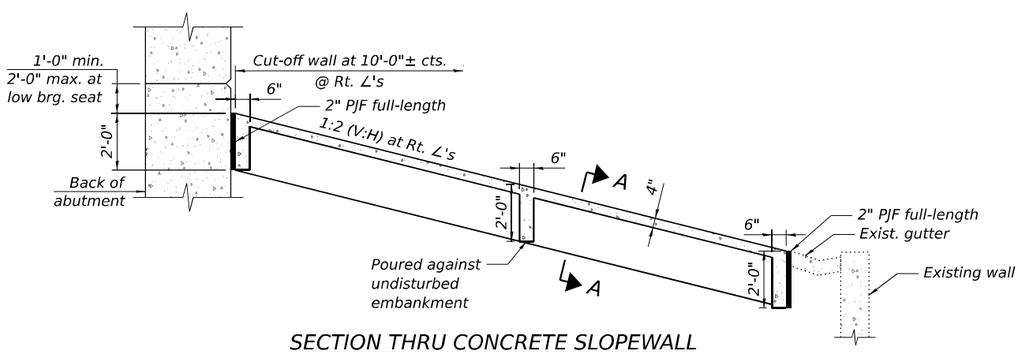

SECTION THRU CONCRETE SLOPEWALL

(Cost of PJF included with Concrete Slopewall)

Slope wall shall be reinforced with welded wire fabric, 6 in. x 6 in. W4.0 x W4.0, weighing 58 lbs. per 100 sq. ft.

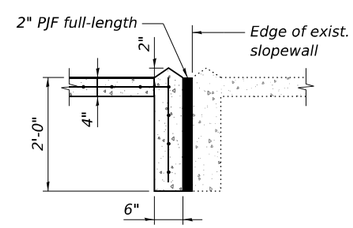

SECTION A-A

Verify as-built slopewall in the field.

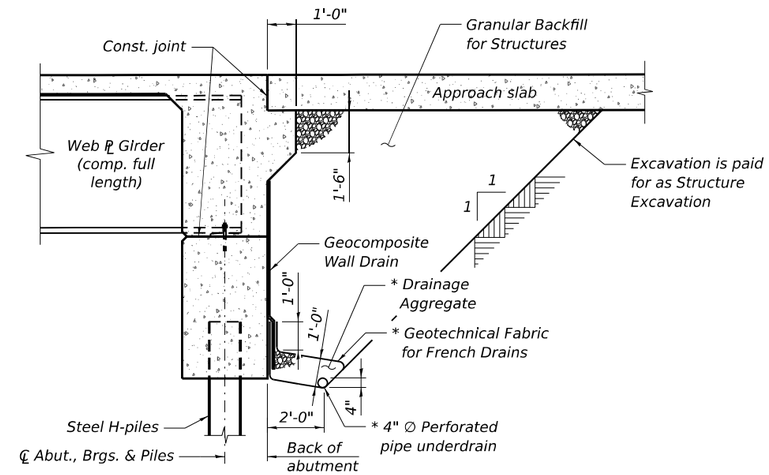

SECTION THRU INTEGRAL ABUTMENT

(Horiz. dim. @ Rt. ∠'s)
* Included in the cost of Pipe Underdrains for Structures 4"

Note:
All Drainage system components shall extend to 2'-0" from the end of each wingwall except on outlet pipe shall extend until intersection with the side slopes. The pipes shall drain into concrete headwalls. (See Article 601.05 of the Standard Specifications and Highway Standard 601101).

MODEL: Drawing
FILE NAME: pw://transystems-pw.bentley.com:transyscorp-pw1-hosted/Documents/Projects_2018/CH401/401180022/02-TranSystems/CAD/62R27/Sheets/23-Structural/099-0301 & 099-0302/0990301-62R27-003-GenData2.dgn

TRANSYSTEMS	USER NAME = amkluver	DESIGNED - TJA	REVISED -	STATE OF ILLINOIS DEPARTMENT OF TRANSPORTATION	GENERAL DATA 2 STRUCTURE NOS. 099-0301 (EB) & 099-0302 (WB)	F.A.I. RTE.	SECTION	COUNTY	TOTAL SHEETS / SHEET NO.
		CHECKED - AMD	REVISED -			I-80	FAI 80 21 STRUCTURE 6	WILL	898 / 514
	PLOT SCALE = NTS	DRAWN - TJA	REVISED -					CONTRACT NO. 62R27	
	PLOT DATE = 6/23/2023	CHECKED - WJC	REVISED -		SHEET S1-03 OF S1-47 SHEETS		ILLINOIS	FED. AID PROJECT	

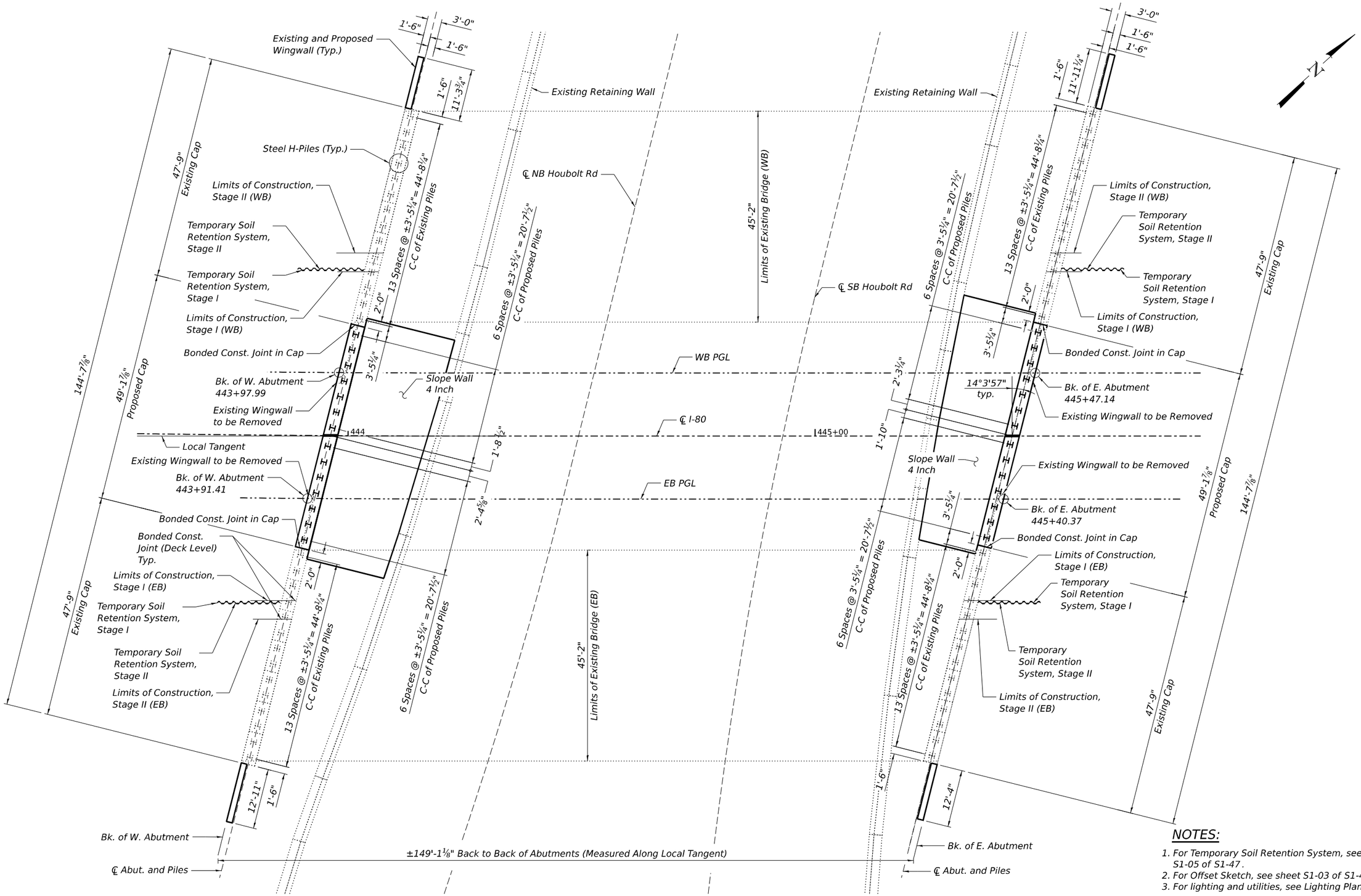

NOTES:

1. For Temporary Soil Retention System, see sheet S1-05 of S1-47.
2. For Offset Sketch, see sheet S1-03 of S1-47.
3. For lighting and utilities, see Lighting Plans.

MODEL: Drawing Views
FILE NAME: pw://transystems-pw.bentley.com:transyscorp-pw1-hosted/Documents/Projects_2018/CH401/401180022/02-TranSystems/CAD/62R27/Sheets/23-Structural/099-0301 & 099-0302/0990301-62R27-004-FoundationLayout.dgn

TRANSYSTEMS

USER NAME = amkluver	DESIGNED - TJA	REVISED -	
	CHECKED - AMD	REVISED -	
PLOT SCALE = NTS	DRAWN - SN	REVISED -	
PLOT DATE = 6/23/2023	CHECKED - AMD	REVISED -	

STATE OF ILLINOIS
DEPARTMENT OF TRANSPORTATION

FOUNDATION LAYOUT
STRUCTURE NOS. 099-0301 (EB) & 099-0302 (WB)

SHEET S1-04 OF S1-47 SHEETS

F.A.I. RTE.	SECTION	COUNTY	TOTAL SHEETS	SHEET NO.
I-80	FAI 80 21 STRUCTURE 6	WILL	898	515

CONTRACT NO. 62R27

ILLINOIS | FED. AID PROJECT

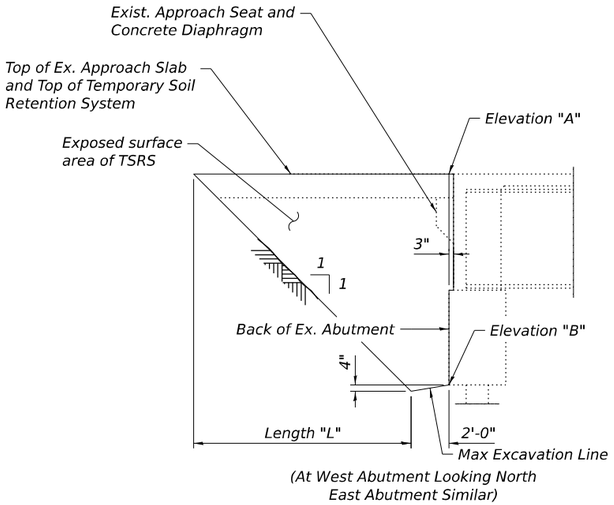

(At West Abutment Looking North
East Abutment Similar)

STAGE I TSRS

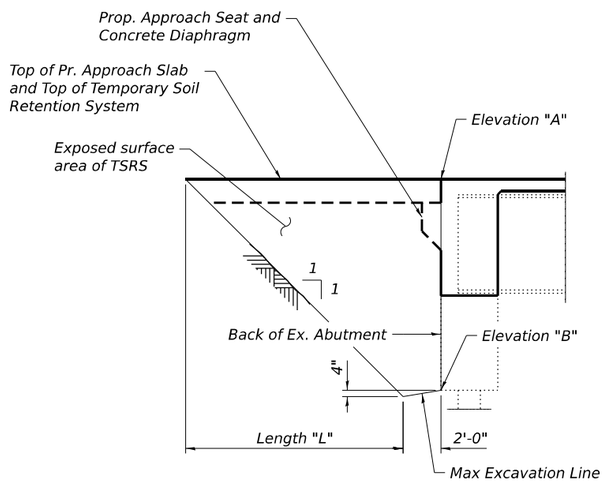

STAGE II TSRS

(At West Abutment Looking North
East Abutment Similar)

Location	Stage	"A"	"B"	"L"
Westbound West Abutment	Stage I	605.24	593.59	12'-0"
	Stage II	605.52	593.59	12'-4"
Westbound East Abutment	Stage I	605.64	593.97	12'-1"
	Stage II	605.92	593.97	12'-4"
Eastbound West Abutment	Stage I	604.91	593.59	11'-8"
	Stage II	605.44	593.59	12'-3"
Eastbound East Abutment	Stage I	605.44	593.97	11'-9"
	Stage II	605.97	593.97	12'-3"

Note:
A cantilevered sheet piling design does not appear feasible and additional members or other retention systems may be necessary. The Contractor shall submit a temporary soil retention system design including plan details and calculations for review and acceptance by the Engineer.

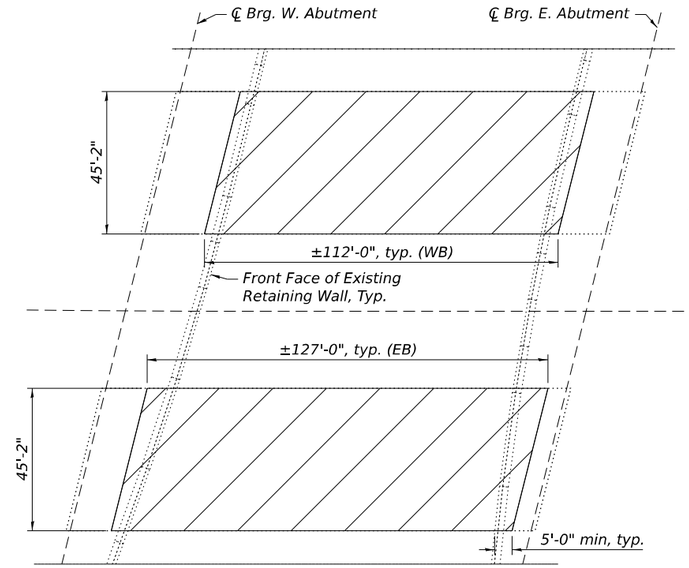

PROTECTIVE SHIELD LIMITS

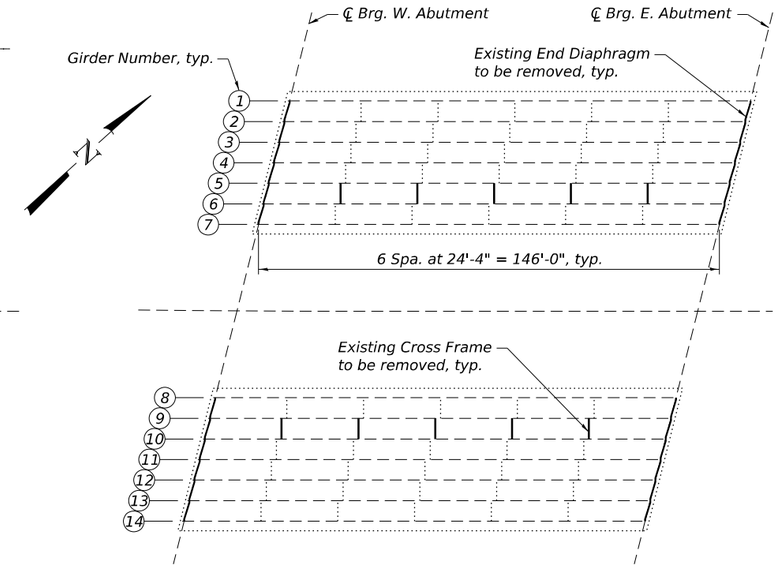

STRUCTURAL STEEL REMOVAL - KEY PLAN

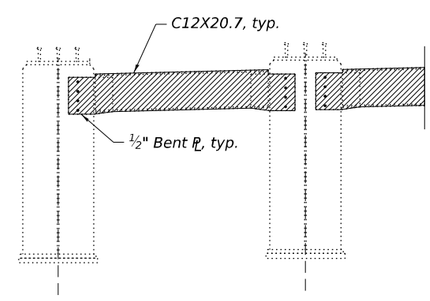

EXISTING END DIAPHRAGM REMOVAL

24 Required

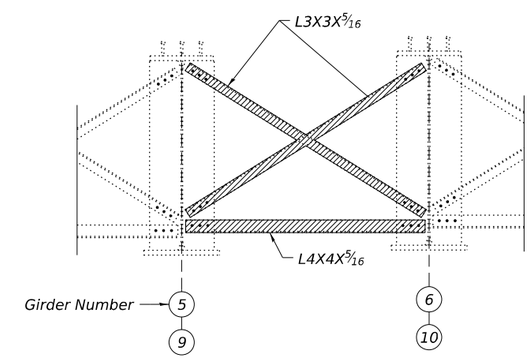

Structural Steel Removal
(See Special Provisions)

EXISTING CROSS FRAME REMOVAL

10 Required
(Looking East)

BILL OF MATERIAL

(For Information Only)

Item	Unit	Total
Structural Steel Removal	Pounds	3,780

MODEL: Drawing View
FILE NAME: pw://transystems-pw.bentley.com:transyscorp-pw1-hosted/Documents/Projects_2018/CH401/401180022/02-TranSystems/CAD/62R27/Sheets/23-Structural/099-0301 & 099-0302/09900301-62R27-005-ExRemovalTSRS.dgn

TRANSYSTEMS

USER NAME = amkluver	DESIGNED - TJA	REVISED -	
	CHECKED - AMD	REVISED -	
PLOT SCALE = NTS	DRAWN - TJA	REVISED -	
PLOT DATE = 7/27/2023	CHECKED - AMD	REVISED -	

STATE OF ILLINOIS
DEPARTMENT OF TRANSPORTATION

REMOVAL DETAILS AND TSRS
STRUCTURE NOS. 099-0301 (EB) & 099-0302 (WB)

SHEET S1-05 OF S1-47 SHEETS

F.A.I. RTE.	SECTION	COUNTY	TOTAL SHEETS	SHEET NO.
I-80	FAI 80 21 STRUCTURE 6	WILL	898	516

CONTRACT NO. 62R27

ILLINOIS FED. AID PROJECT

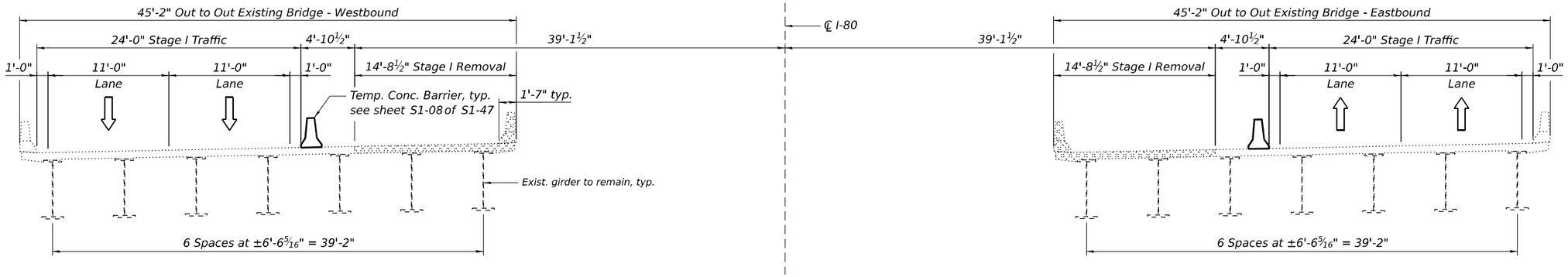

STAGE I REMOVAL

(Looking East)

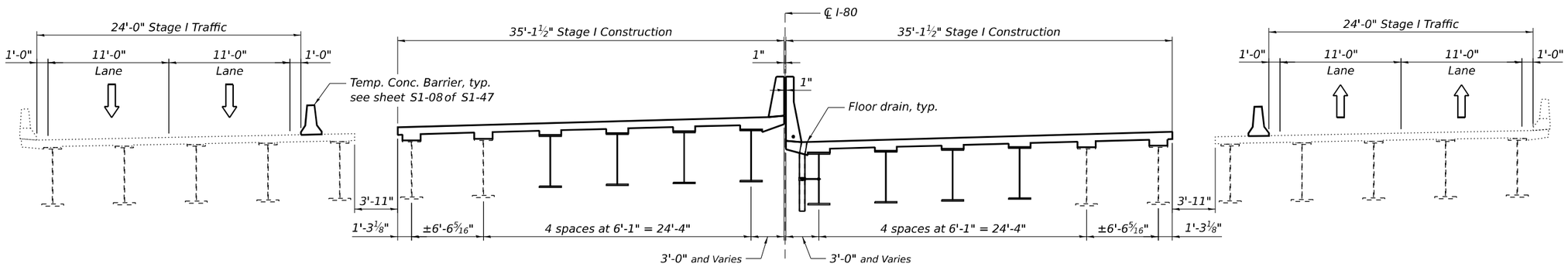

STAGE I CONSTRUCTION

(Looking East)

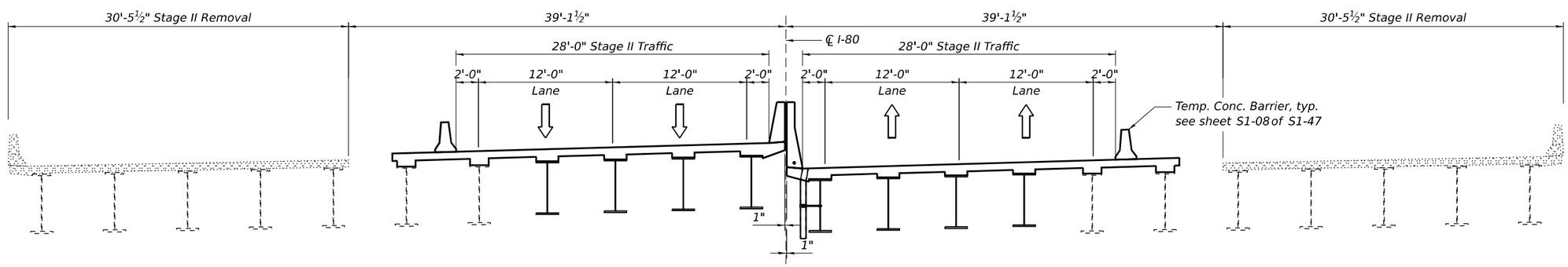

STAGE II REMOVAL

(Looking East)

Notes:
For quantity of concrete barriers, see Rdwy Plans.
Hatched area indicates Removal of Existing Concrete Deck No. 1 or No. 2.

MODEL: Drawing
FILE NAME: pw://transystems-pw.bentley.com:transyscorp-pw1-hosted/Documents/Projects_2018/CH401/401180022/02-TranSystems/CAD/62R27/Sheets/23-Structural/099-0301 & 099-0302/09900301-62R27-006-StagingDetails1.dgn

TRANSYSTEMS

USER NAME = amkluver	DESIGNED - BMJ	REVISED -	
	CHECKED - AMD	REVISED -	
PLOT SCALE = NTS	DRAWN - TJA	REVISED -	
PLOT DATE = 7/27/2023	CHECKED - AMD	REVISED -	

STATE OF ILLINOIS
DEPARTMENT OF TRANSPORTATION

CONSTRUCTION STAGING DETAILS 1
STRUCTURE NOS. 099-0301 (EB) & 099-0302 (WB)

SHEET S1-06 OF S1-47 SHEETS

F.A.I. RTE.	SECTION	COUNTY	TOTAL SHEETS	SHEET NO.
I-80	FAI 80 21 STRUCTURE 6	WILL	898	517
		CONTRACT NO. 62R27		
		ILLINOIS	FED. AID PROJECT	

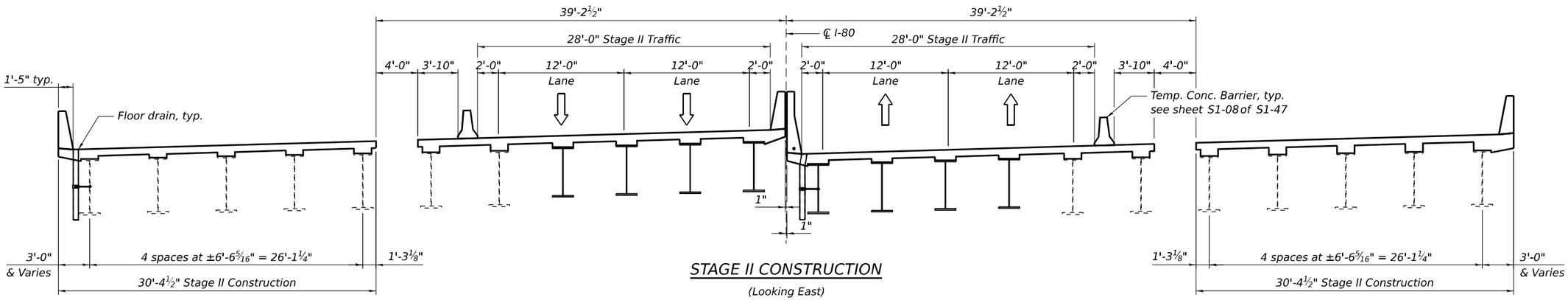

STAGE II CONSTRUCTION

(Looking East)

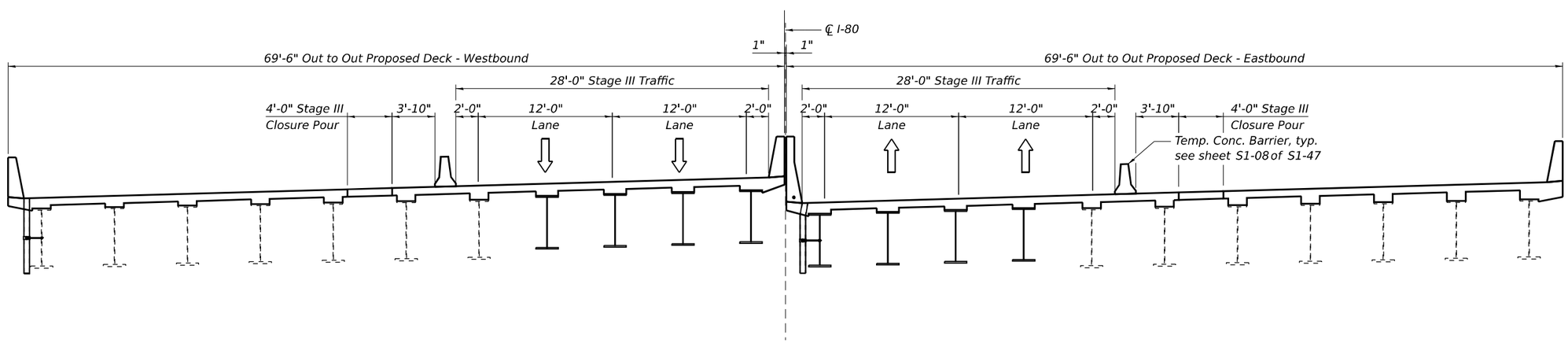

STAGE III CONSTRUCTION

(Looking East)

Notes:
For quantity of concrete barriers, see Rdwy Plans.

MODEL: Drawing
FILE NAME: pw://transystems-pw.bentley.com:transyscorp-pw1-hosted/Documents/Projects_2018/CH401/401180022/02-TranSystems/CAD/62R27/Sheets/23-Structural/099-0301 & 099-0302/09900301-62R27-007-StagingDetails2.dgn

TRANSYSTEMS	USER NAME = amkluver	DESIGNED - BMJ	REVISED -	STATE OF ILLINOIS DEPARTMENT OF TRANSPORTATION
		CHECKED - AMD	REVISED -	
	PLOT SCALE = NTS	DRAWN - BMJ	REVISED -	
	PLOT DATE = 6/23/2023	CHECKED - AMD	REVISED -	

CONSTRUCTION STAGING DETAILS 2
STRUCTURE NOS. 099-0301 (EB) & 099-0302 (WB)

SHEET S1-07 OF S1-47 SHEETS

F.A.I. RTE.	SECTION	COUNTY	TOTAL SHEETS	SHEET NO.
I-80	FAI 80 21 STRUCTURE 6	WILL	898	518
		CONTRACT NO. 62R27		
	ILLINOIS	FED. AID PROJECT		

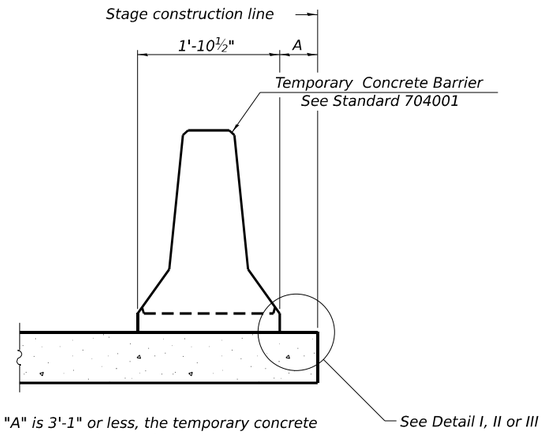

When "A" is 3'-1" or less, the temporary concrete barrier shall be restrained to the new slab according to Detail I, II or III. No restraint is required when "A" is greater than 3'-1".

NEW SLAB OR NEW DECK BEAM

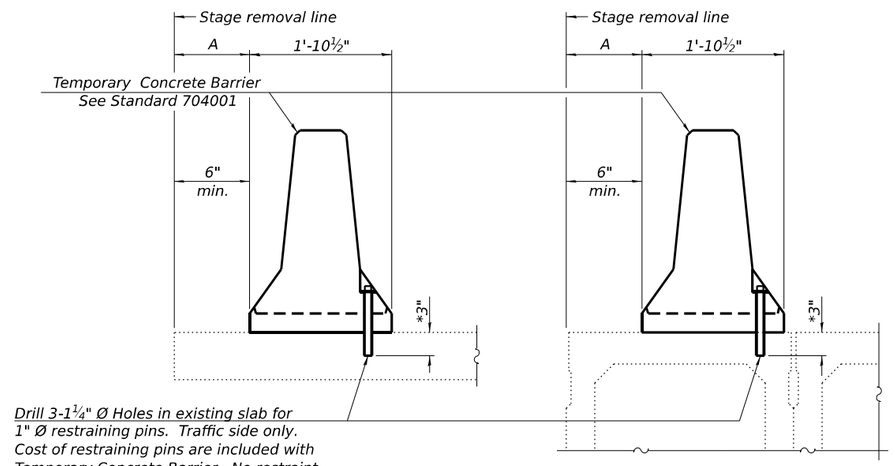

EXISTING SLAB

EXISTING DECK BEAM

SECTIONS THRU SLAB OR DECK BEAM

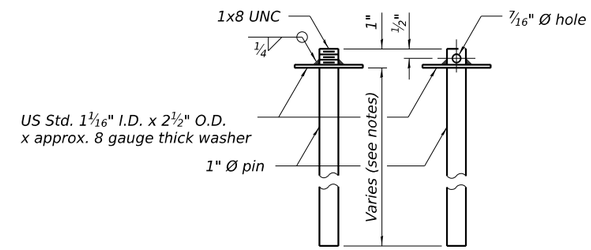

RESTRAINING PIN

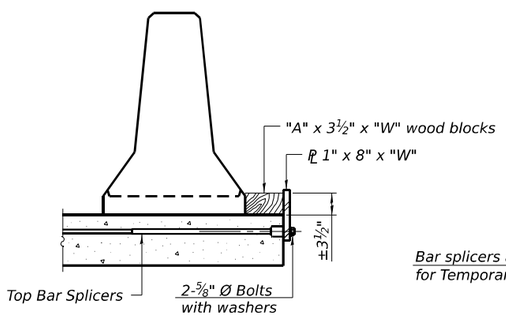

DETAIL I

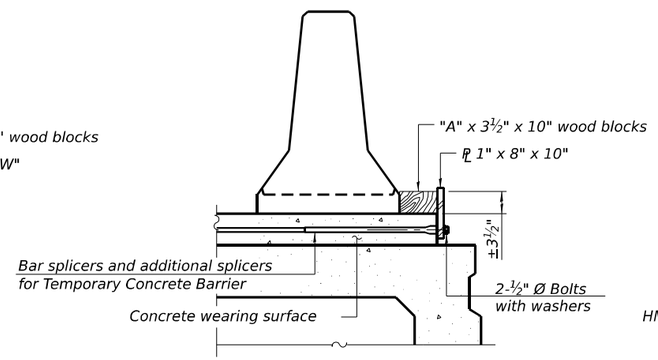

DETAIL II

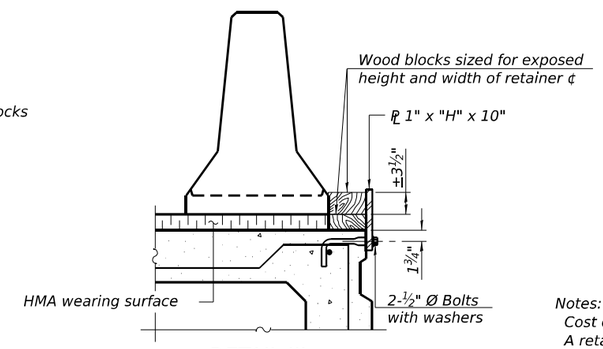

DETAIL III

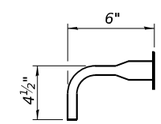

BAR SPLICER FOR #4 BAR - DETAIL III

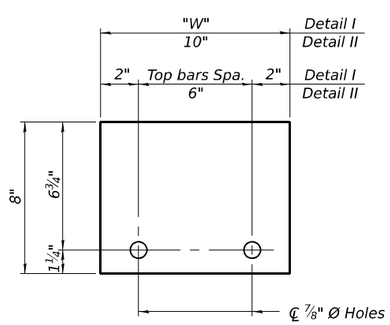

STEEL RETAINER ¢ 1" x 8" x "W"

(Detail I and II)

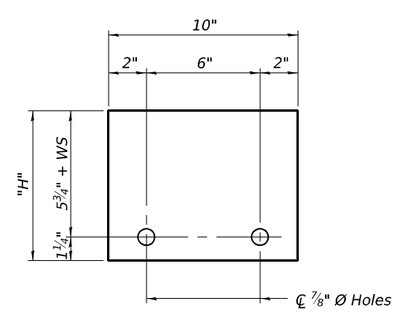

STEEL RETAINER ¢ 1" x "H" x 10"

(Detail III)

Notes:

Cost of retainer assembly is included with Temporary Concrete Barrier.

A retainer assembly shall be located at the approximate ¡ of each temporary concrete barrier.

The retainer plate shall not be removed until the concrete on the adjacent stage is ready to be poured. For Detail III applications the retainer plate shall not be removed until just prior to placing the adjacent beam.

When the 'A' dimension is less than 1½", the wood block shall be omitted and the barrier shall be placed in direct contact with the steel retainer plate. For deck beam applications the minimum required 'A' distance is 6" to accommodate the shear key clamping device.

Detail I - Installation for a new bridge deck or bridge slab.

Detail II - Installation for a new deck beam with an initial concrete wearing surface. Additional bar splicers shall be provided at 6'-0" centers and paired with the bar splicers of the concrete wearing surface reinforcement to accommodate the installation of the retainer assemblies. The cost of the additional bar splicers is included with the concrete wearing surface.

Detail III - Installation for a new deck beam with no initial wearing surface or with an initial hot-mix asphalt (HMA) wearing surface present. The deck beam directly beneath the temporary concrete barrier shall be fabricated with bar splicer inserts in the side of the beam, as detailed, to accommodate the installation of the retainer assemblies. A pair of bar splicers, 6" apart, shall be placed at 6'-0" centers along the length of the beam. The cost of the bar splicers is included with the deck beam.

RAILING CRITERIA

NCHRP 350 Test Level	3
Railing Weight (plf)	440

R-27

10-12-2021

MODEL: Untitled
FILE NAME: pw://transystems-pw.bentley.com:transyscorp-pw1-hosted/Documents/Projects_2018/CH401/401180022/02-TranSystems/CAD/62R27/Sheets/23-Structural/099-0301 & 099-0302/0990301-62R27-008-TCB.dgn

TRANSYSTEMS

USER NAME = amkluver	DESIGNED - TJA	REVISED -	
	CHECKED - AMD	REVISED -	
PLOT SCALE = NTS	DRAWN - CMD	REVISED -	
PLOT DATE = 6/23/2023	CHECKED - AMD	REVISED -	

STATE OF ILLINOIS
DEPARTMENT OF TRANSPORTATION

TEMPORARY CONCRETE BARRIER
STRUCTURE NOS. 099-0301 (EB) & 099-0302 (WB)

SHEET S1-08 OF S1-47 SHEETS

F.A.I. RTE.	SECTION	COUNTY	TOTAL SHEETS	SHEET NO.
I-80	FAI 80 21 STRUCTURE 6	WILL	898	519
		CONTRACT NO. 62R27		
		ILLINOIS FED. AID PROJECT		

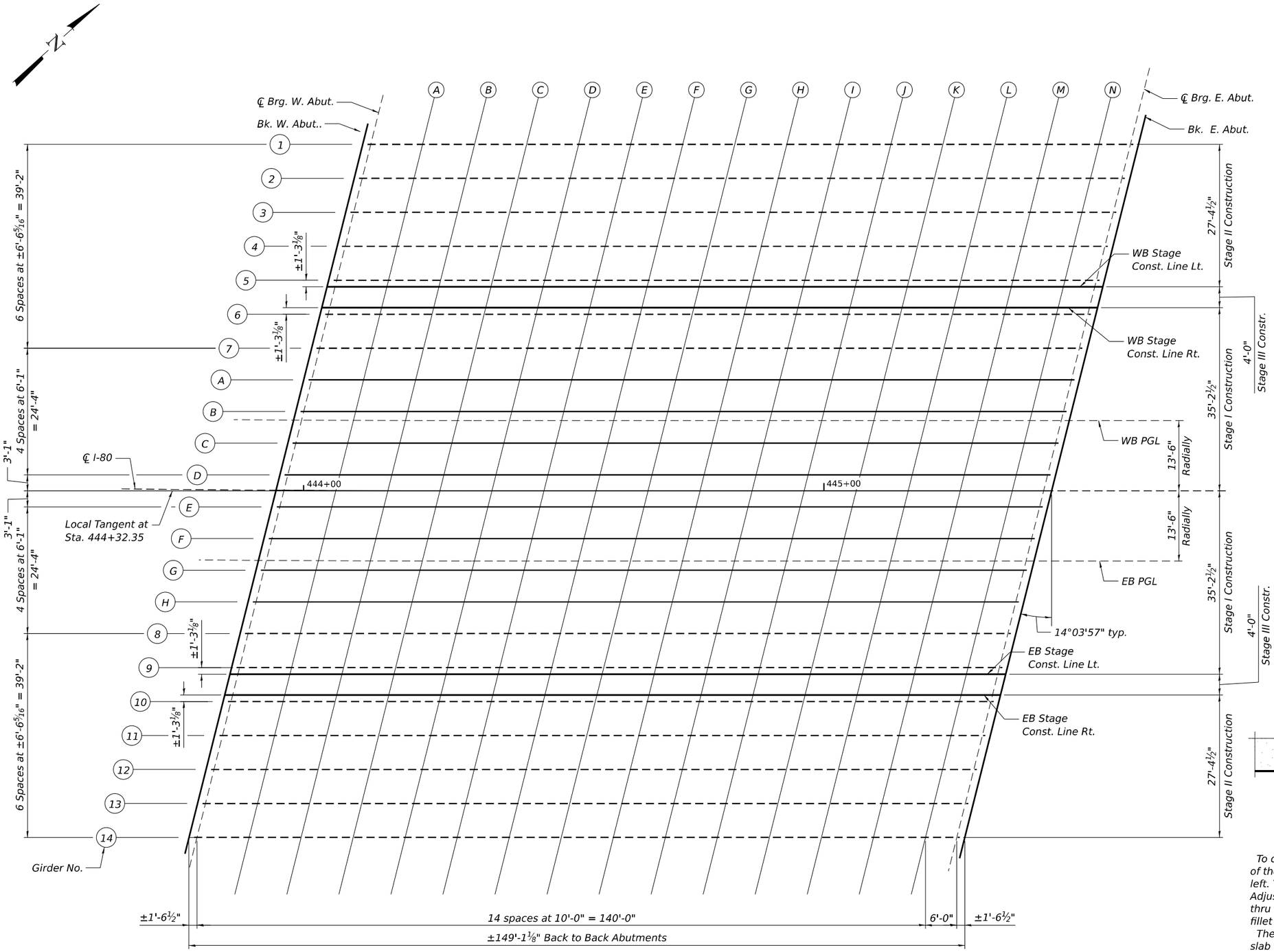

PLAN

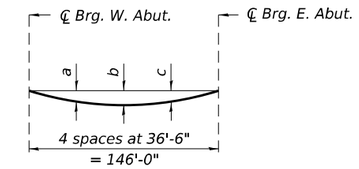

DEAD LOAD DEFLECTION DIAGRAM

(Includes weight of concrete only.)

Note:
The above deflections are not to be used in the field if the engineer is working from the grade elevations adjusted for dead load deflections and grinding as shown on sheets S1-10 thru S1-14 of S1-47

DEAD LOAD DEFLECTION TABLE

Girder No.	a	b	c
1	2 1/2"	3 3/8"	2 1/2"
2	2 1/2"	3 3/8"	2 1/2"
3	2 1/2"	3 1/2"	2 1/2"
4	2 5/8"	3 1/2"	2 5/8"
5	2 1/2"	3 3/8"	2 1/2"
6	2 1/2"	3 1/2"	2 1/2"
7	2 5/8"	3 5/8"	2 5/8"
A	2 1/8"	2 7/8"	2 1/8"
B	2 1/8"	2 7/8"	2 1/8"
C	2 1/8"	2 7/8"	2 1/8"
D	2 1/8"	3"	2 1/8"
E	2 1/8"	3"	2 1/8"
F	2 1/8"	2 7/8"	2 1/8"
G	2 1/8"	2 7/8"	2 1/8"
H	2 1/8"	2 7/8"	2 1/8"
8	2 5/8"	3 5/8"	2 5/8"
9	2 5/8"	3 5/8"	2 5/8"
10	2 5/8"	3 5/8"	2 5/8"
11	2 7/8"	3 7/8"	2 7/8"
12	2 7/8"	3 7/8"	2 7/8"
13	2 7/8"	4"	2 7/8"
14	3 1/4"	4 3/8"	3 1/4"

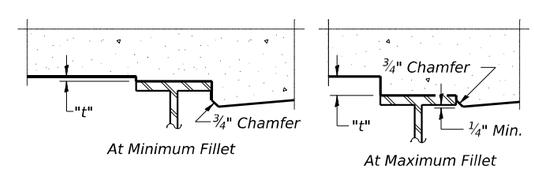

To determine "t": After all structural steel has been erected, elevations of the top flanges of the beams shall be taken at intervals shown to the left. These elevations subtracted from the "Theoretical Grade Elevations Adjusted for Dead Load Deflection and Grinding" shown on Sheets S1-10 thru S1-14 of S1-47, minus slab thickness, prior to grinding equals the fillet heights "t" above top flange of beams.

The slab is to be ground after curing to achieve smoothness, but the slab is not to be ground to elevation below the "Theoretical Grade Elevations" shown on sheets S1-10 thru S1-14 of S1-47. For grinding the deck, see Special Provisions.

FILLET HEIGHTS

TRANSYSTEMS

USER NAME = amkluver	DESIGNED - TJA	REVISED -	
	CHECKED - SN	REVISED -	
PLOT SCALE = NTS	DRAWN - TJA	REVISED -	
PLOT DATE = 6/23/2023	CHECKED - WJC	REVISED -	

STATE OF ILLINOIS
DEPARTMENT OF TRANSPORTATION

TOP OF DECK ELEVATIONS 1
STRUCTURE NOS. 099-0301 (EB) & 099-0302 (WB)

SHEET S1-09 OF S1-47 SHEETS

F.A.I. RTE.	SECTION	COUNTY	TOTAL SHEETS	SHEET NO.
I-80	FAI 80 21 STRUCTURE 6	WILL	898	520
		CONTRACT NO. 62R27		
		ILLINOIS FED. AID PROJECT		

GIRDER 1

Location	Station	Offset	Theoretical Grade Elevations	Theoretical Grade Elevations Adjusted For Dead Load Deflection and Grinding
Bk. W. Abut.	444+11.10	-66.54	604.80	604.82
℄ Brg. W. Abut.	444+12.67	-66.55	604.81	604.83
A	444+22.78	-66.58	604.86	604.95
B	444+32.89	-66.58	604.91	605.05
C	444+42.89	-66.58	604.95	605.15
D	444+52.89	-66.58	604.99	605.23
E	444+62.89	-66.58	605.02	605.30
F	444+72.89	-66.58	605.06	605.35
G	444+82.89	-66.58	605.08	605.39
H	444+92.89	-66.58	605.11	605.41
I	445+02.89	-66.58	605.13	605.41
J	445+12.89	-66.58	605.14	605.40
K	445+22.89	-66.58	605.15	605.38
L	445+32.89	-66.58	605.16	605.34
M	445+42.89	-66.58	605.16	605.29
N	445+52.89	-66.58	605.16	605.22
℄ Brg. E. Abut.	445+58.89	-66.58	605.16	605.18
Bk. E. Abut.	445+60.44	-66.58	605.16	605.18

GIRDER 2

Location	Station	Offset	Theoretical Grade Elevations	Theoretical Grade Elevations Adjusted For Dead Load Deflection and Grinding
Bk. W. Abut.	444+09.47	-60.01	604.97	605.00
℄ Brg. W. Abut.	444+11.04	-60.02	604.98	605.00
A	444+21.14	-60.04	605.03	605.12
B	444+31.25	-60.06	605.08	605.23
C	444+41.24	-60.06	605.13	605.33
D	444+51.24	-60.06	605.17	605.41
E	444+61.24	-60.06	605.20	605.48
F	444+71.24	-60.06	605.24	605.53
G	444+81.24	-60.06	605.26	605.57
H	444+91.24	-60.06	605.29	605.59
I	445+01.24	-60.06	605.31	605.59
J	445+11.24	-60.06	605.32	605.59
K	445+21.24	-60.06	605.33	605.56
L	445+31.24	-60.06	605.34	605.52
M	445+41.24	-60.06	605.35	605.47
N	445+51.24	-60.06	605.35	605.41
℄ Brg. E. Abut.	445+57.24	-60.06	605.34	605.37
Bk. E. Abut.	445+58.79	-60.06	605.34	605.36

GIRDER 3

Location	Station	Offset	Theoretical Grade Elevations	Theoretical Grade Elevations Adjusted For Dead Load Deflection and Grinding
Bk. W. Abut.	444+07.85	-53.48	605.15	605.17
℄ Brg. W. Abut.	444+09.41	-53.48	605.16	605.18
A	444+19.50	-53.51	605.21	605.30
B	444+29.60	-53.53	605.26	605.41
C	444+39.62	-53.53	605.31	605.51
D	444+49.62	-53.53	605.35	605.59
E	444+59.62	-53.53	605.38	605.66
F	444+69.62	-53.53	605.42	605.71
G	444+79.62	-53.53	605.44	605.75
H	444+89.62	-53.53	605.47	605.77
I	444+99.62	-53.53	605.49	605.78
J	445+09.62	-53.53	605.51	605.77
K	445+19.62	-53.53	605.52	605.75
L	445+29.62	-53.53	605.53	605.71
M	445+39.62	-53.53	605.53	605.66
N	445+49.62	-53.53	605.53	605.59
℄ Brg. E. Abut.	445+55.62	-53.53	605.53	605.55
Bk. E. Abut.	445+57.17	-53.53	605.53	605.55

GIRDER 4

Location	Station	Offset	Theoretical Grade Elevations	Theoretical Grade Elevations Adjusted For Dead Load Deflection and Grinding
Bk. W. Abut.	444+06.23	-46.94	605.33	605.35
℄ Brg. W. Abut.	444+07.79	-46.95	605.34	605.36
A	444+17.87	-46.98	605.39	605.48
B	444+27.95	-47.00	605.44	605.59
C	444+37.99	-47.00	605.48	605.69
D	444+47.99	-47.00	605.52	605.77
E	444+57.99	-47.00	605.56	605.84
F	444+67.99	-47.00	605.59	605.90
G	444+77.99	-47.00	605.62	605.94
H	444+87.99	-47.00	605.65	605.96
I	444+97.99	-47.00	605.67	605.97
J	445+07.99	-47.00	605.69	605.96
K	445+17.99	-47.00	605.70	605.94
L	445+27.99	-47.00	605.71	605.90
M	445+37.99	-47.00	605.72	605.84
N	445+47.99	-47.00	605.72	605.78
℄ Brg. E. Abut.	445+53.99	-47.00	605.72	605.74
Bk. E. Abut.	445+55.53	-47.00	605.71	605.74

GIRDER 5

Location	Station	Offset	Theoretical Grade Elevations	Theoretical Grade Elevations Adjusted For Dead Load Deflection and Grinding
Bk. W. Abut.	444+04.61	-40.41	605.50	605.52
℄ Brg. W. Abut.	444+06.17	-40.41	605.51	605.53
A	444+16.24	-40.45	605.56	605.65
B	444+26.31	-40.47	605.61	605.76
C	444+36.35	-40.47	605.66	605.86
D	444+46.35	-40.47	605.70	605.94
E	444+56.35	-40.47	605.74	606.01
F	444+66.35	-40.47	605.77	606.07
G	444+76.35	-40.47	605.80	606.11
H	444+86.35	-40.47	605.83	606.13
I	444+96.35	-40.47	605.85	606.14
J	445+06.35	-40.47	605.87	606.13
K	445+16.35	-40.47	605.88	606.11
L	445+26.35	-40.47	605.89	606.08
M	445+36.35	-40.47	605.90	606.02
N	445+46.35	-40.47	605.90	605.96
℄ Brg. E. Abut.	445+52.35	-40.47	605.90	605.92
Bk. E. Abut.	445+53.90	-40.47	605.90	605.92

WB STAGE CONSTRUCTION LINE LT

Location	Station	Offset	Theoretical Grade Elevations	Theoretical Grade Elevations Adjusted For Dead Load Deflection and Grinding
Bk. W. Abut.	444+04.30	-39.14	605.54	605.56
℄ Brg. W. Abut.	444+05.85	-39.15	605.55	605.57
A	444+15.93	-39.19	605.60	605.69
B	444+25.99	-39.20	605.65	605.80
C	444+36.04	-39.21	605.69	605.90
D	444+46.04	-39.21	605.74	605.98
E	444+56.04	-39.21	605.78	606.05
F	444+66.04	-39.21	605.81	606.10
G	444+76.04	-39.21	605.84	606.14
H	444+86.04	-39.21	605.87	606.16
I	444+96.04	-39.21	605.89	606.17
J	445+06.04	-39.21	605.91	606.17
K	445+16.04	-39.21	605.92	606.15
L	445+26.04	-39.21	605.93	606.11
M	445+36.04	-39.21	605.94	606.06
N	445+46.04	-39.21	605.94	606.00
℄ Brg. E. Abut.	445+52.04	-39.21	605.94	605.96
Bk. E. Abut.	445+53.58	-39.21	605.94	605.96

WB STAGE CONSTRUCTION LINE RT

Location	Station	Offset	Theoretical Grade Elevations	Theoretical Grade Elevations Adjusted For Dead Load Deflection and Grinding
Bk. W. Abut.	444+03.31	-35.14	605.64	605.66
℄ Brg. W. Abut.	444+04.86	-35.14	605.65	605.67
A	444+14.93	-35.18	605.71	605.79
B	444+24.99	-35.20	605.76	605.91
C	444+35.03	-35.21	605.80	606.01
D	444+45.03	-35.21	605.85	606.09
E	444+55.03	-35.21	605.88	606.16
F	444+65.03	-35.21	605.92	606.22
G	444+75.03	-35.21	605.95	606.26
H	444+85.03	-35.21	605.98	606.28
I	444+95.03	-35.21	606.00	606.29
J	445+05.03	-35.21	606.02	606.28
K	445+15.03	-35.21	606.03	606.26
L	445+25.03	-35.21	606.04	606.23
M	445+35.03	-35.21	606.05	606.17
N	445+45.03	-35.21	606.05	606.11
℄ Brg. E. Abut.	445+51.03	-35.21	606.05	606.07
Bk. E. Abut.	445+52.58	-35.21	606.05	606.07

GIRDER 6

Location	Station	Offset	Theoretical Grade Elevations	Theoretical Grade Elevations Adjusted For Dead Load Deflection and Grinding
Bk. W. Abut.	444+03.00	-33.87	605.68	605.70
℄ Brg. W. Abut.	444+04.55	-33.88	605.69	605.71
A	444+14.61	-33.92	605.74	605.83
B	444+24.67	-33.94	605.79	605.94
C	444+34.72	-33.94	605.84	606.04
D	444+44.72	-33.94	605.88	606.13
E	444+54.72	-33.94	605.92	606.19
F	444+64.72	-33.94	605.95	606.25
G	444+74.72	-33.94	605.98	606.29
H	444+84.72	-33.94	606.01	606.31
I	444+94.72	-33.94	606.03	606.33
J	445+04.72	-33.94	606.05	606.32
K	445+14.72	-33.94	606.07	606.30
L	445+24.72	-33.94	606.08	606.26
M	445+34.72	-33.94	606.08	606.21
N	445+44.72	-33.94	606.09	606.15
℄ Brg. E. Abut.	445+50.72	-33.94	606.09	606.11
Bk. E. Abut.	445+52.26	-33.94	606.09	606.11

GIRDER 7

Location	Station	Offset	Theoretical Grade Elevations	Theoretical Grade Elevations Adjusted For Dead Load Deflection and Grinding
Bk. W. Abut.	444+01.39	-27.33	605.85	605.87
℄ Brg. W. Abut.	444+02.94	-27.34	605.86	605.88
A	444+12.99	-27.38	605.92	606.01
B	444+23.04	-27.41	605.97	606.12
C	444+33.08	-27.42	606.02	606.23
D	444+43.08	-27.42	606.06	606.31
E	444+53.08	-27.42	606.10	606.38
F	444+63.08	-27.42	606.13	606.44
G	444+73.08	-27.42	606.16	606.48
H	444+83.08	-27.42	606.19	606.51
I	444+93.08	-27.42	606.21	606.52
J	445+03.08	-27.42	606.23	606.51
K	445+13.08	-27.42	606.25	606.49
L	445+23.08	-27.42	606.26	606.45
M	445+33.08	-27.42	606.27	606.40
N	445+43.08	-27.42	606.27	606.33
℄ Brg. E. Abut.	445+49.08	-27.42	606.27	606.29
Bk. E. Abut.	445+50.63	-27.42	606.27	606.29

GIRDER A

Location	Station	Offset	Theoretical Grade Elevations	Theoretical Grade Elevations Adjusted For Dead Load Deflection and Grinding
Bk. W. Abut.	443+99.89	-21.24	606.02	606.04
℄ Brg. W. Abut.	444+01.44	-21.25	606.03	606.05
A	444+11.48	-21.30	606.08	606.16
B	444+21.52	-21.32	606.13	606.26
C	444+31.55	-21.33	606.18	606.35
D	444+41.56	-21.33	606.22	606.43
E	444+51.56	-21.33	606.26	606.49
F	444+61.56	-21.33	606.30	606.55
G	444+71.56	-21.33	606.33	606.59
H	444+81.56	-21.33	606.36	606.61
I	444+91.56	-21.33	606.38	606.63
J	445+01.56	-21.33	606.40	606.63
K	445+11.56	-21.33	606.42	606.61
L	445+21.56	-21.33	606.43	606.59
M	445+31.56	-21.33	606.44	606.55
N	445+41.56	-21.33	606.44	606.50
℄ Brg. E. Abut.	445+47.56	-21.33	606.44	606.46
Bk. E. Abut.	445+49.10	-21.33	606.44	606.46

GIRDER B

Location	Station	Offset	Theoretical Grade Elevations	Theoretical Grade Elevations Adjusted For Dead Load Deflection and Grinding
Bk. W. Abut.	443+98.40	-15.15	606.18	606.20
℄ Brg. W. Abut.	443+99.95	-15.16	606.19	606.21
A	444+09.97	-15.21	606.25	606.32
B	444+20.00	-15.24	606.30	606.42
C	444+30.03	-15.25	606.35	606.52
D	444+40.03	-15.25	606.39	606.59
E	444+50.03	-15.25	606.43	606.66
F	444+60.03	-15.25	606.47	606.71
G	444+70.03	-15.25	606.50	606.75
H	444+80.03	-15.25	606.53	606.78
I	444+90.03	-15.25	606.55	606.79
J	445+00.03	-15.25	606.57	606.79
K	445+10.03	-15.25	606.59	606.78
L	445+20.03	-15.25	606.60	606.76
M	445+30.03	-15.25	606.61	606.72
N	445+40.03	-15.25	606.61	606.67
℄ Brg. E. Abut.	445+46.03	-15.25	606.62	606.64
Bk. E. Abut.	445+47.58	-15.25	606.62	606.64

WB PGL

Location	Station	Offset	Theoretical Grade Elevations	Theoretical Grade Elevations Adjusted For Dead Load Deflection and Grinding
Bk. W. Abut.	443+97.99	-13.50	606.23	606.25
℄ Brg. W. Abut.	443+99.54	-13.50	606.23	606.26
A	444+09.55	-13.50	606.29	606.37
B	444+19.57	-13.50	606.34	606.47
C	444+29.59	-13.50	606.39	606.56
D	444+39.59	-13.50	606.44	606.64
E	444+49.59	-13.50	606.48	606.71
F	444+59.59	-13.50	606.52	606.76
G	444+69.59	-13.50	606.55	606.80
H	444+79.59	-13.50	606.58	606.83
I	444+89.59	-13.50	606.60	606.84
J	444+99.59	-13.50	606.62	606.84
K	445+09.59	-13.50	606.64	606.83
L	445+19.59	-13.50	606.65	606.81
M	445+29.59	-13.50	606.66	606.77
N	445+39.59	-13.50	606.66	606.72
℄ Brg. E. Abut.	445+45.59	-13.50	606.66	606.69
Bk. E. Abut.	445+47.14	-13.50	606.66	606.69

GIRDER C

Location	Station	Offset	Theoretical Grade Elevations	Theoretical Grade Elevations Adjusted For Dead Load Deflection and Grinding
Bk. W. Abut.	443+96.91	-9.06	606.34	606.37
℄ Brg. W. Abut.	443+98.45	-9.07	606.35	606.37
A	444+08.47	-9.12	606.41	606.48
B	444+18.49	-9.15	606.46	606.59
C	444+28.50	-9.17	606.51	606.68
D	444+38.51	-9.17	606.56	606.76
E	444+48.51	-9.17	606.60	606.83
F	444+58.51	-9.17	606.63	606.88
G	444+68.51	-9.17	606.67	606.92
H	444+78.51	-9.17	606.70	606.95
I	444+88.51	-9.17	606.72	606.96
J	444+98.51	-9.17	606.74	606.96
K	445+08.51	-9.17	606.76	606.95
L	445+18.51	-9.17	606.77	606.93
M	445+28.51	-9.17	606.78	606.89
N	445+38.51	-9.17	606.79	606.84
℄ Brg. E. Abut.	445+44.51	-9.17	606.79	606.81
Bk. E. Abut.	445+46.05	-9.17	606.79	606.81

GIRDER D

Location	Station	Offset	Theoretical Grade Elevations	Theoretical Grade Elevations Adjusted For Dead Load Deflection and Grinding
Bk. W. Abut.	443+95.42	-2.96	606.51	606.53
℄ Brg. W. Abut.	443+96.97	-2.97	606.52	606.54
A	444+06.97	-3.03	606.57	606.65
B	444+16.98	-3.06	606.63	606.76
C	444+26.98	-3.08	606.68	606.85
D	444+36.98	-3.08	606.72	606.93
E	444+46.98	-3.08	606.76	607.00
F	444+56.98	-3.08	606.80	607.06
G	444+66.98	-3.08	606.83	607.10
H	444+76.98	-3.08	606.86	607.13
I	444+86.98	-3.08	606.89	607.14
J	444+96.98	-3.08	606.91	607.14
K	445+06.98	-3.08	606.93	607.13
L	445+16.98	-3.08	606.94	607.10
M	445+26.98	-3.08	606.95	607.06
N	445+36.98	-3.08	606.96	607.01
℄ Brg. E. Abut.	445+42.98	-3.08	606.96	606.98
Bk. E. Abut.	445+44.53	-3.08	606.96	606.98

GIRDER E

Location	Station	Offset	Theoretical Grade Elevations	Theoretical Grade Elevations Adjusted For Dead Load Deflection and Grinding
Bk. W. Abut.	443+93.91	3.21	604.48	604.50
℄ Brg. W. Abut.	443+95.46	3.20	604.49	604.51
A	444+05.45	3.15	604.54	604.62
B	444+15.45	3.11	604.59	604.72
C	444+25.44	3.09	604.64	604.81
D	444+35.44	3.08	604.68	604.89
E	444+45.44	3.08	604.72	604.96
F	444+55.44	3.08	604.76	605.02
G	444+65.44	3.08	604.80	605.06
H	444+75.44	3.08	604.83	605.09
I	444+85.44	3.08	604.86	605.11
J	444+95.44	3.08	604.88	605.11
K	445+05.44	3.08	604.91	605.11
L	445+15.44	3.08	604.93	605.09
M	445+25.44	3.08	604.94	605.05
N	445+35.44	3.08	604.96	605.01
℄ Brg. E. Abut.	445+41.44	3.08	604.96	604.98
Bk. E. Abut.	445+42.98	3.08	604.96	604.98

GIRDER F

Location	Station	Offset	Theoretical Grade Elevations	Theoretical Grade Elevations Adjusted For Dead Load Deflection and Grinding
Bk. W. Abut.	443+92.43	9.31	604.64	604.66
℄ Brg. W. Abut.	443+93.98	9.29	604.65	604.67
A	444+03.96	9.24	604.70	604.78
B	444+13.94	9.20	604.75	604.88
C	444+23.93	9.17	604.80	604.97
D	444+33.91	9.17	604.85	605.05
E	444+43.91	9.17	604.89	605.12
F	444+53.91	9.17	604.93	605.17
G	444+63.91	9.17	604.96	605.22
H	444+73.91	9.17	605.00	605.25
I	444+83.91	9.17	605.03	605.27
J	444+93.91	9.17	605.05	605.27
K	445+03.91	9.17	605.07	605.27
L	445+13.91	9.17	605.09	605.25
M	445+23.91	9.17	605.11	605.22
N	445+33.91	9.17	605.13	605.18
℄ Brg. E. Abut.	445+39.91	9.17	605.13	605.15
Bk. E. Abut.	445+41.46	9.17	605.13	605.15

EB PGL

Location	Station	Offset	Theoretical Grade Elevations	Theoretical Grade Elevations Adjusted For Dead Load Deflection and Grinding
Bk. W. Abut.	443+91.41	13.50	604.75	604.78
℄ Brg. W. Abut.	443+92.96	13.50	604.76	604.78
A	444+02.92	13.50	604.82	604.89
B	444+12.88	13.50	604.87	605.00
C	444+22.85	13.50	604.92	605.09
D	444+32.83	13.50	604.96	605.17
E	444+42.83	13.50	605.01	605.24
F	444+52.83	13.50	605.05	605.29
G	444+62.83	13.50	605.08	605.34
H	444+72.83	13.50	605.11	605.37
I	444+82.83	13.50	605.14	605.39
J	444+92.83	13.50	605.17	605.39
K	445+02.83	13.50	605.20	605.39
L	445+12.83	13.50	605.22	605.37
M	445+22.83	13.50	605.23	605.34
N	445+32.83	13.50	605.25	605.30
℄ Brg. E. Abut.	445+38.83	13.50	605.25	605.27
Bk. E. Abut.	445+40.37	13.50	605.26	605.28

GIRDER G

Location	Station	Offset	Theoretical Grade Elevations	Theoretical Grade Elevations Adjusted For Dead Load Deflection and Grinding
Bk. W. Abut.	443+90.95	15.40	604.81	604.83
℄ Brg. W. Abut.	443+92.50	15.39	604.81	604.83
A	444+02.47	15.33	604.87	604.94
B	444+12.44	15.28	604.92	605.04
C	444+22.42	15.26	604.97	605.14
D	444+32.39	15.25	605.01	605.22
E	444+42.39	15.25	605.05	605.28
F	444+52.39	15.25	605.09	605.34
G	444+62.39	15.25	605.13	605.38
H	444+72.39	15.25	605.16	605.42
I	444+82.39	15.25	605.19	605.44
J	444+92.39	15.25	605.22	605.44
K	445+02.39	15.25	605.24	605.44
L	445+12.39	15.25	605.26	605.42
M	445+22.39	15.25	605.28	605.39
N	445+32.39	15.25	605.30	605.35
℄ Brg. E. Abut.	445+38.39	15.25	605.30	605.32
Bk. E. Abut.	445+39.94	15.25	605.30	605.33

GIRDER H

Location	Station	Offset	Theoretical Grade Elevations	Theoretical Grade Elevations Adjusted For Dead Load Deflection and Grinding
Bk. W. Abut.	443+89.48	21.49	604.97	604.99
℄ Brg. W. Abut.	443+91.02	21.48	604.98	605.00
A	444+00.98	21.42	605.03	605.11
B	444+10.95	21.37	605.08	605.21
C	444+20.91	21.34	605.13	605.30
D	444+30.87	21.33	605.18	605.38
E	444+40.87	21.33	605.22	605.45
F	444+50.87	21.33	605.26	605.51
G	444+60.87	21.33	605.30	605.55
H	444+70.87	21.33	605.33	605.58
I	444+80.87	21.33	605.36	605.60
J	444+90.87	21.33	605.39	605.61
K	445+00.87	21.33	605.41	605.60
L	445+10.87	21.33	605.43	605.59
M	445+20.87	21.33	605.45	605.56
N	445+30.87	21.33	605.47	605.52
℄ Brg. E. Abut.	445+36.87	21.33	605.47	605.49
Bk. E. Abut.	445+38.41	21.33	605.48	605.50

GIRDER 8

Location	Station	Offset	Theoretical Grade Elevations	Theoretical Grade Elevations Adjusted For Dead Load Deflection and Grinding
Bk. W. Abut.	443+88.01	27.59	605.13	605.15
℄ Brg. W. Abut.	443+89.55	27.58	605.14	605.16
A	443+99.50	27.51	605.20	605.29
B	444+09.45	27.46	605.25	605.40
C	444+19.40	27.43	605.30	605.51
D	444+29.36	27.42	605.34	605.60
E	444+39.34	27.42	605.39	605.67
F	444+49.34	27.42	605.43	605.74
G	444+59.34	27.42	605.46	605.78
H	444+69.34	27.42	605.50	605.81
I	444+79.34	27.42	605.53	605.83
J	444+89.34	27.42	605.56	605.83
K	444+99.34	27.42	605.58	605.82
L	445+09.34	27.42	605.60	605.79
M	445+19.34	27.42	605.62	605.75
N	445+29.34	27.42	605.64	605.70
℄ Brg. E. Abut.	445+35.34	27.42	605.64	605.66
Bk. E. Abut.	445+36.89	27.42	605.65	605.67

GIRDER 9

Location	Station	Offset	Theoretical Grade Elevations	Theoretical Grade Elevations Adjusted For Dead Load Deflection and Grinding
Bk. W. Abut.	443+86.43	34.13	605.31	605.33
℄ Brg. W. Abut.	443+87.97	34.12	605.32	605.34
A	443+97.91	34.05	605.37	605.46
B	444+07.85	34.00	605.42	605.58
C	444+17.74	33.96	605.47	605.68
D	444+27.73	33.95	605.52	605.77
E	444+37.71	33.94	605.56	605.85
F	444+47.71	33.94	605.60	605.91
G	444+57.71	33.94	605.64	605.96
H	444+67.71	33.94	605.68	605.99
I	444+77.71	33.94	605.71	606.01
J	444+87.71	33.94	605.74	606.01
K	444+97.71	33.94	605.76	606.00
L	445+07.71	33.94	605.78	605.97
M	445+17.71	33.94	605.80	605.93
N	445+27.71	33.94	605.82	605.88
℄ Brg. E. Abut.	445+33.71	33.94	605.83	605.85
Bk. E. Abut.	445+35.25	33.94	605.83	605.85

EB STAGE CONSTRUCTION LINE LT

Location	Station	Offset	Theoretical Grade Elevations	Theoretical Grade Elevations Adjusted For Dead Load Deflection and Grinding
Bk. W. Abut.	443+86.13	35.40	605.34	605.36
℄ Brg. W. Abut.	443+87.66	35.38	605.35	605.37
A	443+97.60	35.31	605.41	605.50
B	444+07.54	35.26	605.46	605.61
C	444+17.48	35.23	605.51	605.72
D	444+27.42	35.21	605.55	605.81
E	444+37.39	35.21	605.60	605.88
F	444+47.39	35.21	605.64	605.95
G	444+57.39	35.21	605.68	605.99
H	444+67.39	35.21	605.71	606.02
I	444+77.39	35.21	605.74	606.04
J	444+87.39	35.21	605.77	606.05
K	444+97.39	35.21	605.80	606.03
L	445+07.39	35.21	605.82	606.01
M	445+17.39	35.21	605.84	605.97
N	445+27.39	35.21	605.85	605.92
℄ Brg. E. Abut.	445+33.39	35.21	605.86	605.88
Bk. E. Abut.	445+34.94	35.21	605.86	605.88

EB STAGE CONSTRUCTION LINE RT

Location	Station	Offset	Theoretical Grade Elevations	Theoretical Grade Elevations Adjusted For Dead Load Deflection and Grinding
Bk. W. Abut.	443+85.16	39.40	605.45	605.47
℄ Brg. W. Abut.	443+86.70	39.39	605.46	605.48
A	443+96.63	39.32	605.51	605.61
B	444+06.56	39.27	605.57	605.72
C	444+16.50	39.23	605.62	605.83
D	444+27.43	39.21	605.67	605.92
E	444+36.39	39.21	605.71	605.99
F	444+46.39	39.21	605.75	606.06
G	444+56.39	39.21	605.79	606.11
H	444+66.39	39.21	605.82	606.14
I	444+76.39	39.21	605.85	606.16
J	444+86.39	39.21	605.88	606.16
K	444+96.39	39.21	605.91	606.15
L	445+06.39	39.21	605.93	606.12
M	445+16.39	39.21	605.95	606.08
N	445+26.39	39.21	605.97	606.03
℄ Brg. E. Abut.	445+32.39	39.21	605.97	605.99
Bk. E. Abut.	445+33.93	39.21	605.98	606.00

GIRDER 10

Location	Station	Offset	Theoretical Grade Elevations	Theoretical Grade Elevations Adjusted For Dead Load Deflection and Grinding
Bk. W. Abut.	443+84.86	40.67	605.49	605.51
℄ Brg. W. Abut.	443+86.40	40.66	605.49	605.51
A	443+96.33	40.59	605.55	605.64
B	444+06.26	40.53	605.60	605.76
C	444+16.19	40.50	605.65	605.86
D	444+26.12	40.48	605.70	605.95
E	444+36.07	40.47	605.74	606.03
F	444+46.07	40.47	605.78	606.09
G	444+56.07	40.47	605.82	606.14
H	444+66.07	40.47	605.86	606.17
I	444+76.07	40.47	605.89	606.19
J	444+86.07	40.47	605.92	606.20
K	444+96.07	40.47	605.94	606.18
L	445+06.07	40.47	605.97	606.16
M	445+16.07	40.47	605.98	606.12
N	445+26.07	40.47	606.00	606.06
℄ Brg. E. Abut.	445+32.07	40.47	606.01	606.03
Bk. E. Abut.	445+33.62	40.47	606.01	606.03

GIRDER 11

Location	Station	Offset	Theoretical Grade Elevations	Theoretical Grade Elevations Adjusted For Dead Load Deflection and Grinding
Bk. W. Abut.	443+83.29	47.21	605.66	605.68
℄ Brg. W. Abut.	443+84.83	47.20	605.67	605.69
A	443+94.74	47.12	605.72	605.82
B	444+04.66	47.07	605.78	605.94
C	444+14.58	47.03	605.83	606.05
D	444+24.50	47.01	605.87	606.14
E	444+34.44	47.00	605.92	606.22
F	444+44.44	47.00	605.96	606.29
G	444+54.44	47.00	606.00	606.34
H	444+64.44	47.00	606.04	606.37
I	444+74.44	47.00	606.07	606.39
J	444+84.44	47.00	606.10	606.39
K	444+94.44	47.00	606.12	606.38
L	445+04.44	47.00	606.15	606.35
M	445+14.44	47.00	606.17	606.31
N	445+24.44	47.00	606.18	606.25
℄ Brg. E. Abut.	445+30.44	47.00	606.19	606.21
Bk. E. Abut.	445+31.98	47.00	606.19	606.21

GIRDER 12

Location	Station	Offset	Theoretical Grade Elevations	Theoretical Grade Elevations Adjusted For Dead Load Deflection and Grinding
Bk. W. Abut.	443+81.73	53.75	605.84	605.86
℄ Brg. W. Abut.	443+83.26	53.74	605.85	605.87
A	443+93.17	53.66	605.90	606.00
B	444+03.07	53.60	605.95	606.12
C	444+12.98	53.56	606.00	606.23
D	444+22.89	53.54	606.05	606.33
E	444+32.80	53.53	606.10	606.41
F	444+42.80	53.53	606.14	606.47
G	444+52.80	53.53	606.18	606.52
H	444+62.80	53.53	606.21	606.56
I	444+72.80	53.53	606.25	606.57
J	444+82.80	53.53	606.28	606.58
K	444+92.80	53.53	606.30	606.56
L	445+02.80	53.53	606.33	606.53
M	445+12.80	53.53	606.35	606.49
N	445+22.80	53.53	606.37	606.43
℄ Brg. E. Abut.	445+28.80	53.53	606.37	606.40
Bk. E. Abut.	445+30.35	53.53	606.38	606.40

GIRDER 13

Location	Station	Offset	Theoretical Grade Elevations	Theoretical Grade Elevations Adjusted For Dead Load Deflection and Grinding
Bk. W. Abut.	443+80.16	60.29	606.01	606.03
℄ Brg. W. Abut.	443+81.70	60.28	606.02	606.04
A	443+91.59	60.20	606.08	606.17
B	444+01.49	60.14	606.13	606.30
C	444+11.38	60.10	606.18	606.41
D	444+21.28	60.07	606.23	606.51
E	444+31.18	60.06	606.27	606.59
F	444+41.16	60.06	606.32	606.66
G	444+51.16	60.06	606.36	606.71
H	444+61.16	60.06	606.39	606.74
I	444+71.16	60.06	606.43	606.76
J	444+81.16	60.06	606.46	606.76
K	444+91.16	60.06	606.48	606.75
L	445+01.16	60.06	606.51	606.72
M	445+11.16	60.06	606.53	606.67
N	445+21.16	60.06	606.55	606.61
℄ Brg. E. Abut.	445+27.16	60.06	606.56	606.58
Bk. E. Abut.	445+28.71	60.06	606.56	606.58

GIRDER 14

Location	Station	Offset	Theoretical Grade Elevations	Theoretical Grade Elevations Adjusted For Dead Load Deflection and Grinding
Bk. W. Abut.	443+78.61	66.84	606.19	606.21
℄ Brg. W. Abut.	443+80.14	66.82	606.20	606.22
A	443+90.02	66.74	606.25	606.36
B	443+99.91	66.68	606.31	606.49
C	444+09.79	66.63	606.36	606.61
D	444+19.68	66.60	606.41	606.71
E	444+29.56	66.58	606.45	606.80
F	444+39.53	66.58	606.49	606.87
G	444+49.53	66.58	606.54	606.92
H	444+59.53	66.58	606.57	606.95
I	444+69.53	66.58	606.61	606.97
J	444+79.53	66.58	606.64	606.97
K	444+89.53	66.58	606.67	606.95
L	444+99.53	66.58	606.69	606.92
M	445+09.53	66.58	606.71	606.87
N	445+19.53	66.58	606.73	606.80
℄ Brg. E. Abut.	445+25.53	66.58	606.74	606.76
Bk. E. Abut.	445+27.08	66.58	606.74	606.76

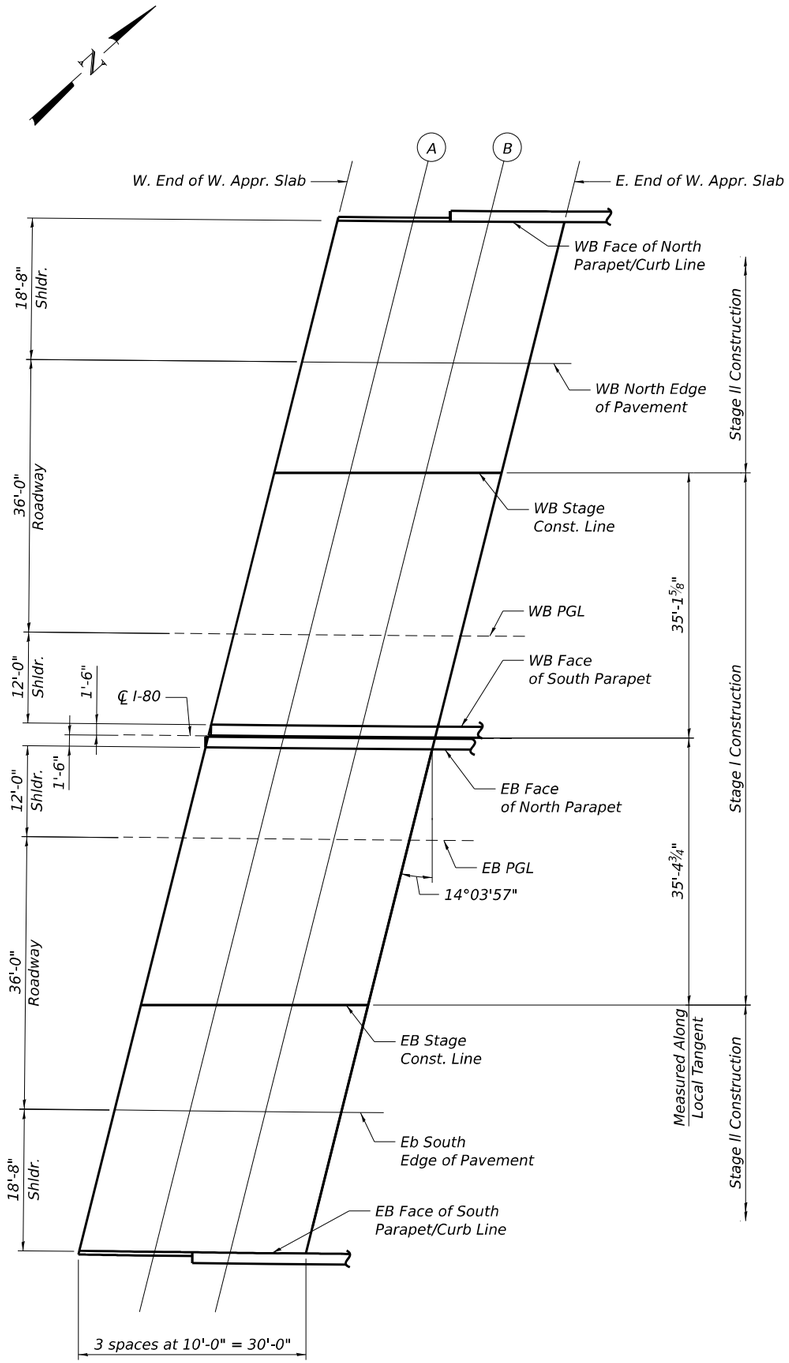

WEST APPROACH SLAB PLAN

WB FACE OF NORTH PARAPET/CURB LINE

Location	Station	Offset	Theoretical Grade Elevations	Theoretical Grade Elevations Adjusted For Grinding
W. End of West Appr. Slab	443+81.19	-68.17	604.57	604.59
A	443+91.29	-68.17	604.64	604.66
B	444+01.40	-68.17	604.70	604.72
E. End of West Appr. Slab	444+11.51	-68.17	604.75	604.78

WB NORTH EDGE OF PAVEMENT

Location	Station	Offset	Theoretical Grade Elevations	Theoretical Grade Elevations Adjusted For Grinding
W. End of West Appr. Slab	443+76.65	-49.50	605.07	605.09
A	443+86.72	-49.50	605.14	605.16
B	443+96.79	-49.50	605.20	605.22
E. End of West Appr. Slab	444+06.86	-49.50	605.26	605.28

WB STAGE CONSTRUCTION LINE

Location	Station	Offset	Theoretical Grade Elevations	Theoretical Grade Elevations Adjusted For Grinding
W. End of West Appr. Slab	443+73.18	-35.14	605.45	605.47
A	443+83.22	-35.14	605.52	605.54
B	443+93.26	-35.14	605.58	605.61
E. End of West Appr. Slab	444+03.31	-35.14	605.64	605.66

WB PGL

Location	Station	Offset	Theoretical Grade Elevations	Theoretical Grade Elevations Adjusted For Grinding
W. End of West Appr. Slab	443+67.99	-13.50	606.03	606.05
A	443+77.98	-13.50	606.10	606.12
B	443+87.99	-13.50	606.16	606.18
E. End of West Appr. Slab	443+97.99	-13.50	606.23	606.25

WB FACE OF SOUTH PARAPET

Location	Station	Offset	Theoretical Grade Elevations	Theoretical Grade Elevations Adjusted For Grinding
W. End of West Appr. Slab	443+65.12	-1.50	606.35	606.37
A	443+75.10	-1.50	606.42	606.44
B	443+85.08	-1.50	606.48	606.51
E. End of West Appr. Slab	443+95.06	-1.50	606.55	606.57

EB FACE OF NORTH PARAPET

Location	Station	Offset	Theoretical Grade Elevations	Theoretical Grade Elevations Adjusted For Grinding
W. End of West Appr. Slab	443+64.41	1.50	604.25	604.27
A	443+74.38	1.50	604.31	604.33
B	443+84.35	1.50	604.37	604.39
E. End of West Appr. Slab	443+94.33	1.50	604.43	604.45

EB PGL

Location	Station	Offset	Theoretical Grade Elevations	Theoretical Grade Elevations Adjusted For Grinding
W. End of West Appr. Slab	443+61.56	13.50	604.57	604.59
A	443+71.51	13.50	604.63	604.66
B	443+81.46	13.50	604.70	604.72
E. End of West Appr. Slab	443+91.42	13.50	604.75	604.78

EB STAGE CONSTRUCTION LINE

Location	Station	Offset	Theoretical Grade Elevations	Theoretical Grade Elevations Adjusted For Grinding
W. End of West Appr. Slab	443+56.39	35.40	605.15	605.18
A	443+66.30	35.40	605.22	605.24
B	443+76.21	35.40	605.28	605.30
E. End of West Appr. Slab	443+86.13	35.40	605.34	605.36

EB SOUTH EDGE OF PAVEMENT

Location	Station	Offset	Theoretical Grade Elevations	Theoretical Grade Elevations Adjusted For Grinding
W. End of West Appr. Slab	443+53.08	49.50	605.53	605.55
A	443+62.96	49.50	605.60	605.62
B	443+72.85	49.50	605.66	605.68
E. End of West Appr. Slab	443+82.74	49.50	605.72	605.74

EB FACE OF SOUTH PARAPET/CURB LINE

Location	Station	Offset	Theoretical Grade Elevations	Theoretical Grade Elevations Adjusted For Grinding
W. End of West Appr. Slab	443+48.73	68.17	606.03	606.05
A	443+58.58	68.17	606.10	606.12
B	443+68.43	68.17	606.16	606.18
E. End of West Appr. Slab	443+78.29	68.17	606.22	606.24

TRANSYSTEMS

USER NAME = amkluver	DESIGNED - TJA	REVISED -	
	CHECKED - SN	REVISED -	
PLOT SCALE = NTS	DRAWN - TJA	REVISED -	
PLOT DATE = 6/23/2023	CHECKED - WJC	REVISED -	

STATE OF ILLINOIS
DEPARTMENT OF TRANSPORTATION

TOP OF WEST APPROACH SLAB ELEVATIONS
STRUCTURE NOS. 099-0301 (EB) & 099-0302 (WB)

SHEET S1-15 OF S1-47 SHEETS

F.A.I. RTE.	SECTION	COUNTY	TOTAL SHEETS	SHEET NO.
I-80	FAI 80 21 STRUCTURE 6	WILL	898	526

CONTRACT NO. 62R27

ILLINOIS | FED. AID PROJECT

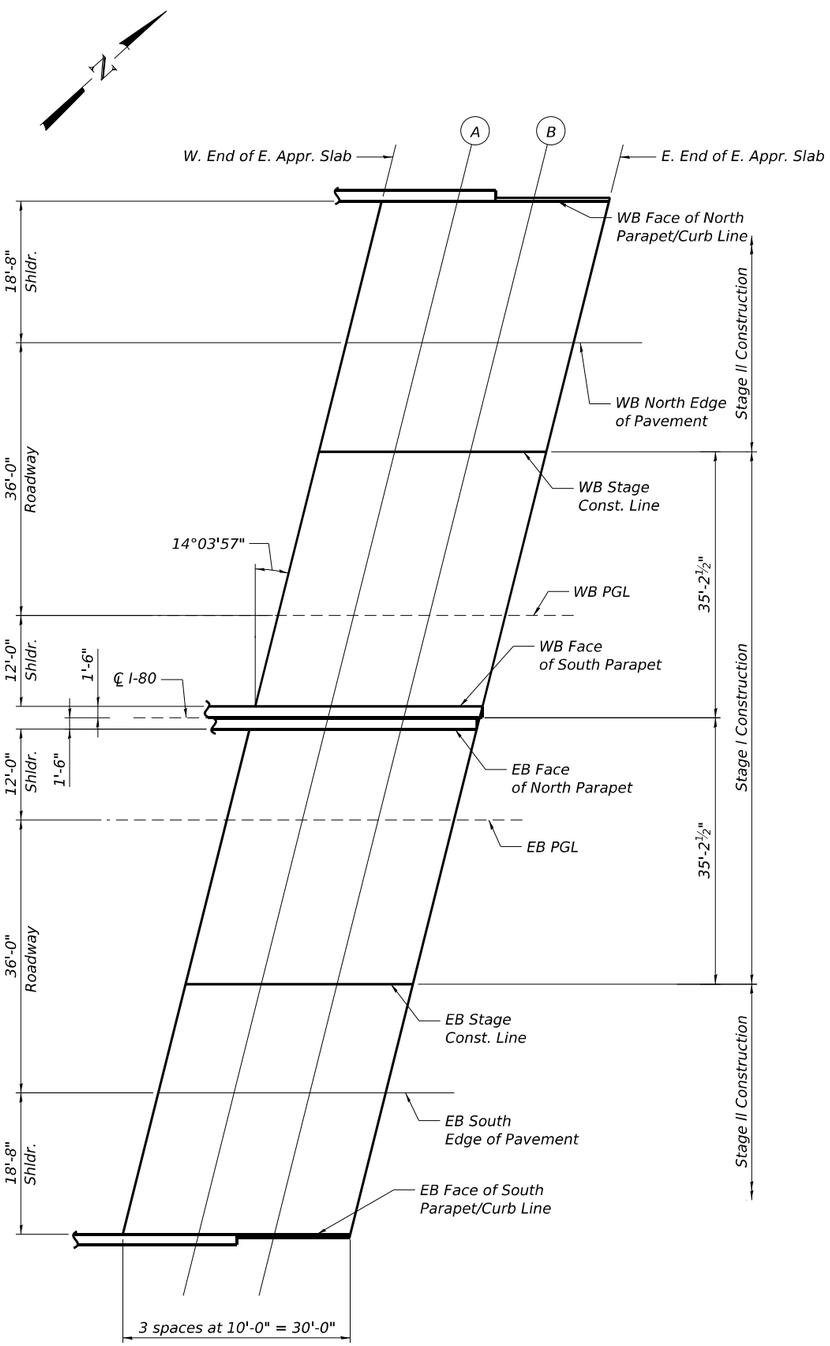

EAST APPROACH SLAB PLAN

WB FACE OF NORTH PARAPET/CURB LINE

Location	Station	Offset	Theoretical Grade Elevations	Theoretical Grade Elevations Adjusted For Grinding
W. End of East Appr. Slab	445+60.84	-68.17	605.11	605.13
A	445+70.84	-68.17	605.10	605.13
B	445+80.84	-68.17	605.09	605.11
E. End of East Appr. Slab	445+90.84	-68.17	605.08	605.10

WB NORTH EDGE OF PAVEMENT

Location	Station	Offset	Theoretical Grade Elevations	Theoretical Grade Elevations Adjusted For Grinding
W. End of East Appr. Slab	445+56.16	-49.50	605.64	605.66
A	445+66.16	-49.50	605.64	605.66
B	445+76.16	-49.50	605.63	605.65
E. End of East Appr. Slab	445+86.16	-49.50	605.61	605.63

WB STAGE CONSTRUCTION LINE

Location	Station	Offset	Theoretical Grade Elevations ℄ I-80	Theoretical Grade Elevations Adjusted For Grinding
W. End of East Appr. Slab	445+52.58	-35.21	606.05	606.07
A	445+62.58	-35.21	606.04	606.07
B	445+72.58	-35.21	606.04	606.06
E. End of East Appr. Slab	445+82.58	-35.21	606.02	606.04

WB PGL

Location	Station	Offset	Theoretical Grade Elevations	Theoretical Grade Elevations Adjusted For Grinding
W. End of East Appr. Slab	445+47.14	-13.50	606.66	606.69
A	445+57.14	-13.50	606.66	606.68
B	445+67.14	-13.50	606.66	606.68
E. End of East Appr. Slab	445+77.14	-13.50	606.64	606.67

WB FACE OF SOUTH PARAPET

Location	Station	Offset	Theoretical Grade Elevations	Theoretical Grade Elevations Adjusted For Grinding
W. End of East Appr. Slab	445+44.13	-1.50	607.00	607.03
A	445+54.13	-1.50	607.00	607.02
B	445+64.13	-1.50	607.00	607.02
E. End of East Appr. Slab	445+74.13	-1.50	606.99	607.01

EB FACE OF NORTH PARAPET

Location	Station	Offset	Theoretical Grade Elevations	Theoretical Grade Elevations Adjusted For Grinding
W. End of East Appr. Slab	445+43.38	1.50	604.92	604.94
A	445+53.38	1.50	604.93	604.95
B	445+63.38	1.50	604.93	604.95
E. End of East Appr. Slab	445+73.38	1.50	604.93	604.95

EB PGL

Location	Station	Offset	Theoretical Grade Elevations	Theoretical Grade Elevations Adjusted For Grinding
W. End of East Appr. Slab	445+40.38	13.50	605.26	605.28
A	445+50.38	13.50	605.26	605.29
B	445+60.38	13.50	605.27	605.29
E. End of East Appr. Slab	445+70.38	13.50	605.27	605.29

EB STAGE CONSTRUCTION LINE

Location	Station	Offset	Theoretical Grade Elevations	Theoretical Grade Elevations Adjusted For Grinding
W. End of East Appr. Slab	445+34.94	35.21	605.86	605.88
A	445+44.94	35.21	605.87	605.90
B	445+54.94	35.21	605.88	605.90
E. End of East Appr. Slab	445+64.94	35.21	605.89	605.91

EB SOUTH EDGE OF PAVEMENT

Location	Station	Offset	Theoretical Grade Elevations	Theoretical Grade Elevations Adjusted For Grinding
W. End of East Appr. Slab	445+31.36	49.50	606.26	606.28
A	445+41.36	49.50	606.28	606.30
B	445+51.36	49.50	606.28	606.30
E. End of East Appr. Slab	445+61.36	49.50	606.29	606.31

EB FACE OF SOUTH PARAPET/CURB LINE

Location	Station	Offset	Theoretical Grade Elevations	Theoretical Grade Elevations Adjusted For Grinding
W. End of East Appr. Slab	445+26.68	68.17	606.79	606.81
A	445+36.68	68.17	606.80	606.82
B	445+46.68	68.17	606.81	606.83
E. End of East Appr. Slab	445+56.68	68.17	606.82	606.84

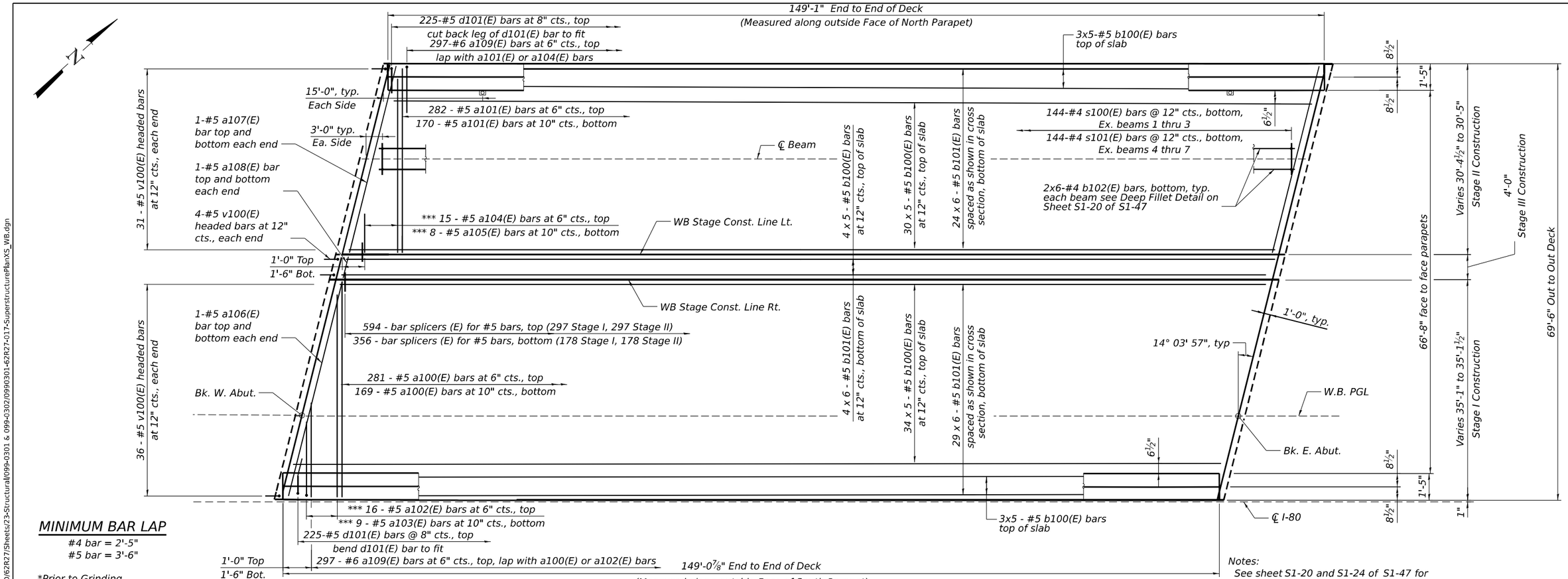

MINIMUM BAR LAP

#4 bar = 2'-5"
#5 bar = 3'-6"

*Prior to Grinding
**After Grinding
***See Field Cutting Diagram on Sheet S1-24 of S1-47

Notes:
See sheet S1-20 and S1-24 of S1-47 for superstructure details and Bill of Material.
Bars indicated thus 20 x 3-#5 etc. indicates 20 lines of bars with 3 lengths per line.

PLAN

(Westbound)

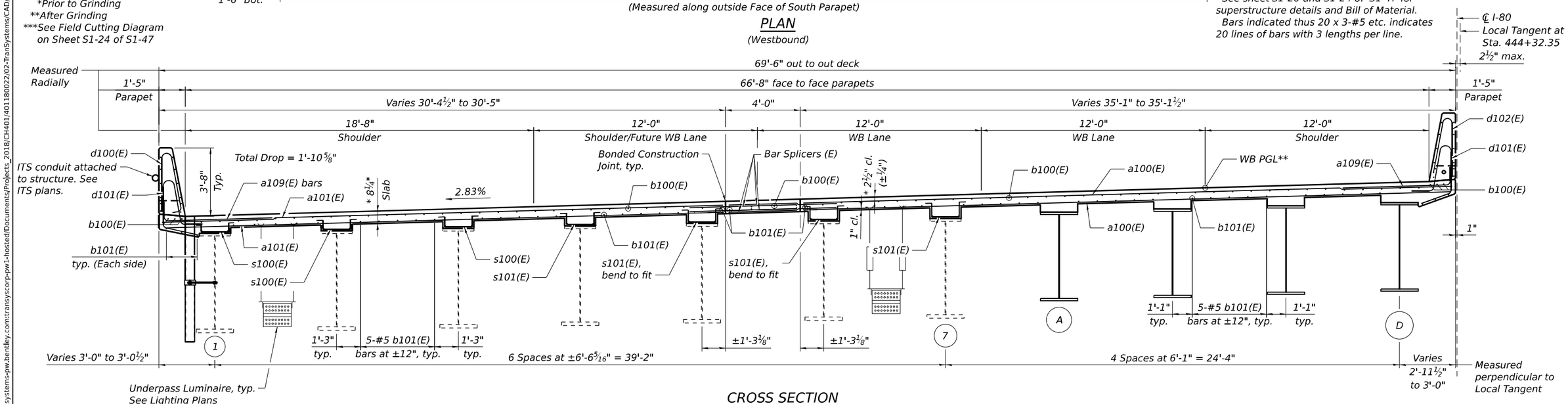

CROSS SECTION

(Looking East)

TRANSYSTEMS	USER NAME = amkluver	DESIGNED - TJA	REVISED -	STATE OF ILLINOIS DEPARTMENT OF TRANSPORTATION	SUPERSTRUCTURE PLAN AND CROSS SECTION - WB STRUCTURE NOS. 099-0301 (EB) & 099-0302 (WB)
		CHECKED - ESS	REVISED -		
	PLOT SCALE = NTS	DRAWN - ESS	REVISED -		
	PLOT DATE = 7/27/2023	CHECKED - TJA	REVISED -		SHEET S1-17 OF S1-47 SHEETS

F.A.I. RTE.	SECTION	COUNTY	TOTAL SHEETS	SHEET NO.
I-80	FAI 80 21 STRUCTURE 6	WILL	898	528
		CONTRACT NO. 62R27		
	ILLINOIS	FED. AID PROJECT		

MODEL: Drawing View-1
FILE NAME: pw://transystems-pw.bentley.com:transyscorp-pw1-hosted/Documents/Projects_2018/CH401/401180022/02-TranSystems/CAD/62R27/Sheets/23-Structural/099-0301 & 099-0302/0990301-62R27-017-SuperstructurePlanXS_WB.dgn

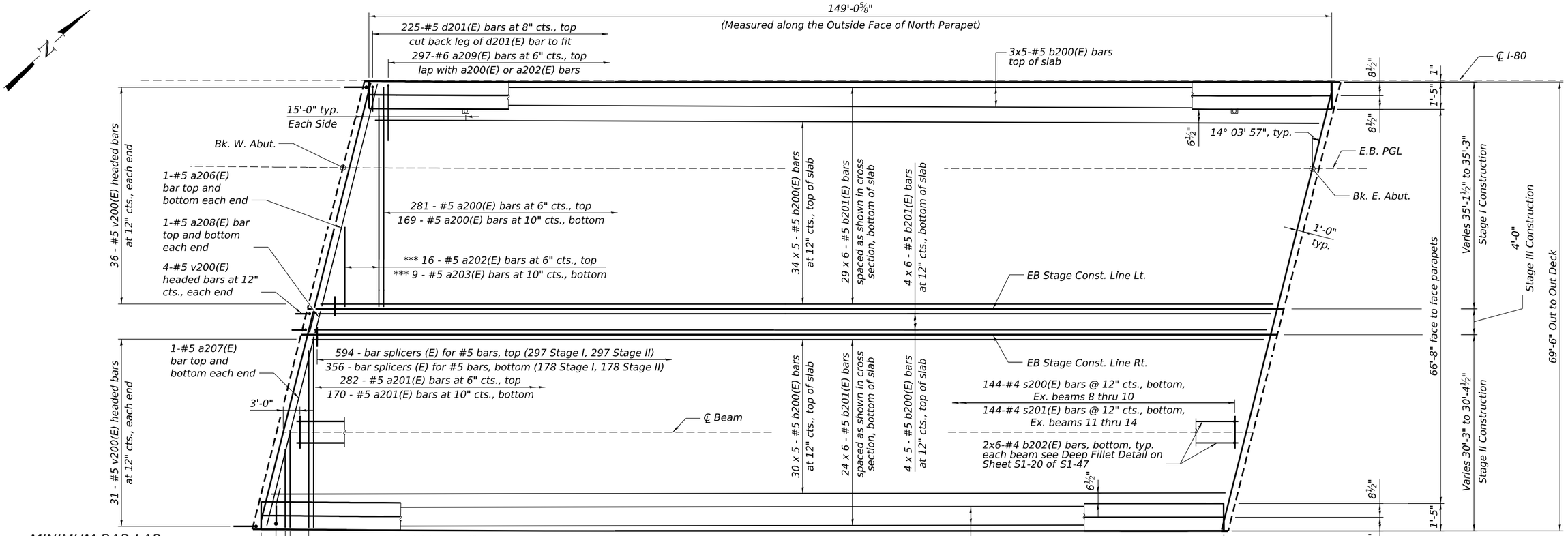

MINIMUM BAR LAP

#4 bar = 2'-5"
#5 bar = 3'-6"
*Prior to Grinding
**After Grinding
***See Field Cutting Diagram on Sheet S1-24 of S1-47

PLAN

(Eastbound)

Notes:
See sheet S1-20 and S1-24 of S1-47 for superstructure details and Bill of Material.
Bars indicated thus 20 x 3-#5 etc. indicates 20 lines of bars with 3 lengths per line.

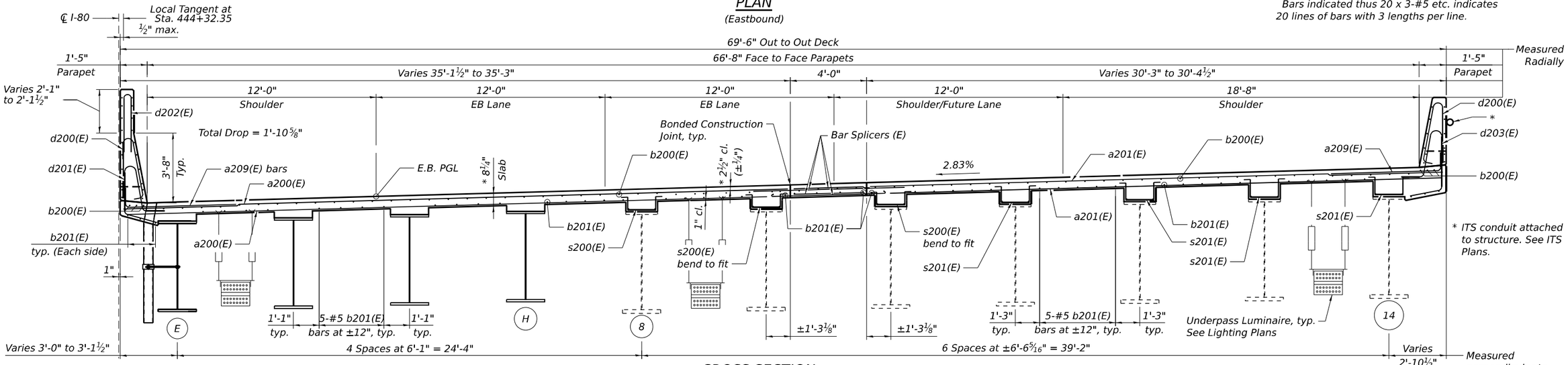

CROSS SECTION

(Looking East)

MODEL: Drawing
FILE NAME: pw://transystems-pw.bentley.com:transyscorp-pw1-hosted/Documents/Projects_2018/CH401/401180022/02-TranSystems/CAD/62R27/Sheets/23-Structural/099-0301 & 099-0302/09900301-62R27-018-SuperstructurePlanXS_EB.dgn

TRANSYSTEMS	USER NAME = amkluver	DESIGNED - TJA	REVISED -	STATE OF ILLINOIS DEPARTMENT OF TRANSPORTATION	SUPERSTRUCTURE PLAN AND CROSS SECTION - EB STRUCTURE NOS. 099-0301 (EB) & 099-0302 (WB)
		CHECKED - ESS	REVISED -		
	PLOT SCALE = NTS	DRAWN - ESS	REVISED -		
	PLOT DATE = 6/23/2023	CHECKED - TJA	REVISED -		SHEET S1-18 OF S1-47 SHEETS

F.A.I. RTE.	SECTION	COUNTY	TOTAL SHEETS	SHEET NO.
I-80	FAI 80 21 STRUCTURE 6	WILL	898	529
		CONTRACT NO. 62R27		
	ILLINOIS	FED. AID PROJECT		

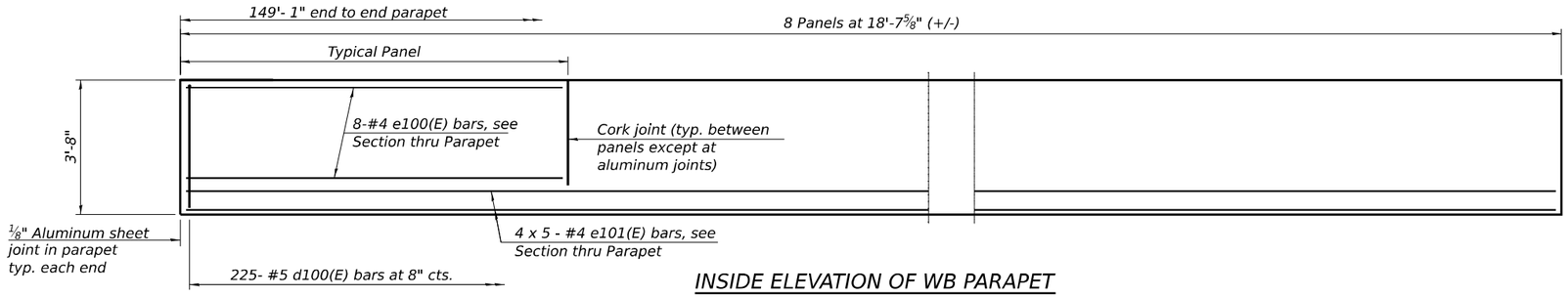

INSIDE ELEVATION OF WB PARAPET

MINIMUM BAR LAP

#4 BAR = 2'-5"

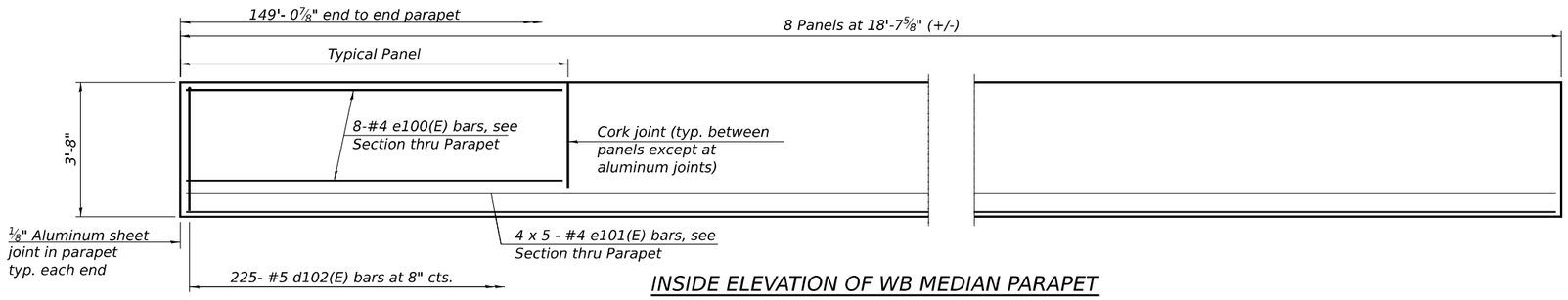

INSIDE ELEVATION OF WB MEDIAN PARAPET

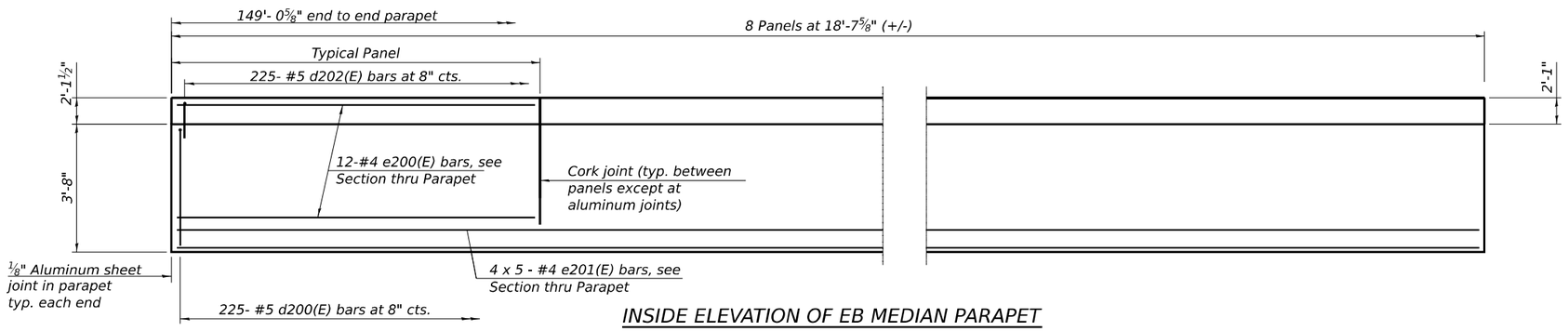

INSIDE ELEVATION OF EB MEDIAN PARAPET

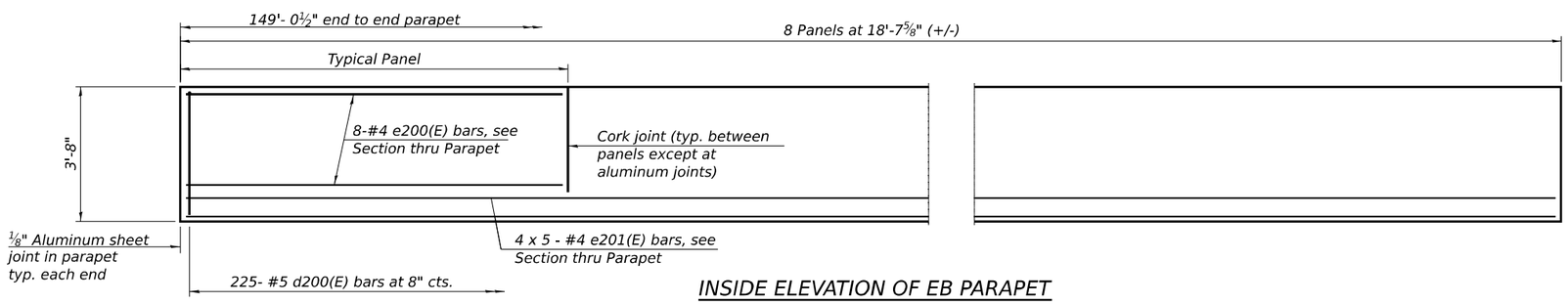

INSIDE ELEVATION OF EB PARAPET

MODEL: Drawing
FILE NAME: pw://transystems-pw.bentley.com:transyscorp-pw1-hosted/Documents/Projects_2018/CH401/401180022/02-TranSystems/CAD/62R27/Sheets/23-Structural/099-0301 & 099-0302/0990301-62R27-019-ParapetRailing_Elev.dgn

TRANSYSTEMS	USER NAME = amkluver	DESIGNED - TJA	REVISED -	STATE OF ILLINOIS DEPARTMENT OF TRANSPORTATION	PARAPET ELEVATIONS STRUCTURE NOS. 099-0301 (EB) & 099-0302 (WB)	F.A.I. RTE.	SECTION	COUNTY	TOTAL SHEETS	SHEET NO.
		CHECKED - ESS	REVISED -			I-80	FAI 80 21 STRUCTURE 6	WILL	898	530
	PLOT SCALE = NTS	DRAWN - ESS	REVISED -					CONTRACT NO. 62R27		
	PLOT DATE = 7/27/2023	CHECKED - TJA	REVISED -		SHEET S1-19 OF S1-47 SHEETS			ILLINOIS FED. AID PROJECT		

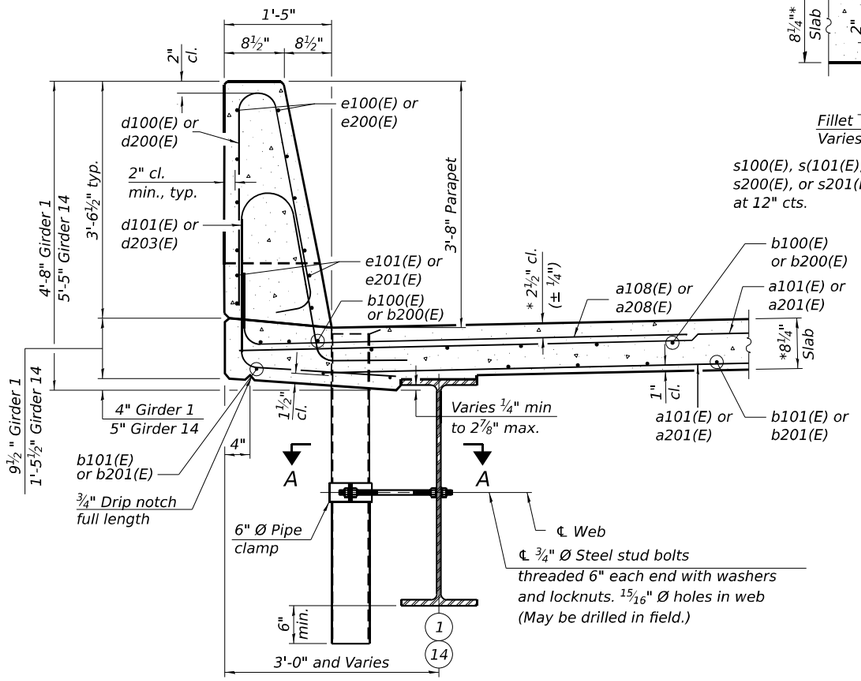

SECTION THRU PARAPET

(Looking East)
(WB north parapet shown, EB south parapet similar)
(Floor Drain on north parapet only)

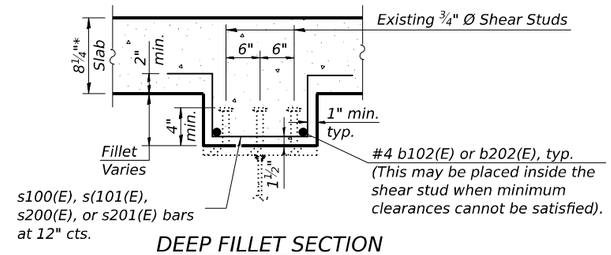

DEEP FILLET SECTION

*Prior to Grinding
(Fillet reinforcement is required when the fillet exceeds 6")

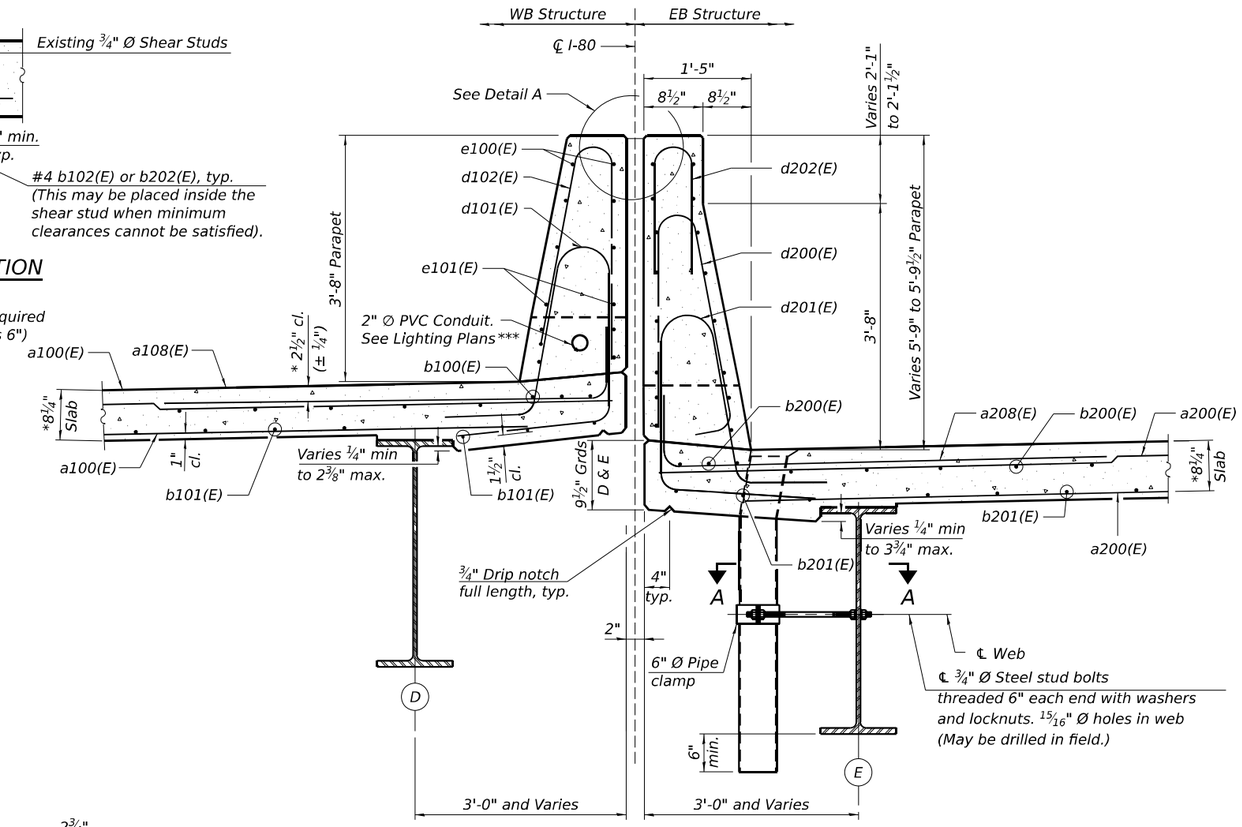

SECTION THRU MEDIAN PARAPET

(Looking East)
(See Section Thru Exterior Parapet for additional dimensions and reinforcement)
***For location of conduit, maintain a 1½" cl. from reinforcement

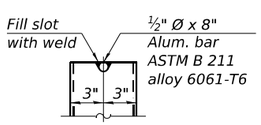

ALUMINUM TUBE

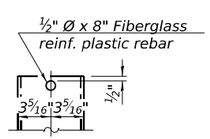

FIBERGLASS PIPE

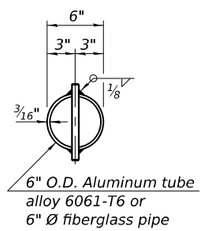

TOP PLAN

(Showing aluminum tube)

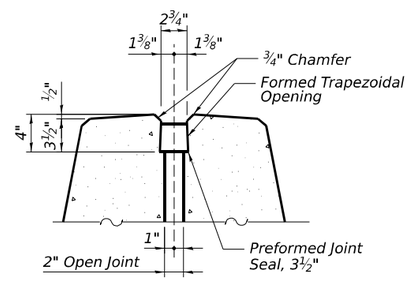

DETAIL A

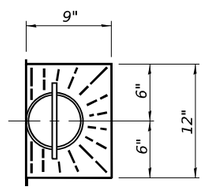

TOP PLAN

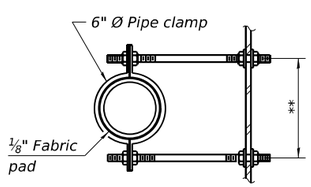

SECTION A-A

**Dimension as required by pipe clamp

Notes:

Fiberglass pipe shall conform to ASTM D2996, with short-time rupture strength hoop tensile stress of 30,000 p.s.i. minimum.

The exterior surfaces of the floor drains shall be painted according to Article 506 with the finish coat as specified. The exterior surfaces of the drains shall be cleaned according to the Society of Protective Coating's Spec. SSPC-SP1 prior to painting.

The top portion of aluminum floor drains shall be coated to minimize reaction with wet concrete.

The clamping device shall be galvanized according to AASHTO M 232. Cost of clamping device included with Floor Drains.

The ⅛" aluminum sheet shall be ASTM B 209 alloy 3003-H14 and coated to minimize reaction with wet concrete. Cost included with Concrete Superstructure.

The polyurethane sealant shall be according to Article 1050.04 of the Std. Spec. and the color shall be gray.

Headed bars shall conform to ASTM A970 with threaded attachment; Class HA; and reinforcement bars conforming to ASTM A706. Cost included with Reinforcement Bars, Epoxy Coated.

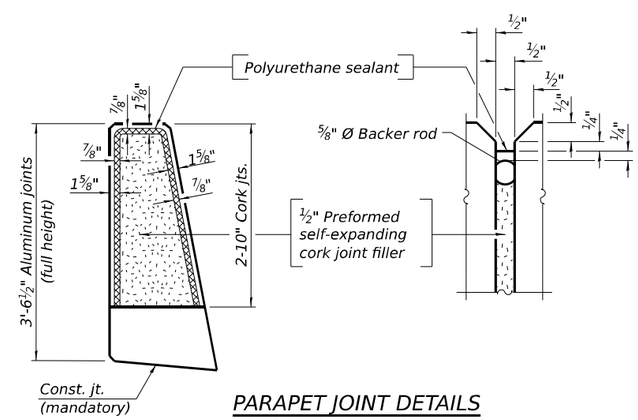

PARAPET JOINT DETAILS

Extend height of cork and aluminum joints as required at EB median parapet.

MODEL: Untitled
FILE NAME: pw://transystems-pw.bentley.com:transyscorp-pw1-hosted/Documents/Projects_2018/CH401/401180022/02-TranSystems/CAD/62R27/Sheets/23-Structural/099-0301 & 099-0302/0990301-62R27-020-ParapetRailing_Details.dgn

TRANSYSTEMS	USER NAME = amkluver	DESIGNED - ESS	REVISED -	STATE OF ILLINOIS DEPARTMENT OF TRANSPORTATION	PARAPET DETAILS STRUCTURE NOS. 099-0301 (EB) & 099-0302 (WB)	F.A.I. RTE.	SECTION	COUNTY	TOTAL SHEETS	SHEET NO.
		CHECKED - ESS	REVISED -			I-80	FAI 80 21 STRUCTURE 6	WILL	898	531
	PLOT SCALE = NTS	DRAWN - ESS	REVISED -					CONTRACT NO. 62R27		
	PLOT DATE = 7/27/2023	CHECKED - TJA	REVISED -		SHEET S1-20 OF S1-47 SHEETS		ILLINOIS	FED. AID PROJECT		

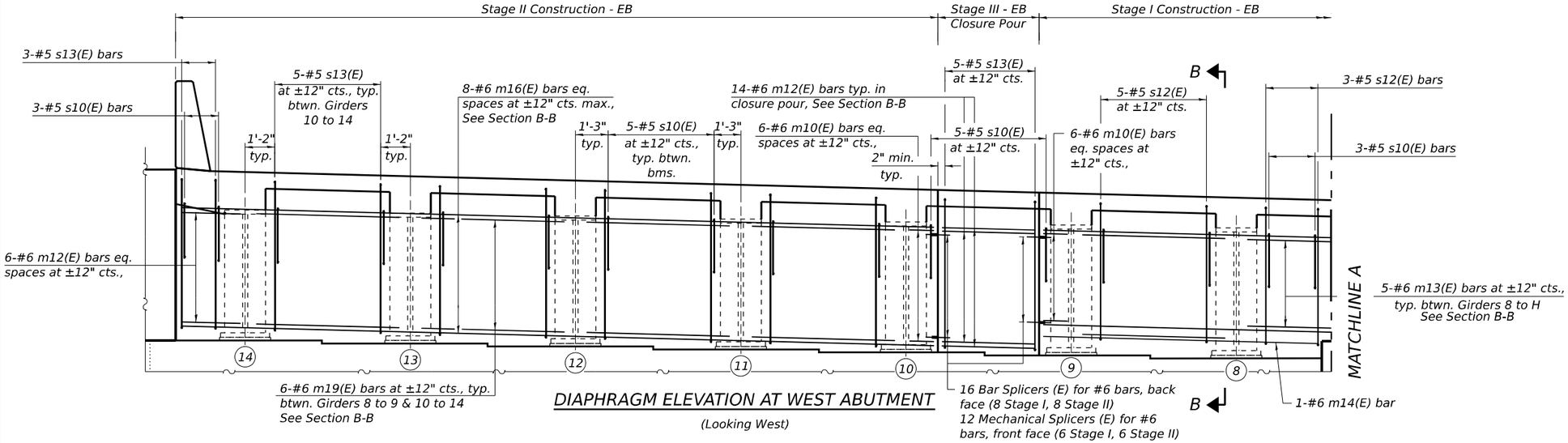

DIAPHRAGM ELEVATION AT WEST ABUTMENT

(Looking West)

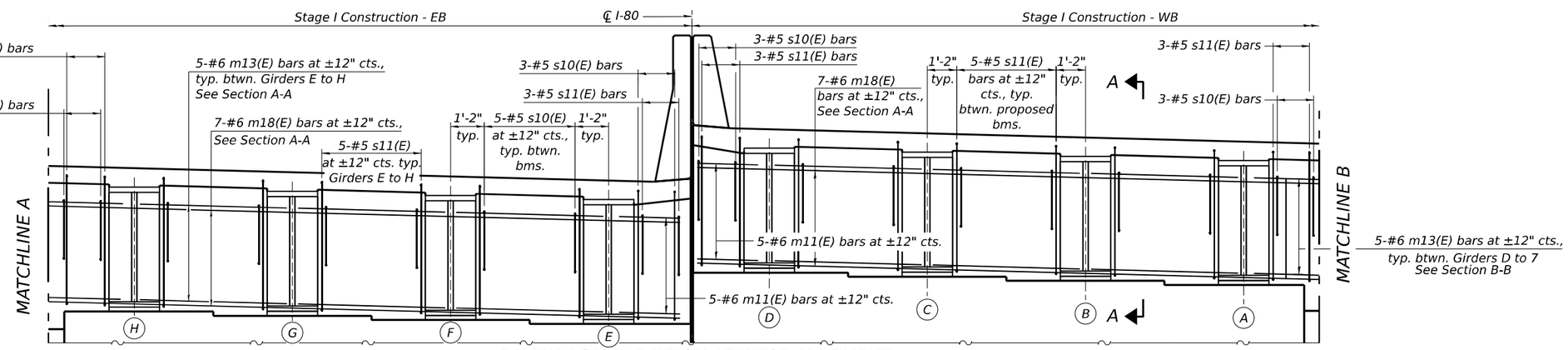

DIAPHRAGM ELEVATION AT WEST ABUTMENT

(Looking West)

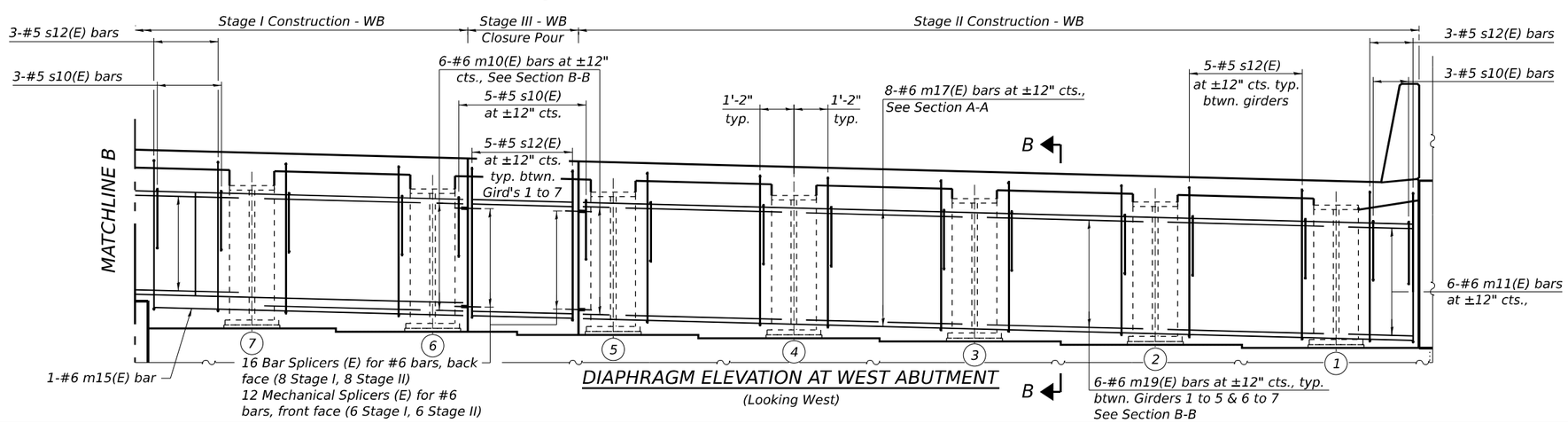

DIAPHRAGM ELEVATION AT WEST ABUTMENT

(Looking West)

Notes:
For Sections A-A and B-B, see sheet S1-23 of S1-47
See sheets S1-23 , S1-24 of S1-47 for
superstructure details and bill of material.
The s10(E) thru s13(E) bars shall be placed
parallel to the beams. Spacing for these bars
shall be at right angles to the beams.

MODEL: Drawing View
FILE NAME: pw://transystems-pw.bentley.com:transyscorp-pw1-hosted/Documents/Projects_2018/CH401/401118002 2/02-TranSystems/CAD/62R27/Sheets/23-Structural/099-0301 & 099-0302/0990301-62R27-021-WAbutDiaphragm.dgn

TRANSYSTEMS	USER NAME = amkluver	DESIGNED - SN	REVISED -	STATE OF ILLINOIS DEPARTMENT OF TRANSPORTATION	WEST ABUTMENT DIAPRHAGM STRUCTURE NOS. 099-0301 (EB) & 099-0302 (WB)	F.A.I. RTE.	SECTION	COUNTY	TOTAL SHEETS / SHEET NO.
		CHECKED - TJJ	REVISED -			I-80	FAI 80 21 STRUCTURE 6	WILL	898 / 532
	PLOT SCALE = NTS	DRAWN - SN	REVISED -					CONTRACT NO. 62R27	
	PLOT DATE = 6/23/2023	CHECKED - TJJ	REVISED -		SHEET S1-21 OF S1-47 SHEETS		ILLINOIS	FED. AID PROJECT	

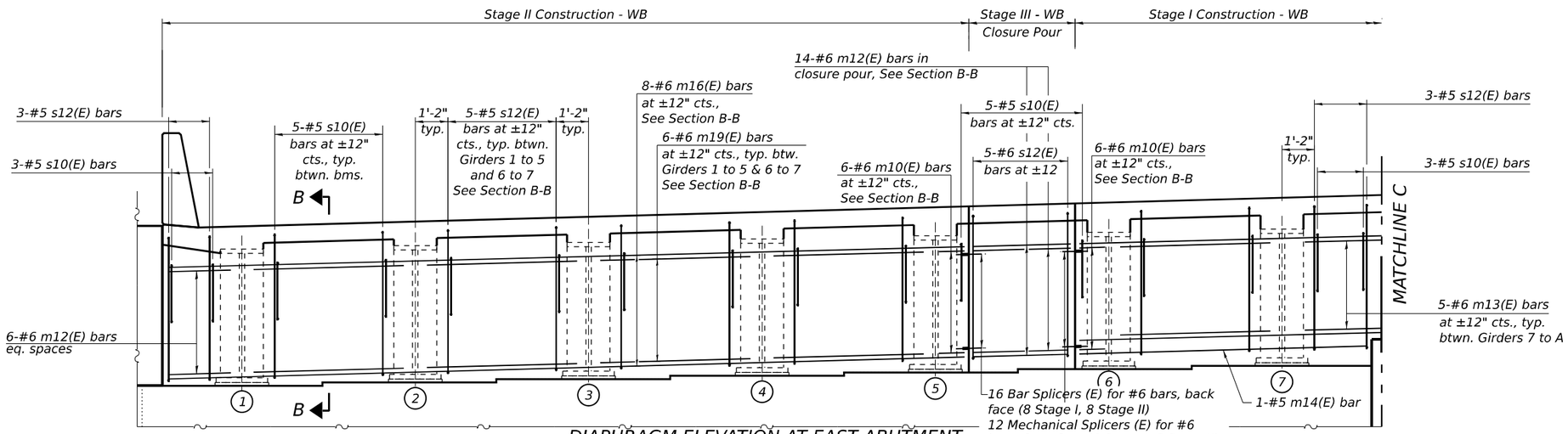

DIAPHRAGM ELEVATION AT EAST ABUTMENT

(Looking East)

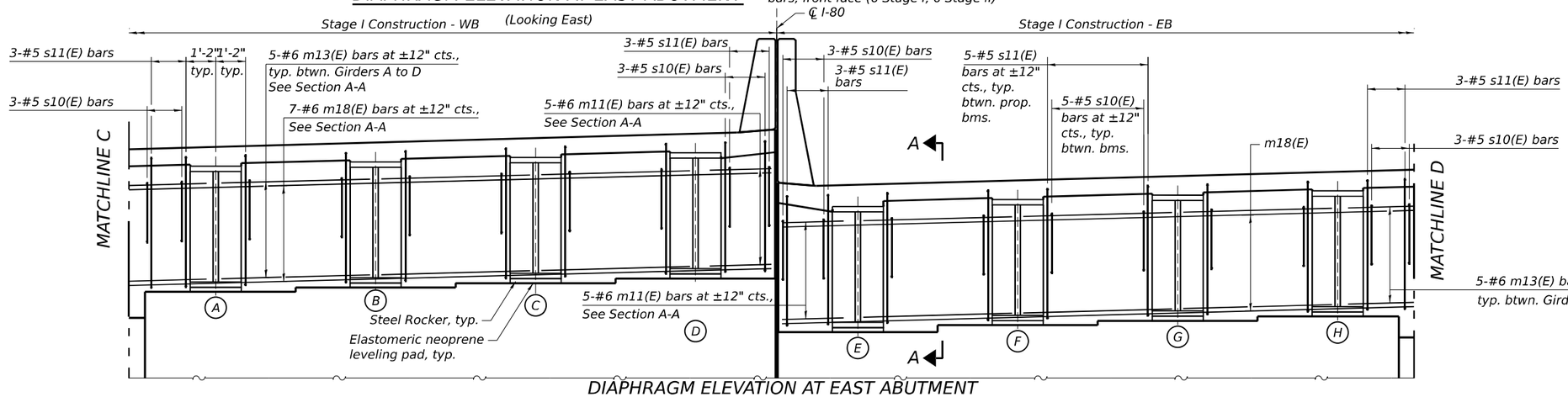

DIAPHRAGM ELEVATION AT EAST ABUTMENT

(Looking East)

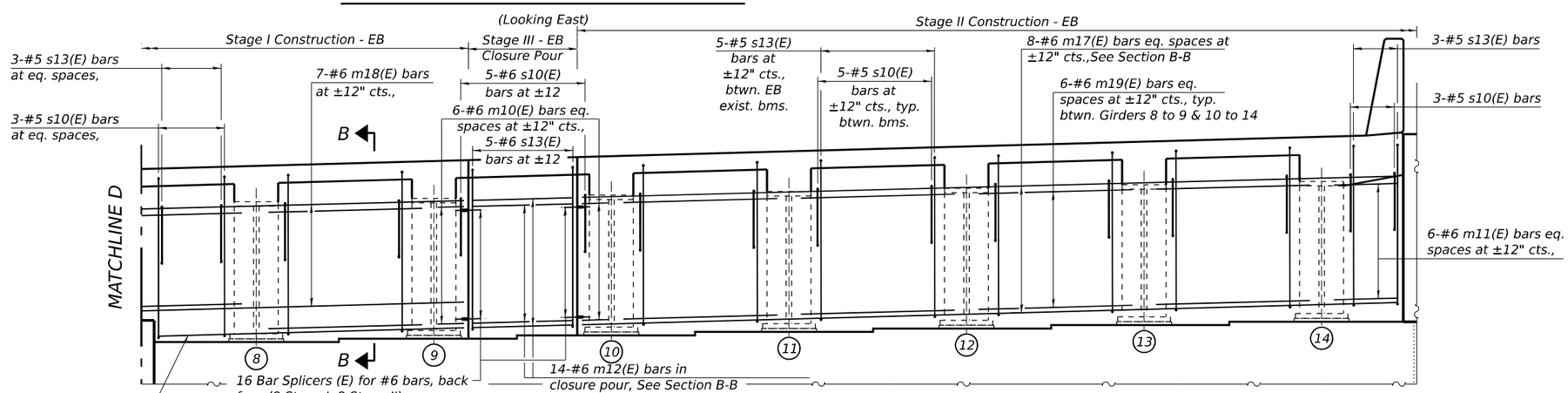

DIAPHRAGM ELEVATION AT EAST ABUTMENT

(Looking East)

Notes:
For Sections A-A and B-B, see sheet S1-23 of S1-47
See sheets S1-23 , S1-24 of S1-47 for superstructure details and bill of material.
The s10(E) thru s13(E) bars shall be placed parallel to the beams. Spacing for these bars shall be at right angles to the beams.

MODEL: Drawing View
FILE NAME: pw://transystems-pw.bentley.com:transyscorp-pw1-hosted/Documents/Projects_2018/CH401/401180022/02-TranSystems/CAD/62R27/Sheets/23-Structural/099-0301 & 099-0302/09903O1-62R27-022-EAbutDiaphragm.dgn

TRANSYSTEMS	USER NAME = tjallen	DESIGNED - SN	REVISED -	STATE OF ILLINOIS DEPARTMENT OF TRANSPORTATION	EAST ABUTMENT DIAPRHAGM STRUCTURE NOS. 099-0301 (EB) & 099-0302 (WB)	F.A.I. RTE.	SECTION	COUNTY	TOTAL SHEETS	SHEET NO.
		CHECKED - TJJ	REVISED -			I-80	FAI 80 21 STRUCTURE 6	WILL		533
	PLOT SCALE = NTS	DRAWN - SN	REVISED -					CONTRACT NO. 62R27		
	PLOT DATE = 6/22/2023	CHECKED - TJJ	REVISED -		SHEET S1-22 OF S1-47 SHEETS		ILLINOIS	FED. AID PROJECT		

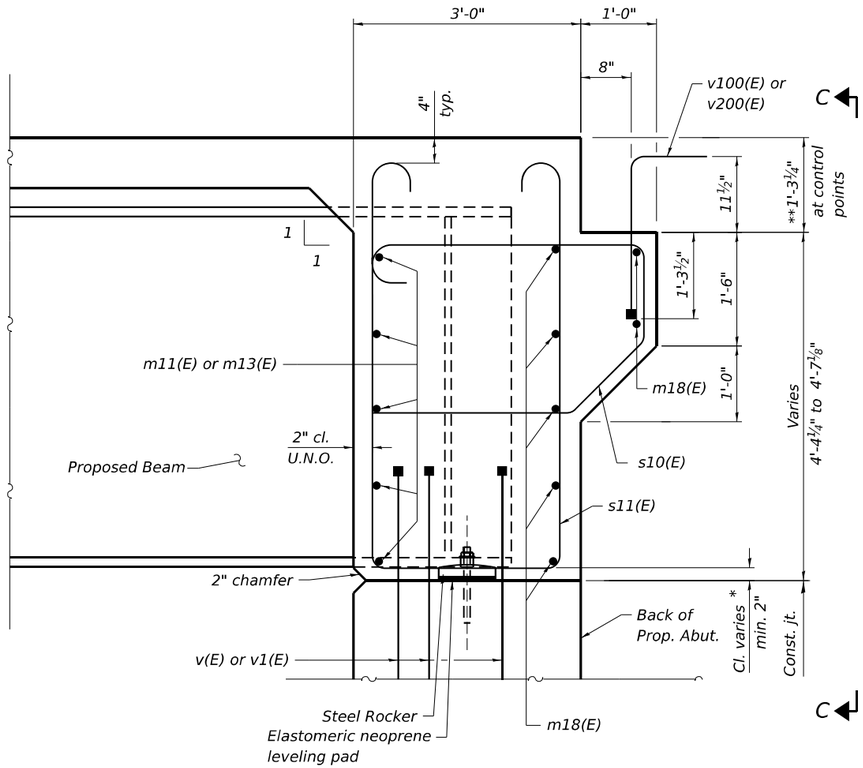

SECTION A-A

(at Rt. ∠s)

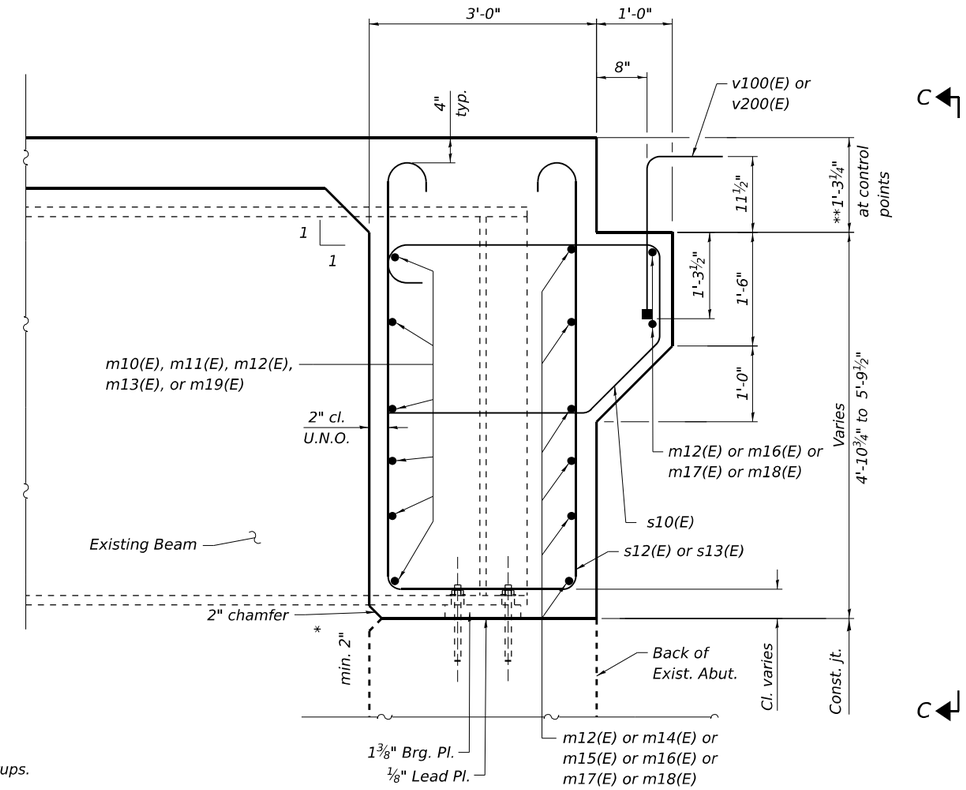

SECTION B-B

(at Rt. ∠s)
See section C-C on sheet S1-39 and S1-41 of S1-47 for v2(E) bar locations.

* See elevation view for location of stirrups.
** Prior to Grinding

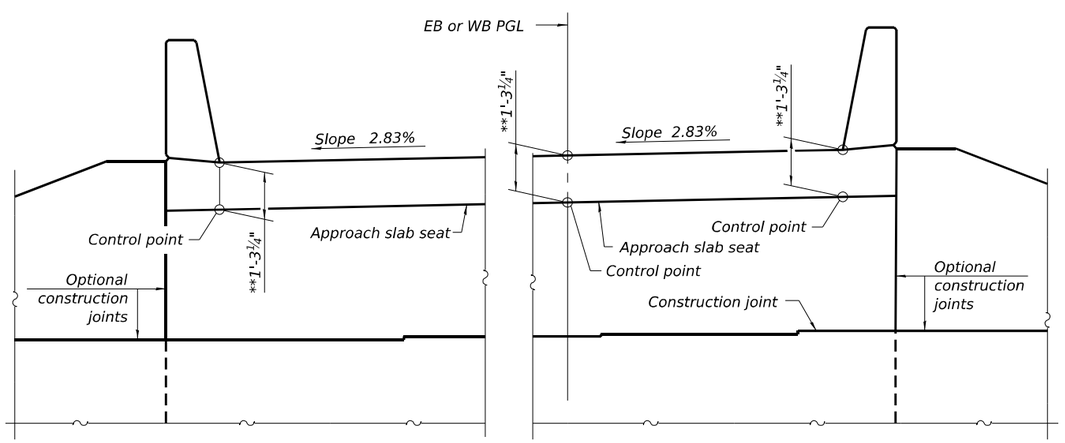

VIEW C-C

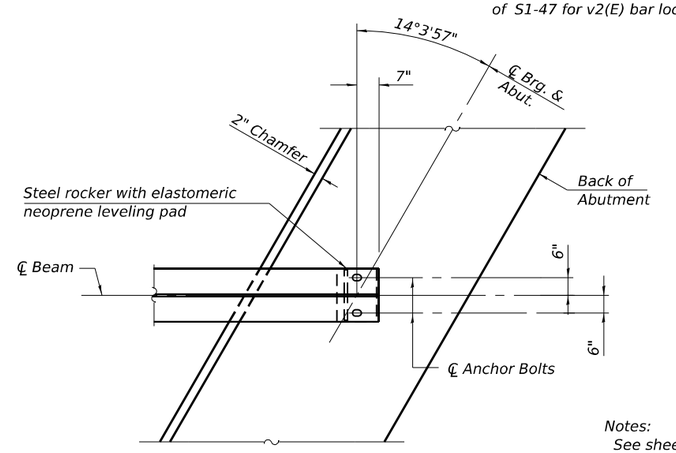

PLAN AT ABUTMENT

(Showing bottom flange of beam)

Notes:
See sheets S1-03, S1-21, S1-22, S1-24 of S1-47 for superstructure details and Bill of Material.
The s10(E) and s11(E) bars shall be placed parallel to the beams. Spacing for these bars shall be at right angles to the beams.
The approach slab seat shall have a constant slope determined from the control points shown.

MODEL: Untitled
FILE NAME: pw://transystems-pw.bentley.com:transyscorp-pw1-hosted/Documents/Projects_2018/CH401/401180022/02-TranSystems/CAD/62R27/Sheets/23-Structural/099-0301 & 099-0302/0990301-62R27-023-SuperstructureDetails1.dgn

TRANSYSTEMS	USER NAME = amkluver	DESIGNED - ESS	REVISED -	STATE OF ILLINOIS DEPARTMENT OF TRANSPORTATION	SUPERSTRUCTURE DETAILS 1 STRUCTURE NOS. 099-0301 (EB) & 099-0302 (WB)
		CHECKED - AMD	REVISED -		
	PLOT SCALE = NTS	DRAWN - TJA	REVISED -		
	PLOT DATE = 6/23/2023	CHECKED - AMD	REVISED -		SHEET S1-23 OF S1-47 SHEETS

F.A.I. RTE.	SECTION	COUNTY	TOTAL SHEETS	SHEET NO.
I-80	FAI 80 21 STRUCTURE 6	WILL	898	534
		CONTRACT NO. 62R27		
	ILLINOIS	FED. AID PROJECT		

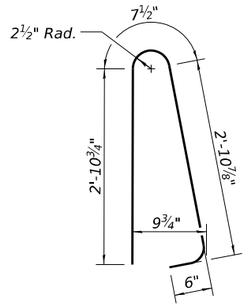

BAR d100(E) & d200(E)

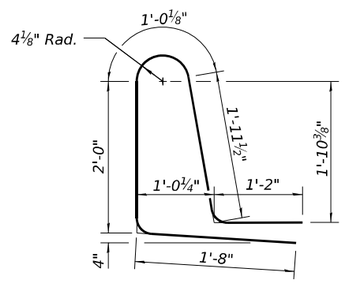

BAR d101(E) & d201(E)

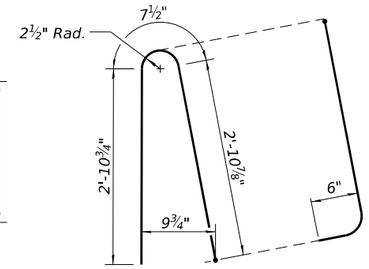

BAR d102(E)

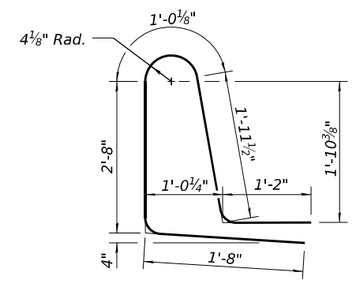

BAR d203(E)

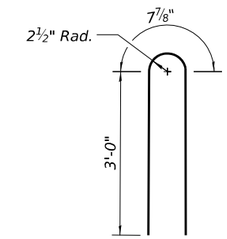

BAR d202(E)

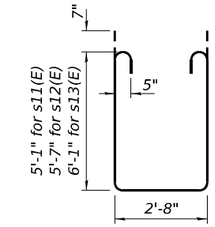

BAR s11(E) & s12(E) & s13(E)

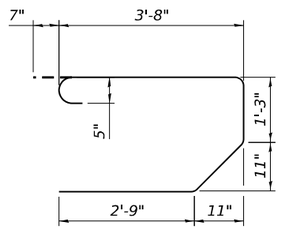

BAR s10(E)

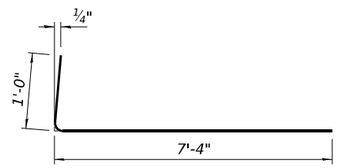

BAR a109(E) & a209(E)

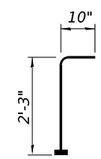

BAR v100(E) & v200(E)

(Headed)

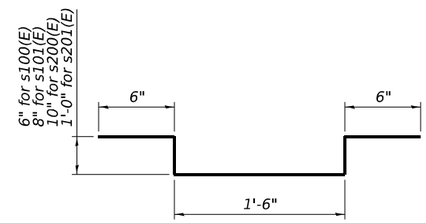

BAR s100(E), s101(E), s200(E), & s201(E)

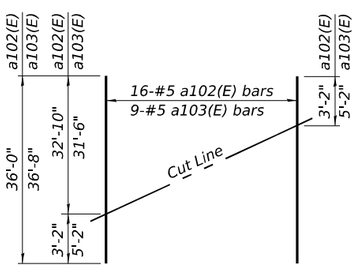

FIELD CUTTING DIAGRAM

Order a102(E) and a103(E) bars full length. Cut as shown and use remainder of bars in opposite end of deck.

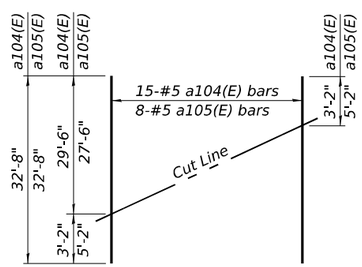

FIELD CUTTING DIAGRAM

Order a104(E) and a105(E) bars full length. Cut as shown and use remainder of bars in opposite end of deck.

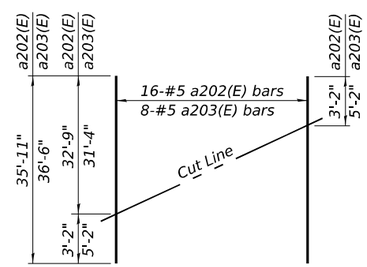

FIELD CUTTING DIAGRAM

Order a202(E) and a203(E) bars full length. Cut as shown and use remainder of bars in opposite end of deck.

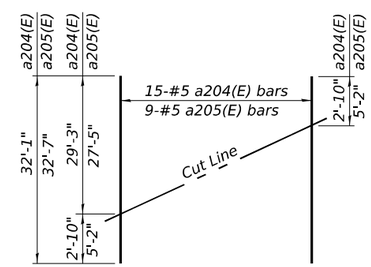

FIELD CUTTING DIAGRAM

Order a204(E) and a205(E) bars full length. Cut as shown and use remainder of bars in opposite end of deck.

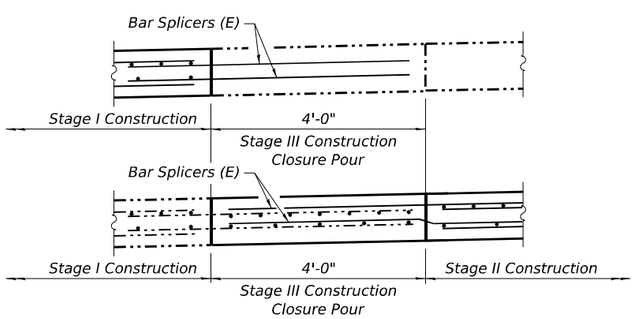

CLOSURE POUR DETAIL

Note:
Headed bars shall conform to ASTM A970 with threaded attachment; Class HA; and reinforment bars conforming to ASTM A706. Cost included with Reinforement Bars, Epoxy Coated

SUPERSTRUCTURE BILL OF MATERIAL (WB)

Bar	No.	Size	Length	Shape
a100(E)	450	#5	34'-10"	
a101(E)	452	#5	30'-1"	
a102(E)	16	#5	36'-0"	
a103(E)	9	#5	36'-8"	
a104(E)	15	#5	32'-8"	
a105(E)	8	#5	32'-8"	
a106(E)	4	#5	35'-9"	
a107(E)	4	#5	31'-0"	
a108(E)	4	#5	3'-8"	
a109(E)	446	#6	8'-4"	
b100(E)	370	#5	32'-7"	
b101(E)	342	#5	27'-9"	
b102(E)	84	#4	26'-10"	
d100(E)	225	#5	7'-0"	
d101(E)	450	#5	7'-10"	
d102(E)	225	#5	7'-0"	
e100(E)	128	#4	18'-3"	
e101(E)	40	#4	31'-9"	
s100(E)	576	#4	3'-6"	
s101(E)	432	#4	3'-10"	
v100(E)	142	#5	3'-10"	
m10(E)	24	#6	1'-0"	
m11(E)	16	#6	2'-10"	
m12(E)	34	#6	3'-10"	
m13(E)	40	#6	5'-10"	
m14(E)	1	#6	11'-6"	
m15(E)	1	#6	11'-4"	
m16(E)	8	#6	31'-2"	
m17(E)	8	#6	31'-8"	
m18(E)	14	#6	35'-10"	
m19(E)	60	#6	6'-4"	
s10(E)	114	#5	9'-7"	
s11(E)	42	#5	14'-0"	
s12(E)	72	#5	15'-0"	
Floor Drains			Each	2
Concrete Superstructure			Cu. Yds.	434.9
Protective Coat			Sq. Yd.	1,252
Reinforcement Bars, Epoxy Coated			Lbs.	81,900
Bridge Deck Grooving (Longitudinal)			Sq. Yd.	597
Diamond Grinding (Bridge Section)			Sq. Yd.	1,039

SUPERSTRUCTURE BILL OF MATERIAL (EB)

Bar	No.	Size	Length	Shape
a200(E)	450	#5	34'-11"	
a201(E)	452	#5	30'-1"	
a202(E)	16	#5	35'-11"	
a203(E)	8	#5	36'-6"	
a204(E)	15	#5	32'-1"	
a205(E)	9	#5	32'-7"	
a206(E)	4	#5	35'-9"	
a207(E)	4	#5	31'-0"	
a208(E)	4	#5	3'-8"	
a209(E)	594	#6	8'-4"	
b200(E)	355	#5	32'-7"	
b201(E)	342	#5	27'-9"	
b202(E)	84	#4	26'-10"	
d200(E)	450	#5	7'-0"	
d201(E)	450	#5	7'-10"	
d202(E)	225	#5	6'-8"	
d203(E)	225	#5	8'-6"	
e100(E)	160	#4	18'-3"	
e101(E)	40	#4	31'-9"	
s200(E)	432	#4	4'-2"	
s201(E)	576	#4	4'-6"	
v200(E)	142	#5	3'-1"	
m10(E)	24	#6	1'-0"	
m11(E)	16	#6	2'-10"	
m12(E)	34	#6	3'-10"	
m13(E)	40	#6	5'-10"	
m14(E)	1	#6	11'-6"	
m15(E)	1	#6	11'-4"	
m16(E)	8	#6	31'-2"	
m17(E)	8	#6	31'-8"	
m18(E)	14	#6	35'-10"	
m19(E)	60	#6	6'-4"	
s10(E)	114	#5	9'-7"	
s11(E)	42	#5	14'-0"	
s12(E)	8	#5	15'-0"	
s13(E)	64	#5	16'-0"	
Floor Drains			Each	2
Concrete Superstructure			Cu. Yds.	472.4
Protective Coat			Sq. Yd.	1,287
Reinforcement Bars, Epoxy Coated			Lbs.	85,910
Preformed Joint Seal 3 1/2"			Foot	210
Bridge Deck Grooving (Longitudinal)			Sq. Yd.	597
Diamond Grinding (Bridge Section)			Sq. Yd.	1,039

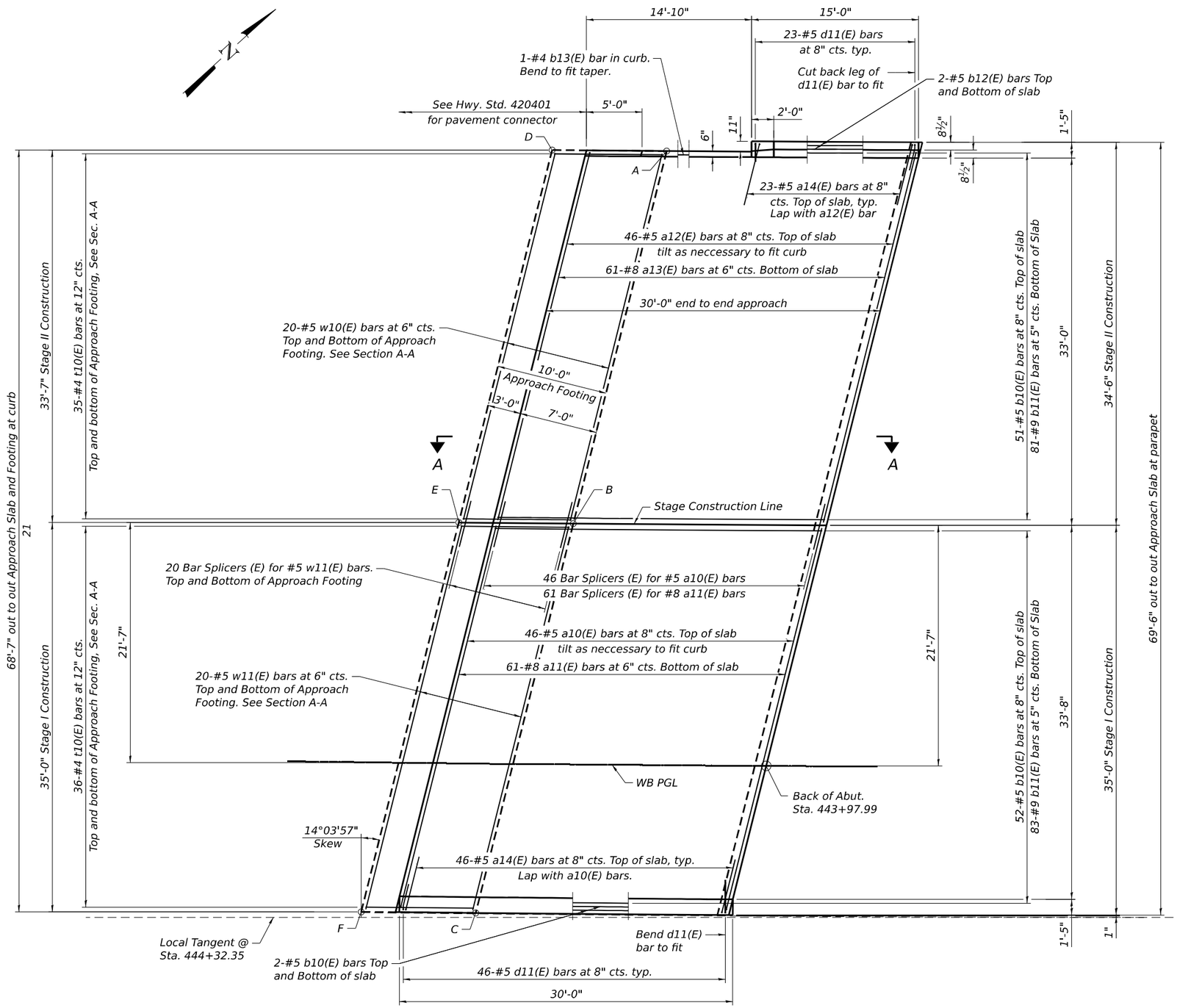

WEST APPROACH PLAN - WESTBOUND

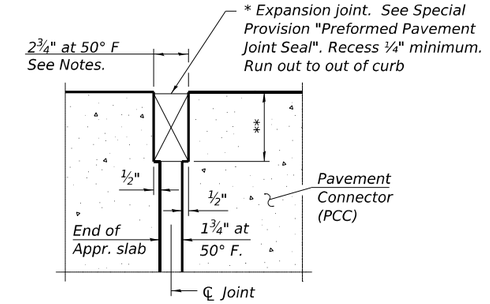

DETAIL A

(at Rt. ∠'s)

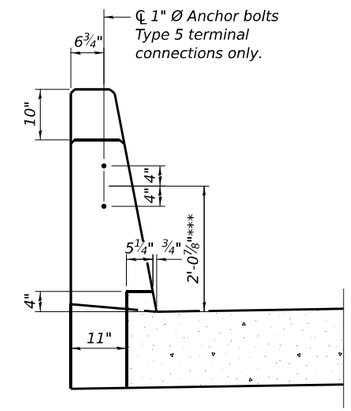

VIEW B-B

APPROACH FOOTING ELEVATIONS

Point	WB W Approach	
	Top	Bottom
A	603.37	602.54
B	604.25	603.42
C	605.15	604.31
D	603.30	602.47
E	604.18	603.35
F	605.07	604.24

Notes:

See sheet S1-29 of S1-47 for Section A-A and Inside Elevation of Median Parapet (WB).

See sheet S1-30 of S1-47 for Cross Sections, Inside Elevation of Exterior Parapet and Curb, bar bends, and Westbound Bill of Materials.

a10(E) thru a14(E) bar spacings measured along WB PGL I-80.

* Cost included with Concrete Superstructure (Approach Slab).

** Per manufacturer recommendations

*** Dimension after grinding

MODEL: Drawing
FILE NAME: pw://transystems-pw.bentley.com:transyscorp-pw1-hosted/Documents/Projects_2018/CH401/401180022/02-TranSystems/CAD/62R27/Sheets/23-Structural/099-0301 & 099-0302/09900301-62R27-025-ApprSlab_Details1.dgn

TRANSYSTEMS

USER NAME = amkluver	DESIGNED - IS	REVISED -	
	CHECKED - WJC	REVISED -	
PLOT SCALE = NTS	DRAWN - IS	REVISED -	
PLOT DATE = 6/23/2023	CHECKED - WJC	REVISED -	

STATE OF ILLINOIS
DEPARTMENT OF TRANSPORTATION

APPROACH SLAB DETAILS 1
STRUCTURE NOS. 099-0301 (EB) & 099-0302 (WB)

SHEET S1-25 OF S1-47 SHEETS

F.A.I. RTE.	SECTION	COUNTY	TOTAL SHEETS	SHEET NO.
I-80	FAI 80 21 STRUCTURE 6	WILL	898	536
		CONTRACT NO. 62R27		
		ILLINOIS FED. AID PROJECT		

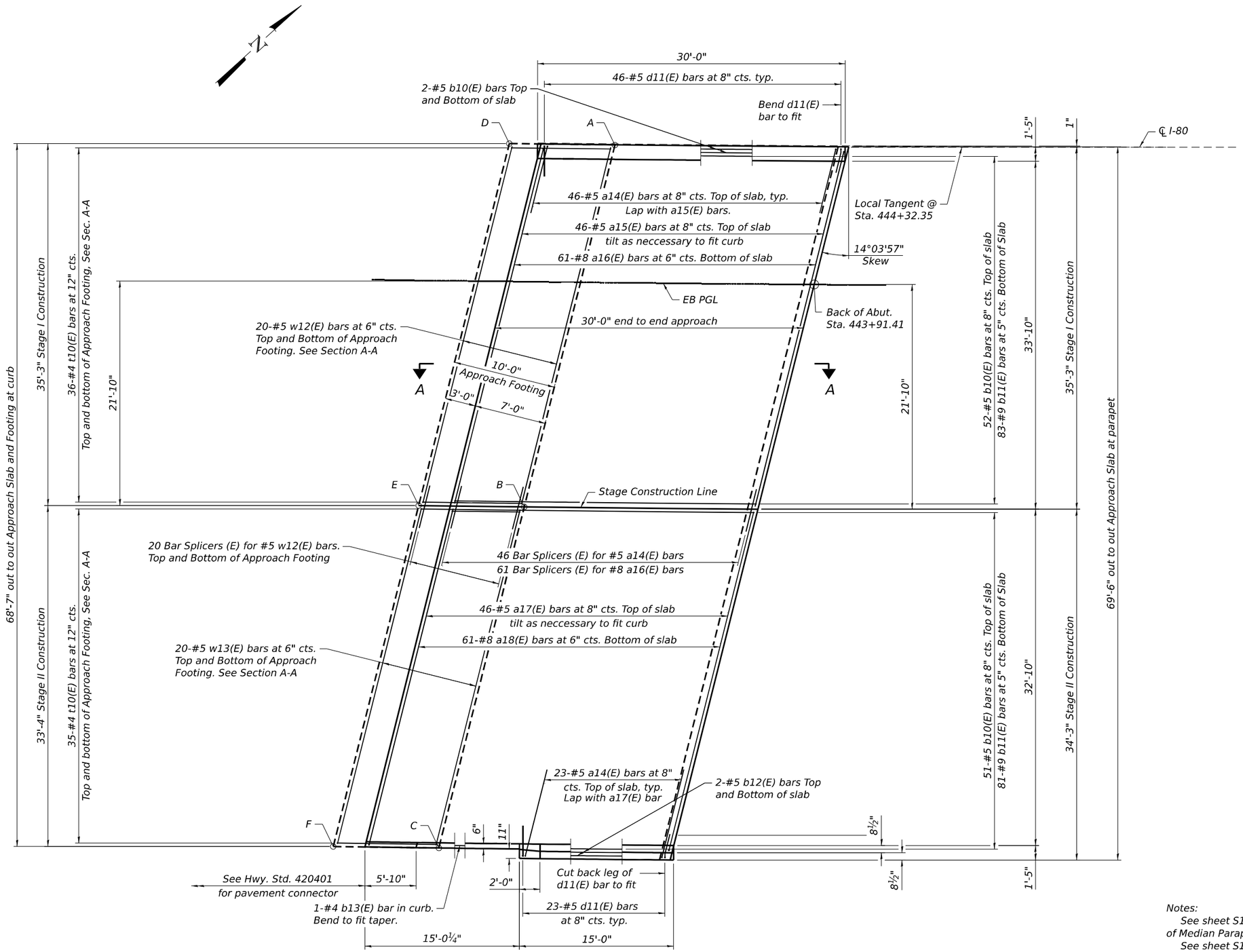

WEST APPROACH PLAN - EASTBOUND

APPROACH FOOTING ELEVATIONS

Point	EB W Approach	
	Top	Bottom
A	603.05	602.21
B	603.95	603.12
C	604.83	603.99
D	602.98	602.15
E	603.88	603.05
F	604.77	603.94

Notes:

See sheet S1-29 of S1-47 for Cross Section, Section A-A, Inside Elevation of Median Parapet (EB), and Eastbound Bill of Materials.

See sheet S1-30 of S1-47 for Inside Elevation of Exterior Parapet and Curb, and bar bends.

a14(E) thru a18(E) bar spacings measured along EB PGL I-80.

MODEL: Drawing
FILE NAME: pw://transystems-pw.bentley.com:transyscorp-pw1-hosted/Documents/Projects_2018/CH401/401180022/02-TranSystems/CAD/62R27/Sheets/23-Structural/099-0301 & 099-0302/0990301-62R27-026-ApprSlab_Details2.dgn

TRANSYSTEMS

USER NAME = amkluver	DESIGNED - IS	REVISED -	
	CHECKED - WJC	REVISED -	
PLOT SCALE = NTS	DRAWN - IS	REVISED -	
PLOT DATE = 6/23/2023	CHECKED - WJC	REVISED -	

STATE OF ILLINOIS
DEPARTMENT OF TRANSPORTATION

APPROACH SLAB DETAILS 2
STRUCTURE NOS. 099-0301 (EB) & 099-0302 (WB)

SHEET S1-26 OF S1-47 SHEETS

F.A.I. RTE.	SECTION	COUNTY	TOTAL SHEETS	SHEET NO.
I-80	FAI 80 21 STRUCTURE 6	WILL	898	537
		CONTRACT NO. 62R27		
		ILLINOIS FED. AID PROJECT		

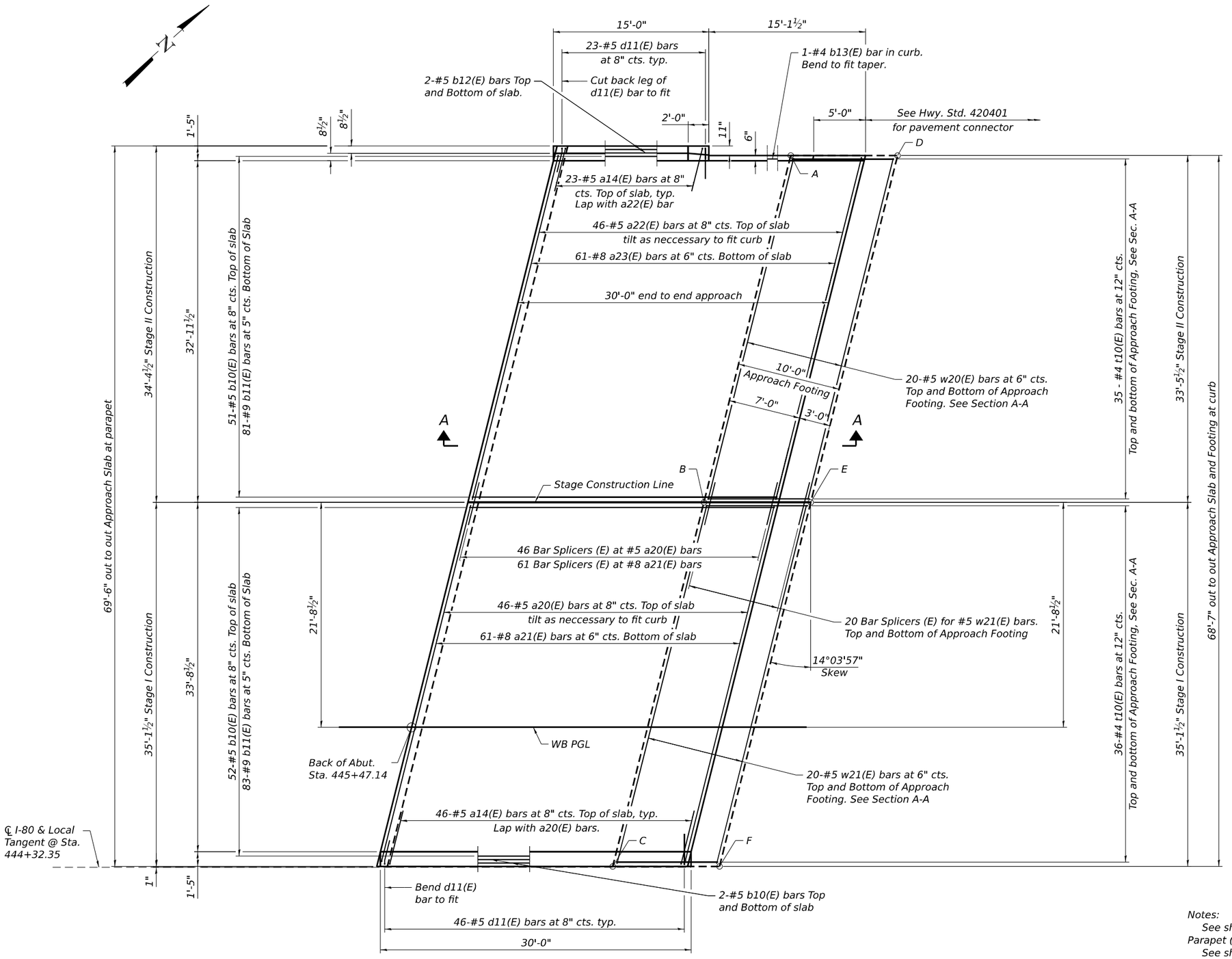

EAST APPROACH PLAN - WESTBOUND

APPROACH FOOTING ELEVATIONS

Point	WB E Approach	
	Top	Bottom
A	603.84	603.01
B	604.78	603.95
C	605.75	604.91
D	603.82	602.99
E	604.77	603.93
F	605.73	604.90

Notes:

See sheet S1-29 of S1-47 for Section A-A and Inside Elevation of Median Parapet (WB).

See sheet S1-30 of S1-47 for Cross Sections, Inside Elevation of Exterior Parapet and Curb, bar bends, and Westbound Bill of Materials.

a14(E) and a20(E) thru a23(E) bar spacings measured along WB PGL I-80.

MODEL: Drawing
FILE NAME: pw://transystems-pw.bentley.com:transyscorp-pw1-hosted/Documents/Projects_2018/CH401/401180022/02-TranSystems/CAD/62R27/Sheets/23-Structural/099-0301 & 099-0302/0990301-62R27-027-ApprSlab_Details3.dgn

TRANSYSTEMS

USER NAME = amkluver	DESIGNED - IS	REVISED -	
	CHECKED - WJC	REVISED -	
PLOT SCALE = NTS	DRAWN - IS	REVISED -	
PLOT DATE = 6/23/2023	CHECKED - WJC	REVISED -	

STATE OF ILLINOIS
DEPARTMENT OF TRANSPORTATION

APPROACH SLAB DETAILS 3
STRUCTURE NOS. 099-0301 (EB) & 099-0302 (WB)

SHEET S1-27 OF S1-47 SHEETS

F.A.I. RTE.	SECTION	COUNTY	TOTAL SHEETS	SHEET NO.
I-80	FAI 80 21 STRUCTURE 6	WILL	898	538
		CONTRACT NO. 62R27		
		ILLINOIS	FED. AID PROJECT	

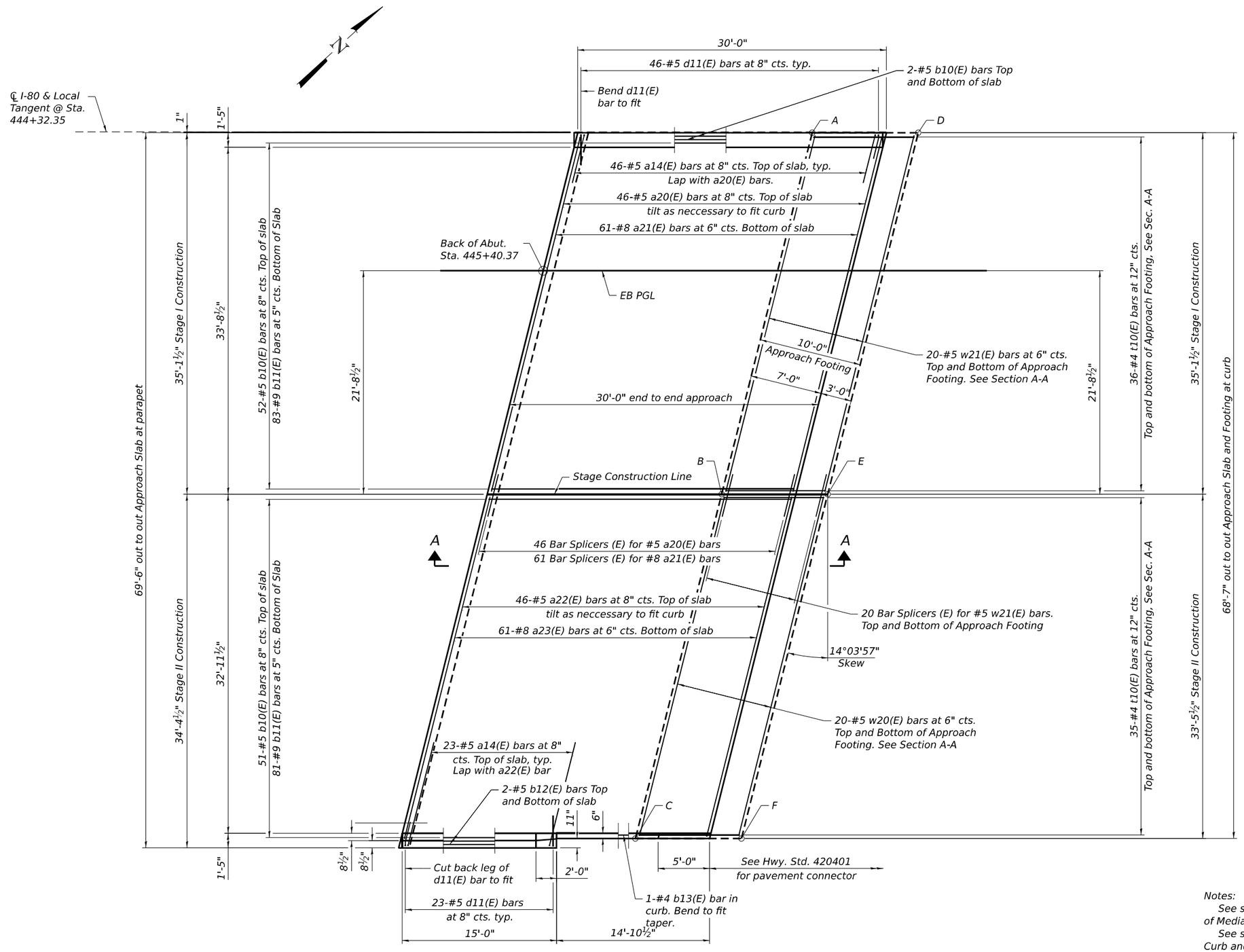

EAST APPROACH PLAN - EASTBOUND

APPROACH FOOTING ELEVATIONS

Point	EB E Approach	
	Top	Bottom
A	603.68	602.85
B	604.63	603.80
C	605.56	604.73
D	603.68	602.85
E	604.64	603.80
F	605.57	604.73

Notes:

See sheet S1-29 of S1-47 for Cross Sections, Section A-A, Inside Elevation of Median Parapet (EB), and Eastbound Bill of Materials.

See sheet S1-30 of S1-47 for Inside Elevation of Exterior Parapet and Curb and bar bends.

a14(E) and a20(E) thru a23(E) bar spacings measured along EB PGL I-80.

MODEL: Drawing
FILE NAME: pw://transystems-pw.bentley.com:transyscorp-pw1-hosted/Documents/Projects_2018/CH401/401180022/02-TranSystems/CAD/62R27/Sheets/23-Structural/099-0301 & 099-0302/0990301-62R27-028-ApprSlab_Details4.dgn

TRANSYSTEMS

USER NAME = amkluver	DESIGNED - IS	REVISED -	
	CHECKED - WJC	REVISED -	
PLOT SCALE = NTS	DRAWN - IS	REVISED -	
PLOT DATE = 6/23/2023	CHECKED - WJC	REVISED -	

STATE OF ILLINOIS
DEPARTMENT OF TRANSPORTATION

APPROACH SLAB DETAILS 4
STRUCTURE NOS. 099-0301 (EB) & 099-0302 (WB)

SHEET S1-28 OF S1-47 SHEETS

F.A.I. RTE.	SECTION	COUNTY	TOTAL SHEETS	SHEET NO.
I-80	FAI 80 21 STRUCTURE 6	WILL	898	539
		CONTRACT NO. 62R27		
		ILLINOIS	FED. AID PROJECT	

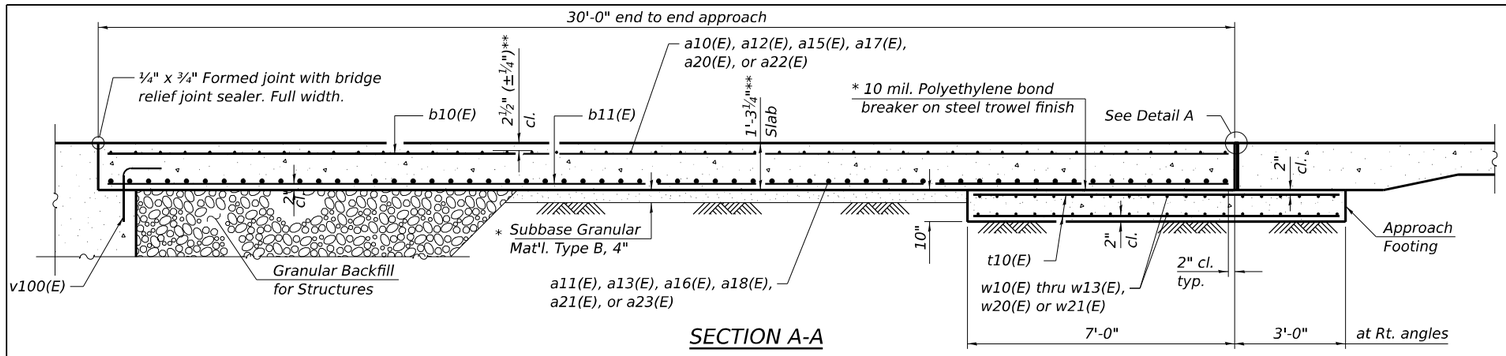

SECTION A-A

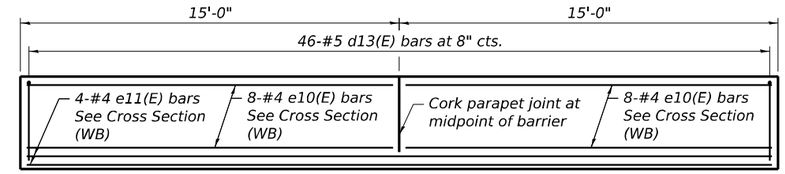

INSIDE ELEVATION OF MEDIAN PARAPET (WB)

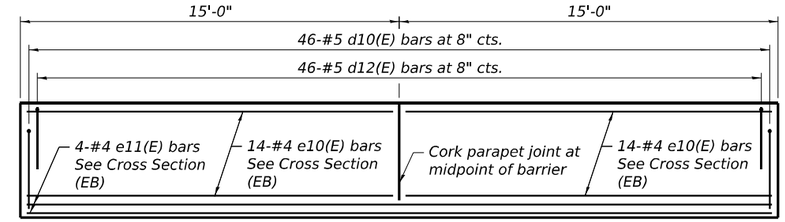

INSIDE ELEVATION OF MEDIAN PARAPET (EB)

Notes:

See sheet S1-25 of S1-47 for Detail A.

See sheet S1-30 of S1-47 for bar bends and Westbound Bill of Materials.

For Granular Backfill for Structures and drainage treatment details, see sheet S1-03 of S1-47.

* Cost included with Concrete Superstructure (Approach Slab).
** Prior to grinding
*** Dimension after grinding
**** 2'-1⅛" to 2'-1⅜" (West Approach) and 2'-0⅝" to 2'-1" (East Approach)
***** 5'-9⅛" to 5'-9⅜" (West Approach) and 5'-8⅝" to 5'-9" (East Approach)

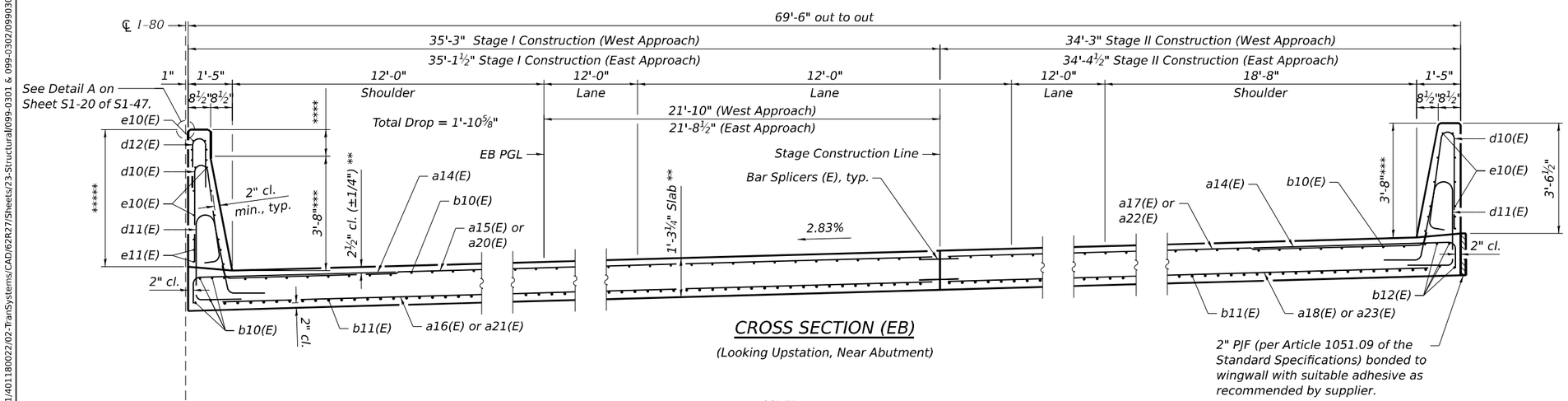

CROSS SECTION (EB)

(Looking Upstation, Near Abutment)

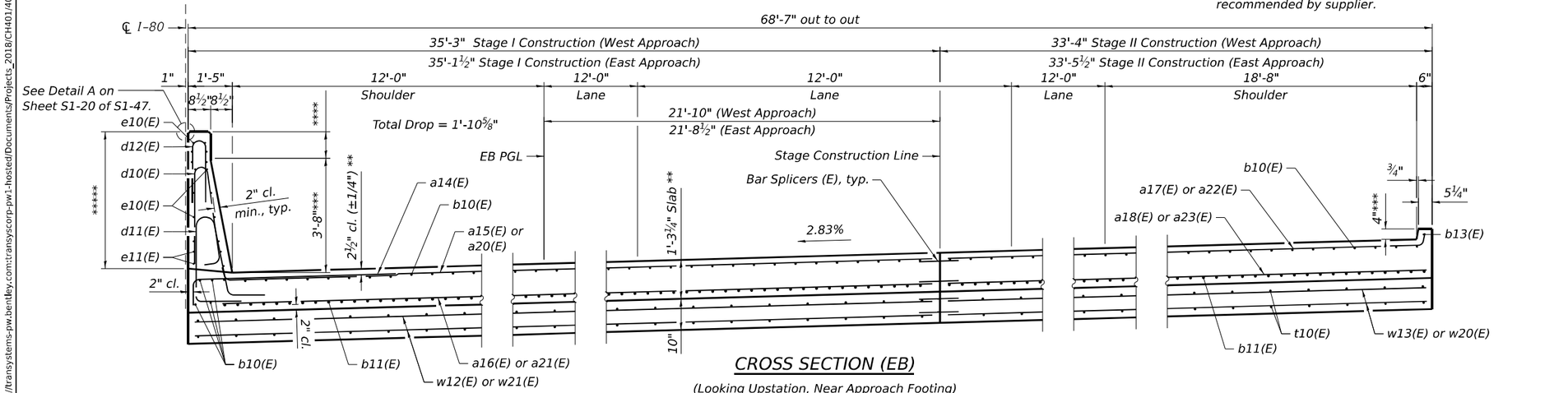

CROSS SECTION (EB)

(Looking Upstation, Near Approach Footing)

EASTBOUND BILL OF MATERIAL

Bar	No.	Size	Length	Shape
a14(E)	138	#5	7'-4"	
a15(E)	46	#5	35'-4"	
a16(E)	61	#8	34'-10"	
a17(E)	46	#5	34'-2"	
a18(E)	61	#8	33'-8"	
a20(E)	46	#5	35'-3"	
a21(E)	61	#8	34'-9"	
a22(E)	46	#5	34'-5"	
a23(E)	61	#8	33'-11"	
b10(E)	214	#5	29'-8"	
b11(E)	328	#9	29'-8"	
b12(E)	8	#5	14'-8"	
b13(E)	2	#4	14'-8"	
d10(E)	138	#5	7'-0"	
d11(E)	138	#5	8'-7"	
d12(E)	92	#5	6'-8"	
e10(E)	80	#4	14'-8"	
e11(E)	8	#4	29'-8"	
t10(E)	284	#4	10'-0"	
w12(E)	40	#5	35'-11"	
w13(E)	40	#5	33'-10"	
w20(E)	40	#5	34'-1"	
w21(E)	40	#5	35'-10"	
Concrete Structures		Cu. Yd.	44.7	
Concrete Superstructure		Cu. Yd.	16.2	
Protective Coat		Sq. Yd.	510	
Concrete Superstructure (Approach Slab)		Cu. Yd.	195.2	
Reinforcement Bars, Epoxy Coated		Pound	81,480	
Bridge Deck Grooving (Longitudinal)		Sq. Yd.	240	
Diamond Grinding (Bridge Section)		Sq. Yd.	574	

MODEL: Untitled
FILE NAME: pw://transystems-pw.bentley.com:transyscorp-pw1-hosted/Documents/Projects_2018/CH401/401180022/02-TranSystems/CAD/62R27/Sheets/23-Structural/099-0301 & 099-0302/0990301-62R27-029-ApprSlab_Details5.dgn

TRANSYSTEMS

USER NAME = amkluver	DESIGNED - IS	REVISED -	
	CHECKED - WJC	REVISED -	
PLOT SCALE = NTS	DRAWN - IS	REVISED -	
PLOT DATE = 7/27/2023	CHECKED - WJC	REVISED -	

STATE OF ILLINOIS
DEPARTMENT OF TRANSPORTATION

APPROACH SLAB DETAILS 5
STRUCTURE NOS. 099-0301 (EB) & 099-0302 (WB)

SHEET S1-29 OF S1-47 SHEETS

F.A.I. RTE.	SECTION	COUNTY	TOTAL SHEETS	SHEET NO.
I-80	FAI 80 21 STRUCTURE 6	WILL	898	540
		CONTRACT NO. 62R27		
		ILLINOIS	FED. AID PROJECT	

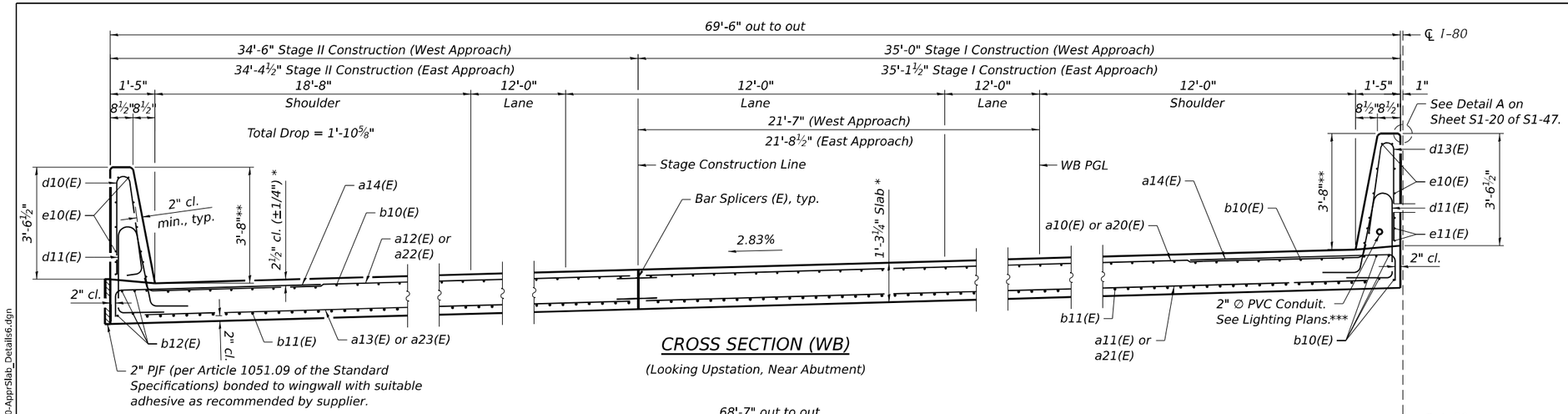

CROSS SECTION (WB)

(Looking Upstation, Near Abutment)

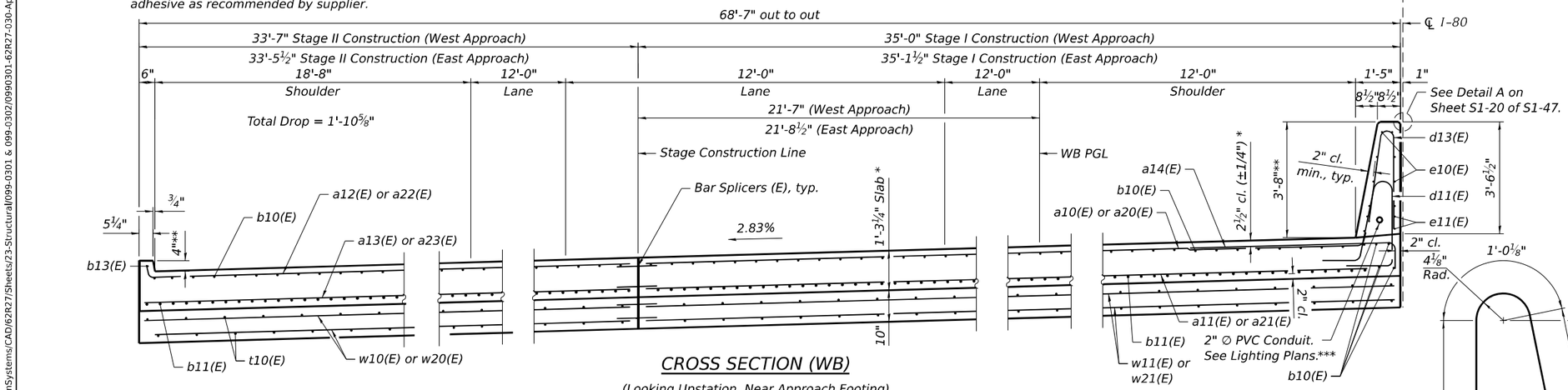

CROSS SECTION (WB)

(Looking Upstation, Near Approach Footing)

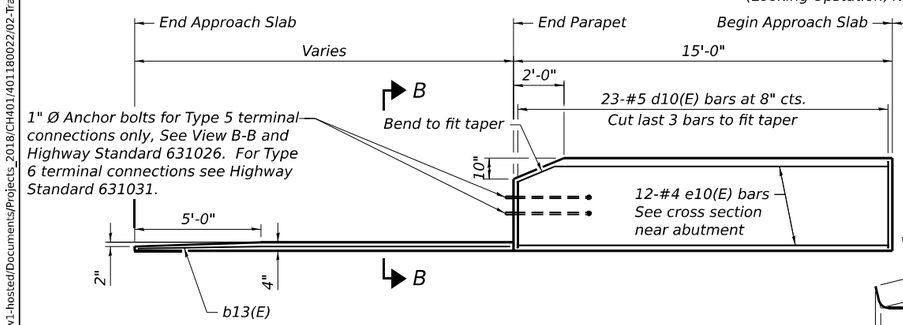

INSIDE ELEVATION OF EXTERIOR PARAPET AND CURB

(Departure End shown, Approach End similar but mirrored)

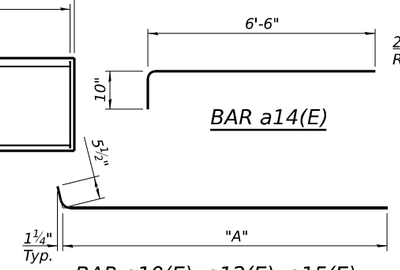

BAR a14(E)

BAR a10(E), a12(E), a15(E), a17(E), a20(E), a22(E)

Bar	"A"
a10(E)	34'-6"
a12(E)	33'-11"
a15(E)	34'-10"
a17(E)	33'-8"
a20(E)	34'-9"
a22(E)	33'-11"

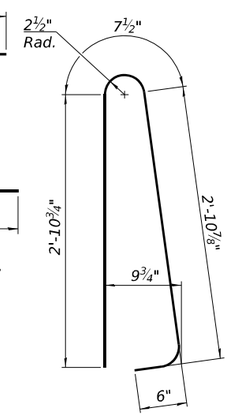

BAR d10(E)

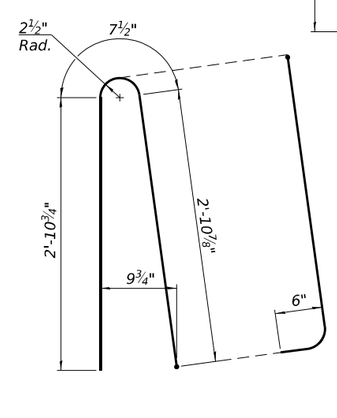

BAR d13(E)

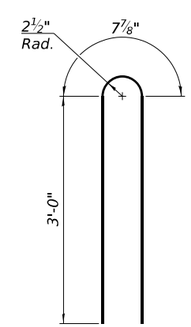

BAR d12(E)

Notes:

See sheet S1-25 of S1-47 for View B-B.

The joint opening shall be adjusted for temperature per Article 520.04 of the Standard Specifications. However, since this detail is for jointless structures, the length of bridge used to calculate the adjustment shall be equal to half the total bridge length plus the length of the bridge approach slab.

Parapet concrete shall be paid for as Concrete Superstructure.

Approach slab shall be paid for as Concrete Superstructure (Approach Slab).

Approach footing concrete shall be paid for as Concrete Structures.

The approach footing maximum applied service bearing pressure (Qmax) = 2.0 ksf.

Cost of excavation for approach footing included with Concrete Structures.

* Prior to grinding

** Dimension after grinding

*** Location of conduit to maintain 1½" cl. from reinforcement

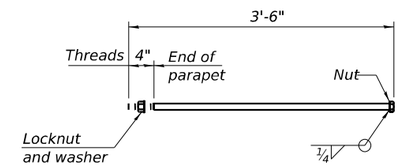

*1" Ø ANCHOR BOLT

(Anchor bolt assemblies shall be galvanized according to Article 1006.09 of the Standard Specifications)

WESTBOUND BILL OF MATERIAL

Bar	No.	Size	Length	Shape
a10(E)	46	#5	35'-0"	
a11(E)	61	#8	34'-6"	
a12(E)	46	#5	34'-5"	
a13(E)	61	#8	33'-11"	
a14(E)	138	#5	7'-4"	
a20(E)	46	#5	35'-3"	
a21(E)	61	#8	34'-9"	
a22(E)	46	#5	34'-5"	
a23(E)	61	#8	33'-11"	
b10(E)	214	#5	29'-8"	
b11(E)	328	#9	29'-8"	
b12(E)	8	#5	14'-8"	
b13(E)	2	#4	14'-8"	
d10(E)	46	#5	7'-0"	
d11(E)	138	#5	8'-7"	
d13(E)	92	#5	7'-0"	
e10(E)	56	#4	14'-8"	
e11(E)	8	#4	29'-8"	
t10(E)	284	#4	10'-0"	
w10(E)	40	#5	34'-1"	
w11(E)	40	#5	35'-8"	
w20(E)	40	#5	34'-1"	
w21(E)	40	#5	35'-10"	
Concrete Structures			Cu. Yd.	44.8
Concrete Superstructure			Cu. Yd.	12.8
Protective Coat			Sq. Yd.	496
Concrete Superstructure (Approach Slab)			Cu. Yd.	195.2
Reinforcement Bars, Epoxy Coated			Pound	80,590
Bridge Deck Grooving (Longitudinal)			Sq. Yd.	240
Diamond Grinding (Bridge Section)			Sq. Yd.	574

MODEL: Untitled
FILE NAME: pw://transystems-pw.bentley.com:transyscorp-pw1-hosted/Documents/Projects_2018/CH401/401180022/02-TranSystems/CAD/62R27/Sheets/23-Structural/099-0301 & 099-0302/0990301-62R27-030-ApprSlab_Details6.dgn

TRANSYSTEMS

USER NAME = amkluver	DESIGNED - IS	REVISED -	
	CHECKED - WJC	REVISED -	
PLOT SCALE = NTS	DRAWN - IS	REVISED -	
PLOT DATE = 7/27/2023	CHECKED - WJC	REVISED -	

STATE OF ILLINOIS
DEPARTMENT OF TRANSPORTATION

APPROACH SLAB DETAILS 6
STRUCTURE NOS. 099-0301 (EB) & 099-0302 (WB)

SHEET S1-30 OF S1-47 SHEETS

F.A.I. RTE.	SECTION	COUNTY	TOTAL SHEETS	SHEET NO.
I-80	FAI 80 21 STRUCTURE 6	WILL	898	541

CONTRACT NO. 62R27

ILLINOIS FED. AID PROJECT

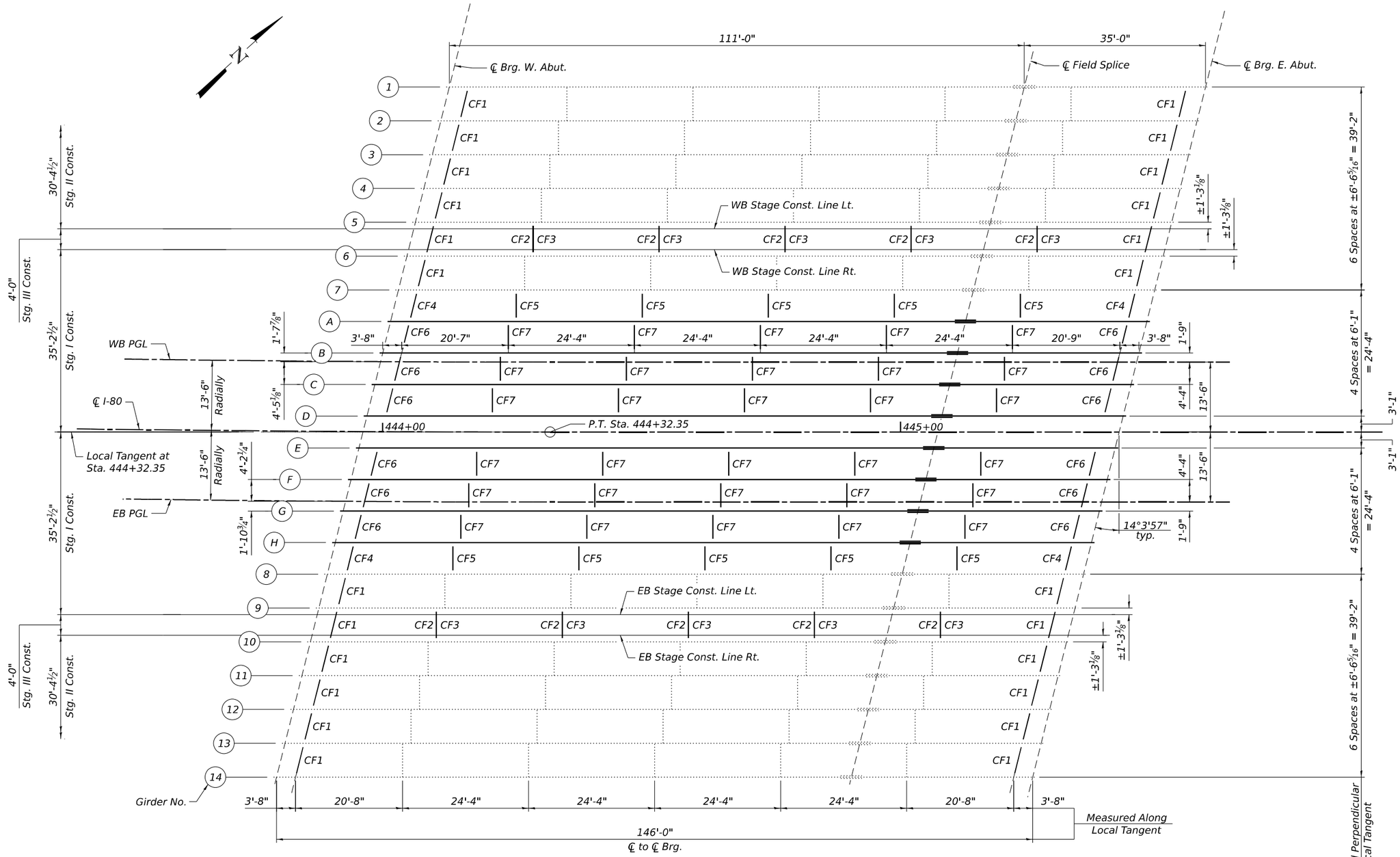

FRAMING PLAN

MODEL: Drawing
FILE NAME: pw://transystems-pw.bentley.com:transyscorp-pw1-hosted/Documents/Projects_2018/CH401/401180022/02-TranSystems/CAD/62R27/Sheets/23-Structural/099-0301 & 099-0302/0990301-62R27-031-FramePlan.dgn

TRANSYSTEMS

USER NAME = amkluver	DESIGNED - TJA	REVISED -	
	CHECKED - ESS	REVISED -	
PLOT SCALE = NTS	DRAWN - TJA	REVISED -	
PLOT DATE = 6/23/2023	CHECKED - WJC	REVISED -	

STATE OF ILLINOIS
DEPARTMENT OF TRANSPORTATION

FRAMING PLAN
STRUCTURE NOS. 099-0301 (EB) & 099-0302 (WB)

SHEET S1-31 OF S1-47 SHEETS

F.A.I. RTE.	SECTION	COUNTY	TOTAL SHEETS	SHEET NO.
I-80	FAI 80 21 STRUCTURE 6	WILL	898	542
		CONTRACT NO. 62R27		
		ILLINOIS	FED. AID PROJECT	

EXISTING INTERIOR GIRDER MOMENT TABLE			
		0.24 or 0.76 Sp. 1	0.5 Sp. 1
Is	(in^4)	54,556	91,683
Ic(n)	(in^4)	114,740	170,708
Ic(3n)	(in^4)	84,422	127,454
Ss	(in^3)	1,992	3,369
Sc(n)	(in^3)	2,461	3,933
Sc(3n)	(in^3)	2,285	3,689
Z	(in^3)	-	-
w_D	(k/')	1.29	1.29
M_D	('k)	2,480	3,438
s_D	(k/')	0.20	0.20
M_{sD}	('k)	387	531
M_L	('k)	1,039	1,402
MIM	('k)	192	259
$\frac{5}{3}[M_L + I]$	('k)	2,051	2,768
Ma	('k)	6,392	6,392
* Mu	('k)	9,060	9,060
f_{sD} non-comp	(ksi)	14.9	12.2
f_{sD} (comp)	(ksi)	2.0	1.7
$f_{s\frac{5}{3}[M_L + M_I]}$	(ksi)	10.0	8.4
fs (Overload)	(ksi)	27.0	22.4
** fs (Total)	(ksi)	-	-
VR	(k)	-	51.3

EXISTING INTERIOR GIRDER REACTION TABLE		
		Abut.
R_D	(k)	107.2
R_L	(k)	53.4
R_I	(k)	9.8
R_{Total}	(k)	170.4

* Compact section
** Braced non-compact and partially braced section

Is, Ss: Non-composite moment of inertia and section modulus of the steel section used for computing fs(Total and Overload) due to non-composite dead loads ($in.^4$ and $in.^3$).
Ic(n), Sc(n): Composite moment of inertia and section modulus of the steel and deck based upon the modular ratio, "n", used for computing fs(Total and Overload) due to short-term composite live loads ($in.^4$ and $in.^3$).
Ic(3n), Sc(3n): Composite moment of inertia and section modulus of the steel and deck based upon 3 times the modular ratio, "3n", used for computing fs(Total and Overload) due to long-term composite (superimposed) dead loads ($in.^4$ and $in.^3$).
Z: Plastic Section Modulus of the steel section in non-composite areas ($in.^3$).
w_D: Un-factored non-composite dead load (kips/ft.).
M_D: Un-factored moment due to non-composite dead load (kip-ft.).
s_D: Un-factored long-term composite (superimposed) dead load (kips/ft.)
M_{sD}: Un-factored moment due to long-term composite (superimposed) dead load (kip-ft.).
M_L: Un-factored live load moment (kip-ft.).
MIM: Un-factored moment due to impact (kip-ft.).
Ma: Factored design moment (kip-ft.).
$1.3\ [M_D + M_{sD} + \frac{5}{3}(M_L + MI)]$
Mu: Compact composite moment capacity according to AASHTO LFD 10.50.1.1 or compact non-composite moment capacity according to AASHTO LFD 10.48.1 (kip-ft.).
fs (Overload): Sum of stresses as computed from the moments below (ksi).
$M_D + M_{sD} + \frac{5}{3}(M_L + MI)$
fs (Total): Sum of stresses as computed from the moments below on non-compact section (ksi).
$1.3\ [M_D + M_{sD} + \frac{5}{3}(M_L + MI)]$
VR: Maximum R_L + impact shear range within the composite portion of the span for stud shear connector design (kips).

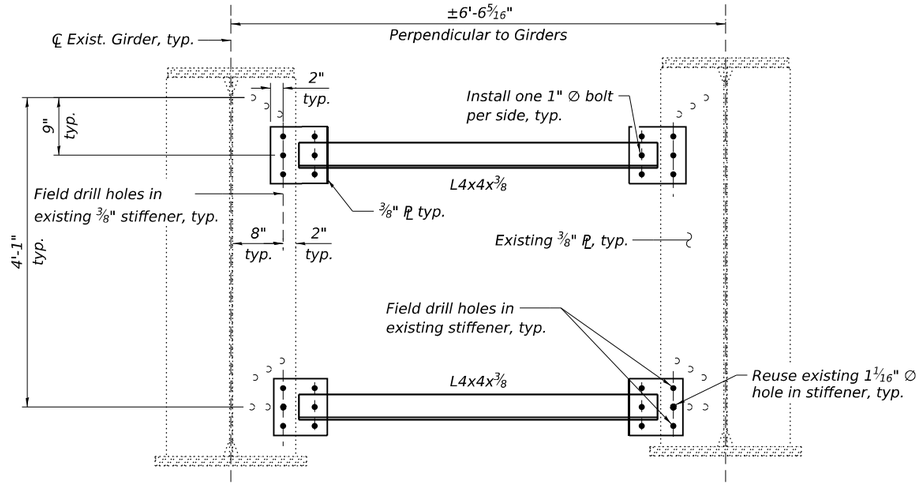

CROSS FRAME CF2 - TEMPORARY BRACING

(10 Required)

NOTES FOR CROSS FRAME CF2:

1. This detail shall be installed prior to Stage II deck pour.
2. After Stage II deck has cured, and prior to Stage III Closure Pour, remove temporary bracing angles and install CF3.
3. Work this detail with Cross Frame 3
4. Temporary 1" ∅ Bolts shall be finger tight.

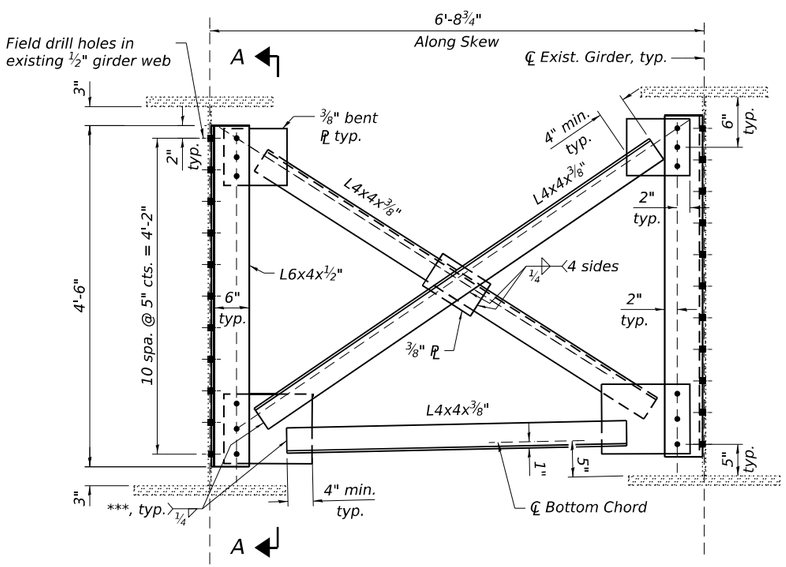

CROSS FRAME CF1

(24 Required)

*** Fillet weld angles along 3 sides on one face of gusset plate.

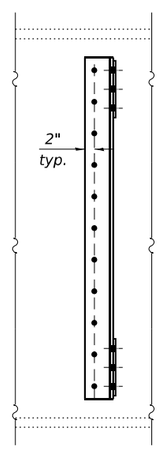

SECTION A-A

Notes:

Bolts for cross frames shall be 7/8" ∅ with 1 1/16" ∅ holes unless noted otherwise.

Two hardened washers required for each set of oversized holes.

All cross frames shall be installed as steel is erected and secured with erection pins and bolts except as otherwise noted. Individual cross frames at supports may be temporarily disconnected to install bearing anchor rods.

Field drilling of holes included with the cost of Furnishing and Erecting Structural Steel.

Cost of installing and removing Temporary Bracing, and all field drilling of holes included with Furnishing and Erecting Structural Steel.

Holes are shop drilled unless noted otherwise.

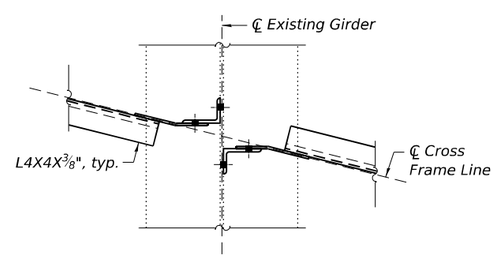

CROSS FRAME CF1 PLAN VIEW AT CONNECTION

Bottom angles not shown for clarity

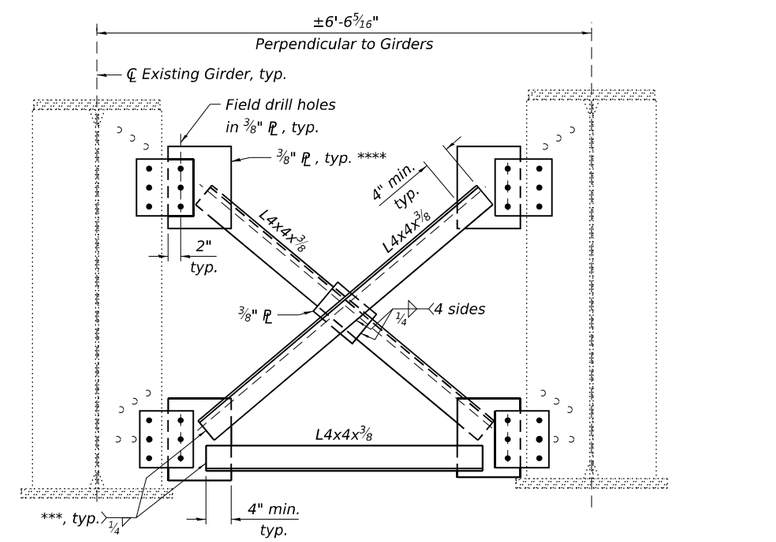

CROSS FRAME CF3

(10 Required)

**** Oversize 3/8" PL vertically to provide room for field drilled holes

MODEL: Untitled
FILE NAME: pw://transystems-pw.bentley.com:transyscorp-pw1-hosted/Documents/Projects_2018/CH401/401180022/02-TranSystems/CAD/62R27/Sheets/23-Structural/099-0301 & 099-0302/0990301-62R27-032-Ex_Beam1.dgn

TRANSYSTEMS

USER NAME = amkluver	DESIGNED - TJA	REVISED -	
	CHECKED - ESS	REVISED -	
PLOT SCALE = NTS	DRAWN - TJA	REVISED -	
PLOT DATE = 7/27/2023	CHECKED - WJC	REVISED -	

STATE OF ILLINOIS
DEPARTMENT OF TRANSPORTATION

EXISTING GIRDER DETAILS 1
STRUCTURE NOS. 099-0301 (EB) & 099-0302 (WB)

SHEET S1-32 OF S1-47 SHEETS

F.A.I. RTE.	SECTION	COUNTY	TOTAL SHEETS	SHEET NO.
I-80	FAI 80 21 STRUCTURE 6	WILL	898	543

CONTRACT NO. 62R27

ILLINOIS | FED. AID PROJECT

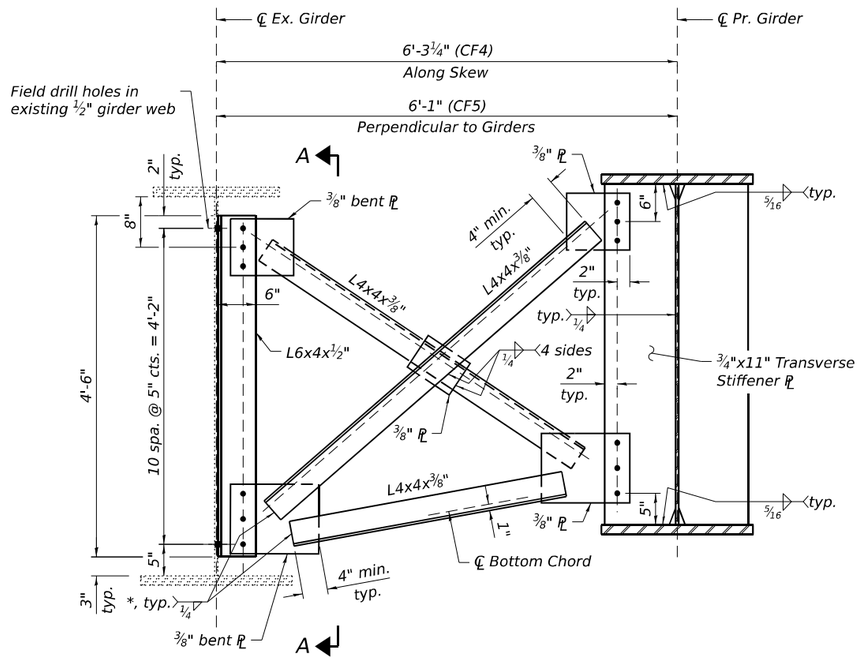

CROSS FRAME CF4

(4 Required)

CROSS FRAME CF5

(10 Required)

* Fillet weld angles along 3 sides on one face of gusset plate.

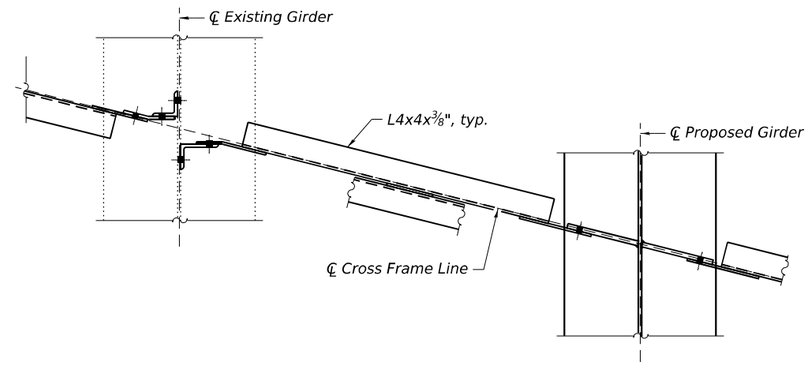

CROSS FRAME CF4
PLAN VIEW AT CONNECTION

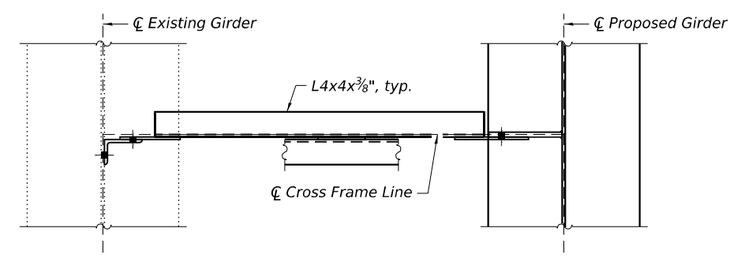

CROSS FRAME CF5
PLAN VIEW AT CONNECTION

Notes:

Bolts for cross frames shall be ⅞" ∅ with 1 1/16" ∅ holes unless noted otherwise.

Two hardened washers required for each set of oversized holes.

All cross frames shall be installed as steel is erected and secured with erection pins and bolts except as otherwise noted. Individual cross frames at supports may be temporarily disconnected to install bearing anchor rods.

Field drilling of holes included with the cost of Furnishing and Erecting Structural Steel.

For Section A-A, see sheet S1-32 of S1-47 .

For stiffener clip and weld details, see sheet S1-35 of S1-47 .

Holes are shop drilled unless noted otherwise.

PROPOSED INTERIOR GIRDER MOMENT TABLE			
		0.24 or 0.76 Sp. 1	0.5 Sp. 1
Is	(in⁴)	62,019	101,627
Ic(n)	(in⁴)	106,789	164,037
Ic(3n)	(in⁴)	82,780	128,303
Ss	(in³)	2,176	3,717
Sc(n)	(in³)	2,525	4,188
Sc(3n)	(in³)	2,371	3,959
Z	(in³)	245	391
wD	(k/')	1.18	1.18
MD	('k)	2,263	3,150
sD	(k/')	0.20	0.20
MsD	('k)	387	509
ML	('k)	968	1,307
MI	('k)	179	241
5/3 [ML + I]	('k)	1,911	2,580
Ma	('k)	5,929	8,111
* Mu	('k)	12,266	19,553
fsD non-comp	(ksi)	12.5	10.2
fs D(comp)	(ksi)	2.0	1.5
fs 5/3 [ML + MI]	(ksi)	9.1	7.4
fs (Overload)	(ksi)	23.5	19.1
** fs (Total)	(ksi)	-	-
VR	(k)	-	49.2

PROPOSED INTERIOR GIRDER REACTION TABLE		
		Abut.
R D	(k)	98.6
R L	(k)	49.3
RI	(k)	9.1
R Total	(k)	157.0

* Compact section
** Braced non-compact and partially braced section

Is, Ss: Non-composite moment of inertia and section modulus of the steel section used for computing fs(Total and Overload) due to non-composite dead loads (in.⁴ and in.³).

Ic(n), Sc(n): Composite moment of inertia and section modulus of the steel and deck based upon the modular ratio, "n", used for computing fs(Total and Overload) due to short-term composite live loads (in.⁴ and in.³).

Ic(3n), Sc(3n): Composite moment of inertia and section modulus of the steel and deck based upon 3 times the modular ratio, "3n", used for computing fs(Total and Overload) due to long-term composite (superimposed) dead loads (in.⁴ and in.³).

Z: Plastic Section Modulus of the steel section in non-composite areas (in.³).

wD: Un-factored non-composite dead load (kips/ft.).

MD: Un-factored moment due to non-composite dead load (kip-ft.).

sD: Un-factored long-term composite (superimposed) dead load (kips/ft.)

MsD: Un-factored moment due to long-term composite (superimposed) dead load (kip-ft.).

ML: Un-factored live load moment (kip-ft.).

MI: Un-factored moment due to impact (kip-ft.).

Ma: Factored design moment (kip-ft.).
1.3 [MD + MsD + 5/3 (ML + MI)]

Mu: Compact composite moment capacity according to AASHTO LFD 10.50.1.1 or compact non-composite moment capacity according to AASHTO LFD 10.48.1 (kip-ft.).

fs (Overload): Sum of stresses as computed from the moments below (ksi).
MD + MsD + 5/3 (ML + MI)

fs (Total): Sum of stresses as computed from the moments below on non-compact section (ksi).
1.3 [MD + MsD + 5/3 (ML + MI)]

VR: Maximum L + impact shear range within the composite portion of the span for stud shear connector design (kips).

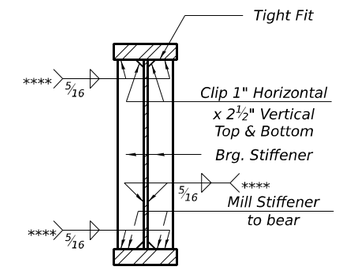

SECTION AT ABUTMENT

**** Terminate ¼" (±⅛") from the end of plate intersects. For alternate clip details, see sheet S1-35 of S1-47.

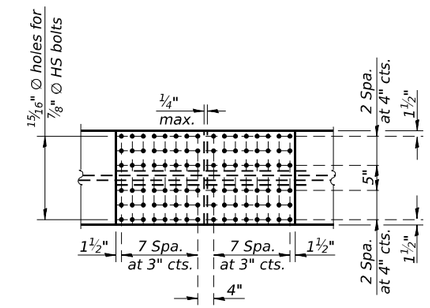

TOP FLANGE

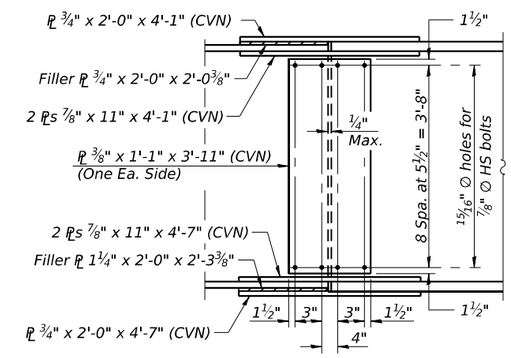

ELEVATION

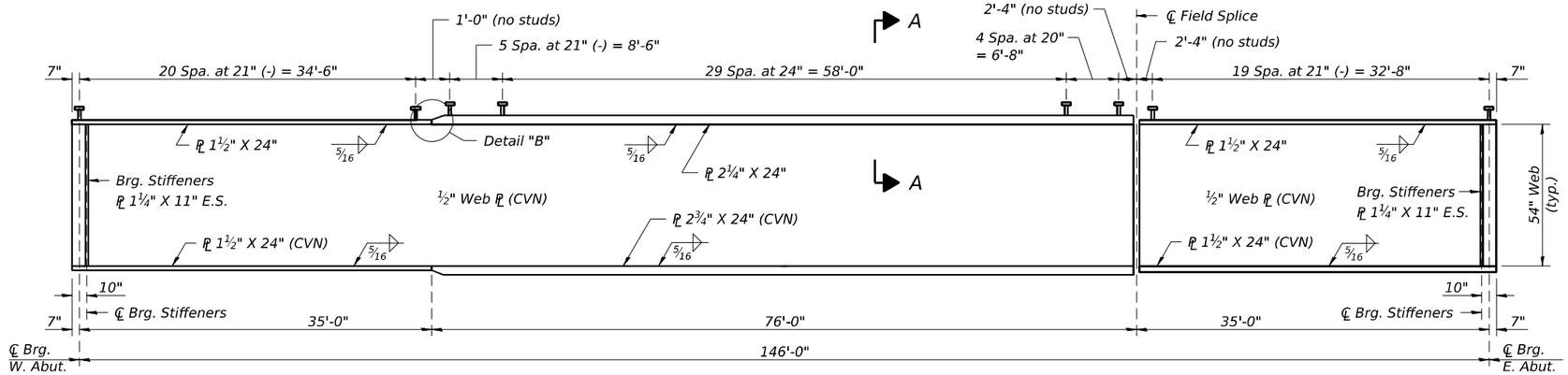

GIRDER ELEVATION - GIRDERS A THRU H

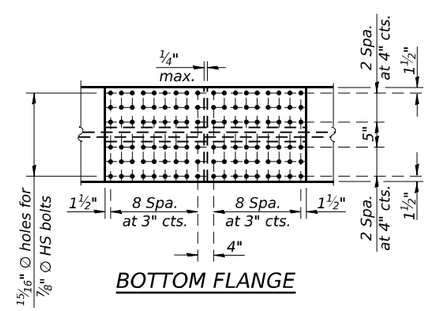

BOTTOM FLANGE

FIELD SPLICE DETAIL

(8 Required)

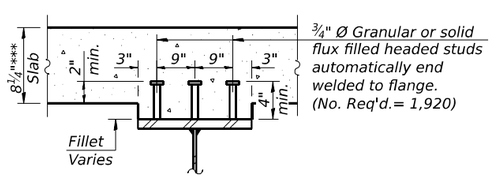

SECTION A-A

*** Prior to Grinding

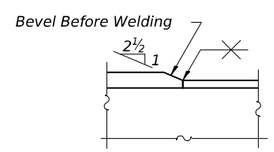

DETAIL "B"

Notes:
E.S. = Each Side
"CVN" denotes Charpy-V-Notch impact energy requirements, zone 2.
All structural steel for girders, bearing stiffener plates, and splice plates except fill plates shall be AASHTO M270 Grade 50.

MODEL: Untitled
FILE NAME: pw://transystems-pw.bentley.com:transyscorp-pw1-hosted/Documents/Projects_2018/CH401/401180022/02-TranSystems/CAD/62R27/Sheets/23-Structural/099-0301 & 099-0302/0990301-62R27-034-Pr_Beam.dgn

TRANSYSTEMS

USER NAME = amkluver	DESIGNED - TJA	REVISED -	
	CHECKED - ESS	REVISED -	
PLOT SCALE = NTS	DRAWN - TJA	REVISED -	
PLOT DATE = 7/27/2023	CHECKED - WJC	REVISED -	

STATE OF ILLINOIS
DEPARTMENT OF TRANSPORTATION

GIRDER ELEVATION & DETAILS
STRUCTURE NOS. 099-0301 (EB) & 099-0302 (WB)

SHEET S1-34 OF S1-47 SHEETS

F.A.I. RTE.	SECTION	COUNTY	TOTAL SHEETS	SHEET NO.
I-80	FAI 80 21 STRUCTURE 6	WILL	898	545
		CONTRACT NO. 62R27		
	ILLINOIS	FED. AID PROJECT		

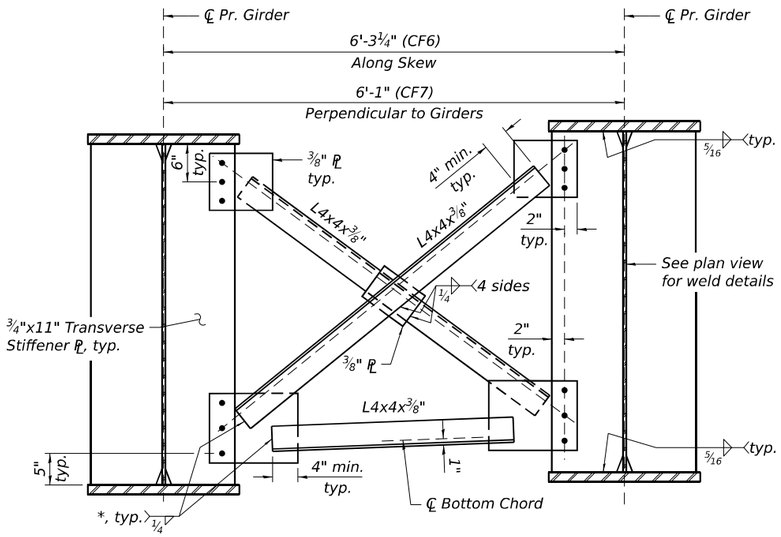

CROSS FRAME CF6

(12 Required)

CROSS FRAME CF7

(30 Required)

* Fillet weld angles along 3 sides on one face of gusset plate.

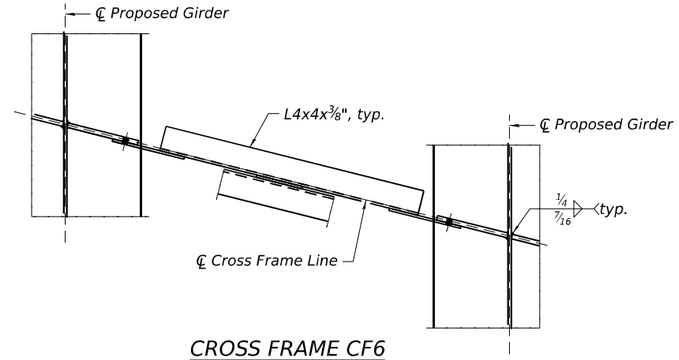

CROSS FRAME CF6
PLAN VIEW AT CONNECTION

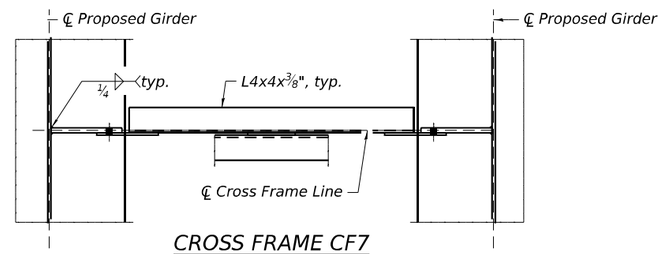

CROSS FRAME CF7
PLAN VIEW AT CONNECTION

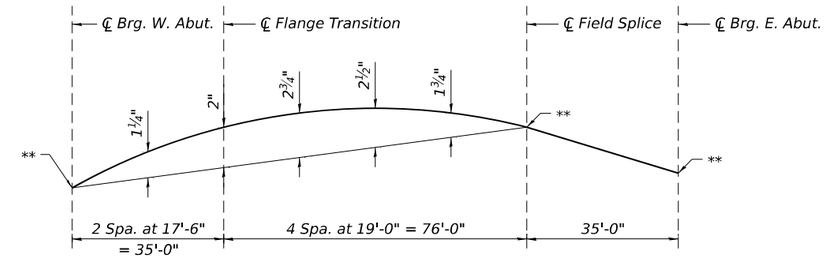

CAMBER DIAGRAM

** Top of Web Elevations

TOP OF WEB ELEVATIONS

Girder	℄ Brg. W. Abut.	℄ Field Splice	℄ Brg. E. Abut.
A	605.14	605.65	605.56
B	605.31	605.82	605.73
C	605.47	605.99	605.90
D	605.63	606.16	606.08
E	603.60	604.14	604.08
F	603.77	604.31	604.25
G	603.93	604.48	604.42
H	604.10	604.64	604.59

(For fabrication only)

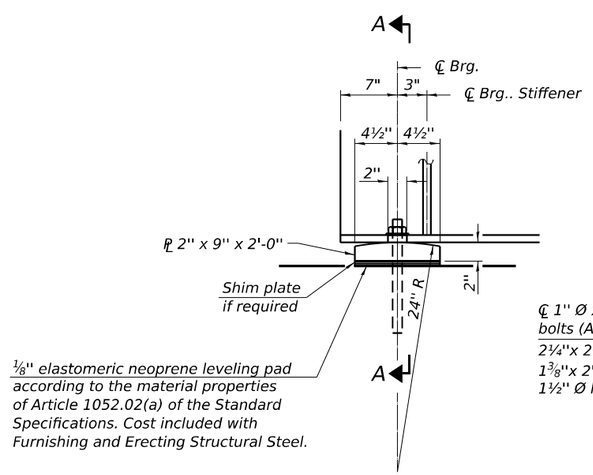

ELEVATION AT ABUTMENT

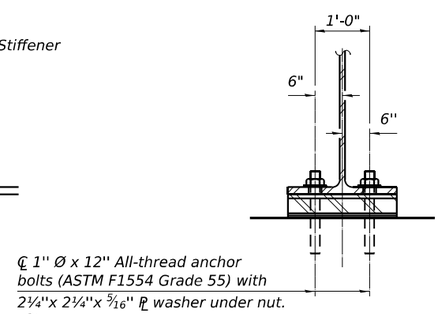

SECTION A-A

FIXED BEARING - ABUTMENTS

BILL OF MATERIAL

Item	Unit	Total
Anchor Bolts, 1"	Each	32

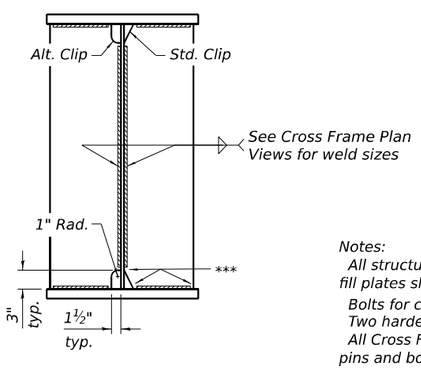

TRANSVERSE STIFFENER
WELD LIMITS AND CLIP DETAILS

*** Stop welds ¼" (⅛") from edges as shown. Typical.

Notes:

All structural steel for girders, bearing stiffener plates, and splice plates except fill plates shall be AASHTO M270 Grade 50.

Bolts for cross frames shall be ⅞" ∅ with 1 1/16" ∅ holes unless noted otherwise. Two hardened washers required for each set of oversized holes.

All Cross Frames shall be installed as steel is erected and secured with erection pins and bolts, exept as otherwise noted. Individual cross frames at supports may be temporarily disconnected to install bearing anchor rods.

Anchor bolts at all supports shall be installed as each member is erected unless an equivalent temporary means of lateral restraint is used.

Fixed Bearing Assembly included in "Furnishing and Erecting Structural Steel."

Two ⅛" adjusting shims shall be provided for each bearing in addition to all other plates or shims and placed as shown on the bearing details.

The structure steel plates of the Bearing shall conform to the requirements of AASHTO M270 Grade 50.

ABUTMENT REMOVAL NOTES:

1. Existing reinforcement shall be cleaned and incorporated into new construction as noted in these plans. As directed by the Engineer, any reinforcement called out for re-use that is damaged during concrete removal operations shall be repaired or replaced using an approved bar splicer or anchorage system. Cost included with Concrete Removal.
2. Removal of existing bridge deck and fillet concrete shall be included in the price bid for Removal of Existing Concrete Deck No. 1 or No. 2.
3. Removal of existing junction boxes, conduits, underdeck lighting, deck drains, downspouts, and any other elements embedded in or attached to the structure shall not be paid for separately with costs included with Removal of Existing Concrete Deck No. 1 or No. 2.
4. For removal of existing steel end diaphragms between the existing beams at abutments, see sheet S1-05 of S1-47
5. See Sheet S1-37 of S1-47 for Sections A-A, B-B, C-C, and D-D.

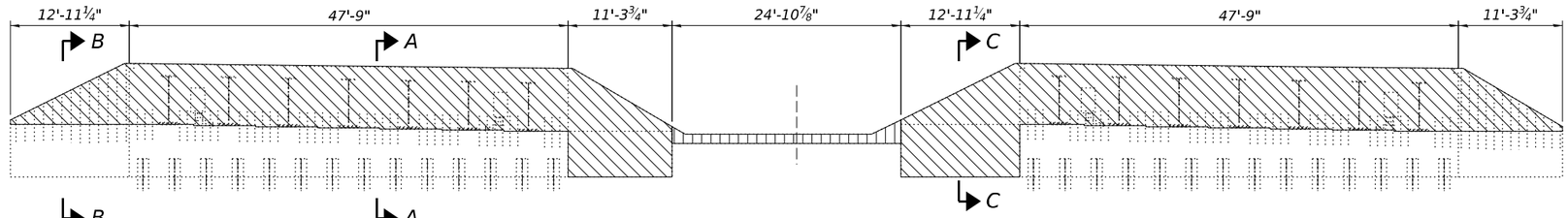

WEST ABUTMENT REMOVAL ELEVATION

Looking West

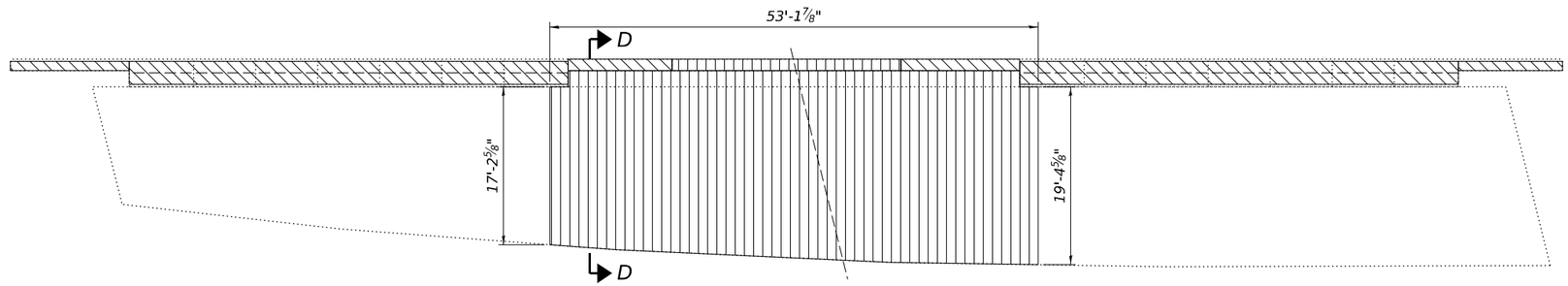

WEST ABUTMENT REMOVAL PLAN

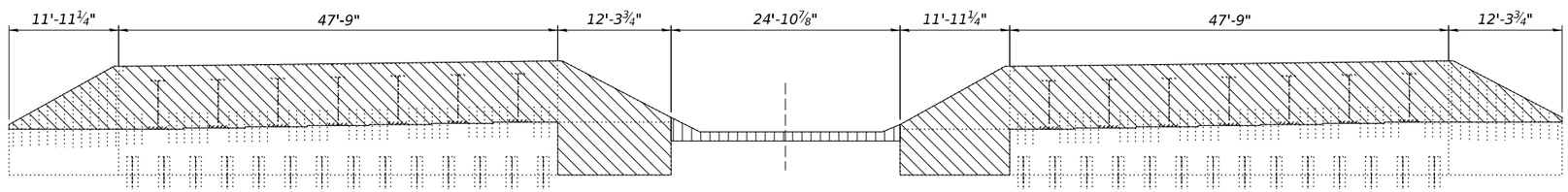

EAST ABUTMENT REMOVAL ELEVATION

Looking East

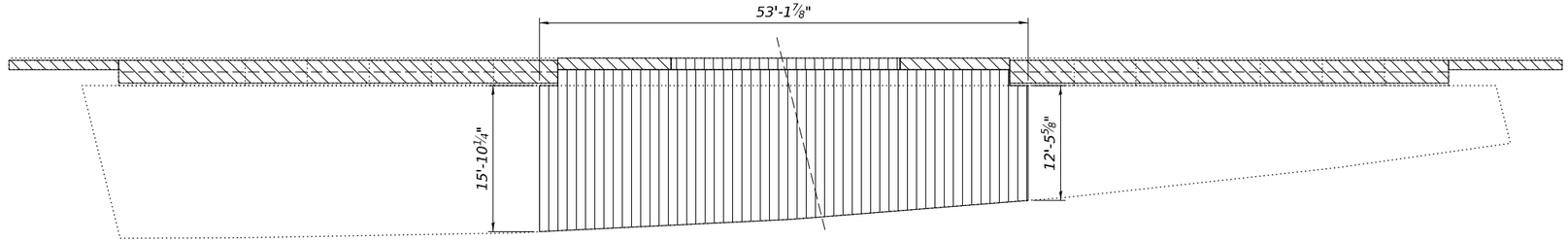

EAST ABUTMENT REMOVAL PLAN

LEGEND

Concrete Removal

Slope Wall Removal

BILL OF MATERIAL

Item	Unit	Total
Concrete Removal	Cu. Yd.	130.5
Slope Wall Removal	Sq. Yd.	252

LEGEND

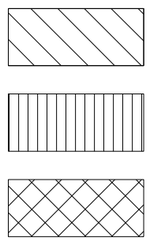

Concrete Removal

Slope Wall Removal

Removal of Existing Concrete Deck No. 1 or No. 2

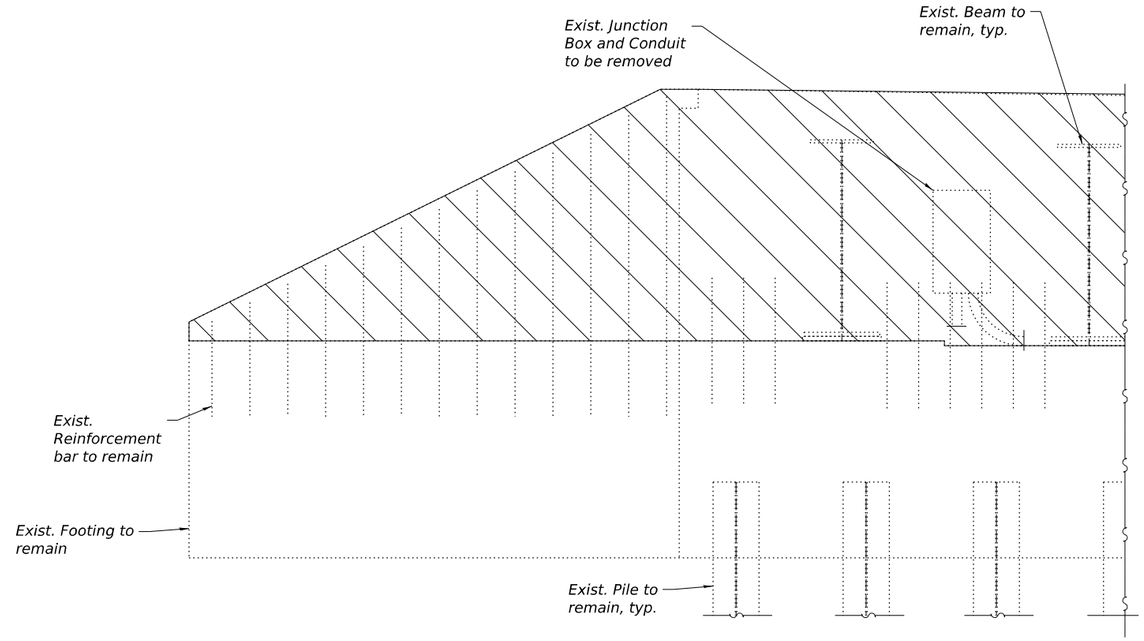

OUTSIDE ABUTMENT WINGWALL REMOVAL ELEVATION

WB Southwest corner shown, others similar
Existing steel end diaphragms not shown.

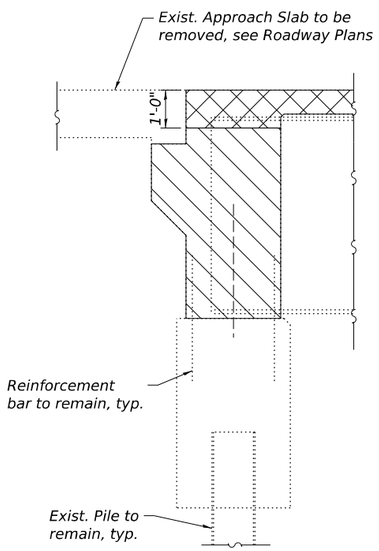

SECTION A-A

Existing steel end diaphragms not shown.
See sheet S1-05 of S1-47 for end diaphragm removal details.

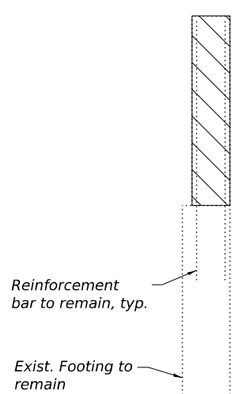

SECTION B-B

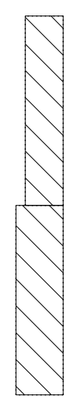

SECTION C-C

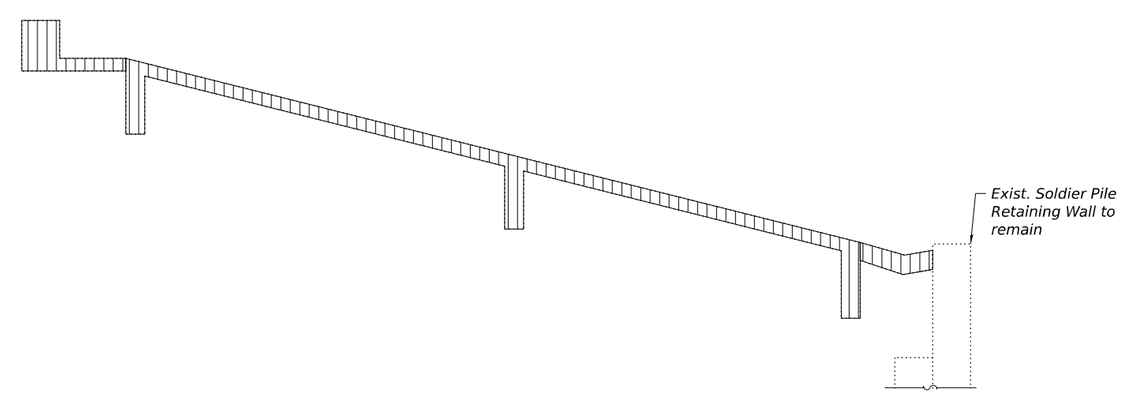

SECTION D-D

MODEL: Drawing View
FILE NAME: pw://transystems-pw.bentley.com:transyscorp-pw1-hosted/Documents/Projects_2018/CH401/401180022/02-TranSystems/CAD/62R27/Sheets/23-Structural/099-0301 & 099-0302/09900301-62R27-037-AbutmentRemoval_2.dgn

TRANSYSTEMS	USER NAME = amkluver	DESIGNED - TJJ	REVISED -	STATE OF ILLINOIS DEPARTMENT OF TRANSPORTATION	ABUTMENT REMOVAL DETAILS 2 STRUCTURE NOS. 099-0301 (EB) & 099-0302 (WB)	F.A.I. RTE.	SECTION	COUNTY	TOTAL SHEETS	SHEET NO.
		CHECKED - AMD	REVISED -			I-80	FAI 80 21 STRUCTURE 6	WILL	898	548
	PLOT SCALE = NTS	DRAWN - TJJ	REVISED -			CONTRACT NO. 62R27				
	PLOT DATE = 6/23/2023	CHECKED - AMD	REVISED -		SHEET S1-37 OF S1-47 SHEETS	ILLINOIS	FED. AID PROJECT			

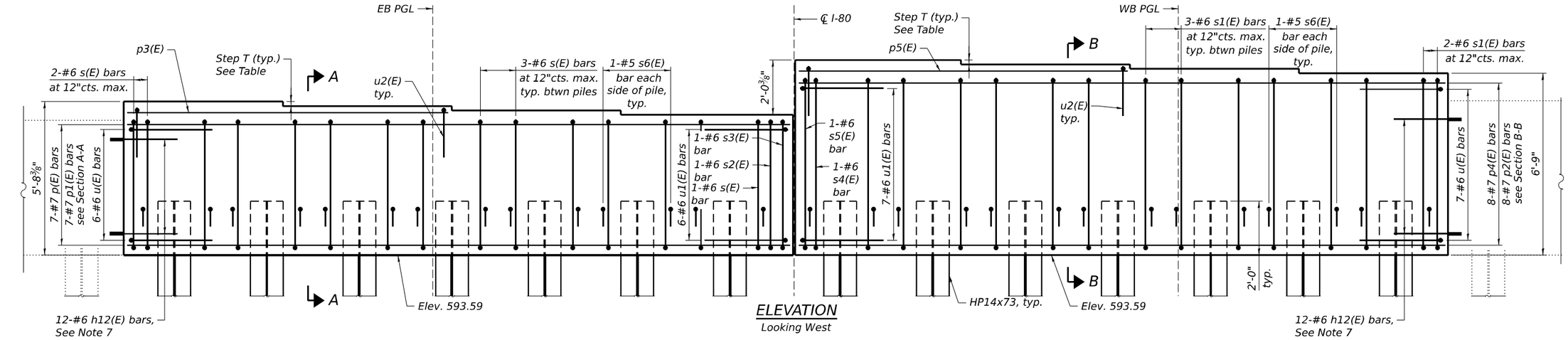

ELEVATION

Looking West

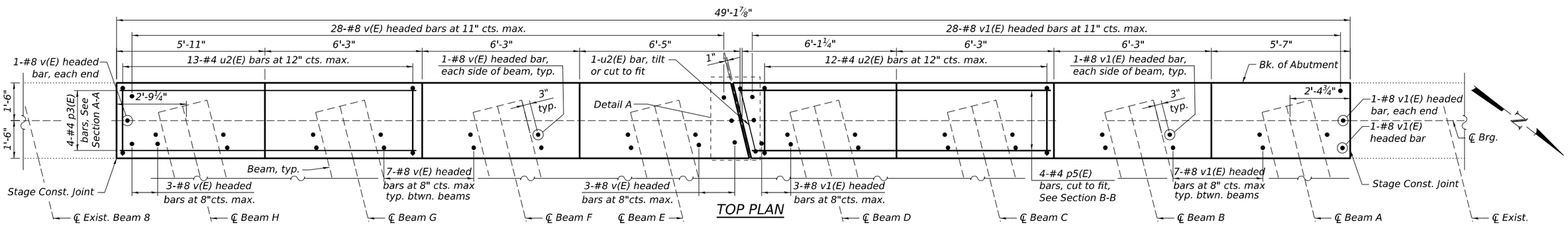

TOP PLAN

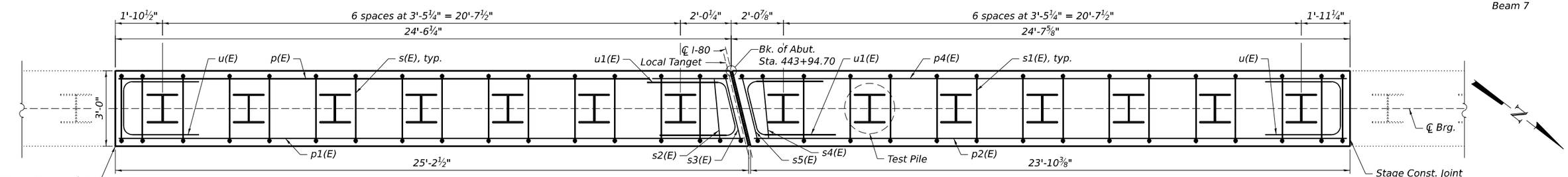

PLAN - PILE LAYOUT

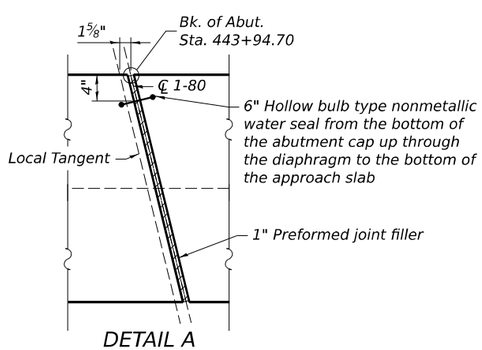

DETAIL A

WEST ABUTMENT BEAM SEAT ELEVATIONS

Beam	Elev.	Step T (in)
A	600.34	2"
B	600.51	1 7/8"
C	600.67	1 7/8"
D	600.83	NA
E	598.80	1 7/8"
F	598.96	1 7/8"
G	599.12	2"
H	599.29	

PILE DATA - WEST ABUTMENT

Type: HP14x73 with pile shoes
Nominal Required Bearing: 578 kips
Allowable Resistance Available: 193 kips
Est. Length: 41 feet
No. Production Piles: 13
No. Test Piles: 1

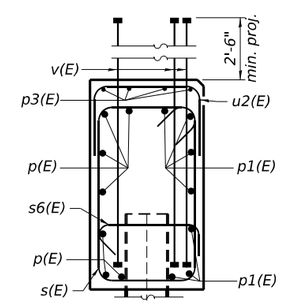

SECTION A-A

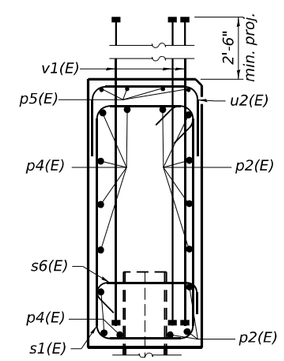

SECTION B-B

Notes:

1. All costs associated with preformed joint filler and nonmetallic water seal shall be included in the price bid for Concrete Structures.
2. Nonmetallic water seal shall be per Article 1054 of the Standard Specifications.
3. Drill and grout bars as shown according to Article 584 of the Standard Specifications, all costs included with Concrete Structures.
4. Pour steps monolithically with cap.
5. Headed bars shall conform to ASTM A970 with threaded attachment; Class HA; and reinforcement bars conforming to ASTM A706. Cost included with Reinforcement Bars, Epoxy Coated.
6. For details of piles see sheet S1-43 of S1-47.
7. Drill and grout bars according to Article 584 of the Standard Specifications with a minimum embedment of 7 inches for #6 bars. See Section E-E on sheet S1-39 of S1-47.

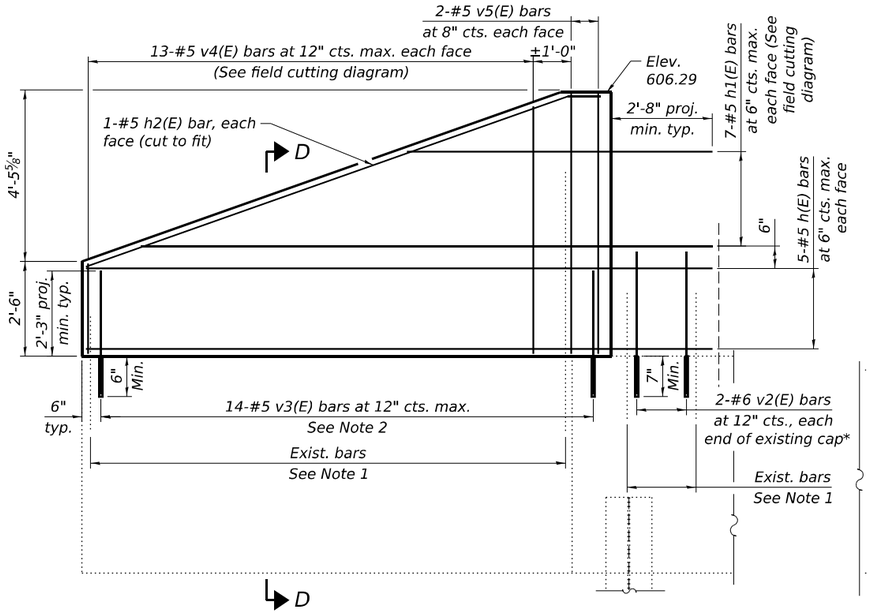

EASTBOUND (SOUTHWEST) WINGWALL ELEVATION

Looking West
*See Note 2

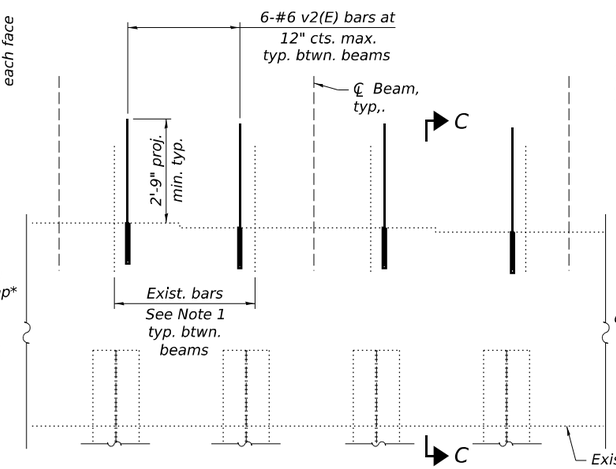

EXISTING WEST ABUTMENT CAP - TYPICAL ELEVATION

Looking West

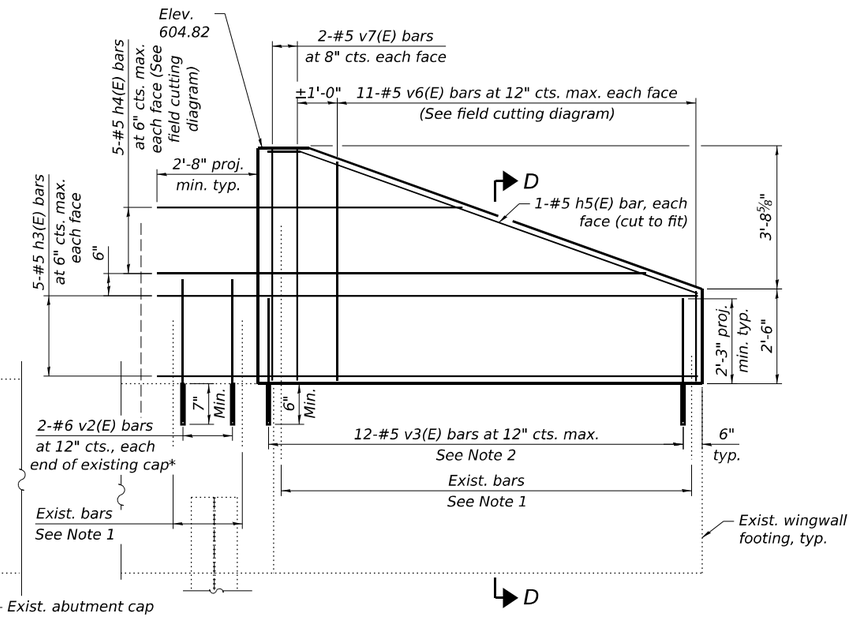

WESTBOUND (NORTHWEST) WINGWALL ELEVATION

Looking West
*See Note 2

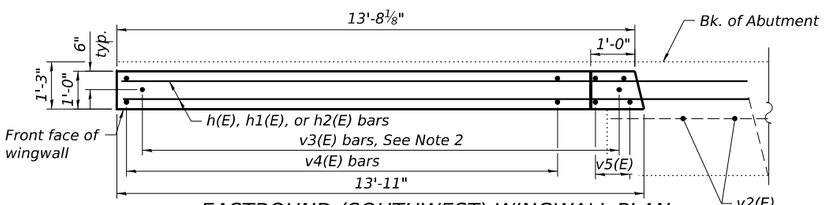

EASTBOUND (SOUTHWEST) WINGWALL PLAN

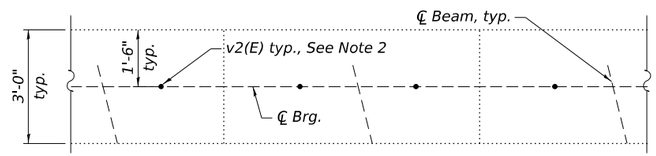

EXISTING WEST ABUTMENT CAP - TYPICAL PLAN

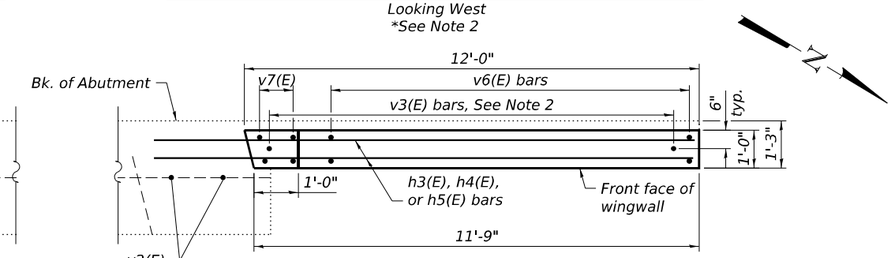

WESTBOUND (NORTHWEST) WINGWALL PLAN

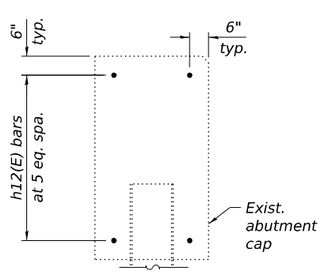

SECTION E-E

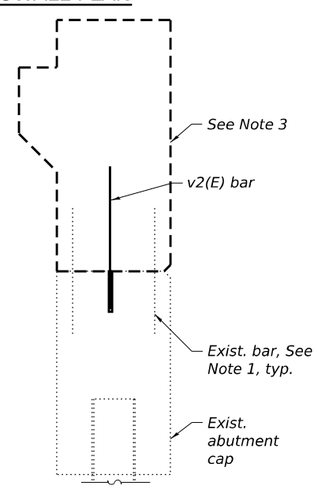

SECTION C-C

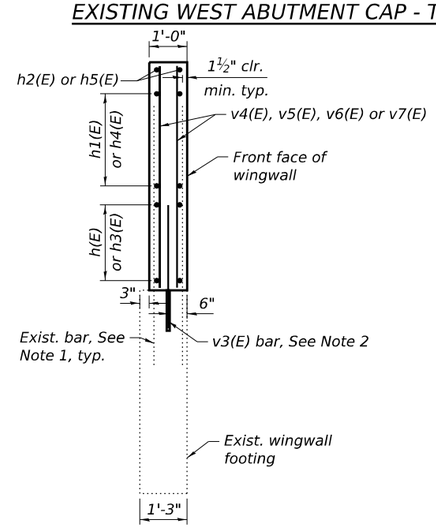

SECTION D-D

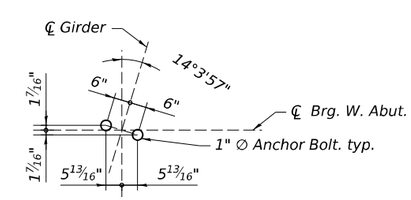

ANCHOR BOLT LAYOUT

Notes:

1. Existing reinforcement shall be cleaned and incorporated into new construction as noted in these plans. As directed by the Engineer, any reinforcement called out for re-use that is damaged during concrete removal operations shall be repaired or replaced using an approved bar splicer or anchorage system. Cost included with Concrete Removal.
2. Drill and grout bars according to Article 584 of the Standard Specifications with a minimum embedment of 6 inches for #5 bars and 7 inches for #6 bars.
3. For details of abutment diaphragms, see sheet S1-21 of S1-47 .

MODEL: Drawing View
FILE NAME: pw://transystems-pw.bentley.com:transyscorp-pw1-hosted/Documents/Projects_2018/CH401/401180022/02-TranSystems/CAD/62R27/Sheets/23-Structural/099-0301 & 099-0302/09900301-62R27-039-WestAbutmenDetails.dgn

TRANSYSTEMS

USER NAME = amkluver	DESIGNED - TJJ	REVISED -	
	CHECKED - TJA	REVISED -	
PLOT SCALE = NTS	DRAWN - TJJ	REVISED -	
PLOT DATE = 7/27/2023	CHECKED - TJA	REVISED -	

STATE OF ILLINOIS
DEPARTMENT OF TRANSPORTATION

WEST ABUTMENT DETAILS
STRUCTURE NOS. 099-0301 (EB) & 099-0302 (WB)

SHEET S1-39 OF S1-47 SHEETS

F.A.I. RTE.	SECTION	COUNTY	TOTAL SHEETS	SHEET NO.
I-80	FAI 80 21 STRUCTURE 6	WILL	898	550
		CONTRACT NO. 62R27		
		ILLINOIS	FED. AID PROJECT	

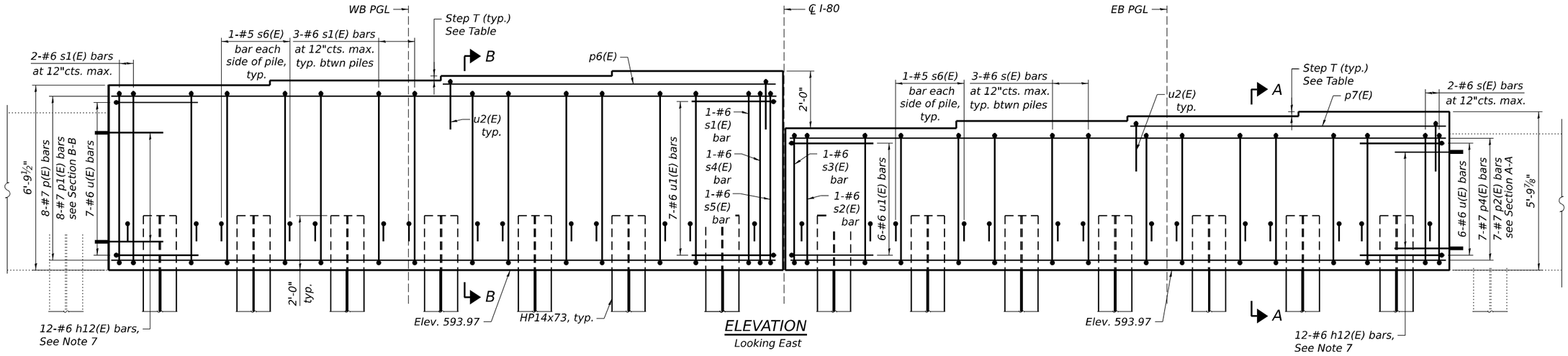

ELEVATION

Looking East

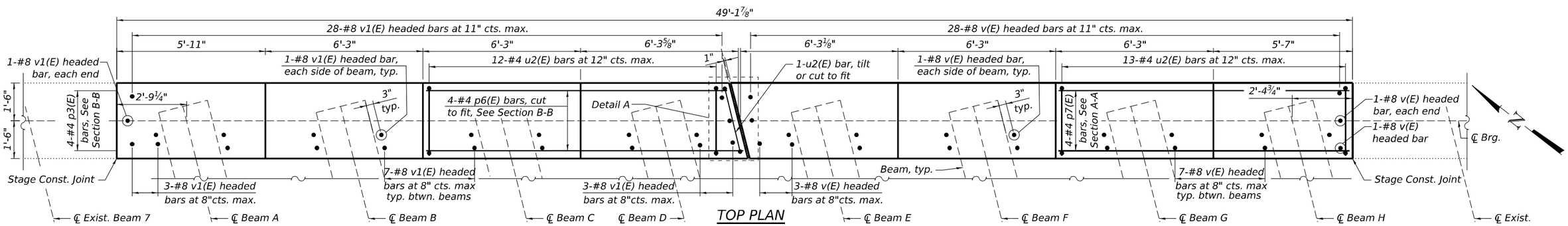

TOP PLAN

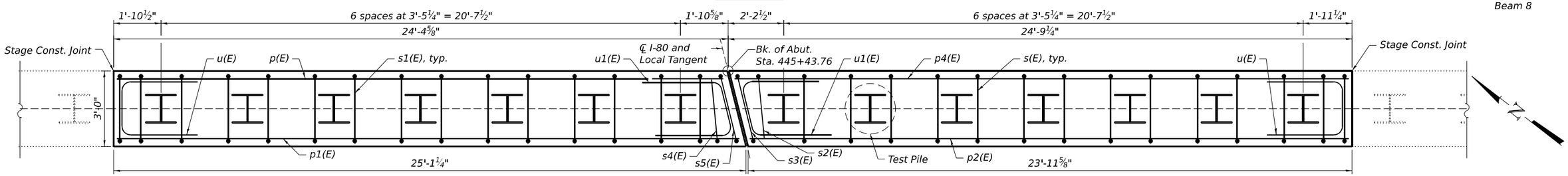

PLAN - PILE LAYOUT

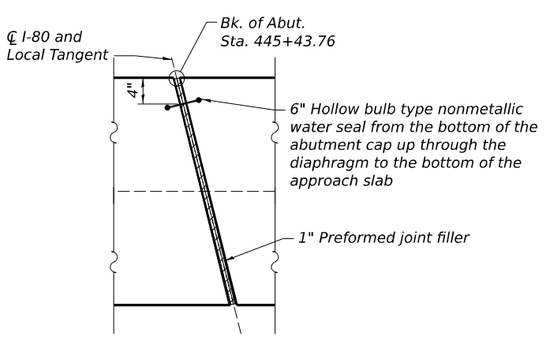

DETAIL A

EAST ABUTMENT BEAM SEAT ELEVATIONS

Beam	Elev.	Step T (in)
A	600.76	2"
B	600.93	2"
C	601.10	2⅛"
D	601.28	NA
E	599.28	2"
F	599.45	2"
G	599.62	2"
H	599.79	

PILE DATA - EAST ABUTMENT

Type: HP14x73 with pile shoes
Nominal Required Bearing: 578 kips
Allowable Resistance Available: 193 kips
Est. Length: 33 feet
No. Production Piles: 13
No. Test Piles: 1

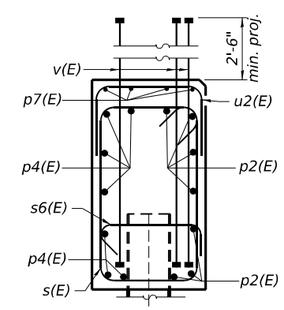

SECTION A-A

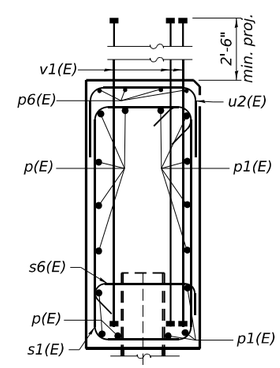

SECTION B-B

Notes:

1. All costs associated with preformed joint filler and nonmetallic water seal shall be included in the price bid for Concrete Structures.
2. Nonmetallic water seal shall be per Article 1054 of the Standard Specifications.
3. Drill and grout bars as shown according to Article 584 of the Standard Specifications, all costs included with Concrete Structures.
4. Pour steps monolithically with cap.
5. Headed bars shall conform to ASTM A970 with threaded attachment; Class HA; and reinforcement bars conforming to ASTM A706. Cost included with Reinforcement Bars, Epoxy Coated.
6. For details of piles see sheet S1-43 of S1-47.
7. Drill and grout bars according to Article 584 of the Standard Specifications with a mi imum embedment of 7 inches for #6 bars. See Section E-E on sheet S1-39 of S1-47.

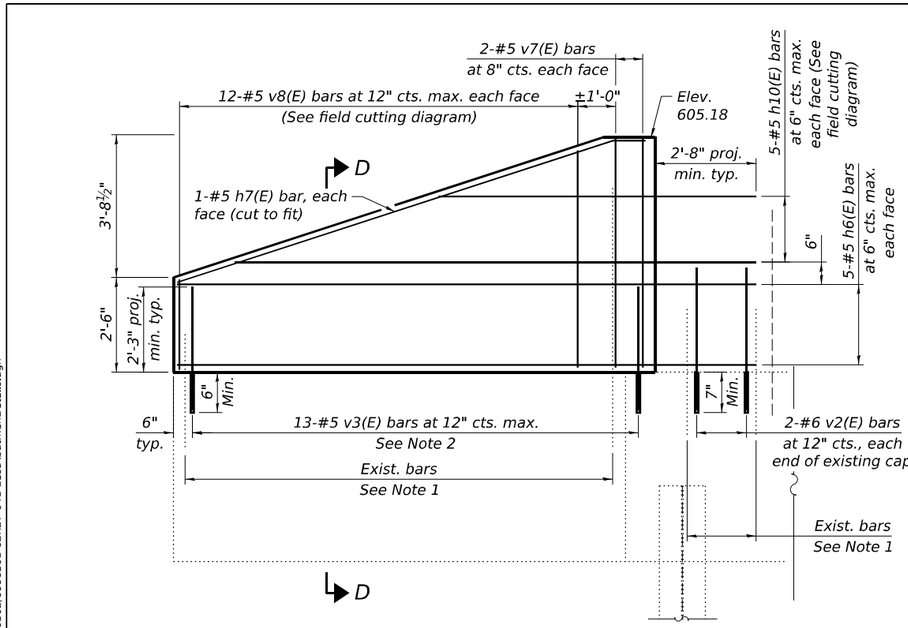

WESTBOUND (NORTHEAST) WINGWALL - ELEVATION

Looking East
*See Note 2

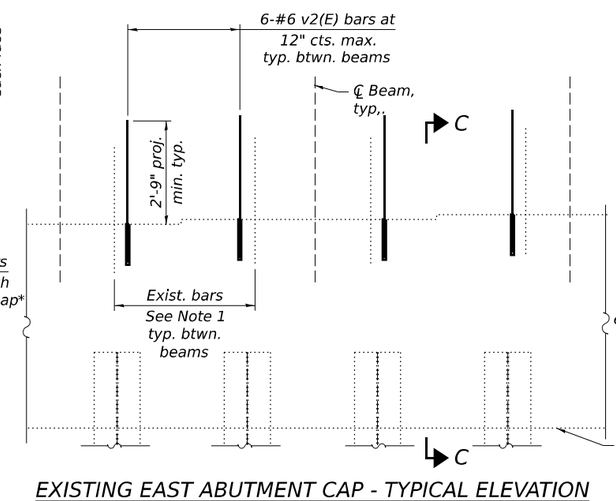

EXISTING EAST ABUTMENT CAP - TYPICAL ELEVATION

Looking East

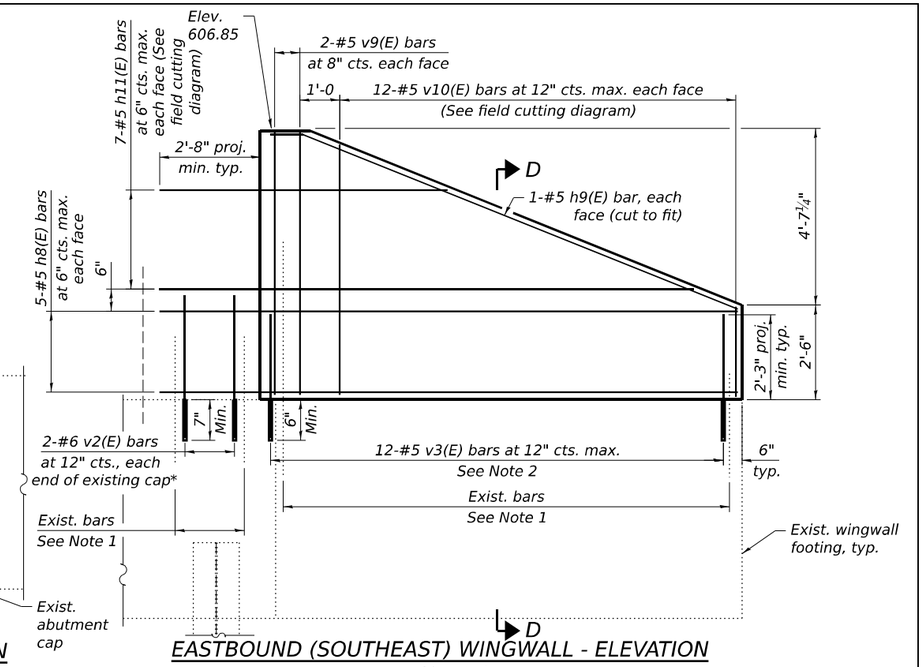

EASTBOUND (SOUTHEAST) WINGWALL - ELEVATION

Looking East
*See Note 2

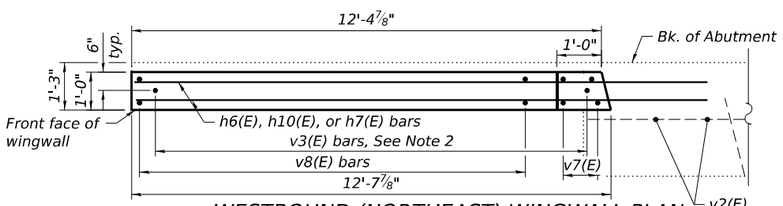

WESTBOUND (NORTHEAST) WINGWALL PLAN

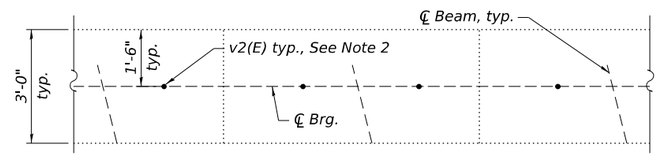

EXISTING EAST ABUTMENT CAP - TYPICAL PLAN

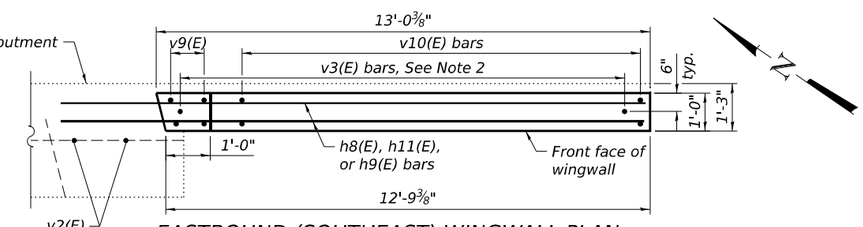

EASTBOUND (SOUTHEAST) WINGWALL PLAN

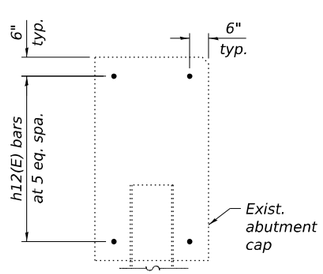

SECTION E-E

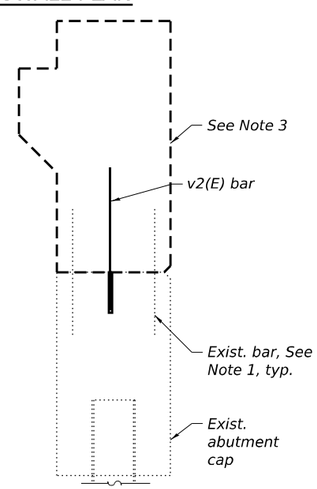

SECTION C-C

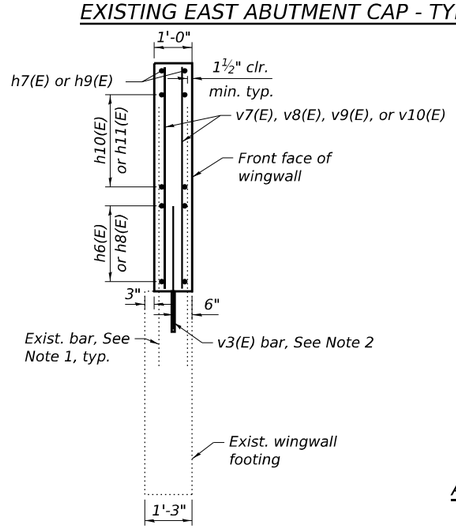

SECTION D-D

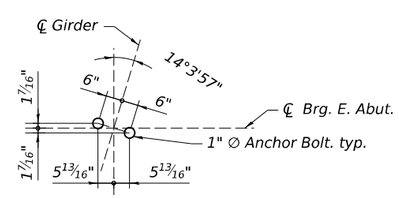

ANCHOR BOLT LAYOUT

Notes:

1. Existing reinforcement shall be cleaned and incorporated into new construction as noted in these plans. As directed by the Engineer, any reinforcement called out for re-use that is damaged during concrete removal operations shall be repaired or replaced using an approved bar splicer or anchorage system. Cost included with Concrete Removal.
2. Drill and grout bars according to Article 584 of the Standard Specifications with a minimum embedment of 6 inches for #5 bars and 7 inches for #6 bars.
3. For details of abutment diaphragms, see sheet S1-22 of S1-47.

TRANSYSTEMS	USER NAME = amkluver	DESIGNED - TJJ	REVISED -	STATE OF ILLINOIS DEPARTMENT OF TRANSPORTATION	EAST ABUTMENT DETAILS STRUCTURE NOS. 099-0301 (EB) & 099-0302 (WB)
		CHECKED - TJA	REVISED -		
	PLOT SCALE = NTS	DRAWN - TJJ	REVISED -		
	PLOT DATE = 7/27/2023	CHECKED - TJA	REVISED -		SHEET S1-41 OF S1-47 SHEETS

F.A.I. RTE.	SECTION	COUNTY	TOTAL SHEETS	SHEET NO.
I-80	FAI 80 21 STRUCTURE 6	WILL	898	552
		CONTRACT NO. 62R27		
	ILLINOIS	FED. AID PROJECT		

MODEL: Drawing View
FILE NAME: pw://transystems-pw.bentley.com:transyscorp-pw1-hosted/Documents/Projects_2018/CH401/401180022/02-TransSystems/CAD/62R27/Sheets/23-Structural/099-0301 & 099-0302/0990301-62R27-041-EastAbutmentDetails.dgn

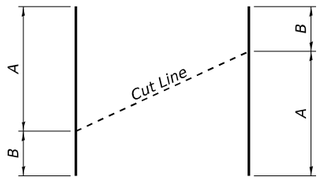

Bar	A	B
h1(E)	14'-11"	7'-10"
h4(E)	13'-3"	7'-11"
h10(E)	14'-6"	8'-6"
h11(E)	15'-0"	7'-3"
v4(E)	9'-3"	4'-11"
v6(E)	8'-6"	4'-11"
v8(E)	5'-10"	2'-3"
v10(E)	6'-8"	2'-3"

FIELD CUTTING DIAGRAM

Order bars full length, cut as shown, and use remainder of bars in opposite face as indicated in these plans.

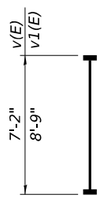

BAR v(E) & v1(E)

(Headed)

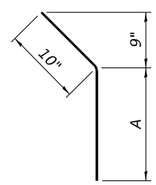

BARS h2(E), h5(E), h7(E) & h9(E)

Bar	A
h2(E)	13'-4"
h5(E)	11'-3"
h7(E)	11'-10"
h9(E)	12'-2"

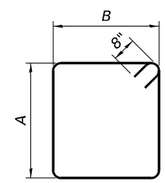

BARS s(E), s1(E), s3(E) & s5(E)

Bar	A	B
s(E)	4'-10"	2'-8"
s1(E)	6'-4"	2'-8"
s3(E)	4'-10"	2'-9"
s5(E)	6'-4"	2'-9"

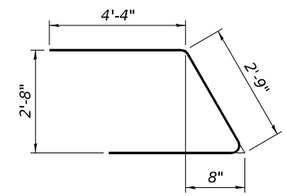

BAR u1(E)

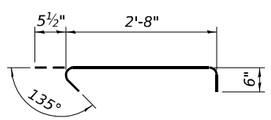

BAR s6(E)

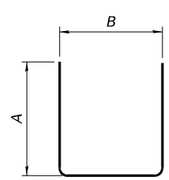

BARS u(E), u2(E), s2(E) & s4(E)

Bar	A	B
u(E)	4'-4"	2'-8"
u2(E)	1'-10"	2'-8"
s2(E)	2'-9"	4'-10"
s4(E)	2'-9"	6'-4"

S.N. 099-0302 (WESTBOUND) WEST ABUTMENT BILL OF MATERIAL

Bar	No.	Size	Length	Shape
h3(E)	10	#5	14'-6"	
h4(E)	5	#5	21'-2"	
h5(E)	2	#5	11'-11"	
h12(E)	12	#6	3'-4"	
p2(E)	8	#7	23'-6"	
p4(E)	8	#7	24'-3"	
p5(E)	4	#4	12'-4"	
s1(E)	20	#6	19'-4"	
s4(E)	1	#6	11'-10"	
s5(E)	1	#6	19'-6"	
s6(E)	14	#5	3'-8"	
u(E)	7	#6	11'-4"	
u1(E)	7	#6	11'-5"	
u2(E)	13	#4	6'-4"	
v1(E)	63	#8	8'-9"	
v2(E)	40	#6	3'-4"	
v3(E)	12	#5	2'-9"	
v6(E)	11	#5	8'-1"	
v7(E)	4	#5	5'-10"	
Structure Excavation			Cu. Yd.	174.2
Concrete Structures			Cu. Yd.	20.9
Reinforcement Bars, Epoxy Coated			Pound	3,960
Furnishing - Piles, HP14x73			Foot	246
Driving Piles			Foot	246
Test Pile, HP14x73			Each	1
Pile Shoes			Each	7

S.N. 099-0302 (WESTBOUND) EAST ABUTMENT BILL OF MATERIAL

Bar	No.	Size	Length	Shape
h6(E)	10	#5	15'-2"	
h7(E)	2	#5	12'-6"	
h10(E)	5	#5	23'-0"	
h12(E)	12	#6	3'-4"	
p(E)	8	#7	24'-0"	
p1(E)	8	#7	24'-9"	
p6(E)	4	#4	12'-10"	
s1(E)	21	#6	19'-4"	
s4(E)	1	#6	11'-10"	
s5(E)	1	#6	19'-6"	
s6(E)	14	#5	3'-8"	
u(E)	7	#6	11'-4"	
u1(E)	7	#6	11'-5"	
u2(E)	12	#4	6'-4"	
v1(E)	65	#8	8'-9"	
v2(E)	40	#6	3'-4"	
v3(E)	13	#5	2'-9"	
v7(E)	4	#5	5'-10"	
v8(E)	12	#5	8'-1"	
Structure Excavation			Cu. Yd.	175.2
Concrete Structures			Cu. Yd.	21.4
Reinforcement Bars, Epoxy Coated			Pound	4,080
Furnishing - Piles, HP14x73			Foot	231
Driving Piles			Foot	231
Pile Shoes			Each	7

S.N. 099-0301 (EASTBOUND) WEST ABUTMENT BILL OF MATERIAL

Bar	No.	Size	Length	Shape
h(E)	10	#5	16'-4"	
h1(E)	7	#5	22'-9"	
h2(E)	2	#5	14'-0"	
h10(E)	12	#6	3'-4"	
p(E)	7	#7	24'-0"	
p1(E)	7	#7	24'-9"	
p3(E)	4	#4	11'-8"	
s(E)	21	#6	16'-4"	
s2(E)	1	#6	10'-4"	
s3(E)	1	#6	16'-6"	
s6(E)	14	#5	3'-8"	
u(E)	6	#6	11'-4"	
u1(E)	6	#6	11'-5"	
u2(E)	13	#4	6'-4"	
v(E)	65	#8	7'-2"	
v2(E)	40	#6	3'-4"	
v3(E)	14	#5	2'-9"	
v4(E)	13	#5	8'-10"	
v5(E)	4	#5	6'-8"	
Structure Excavation			Cu. Yd.	175.6
Concrete Structures			Cu. Yd.	17.6
Reinforcement Bars, Epoxy Coated			Pound	3,660
Furnishing - Piles, HP14x73			Foot	287
Driving Piles			Foot	287
Pile Shoes			Each	7

S.N. 099-0301 (EASTBOUND) EAST ABUTMENT BILL OF MATERIAL

Bar	No.	Size	Length	Shape
h8(E)	10	#5	15'-6"	
h9(E)	2	#5	12'-10"	
h11(E)	7	#5	22'-3"	
h12(E)	12	#6	3'-4"	
p2(E)	7	#7	23'-6"	
p4(E)	7	#7	24'-3"	
p7(E)	4	#4	11'-6"	
s(E)	20	#6	16'-4"	
s2(E)	1	#6	10'-4"	
s3(E)	1	#6	16'-6"	
s6(E)	14	#5	3'-8"	
u(E)	6	#6	11'-4"	
u1(E)	6	#6	11'-5"	
u2(E)	13	#4	6'-4"	
v(E)	63	#8	7'-2"	
v2(E)	40	#6	3'-4"	
v3(E)	12	#5	2'-9"	
v9(E)	4	#5	6'-9"	
v10(E)	12	#5	8'-11"	
Structure Excavation			Cu. Yd.	174.6
Concrete Structures			Cu. Yd.	17.3
Reinforcement Bars, Epoxy Coated			Pound	3,550
Furnishing - Piles, HP14x73			Foot	198
Driving Piles			Foot	198
Test Pile, HP14x73			Each	1
Pile Shoes			Each	7

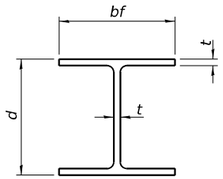

STEEL PILE TABLE

Designation	Depth d	Flange width bf	Web and Flange thickness t	Encasement diameter A
HP 14x117	14¼"	14⅞"	13/16"	30"
x102	14"	14¾"	11/16"	30"
x89	13⅞"	14¾"	⅝"	30"
x73	13⅝"	14⅝"	½"	30"
HP 12x84	12¼"	12¼"	11/16"	24"
x74	12⅛"	12¼"	⅝"	24"
x63	12"	12⅛"	½"	24"
x53	11¾"	12"	7/16"	24"
HP 10x57	10"	10¼"	9/16"	24"
x42	9¾"	10⅛"	7/16"	24"
HP 8x36	8"	8⅛"	7/16"	18"

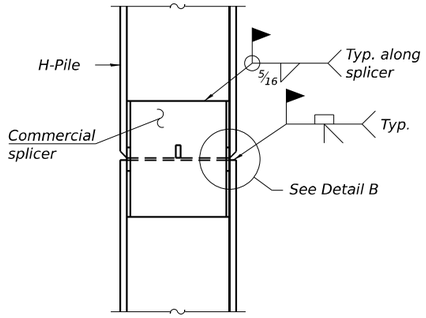

ELEVATION

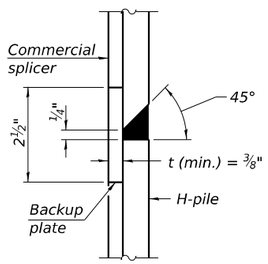

DETAIL "B"

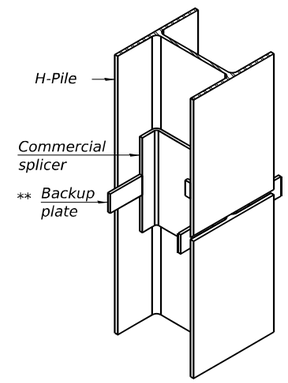

ISOMETRIC VIEW

WELDED COMMERCIAL SPLICE

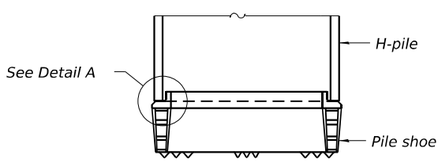

ELEVATION

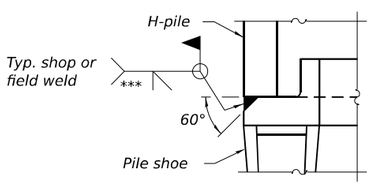

DETAIL A

SHOE ATTACHMENT

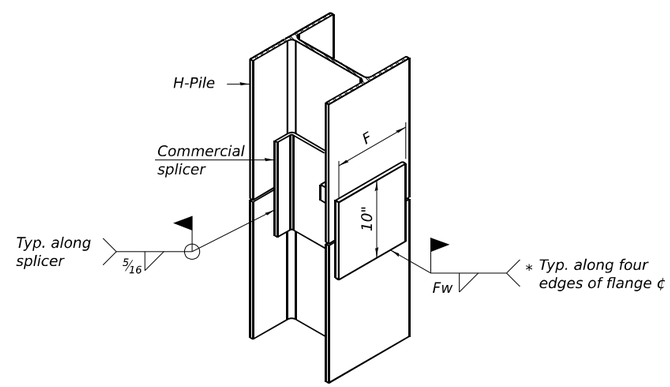

ISOMETRIC VIEW

WELDED COMMERCIAL SPLICE ALTERNATE

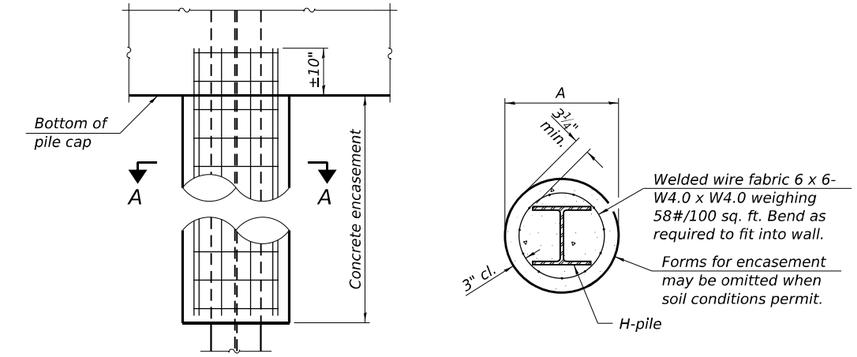

ELEVATION

SECTION A-A

INDIVIDUAL PILE CONCRETE ENCASEMENT

(when specified)

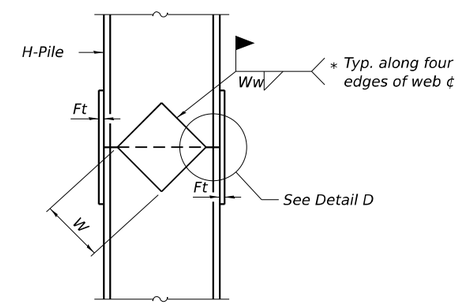

ELEVATION

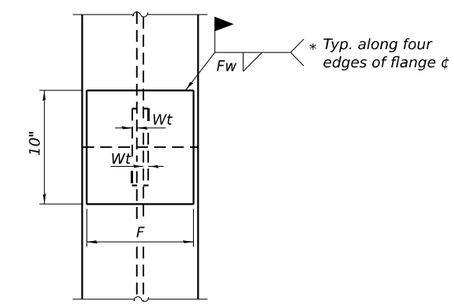

END VIEW

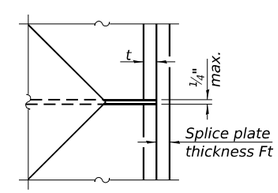

DETAIL D

Designation	F	Ft	Fw	W	Wt	Ww
HP 14x117	12½"	1"	⅞"	7¾"	⅝"	½"
x102	12½"	⅞"	¾"	7¾"	⅝"	½"
x89	12½"	¾"	11/16"	7¾"	⅝"	½"
x73	12½"	⅝"	9/16"	7¾"	⅝"	½"
HP 12x84	10"	⅞"	11/16"	6½"	⅝"	½"
x74	10"	⅞"	11/16"	6½"	⅝"	½"
x63	10"	⅝"	½"	6½"	½"	⅜"
x53	10"	⅝"	½"	6½"	½"	⅜"
HP 10x57	8"	¾"	9/16"	5¼"	½"	⅜"
x42	8"	⅝"	9/16"	5¼"	½"	⅜"
HP 8x36	7"	⅝"	7/16"	4¼"	½"	⅜"

WELDED PLATE FIELD SPLICE

Note:
The steel H-piles shall be according to AASHTO M270 Grade 50.

* Interrupt welds ¼" from end of web and/or each flange.

** Remove portions of backup plates that extend outside the flanges.

*** Weld size per pile shoe manufacturer (5/16" min.).

F-HP 1-1-2020

TRANSYSTEMS

USER NAME = amkluver	DESIGNED - TJA	REVISED -	
	CHECKED - AMD	REVISED -	
PLOT SCALE = NTS	DRAWN - CMD	REVISED -	
PLOT DATE = 6/23/2023	CHECKED - AMD	REVISED -	

STATE OF ILLINOIS
DEPARTMENT OF TRANSPORTATION

PILE DETAILS
STRUCTURE NOS. 099-0301 (EB) & 099-0302 (WB)
SHEET S1-43 OF S1-47 SHEETS

F.A.I. RTE.	SECTION	COUNTY	TOTAL SHEETS	SHEET NO.
I-80	FAI 80 21 STRUCTURE 6	WILL	898	554
		CONTRACT NO. 62R27		
	ILLINOIS	FED. AID PROJECT		

MODEL: Untitled
FILE NAME: pw://transystems-pw.bentley.com:transyscorp-pw1-hosted/Documents/Projects_2018/CH401/401180022/02-TranSystems/CAD/62R27/Sheets/23-Structural/099-0301 & 099-0302/0990301-62R27-043-PileDetails.dgn

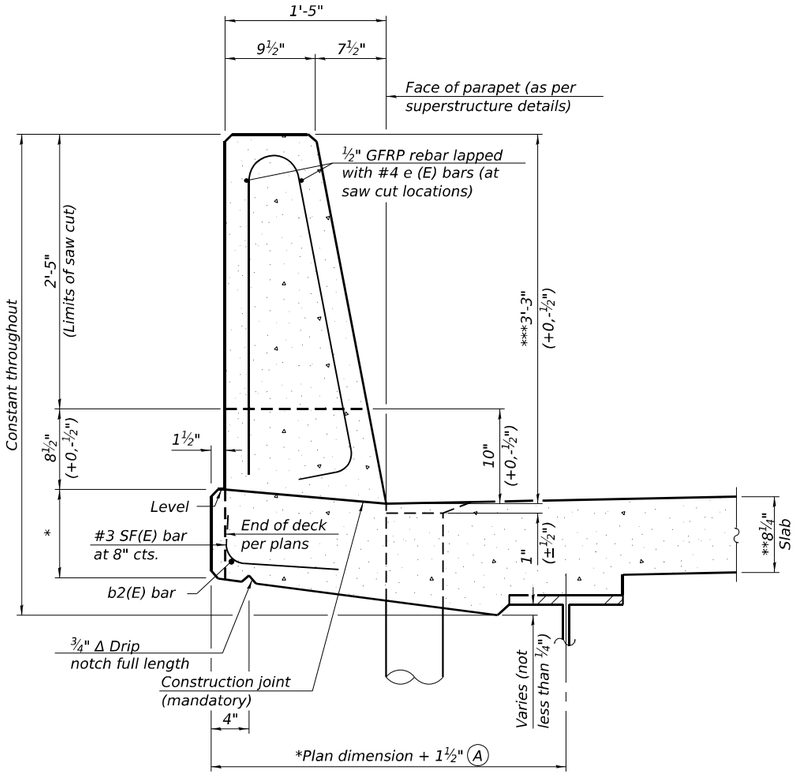

39" CONSTANT-SLOPE PARAPET SECTION

(Showing dimensions, d(E), and ½" Ø GFRP rebar)

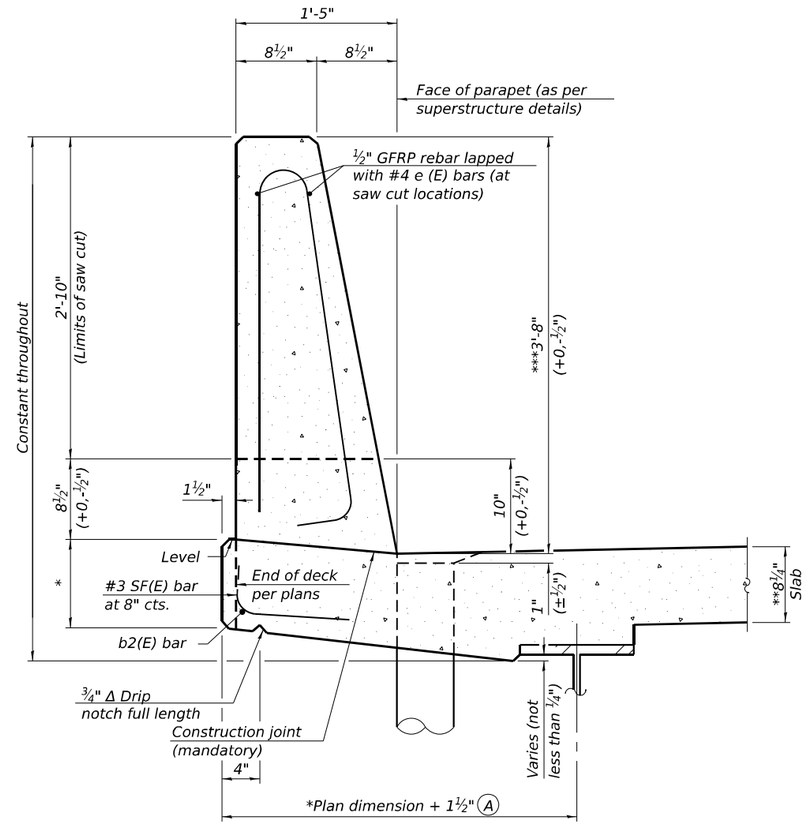

44" CONSTANT-SLOPE PARAPET SECTION

(Showing dimensions, d(E), and ½" Ø GFRP rebar)

Notes:

All dimensions shall remain the same as shown on superstructure details, except dimension A which is to be revised as shown. Additional concrete needed to revlse dimension A = 0.00348 cu. yds./ft. for 39" and 44" parapets.

Place full depth aluminum sheets as shown on superstructure details.

Replace all cork joint filler locations with a full thickness saw cut.

Steel superstructure shown. Other superstructure types similar.

*See Superstructure Details

**Prior to Grinding

***After Grinding

Slipforming of the interior parapets is not allowed.

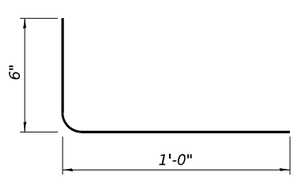

SF(E) BAR

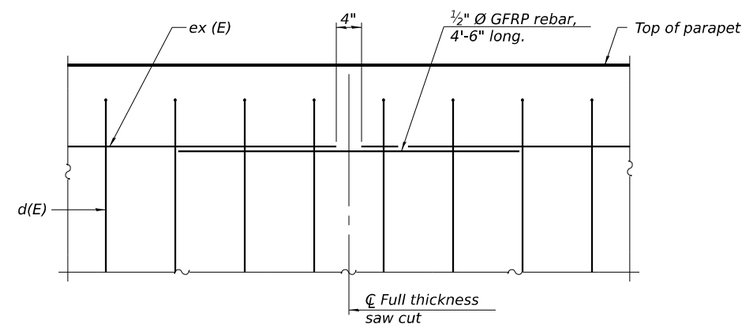

GFRP REBAR STIFFENING DETAIL

(Place as shown in parapet section at each parapet joint location.)

MODEL: Drawing
FILE NAME: pw://transystems-pw.bentley.com:transyscorp-pw1-hosted/Documents/Projects_2018/CH401/401180022/02-TranSystems/CAD/62R27/Sheets/23-Structural/099-0301 & 099-0302/0990301-62R27-044-Slipforming_Details.dgn

TRANSYSTEMS

USER NAME = amkluver	DESIGNED - TJA	REVISED -	
	CHECKED - AMD	REVISED -	
PLOT SCALE = NTS	DRAWN - TJA	REVISED -	
PLOT DATE = 6/23/2023	CHECKED - JE	REVISED -	

STATE OF ILLINOIS
DEPARTMENT OF TRANSPORTATION

CONCRETE PARAPET SLIPFORMING OPTION
STRUCTURE NOS. 099-0301 (EB) & 099-0302 (WB)

SHEET S1-44 OF S1-47 SHEETS

F.A.I. RTE.	SECTION	COUNTY	TOTAL SHEETS	SHEET NO.
I-80	FAI 80 21 STRUCTURE 6	WILL	898	555
		CONTRACT NO. 62R27		
		ILLINOIS FED. AID PROJECT		

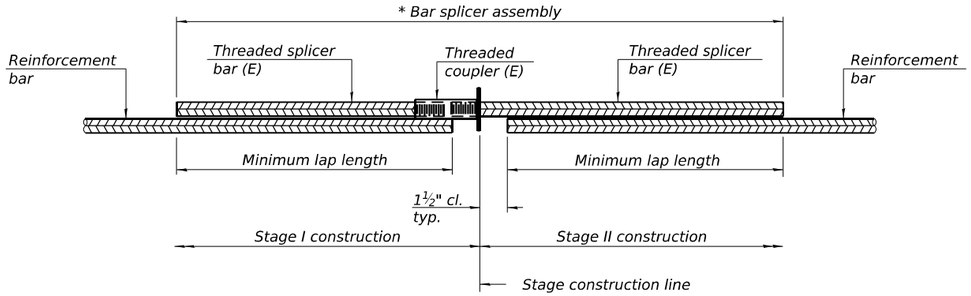

STANDARD BAR SPLICER ASSEMBLY PLAN

(All components shall be provided from one supplier)

Threaded splicer bar length = min. lap length + 1½" + thread length

* Epoxy not required on Bar Splicer Assembly components used in conjunction with black bars.

Location	Bar size	No. assemblies required	Minimum lap length
Westbound Deck	#5	950	3'-8"
Easbound Deck	#5	950	3'-8"
Westbound Diaphragm	#6	32	3'-8"
Easbound Diaphragm	#6	32	3'-8"
Westbound Approach Slab	#5	172	3'-6"
Westbound Approach Slab	#8	122	4'-9"
Eastbound Approach Slab	#5	172	3'-6"
Eastbound Approach Slab	#8	122	4'-9"

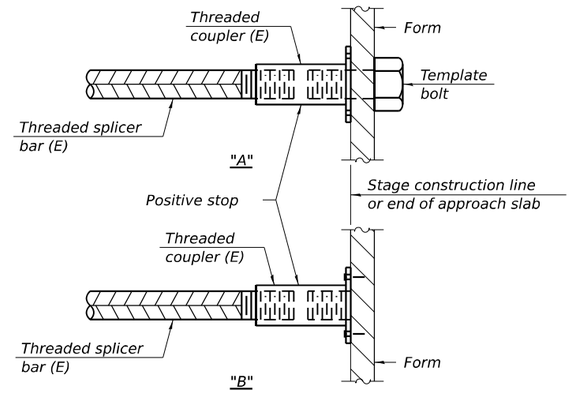

INSTALLATION AND SETTING METHODS

"A" : Set bar splicer assembly by means of a template bolt.
"B" : Set bar splicer assembly by nailing to wood forms or cementing to steel forms.
(E) : Indicates epoxy coating.

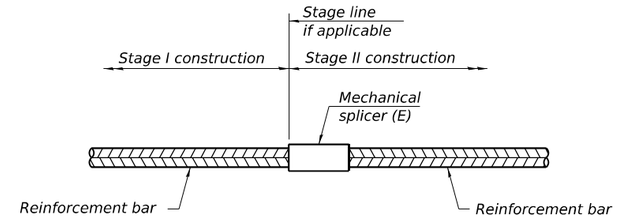

STANDARD MECHANICAL SPLICER

Location	Bar size	No. assemblies required
W. Diaphragm WB	#6	12
W. Diaphragm EB	#6	12
E. Diaphragm WB	#6	12
E. Diaphragm EB	#6	12

Notes:
Splicer bars shall be deformed with threaded ends and have a minimum 60 ksi yield strength.
All reinforcement shall be lapped and tied to the splicer bars.
Bar splicer assemblies shall be epoxy coated according to the requirements for reinforcement bars. See Section 508 of the Standard Specifications.
See approved list of bar splicer assemblies and mechanical splicers for alternatives.

BSD-1 1-1-2020

BORING LOG HR-BSB-01

Wang Engineering
wangeng@wangeng.com
1145 N. Main Street
Lombard/IL/60148
Telephone: 6309539928
Fax: 6309539938

WEI Job No.: 7901-15-01

Client: TranSystems Corporation
Project: I-80 Reconstruction (Houbolt Road to Center Street)
Location: Will County, Illinois

Datum: NAVD 88
Elevation: 604.87 ft
North: 1757424.96 ft
East: 1029622.93 ft
Station: 443+55.59
Offset: 25.83 LT

Elevation (ft)	SOIL AND ROCK DESCRIPTION	Depth (ft)	Sample Type / Recovery	Sample No.	SPT Values (6w/6 in)	Qu (tsf)	Moisture Content (%)
603.6	15-inch thick CONCRETE --PAVEMENT--						
603.1	Gray SANDY GRAVEL --AGGREGATE BASE--						
	Stiff to hard, brown SILTY CLAY LOAM to SILTY CLAY, trace to some gravel; damp --FILL-- --RDR 2--	5		1	6 8 4	1.00 P	19
				2	6 5 9	2.05 B	19
				3	6 12 19	4.10 B	20
	--some gravel--	10		4	7 10 22	5.30 N/6	6
				5	4 9 13	5.33 B	21
		15		6	7 6 8	4.02 B	25
	--L_L(%)=42, P_I(%)=16-- --%Gravel=0.0-- --%Sand=17.2-- --%Silt=57.2-- --%Clay=25.6-- --A-7-6 (21)--			7	3 4 3	2.87 B	24
586.9	Medium dense, brown, medium SAND; wet --RDR 2--	20		8	6 5 7	NP	21
584.4	Hard, brown SILTY CLAY, trace gravel; damp --RDR 2--			9	9 12 18	5.90 B	21
581.9	Medium dense, gray SANDY GRAVEL; moist --RDR 2--			10	15 11 10	NP	10
580.5	Medium dense, brown, medium SAND; damp --RDR 2--	25		11	7 9 8	NP	14
576.9	Medium dense to very dense, brown SANDY GRAVEL; saturated --RDR 3--	30		12	29 35 35	NP	11
		35		13	14 11 14	NP	9
	--lost drilling mud--						
568.1	Dense to very dense, gray SILTY LOAM, trace to some gravel; damp --RDR 3--	40		14	29 25 24	2.46 S	9

GENERAL NOTES

Begin Drilling: 04-21-2021 Complete Drilling: 04-21-2021
Drilling Contractor: Wang Testing Services Drill Rig: 20CME55T[81%]
Driller: R&J Logger: I. Nenn Checked by: C. Marin
Drilling Method: 2.25" IDA HSA to 10 ft; mud rotary thereafter; boring backfilled upon completion

WATER LEVEL DATA

While Drilling: 28.50 ft
At Completion of Drilling: mud in borehole
Time After Drilling: NA
Depth to Water: NA

The stratification lines represent the approximate boundary between soil types; the actual transition may be gradual.

BORING LOG HR-BSB-01

Wang Engineering
wangeng@wangeng.com
1145 N. Main Street
Lombard/IL/60148
Telephone: 6309539928
Fax: 6309539938

WEI Job No.: 7901-15-01

Client: TranSystems Corporation
Project: I-80 Reconstruction (Houbolt Road to Center Street)
Location: Will County, Illinois

Datum: NAVD 88
Elevation: 604.87 ft
North: 1757424.96 ft
East: 1029622.93 ft
Station: 443+55.59
Offset: 25.83 LT

Elevation (ft)	SOIL AND ROCK DESCRIPTION	Depth (ft)	Sample Type / Recovery	Sample No.	SPT Values (6w/6 in)	Qu (tsf)	Moisture Content (%)
558.9	Weathered Bedrock	45		16	44 50/3"	NP	8
556.9	Moderate, light grayish gray, very poor quality, intenssely to moderately fractured DOLOSTONE, gouge area; very closely spaced, highly weathered, horizontal, oblique, and vertical joints, with <0.05 inch opening, slightly rough to rough walls, and 0 - 0.2 inch thick clay infill. --RUN 1: 48.0 to 58.0 feet-- --Recovery= 100%-- --RQD= 18%--	50	CORE	16			
	--RUN 2: 58.0 to 63.0 feet-- --Recovery= 100%-- --RQD= 21%--	60	CORE				
541.9	Boring terminated at 63.00 ft	65		17			
		70					
		75					
		80					

GENERAL NOTES

Begin Drilling: 04-21-2021 Complete Drilling: 04-21-2021
Drilling Contractor: Wang Testing Services Drill Rig: 20CME55T[81%]
Driller: R&J Logger: I. Nenn Checked by: C. Marin
Drilling Method: 2.25" IDA HSA to 10 ft; mud rotary thereafter; boring backfilled upon completion

WATER LEVEL DATA

While Drilling: 28.50 ft
At Completion of Drilling: mud in borehole
Time After Drilling: NA
Depth to Water: NA

The stratification lines represent the approximate boundary between soil types; the actual transition may be gradual.

BORING LOG HR-BSB-01A

Wang Engineering
wangeng@wangeng.com
1145 N. Main Street
Lombard/IL/60148
Telephone: 6309539928
Fax: 6309539938

WEI Job No.: 7901-15-01

Client: TranSystems Corporation
Project: I-80 Reconstruction (Houbolt Road to Center Street)
Location: Will County, Illinois

Datum: NAVD 88
Elevation: 602.35 ft
North: 1757413.35 ft
East: 1029652.28 ft
Station: 443+67.05
Offset: 3.59 RT

Elevation (ft)	SOIL AND ROCK DESCRIPTION	Depth (ft)	Sample Type / Recovery	Sample No.	SPT Values (6w/6 in)	Qu (tsf)	Moisture Content (%)
	Stiff, dark brown SILTY CLAY LOAM --TOPSOIL--			1	3 6 9 9	1.00 P	16
600.9	Stiff, brown SILTY CLAY LOAM, trace gravel; damp --FILL--			2	7 6 7 6	1.00 P	15
598.9	Brown, coarse SANDY GRAVEL; damp --FILL--	5		3	8 10 8 9	0.50 P	21
	Medium stiff to very stiff, brown and gray SILTY CLAY LOAM to CLAY LOAM, trace to little gravel and asphalt; damp --FILL-- --RDR 2--			4	7 4 5 5	2.95 B	19
593.5	Medium stiff, black SILTY CLAY LOAM, trace gravel; moist --FILL-- --RDR 2--	10		5	2 2 3 5	1.80 B	20
				6	3 3 6 9	0.57 B	19
590.6	Medium dense, brown, Gravelly coarse SAND; moist --FILL--			7	10 13 4 5	3.44 B	26
589.6	Stiff to very stiff, brown and gray SILTY CLAY LOAM to SILTY CLAY, trace gravel; damp --RDR 2--	15		8	4 4 6 6	1.64 B	23
589.9	Loose to medium dense, brown, medium SAND, trace gravel; damp --RDR 2--			9	3 2 2 3	NP	14
		20		10	2 2 3 5	NP	10
578.6	Dense, brown Gravelly SAND; damp --RDR 2--	25		11	5 5 5 8	NP	12
				12	6 2 6 9	NP	9
				13	7 5 13 20	NP	5
576.4	Boring terminated at 26.00 ft						
		30					
		35					
		40					

GENERAL NOTES

Begin Drilling: 05-05-2021 Complete Drilling: 05-05-2021
Drilling Contractor: Wang Testing Services Drill Rig: 20D25A [83%]
Driller: J&M Logger: I. Nenn Checked by: C. Marin
Drilling Method: 2.25" IDA HSA; boring backfilled upon completion

WATER LEVEL DATA

While Drilling: DRY
At Completion of Drilling: DRY
Time After Drilling: NA
Depth to Water: NA

The stratification lines represent the approximate boundary between soil types; the actual transition may be gradual.

WANGENGINC 7901501.GPJ WANGENG.GDT 12/3/21

MODEL: Untitled
FILE NAME: pw://transystems-pw.bentley.com:transyscorp-pw1-hosted/Documents/Projects_2018/CH401/401180022/02-TranSystems/CAD/62R27/Sheets/23-Structural/099-0301 & 099-0302/0990301-62R27-046-Boring_1.dgn

TRANSYSTEMS

USER NAME = amkluver	DESIGNED - TJA	REVISED -	
	CHECKED - AMD	REVISED -	
PLOT SCALE = NTS	DRAWN - TJA	REVISED -	
PLOT DATE = 6/23/2023	CHECKED - AMD	REVISED -	

STATE OF ILLINOIS
DEPARTMENT OF TRANSPORTATION

BORING LOGS 1
STRUCTURE NOS. 099-0301 (EB) & 099-0302 (WB)

SHEET S1-46 OF S1-47 SHEETS

F.A.I. RTE.	SECTION	COUNTY	TOTAL SHEETS	SHEET NO.
I-80	FAI 80 21 STRUCTURE 6	WILL	898	557
		CONTRACT NO. 62R27		
		ILLINOIS	FED. AID PROJECT	

BORING LOG HR-BSB-02

Wang Engineering
wangeng@wangeng.com
1145 N. Main Street
Lombard/IL/60148
Telephone: 6309539928
Fax: 6309539938

WEI Job No.: 7901-15-01

Client: TranSystems Corporation
Project: I-80 Reconstruction (Houbolt Road to Center Street)
Location: Will County, Illinois

Datum: NAVD 88
Elevation: 605.66 ft
North: 1757599.41 ft
East: 1029781.34 ft
Station: 445+91.58
Offset: 25.85 LT

Profile	Elevation (ft)	SOIL AND ROCK DESCRIPTION	Depth (ft)	Sample Type / recovery	Sample No.	SPT Values (6w/6 in)	Qu (tsf)	Moisture Content (%)
		15-inch thick CONCRETE --PAVEMENT--						
	604.4	Medium dense, gray SANDY GRAVEL; damp --AGGREGATE BASE--			1	9 8 4	NP	5
	602.4	Medium stiff to very stiff, brown, gray and black SILTY CLAY LOAM to SILTY CLAY, trace gravel; damp --FILL-- --RDR 2-3--	5		2	3 3 7	1.72 B	20
					3	4 8 9	0.82 B	20
			10		4	3 3 6	1.23 B	19
					5	4 5 15	3.77 B	22
			15		6	9 10 8	1.25 P	24
	590.2	Stiff to hard, brown and gray SILTY CLAY LOAM to SILTY CLAY, trace gravel; damp --RDR 2--			7	6 7 9	3.36 B	25
			20		8	2 3 6	1.23 B	23

Profile	Elevation (ft)	SOIL AND ROCK DESCRIPTION	Depth (ft)	Sample Type / recovery	Sample No.	SPT Values (6w/6 in)	Qu (tsf)	Moisture Content (%)
	580.2	Dense to very dense, brown and gray SANDY GRAVEL; wet to saturated --RDR 2-3--			9	6 8 8	3.36 B	20
			25		10	6 6 10	4.26 B	21
					11	20 22 40	NP	11
		--rig chatter; possible cobbles-- --cave-in--	30		12	12 29 52	NP	10
			35		13	36 42 42	NP	12
	568.9	Very dense, gray SILTY LOAM, some gravel; damp --RDR 3-4--			14	23 27 32	NP	9
			40					

WANGENGINC 7901501.GPJ WANGENG.GDT 12/3/21

GENERAL NOTES

Begin Drilling: 04-21-2021 Complete Drilling: 04-21-2021
Drilling Contractor: Wang Testing Services Drill Rig: 20D50T [80%]
Driller: R&J Logger: M. Sadowski Checked by: C. Marin
Drilling Method: 2.25" IDA HSA to 10 ft; mud rotary thereafter; boring backfilled upon completion

WATER LEVEL DATA

While Drilling: 25.50 ft
At Completion of Drilling: mud in borehole
Time After Drilling: NA
Depth to Water: NA

The stratification lines represent the approximate boundary between soil types; the actual transition may be gradual.

BORING LOG HR-BSB-02

Wang Engineering
wangeng@wangeng.com
1145 N. Main Street
Lombard/IL/60148
Telephone: 6309539928
Fax: 6309539938

WEI Job No.: 7901-15-01

Client: TranSystems Corporation
Project: I-80 Reconstruction (Houbolt Road to Center Street)
Location: Will County, Illinois

Datum: NAVD 88
Elevation: 605.66 ft
North: 1757599.41 ft
East: 1029781.34 ft
Station: 445+91.58
Offset: 25.85 LT

Profile	Elevation (ft)	SOIL AND ROCK DESCRIPTION	Depth (ft)	Sample Type / recovery	Sample No.	SPT Values (6w/6 in)	Qu (tsf)	Moisture Content (%)
	559.7	Weathered Bedrock	45		16	28 50/3"	NP	11
	557.7	Strong, light grayish gray, very poor quality, moderately fractured DOLOSTONE; closely spaced, moderately weathered, horizontal, oblique, and vertical joints, with 0-0.2 inch opening, slightly rough walls, and <0.2 inch thick clay infill. --RUN 1: 48.0 to 58.0 feet-- --Recovery= 100%-- --RQD= 7%-- --Q_u= 10,795 psi--	50	CORE	16			
		--RUN 2: 58.0 to 63.0 feet-- --Recovery= 100%-- --RQD= 7%--	60	CORE				

Profile	Elevation (ft)	SOIL AND ROCK DESCRIPTION	Depth (ft)	Sample Type / recovery	Sample No.	SPT Values (6w/6 in)	Qu (tsf)	Moisture Content (%)
	542.7	Boring terminated at 63.00 ft	65		17			
			70					
			75					
			80					

WANGENGINC 7901501.GPJ WANGENG.GDT 12/3/21

GENERAL NOTES

Begin Drilling: 04-21-2021 Complete Drilling: 04-21-2021
Drilling Contractor: Wang Testing Services Drill Rig: 20D50T [80%]
Driller: R&J Logger: M. Sadowski Checked by: C. Marin
Drilling Method: 2.25" IDA HSA to 10 ft; mud rotary thereafter; boring backfilled upon completion

WATER LEVEL DATA

While Drilling: 25.50 ft
At Completion of Drilling: mud in borehole
Time After Drilling: NA
Depth to Water: NA

The stratification lines represent the approximate boundary between soil types; the actual transition may be gradual.

BORING LOG HR-BSB-02A

Wang Engineering
wangeng@wangeng.com
1145 N. Main Street
Lombard/IL/60148
Telephone: 6309539928
Fax: 6309539938

WEI Job No.: 7901-15-01

Client: TranSystems Corporation
Project: I-80 Reconstruction (Houbolt Road to Center Street)
Location: Will County, Illinois

Datum: NAVD 88
Elevation: 602.76 ft
North: 1757567.75 ft
East: 1029793.73 ft
Station: 445+76.41
Offset: 4.57 RT

Profile	Elevation (ft)	SOIL AND ROCK DESCRIPTION	Depth (ft)	Sample Type / recovery	Sample No.	SPT Values (6w/6 in)	Qu (tsf)	Moisture Content (%)
		Very stiff, brown SILTY CLAY LOAM, trace gravel; damp --TOPSOIL--			1	4 7 9 12	2.00 P	14
	601.3	Medium stiff to stiff, brown SILTY CLAY to SILTY CLAY LOAM, trace gravel; damp --FILL-- --RDR 2--			2	6 6 4 5	1.72 B	17
			5		3	3 2 4 5	1.23 B	19
					4	4 3 6 7	1.00 P	18
	593.9	ASPHALT fragments			6	3 33 50/2"	0.57 B	16
	593.3	--FILL--	10					
		Dense, brown Gravelly LOAM; moist --FILL-- --RDR 2--			6	11 20 20 12	NP	7
	591.0	Stiff, brown SILTY CLAY, trace gravel; damp --FILL-- --RDR 2--			7	4 6 4 6	1.50 P	25
	589.3	Very stiff, brown SILTY CLAY; damp --RDR 2--	15		8	4 5 7 8	3.28 B	21
					9	6 8 10 10	2.06 B	23
			20		10	3 6 9 13	3.28 B	19

Profile	Elevation (ft)	SOIL AND ROCK DESCRIPTION	Depth (ft)	Sample Type / recovery	Sample No.	SPT Values (6w/6 in)	Qu (tsf)	Moisture Content (%)
	581.8	Dense to very dense, brown, medium to coarse SAND, little gravel; damp --RDR 2--			11	7 18 19 21	NP	5
					12	17 22 28 29	NP	10
			25		13	18 24 30 31	NP	4
	576.8	Boring terminated at 26.00 ft						
			30					
			35					
			40					

WANGENGINC 7901501.GPJ WANGENG.GDT 12/3/21

GENERAL NOTES

Begin Drilling: 05-05-2021 Complete Drilling: 05-05-2021
Drilling Contractor: Wang Testing Services Drill Rig: 20D25A [83%]
Driller: J&M Logger: I. Nenn Checked by: C. Marin
Drilling Method: 2.25" IDA HSA; boring backfilled upon completion

WATER LEVEL DATA

While Drilling: DRY
At Completion of Drilling: DRY
Time After Drilling: NA
Depth to Water: NA

The stratification lines represent the approximate boundary between soil types; the actual transition may be gradual.

MODEL: Untitled
FILE NAME: pw://transystems-pw.bentley.com:transyscorp-pw1-hosted/Documents/Projects_2018/CH401/401180022/02-TranSystems/CAD/62R27/Sheets/23-Structural/099-0301 & 099-0302/0990301-62R27-047-Boring_2.dgn

TRANSYSTEMS

USER NAME = amkluver	DESIGNED - TJA	REVISED -	
	CHECKED - AMD	REVISED -	
PLOT SCALE = NTS	DRAWN - TJA	REVISED -	
PLOT DATE = 6/23/2023	CHECKED - AMD	REVISED -	

STATE OF ILLINOIS
DEPARTMENT OF TRANSPORTATION

BORING LOGS 2
STRUCTURE NOS. 099-0301 (EB) & 099-0302 (WB)

SHEET S1-47 OF S1-47 SHEETS

F.A.I. RTE.	SECTION	COUNTY	TOTAL SHEETS	SHEET NO.
I-80	FAI 80 21 STRUCTURE 6	WILL	898	558
		CONTRACT NO. 62R27		
	ILLINOIS	FED. AID PROJECT		

95%
2-5-94

STATE OF ILLINOIS
DEPARTMENT OF TRANSPORTATION
DIVISION OF HIGHWAYS

FAU RTE	SECTION	COUNTY	TOTAL SHEETS	SHEET NO.
0325	99-2(K & HB-1-R)	WILL	1	
F.A.M.S. NO.		PROJECT HDP-9105(001)		

D-91-362-89

FOR INDEX OF SHEETS, SEE SHEET NO. 2

PLANS FOR PROPOSED FEDERAL AID HIGHWAY

FAU ROUTE 0325 (HOUBOLT ROAD) AT FAI ROUTE 80
PHASE II
SECTION: 99-2(K & HB-1-R)
JOLIET JUNIOR COLLEGE TO U.S. ROUTE 6
NEW INTERCHANGE, PAVEMENT RECONSTRUCTION AND TRAFFIC SIGNALS
PROJECT: HDP-9105(001)

WILL COUNTY
C-91-362-89

PROJECT LOCATED IN THE CITY OF JOLIET TROY TOWNSHIP

TRAFFIC DATA

I-80 ADT = 40,000
HOUBOLT ROAD ADT = 11,000

DESIGN DESIGNATION

I-80 4800(2005)
TRUNK 39.19(CRC-20)

HOUBOLT ROAD 1600(2005)
URBAN ARTERIAL 1.13(B-20)

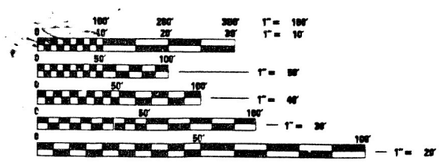

FULL SIZE PLANS HAVE BEEN PREPARED USING STANDARD ENGINEERING SCALES. REDUCED SIZED PLANS WILL NOT CONFORM TO STANDARD SCALES. IN MAKING MEASUREMENTS ON REDUCED PLANS, THE ABOVE SCALES MAY BE USED

REPLACES 099-0201

CONSULTANT SERVICE ENGINEER
JOANNE DESILVA (708)705-4594

CONTRACT NO. 80507

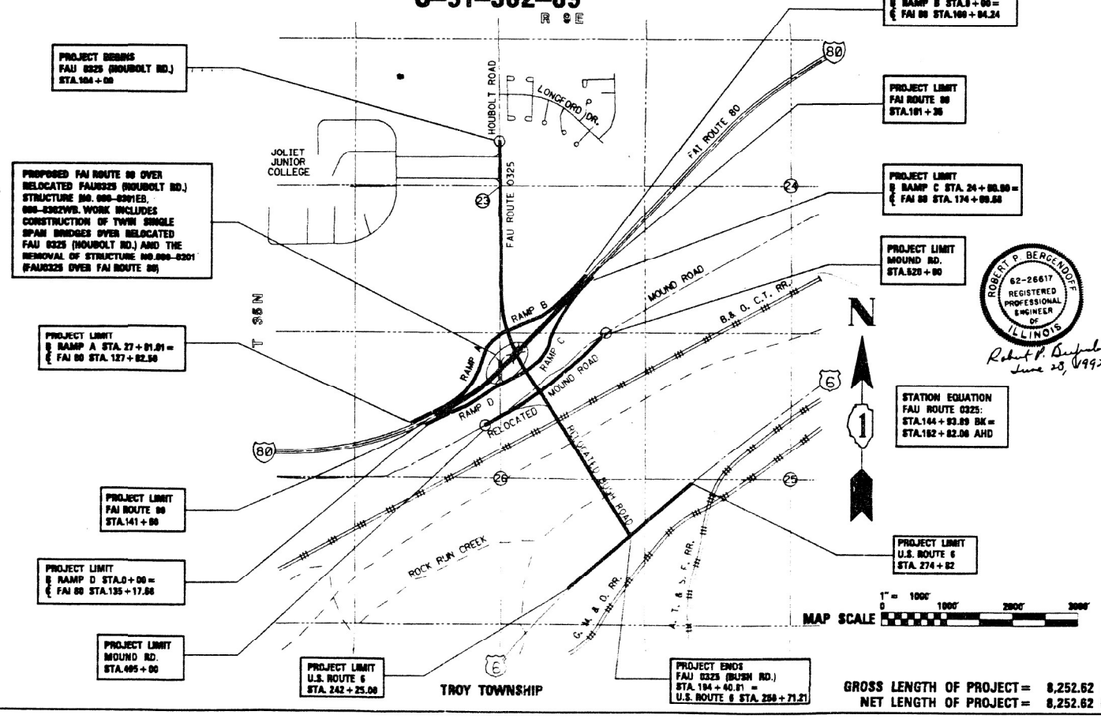

ROBERT P. BERGENDOFF 62-26617 REGISTERED PROFESSIONAL ENGINEER OF ILLINOIS
Robert P. Bergendoff June 23, 1992

LOCATION OF SECTION INDICATED THUS:-

STATE OF ILLINOIS
DEPARTMENT OF TRANSPORTATION
DIVISION OF HIGHWAYS

SUBMITTED June 22 19 92
EXAMINED 19
PASSED July 19 92
APPROVED 19

DEPARTMENT OF TRANSPORTATION
FEDERAL HIGHWAY ADMINISTRATION
APPROVED
DATE

GROSS LENGTH OF PROJECT = 8,252.62 FT. = 1.56 MILES
NET LENGTH OF PROJECT = 8,252.62 FT. = 1.56 MILES

PRINTED BY THE AUTHORITY OF THE STATE OF ILLINOIS

Will 99-2(K&HB-1-R) Sheets 1 Thru 100

TRANSYSTEMS	USER NAME = amkluver	DESIGNED -	REVISED -	STATE OF ILLINOIS DEPARTMENT OF TRANSPORTATION	EXISTING PLANS STRUCTURE NO. 099-0301 & 099-0302	F.A.I. RTE.	SECTION	COUNTY	TOTAL SHEETS	SHEET NO.
		CHECKED -	REVISED -			I-80	FAI 80 21 STRUCTURE 6	WILL	898	559
	PLOT SCALE = NTS	DRAWN -	REVISED -					CONTRACT NO. 62R27		
	PLOT DATE = 6/23/2023	CHECKED -	REVISED -		SHEET SE1-01 OF SE1-48 SHEETS		ILLINOIS	FED. AID PROJECT		

MODEL: Drawing Views
FILE NAME: pw://transystems-pw.bentley.com:transyscorp-pw1-hosted/Documents/Projects_2018/CH401/401180022/02-TranSystems/CAD/62R27/Sheets/23-Structural/099-0301 & 099-0302 Existing/0990301EX-62R27-001-Existing Plans 01.dgn

F.A.I. RTE.	SECTION	COUNTY	TOTAL SHEETS	SHEET NO.
0325		WILL	286	155A
STA.		TO STA.		
FED. ROAD DIST. NO.	ILLINOIS	FED. AID PROJECT		

Sheet S-1 of S-26

BENCH MARK

Illinois Division of Highways Survey
Tablet on top of Center Crash Wall of Pier 1
Existing Structure NO. 099-0201 over FAI-80
Sta. 147+51.45 (FAI-80)
Elev.595.21

STAGING

Traffic shall be Detoured

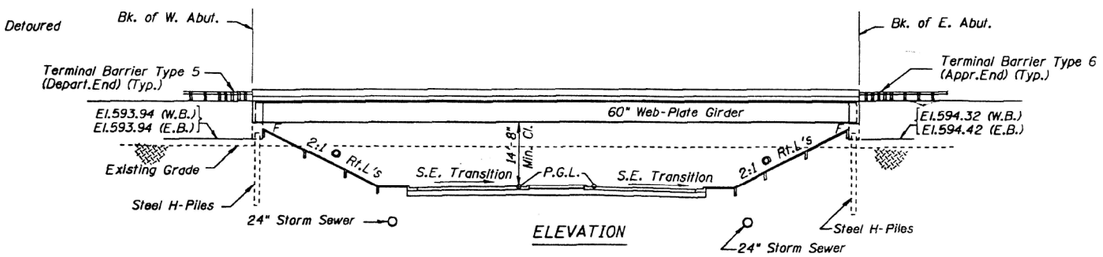

ELEVATION

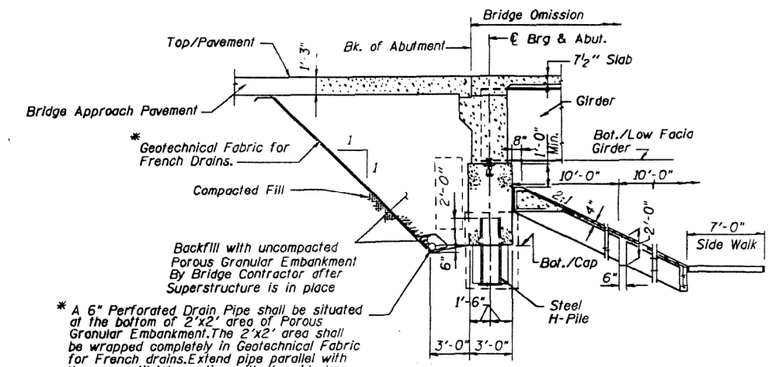

* A 6" Perforated Drain Pipe shall be situated at the bottom of 2'x2' area of Porous Granular Embankment. The 2'x2' area shall be wrapped completely in Geotechnical Fabric for French drains. Extend pipe parallel with the cap until intersecting with the sideslope. and riprap.

SECTION THRU ABUTMENT AND SLOPE WALL
(⊙ Rt. L's)

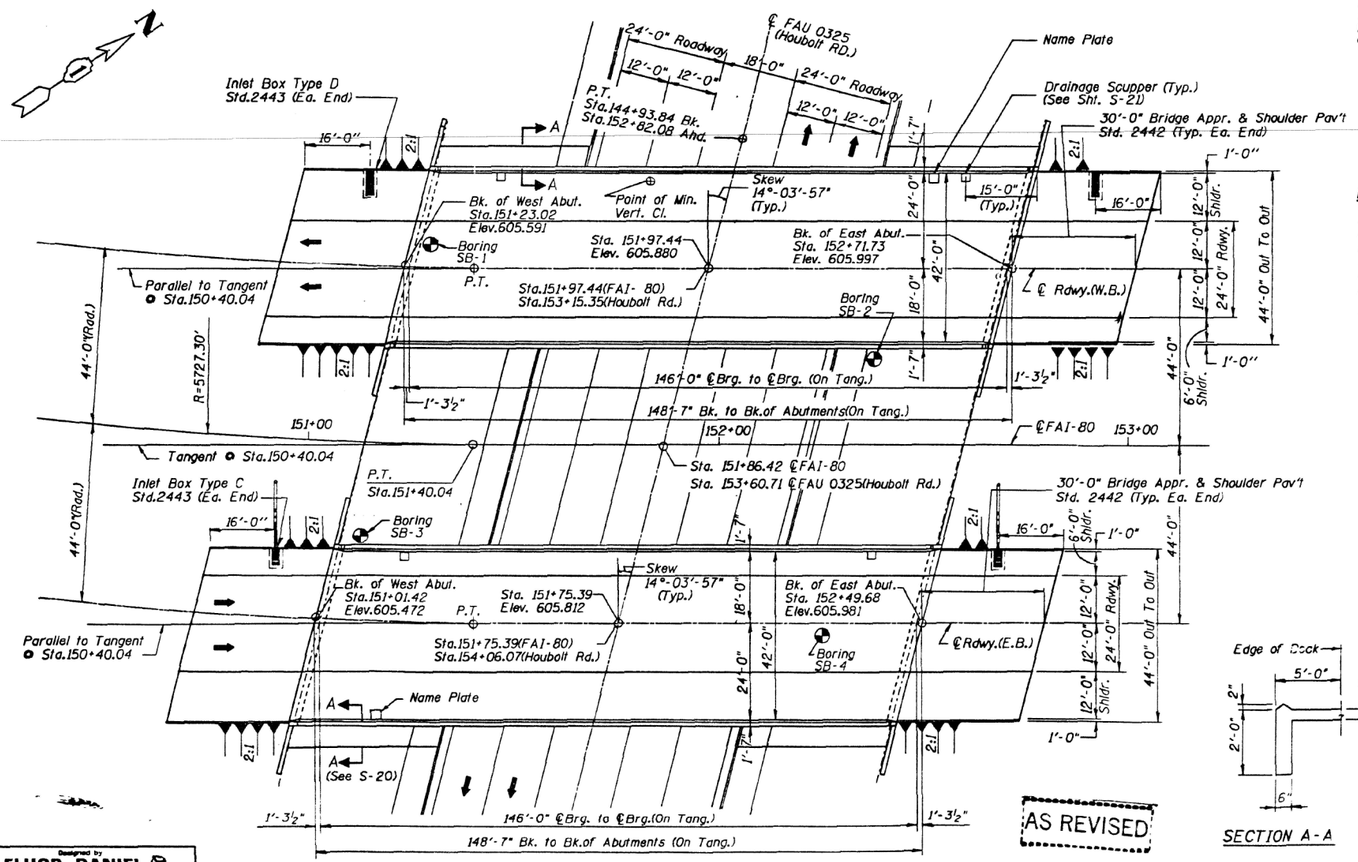

PLAN

AS REVISED

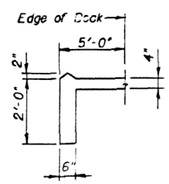

SECTION A-A

HORIZ. CURVE DATA

FAI-80

PC Sta.105+31.53
PI Sta. 129+68.73
PT Sta. 151+40.04 L=4608.51'
Δ =46°-06'12.5" T=2437.20'
D=01°-00'-01" E=497.00'
R=5727.30'
SE=.02'/Ft Sta.150+71 to Sta. 153+02
Transition - Sta.149+86 to 150+71
Sta.153+02 to 154+72

FAU 0325

PC Sta. 135+07.84
PI Sta. 141+14.11
PT Sta. 144+93.84 Bk.= Sta.152+82.08 Ahd. L=986.00'
Δ=32°-02'-42" T=506.27'
D=03°-15'-00" E=71.25'
R=1762.95'
SE=.03'/Ft Sta. 135+85 to Sta. 144+17
Transition - Sta.144+17 to 154+37

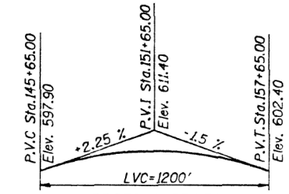

PROFILE GRADE
PROP. FAI-80 (E.B. & W.B.)
(Along ℄ Roadway)

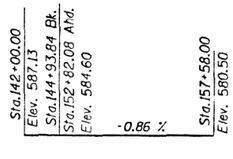

PROFILE GRADE
FAU 0325 (Prop. Houbolt Road)

STATION 151+75.39
BUILT 1994 BY
STATE OF ILLINOIS
FAI RTE 80
PROJ. HDP-9105(001)
LOADING HS20
STR. NO. 099-0301 E.B.

NAME PLATE
See Std. 2113

STATION 151+97.44
BUILT 1993 BY
STATE OF ILLINOIS
FAI RTE 80
PROJ. HDP-9105(001)
LOADING HS20
STR. NO. 099-0302 W.B.

NAME PLATE
See Std. 2113

APPROVED
FOR STRUCTURAL ADEQUACY ONLY
Ralph E. Anderson
Engineer of Bridges and Structures

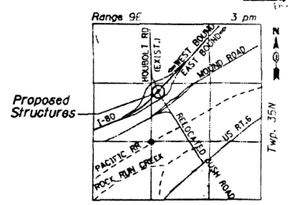

LOCATION MAP

STATE OF ILLINOIS
DMYTRO WESOLOWSKYJ
No. 81-3150
REGISTERED STRUCTURAL ENGINEER

Dmytro Wesolowskyj, Illinois S.E. 081-003150

Designed by
FLUOR DANIEL
Job No. 836100 Chicago, Illinois 60606
DRAWN - J. Gaw
DESIGNED - B.K.
CHECKED - B.K.
APPROVED -
SCALE - NONE
DATE - 8-23-97

REVISIONS	
NAME	DATE

GENERAL PLAN & ELEVATION

STATE OF ILLINOIS
DEPARTMENT OF TRANSPORTATION
SECTION 99-2 (K & HB-1-R)
FAI-80 OVER HOUBOLT RD. (FAU-0325)
SN 099-0301 E.B. AND 099-0302 W.B.
PHASE II
WILL COUNTY

As Revised - 2-3-93 FMF

MODEL: Drawing Views
FILE NAME: pw://transystems-pw.bentley.com:transyscorp-pw1-hosted/Documents/Projects_2018/CH401/401180022/02-TranSystems/CAD/62R27/Sheets/23-Structural/099-0301 & 099-0302 Existing/09903301EX-62R27-001-Existing Plans 02.dgn

TRANSYSTEMS	USER NAME = amkluver	DESIGNED -	REVISED -	STATE OF ILLINOIS DEPARTMENT OF TRANSPORTATION	EXISTING PLANS STRUCTURE NO. 099-0301 & 099-0302	F.A.I. RTE.	SECTION	COUNTY	TOTAL SHEETS	SHEET NO.
		CHECKED -	REVISED -			I-80	FAI 80 21 STRUCTURE 6	WILL	898	560
	PLOT SCALE = NTS	DRAWN -	REVISED -			CONTRACT NO. 62R27				
	PLOT DATE = 6/23/2023	CHECKED -	REVISED -		SHEET SE1-02 OF SE1-48 SHEETS	ILLINOIS	FED. AID PROJECT			

GENERAL NOTES

INDEX OF SHEETS

STATE STANDARDS INCLUDED

NO.	TITLE
2113-2	DETAIL OF NAME PLATE FOR BRIDGES

STRUCTURAL STEEL

- FASTENERS SHALL BE HIGH STRENGTH BOLTS, BOLTS $\frac{7}{8}$" DIAMETER. OPEN HOLES $\frac{15}{16}$" DIAMETER, UNLESS OTHERWISE NOTED.
- CALCULATED WEIGHT OF STRUCTURAL STEEL = 775,000 LBS. (AASHTO M270 GR.36)
- ALL WELDING SHALL CONFORM TO THE AASHTO/AWS DLS BRIDGE WELDING CODE AND SUBSEQUENT AASHTO INTERIM SPECIFICATIONS.
- FIELD WELDING OF CONSTRUCTION ACCESSORIES WILL NOT BE PERMITTED TO THE BOTTOM FLANGE OF BEAMS OR GIRDERS NOR TO THE TOP FLANGE FOR A DISTANCE EQUAL TO ONE-FOURTH THE SPAN LENGTH EACH WAY FROM THE PIER SUPPORTS. FIELD WELDING IN OTHER AREAS WILL BE PERMITTED ONLY WHEN APPROVED BY THE ENGINEER.
- ANCHOR BOLTS SHALL BE SET BEFORE BOLTING CROSS FRAMES OVER SUPPORTS.
- THE ZINC-SILICATE AND VINYL PAINT SYSTEM SHALL BE USED FOR SHOP AND FIELD PAINTING OF STRUCTURAL STEEL EXCEPT WHERE OTHERWISE NOTED. THE COLOR OF THE VINYL FINISH COAT FOR THE OUTSIDE FACES OF FASCIA GIRDERS SHALL BE MUNSELL NO. 7.5 G4/8 INTERSTATE GREEN. THE COLOR OF THE VINYL FINISH COAT FOR THE INTERIOR GIRDERS SHALL BE MUNSELL NO. 10 Y 7/1 LIGHT GREY.
- THE MAIN LOAD CARRYING MEMBER COMPONENTS SUBJECT TO TENSILE STRESS SHALL CONFORM TO THE SUPPLEMENTAL REQUIREMENTS FOR NOTCH TOUGHNESS ZONE 2. THESE COMPONENTS ARE TENSION FLANGES AND WEBS OF PLATE GIRDERS AND ALL SPLICE PLATE MATERIAL FOR GIRDERS EXCEPT FILL PLATES.
- ALL GIRDER FIELD SPLICES, DIAPHRAGMS & CROSS FRAMES CONNECTIONS SHALL BE BOLTED USING $\frac{7}{8}$"DIAMETER HIGH STRENGTH BOLTS CONFORMING TO AASHTO M164. GIRDERS SPLICES SHALL BE SUBPUNCHED AND REAMED ASSEMBLED IN THE SHOP TO PROPER CAMBER.

CAST-IN-PLACE CONCRETE

- ALL BRIDGE SUPERSTRUCTURE AND SUBSTRUCTURE CONCRETE SHALL BE 3500 PSI CONCRETE. CONCRETE FOR PARAPET SHALL BE CHERT FREE.
- ALL EXPOSED CONCRETE EDGES SHALL HAVE A 3/4"x3/4" CHAMFER, EXCEPT WHERE SHOWN OTHERWISE. CHAMFER ON VERTICAL EDGES SHALL BE CONTINUED A MINIMUM OF ONE FOOT BELOW FINISHED GROUND LEVEL.

REINFORCING BARS

- REINFORCEMENT BARS SHALL CONFORM TO THE REQUIREMENTS OF AASHTO M-31, M-42 OR M-53 GRADE 60.
- COVER FROM THE FACE OF CONCRETE TO FACE OF REINFORCEMENT BARS SHALL BE 3" FOR SURFACES FORMED AGAINST EARTH AND 2" FOR ALL OTHER SURFACES UNLESS OTHERWISE SHOWN.
- REINFORCEMENT BAR BENDING DIMENSIONS ARE OUT TO OUT.
- REINFORCEMENT BENDING DETAILS SHALL BE IN ACCORDANCE WITH THE "MANUAL OF STANDARD PRACTICE FOR DETAILING REINFORCED CONCRETE STRUCTURES", ACI 315, LATEST EDITION.
- REINFORCEMENT BARS DESIGNATED "(E)" SHALL BE EPOXY COATED.

CONSTRUCTION

DO NOT SCALE DIMENSIONS FOR CONSTRUCTION.

NO CONSTRUCTION JOINTS EXCEPT THOSE SHOWN ON THE PLANS WILL BE ALLOWED UNLESS ORDERED BY THE ENGINEER.

THE CONTRACTOR SHALL DRIVE ONE HP14X73 TEST PILE IN A PERMANENT LOCATION AT EACH ABUTMENT AS DIRECTED BY THE ENGINEER BEFORE ORDERING THE REMAINDER OF PILES.

SLOPE WALL SHALL BE REINFORCED WITH WELDED WIRE FABRIC, 6X6 - W4.0 x W4.0, WEIGHING 58 LBS. PER 100 SQ. FT.

THE EMBANKMENT CONFIGURATION SHOWN SHALL BE THE MINIMUM EMBANKMENT THAT MUST BE CONSTRUCTED PRIOR TO CONSTRUCTION OF THE ABUTMENT.

ALL ELECTRICAL CONDUIT TO BE MOUNTED ON THE BRIDGE SHALL BE ATTACHED TO THE CONCRETE BY EXPANSION ANCHORS, NO CONDUIT WILL BE ATTACHED TO THE STRUCTURAL STEEL.

DESIGN CRITERIA

DESIGN SPECIFICATIONS

AASHTO 1989 STANDARD SPECIFICATIONS FOR HIGHWAY BRIDGES AND ALL SUBSEQUENT INTERIMS THRU 1991.

STANDARD SPECIFICATIONS FOR ROAD AND BRIDGE CONSTRUCTION FOR THE ILLINOIS DEPARTMENT OF TRANSPORTATION, ADOPTED JULY 1, 1988 AND SUBSEQUENT PROVISIONS THRU 1991. **

DESIGN LOADING

LIVE LOAD HS 20-44 AND ALTERNATE MILITARY LOADING
FUTURE WEARING SURFACE = 25 PSF.

DESIGN METHOD

LOAD FACTOR DESIGN IS USED FOR STRUCTURAL STEEL AND STRENGTH DESIGN FOR REINFORCED CONCRETE.

CONCRETE

f'c - COMPRESSIVE STRENGTH = 3,500 PSI.

REINFORCEMENT

fy = 60,000 PSI

STRUCTURAL STEEL

fy - YIELD STRENGTH (AASHTO M270 GRADE 36) = 36,000 PSI

MAXIMUM LIVE LOAD DEFLECTION

SPAN LENGTH/800

TOTAL BILL OF MATERIAL FOR BOTH STRUCTURES

SN 099-0301 E.B. AND SN 099-0302 W.B.
AND SN 099-0201 REMOVAL

ITEM	UNIT	SUPER	SUB	TOTAL
CLASS X CONCRETE SUPERSTRUCTURE	CU. YD.	410.8	-	410.8
CLASS X CONCRETE	CU. YD.	-	260.0	260.0
BRIDGE DECK GROOVING	SQ. YD.	1,388	-	1,388
POROUS GRANULAR EMBANKMENT	CU. YD.	-	672	672
FURNISHING AND ERECTING STRUCTURAL STEEL	L. SUM	1	-	1
STUD SHEAR CONNECTORS	EACH	3,570	-	3,570
REINFORCEMENT BARS EPOXY COATED	LBS.	80,640	24,200	104,840
FURNISHING STEEL PILES HP 14X73	L. FT.	-	1,287	1,287
DRIVING STEEL PILES	L. FT.	-	1,183	1,183
TEST PILES	EACH	-	4	4
DRAINAGE SCUPPERS	EACH	4	-	4
DRAINAGE SYSTEM	Lum Sum	1	-	1
SLOPE WALL 4 IN.	SQ. YD.	-	515	515
** PROTECTIVE COAT	SQ. YD.	242	-	242
NAME PLATE	EACH	2	-	2
STRUCTURE EXCAVATION	CU. YD.		40	40
REMOVAL OF EXISTING STRUCTURES	EACH	1	-	1
PROTECTIVE SHIELD	SQ. YD.	200	-	200

** PARAPET ONLY

AS REVISED

As Revised 2-3-93 PMP

REVISIONS	
NAME	DATE

INDEX OF SHEETS, GENERAL NOTES AND QUANTITIES

STATE OF ILLINOIS
DEPARTMENT OF TRANSPORTATION
SECTION 99-2 (K & HB-1-R)
FAI-80 OVER HOUBOLT RD. (FAU-0325)
SN 099-0301 E.B. AND 099-0302 W.B.
PHASE II
WILL COUNTY

Designed by FLUOR DANIEL
Job No. 836700 Chicago, Illinois 60606
DRAWN: D.P. APPROVED:
DESIGNED: D.P./D.R. SCALE: = NONE
CHECKED: D.P. DATE: 9-23-92

F.A.U. RTE.	SECTION	COUNTY	TOTAL SHEETS	SHEET NO.
0325	*	WILL	286	157
STA.		TO STA.		
FED. ROAD DIST. NO.	ILLINOIS	FED. AID PROJECT -		

*99-2 (K & HB-1-R)

Sheet S-3 of S-26

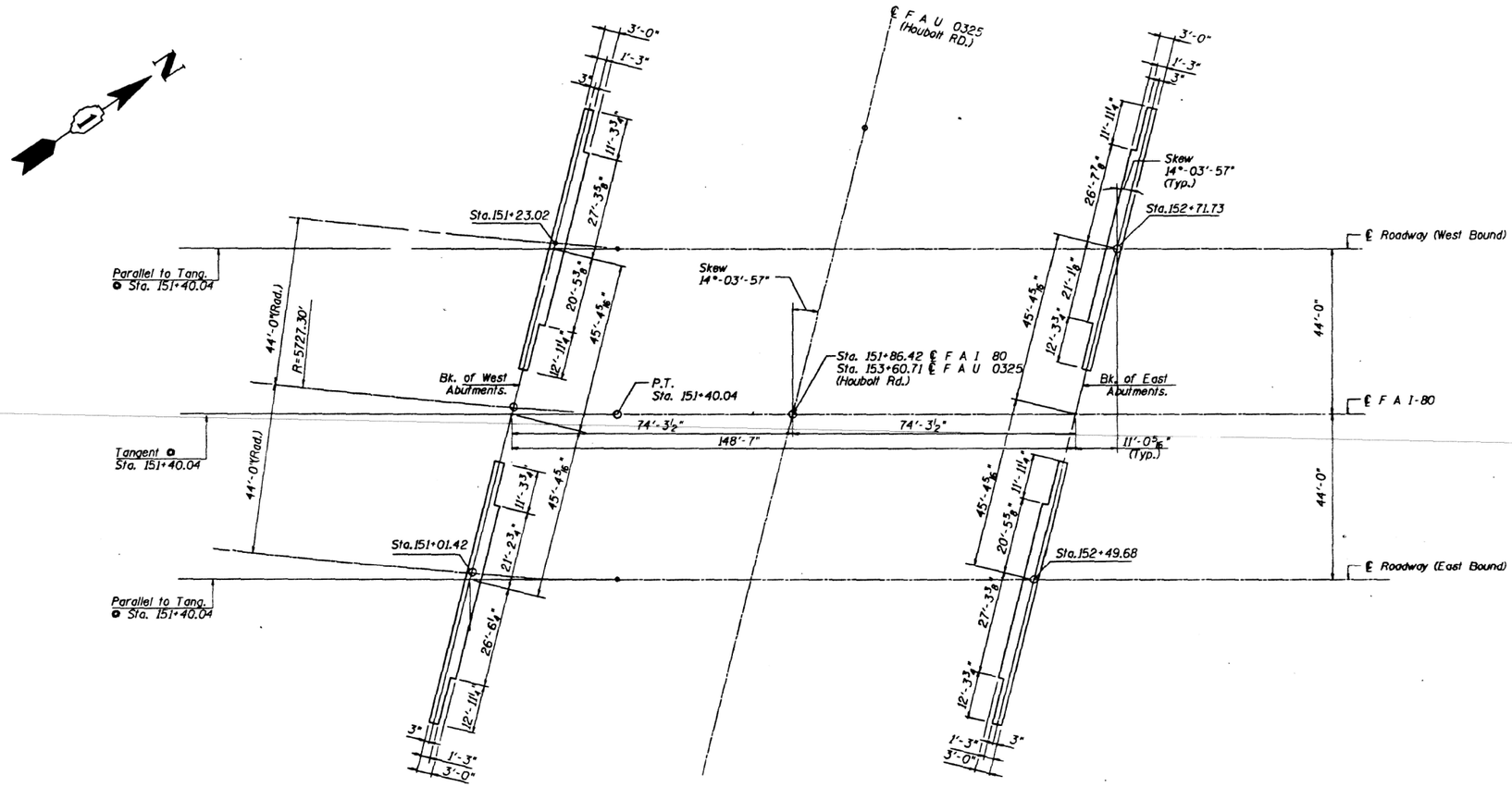

FOOTING LAYOUT

Designed by
FLUOR DANIEL
Chicago, Illinois 60606
JOB NO. 834.TOC
DRAWN - J.J. SHAW
DESIGNED - J. SHAW
CHECKED - G.P.
APPROVED -
SCALE : NONE
DATE : 6-25-97

REVISIONS	
NAME	DATE

FOOTING LAYOUT

STATE OF ILLINOIS
DEPARTMENT OF TRANSPORTATION
SECTION 99-2 (K & HB-1-R)
FAI-80 OVER HOUBOLT RD. (FAU-0325)
SN 099-0301 E.B. AND 099-0302 W.B.
PHASE II
WILL COUNTY

MODEL: Drawing Views
FILE NAME: pw://transystems-pw.bentley.com:transyscorp-pw1-hosted/Documents/Projects_2018/CH401/401180022/02-TranSystems/CAD/62R27/Sheets/23-Structural/099-0301 & 099-0302 Existing/0990301EX-62R27-001-Existing Plans 04.dgn

TRANSYSTEMS

USER NAME = amkluver	DESIGNED -	REVISED -	
	CHECKED -	REVISED -	
PLOT SCALE = NTS	DRAWN -	REVISED -	
PLOT DATE = 6/23/2023	CHECKED -	REVISED -	

STATE OF ILLINOIS
DEPARTMENT OF TRANSPORTATION

EXISTING PLANS
STRUCTURE NO. 099-0301 & 099-0302

SHEET SE1-04 OF SE1-48 SHEETS

F.A.I. RTE.	SECTION	COUNTY	TOTAL SHEETS	SHEET NO.
I-80	FAI 80 21 STRUCTURE 6	WILL	898	562
		CONTRACT NO. 62R27		
	ILLINOIS	FED. AID PROJECT		

FAU RTE.	SECTION	COUNTY	TOTAL SHEETS	SHEET NO.
0325	*	WILL	286	158
STA.		TO STA.		
FED. ROAD DIST. NO.		ILLINOIS	FED. AID PROJECT :	

*99-2 (K & HB-1-R)

Sheet S-4 of S-26

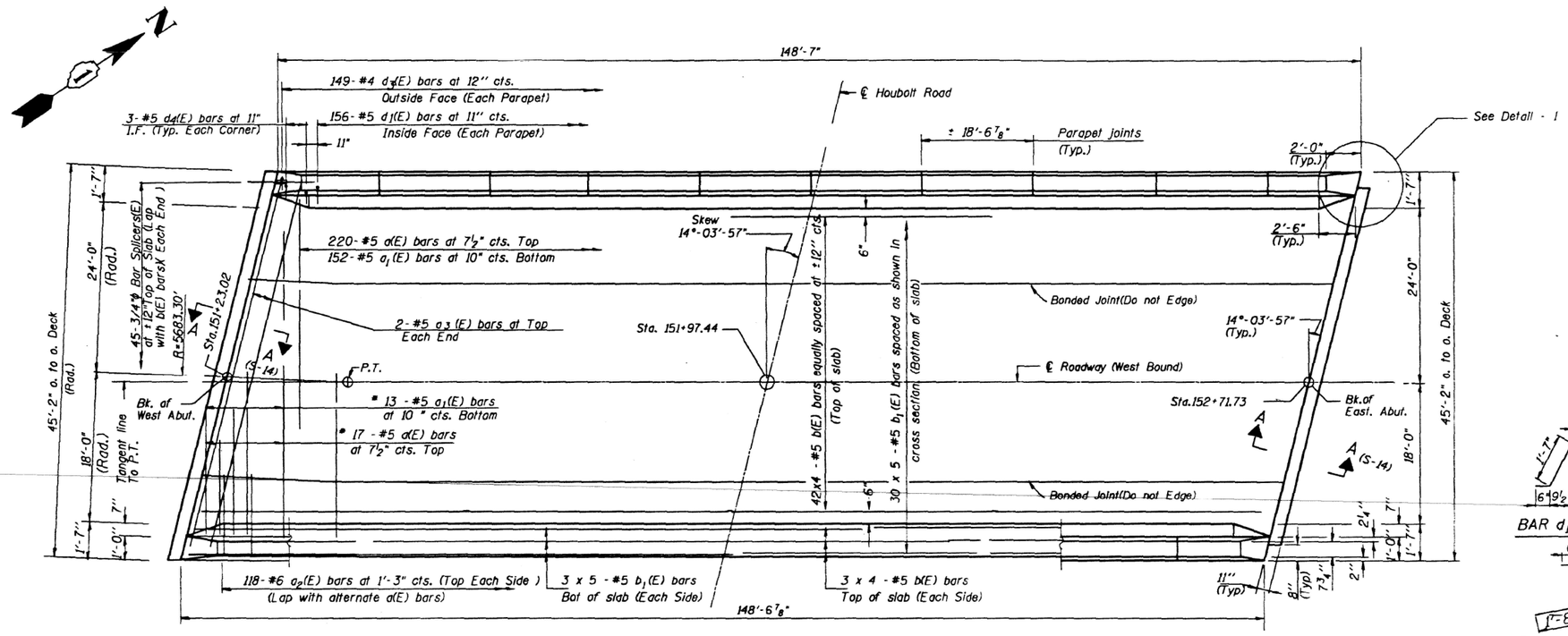

DECK PLAN

* Order d(E) & a_1(E) bars full length. Cut to fit skew and use remainder of bars in opposite end.

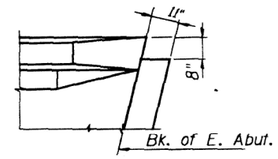

DETAIL - 1
Similar opposite Side

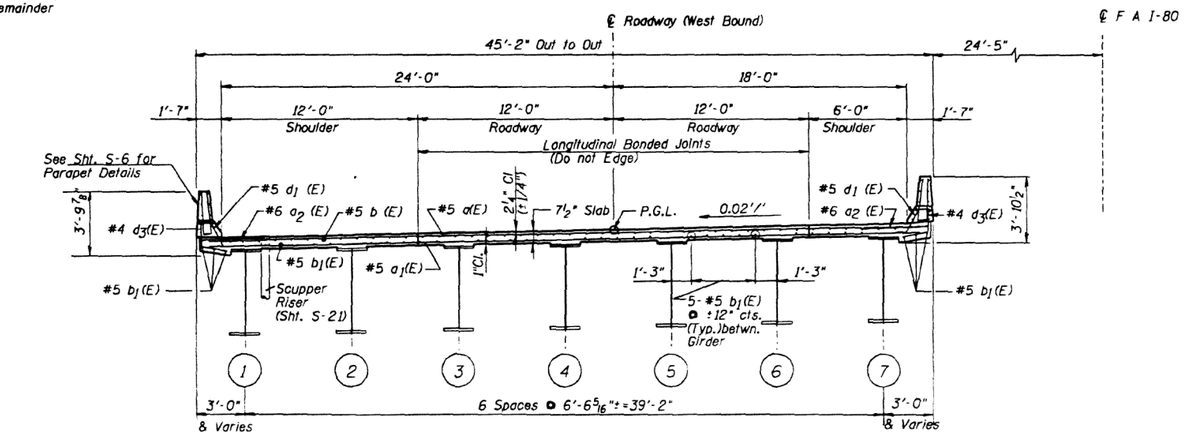

CROSS SECTION

BILL OF MATERIAL

Bar	No.	Size	Length	Shape
d (E)	237	#5	44'-6"	
d_1(E)	165	#5	42'-10"	
d_2(E)	236	#6	4'-0"	
d_3(E)	4	#5	45'-10"	
d_4(E)	16	#5	2'-0"	
b (E)	192	#5	38'-4"	
b_1(E)	180	#5	31'-0"	
d_1(E)	312	#5	2'-7"	
d_3(E)	298	#4	3'-7"	
d_4(E)	12	#5	2'-6"	

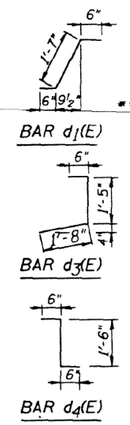

Item	Units	Quantity
Class x Concrete Superstructure	Cu. Yd.	173.4
Reinf. Bars Epoxy Coated	Lbs.	35,100
Bridge Deck Grooving	Sq.Yd	694

Min.bar lap for #5 bars = 1'-8"

** See sheet S-21

Work This Sheet With Sht. S-6, S-7, S-8, S-14, S-15 & S-21

Designed by FLUOR DANIEL
Job No. 636700 Chicago, Illinois 60606
DRAWN : A.K. APPROVED:
DESIGN : J.A.M.P. SCALE : NONE
CHECKED : D.W. DATE : 8-20-97

REVISIONS	
NAME	DATE

DECK PLAN AND CROSS SECTION
WEST BOUND

STATE OF ILLINOIS
DEPARTMENT OF TRANSPORTATION
SECTION 99-2 (K & HB-1-R)
FAI-80 OVER HOUBOLT RD. (FAU-0325)
SN 099-0301 E.B. AND 099-0302 W.B.
PHASE II
WILL COUNTY

MODEL: Drawing Views
FILE NAME: pw://transystems-pw.bentley.com:transyscorp-pw1-hosted/Documents/Projects_2018/CH401/401180022/02-TranSystems/CAD/62R27/Sheets/23-Structural/099-0301 & 099-0302 Existing/0990301EX-62R27-001-Existing Plans 05.dgn

TRANSYSTEMS

USER NAME = amkluver	DESIGNED -	REVISED -	
	CHECKED -	REVISED -	
PLOT SCALE = NTS	DRAWN -	REVISED -	
PLOT DATE = 6/23/2023	CHECKED -	REVISED -	

STATE OF ILLINOIS
DEPARTMENT OF TRANSPORTATION

EXISTING PLANS
STRUCTURE NO. 099-0301 & 099-0302

SHEET SE1-05 OF SE1-48 SHEETS

F.A.I. RTE.	SECTION	COUNTY	TOTAL SHEETS	SHEET NO.
I-80	FAI 80 21 STRUCTURE 6	WILL	898	563
		CONTRACT NO. 62R27		
		ILLINOIS	FED. AID PROJECT	

F.A.U. RTE.	SECTION	COUNTY	TOTAL SHEETS	SHEET NO.
0325	*	WILL	266	155
STA.		TO STA.		
FED. ROAD DIST. NO.	ILLINOIS	FED. AID PROJECT -		

*99-2 (K & HB-1-R)

Sheet No. S-5 of S-26

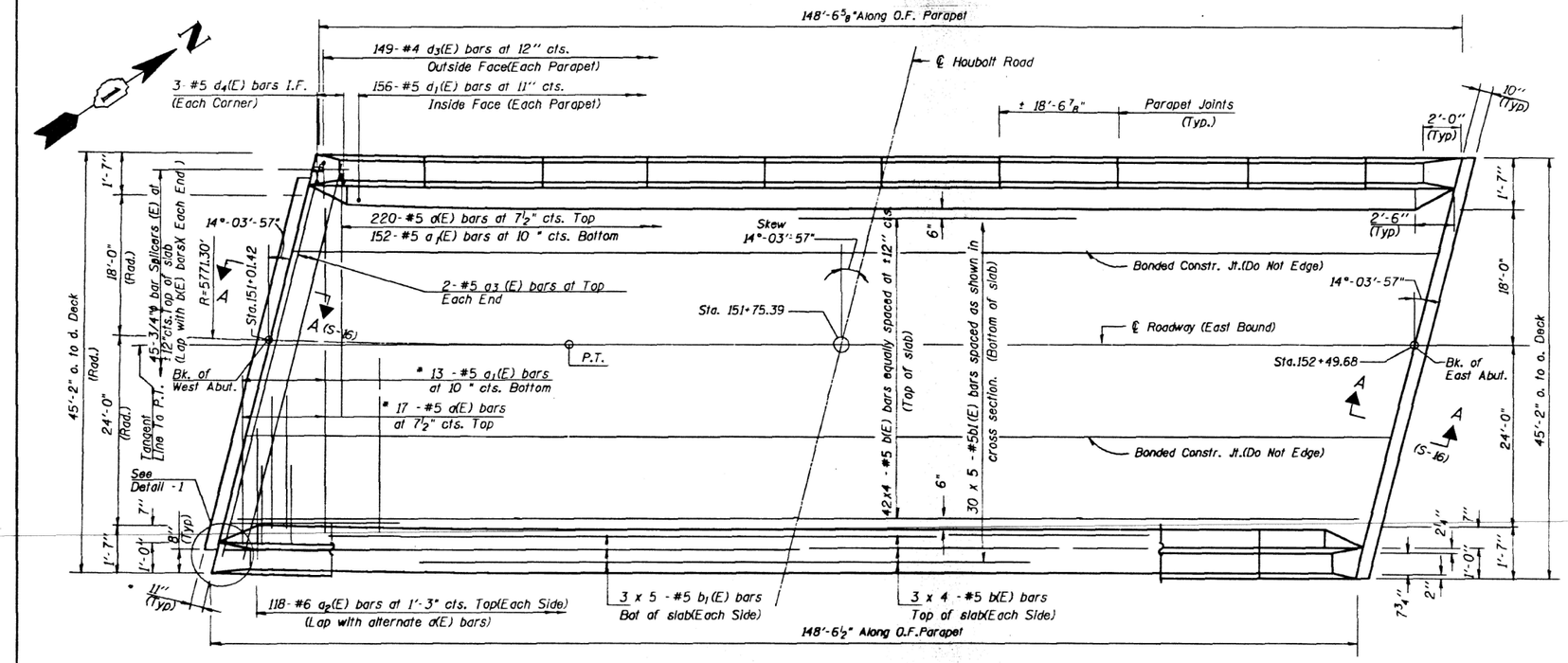

DECK PLAN

* Order a(E) & a1(E) bars full length. Cut to fit skew and use remainder of bars in opposite end.

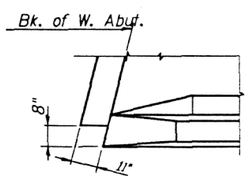

DETAIL - 1
Similar opposite side

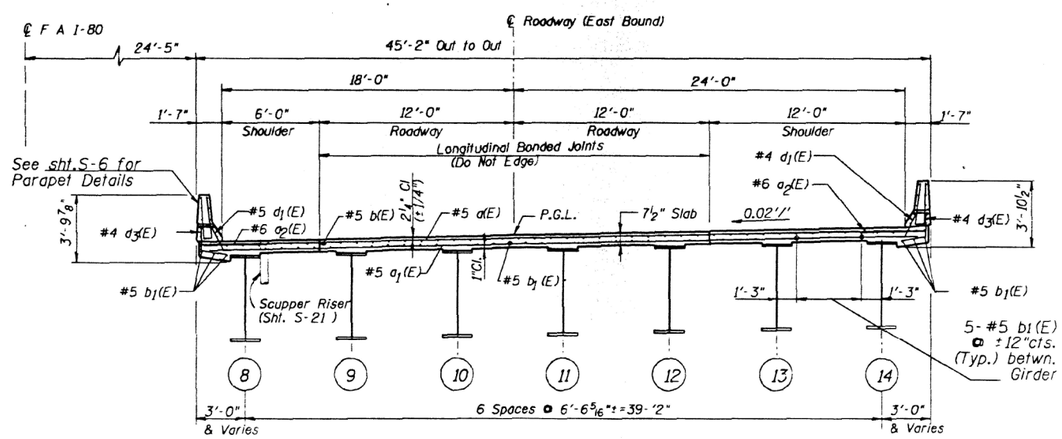

CROSS SECTION

BILL OF MATERIAL

Bar	No.	Size	Length	Shape
a (E)	237	#5	44'-6"	—
a1(E)	165	#5	42'-10"	—
a2(E)	236	#6	4'-0"	—
a3(E)	4	#5	45'-10"	—
** a4(E)	16	#5	2'-0"	—
b (E)	192	#5	38'-4"	—
b1(E)	180	#5	31'-0"	—
d1(E)	312	#5	2'-7"	⌠
d2(E)	298	#4	3'-7"	⌡
d4(E)	12	#5	2'-6"	⌐

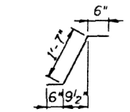

BAR d1(E)

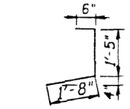

BAR d3(E)

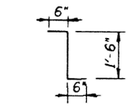

BAR d4(E)

Item	Units	Quantity
Class x Concrete Superstructure	Cu. Yd.	173.4
Reinf. Bars Epoxy Coated	Lbs.	35,100
Bridge Deck Grooving	Sq.Yd	694

Min. bar lap for # 5 bars = 1'-8"
** See Sheet S-21

Work This Sheet With Shl. S-6, S-7, S-9, S-10, S-16, S-17 & S-21

Designed by
FLUOR DANIEL
Job No. 636TOC — Chicago, Illinois 60606
DRAWN : J.L. — APPROVED:
DESIGNED : J.L./Y.F. — SCALE : NONE
CHECKED : D.H. — DATE : 6-29-97

REVISIONS	
NAME	DATE

DECK PLAN AND CROSS SECTION EAST BOUND

STATE OF ILLINOIS
DEPARTMENT OF TRANSPORTATION
SECTION 99-2 (K & HB-1-R)
FAI-80 OVER HOUBOLT RD. (FAU-0325)
SN 099-0301 E.B. AND 099-0302 W.B.
PHASE II
WILL COUNTY

MODEL: Drawing Views
FILE NAME: pw://transystems-pw.bentley.com:transyscorp-pw1-hosted/Documents/Projects_2018/CH401/401180022/02-TranSystems/CAD/62R27/Sheets/23-Structural/099-0301 & 099-0302 Existing/0990301EX-62R27-001-Existing Plans 06.dgn

TRANSYSTEMS

USER NAME = amkluver	DESIGNED -	REVISED -
	CHECKED -	REVISED -
PLOT SCALE = NTS	DRAWN -	REVISED -
PLOT DATE = 6/23/2023	CHECKED -	REVISED -

STATE OF ILLINOIS
DEPARTMENT OF TRANSPORTATION

EXISTING PLANS
STRUCTURE NO. 099-0301 & 099-0302
SHEET SE1-06 OF SE1-48 SHEETS

F.A.I. RTE.	SECTION	COUNTY	TOTAL SHEETS	SHEET NO.
I-80	FAI 80 21 STRUCTURE 6	WILL	898	564
		CONTRACT NO. 62R27		
		ILLINOIS	FED. AID PROJECT	

F.A.U. RTE.	SECTION	COUNTY	TOTAL SHEETS	SHEET NO.
0325	*	WILL	286	160
STA.		TO STA.		
FED. ROAD DIST. NO.	ILLINOIS	FED. AID PROJECT		

*99-2 (K & HB-1-R)

Sheet S-6 of S-26

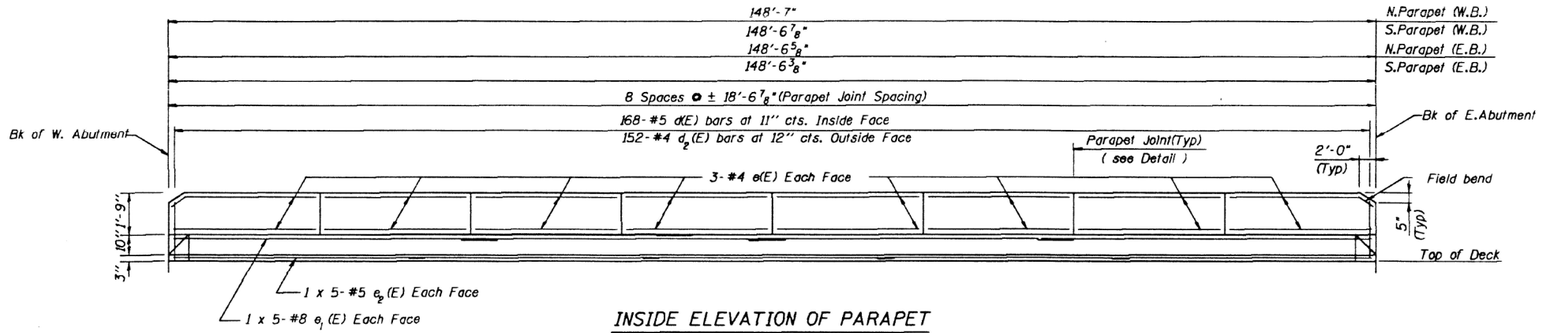

INSIDE ELEVATION OF PARAPET
WEST AND EAST BOUND
North Parapet Shown, South Parapet Similar

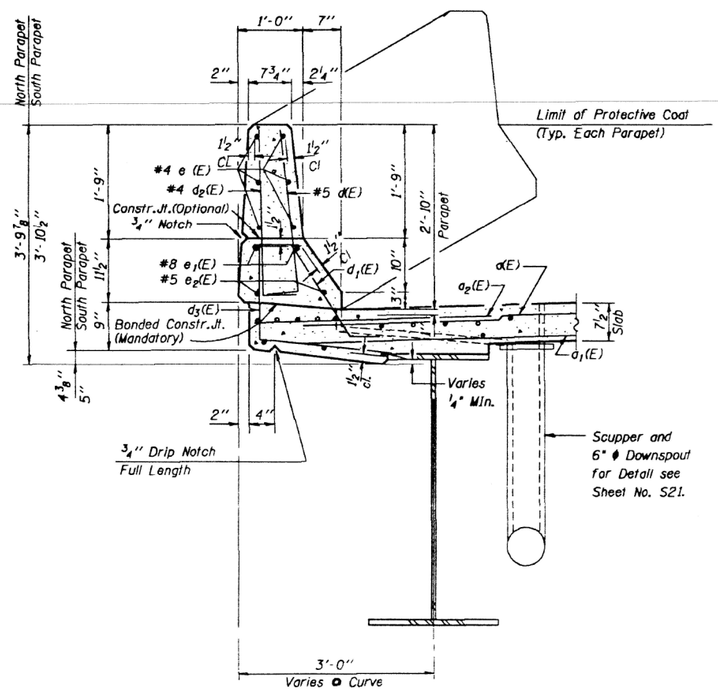

SECTION THRU PARAPET

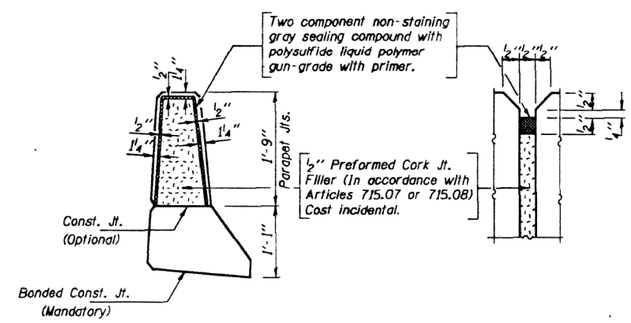

PARAPET JOINT DETAILS

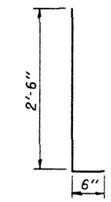

BARS d(E) & d2(E)

BILL OF MATERIAL
WESTBOUND

Bar	No.	Size	Length	Shape
d(E)	336	#5	3'-0"	
d2(E)	304	#4	3'-0"	
e(E)	96	#4	18'-3"	
e1(E)	16	#8	40'-9"	
e2(E)	20	#5	31'-5"	
Reinforcement Bars (Epoxy Coated)			Lbs.	5220
Class X Concrete Superstructure			Cu. Yds.	32.0
Protective Coat			Sq.Yd	121

EASTBOUND

Bar	No.	Size	Length	Shape
d(E)	336	#5	3'-0"	
d2(E)	304	#4	3'-0"	
e(E)	96	#4	18'-3"	
e1(E)	16	#8	40'-6"	
e2(E)	20	#5	31'-5"	
Reinforcement Bars (Epoxy Coated)			Lbs.	5220
Class X Concrete Superstructure			Cu. Yds.	32.0
Protective Coat			Sq.Yd	121

Reinforcement bars designated (E) shall be epoxy coated.
Bars indicated thus A x B-#5 etc. indicates A line of bars with B lengths per line.
Minimum bar lap for e1(E) bars shall be 4'-6"
Minimum bar lap for e2(E) bars shall be 2'-2"

Work This Sheet With Sht. S-4 & S-5.

Designed by
FLUOR DANIEL
Job No. 63470C Chicago, Illinois 60606
DRAWN : B.K. APPROVED:
DESIGNED : J.C. SCALE : NONE
CHECKED : D.W DATE : 6-24-92

PARAPET ELEVATION AND DETAILS

STATE OF ILLINOIS
DEPARTMENT OF TRANSPORTATION
SECTION 99-2 (K & HB-1-R)
FAI-80 OVER HOUBOLT RD. (FAU-0325)
SN 099-0301 E.B. AND 099-0302 W.B.
PHASE II
WILL COUNTY

MODEL: Drawing Views
FILE NAME: pw://transystems-pw.bentley.com:transyscorp-pw1-hosted/Documents/Projects_2018/CH401/401180022/02-TranSystems/CAD/62R27/Sheets/23-Structural/099-0301 & 099-0302 Existing/0990301EX-62R27-001-Existing Plans 07.dgn

TRANSYSTEMS	USER NAME = amkluver	DESIGNED -	REVISED -	STATE OF ILLINOIS DEPARTMENT OF TRANSPORTATION	EXISTING PLANS STRUCTURE NO. 099-0301 & 099-0302	F.A.I. RTE.	SECTION	COUNTY	TOTAL SHEETS	SHEET NO.
		CHECKED -	REVISED -			I-80	FAI 80 21 STRUCTURE 6	WILL	898	565
	PLOT SCALE = NTS	DRAWN -	REVISED -			CONTRACT NO. 62R27				
	PLOT DATE = 6/23/2023	CHECKED -	REVISED -		SHEET SE1-07 OF SE1-48 SHEETS	ILLINOIS	FED. AID PROJECT			

F.A.I. RTE.	SECTION	COUNTY	TOTAL SHEETS	SHEET NO.
0325	*	WILL	286	161
STA.		TO STA.		
FED. ROAD DIST. NO.	ILLINOIS	FED. AID PROJECT -		

*99-2 (K & HB-1-R)

Sheet S-7 Of S-26

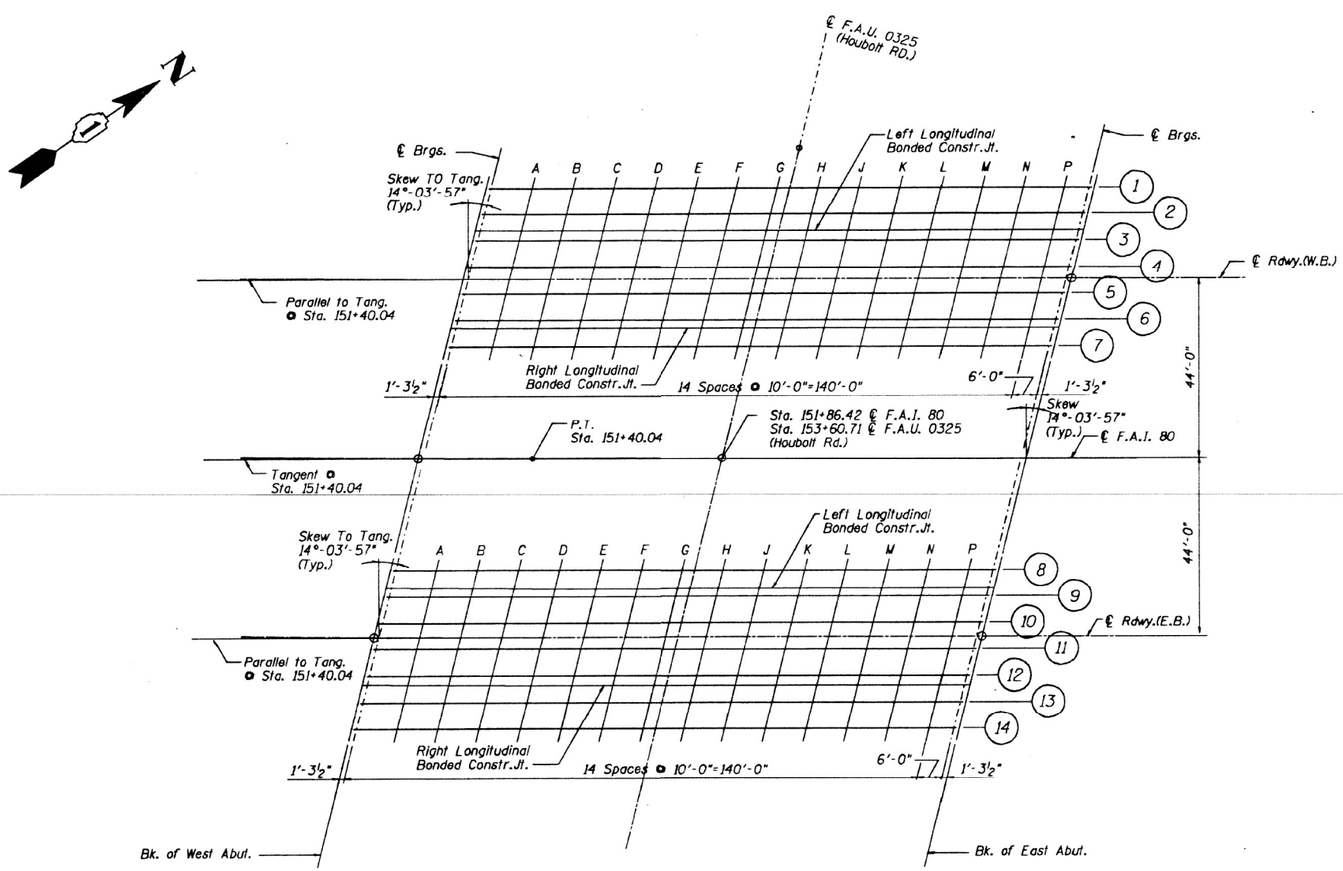

PLAN

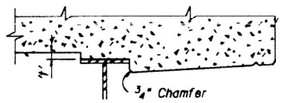

AT MINIMUM FILLET

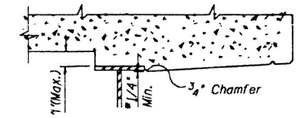

AT MAXIMUM FILLET

METHOD OF DETERMINING FILLET HEIGHTS "I"

After all structural steel has been erected, elevations of the top flanges of the beams shall be taken at the stations shown on Elevation sheets. These elevations subtracted from the "Theoretical Grade Elevations Adjusted for Dead Load Deflection" shown on this Sheet minus slab thickness, equals the fillet heights "I" above top flanges of beams.

NOTE: For Top of Deck Elevation Tables, see Sheet S-8, S-9, & S-10.

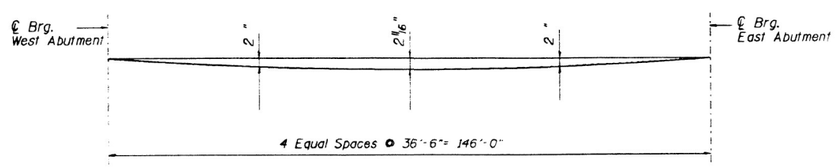

DEAD LOAD DEFLECTION DIAGRAM

(Includes weight of concrete slab only)

Designed by
FLUOR DANIEL
Job No. 834700 Chicago, Illinois 60606
DRAWN : A.S. APPROVED:
DESIGN : A.S. SCALE : NONE
CHECKED : D.R. DATE : 6-25-97

REVISIONS	
NAME	DATE

DECK ELEVATION DETAILS

STATE OF ILLINOIS
DEPARTMENT OF TRANSPORTATION
SECTION 99-2 (K & HB-1-R)
FAI-80 OVER HOUBOLT RD. (FAU-0325)
SN 099-0301 E.B. AND 099-0302 W.B.
PHASE II
WILL COUNTY

MODEL: Drawing Views
FILE NAME: pw://transystems-pw.bentley.com:transyscorp-pw1-hosted/Documents/Projects_2018/CH401/401180022/02-TranSystems/CAD/62R27/Sheets/23-Structural/099-0301 & 099-0302 Existing/0990301EX-62R27-001-Existing Plans 08.dgn

TRANSYSTEMS

USER NAME = amkluver	DESIGNED -	REVISED -	
	CHECKED -	REVISED -	
PLOT SCALE = NTS	DRAWN -	REVISED -	
PLOT DATE = 6/23/2023	CHECKED -	REVISED -	

STATE OF ILLINOIS
DEPARTMENT OF TRANSPORTATION

EXISTING PLANS
STRUCTURE NO. 099-0301 & 099-0302

SHEET SE1-08 OF SE1-48 SHEETS

F.A.I. RTE.	SECTION	COUNTY	TOTAL SHEETS	SHEET NO.
I-80	FAI 80 21 STRUCTURE 6	WILL	898	566
		CONTRACT NO. 62R27		
		ILLINOIS	FED. AID PROJECT	

*99-2 (K & HB-1-R)

FAU RTE.	SECTION	COUNTY	TOTAL SHEETS	SHEET NO.
0325	*	WILL	286	162
STA.		TO STA.		
FED. ROAD DIST. NO.	ILLINOIS	FED. AID PROJECT		

SHEET S-8 OF S-26

LT.CURB LINE(W.B.)

LOCATION	STATION	OFFSET	THEORET. GRADE ELEVATION	THEORET.GRADE EL. ADJ. FOR D.L. DEFLECTION
BK.WEST ABUT.	15129.025	-68.000	605.140	605.140
℄.BRG.W.ABUT.	15130.329	-68.000	605.146	605.146
A	15140.449	-68.000	605.194	605.250
B	15150.449	-68.000	605.237	605.342
C	15160.449	-68.000	605.278	605.423
D	15170.449	-68.000	605.315	605.492
E	15180.449	-68.000	605.349	605.549
F	15190.449	-68.000	605.380	605.596
G	15200.449	-68.000	605.408	605.630
H	15210.449	-68.000	605.433	605.653
I	15220.449	-68.000	605.455	605.665
J	15230.449	-68.000	605.474	605.665
K	15240.449	-68.000	605.489	605.654
L	15250.449	-68.000	605.501	605.631
M	15260.449	-68.000	605.511	605.597
N	15270.449	-68.000	605.517	605.552
℄.BRG.E.ABUT.	15276.449	-68.000	605.519	605.519
BK.EAST ABUT.	15277.744	-68.000	605.519	605.519

BEAM NO.1

LOCATION	STATION	OFFSET	THEORET. GRADE ELEVATION	THEORET.GRADE EL. ADJ. FOR D.L. DEFLECTION
BK.WEST ABUT.	15128.681	-66.572	605.167	605.167
℄.BRG.W.ABUT.	15129.985	-66.575	605.173	605.173
A	15140.094	-66.583	605.220	605.277
B	15150.094	-66.583	605.264	605.369
C	15160.094	-66.583	605.304	605.449
D	15170.094	-66.583	605.342	605.519
E	15180.094	-66.583	605.376	605.576
F	15190.094	-66.583	605.407	605.623
G	15200.094	-66.583	605.435	605.657
H	15210.094	-66.583	605.460	605.681
I	15220.094	-66.583	605.482	605.692
J	15230.094	-66.583	605.501	605.693
K	15240.094	-66.583	605.517	605.682
L	15250.094	-66.583	605.529	605.659
M	15260.094	-66.583	605.538	605.625
N	15270.094	-66.583	605.545	605.580
℄.BRG.E.ABUT.	15276.094	-66.583	605.547	605.547
BK.EAST ABUT.	15277.389	-66.583	605.547	605.547

BEAM NO. 2

LOCATION	STATION	OFFSET	THEORET. GRADE ELEVATION	THEORET.GRADE EL. ADJ. FOR D.L. DEFLECTION
BK.WEST ABUT.	15127.041	-60.041	605.289	605.289
℄.BRG.W.ABUT.	15128.343	-60.044	605.296	605.296
A	15138.449	-60.055	605.343	605.400
B	15148.459	-60.056	605.388	605.493
C	15158.459	-60.056	605.429	605.574
D	15168.459	-60.056	605.467	605.644
E	15178.459	-60.056	605.502	605.702
F	15188.459	-60.056	605.533	605.749
G	15198.459	-60.056	605.562	605.784
H	15208.459	-60.056	605.587	605.808
I	15218.459	-60.056	605.610	605.820
J	15228.459	-60.056	605.629	605.821
K	15238.459	-60.056	605.645	605.810
L	15248.459	-60.056	605.658	605.788
M	15258.459	-60.056	605.668	605.755
N	15268.459	-60.056	605.675	605.710
℄.BRG.E.ABUT.	15274.459	-60.056	605.677	605.677
BK.EAST ABUT.	15275.754	-60.056	605.678	605.678

LEFT LONGITUDINAL JOINT (W.B.)

LOCATION	STATION	OFFSET	THEORET. GRADE ELEVATION	THEORET.GRADE EL. ADJ. FOR D.L. DEFLECTION
BK.WEST ABUT.	15126.014	-56.000	605.365	605.365
℄.BRG.W.ABUT.	15127.315	-56.000	605.371	605.371
A	15137.413	-56.000	605.420	605.475
B	15147.443	-56.000	605.464	605.569
C	15157.443	-56.000	605.506	605.650
D	15167.443	-56.000	605.544	605.721
E	15177.443	-56.000	605.579	605.780
F	15187.443	-56.000	605.611	605.828
G	15197.443	-56.000	605.640	605.864
H	15207.443	-56.000	605.666	605.888
I	15217.443	-56.000	605.689	605.900
J	15227.443	-56.000	605.708	605.901
K	15237.443	-56.000	605.725	605.890
L	15247.443	-56.000	605.738	605.867
M	15257.443	-56.000	605.748	605.834
N	15267.443	-56.000	605.755	605.790
℄.BRG.E.ABUT.	15273.443	-56.000	605.758	605.758
BK.EAST ABUT.	15274.737	-56.000	605.758	605.758

BEAM NO.3

LOCATION	STATION	OFFSET	THEORET. GRADE ELEVATION	THEORET.GRADE EL. ADJ. FOR D.L. DEFLECTION
BK.WEST ABUT.	15125.405	-53.509	605.411	605.411
℄.BRG.W.ABUT.	15126.706	-53.512	605.418	605.418
A	15136.800	-53.527	605.466	605.523
B	15146.823	-53.528	605.511	605.616
C	15156.823	-53.528	605.552	605.697
D	15166.823	-53.528	605.591	605.768
E	15176.823	-53.528	605.626	605.826
F	15186.823	-53.528	605.658	605.874
G	15196.823	-53.528	605.688	605.909
H	15206.823	-53.528	605.714	605.934
I	15216.823	-53.528	605.736	605.947
J	15226.823	-53.528	605.756	605.948
K	15236.823	-53.528	605.773	605.938
L	15246.823	-53.528	605.786	605.916
M	15256.823	-53.528	605.797	605.883
N	15266.823	-53.528	605.804	605.839
℄.BRG.E.ABUT.	15272.823	-53.528	605.807	605.807
BK.EAST ABUT.	15274.118	-53.528	605.807	605.807

BEAM NO.4

LOCATION	STATION	OFFSET	THEORET. GRADE ELEVATION	THEORET.GRADE EL. ADJ. FOR D.L. DEFLECTION
BK.WEST ABUT.	15123.773	-46.977	605.534	605.534
℄.BRG.W.ABUT.	15125.072	-46.981	605.541	605.541
A	15135.155	-46.998	605.589	605.646
B	15145.223	-46.998	605.635	605.740
C	15155.188	-47.000	605.677	605.822
D	15165.188	-47.000	605.716	605.893
E	15175.188	-47.000	605.752	605.952
F	15185.188	-47.000	605.784	606.000
G	15195.188	-47.000	605.814	606.036
H	15205.188	-47.000	605.840	606.061
I	15215.188	-47.000	605.864	606.074
J	15225.188	-47.000	605.884	606.076
K	15235.188	-47.000	605.901	606.066
L	15245.188	-47.000	605.915	606.045
M	15255.188	-47.000	605.926	606.013
N	15265.188	-47.000	605.934	605.969
℄.BRG.E.ABUT.	15271.188	-47.000	605.937	605.937
BK.EAST ABUT.	15272.483	-47.000	605.938	605.938

P.G.L.(W.B.)

LOCATION	STATION	OFFSET	THEORET. GRADE ELEVATION	THEORET.GRADE EL. ADJ. FOR D.L. DEFLECTION
BK.WEST ABUT.	15123.016	-44.000	605.590	605.590
℄.BRG.W.ABUT.	15124.314	-44.000	605.597	605.597
A	15134.391	-44.000	605.646	605.702
B	15144.436	-44.000	605.691	605.797
C	15154.436	-44.000	605.734	605.879
D	15164.436	-44.000	605.773	605.950
E	15174.436	-44.000	605.809	606.009
F	15184.436	-44.000	605.842	606.057
G	15194.436	-44.000	605.872	606.094
H	15204.436	-44.000	605.899	606.119
I	15214.436	-44.000	605.922	606.133
J	15224.436	-44.000	605.943	606.135
K	15234.436	-44.000	605.960	606.125
L	15244.436	-44.000	605.974	606.105
M	15254.436	-44.000	605.986	606.072
N	15264.436	-44.000	605.994	606.029
℄.BRG.E.ABUT.	15270.436	-44.000	605.997	605.997
BK.EAST ABUT.	15271.731	-44.000	605.997	605.997

BEAM NO. 5

LOCATION	STATION	OFFSET	THEORET. GRADE ELEVATION	THEORET.GRADE EL. ADJ. FOR D.L. DEFLECTION
BK.WEST ABUT.	15122.145	-40.444	605.657	605.657
℄.BRG.W.ABUT.	15123.442	-40.448	605.664	605.664
A	15133.513	-40.468	605.713	605.769
B	15143.552	-40.472	605.758	605.863
C	15153.552	-40.472	605.801	605.946
D	15163.552	-40.472	605.841	606.017
E	15173.552	-40.472	605.877	606.077
F	15183.552	-40.472	605.910	606.125
G	15193.552	-40.472	605.940	606.162
H	15203.552	-40.472	605.967	606.188
I	15213.552	-40.472	605.991	606.201
J	15223.552	-40.472	606.012	606.204
K	15233.552	-40.472	606.030	606.195
L	15243.552	-40.472	606.044	606.174
M	15253.552	-40.472	606.056	606.142
N	15263.552	-40.472	606.064	606.099
℄.BRG.E.ABUT.	15269.552	-40.472	606.067	606.067
BK.EAST ABUT.	15270.847	-40.472	606.068	606.068

BEAM NO.6

LOCATION	STATION	OFFSET	THEORET. GRADE ELEVATION	THEORET.GRADE EL. ADJ. FOR D.L. DEFLECTION
BK.WEST ABUT.	15120.520	-33.911	605.779	605.779
℄.BRG.W.ABUT.	15121.816	-33.916	605.785	605.785
A	15131.876	-33.939	605.835	605.891
B	15141.917	-33.944	605.881	605.986
C	15151.917	-33.944	605.924	606.069
D	15161.917	-33.944	605.964	606.141
E	15171.917	-33.944	606.001	606.201
F	15181.917	-33.944	606.035	606.250
G	15191.917	-33.944	606.066	606.287
H	15201.917	-33.944	606.093	606.313
I	15211.917	-33.944	606.118	606.328
J	15221.917	-33.944	606.139	606.331
K	15231.917	-33.944	606.157	606.322
L	15241.917	-33.944	606.172	606.302
M	15251.917	-33.944	606.184	606.271
N	15261.917	-33.944	606.193	606.228
℄.BRG.E.ABUT.	15267.917	-33.944	606.196	606.196
BK.EAST ABUT.	15269.211	-33.944	606.197	606.197

Note: For Deck Elevation Details, See Sheet No. S-7.

Designed by
FLUOR DANIEL
Job No. 8.9.7.0C Chicago, Illinois 60606
DRAWN - DESIGN 2 - CHECKED - APPROVED - SCALE - DATE - 6-25-97

REVISIONS	
NAME	DATE

DECK ELEVATIONS
WEST BOUND

STATE OF ILLINOIS
DEPARTMENT OF TRANSPORTATION
SECTION 99-21K & HB-1-R;
FAI-80 OVER HOUBOLT RD. (FAU-0325)
SN 099-0301 E.B. & 099-0302 W.B.
PHASE II
WILL COUNTY

MODEL: Drawing Views
FILE NAME: pw://transystems-pw.bentley.com:transyscorp-pw1-hosted/Documents/Projects_2018/CH401/401180022/02-TranSystems/CAD/62R27/Sheets/23-Structural/099-0301 & 099-0302 Existing/0990301EX-62R27-001-Existing Plans 09.dgn

TRANSYSTEMS

USER NAME = amkluver	DESIGNED -	REVISED -	
	CHECKED -	REVISED -	
PLOT SCALE = NTS	DRAWN -	REVISED -	
PLOT DATE = 6/23/2023	CHECKED -	REVISED -	

STATE OF ILLINOIS
DEPARTMENT OF TRANSPORTATION

EXISTING PLANS
STRUCTURE NO. 099-0301 & 099-0302
SHEET SE1-09 OF SE1-48 SHEETS

F.A.I. RTE.	SECTION	COUNTY	TOTAL SHEETS	SHEET NO.
I-80	FAI 80 21 STRUCTURE 6	WILL	898	567
		CONTRACT NO. 62R27		
		ILLINOIS	FED. AID PROJECT	

*99-2 (K & HB-1-R)

FAI RTE.	SECTION	COUNTY	TOTAL SHEETS	SHEET NO.
0325	*	WILL	286	163
STA.		TO STA.		
FED. ROAD DIST. NO.	ILLINOIS	FED. AID PROJECT		

Sheet S-9 of S-26

RIGHT LONGITUDINAL JOINT (W.B)

LOCATION	STATION	OFFSET	THEORET. GRADE ELEVATION	THEORET.GRADE EL. ADJ. FOR D.L. DEFLECTION
BK.WEST ABUT.	15120.031	-32.000	605.815	605.815
℄.BRG.W.ABUT.	15121.325	-32.000	605.821	605.821
A	15131.382	-32.000	605.871	605.927
B	15141.430	-32.000	605.918	606.022
C	15151.430	-32.000	605.961	606.106
D	15161.430	-32.000	606.001	606.178
E	15171.430	-32.000	606.038	606.239
F	15181.430	-32.000	606.072	606.289
G	15191.430	-32.000	606.103	606.327
H	15201.430	-32.000	606.131	606.353
I	15211.430	-32.000	606.155	606.367
J	15221.430	-32.000	606.177	606.369
K	15231.430	-32.000	606.195	606.360
L	15241.430	-32.000	606.210	606.340
M	15251.430	-32.000	606.222	606.308
N	15261.430	-32.000	606.231	606.266
℄.BRG.E.ABUT.	15267.430	-32.000	606.235	606.235
BK.EAST ABUT.	15268.724	-32.000	606.236	606.236

BEAM NO.7

LOCATION	STATION	OFFSET	THEORET. GRADE ELEVATION	THEORET.GRADE EL. ADJ. FOR D.L. DEFLECTION
BK.WEST ABUT.	15118.899	-27.378	605.900	605.900
℄.BRG.W.ABUT.	15120.194	-27.382	605.907	605.907
A	15130.242	-27.408	605.958	606.014
B	15140.281	-27.417	606.005	606.110
C	15150.281	-27.417	606.048	606.194
D	15160.281	-27.417	606.089	606.266
E	15170.281	-27.417	606.126	606.327
F	15180.281	-27.417	606.161	606.376
G	15190.281	-27.417	606.192	606.414
H	15200.281	-27.417	606.220	606.440
I	15210.281	-27.417	606.245	606.455
J	15220.281	-27.417	606.267	606.458
K	15230.281	-27.417	606.285	606.450
L	15240.281	-27.417	606.301	606.431
M	15250.281	-27.417	606.313	606.400
N	15260.281	-27.417	606.322	606.357
℄.BRG.E.ABUT.	15266.281	-27.417	606.327	606.327
BK.EAST ABUT.	15267.576	-27.417	606.327	606.327

RT.CURB LINE (W.B.)

LOCATION	STATION	OFFSET	THEORET. GRADE ELEVATION	THEORET.GRADE EL. ADJ. FOR D.L. DEFLECTION
BK.WEST ABUT.	15118.543	-26.000	605.613	605.613
℄.BRG.W.ABUT.	15119.836	-26.000	605.619	605.619
A	15129.882	-26.000	605.670	605.726
B	15139.927	-26.000	605.717	605.822
C	15149.926	-26.000	605.869	606.014
D	15159.926	-26.000	605.910	606.086
E	15169.926	-26.000	605.947	606.147
F	15179.926	-26.000	605.981	606.197
G	15189.926	-26.000	606.013	606.235
H	15199.926	-26.000	606.041	606.261
I	15209.926	-26.000	606.066	606.276
J	15219.926	-26.000	606.088	606.280
K	15229.926	-26.000	606.107	606.272
L	15239.926	-26.000	606.122	606.252
M	15249.926	-26.000	606.135	606.221
N	15259.926	-26.000	606.144	606.179
℄.BRG.E.ABUT.	15265.926	-26.000	606.148	606.148
BK.EAST ABUT.	15267.221	-26.000	606.149	606.149

LT.CURB LINE(E.B.)

LOCATION	STATION	OFFSET	THEORET. GRADE ELEVATION	THEORET.GRADE EL. ADJ. FOR D.L. DEFLECTION
BK.WEST ABUT.	15105.783	26.000	605.138	605.138
℄.BRG.W.ABUT.	15107.064	26.000	605.145	605.145
A	15117.019	26.000	605.199	605.256
B	15126.973	26.000	605.250	605.355
C	15136.928	26.000	605.297	605.442
D	15146.898	26.000	605.342	605.519
E	15156.898	26.000	605.384	605.584
F	15166.898	26.000	605.422	605.637
G	15176.898	26.000	605.457	605.679
H	15186.898	26.000	605.490	605.710
I	15196.898	26.000	605.519	605.729
J	15206.898	26.000	605.545	605.736
K	15216.898	26.000	605.568	605.733
L	15226.898	26.000	605.587	605.717
M	15236.898	26.000	605.604	605.691
N	15246.898	26.000	605.617	605.652
℄.BRG.E.ABUT.	15252.898	26.000	605.624	605.624
BK.EAST ABUT.	15254.192	26.000	605.625	605.625

BEAM NO.8

LOCATION	STATION	OFFSET	THEORET. GRADE ELEVATION	THEORET.GRADE EL. ADJ. FOR D.L. DEFLECTION
BK.WEST ABUT.	15105.428	27.522	605.166	605.166
℄.BRG.W.ABUT.	15106.710	27.514	605.173	605.173
A	15116.662	27.465	605.226	605.283
B	15126.614	27.432	605.276	605.381
C	15136.567	27.418	605.324	605.469
D	15146.543	27.417	605.368	605.545
E	15156.543	27.417	605.410	605.610
F	15166.543	27.417	605.449	605.664
G	15176.543	27.417	605.484	605.706
H	15186.543	27.417	605.516	605.737
I	15196.543	27.417	605.546	605.756
J	15206.543	27.417	605.572	605.764
K	15216.543	27.417	605.595	605.760
L	15226.543	27.417	605.615	605.745
M	15236.543	27.417	605.631	605.718
N	15246.543	27.417	605.645	605.680
℄.BRG.E.ABUT.	15252.543	27.417	605.651	605.651
BK.EAST ABUT.	15253.837	27.417	605.653	605.653

LEFT LONGITUDINAL JOINT (E.W.)

LOCATION	STATION	OFFSET	THEORET. GRADE ELEVATION	THEORET.GRADE EL. ADJ. FOR D.L. DEFLECTION
BK.WEST ABUT.	15104.326	32.000	605.250	605.250
℄.BRG.W.ABUT.	15105.605	32.000	605.257	605.257
A	15115.550	32.000	605.311	605.367
B	15125.494	32.000	605.362	605.467
C	15135.439	32.000	605.410	605.555
D	15145.394	32.000	605.455	605.633
E	15155.394	32.000	605.498	605.699
F	15165.394	32.000	605.536	605.753
G	15175.394	32.000	605.572	605.796
H	15185.394	32.000	605.605	605.827
I	15195.394	32.000	605.635	605.846
J	15205.394	32.000	605.661	605.853
K	15215.394	32.000	605.684	605.849
L	15225.394	32.000	605.704	605.834
M	15235.394	32.000	605.722	605.807
N	15245.394	32.000	605.735	605.770
℄.BRG.E.ABUT.	15251.394	32.000	605.742	605.742
BK.EAST ABUT.	15252.689	32.000	605.744	605.744

BEAM NO.9

LOCATION	STATION	OFFSET	THEORET. GRADE ELEVATION	THEORET.GRADE EL. ADJ. FOR D.L. DEFLECTION
BK.WEST ABUT.	15103.841	34.060	605.289	605.289
℄.BRG.W.ABUT.	15105.122	34.052	605.296	605.296
A	15115.063	33.999	605.349	605.406
B	15125.004	33.964	605.400	605.505
C	15134.945	33.947	605.447	605.592
D	15144.907	33.944	605.492	605.669
E	15154.907	33.944	605.535	605.735
F	15164.907	33.944	605.574	605.789
G	15174.907	33.944	605.610	605.832
H	15184.907	33.944	605.643	605.863
I	15194.907	33.944	605.672	605.882
J	15204.907	33.944	605.699	605.891
K	15214.907	33.944	605.722	605.887
L	15224.907	33.944	605.743	605.873
M	15234.907	33.944	605.760	605.847
N	15244.907	33.944	605.774	605.809
℄.BRG.E.ABUT.	15250.907	33.944	605.781	605.781
BK.EAST ABUT.	15252.202	33.944	605.782	605.782

BEAM NO 10

LOCATION	STATION	OFFSET	THEORET. GRADE ELEVATION	THEORET.GRADE EL. ADJ. FOR D.L. DEFLECTION
BK.WEST ABUT.	15102.258	40.598	605.411	605.411
℄.BRG.W.ABUT.	15103.537	40.589	605.418	605.418
A	15113.467	40.534	605.472	605.528
B	15123.397	40.497	605.522	605.628
C	15133.326	40.476	605.571	605.716
D	15143.272	40.472	605.616	605.793
E	15153.272	40.472	605.659	605.859
F	15163.272	40.472	605.699	605.914
G	15173.272	40.472	605.735	605.957
H	15183.272	40.472	605.768	605.989
I	15193.272	40.472	605.799	606.009
J	15203.272	40.472	605.826	606.018
K	15213.272	40.472	605.850	606.015
L	15223.272	40.472	605.871	606.001
M	15233.272	40.472	605.888	605.975
N	15243.272	40.472	605.903	605.938
℄.BRG.E.ABUT.	15249.272	40.472	605.910	605.910
BK.EAST ABUT.	15250.566	40.472	605.912	605.912

P.G.L(E.B.)

LOCATION	STATION	OFFSET	THEORET. GRADE ELEVATION	THEORET.GRADE EL. ADJ. FOR D.L. DEFLECTION
BK.WEST ABUT.	15101.421	44.000	605.473	605.473
℄.BRG.W.ABUT.	15102.698	44.000	605.481	605.481
A	15112.622	44.000	605.536	605.593
B	15122.545	44.000	605.588	605.693
C	15132.469	44.000	605.636	605.782
D	15142.388	44.000	605.682	605.859
E	15152.388	44.000	605.725	605.925
F	15162.388	44.000	605.765	605.980
G	15172.388	44.000	605.802	606.024
H	15182.388	44.000	605.835	606.056
I	15192.388	44.000	605.866	606.076
J	15202.388	44.000	605.893	606.085
K	15212.388	44.000	605.918	606.083
L	15222.388	44.000	605.939	606.069
M	15232.388	44.000	605.957	606.044
N	15242.388	44.000	605.972	606.007
℄.BRG.E.ABUT.	15248.388	44.000	605.979	605.979
BK.EAST ABUT.	15249.683	44.000	605.981	605.981

Note: For Deck Elevation Details, See Sheet No. S-7.

REVISIONS	
NAME	DATE

DECK ELEVATIONS
EAST AND WEST BOUND

STATE OF ILLINOIS
DEPARTMENT OF TRANSPORTATION
SECTION 99-2 (K & HB-1-R)
FAI-80 OVER HOUBOLT RD. (FAU-0325)
SN 099-0301 E.B. AND 099-0302 W.B.
PHASE II
WILL COUNTY

Designed by
FLUOR DANIEL
JOB NO. 836700 Chicago, Illinois 60606
DRAWN: JC APPROVED:
SEQUENCE: JC SCALE: -
CHECKED: DW DATE: 6-25-97

FAU RTE.	SECTION	COUNTY	TOTAL SHEETS	SHEET NO.
0325	*	WILL	286	164
STA.		TO STA.		
FED. ROAD DIST. NO.	ILLINOIS	FED. AID PROJECT		

*99-2 (K & HB-1-R)

SHEET S-10 OF S-26

BEAM NO.11

LOCATION	STATION	OFFSET	THEORET. GRADE ELEVATION	THEORET.GRADE EL. ADJ. FOR D.L. DEFLECTION
BK.WEST ABUT.	15100.679	47.136	605.532	605.532
℄.BRG.W.ABUT.	15101.957	47.128	605.539	605.539
A	15111.875	47.070	605.593	605.650
B	15121.793	47.029	605.644	605.749
C	15131.712	47.006	605.693	605.838
D	15141.636	47.000	605.739	605.916
E	15151.636	47.000	605.782	605.982
F	15161.636	47.000	605.822	606.037
G	15171.636	47.000	605.859	606.081
H	15181.636	47.000	605.893	606.113
I	15191.636	47.000	605.924	606.134
J	15201.636	47.000	605.951	606.143
K	15211.636	47.000	605.976	606.141
L	15221.636	47.000	605.997	606.127
M	15231.636	47.000	606.016	606.102
N	15241.636	47.000	606.031	606.066
℄.BRG.E.ABUT.	15247.636	47.000	606.038	606.038
BK.EAST ABUT.	15248.931	47.000	606.040	606.040

BEAM NO.12

LOCATION	STATION	OFFSET	THEORET. GRADE ELEVATION	THEORET.GRADE EL. ADJ. FOR D.L. DEFLECTION
BK.WEST ABUT.	15099.103	53.675	605.654	605.654
℄.BRG.W.ABUT.	15100.379	53.666	605.661	605.661
A	15110.286	53.606	605.716	605.772
B	15120.194	53.562	605.767	605.872
C	15130.101	53.536	605.816	605.961
D	15140.008	53.528	605.862	606.039
E	15150.001	53.528	605.906	606.106
F	15160.001	53.528	605.947	606.162
G	15170.001	53.528	605.984	606.206
H	15180.001	53.528	606.019	606.239
I	15190.001	53.528	606.050	606.260
J	15200.001	53.528	606.078	606.270
K	15210.001	53.528	606.103	606.268
L	15220.001	53.528	606.125	606.255
M	15230.001	53.528	606.144	606.230
N	15240.001	53.528	606.159	606.194
℄.BRG.E.ABUT.	15246.001	53.528	606.167	606.167
BK.EAST ABUT.	15247.295	53.528	606.169	606.169

RIGHT LONGITUDINAL JOINT (E.W.)

LOCATION	STATION	OFFSET	THEORET. GRADE ELEVATION	THEORET.GRADE EL. ADJ. FOR D.L. DEFLECTION
BK.WEST ABUT.	15098.529	56.000	605.697	605.697
℄.BRG.W.ABUT.	15099.803	56.000	605.704	605.704
A	15109.706	56.000	605.760	605.816
B	15119.609	56.000	605.813	605.917
C	15129.512	56.000	605.862	606.007
D	15139.415	56.000	605.909	606.086
E	15149.381	56.000	605.953	606.154
F	15159.381	56.000	605.993	606.210
G	15169.381	56.000	606.031	606.255
H	15179.381	56.000	606.066	606.287
I	15189.381	56.000	606.097	606.309
J	15199.381	56.000	606.125	606.318
K	15209.381	56.000	606.151	606.316
L	15219.381	56.000	606.173	606.302
M	15229.381	56.000	606.192	606.277
N	15239.381	56.000	606.207	606.242
℄.BRG.E.ABUT.	15245.381	56.000	606.215	606.215
BK.EAST ABUT.	15246.676	56.000	606.217	606.217

BEAM NO.13

LOCATION	STATION	OFFSET	THEORET. GRADE ELEVATION	THEORET.GRADE EL. ADJ. FOR D.L. DEFLECTION
BK.WEST ABUT.	15097.530	60.215	605.775	605.775
℄.BRG.W.ABUT.	15098.806	60.206	605.782	605.782
A	15108.701	60.142	605.837	605.894
B	15118.597	60.096	605.889	605.994
C	15128.494	60.067	605.938	606.084
D	15138.390	60.056	605.985	606.162
E	15148.365	60.056	606.029	606.229
F	15158.365	60.056	606.070	606.286
G	15168.365	60.056	606.108	606.330
H	15178.365	60.056	606.143	606.363
I	15188.365	60.056	606.175	606.385
J	15198.365	60.056	606.204	606.395
K	15208.365	60.056	606.229	606.394
L	15218.365	60.056	606.252	606.382
M	15228.365	60.056	606.271	606.358
N	15238.365	60.056	606.287	606.322
℄.BRG.E.ABUT.	15244.365	60.056	606.295	606.295
BK.EAST ABUT.	15245.660	60.056	606.297	606.297

BEAM NO.14

LOCATION	STATION	OFFSET	THEORET. GRADE ELEVATION	THEORET.GRADE EL. ADJ. FOR D.L. DEFLECTION
BK.WEST ABUT.	15095.962	66.755	605.895	605.895
~~CL.BRG.W.ABUT.~~	~~15097.235~~	~~66.745~~	~~605.902~~	~~605.902~~
A	15107.120	66.679	605.958	606.015
B	15117.005	66.630	606.011	606.116
C	15126.890	66.599	606.062	606.207
D	15136.775	66.584	606.109	606.286
E	15146.730	66.583	606.153	606.353
F	15156.730	66.583	606.195	606.410
G	15166.730	66.583	606.233	606.455
H	15176.730	66.583	606.269	606.489
I	15186.730	66.583	606.301	606.511
J	15196.730	66.583	606.330	606.522
K	15206.730	66.583	606.356	606.521
L	15216.730	66.583	606.379	606.509
M	15226.730	66.583	606.399	606.486
N	15236.730	66.583	606.416	606.451
CL.BRG.E.ABUT.	15242.730	66.583	606.424	606.424
BK.EAST ABUT.	15244.024	66.583	606.426	606.426

RT.CURB LINE (E.B.)

LOCATION	STATION	OFFSET	THEORET. GRADE ELEVATION	THEORET.GRADE EL. ADJ. FOR D.L. DEFLECTION
BK.WEST ABUT.	15095.649	68.000	605.682	605.682
℄.BRG.W.ABUT.	15096.920	68.000	605.690	605.690
A	15106.803	68.000	605.746	605.803
B	15116.685	68.000	605.800	605.905
C	15126.568	68.000	605.850	605.996
D	15136.451	68.000	605.898	606.074
E	15146.375	68.000	605.942	606.142
F	15156.375	68.000	605.984	606.199
G	15166.375	68.000	606.023	606.245
H	15176.375	68.000	606.058	606.278
I	15186.375	68.000	606.091	606.301
J	15196.375	68.000	606.120	606.312
K	15206.375	68.000	606.146	606.311
L	15216.375	68.000	606.169	606.299
M	15226.375	68.000	606.189	606.276
N	15236.375	68.000	606.206	606.241
℄.BRG.E.ABUT.	15242.375	68.000	606.214	606.214
BK.EAST ABUT.	15243.669	68.000	606.216	606.216

NOTE:
For Deck Elevation Deatails.
See Sheet S-7

Designed by
FLUOR DANIEL
Job: No. 836.700 Chicago, Illinois 60606
DRAWN: J.S. APPROVED:
DESIGNED: J.S. SCALE: -
CHECKED: D.W. DATE: 6-25-97

REVISIONS	
NAME	DATE

DECK ELEVATIONS
EAST BOUND

STATE OF ILLINOIS
DEPARTMENT OF TRANSPORTATION
SECTION 99-2 (K & HB-1-R)
FAI-80 OVER HOUBOLT RD. (FAU-0325)
BRIDGE 099-0301 E.B. AND 099-0302 W.B.
PHASE II
WILL COUNTY

MODEL: Drawing Views
FILE NAME: pw://transystems-pw.bentley.com:transyscorp-pw1-hosted/Documents/Projects_2018/CH401/401118002 2/02-TranSystems/CAD/62R27/Sheets/23-Structural/099-0301 & 099-0302 Existing/0990301EX-62R27-001-Existing Plans 11.dgn

TRANSYSTEMS

USER NAME = amkluver	DESIGNED -	REVISED -	
	CHECKED -	REVISED -	
PLOT SCALE = NTS	DRAWN -	REVISED -	
PLOT DATE = 6/23/2023	CHECKED -	REVISED -	

STATE OF ILLINOIS
DEPARTMENT OF TRANSPORTATION

EXISTING PLANS
STRUCTURE NO. 099-0301 & 099-0302

SHEET SE1-11 OF SE1-48 SHEETS

F.A.I. RTE.	SECTION	COUNTY	TOTAL SHEETS	SHEET NO.
I-80	FAI 80 21 STRUCTURE 6	WILL	898	569
		CONTRACT NO. 62R27		
	ILLINOIS	FED. AID PROJECT		

F.A.I. RTE.	SECTION	COUNTY	TOTAL SHEETS	SHEET NO.
0325	*	WILL	286	165
STA.	TO STA.			
FED. ROAD DIST. NO.	ILLINOIS	FED. AID PROJECT		

*99-2 (K & HB-1-R)

SHT. S-11 OF S-26

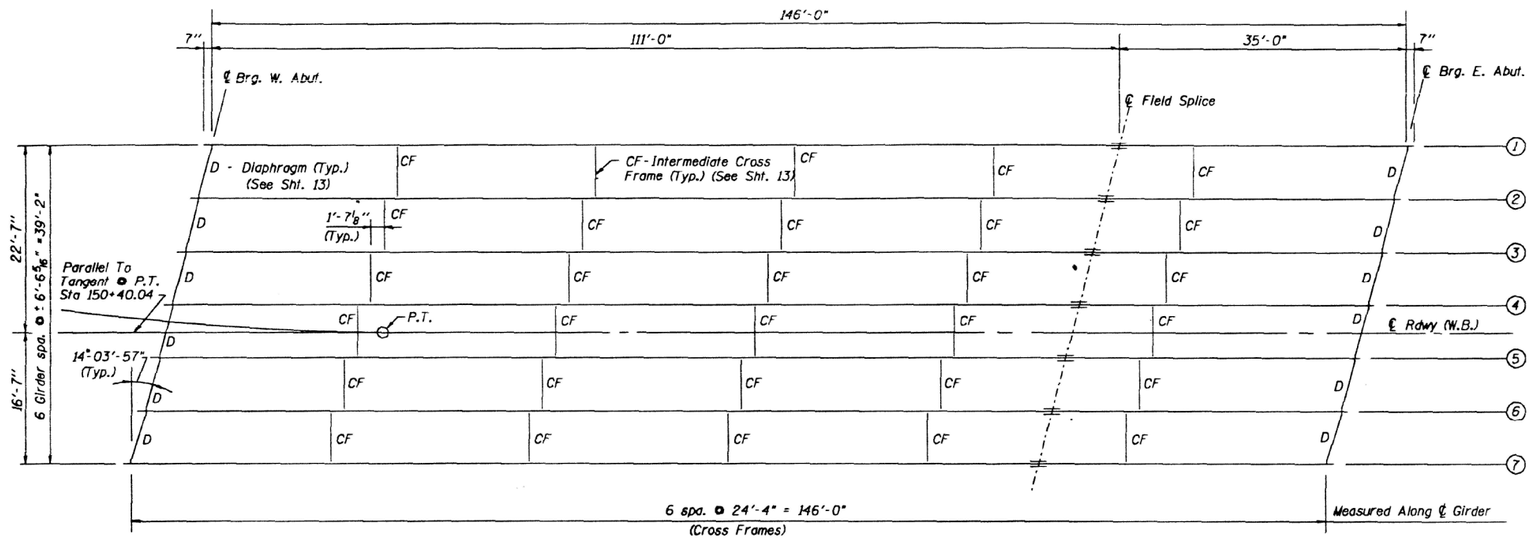

FRAMING PLAN - WEST BOUND

INTERIOR GIRDER MOMENT TABLE				
		@ 0.24 Span	@ 0.5 Span	@ 0.76 Span
Is	(In4)	54556	91683	54556
Ic (n=27)	(In4)	110917	161728	110917
Ss	(In3)	1992	3370	1992
Sc (n=9)	(In3)	2457.4	3886.1	2457.4
Z	(In3)	-	-	-
wℓ	(K/ft.)	0.99	0.99	0.99
Mℓ	('K)	1914	2625	1914
sℓ	(K/ft.)	0.26	0.26	0.26
Msℓ	('K)	505	693	505
Mt	('K)	1041	1411	1041
M (Imp)	('K)	188	254	188
$S_3(M_t+I)$	('K)	2048	2775	2048
Ma	('K)	5807	7921	5807
Mu	('K)	-	-	-
fsℓ non-comp	(ksi)	11.53	9.35	11.53
fsℓ (comp)	(ksi)	2.47	2.14	2.47
$fs_{S_3}(M_t+I)$	(ksi)	10.00	8.57	10.00
fs (Overload)	(ksi)	24.00	20.06	24.00
fs (Total)	(ksi)	31.20	26.08	31.20
VR	(K)	-	51.25	-

INTERIOR GIRDER REACTION TABLE			
		Abut.	
Rℓ	(K)	91	-
Rt	(K)	43.4	-
Imp.	(K)	7.9	-
R (Total)	(K)	142.3	-

Is and Ss are the moment of inertia and section modulus of the steel section used in computing fs (Total & Overload).
Ic and Sc are the moment of inertia and section modulus of the composite section used in computing fs (Total & Overload).
VR is the maximum live Load + Impact shear range in span.
fs (Overload) is the sum of the stresses due to $M_\ell + M_{s\ell} + S_3(M_t + I)$
fs (Total) (Non-compact Section) is the sum of the stresses due to $1.3[M_\ell + M_{s\ell} + S_3(M_t + I)]$
Ma (Applied Moment) = $1.3[M_\ell + M_{s\ell} + S_3(M_t + I)]$
M_ℓ - Moment due to dead loads.
$M_{s\ell}$ - Moment due to future wearing surface & parapet load.
M_t - Moment due to live load
I - Live load Impact

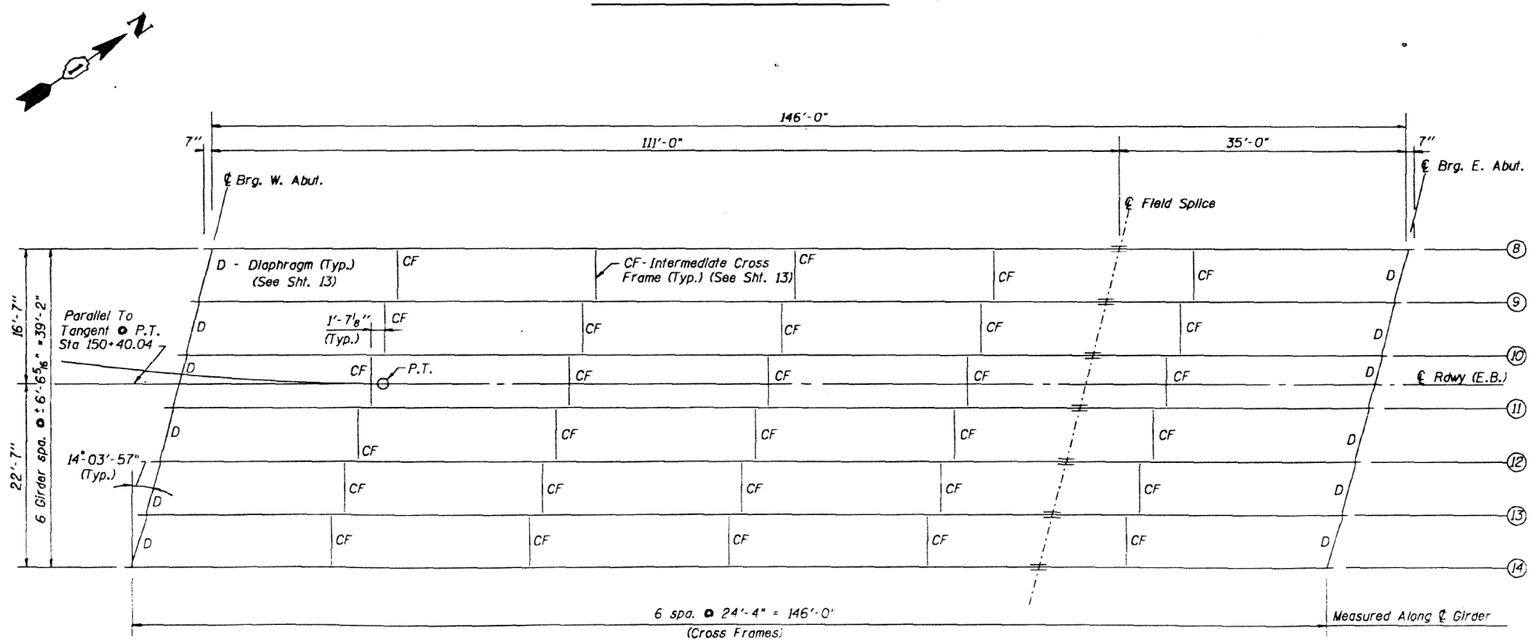

FRAMING PLAN - EAST BOUND

BILL OF MATERIAL

ITEM	UNIT	QUANTITY
FURNISHING AND ERECTING STRUCTURAL STEEL	L. SUM	1

NOTE:
Work this Sheet with Sheets S-12 & S-13

REVISIONS	
NAME	DATE

FRAMING PLAN
WEST AND EAST BOUND

STATE OF ILLINOIS
DEPARTMENT OF TRANSPORTATION
SECTION 99-2 (K & HB-1-R)
FAI-80 OVER HOUBOLT RD. (FAU-0325)
SN 099-0301 E.B. AND 099-0302 W.B.
PHASE II
WILL COUNTY

Designed by
FLUOR DANIEL
Job No. 636 TOC Chicago, Illinois 60606
DRAWN: O.P. SPONSORED:
DESIGNED: V.P. SCALE: NONE
CHECKED: O.P. DATE: 6-23-97

TRANSYSTEMS

USER NAME = amkluver	DESIGNED -	REVISED -
	CHECKED -	REVISED -
PLOT SCALE = NTS	DRAWN -	REVISED -
PLOT DATE = 6/23/2023	CHECKED -	REVISED -

STATE OF ILLINOIS
DEPARTMENT OF TRANSPORTATION

EXISTING PLANS
STRUCTURE NO. 099-0301 & 099-0302
SHEET SE1-12 OF SE1-48 SHEETS

F.A.I. RTE.	SECTION	COUNTY	TOTAL SHEETS	SHEET NO.
I-80	FAI 80 21 STRUCTURE 6	WILL	898	570
		CONTRACT NO. 62R27		
		ILLINOIS	FED. AID PROJECT	

MODEL: Drawing Views
FILE NAME: pw://transystems-pw.bentley.com:transyscorp-pw1-hosted/Documents/Projects_2018/CH401/401180022/02-TranSystems/CAD/62R27/Sheets/23-Structural/099-0301 & 099-0302 Existing/0990301EX-62R27-001-Existing Plans 12.dgn

99-2 (K & HB-1-R)

F.A.I. RTE.	SECTION	COUNTY	TOTAL SHEETS	SHEET NO.
0325	*	WILL	286	166
STA.	TO STA.			
FED. ROAD DIST. NO.	ILLINOIS	FED. AID PROJECT		

SHEET S-12 OF S-26

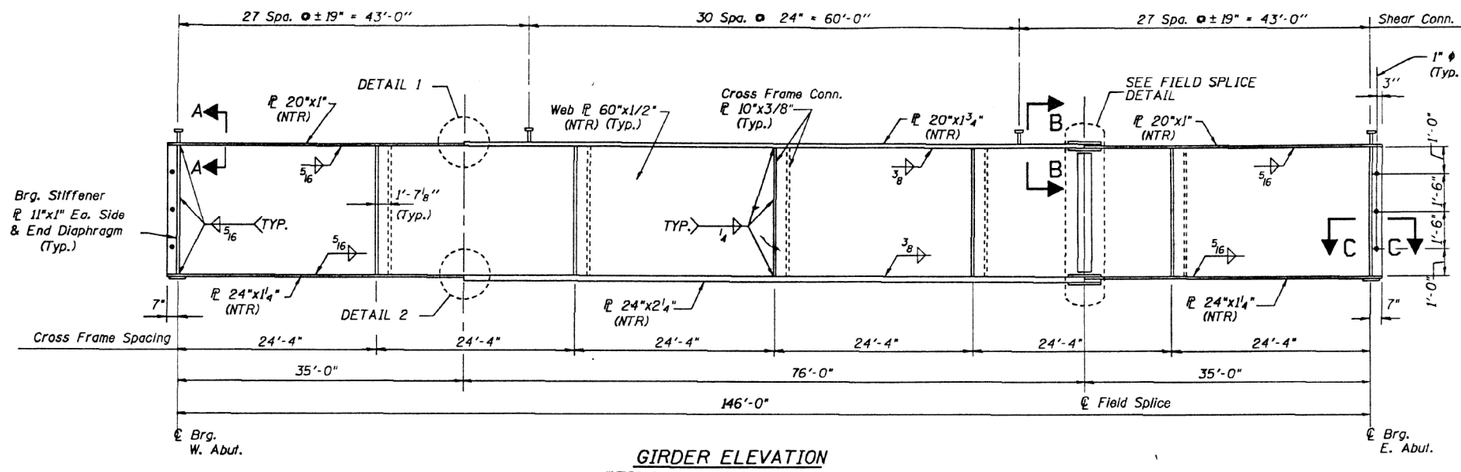

GIRDER ELEVATION

"NTR" denotes plates to which notch toughness requirements are applicable.

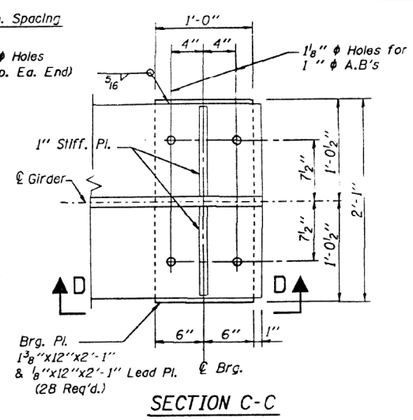

SECTION C-C

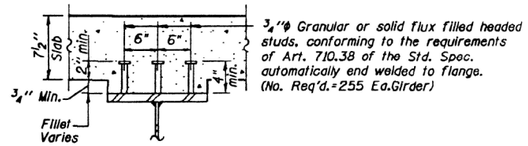

SECTION A-A

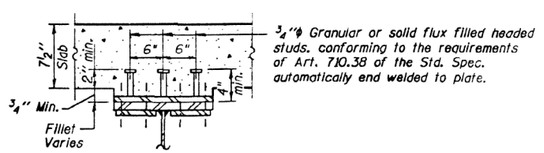

SECTION B-B

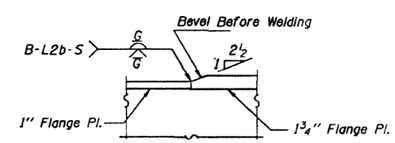

DETAIL 1

TOP FLANGE TRANSITION

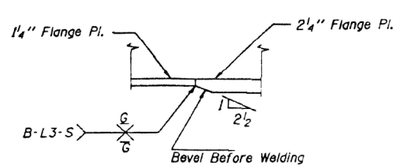

DETAIL 2

BOT. FLANGE TRANSITION

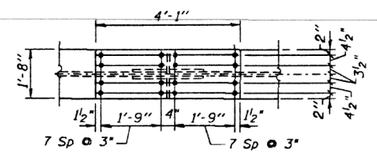

TOP FLANGE

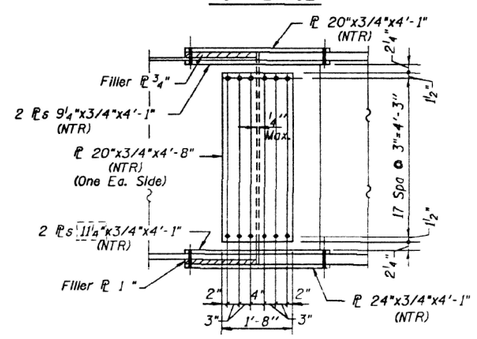

ELEVATION

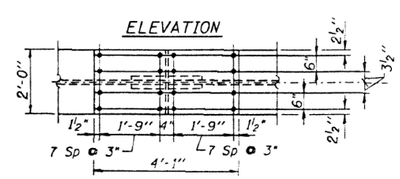

BOTTOM FLANGE

FIELD SPLICE DETAIL

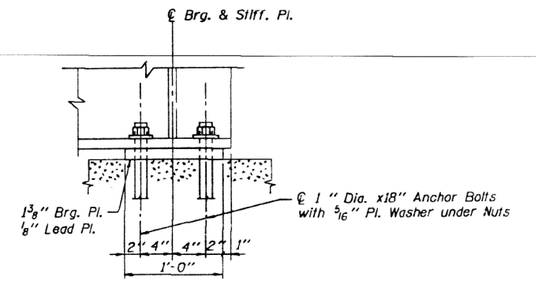

ELEVATION D-D

NOTES:

ALL STRUCTURAL STEEL SHALL BE AASHTO M270 (GRADE 36)

ALL BOLTS FOR FIELD SPLICES SHALL BE 7/8" DIA. HIGH STRENGTH BOLTS WITH 5/16" DIA. HOLES. (UNLESS NOTED)

WORK THIS SHEET WITH SHT. S-11, S-13 & S-15

Designed by FLUOR DANIEL
Job No. 836.10C — Chicago, Illinois 60606
DRAWN: G.P. — DESIGNED: V.P. — CHECKED: V.P.
APPROVED: — SCALE: 1 INCH — DATE: 6-23-97

AS REVISED

FAI-80 OVER HOUBOLT RD. (FAU-0327)

PLATE GIRDER DETAILS

REVISIONS	
NAME	DATE

STATE OF ILLINOIS
DEPARTMENT OF TRANSPORTATION
SECTION 99-2 (K & HB-1-R)
FAI-80 OVER HOUBOLT RD. (FAU-0327)
BRIDGE 099-0301 E.B. AND 099-0302
PHASE II
WILL COUNTY

As Revised 2-3-98 PMF

MODEL: Drawing Views
FILE NAME: pw://transystems-pw.bentley.com:transyscorp-pw1-hosted/Documents/Projects_2018/CH401/401180022/02-TranSystems/CAD/62R27/Sheets/23-Structural/099-0301 & 099-0302 Existing/09903031EX-62R27-001-Existing Plans 13.dgn

TRANSYSTEMS

USER NAME = amkluver	DESIGNED -	REVISED -	STATE OF ILLINOIS DEPARTMENT OF TRANSPORTATION
	CHECKED -	REVISED -	
PLOT SCALE = NTS	DRAWN -	REVISED -	
PLOT DATE = 6/23/2023	CHECKED -	REVISED -	

EXISTING PLANS
STRUCTURE NO. 099-0301 & 099-0302
SHEET SE1-13 OF SE1-48 SHEETS

F.A.I. RTE.	SECTION	COUNTY	TOTAL SHEETS	SHEET NO.
I-80	FAI 80 21 STRUCTURE 6	WILL	898	571
		CONTRACT NO. 62R27		
	ILLINOIS	FED. AID PROJECT		

TOP OF WEB ELEVATIONS

GIRDER NO.	℄ Brg. W.Abut.	℄ Splice	℄ Brg. E.Abut.
1	604.173	604.701	604.547
2	604.296	604.830	604.677
3	604.418	604.958	604.807
4	604.541	605.086	604.937
5	604.664	605.214	605.067
6	604.785	605.341	605.196
7	604.907	605.470	605.327
8	604.173	604.782	604.651
9	604.296	604.909	604.781
10	604.418	605.036	604.910
11	604.539	605.162	605.038
12	604.661	605.290	605.167
13	604.782	605.416	605.295
14	604.902	605.545	605.424

TABLE OF CAMBER DIMENSIONS

A	B	C	D	E	F
$1\frac{3}{4}''$	$2\frac{7}{16}''$	$1\frac{13}{16}''$	$\frac{1}{4}''$	$\frac{5}{16}''$	$\frac{3}{16}''$

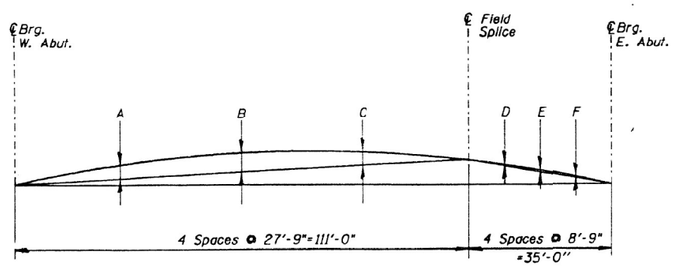

CAMBER DIAGRAM

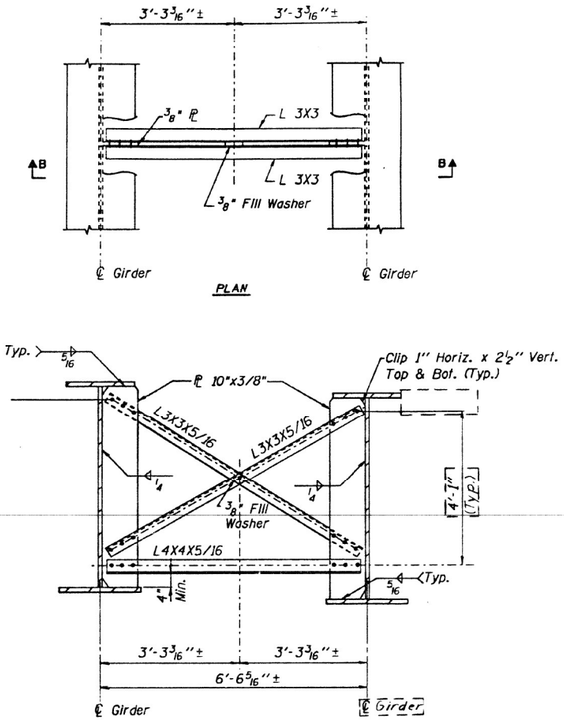

TYPICAL INTERIOR CROSS FRAME-CF

CF=60 Req'd.

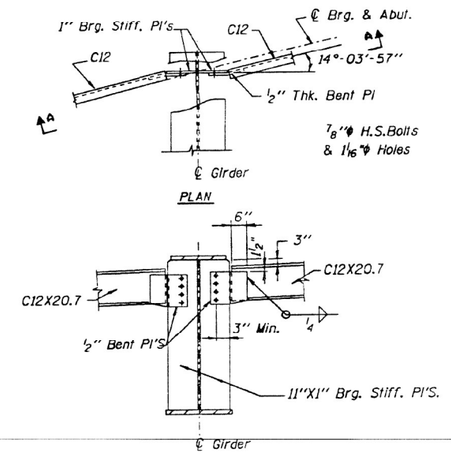

TYPICAL END DIAPHRAGM - D

D=24 Req'd.

Anchor Bolts shall be set before bolting Diaphragms.

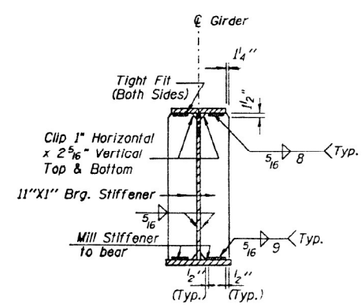

BEARING STIFFENER DETAIL

NOTES:

1. ALL STRUCTURAL STEEL SHALL BE AASHTO M270 (grade 36)
2. ALL BOLTS SHALL BE 7/8" DIA. H.S. BOLTS WITH 1 1/16" DIA. HOLES. TWO HARDENED WASHERS SHALL BE REQUIRED OVER ALL OVERSIZE HOLES.
3. WORK THIS SHEET WITH SHT. S-11 & S-12

AS REVISED

REVISIONS	
NAME	DATE

PLATE GIRDER, CROSS FRAME AND END DIAPHRAGM DETAILS

STATE OF ILLINOIS
DEPARTMENT OF TRANSPORTATION
SECTION 99-2 (K & HB-1-R)
FAI-80 OVER HOUBOLT RD. (FAU-0325)
SN 099-0301 E.B. & 099-0302 W.B.
PHASE II
WILL COUNTY

Designed by FLUOR DANIEL
Job No. 836700 Chicago, Illinois 60606
DRAWN: JS APPROVED:
DESIGNED: V.P./B.R. SCALE: 1 INCH
CHECKED: D.K. DATE: 8-23-77

As Revised 2-3-93 PMP

F.A.I. ROUTE NO.	SECTION	COUNTY	TOTAL SHEETS	SHEET NO.
0325	*	WILL	286	168

STA. TO STA.

FED. ROAD DIST. NO. ILLINOIS FED. AID PROJECT

Sheet S-14 of 26

* 99-2 (K & HB-1-R)

BEARING SEAT ELEVATION	
A	598.944
B	599.067
C	599.189
D	599.312
E	599.435
F	599.556
G	599.678

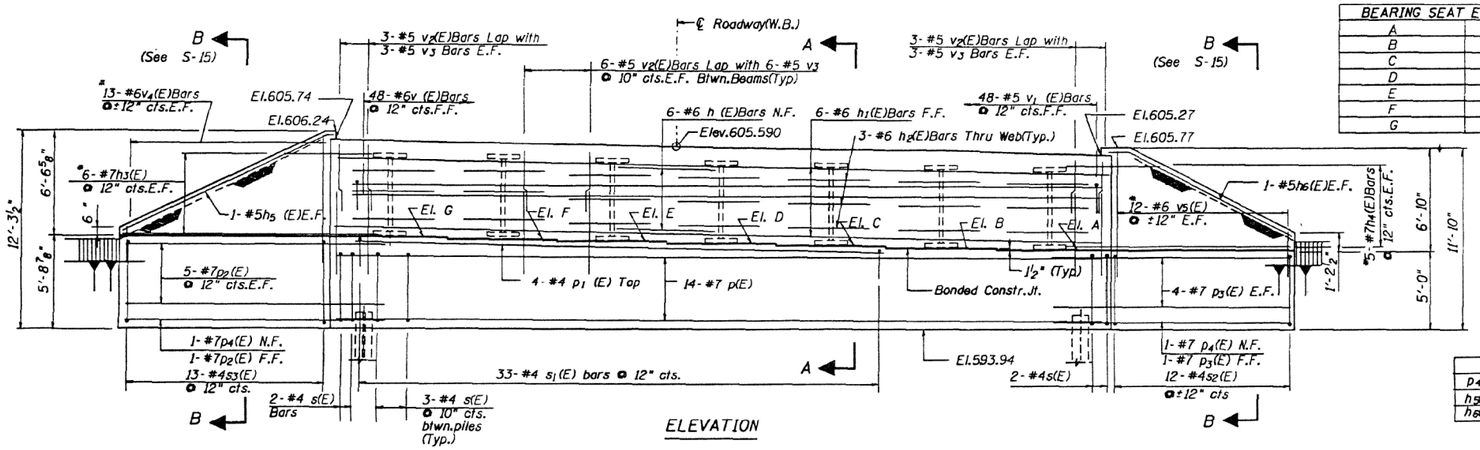

ELEVATION

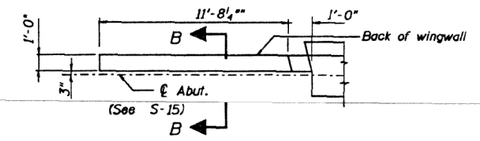

TOP VIEW -WINGWALL

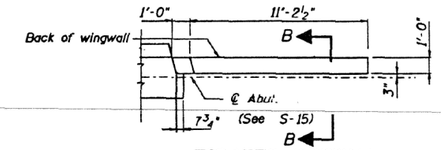

TOP VIEW -WINGWALL

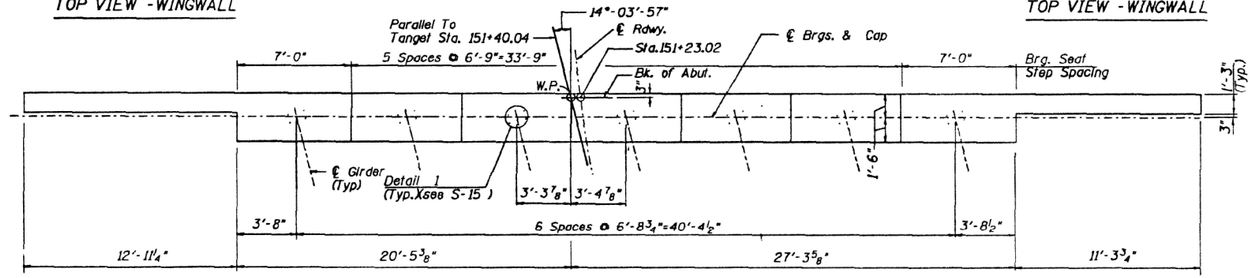

TOP VIEW OF CAP

PILE DATA

Type: Steel H-Piles(HP14 x 73)
Capacity: 50 Tons
Estimated Length: 29'
Required : 13 + 1 Test Pile

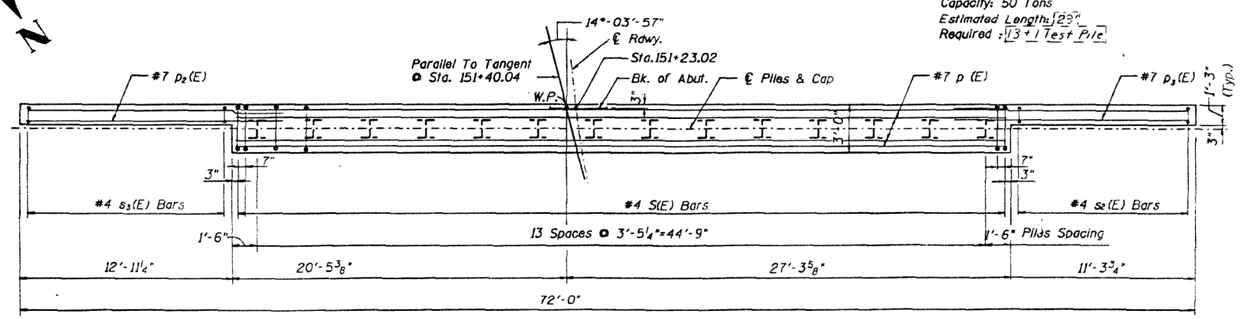

CAP PLAN-PILE LOCATION

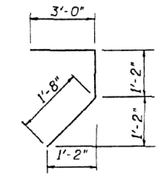

BAR v1 (E)

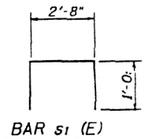

BAR s1 (E)

	A	B	C	D
p4(E)	2'-9"	0'-7"	10'-9"	0'-5"
h5(E)	13'-3"	0'-9"	-	0'-4"
h6(E)	12'-9"	0'-9"	-	0'-4"

BAR p4(E) h5(E) & h6(E)

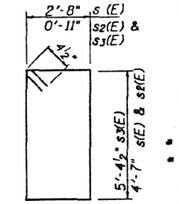

BAR s(E),s2(E) & s3(E)

Bar	No	Size	Length	Shape
h (E)	36	#6	6'-6"	
h1(E)	6	#6	47'-5"	
h2(E)	21	#6	5'-0"	
h3(E)	6	#7	21'-5"	
h4(E)	5	#7	20'-4"	
h5(E)	2	#5	14'-0"	
h6(E)	2	#5	13'-6"	
p (E)	14	#7	47'-5"	
p1(E)	4	#4	33'-8"	
p2(E)	11	#7	15'-6"	
p3(E)	9	#7	13'-11"	
p4(E)	2	#7	16'-1"	
s(E)	43	#4	15'-3"	
s1(E)	33	#4	4'-8"	
s2(E)	12	#4	11'-9"	
s3(E)	13	#4	13'-4"	
v (E)	48	#6	2'-6"	
v1(E)	48	#5	5'-10"	
v2(E)	84	#5	4'-0"	
v3(E)	84	#5	5'-6"	
v4(E)	13	#6	10'-11"	
v5(E)	12	#6	11'-11"	

* Cut Bars in Field

BILL OF MATERIAL		
ITEM	UNIT	QUANTITY
Class X Concrete	Cu.Yd.	65.0
Reinf.Steel (Epoxy)	Lbs.	6050
Furnishing Steel piles HP14x73	Lin.Ft.	377
Driving Steel piles	Lin.Ft.	351
Test pile	Each	1

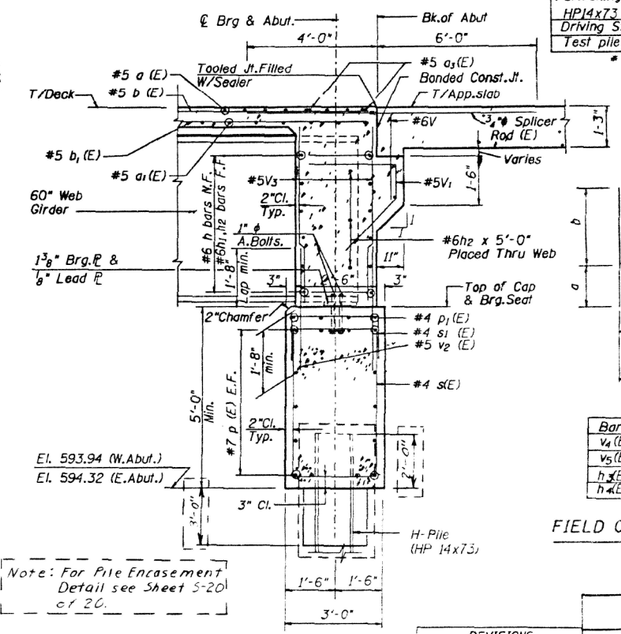

Note: For Pile Encasement Detail see Sheet S-20 of 20.

SECTION A-A

(Shf. S-4 & S-15)

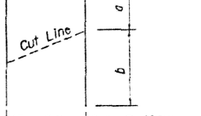

13-v4(E)	Bars @ 12"cts.	
12-v5(E)	Bars @ 12"cts.	
6-h3(E)	Bars @ 12"cts.	
5-h4(E)	Bars @ 12"cts.	

Bars	a	b
v4(E)	2'-7"	8'-4"
v5(E)	3'-2"	9'-9"
h3(E)	5'-11"	15'-5"
h4(E)	6'-2"	14'-2"

FIELD CUTTING DIAGRAM

Designed by FLUOR DANIEL

Job No. 516700 Chicago, Illinois 60606

Drawn - J.A. Approved -

Designed - R.C./B.P. Scale - NONE

Checked - D.W. Date - 6-25-97

REVISIONS	
NAME	DATE

INTEGRAL ABUTMENT-WEST
WEST BOUND

STATE OF ILLINOIS
DEPARTMENT OF TRANSPORTATION
SECTION 99-2 (K & HB-1-R)
FAI-80 OVER HOUBOLT RD. (FAU-0325)
SN 099-0301 E.B. AND 099-0302 W.B.
PHASE II
WILL COUNTY

As Revised 2-3-93 PMF

MODEL: Drawing Views
FILE NAME: pw://transystems-pw.bentley.com:transyscorp-pw1-hosted/Documents/Projects_2018/CH401/401180022/02-TranSystems/CAD/62R27/Sheets/23-Structural/099-0301 & 099-0302 Existing/09903031EX-62R27-001-Existing Plans 15.dgn

TRANSYSTEMS

USER NAME = amkluver	DESIGNED -	REVISED -
	CHECKED -	REVISED -
PLOT SCALE = NTS	DRAWN -	REVISED -
PLOT DATE = 6/23/2023	CHECKED -	REVISED -

STATE OF ILLINOIS
DEPARTMENT OF TRANSPORTATION

EXISTING PLANS
STRUCTURE NO. 099-0301 & 099-0302

SHEET SE1-15 OF SE1-48 SHEETS

F.A.I. RTE.	SECTION	COUNTY	TOTAL SHEETS	SHEET NO.
I-80	FAI 80 21 STRUCTURE 6	WILL	898	573

CONTRACT NO. 62R27

ILLINOIS FED. AID PROJECT

BEARING SEAT ELEVATION	
A	599.316
B	599.448
C	599.578
D	599.708
E	599.838
F	599.967
G	600.098

F.A.I. ROUTE NO.	SECTION	COUNTY	TOTAL SHEETS	SHEET NO.
0325	*	WILL	286	165
STA.		TO STA.		
PROJ. ROAD DIST. NO.	ILLINOIS	FED. AID PROJECT		

* 99-2 (K & HB-1-R)

Sheet S-15 of 26

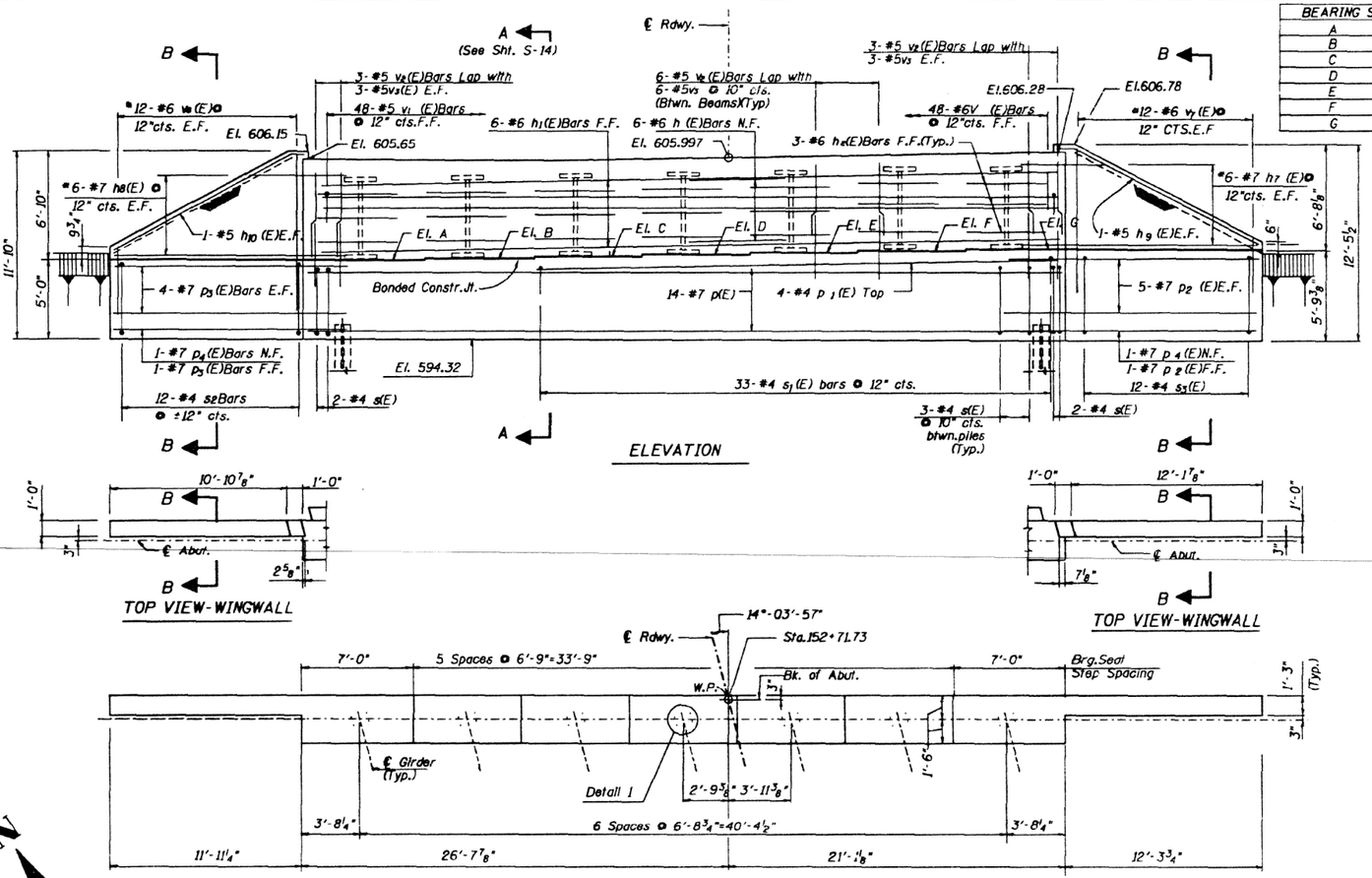

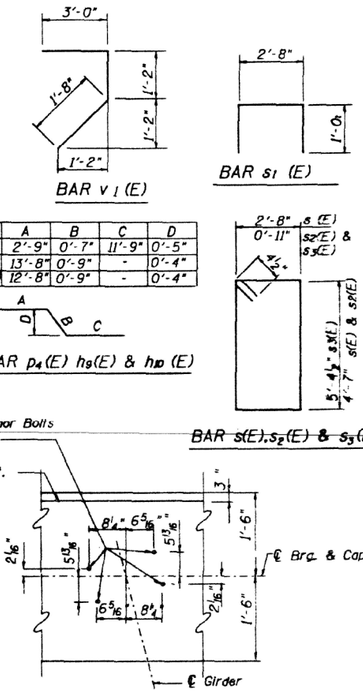

Bar	A	B	C	D
p4(E)	2'-9"	0'-7"	11'-9"	0'-5"
h9(E)	13'-8"	0'-9"	-	0'-4"
h10(E)	12'-8"	0'-9"	-	0'-4"

Bar	No	Size	Length	Shape
h (E)	36	#6	6'-6"	
h1(E)	6	#6	47'-5"	
h2(E)	21	#6	5'-0"	
h7(E)	6	#7	20'-0"	
h8(E)	5	#7	20'-6"	
h9(E)	2	#5	14'-5"	
h10 (E)	2	#5	13'-5"	
p (E)	14	#7	47'-5"	
p1(E)	4	#4	33'-8"	
p2(E)	11	#7	15'-6"	
p3(E)	9	#7	13'-11"	
p4(E)	2	#7	16'-1"	
s(E)	43	#4	15'-3"	
s1(E)	33	#4	4'-8"	
s2(E)	12	#4	11'-9"	
s3(E)	12	#4	13'-4"	
v (E)	48	#6	2'-6"	
v1(E)	48	#5	5'-10"	
v2(E)	84	#5	4'-0"	
v3(E)	84	#5	5'-6"	
v7(E)	13	#6	11'-1"	
v8(E)	12	#6	11'-8"	

BILL OF MATERIAL

ITEM	UNIT	QUANTITY
Class X Concrete	Cu.Yd.	65
Reinf. Steel (Epoxy)	Lbs.	6050
Furnishing Steel piles HP14x73	Lin.Ft.	338
Driving Steel piles	Lin.Ft.	312
Test pile	Each	1

* Cut Bars in field

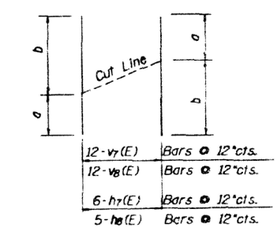

Bars	a	b
v7(E)	2'-9"	8'-4"
v8(E)	2'-10"	8'-10"
h7(E)	5'-3"	14'-9"
h8(E)	6'-0"	14'-6"

FIELD CUTTING DIAGRAM

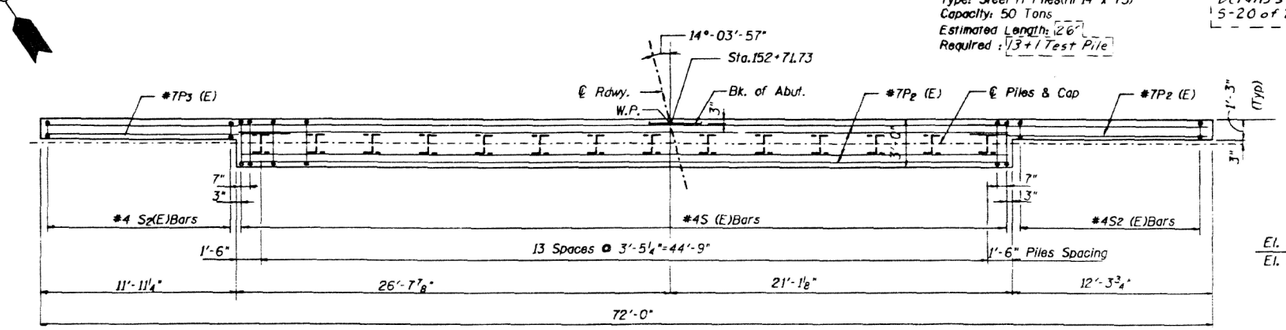

Note: For Pile Embedment Details see Sheet S-20 of 26.

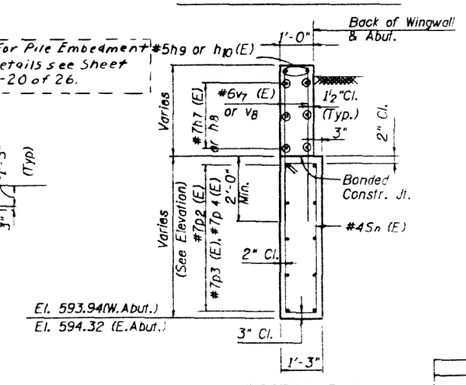

AS REVISED

REVISIONS	
NAME	DATE

INTEGRAL ABUTMENT - EAST WEST BOUND
STATE OF ILLINOIS
DEPARTMENT OF TRANSPORTATION
SECTION 99-2 (K & HB-1-R)
FAI-80 OVER HOUBOLT RD. (FAU-0325)
SN 099-0301 E.B. AND 099-0302 W.B.
PHASE II
WILL COUNTY

As Revised PMD 2-10-93

Designed by FLUOR DANIEL
Chicago, Illinois 60606
Job No. 636700
DRAWN: J.S.
DESIGNED: J.S.-R.C.
CHECKED: D.F.
APPROVED:
SCALE: NONE
DATE: 8-23-92

CADD FILE - 7005:294.7??
PLOT DATE

MODEL: Drawing Views
FILE NAME: pw://transystems-pw.bentley.com:transyscorp-pw1-hosted/Documents/Projects_2018/CH401/401180022/02-TranSystems/CAD/62R27/Sheets/23-Structural/099-0301 & 099-0302 Existing/0990301EX-62R27-001-Existing Plans 16.dgn

TRANSYSTEMS	USER NAME = amkluver	DESIGNED -	REVISED -	STATE OF ILLINOIS DEPARTMENT OF TRANSPORTATION	EXISTING PLANS STRUCTURE NO. 099-0301 & 099-0302	F.A.I. RTE.	SECTION	COUNTY	TOTAL SHEETS	SHEET NO.
		CHECKED -	REVISED -			I-80	FAI 80 21 STRUCTURE 6	WILL	898	574
	PLOT SCALE = NTS	DRAWN -	REVISED -					CONTRACT NO. 62R27		
	PLOT DATE = 6/23/2023	CHECKED -	REVISED -		SHEET SE1-16 OF SE1-48 SHEETS		ILLINOIS	FED. AID PROJECT		

BEARING SEAT ELEVATION	
A	598.944
B	599.067
C	599.189
D	599.310
E	599.432
F	599.553
G	599.673

* 99-2 (K & HB-1-R)

F.A.I. ROUTE NO.	SECTION	COUNTY	TOTAL SHEETS	SHEET NO.
0325		WILL	286	170 A
STA.		TO STA.		
FED. ROAD DIST. NO.	ILLINOIS	FED. AID PROJECT		

Sheet S-16 of 26

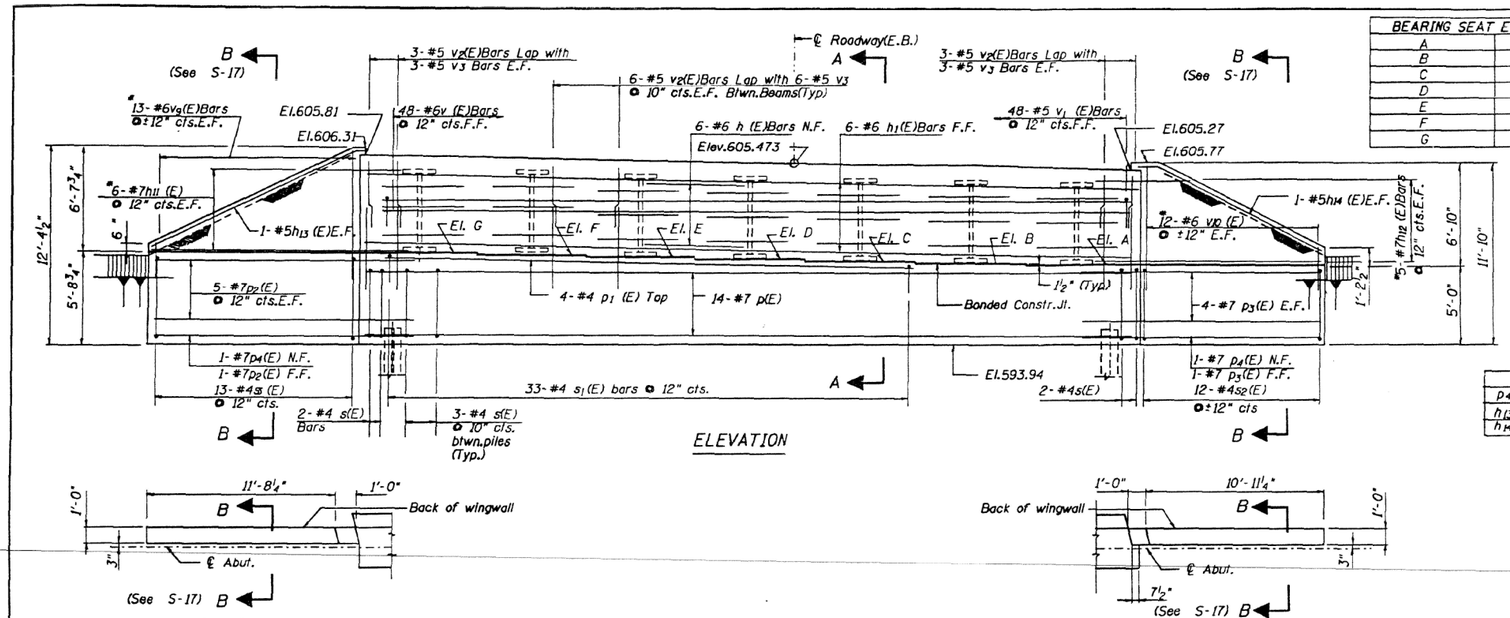

	A	B	C	D
p4(E)	2'-9"	0'-7"	10'-9"	0'-5"
h13(E)	13'-3"	0'-9"	-	0'-4"
h14(E)	12'-8"	0'-9"	-	0'-4"

Bars	a	b
v9(E)	2'-9"	8'-6"
v10(E)	3'-3"	8'-10"
h11(E)	5'-11"	15'-6"
h12(E)	6'-2"	14'-2"

13-v9(E)	Bars @ 12"cts.	
12-v10(E)	Bars @ 12"cts.	
6-h11 (E)	Bars @ 12"cts.	
5-h12 (E)	Bars @ 12"cts.	

Bar	No	Size	Length	Shape
h (E)	36	#6	6'-6"	—
h1(E)	6	#6	47'-5"	—
h2(E)	21	#6	5'-0"	—
h11 (E)	6	#7	21'-5"	—
h12(E)	5	#7	20'-4"	—
h13(E)	2	#5	14'-0"	—
h14(E)	2	#5	13'-5"	—
p (E)	14	#7	47'-5"	—
p1(E)	4	#4	33'-8"	—
p2(E)	11	#7	15'-6"	—
p3(E)	9	#7	13'-11"	—
p4(E)	2	#7	16'-1"	—
s(E)	43	#4	15'-3"	▭
s1(E)	33	#4	4'-8"	▭
s2(E)	12	#4	11'-9"	▭
s3(E)	13	#4	13'-4"	▭
v (E)	48	#6	2'-6"	—
v1(E)	48	#5	5'-10"	—
v2(E)	84	#5	4'-0"	—
v3(E)	84	#5	5'-6"	—
v9(E)	13	#6	11'-3"	—
v10(E)	12	#6	12'-1"	—

BILL OF MATERIAL

ITEM	UNIT	QUANTITY
Class X Concrete	Cu.Yd.	65.0
Reinf.steel(Epoxy)	Lbs.	6050
Furnishing Steel piles HP14x73	Lin.Ft.	312
Driving Steel piles	Lin.Ft.	286
Test pile	Each	1

* Cut Bars in Field

PILE DATA

Type: Steel H-Piles(HP14 x 73)
Capacity: 50 Tons
Estimated Length: 124'
Required : 13 + 1 Test Pile

Designed by FLUOR DANIEL
Job No. 536700 Chicago, Illinois 60606
DRAWN - A.L. APPROVED:
DESIGN - R.C.-R.P. SCALE - NONE
CHECKED - D.Y. DATE - 6-23-97

REVISIONS	
NAME	DATE

INTEGRAL ABUTMENT-WEST EAST BOUND
STATE OF ILLINOIS
DEPARTMENT OF TRANSPORTATION
SECTION 99-2 (K & HB-1-R)
FAI-80 OVER HOUBOLT RD. (FAU-02)
SN 099-0301 E.B. AND 099-0302 W.
PHASE II
WILL COUNTY

As Revised 2-3-93 PMP

MODEL: Drawing Views
FILE NAME: pw://transystems-pw.bentley.com:transyscorp-pw1-hosted/Documents/Projects_2018/CH401/401180022/02-TranSystems/CAD/62R27/Sheets/23-Structural/099-0301 & 099-0302 Existing/09903031EX-62R27-001-Existing Plans 17.dgn

TRANSYSTEMS

USER NAME = amkluver	DESIGNED -	REVISED -	
	CHECKED -	REVISED -	
PLOT SCALE = NTS	DRAWN -	REVISED -	
PLOT DATE = 6/23/2023	CHECKED -	REVISED -	

STATE OF ILLINOIS
DEPARTMENT OF TRANSPORTATION

EXISTING PLANS
STRUCTURE NO. 099-0301 & 099-0302
SHEET SE1-17 OF SE1-48 SHEETS

F.A.I. RTE.	SECTION	COUNTY	TOTAL SHEETS	SHEET NO.
I-80	FAI 80 21 STRUCTURE 6	WILL	898	575
		CONTRACT NO. 62R27		
	ILLINOIS	FED. AID PROJECT		

F.A.I. RTE. NO.	SECTION	COUNTY	TOTAL SHEETS	SHEET NO.
0325	*	WILL	286	174

STA. TO STA.

FED. ROAD DIST. NO. | ILLINOIS | FED. AID PROJECT

Sheet S-17 of 26

*99-2 (K & HB-1-R)

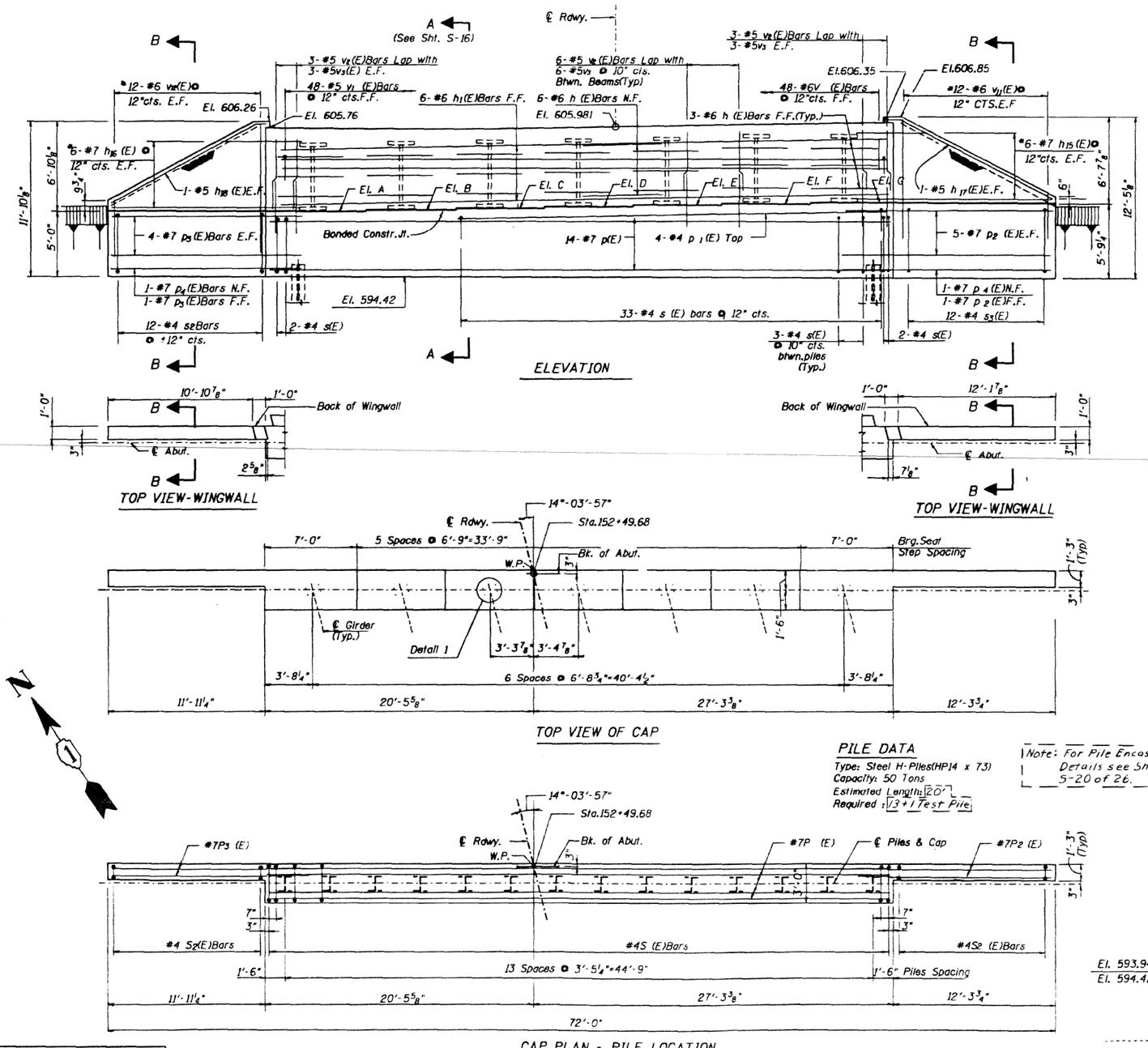

BEARING SEAT ELEVATION	
A	599.422
B	599.552
C	599.681
D	599.809
E	599.938
F	600.066
G	600.195

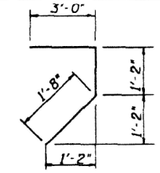

BAR v1 (E)

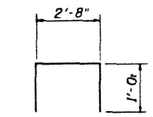

BAR s1 (E)

Bar	A	B	C	D
p4(E)	2'-9"	0'-7"	11'-9"	0'-5"
h17 (E)	13'-8"	0'-9"	-	0'-4"
h18 (E)	12'-8"	0'-9"	-	0'-4"

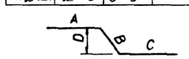

BAR p4(E) h17(E) & h18(E)

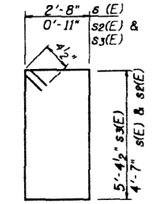

BAR s(E),s2(E) & s3(E)

Bar	No	Size	Length	Shape
h (E)	36	#6	6'-6"	—
h1(E)	6	#6	47'-5"	—
h2(E)	21	#6	5'-0"	—
h15(E)	6	#7	20'-0"	—
h16(E)	5	#7	20'-6"	—
h17(E)	2	#5	14'-5"	—
h18(E)	2	#5	13'-5"	—
p (E)	14	#7	47'-5"	—
p1(E)	4	#4	33'-8"	—
p2(E)	11	#7	15'-6"	—
p3(E)	9	#7	13'-11"	—
p4(E)	2	#7	16'-1"	—
s(E)	43	#4	15'-3"	▭
s1(E)	33	#4	4'-8"	▭
s2(E)	12	#4	11'-9"	▭
s3(E)	12	#4	13'-4"	▭
v (E)	48	#6	2'-6"	—
v1(E)	48	#5	5'-10"	⌒
v2(E)	84	#5	4'-0"	—
v3(E)	84	#5	5'-6"	—
v11 (E)	13	#6	11'-3"	—
v12 (E)	12	#6	11'-10"	—

* Cut Bars In field

BILL OF MATERIAL		
ITEM	UNIT	QUANTITY
Class x Concrete	Cu.Yd.	65.0
Reinf.steel(Epoxy)	Lbs.	6050
Furnishing Steel piles HP14x73	Lin.Ft.	260
Driving Steel piles	Lin.Ft.	134
Test pile	Each	1

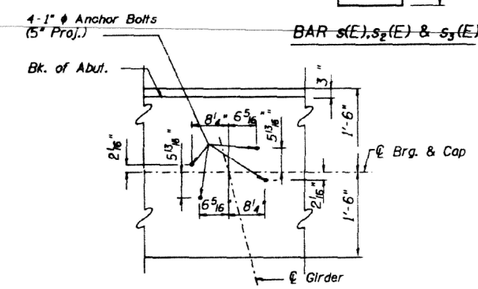

DETAIL-1
ANCHOR BOLT LOCATIONS

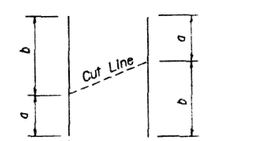

12-v11 (E)	Bars @ 12"cts.	
12-v12 (E)	Bars @ 12"cts.	
6-h15 (E)	Bars @ 12"cts.	
5-h16 (E)	Bars @ 12"cts.	

Bars	a	b
v11(E)	2'-10"	8'-5"
v12(E)	2'-11"	8'-11"
h15 (E)	5'-3"	14'-9"
h16 (E)	6'-0"	14'-6"

FIELD CUTTING DIAGRAM

PILE DATA
Type: Steel H-Piles(HP14 x 73)
Capacity: 50 Tons
Estimated Length: 20'
Required: 13+1 Test Pile

Note: For Pile Encasement Details see Sheet 5-20 of 26.

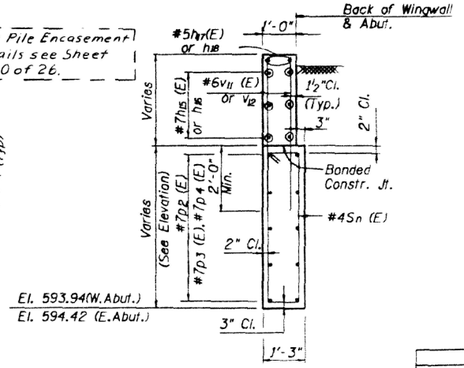

SECTION B-B
(Sht. S-16)

AS REVISED

REVISIONS	
NAME	DATE

As Revised PMP 2-18-9

INTEGRAL ABUTMENT - EAST
EAST BOUND
STATE OF ILLINOIS
DEPARTMENT OF TRANSPORTATION
SECTION 99-2 K & HB-1-R)
FAI-80 OVER HOUBOLT RD. (FAU-0325)
SN 099-0301 E.B. AND 099-0302 W.B
PHASE II
WILL COUNTY

Designed by FLUOR DANIEL
Job No. 836700 Chicago, Illinois 60606
DESIGN : A.A. APPROVED :
DRAWN : J.L./A.C. SCALE : NONE
CHECKED : C.V. DATE : 6-29-92

CADD FILE - 7005129.200
PLOT DATE

MODEL: Drawing Views
FILE NAME: pw://transystems-pw.bentley.com:transyscorp-pw1-hosted/Documents/Projects_2018/CH401/401180022/02-TranSystems/CAD/62R27/Sheets/23-Structural/099-0301 & 099-0302 Existing/0990301EX-62R27-001-Existing Plans 18.dgn

TRANSYSTEMS

USER NAME = amkluver	DESIGNED -	REVISED -
	CHECKED -	REVISED -
PLOT SCALE = NTS	DRAWN -	REVISED -
PLOT DATE = 6/23/2023	CHECKED -	REVISED -

STATE OF ILLINOIS
DEPARTMENT OF TRANSPORTATION

EXISTING PLANS
STRUCTURE NO. 099-0301 & 099-0302

SHEET SE1-18 OF SE1-48 SHEETS

F.A.I. RTE.	SECTION	COUNTY	TOTAL SHEETS	SHEET NO.
I-80	FAI 80 21 STRUCTURE 6	WILL	898	576
		CONTRACT NO. 62R27		
		ILLINOIS	FED. AID PROJECT	

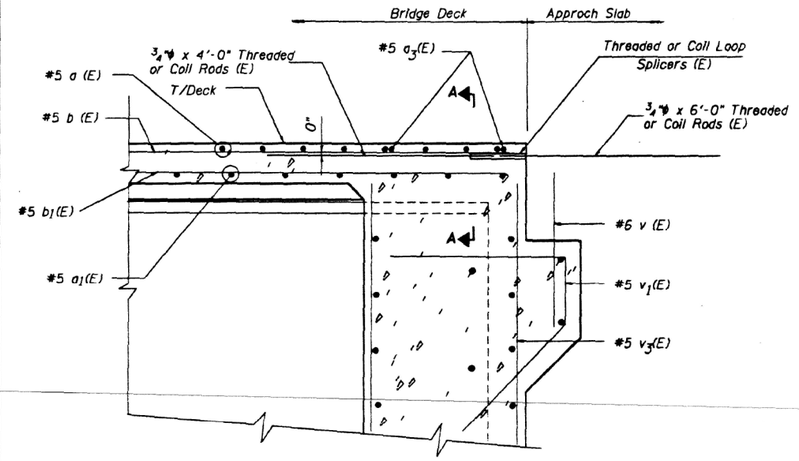

SECTION THRU INTERGAL ABUTMENT

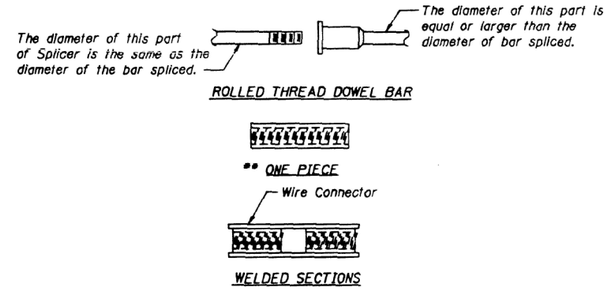

SPLICER ALTERNATIVES

** Heavy Hex Nuts conforming to ASTM A 563, Grade C, D or DH may be used.

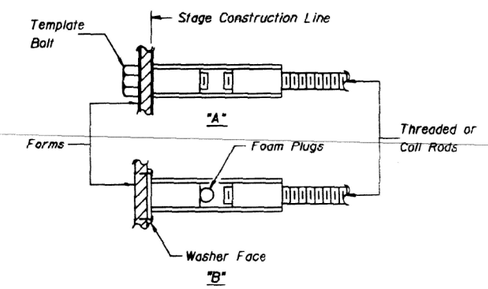

INSTALLATION AND SETTING METHODS

"A" : Set splicer by means of a template bolt.
"B" : Set splicer by nailing to wood forms or cementing to steel forms.
(E) : Indicates epoxy coating.

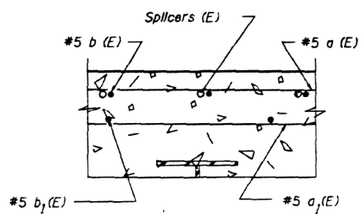

SECTION A-A

SPLICER DETAILS

(No. Req'd. 180)

Cost Incidental to Reinforcement Bars (Epoxy Coated)

NOTES

Steel Splicer (Coupler) assembly shall be of an approved type and shall develop in tension at least 125 percent of the yield strength of the lapped reinforcement bars.

Steel Splicer rods shall be of minimum 60 ksi yield strength, threaded or colled full length and have effective tensile stress area equal to or greater than that of the lapped reinforcement bars.

All reinforcement bars shall be lapped and tied to the splicer rods.

Splicer (coupler) assembly in the slab shall be epoxy coated in accordance with the requirements for reinforcement bars.

Other systems of similar design may be submitted to the Engineer for approval. Approval shall be based on certified test results from an approved testing laboratory that the proposed splicer (coupler) assembly satisfies the following requirements:

① Minimum Capacity (Tension in kips) = $1.25 \times fy \times A_1$

② Minimum *Pull-out Strength (Tension in kips) = $1.25 \times fs_{allow} \times A_1$

Where fy = Yield strength of lapped reinforcement bars in ksi.
fs_{allow} = Allowable tensile stress in lapped reinforcement bars in ksi (Service Load)
A_1 = Tensile stress area of lapped reinforcement bars.
* = 28 day concrete

Typical Splicer (Coupler) Assembly Sizes:

In Slabs	#5 bar lap with 3/4"ϕ Splicer (Coupler) x 2'-0" Splicer Rods	Minimum Capacity = 23.0 kips-tension Minimum Pull-out Strength = 9.2 kips-tension
In Sub-Structure	#7 bar lap with 1"ϕ Splicer (Coupler) x 3'-5" Splicer Rods	Minimum Capacity = 45.1 kips-tension Minimum Pull-out Strength = 18.0 kips-tension
	#8 bar lap with 1 1/4"ϕ Splicer (Coupler) x 4'-6" Splicer Rods	Minimum Capacity = 58.9 kips-tension Minimum Pull-out Strength = 23.6 kips-tension

Designed by FLUOR DANIEL
Job No. 436100 Chicago, Illinois 60606
DRAWN: D.P. APPROVED:
DESIGNED: D.S. SCALE: NONE
CHECKED: D.B. DATE: 6-25-87

REVISIONS	
NAME	DATE

BAR SPLICER (COUPLER) DETAILS

STATE OF ILLINOIS
DEPARTMENT OF TRANSPORTATION
SECTION 99-2 (K & HB-1-R)
FAI-80 OVER HOUBOLT RD. (FAU-0325)
BRIDGE 099-0301 E.B. AND 099-0302 W.B.
PHASE II
WILL COUNTY

D	E	H	K	"d"
1"	1 1/8"	13/16"	1 3/4"	1/4"
1 1/2"	1 5/8"	1 5/16"	2 1/8"	1/2"
2"	2 1/8"	1 13/16"	2 7/8"	1/2"
2 1/2"	2 5/8"	2 5/16"	3 3/8"	1"

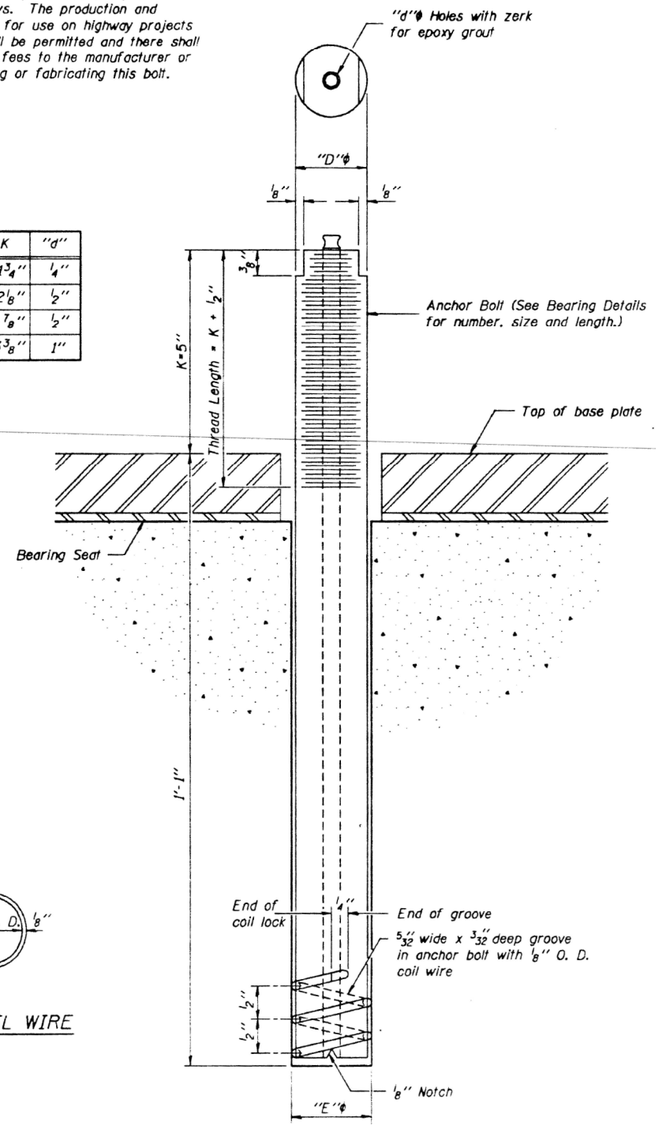

ILLINOIS COIL-LOCK ANCHOR BOLT

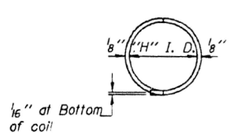

PLAN-COIL WIRE

MATERIALS FOR ILLINOIS COIL-LOCK ANCHOR BOLT

The anchor bolt shall be fabricated from cold drawn or hot finished seamless carbon steel mechanical tubing conforming to ASTM A519, Grade 1026 and supplied with hexagonal nuts and cut washers.

The coil wire shall be made of any suitable soft steel wire.

The finished anchor bolt shall be cleaned of rust and other foreign materials and wrapped or packaged to prevent contamination until they are installed.

The epoxy grout shall be a two-component, epoxy resin bonding system comforming to ASTM C881, Type 1, Grade 1 and of a Class suitable for the temperature at installation.

INSTALLATION PROCEDURE for the ILLINOIS COIL-LOCK ANCHOR BOLT

1. With the coil wire in place, the bolt shall be inserted into the hole and turned clockwise to a snug fit in the hole. Nut and washer shall be placed on the bolt. The nut shall be tensioned until the steel base plates are held securely to the concrete bearing seat.
2. Epoxy grout shall be pumped through the zerk fitting with a pressure gun. Pumping shall continue until the epoxy overflows the hole around the bolt shank. After pumping is discontinued, excess epoxy shall be immediately wiped off.

ALTERNATE ANCHOR BOLTS

The Contractor may use, at his option, the capsule or the adhesive cartridge type anchor rods that have been previously tested and given a prior approval by the Department. The Contractor shall install these anchor rods in pre-drilled holes in accordance with the manufacturer's recommendations and procedures.

The capsule or the adhesive cartridge type anchor rods shall be a two part system composed of:

1. A threaded rod stud with nut and washer conforming to ASTM A307.
2. A sealed glass capsule or a sealed glass adhesive cartridge containing premeasured amounts of the adhesive chemical.

GENERAL NOTES

Holes in the masonry for anchor bolts shall be drilled through the base plates to the diameter and depth shown or in accordance with the manufacturer's recommendation after beams or girders have been erected and adjusted.

Prior to setting the bolts, the holes shall be dry and all dust and loose particles shall be removed by the use of compressed air or vacuuming.

The anchor bolts, furnished and installed and including the epoxy grout or capsules shall not be paid for separately but shall be included in the unit bid price for "Furnishing and Erecting Structural Steel".

WORK THIS SHEET WITH SHT. S-12

Designed by FLUOR DANIEL
Job No. 636106 Chicago, Illinois 60606
Drawn G.R./DE PRO: APPROVED:
DESIGNED: SCALE: - NONE
CHECKED: G.R. DATE: 6-25-97

REVISIONS	
NAME	DATE

ANCHOR BOLT DETAILS FOR BEARINGS

STATE OF ILLINOIS
DEPARTMENT OF TRANSPORTATION
SECTION 99-2 (K & HB-1-R)
FAI-80 OVER HOUBOLT RD. (FAU-0325
SN 099-0301 E.B. AND 099-0302 W.B
PHASE II
WILL COUNTY

*99-2 (K & HB-1-R)

ALT. ITL.	SECTION	COUNTY	TOTAL SHEETS	SHEET NO.
0325	*	WILL	286	174A
STA.		TO STA.		
FED. ROAD DIST. NO.	ILLINOIS	FED. AID PROJECT		

SHEET S-20 OF S

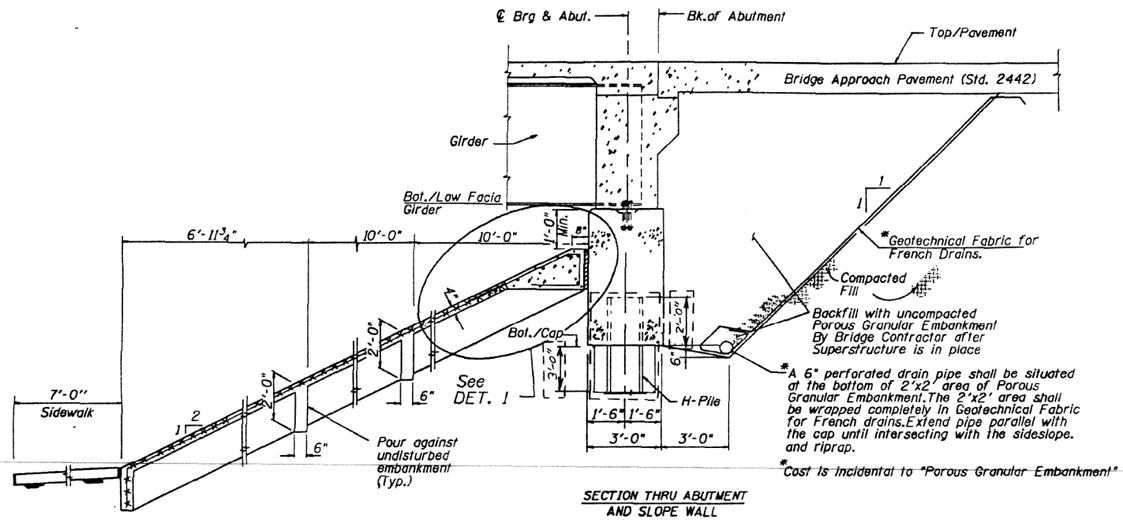

SECTION THRU ABUTMENT AND SLOPE WALL
(⊙ Rt. L's)

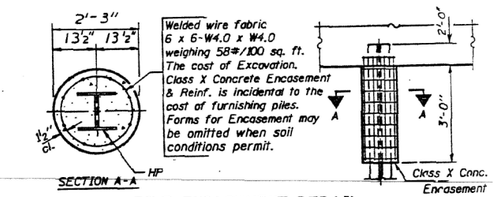

SECTION A-A

PILE ENCASEMENT DETAIL

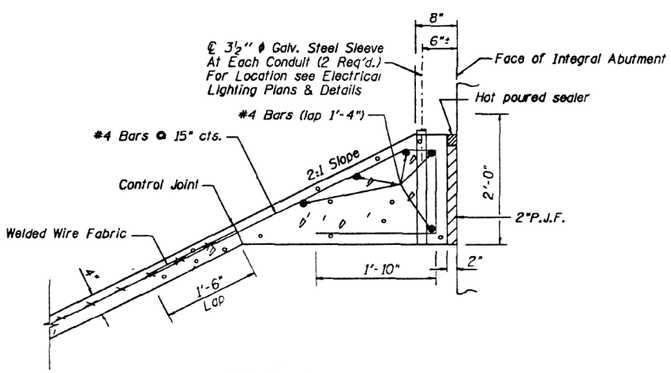

DETAIL 1

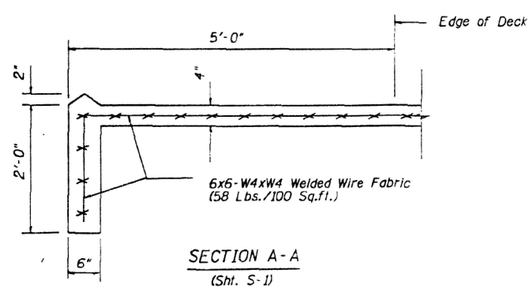

SECTION A-A
(Sht. S-1)

BILL OF MATERIAL
SN 099-0301 E.B. AND SN 099-0302 W.B.

ITEM	UNIT	QUANTITY
POROUS GRANULAR EMBANKMENT	CU. YD.	672
SLOPE WALL 4 IN.	SQ. YD.	515

Designed by
FLUOR DANIEL
Job No. 836TOC Chicago, Illinois 60606
Drawn J.F. APPROVED
Reviewed D.W. SCALE = NONE
Checked D.W. DATE = 9-22-97

AS REVISED

REVISIONS	
NAME	DATE

MISCELLANEOUS DETAILS

STATE OF ILLINOIS
DEPARTMENT OF TRANSPORTATION
SECTION 99-2 (K & HB-1-R)
FAU-80 OVER NOUBOLT RD. (FAU-037
BRIDGE 099-0301 E.B. AND 099-0302
PHASE II
WILL COUNTY

As Revised 2-3-93 PMF

MODEL: Drawing Views
FILE NAME: pw://transystems-pw.bentley.com:transyscorp-pw1-hosted/Documents/Projects_2018/CH401/401180022/02-TranSystems/CAD/62R27/Sheets/23-Structural/099-0301 & 099-0302 Existing/0990301EX-62R27-001-Existing Plans 21.dgn

TRANSYSTEMS	USER NAME = amkluver	DESIGNED -	REVISED -	STATE OF ILLINOIS DEPARTMENT OF TRANSPORTATION	EXISTING PLANS STRUCTURE NO. 099-0301 & 099-0302	F.A.I. RTE.	SECTION	COUNTY	TOTAL SHEETS	SHEET NO.
		CHECKED -	REVISED -			I-80	FAI 80 21 STRUCTURE 6	WILL	898	579
	PLOT SCALE = NTS	DRAWN -	REVISED -			CONTRACT NO. 62R27				
	PLOT DATE = 6/23/2023	CHECKED -	REVISED -		SHEET SE1-21 OF SE1-48 SHEETS	ILLINOIS	FED. AID PROJECT			

FAU RTE.	SECTION	COUNTY	TOTAL SHEETS	SHEET NO.
0325	*	WILL	286	175
STA.		TO STA.		
FED. ROAD DIST. NO.	ILLINOIS	FED. AID PROJECT -		

*99-2 (K & HB-1-R)

SHEET S-21 OF S-26

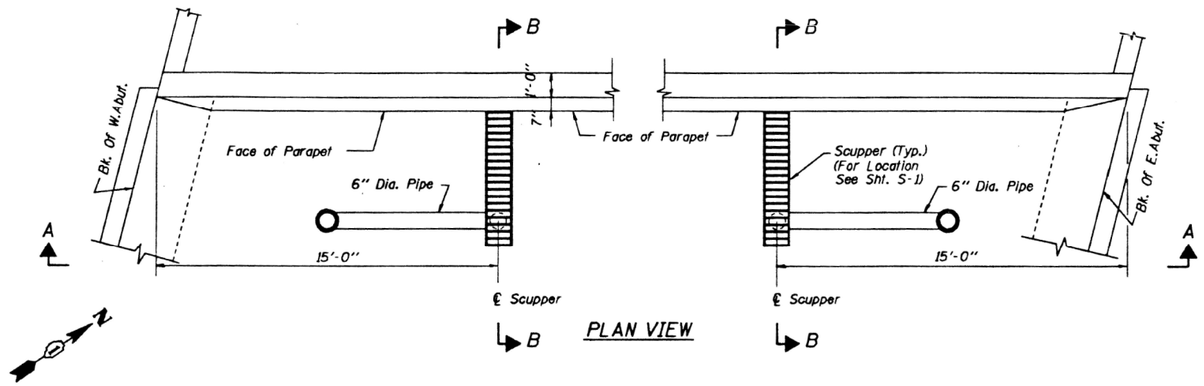

PLAN VIEW

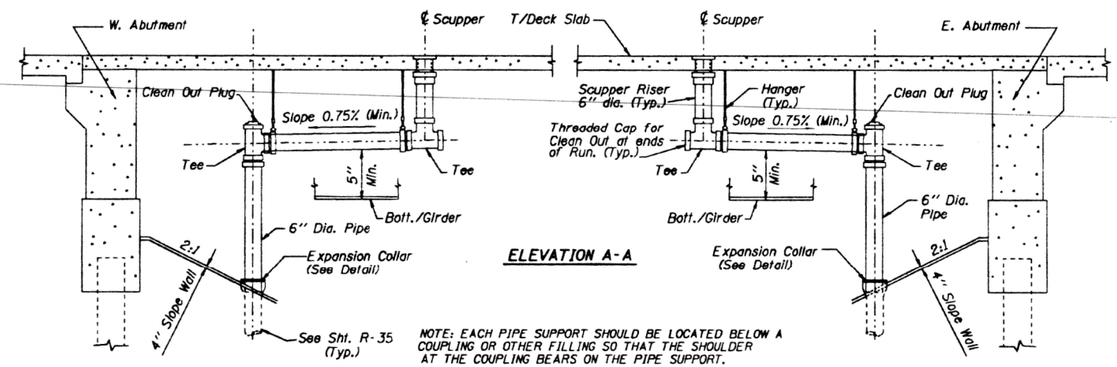

ELEVATION A-A

NOTE: EACH PIPE SUPPORT SHOULD BE LOCATED BELOW A COUPLING OR OTHER FILLING SO THAT THE SHOULDER AT THE COUPLING BEARS ON THE PIPE SUPPORT.

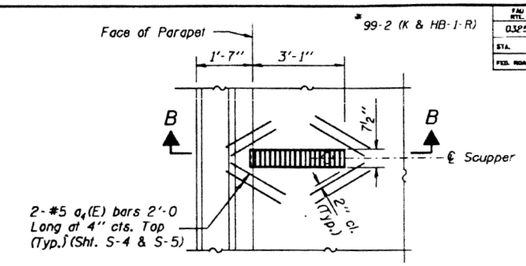

PLAN

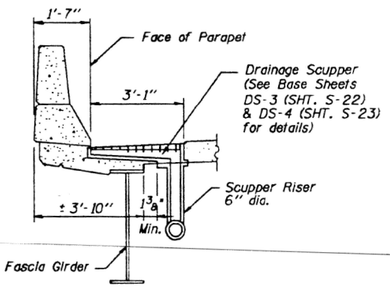

SECTION B-B

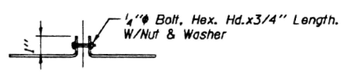

SECTION C-C

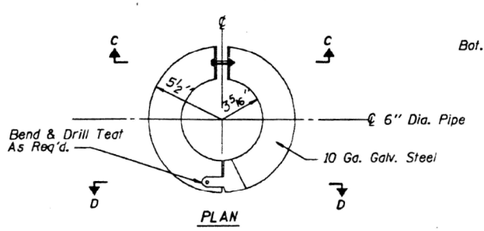

PLAN

SECTION D-D

DETAIL OF EXPANSION COLLAR

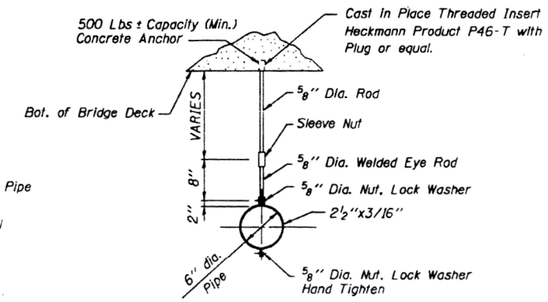

HANGER DETAIL

NOTES:

ALL DRAIN PIPES AND FITTINGS SHALL BE FIBERGLASS CONFORMING TO ASTM D2996 RTRP OR ASTM D2997 RTRP WITH SHORT TERM RUPTURE STRENGTH HOOP TENSILE STRESS OF 30,000 PSI MINIMUM. THE SURFACE OF FIBREGLASS PIPE SHALL BE FREE OF BOND INHIBITING AGENTS.

ALL PIPE HANGERS, SUPPORTS AND HARDWARE SHALL BE GALVANIZED BY THE HOT-DIP PROCESS. THE ZINC COATING SHALL CONFORM TO THE REQUIREMENTS OF ASTM A12 J.

ALL EXTERIOR SURFACES OF THE FLOOR DRAINS SHALL BE PAINTED WITH THE INTERMEDIATE COAT AND TOP COAT SPECIFIED FOR STRUCTURAL STEEL IN SECTION 509 OF THE STANDARD SPECIFICATIONS EXCEPT THAT THE COLOR SHALL BE MUNSELL NO. 7.5 G4/8 INTERSTATE GREEN. FIBERGLASS TO HAVE PREWASH AS PER MIL-P-15328 B PRIOR TO PAINTING.

PIPE HANGERS SHALL BE PROVIDED ON ALL HORIZONTAL PIPES AT EACH TEE, ELBOW, OR CHANGE IN DIRECTION AND AT INTERMEDIATE POINTS NOT MORE THAN 5'-0" ON CENTERS.

THE CONTRACTOR MAY USE ALTERNATE PIPE HANGERS. THE PIPE HANGERS SHALL HAVE A LOAD CAPACITY OF NOT LESS THAN 500 LBS. AND SHALL BE DESIGNED SO AS NOT TO APPLY EXCESSIVE COMPRESSIVE STRESS TO THE PIPE. ALTERNATE PIPE HANGER DESIGNS MUST BE APPROVED BY THE ENGINEER PRIOR TO THEIR USE.

DRAINS SHALL BE LOCATED CLEAR OF ALL CROSS FRAMES.

WORK THIS SHEET WITH SHT. S-1, S-4, S-5, S-22, S-23 & R-35

BILL OF MATERIAL

ITEM	UNIT	ESTIMATED QUANTITIES
SCUPPERS	EACH	4
BRIDGE DRAINAGE SYSTEM	L. SUM	1

NOTE:
COST OF FURNISHING AND INSTALLING DRAIN PIPE, FITTINGS, ELBOWS, PLATES AND MOUNTING HARDWARE NECESSARY TO INSTALL THE BRIDGE DRAINAGE SYSTEM SHALL BE PAID FOR AT THE CONTRACT LUMP SUM PRICE FOR BRIDGE DRAINAGE SYSTEM.

Designed by
FLUOR DANIEL
Job No. 636700 Chicago, Illinois 60606
Drawn: G.F. APPROVED
Designed: D.R./M.L. SCALE : NONE
Checked: D.R. DATE : 6-25-97

REVISIONS	
NAME	DATE

DECK DRAINAGE DETAILS

STATE OF ILLINOIS
DEPARTMENT OF TRANSPORTATION
SECTION 99-2 (K & HB-1-R)
FAU-80 OVER HOUBOLT RD. (FAU-032
SN 099-0301 E.B. AND 099-0302 W.
PHASE II
WILL COUNTY

MODEL: Drawing Views
FILE NAME: pw://transystems-pw.bentley.com:transyscorp-pw1-hosted/Documents/Projects_2018/CH401/401180022/02-TranSystems/CAD/62R27/Sheets/23-Structural/099-0301 & 099-0302 Existing/0990301EX-62R27-001-Existing Plans 22.dgn

TRANSYSTEMS

USER NAME = amkluver	DESIGNED -	REVISED -	
	CHECKED -	REVISED -	
PLOT SCALE = NTS	DRAWN -	REVISED -	
PLOT DATE = 6/23/2023	CHECKED -	REVISED -	

STATE OF ILLINOIS
DEPARTMENT OF TRANSPORTATION

EXISTING PLANS
STRUCTURE NO. 099-0301 & 099-0302

SHEET SE1-22 OF SE1-48 SHEETS

F.A.I. RTE.	SECTION	COUNTY	TOTAL SHEETS	SHEET NO.
I-80	FAI 80 21 STRUCTURE 6	WILL	898	580
		CONTRACT NO. 62R27		
	ILLINOIS	FED. AID PROJECT		

STATE OF ILLINOIS
DEPARTMENT OF TRANSPORTATION

99-2 (K&HB-1-R)

F.A.I. ROUTE NO.	SECTION	COUNTY	TOTAL SHEETS	SHEET NO.
0325	9	WILL	286	176

SHEET NO. S-22 OF SHEETS S-26

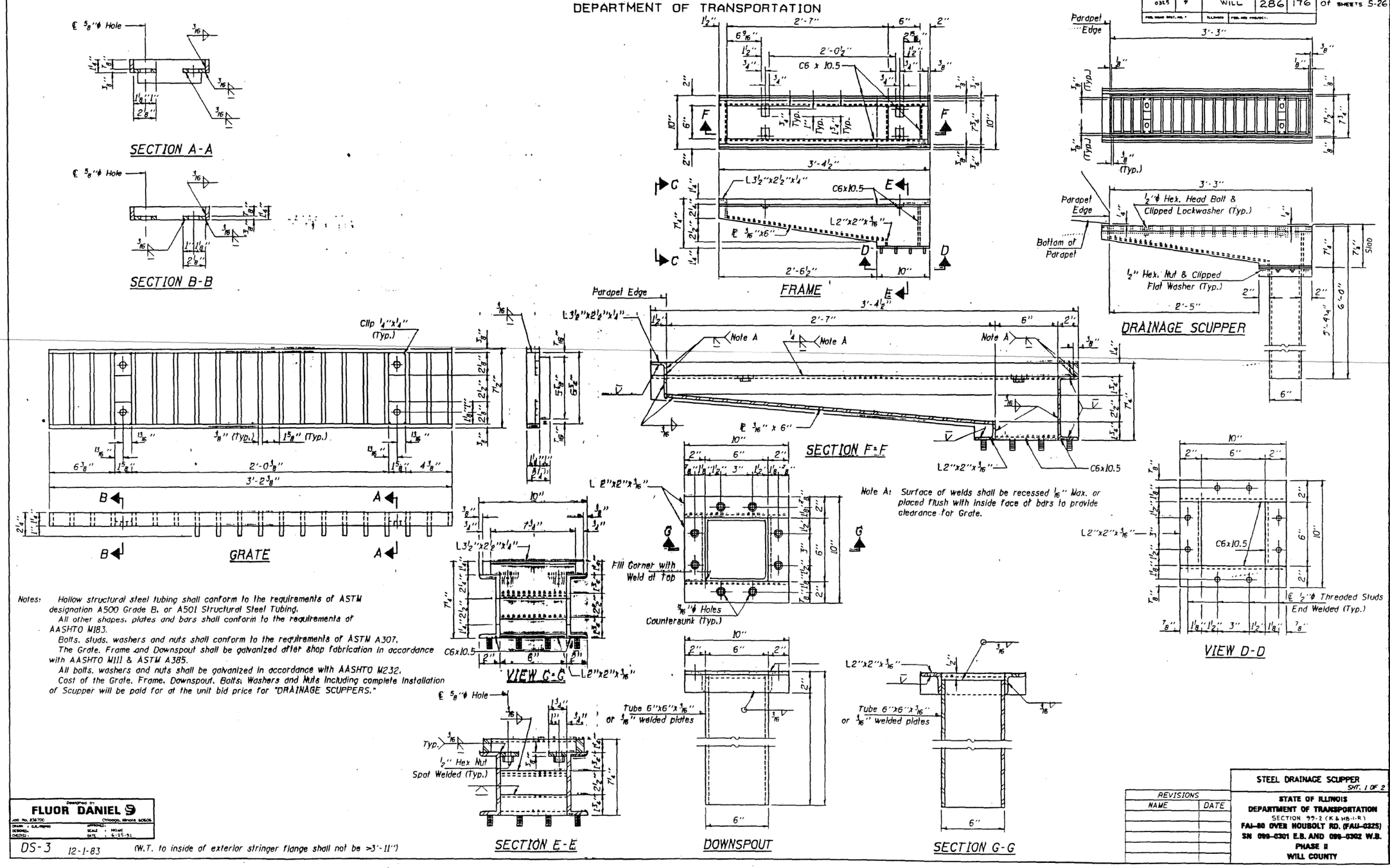

Notes: Hollow structural steel tubing shall conform to the requirements of ASTM designation A500 Grade B, or A501 Structural Steel Tubing.
All other shapes, plates and bars shall conform to the requirements of AASHTO M183.
Bolts, studs, washers and nuts shall conform to the requirements of ASTM A307.
The Grate, Frame and Downspout shall be galvanized after shop fabrication in accordance with AASHTO M111 & ASTM A385.
All bolts, washers and nuts shall be galvanized in accordance with AASHTO M232.
Cost of the Grate, Frame, Downspout, Bolts, Washers and Nuts including complete installation of Scupper will be paid for at the unit bid price for "DRAINAGE SCUPPERS."

Designed by FLUOR DANIEL
JOB No. 836700 CHICAGO, Illinois 60606
DRAWN : G.B./RPRO APPROVED:
DESIGNED: SCALE : NONE
CHECKED : DATE : 6-25-92

DS-3 12-1-83 (W.T. to inside of exterior stringer flange shall not be >3'-11")

REVISIONS	
NAME	DATE

STEEL DRAINAGE SCUPPER
SHT. 1 OF 2

STATE OF ILLINOIS
DEPARTMENT OF TRANSPORTATION
SECTION 99-2 (K & HB-1-R)
FAI-80 OVER HOUBOLT RD. (FAU-0325)
SN 099-0301 E.B. AND 099-0302 W.B.
PHASE II
WILL COUNTY

MODEL: Drawing Views
FILE NAME: pw://transystems-pw.bentley.com:transyscorp-pw1-hosted/Documents/Projects_2018/CH401/401180022/02-TranSystems/CAD/62R27/Sheets/23-Structural/099-0301 & 099-0302 Existing/0990301EX-62R27-001-Existing Plans 23.dgn

TRANSYSTEMS

USER NAME = amkluver	DESIGNED -	REVISED -	
	CHECKED -	REVISED -	
PLOT SCALE = NTS	DRAWN -	REVISED -	
PLOT DATE = 6/23/2023	CHECKED -	REVISED -	

STATE OF ILLINOIS
DEPARTMENT OF TRANSPORTATION

EXISTING PLANS
STRUCTURE NO. 099-0301 & 099-0302
SHEET SE1-23 OF SE1-48 SHEETS

F.A.I. RTE.	SECTION	COUNTY	TOTAL SHEETS	SHEET NO.
I-80	FAI 80 21 STRUCTURE 6	WILL	898	581

CONTRACT NO. 62R27
ILLINOIS FED. AID PROJECT

STATE OF ILLINOIS
DEPARTMENT OF TRANSPORTATION

#99-2 (K & HB-1-R)

F.A.I. ROUTE NO.	SECTION	COUNTY	TOTAL SHEETS	SHEET NO.
0325	*	WILL	286	177
FED. ROAD DIST. NO. 7		ILLINOIS	FED. AID PROJECT	

SHEET NO. S-23 OF SHEETS S-26

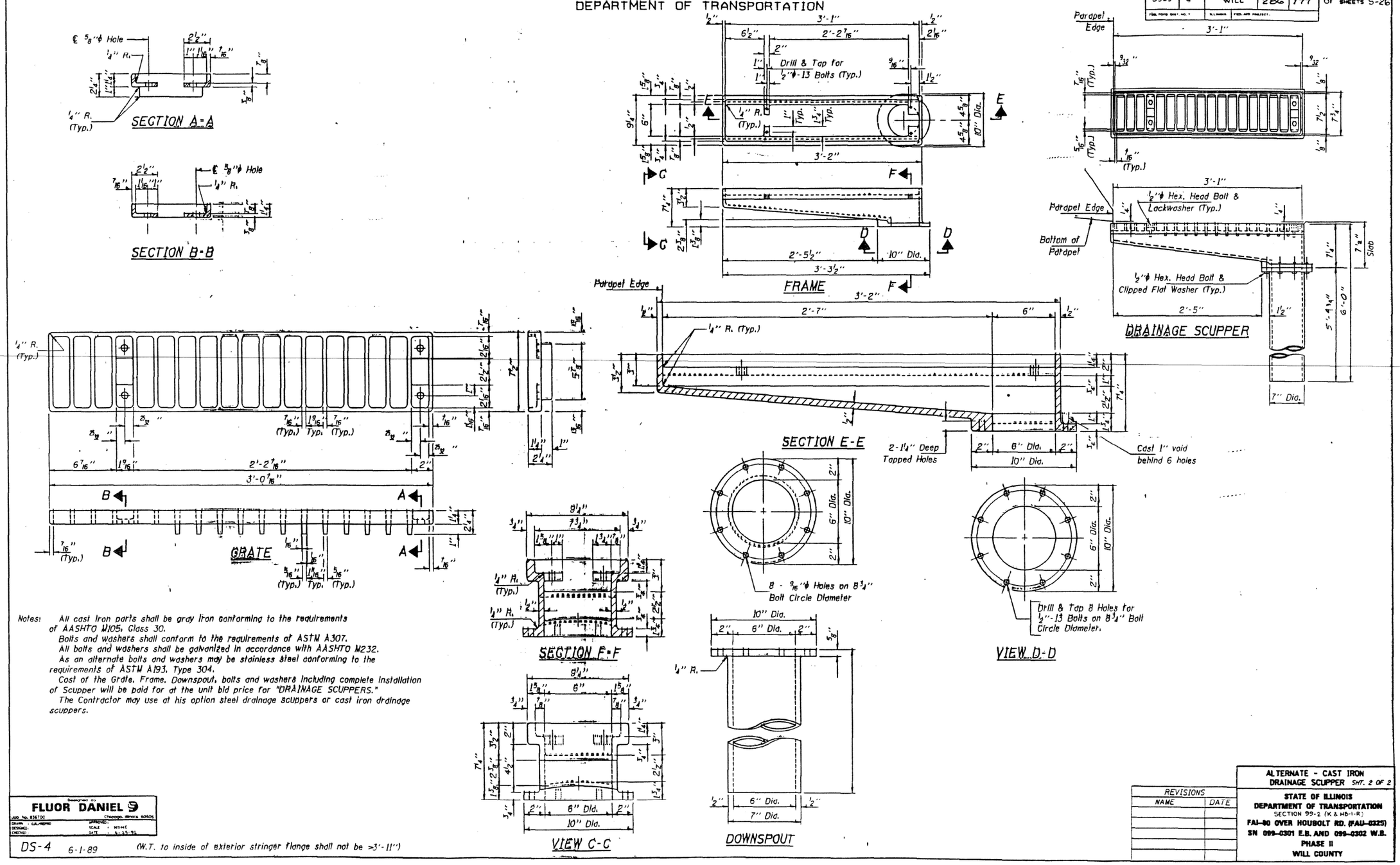

Notes: All cast iron parts shall be gray iron conforming to the requirements of AASHTO M105, Class 30.
Bolts and washers shall conform to the requirements of ASTM A307.
All bolts and washers shall be galvanized in accordance with AASHTO M232.
As an alternate bolts and washers may be stainless steel conforming to the requirements of ASTM A193, Type 304.
Cost of the Grate, Frame, Downspout, bolts and washers including complete installation of Scupper will be paid for at the unit bid price for "DRAINAGE SCUPPERS."
The Contractor may use at his option steel drainage scuppers or cast iron drainage scuppers.

Designed by
FLUOR DANIEL
Job No. 836700 Chicago, Illinois 60606
DRAWN : G.A./REPRO APPROVED:
DESIGNED: SCALE : NONE
CHECKED: DATE : 6-25-93

DS-4 6-1-89 (W.T. to inside of exterior stringer flange shall not be >3'-11")

REVISIONS	
NAME	DATE

ALTERNATE - CAST IRON DRAINAGE SCUPPER SHT. 2 OF 2

STATE OF ILLINOIS
DEPARTMENT OF TRANSPORTATION
SECTION 99-2 (K & HB-1-R)
FAI-80 OVER HOUBOLT RD. (FAU-0325)
SN 099-0301 E.B. AND 099-0302 W.B.
PHASE II
WILL COUNTY

MODEL: Drawing Views
FILE NAME: pw://transystems-pw.bentley.com:transyscorp-pw1-hosted/Documents/Projects_2018/CH401/401180022/02-TranSystems/CAD/62R27/Sheets/23-Structural/099-0301 & 099-0302 Existing/0990301EX-62R27-001-Existing Plans 24.dgn

TRANSYSTEMS

USER NAME = amkluver	DESIGNED -	REVISED -	
	CHECKED -	REVISED -	
PLOT SCALE = NTS	DRAWN -	REVISED -	
PLOT DATE = 6/23/2023	CHECKED -	REVISED -	

STATE OF ILLINOIS
DEPARTMENT OF TRANSPORTATION

EXISTING PLANS
STRUCTURE NO. 099-0301 & 099-0302
SHEET SE1-24 OF SE1-48 SHEETS

F.A.I. RTE.	SECTION	COUNTY	TOTAL SHEETS	SHEET NO.
I-80	FAI 80 21 STRUCTURE 6	WILL	898	582
		CONTRACT NO. 62R27		
	ILLINOIS	FED. AID PROJECT		

PROJECT I-80 Bridge Abutments at Houbolt Rd., Will County, IL
CLIENT Knight Architects, Engineers & Planners, Inc. Chicago, Illinois
BORING SB-1 DATE STARTED 7-19-91 DATE COMPLETED 7-19-91 JOB L-29,027

ELEVATIONS: GROUND SURFACE 595.1; END OF BORING 565.1
WATER TABLE: ▽ WHILE DRILLING 26.0 feet; ▽ AT END OF BORING 28.0 feet; ▼ 24 HOURS

Sta. 151+34, 63' Left from Centerline I-80

SAMPLE NO.	TYPE	N	WC	Q_u	δ DRY	DEPTH	ELEV.	SOIL DESCRIPTIONS
						0.3	594.8	2" Asphalt Pavement
1	SS	5 6 7	22.2	2.3				FILL - Dark brown CLAY, moist (A-6/A-7-6)
2	SS	7 9 11	22.1	3.2				
3	SS	7 10 12	25.8	2.8		6.0	589.1	Very tough black clayey TOPSOIL, moist (A-7-6)
4	SS	10 16 16	24.6	2.1		8.0	587.1	Very tough brown and gray CLAY, moist (A-6)
5	SS	10 10 13	18.6	2.2				
6	SS	19 20 23	16.7	4.0		13.0	582.1	Very tough to hard gray CLAY, moist (A-6)
7a		17	16.6	4.0				
7b	SS	24 30	-	-		17.0	578.1	
8	SS	11 23 24						Dense to very dense SAND and GRAVEL, damp to saturated (A-1-a)
9	SS	30 35 41						
10	SS	18 24 28						
11	SS	22 25 37				28.0	567.1	Hard gray silty LOAM, moist (A-4)
12	SS	30 34 40	8.4	4.0				

End of Boring at 30.0 feet

DRILL RIG NO 144

PROJECT I-80 Bridge Abutments at Houbolt Rd., Will County, IL
CLIENT Knight Architects, Engineers & Planners, Inc. Chicago, Illinois
BORING SB-2 DATE STARTED 7-18-91 DATE COMPLETED 7-18-91 JOB L-29,027

ELEVATIONS: GROUND SURFACE 595.7; END OF BORING 565.7
WATER TABLE: ▽ WHILE DRILLING 24.5 feet; ▽ AT END OF BORING 28.0 feet; ▼ 24 HOURS

Sta. 152+58, 27' Left from Centerline I-80

SAMPLE NO.	TYPE	N	WC	Q_u	δ DRY	DEPTH	ELEV.	SOIL DESCRIPTIONS
1	SS	3 4 5	22.3	2.0				FILL - Dark brown CLAY and TOPSOIL, moist (A-6/A-7-6)
2	SS	3 5 6	24.9	2.1		3.0	592.7	
3	SS	6 7 10	27.9	2.1				Very tough brown CLAY, moist (A-6/A-7-6)
4	SS	8 10 11	19.9	2.9				
5	SS	7 12 14	19.0	3.1				
6	SS	12 23 36				13.0	582.7	
7	SS	17 31 32						Dense to very dense brown SAND and GRAVEL, damp to wet (A-1-a)
8	SS	11 26 33						
9	SS	16 28 30						
10	SS	10 22 38						
11	SS	13 34 46				28.0	567.7	Very tough gray silty LOAM, moist (A-4)
12	SS	20 31 37	8.2	2.2				

End of Boring at 30.0 feet

DRILL RIG NO 53

PROJECT I-80 Bridge Abutments at Houbolt Rd., Will County, IL
CLIENT Knight Architects, Engineers & Planners, Inc. Chicago, Illinois
BORING SB-3 DATE STARTED 7-18-91 DATE COMPLETED 7-18-91 JOB L-29,027

ELEVATIONS: GROUND SURFACE 595.3; END OF BORING 565.3
WATER TABLE: ▽ WHILE DRILLING 22.5 feet; ▽ AT END OF BORING 23.0 feet; ▼ 24 HOURS

Sta. 151+14, 24' Right from Centerline I-80

SAMPLE NO.	TYPE	N	WC	Q_u	δ DRY	DEPTH	ELEV.	SOIL DESCRIPTIONS
						0.6	594.7	Black CLAY TOPSOIL
1	SS	5 7 8	24.1	3.75*				Very tough brown CLAY, moist (A-6/A-7-6)
2	SS	5 6 7	23.1	2.0*				
3	SS	4 7 11				5.5	589.8	Firm brown SAND, damp (A-1-b)
4	SS	5 7 15				11.0	584.3	Tough brown CLAY LOAM, moist (A-6)
5	SS	9 14 16	17.2	2.0*		13.0	582.3	
6	SS	13 15 32						Dense to very dense brown SAND and GRAVEL, damp to saturated (A-1-a)
7	SS	26 40 44						
8	SS	12 23 28						
9	SS	65 25 27						
10	SS	10 25						
11	SS	37 17 23	8.6			26.0	569.3	Very dense gray silty LOAM, damp (A-4)
12	SS	38 16 28	7.8					
		45						

End of Boring at 30.0 feet

DRILL RIG NO. 53

PROJECT I-80 Bridge Abutments at Houbolt Rd., Will County, IL
CLIENT Knight Architects, Engineers & Planners, Inc. Chicago, Illinois
BORING SB-4 DATE STARTED 7-17-91 DATE COMPLETED 7-17-91 JOB L-29,027

ELEVATIONS: GROUND SURFACE 595.3; END OF BORING 565.3
WATER TABLE: ▽ WHILE DRILLING 26.0 feet; ▽ AT END OF BORING 28.0 feet; ▼ 24 HOURS

Sta. 152+39, 63' Right from Centerline I-80

SAMPLE NO.	TYPE	N	WC	Q_u	δ DRY	DEPTH	ELEV.	SOIL DESCRIPTIONS
						0.6	594.7	FILL - Crushed Limestone and Cinders
1	SS	4 6 10	16.1	3.6	111.3			FILL - Dark brown and brown CLAY and TOPSOIL, moist (A-7-6)
2	SS	3 6 9	18.4	3.5	112.6			
3	SS	10 15 19	21.5	3.5		6.0	589.3	Very tough brown CLAY, moist (A-6)
4	SS	26 27 31				8.0	587.3	
5	SS	17 31 42						
6	SS	17 20 27						Dense to very dense brown SAND and GRAVEL, damp to saturated (A-1-a)
7	SS	20 30 30						
8	SS	21 27 29						
9	SS	23 26 31						
10	SS	16 31 33						
11	SS	10 14 20				28.0	567.3	
12	SS	17 21 25	7.5	3.2				Very tough gray silty LOAM, damp (A-4)

End of Boring at 30.0 feet

DRILL RIG NO 116

NOTE:-
See Sheet S-1 For Location of Boring Logs.

Designed by FLUOR DANIEL
Job No. 83617 Chicago, Illinois 60606
Drawn O.R./RAPED Approved -
Checked D.W. Scale -
Date 6-25-91

REVISIONS	
NAME	DATE

SOIL BORING LOGS

STATE OF ILLINOIS
DEPARTMENT OF TRANSPORTATION
SECTION 99-2 (K & HB-1-R)
FAI-80 OVER HOUBOLT RD. (FAU-0325)
SN 099-0301 E.B. AND 099-0302 W.B.
PHASE II
WILL COUNTY

MODEL: Drawing Views
FILE NAME: pw://transystems-pw.bentley.com:transyscorp-pw1-hosted/Documents/Projects_2018/CH401/401180022/02-TranSystems/CAD/62R27/Sheets/23-Structural/099-0301 & 099-0302 Existing/0990301EX-62R27-001-Existing Plans 25.dgn

TRANSYSTEMS	USER NAME = amkluver	DESIGNED -	REVISED -	STATE OF ILLINOIS DEPARTMENT OF TRANSPORTATION	EXISTING PLANS STRUCTURE NO. 099-0301 & 099-0302	F.A.I. RTE.	SECTION	COUNTY	TOTAL SHEETS	SHEET NO.
		CHECKED -	REVISED -			I-80	FAI 80 21 STRUCTURE 6	WILL	898	583
	PLOT SCALE = NTS	DRAWN -	REVISED -					CONTRACT NO. 62R27		
	PLOT DATE = 6/23/2023	CHECKED -	REVISED -		SHEET SE1-25 OF SE1-48 SHEETS		ILLINOIS	FED. AID PROJECT		

#62082 #126 6-15-01 FAI 80 WILL SEC. (99[1,2,3,4]+4-1) RS-7 I&R #126

126

99.9%
10-11-2001

F.A.I. RTE.	SECTION	COUNTY	TOTAL SHEETS	SHEET NO.
80	*	WILL	82	1
		ILLINOIS		

* 99 (1,2,3,4 & 4-1) RS-7

0-91-507-00

FOR INDEX OF SHEETS, SEE SHEET NO. 2

STATE OF ILLINOIS
DEPARTMENT OF TRANSPORTATION
DIVISION OF HIGHWAYS

PROPOSED HIGHWAY PLANS

F.A.I. ROUTE 80 (INTERSTATE 80)
GRUNDY COUNTY LINE TO ROWELL STREET
RESURFACING (MAINT.) & BRIDGE REPAIRS
SECTION (99 [1,2,3,4] & 4-1) RS-7
C-91-507-00
WILL COUNTY

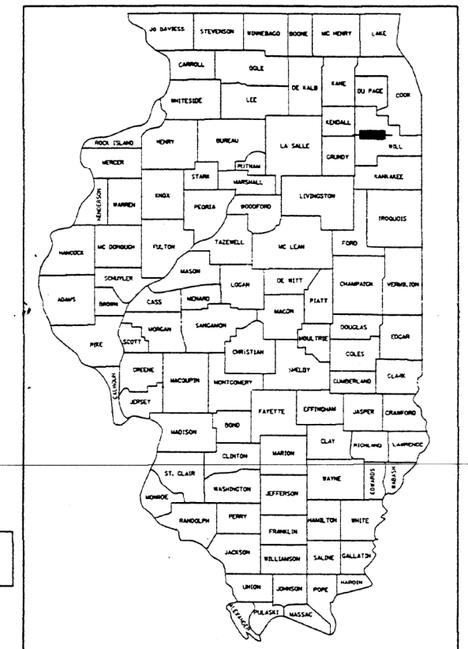

LOCATION OF SECTION INDICATED THUS:-

STA. EQ.:
STA. 1971+00.00 BK =
STA. 85+74.14 AH

STA. EQ.:
STA. 276+69.36 BK =
STA. 277+97.90 AH

STA. EQ.:
STA. 343+96.07 BK =
STA. 343+45.06 AH

END RESURFACING
STA. 379+50.00

END IMPROVEMENT
STA. 456+00.00

BEGIN IMPROVEMENT
& RESURFACING
STA. 1791+65.00

THIS IMPROVEMENT IS LOCATED WITHIN
ROCKDALE AND JOLIET

END RUMBLE STRIP
INSTALLATION
STA. 895+00

BEGIN RUMBLE STRIP
INSTALLATION
STA. 740+61

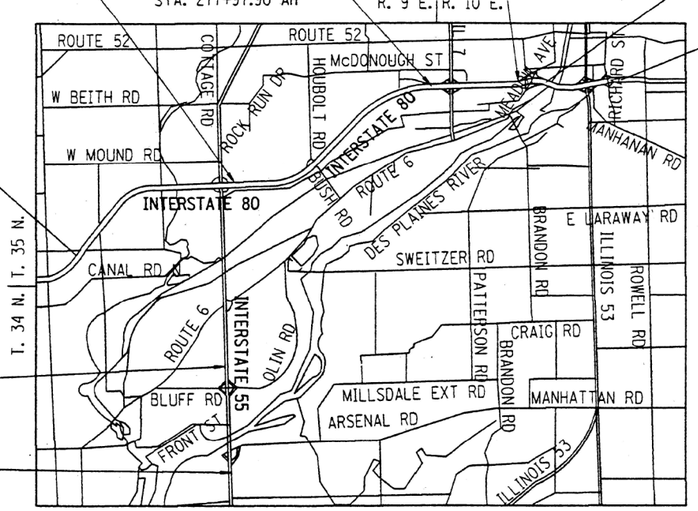

LOCATION MAP

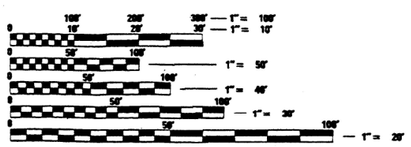

FULL SIZE PLANS HAVE BEEN PREPARED USING STANDARD ENGINEERING SCALES. REDUCED SIZED PLANS WILL NOT CONFORM TO STANDARD SCALES. IN MAKING MEASUREMENTS ON REDUCED PLANS, THE ABOVE SCALES MAY BE USED.

J.U.L.I.E.
JOINT UTILITY LOCATION INFORMATION FOR EXCAVATION
1-800-892-0123

TRAFFIC DATA
INTERSTATE 80
WEST OF LARKIN AVE.
1999 ADT = 35,000
SPEED LIMIT: 55 MPH

TRAFFIC DATA
INTERSTATE 80
EAST OF LARKIN AVE.
1999 ADT = 74,500
SPEED LIMIT: 45-55 MPH

GROSS LENGTH OF SECTION = 47,342.55LF = 8.966 MILES
NET LENGTH OF SECTION = 44,479 LF = 8.424 MILES

MAP SCALE 1"=6000' 0 6000' 12,000' — 1" = 6000'

STATION EQUATIONS
1971+00 BK = 85+74.14 AH
276+69.36 BK = 277+97.90 AH
342+96.07 BK = 343+45.06 AH

PATRICK ENGINEERING, INC.
TED W. LACHUS, P.E.
062-040941

TED WILLIAM LACHUS
062-040941
REGISTERED PROFESSIONAL ENGINEER OF ILLINOIS

EXP 11-30-01

4-10-01
DATE:

STATE OF ILLINOIS
DEPARTMENT OF TRANSPORTATION
DIVISION OF HIGHWAYS

SUBMITTED April 12 2001
DISTRICT ENGINEER

May 11 2001
ENGINEER OF DESIGN AND ENVIRONMENT

May 11 2001
DIRECTOR, DIVISION OF HIGHWAYS

PRINTED BY THE AUTHORITY
OF THE STATE OF ILLINOIS

1-275

CONTRACT NO. 62082 099-0301 (WB) 0302 (EB)

099-0301 & -0302

DISTRICT 1 - DESIGN AND PLAN PREPARATION ENGINEER : K. ENG / M. GOMEZ (847) 705 - 4432

MODEL: Drawing Views
FILE NAME: pw://transystems-pw.bentley.com:transyscorp-pw1-hosted/Documents/Projects_2018/CH401/401180022/02-TranSystems/CAD/62R27/Sheets/23-Structural/099-0301 & 099-0302 Existing/0990301EX-62R27-001-Existing Plans 26.dgn

TRANSYSTEMS

USER NAME = amkluver	DESIGNED -	REVISED -	
	CHECKED -	REVISED -	
PLOT SCALE = NTS	DRAWN -	REVISED -	
PLOT DATE = 6/23/2023	CHECKED -	REVISED -	

STATE OF ILLINOIS
DEPARTMENT OF TRANSPORTATION

EXISTING PLANS
STRUCTURE NO. 099-0301 & 099-0302
SHEET SE1-26 OF SE1-48 SHEETS

F.A.I. RTE.	SECTION	COUNTY	TOTAL SHEETS	SHEET NO.
I-80	FAI 80 21 STRUCTURE 6	WILL	898	584
		CONTRACT NO. 62R27		
		ILLINOIS	FED. AID PROJECT	

F.A.I. RTE.	SECTION	COUNTY	TOTAL SHEETS	SHEET NO.
80	*	WILL	82	53
STA.		TO STA.		
FED. ROAD DIST. NO.	ILLINOIS	FED. AID PROJECT		

Sheet S1 of S1

* 99 (1, 2, 3, 4 & 4-1)RS-7

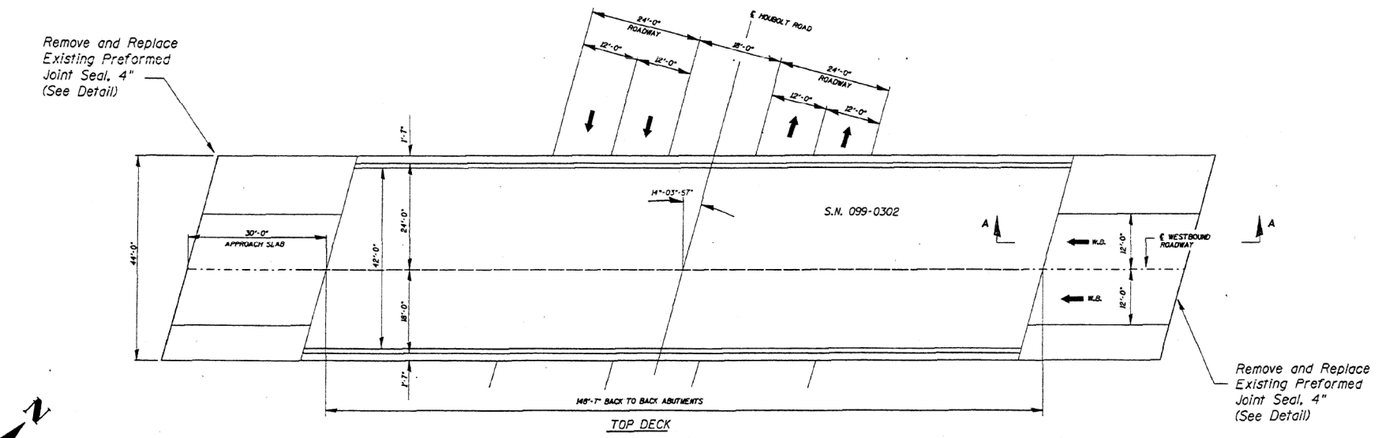

TOP DECK

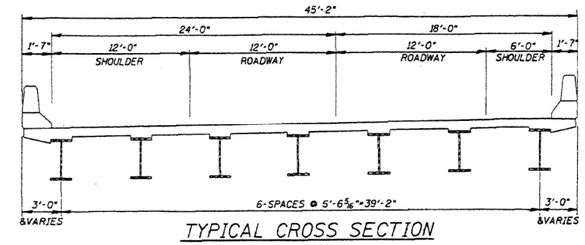

TYPICAL CROSS SECTION

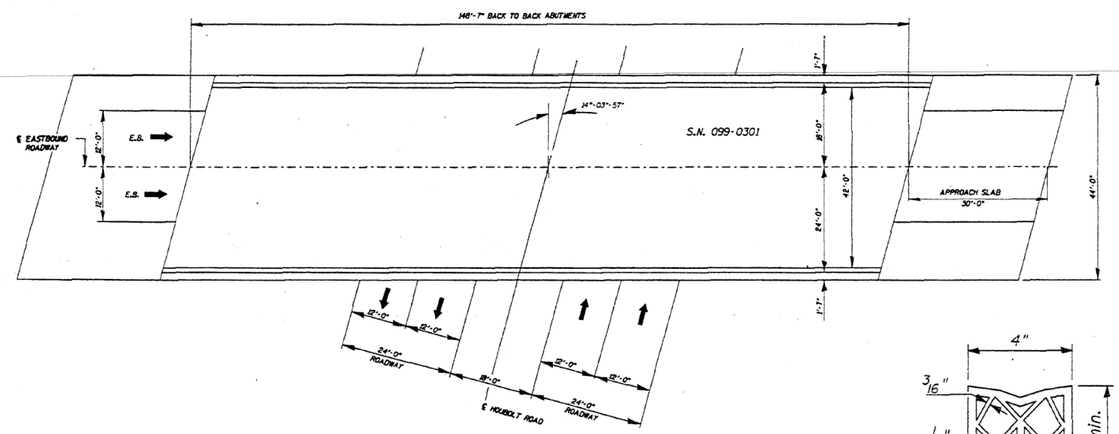

TOP DECK

GENERAL NOTES

PLAN DIMENSIONS AND DETAILS RELATIVE TO EXISTING STRUCTURES HAVE BEEN TAKEN FROM EXISTING PLANS AND ARE SUBJECT TO NOMINAL CONSTRUCTION VARIATIONS. IT SHALL BE THE CONTRACTOR'S RESPONSIBILITY TO VERIFY SUCH DIMENSION AND DETAILS IN THE FIELD AND MAKE NECESSARY APPROVED ADJUSTMENTS PRIOR TO CONSTRUCTION OR ORDERING OF MATERIALS. SUCH VARIATION SHALL NOT BE CAUSE FOR ADDITIONAL COMPENSATION FOR A CHANGE IN THE SCOPE. HOWEVER, THE CONTRACTOR WILL BE PAID FOR THE QUANTITY ACTUALLY FURNISHED AT THE UNIT BID PRICE OR THE WORK.

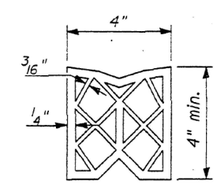

PREFORMED JOINT SEAL

TOTAL BILL OF MATERIALS - BRIDGE

ITEM	UNIT	QUANTITY
Preformed Joint Seal, 4"	Foot	90.7

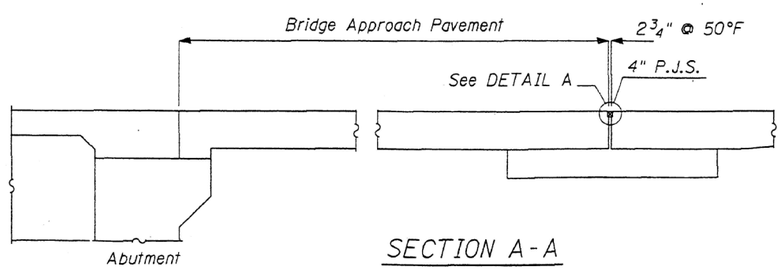

SECTION A-A

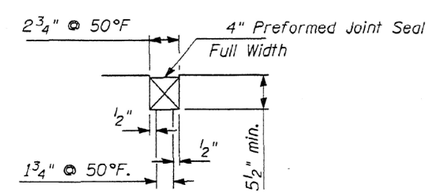

DETAIL A

REVISIONS	
NAME	DATE

ILLINOIS DEPARTMENT OF TRANSPORTATION

INTERSTATE RTE. 80 OVER HOUBOLT ROAD
S.N. 099-0302 (EASTBOUND)
S.N. 099-0301 (WESTBOUND)

SCALE: NONE — DRAWN BY MVT
DATE 4/9/01 — CHECKED BY TMS

c:\projects\structl\i-80-01.prf: 07:11:54 04/09/2001

Mon Apr 9 07:15:07 2001
c:\projects\structl\i-80-01.m32 LV:1-13,15-63

MODEL: Drawing Views
FILE NAME: pw://transystems-pw.bentley.com:transyscorp-pw1-hosted/Documents/Projects_2018/CH401/401180022/02-TranSystems/CAD/62R27/Sheets/23-Structural/099-0301 & 099-0302 Existing/0990301EX-62R27-001-Existing Plans 27.dgn

TRANSYSTEMS

USER NAME = amkluver	DESIGNED -	REVISED -	
	CHECKED -	REVISED -	
PLOT SCALE = NTS	DRAWN -	REVISED -	
PLOT DATE = 6/23/2023	CHECKED -	REVISED -	

STATE OF ILLINOIS
DEPARTMENT OF TRANSPORTATION

EXISTING PLANS
STRUCTURE NO. 099-0301 & 099-0302

SHEET SE1-27 OF SE1-48 SHEETS

F.A.I. RTE.	SECTION	COUNTY	TOTAL SHEETS	SHEET NO.
I-80	FAI 80 21 STRUCTURE 6	WILL	898	585
		CONTRACT NO. 62R27		
	ILLINOIS	FED. AID PROJECT		

FOR INDEX OF SHEETS, SEE SHEET NO. 2

F.A.U RTE.	SECTION	COUNTY	TOTAL SHEETS	SHEET NO.
325	16-00503-00-PV	WILL	782	1
		ILLINOIS	CONTRACT NO. XXX	

CITY OF JOLIET

DEPARTMENT OF PUBLIC WORKS

PROPOSED HIGHWAY PLANS

FAU ROUTE 325: HOUBOLT ROAD/HOLLYWOOD ROAD
US ROUTE 6 (CHANNAHON ROAD) TO NORTH OF INTERSTATE 80
ROADWAY RECONSTRUCTION AND ADDITIONAL LANES, INTERCHANGE RECONSTRUCTION, TRAFFIC SIGNAL MODERNIZATION, INTERCONNECT AND LIGHTING
SECTION 16–00503–00PV
WILL COUNTY

DESIGN DESIGNATION:
3215(40) OTHER PRINCIPAL ARTERIAL 98.10 (PCC-20)

DESIGN YEAR:
2040

TRAFFIC DATA
HOLLYWOOD ROAD / HOUBOLT ROAD (SOUTH OF MOUND ROAD)
POSTED SPEED: 40 MPH
DESIGN SPEED: 45 MPH
ADT: 10,300 (EXISTING) 39,800 (PROPOSED)

HOLLYWOOD ROAD / HOUBOLT ROAD (NORTH OF MOUND ROAD)
POSTED SPEED: 30 MPH
DESIGN SPEED: 35 MPH
ADT: 24,700 (EXISTING) 43,900 (PROPOSED)

US ROUTE 6
POSTED SPEED: 50 MPH
DESIGN SPEED: 55 MPH
ADT: 12,600 (EXISTING) 15,800 (PROPOSED)

MOUND ROAD
POSTED SPEED: 35 MPH
DESIGN SPEED: 40 MPH
ADT: 2,700 (EXISTING) 2,800 (PROPOSED)

INTERSTATE 80 (RAMPS)
RAMP A
POSTED SPEED: VARIES
DESIGN SPEED: VARIES
ADT: 6,900 (EXISTING) 17,400 (PROPOSED)

RAMP B
POSTED SPEED: VARIES
DESIGN SPEED: VARIES
ADT: 6,200 (EXISTING) 12,300 (PROPOSED)

RAMP C
POSTED SPEED: VARIES
DESIGN SPEED: VARIES
ADT: 5,400 (EXISTING) 11,000 (PROPOSED)

RAMP D
POSTED SPEED: VARIES
DESIGN SPEED: VARIES
ADT: 6,900 (EXISTING) 17,200 (PROPOSED)

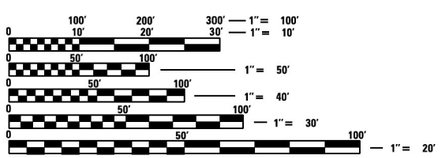

FULL SIZE PLANS HAVE BEEN PREPARED USING STANDARD ENGINEERING SCALES. REDUCED SIZED PLANS WILL NOT CONFORM TO STANDARD SCALES. IN MAKING MEASUREMENTS ON REDUCED PLANS, THE ABOVE SCALES MAY BE USED.

J.U.L.I.E.
JOINT UTILITY LOCATION INFORMATION FOR EXCAVATORS
1–800–892–0123
OR 811

PROJECT MANAGER:
RUSSELL A. LUBASH, P.E. (815)724–4200

CONTRACT NO. 2584–1021

R. CHRISTOPHER BONUS — 062-050801 — LICENSED PROFESSIONAL ENGINEER OF STATE OF ILLINOIS
TRANSYSTEMS
R. CHRISTOPHER BONUS, P.E.
NO. 062-050801
EXP. DATE 11/30/21
SHEET RANGE 1-222, 313-367, 377-389, 620-782

WILLIAM J. COLLETTI — 081-008091 — LICENSED STRUCTURAL ENGINEER OF STATE OF ILLINOIS
TRANSYSTEMS
WILLIAM J. COLLETTI, P.E.
NO. 081-008091
EXP. DATE 11/30/22
SHEET RANGE 368-376

MARC A. GRIGAS — 062-060836 — LICENSED PROFESSIONAL ENGINEER OF STATE OF ILLINOIS
STRAND ASSOCIATES, INC
MARC ANTHONY GRIGAS, P.E.
NO. 062-060836
EXP. DATE 11/30/21
SHEET RANGE 223-293

GAURAV RAI — 062-065565 — LICENSED PROFESSIONAL ENGINEER OF STATE OF ILLINOIS
TRANSYSTEMS
GAURAV RAI, P.E.
NO. 062-065565
EXP. DATE 11/30/21
SHEET RANGE 390-477

NATHAN D. RICK — 081-007039 — LICENSED STRUCTURAL ENGINEER OF STATE OF ILLINOIS
STRAND ASSOCIATES, INC
NATHAN D RICK, S.E. P.E.
NO. 081-007039
EXP. DATE 11/30/22
SHEET RANGE 525-542

STEPHAN R. FREESE — 062-055709 — LICENSED PROFESSIONAL ENGINEER OF STATE OF ILLINOIS
TRANSYSTEMS
STEPHAN R. FREESE, P.E.
NO. 062-055709
EXP. DATE 11/30/21
SHEET RANGE 478-524

ANTHONY J. STANDISH — 081-005819 — LICENSED STRUCTURAL ENGINEER OF STATE OF ILLINOIS
STRAND ASSOCIATES, INC
ANTHONY J. STANDISH, S.E. P.E.
NO. 081-005819
EXP. DATE 11/30/21
SHEET RANGE 543-619

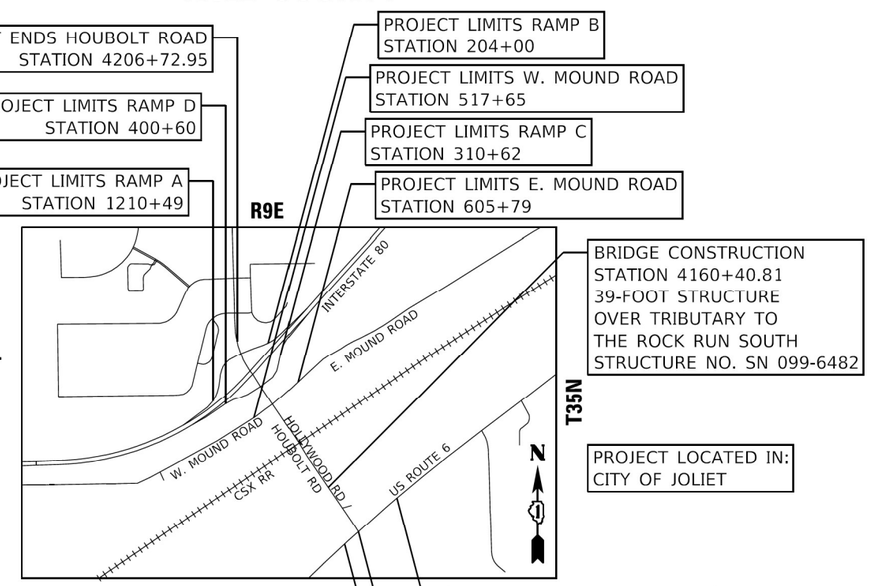

LOCATION MAP
NOT TO SCALE

PROJECT LENGTH (GROSS/NET)
TOTAL LENGTH = 5,622.12 FEET (1.06 MILES)

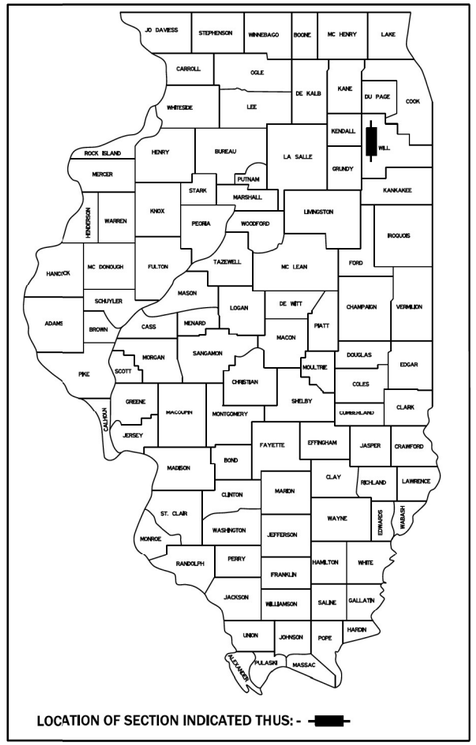

CITY OF JOLIET
APPROVED JUNE 30 ,2021
GREGORY P. RUDDY, P.E.
CITY OF JOLIET, DIRECTOR OF PUBLIC WORKS

CITY OF JOLIET
DEPARTMENT OF PUBLIC WORKS
150 W. JEFFERSON STREET
JOLIET, ILLINOIS 60431
(815)–724–4200

Benchmark Information: Chiseled square on the top westerly side of concrete foundation for cantilevered traffic signal at the southwest quadrant of Houbolt Road and I-80 West Bound on ramp. Elev. 588.313.

Existing structure: None. Adjacent existing structure SN099-0301 and SN099-0302, I-80 eastbound and westbound respectively. Parallel 146'-0" simple span 60" steel plate girder bridges on integral abutments with 1:2 slope walls.

Traffic control: Staged.

Salvage: None.

LEGEND

(#) Designates front face of wall Control Point. See Wall Geometry Control Table. Work this legend with table on sheet 2 of 19

P# Panel Number

Note: Offsets are measured from Proposed SB PGL Houbolt Road to front face of wall.

INDEX OF SHEETS

SCOPE OF WORK

1. Remove portion of Slope Wall
2. Support Remaining Slope Wall and Embankment for Wall Construction
3. Construct Micropile Wall and Concrete Facing
4. Construct Driven Soldier Pile and Concrete Facing
5. Construct Anchorage Slab
6. Construct Constant Slope Barrier

ANTICIPATED CONSTRUCTION SEQUENCE

1. Remove Slope Wall to limits shown while supporting remaining slope wall and embankment.
2. Install Micropile and Driven Soldier Pile Walls
3. Install Untreated Timber Lagging, Geocomposite Wall Drain, and Underdrain
4. Construct Concrete Facing
5. Install Concrete Gutter
6. Construct Anchorage Slab and Constant Slope Barrier

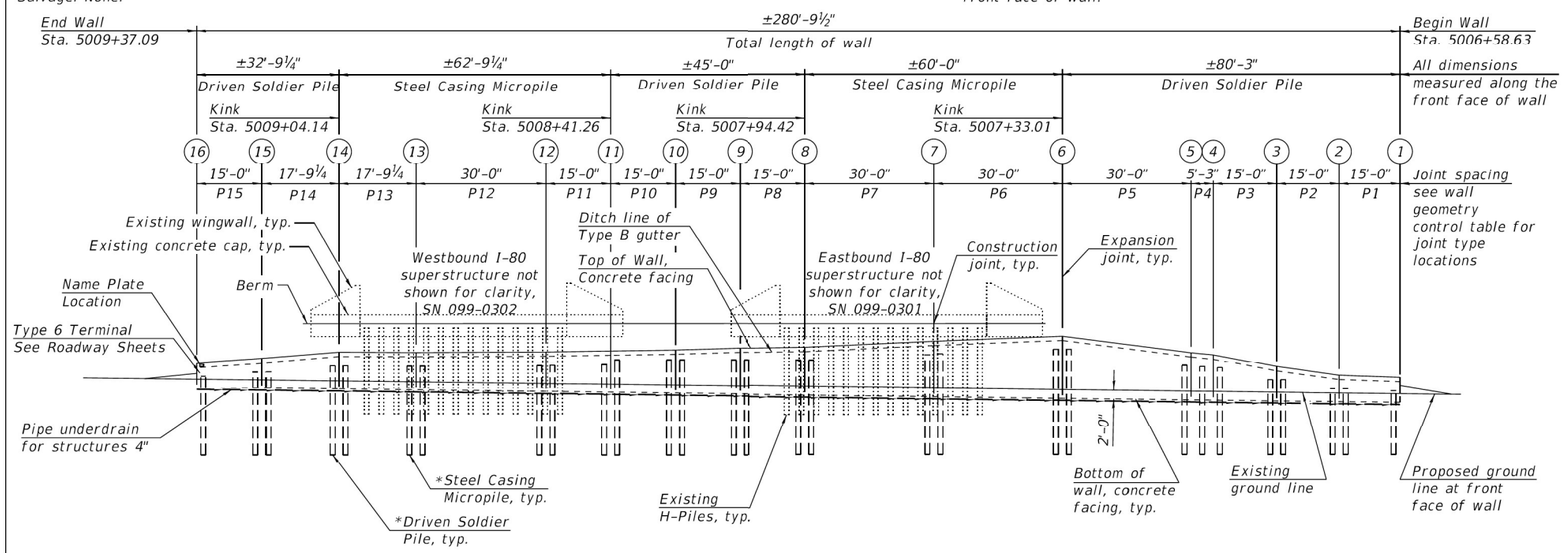

*Driven Soldier Pile and Steel Casing Micropile details shown on sheets 4 and 5 of 16.

ELEVATION

(Looking east at front face of wall)

CURVE DDI SB7

P.I. Sta. = 5006+35.90
Δ = 26°10'55" (LT)
D = 19°05'55"
R = 300.00'
T =69.76'
L = 137.09'
E = 8.00'
P.C. Sta. = 5005+66.14
P.T. Sta. = 5007+03.22

CURVE DDI SB8

P.I. Sta. = 5007+74.75
Δ = 8°10'55" (RT)
D = 5°43'46"
R = 1,000.00'
T =71.52'
L = 142.80'
E = 2.55'
P.C. Sta. = 5007+03.22
P.T. Sta. = 5008+46.02

CURVE DDI SB11

P.I. Sta. = 5010+30.62
Δ = 11°28'45" (RT)
D = 5°43'46"
R = 1,000.00'
T = 100.51'
L = 200.35'
E = 5.04'
P.C. Sta. = 5009+30.11
P.T. Sta. = 5011+30.46

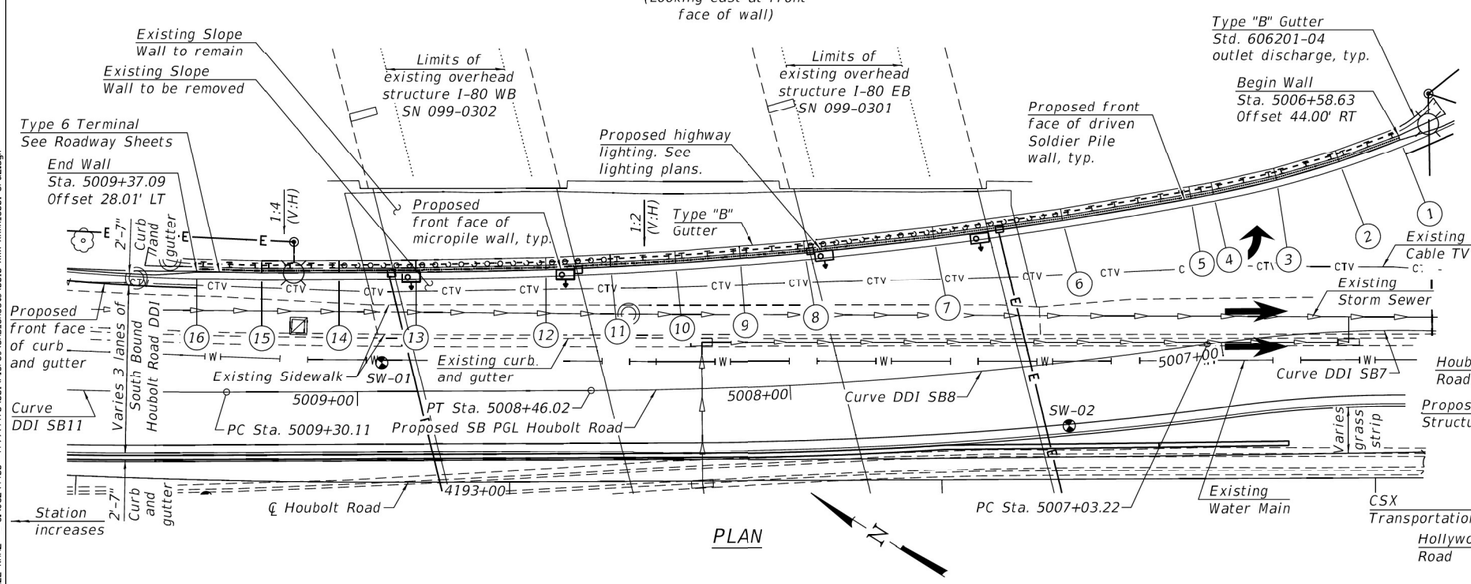

PLAN

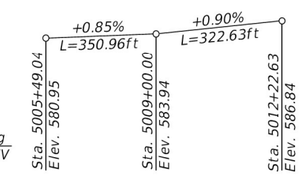

PROFILE GRADE

(along ℄ proposed DDI SB Houbolt Rd)

DESIGN STRESSES

f'c = 3,500 psi (Concrete facing)
f'c = 5,000 psi (Grout)
fy = 60,000 psi (Reinforcement)
fy = 36,000 psi (Structural Steel) AASHTO M270 Gr. 36
fy = 50,000 psi (Soldier Pile) AASHTO M270 Gr. 50
fy = 80,000 psi (Steel Casing-Micro Pile)

DESIGN SPECIFICATIONS

2020 AASHTO LRFD Bridge Design Specifications, 9th Edition

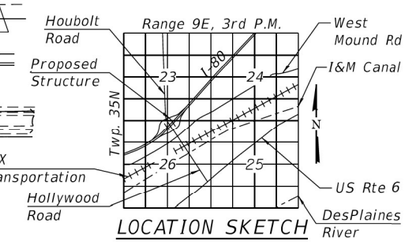

LOCATION SKETCH

GENERAL PLAN AND ELEVATION
WALL AT HOUBOLT ROAD AND I-80
F.A.U. 325 SECTION 16-00503-00-PV
WILL COUNTY
STA. 5006+58.63 TO STA. 5009+37.09
STRUCTURE NO. 099-6301

FILE NAME = S:\JOL\14400--449\14470\001\Micro\CAD_Sheets\0010-XXX-XXX_6001-GP&E.dgn

STRAND ASSOCIATES® 1170 SOUTH HOUBOLT ROAD JOLIET, ILLINOIS 60431 (815) 744-4200 IDFPR NO. 184-001273	USER NAME = AlexSc	DESIGNED - BRL	REVISED -	STATE OF ILLINOIS DEPARTMENT OF TRANSPORTATION	GENERAL PLAN AND ELEVATION STRUCTURE NO. 099-6301
		CHECKED - AJS	REVISED -		
	PLOT SCALE =	DRAWN - BJF	REVISED -		
	PLOT DATE = 7/9/2021	CHECKED - KRB	REVISED -		SHEET NO. 1 OF 16 SHEETS

F.A.U. RTE.	SECTION	COUNTY	TOTAL SHEETS	SHEET NO.
325	16-00503-00-PV	WILL	782	588
		CONTRACT NO. 2584-1021		
		ILLINOIS FED. AID PROJECT		

MODEL: Drawing Views
FILE NAME: pw://transystems-pw.bentley.com:transyscorp-pw1-hosted/Documents/Projects_2018/CH401/401180022/02-TranSystems/CAD/62R27/Sheets/23-Structural/099-0301 & 099-0302 Existing/0990301EX-62R27-001-Existing Plans 29.dgn

TRANSYSTEMS	USER NAME = amkluver	DESIGNED -	REVISED -	STATE OF ILLINOIS DEPARTMENT OF TRANSPORTATION	EXISTING PLANS STRUCTURE NO. 099-0301 & 099-0302
		CHECKED -	REVISED -		
	PLOT SCALE = NTS	DRAWN -	REVISED -		
	PLOT DATE = 6/23/2023	CHECKED -	REVISED -		SHEET SE1-29 OF SE1-48 SHEETS

F.A.I. RTE.	SECTION	COUNTY	TOTAL SHEETS	SHEET NO.
I-80	FAI 80 21 STRUCTURE 6	WILL	898	587
		CONTRACT NO. 62R27		
		ILLINOIS FED. AID PROJECT		

GENERAL NOTES

1. Calculated weight of Structural Steel AASHTO M270 Gr. 36 = 40,930 Pounds. (See Note 7 Sheet 8.)
   Calculated weight of Structural Steel Connections = 8,740 Pounds. (See Note 8 Sheet 8.)
   Total, paid as Furnishing and Erecting Structural Steel = 49,670 Pounds.
2. Structural steel plates may be AASHTO M270 Grade 36.
3. No field welding is permitted except as specified in the contract documents.
4. Reinforcement bars designated (E) shall be epoxy coated.
5. Plan dimensions and details relative to existing plans are subject to nominal construction variations. The Contractor shall field verify existing dimensions and details affecting new construction and make necessary approved adjustments prior to construction or ordering of materials. Such variations shall not be cause for additional compensation for a change in scope of the work, however, the Contractor will be paid for the quantity actually furnished at the unit price bid for the work.
6. Concrete Sealer shall be applied to the concrete facing. Concrete Sealer limits shall extend from the bottom of concrete facing at the front face to the top and return over the top and down 1'-6" on the rear end.
7. Backfill limits of excavation within 2'-0" of structures and beneath roadway with compacted Granular Backfill for Structures, paid as Granular Backfill for Structures. Remaining backfill outside those limits shall be provided as directed by Engineer and according to Section 502 of the Standard Specifications. Remaining backfill associated with Structure Excavtion shall be included in the cost of Structure Excavation.
8. The Contractor is responsible for the design and performance of the lagging using no less than a 3 in. nominal rough-sawn thickness and timber with a minimum allowable bending stress of 1000 psi.
9. The Concrete Facing shall be poured before all final grading work behind and above the wall are complete.
10. Any removal of the existing slope wall or overexcavation and backfill beyond limits noted to complete grading or installation of the proposed retaining wall is included in the cost of Slope Wall Removal and Micropiles, Lateral. Removal shall be approved by the engineer.

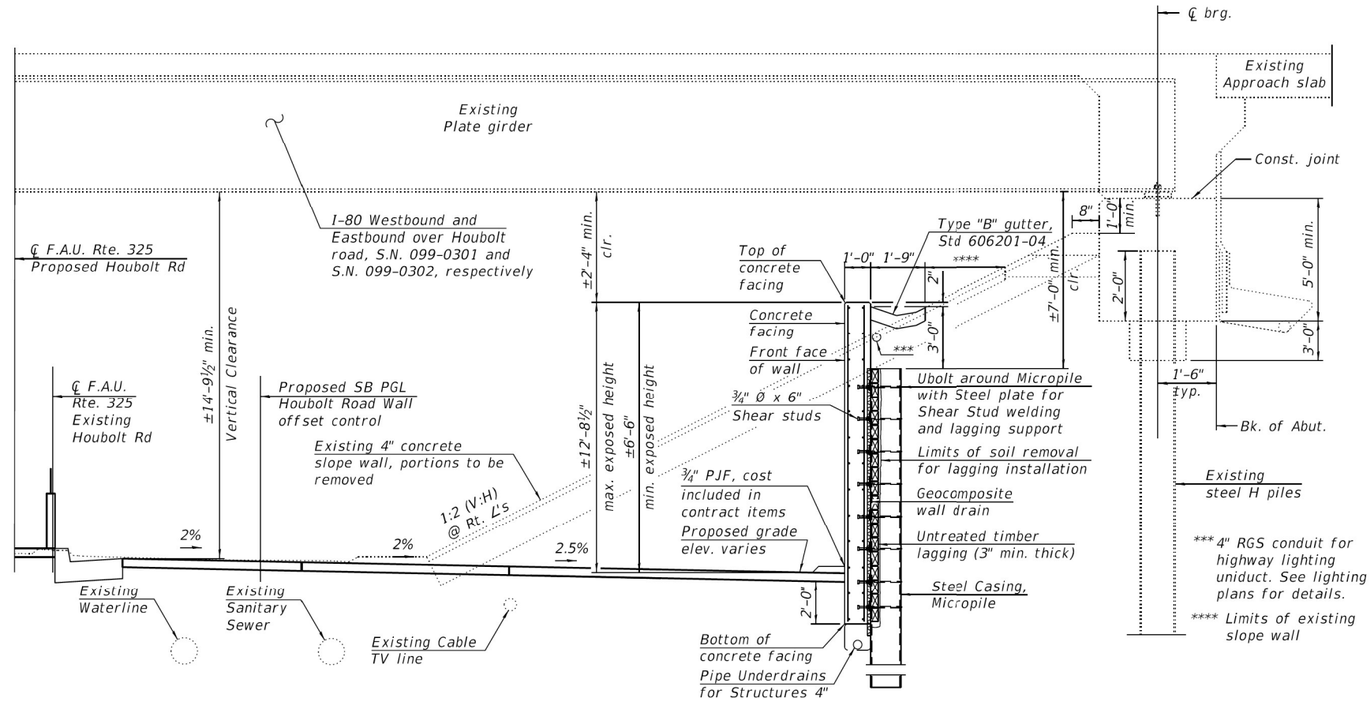

TYPICAL MICROPILE WALL SECTION
(Looking North)

LATERAL DESIGN LOADS	
Elevation	Equivalent Fluid Pressure
694.00 to 585.00	49.2 psf
585.00 to 567.00	39.2 psf

Notes:
1. Lateral design loads are reported as service Equivalent Fluid Pressure loads.
2. Maximum allowable deflection at top of pile is 1 inch under lateral design loads.

STATION 5006+58 TO 5009+37
BUILT 202X BY
ILLINOIS DEPARTMENT OF TRANSPORTATION
FAU 325 SECTION
16-00503-00-PV
STRUCTURE NO. 099-6301

NAME PLATE
See Std. 515001

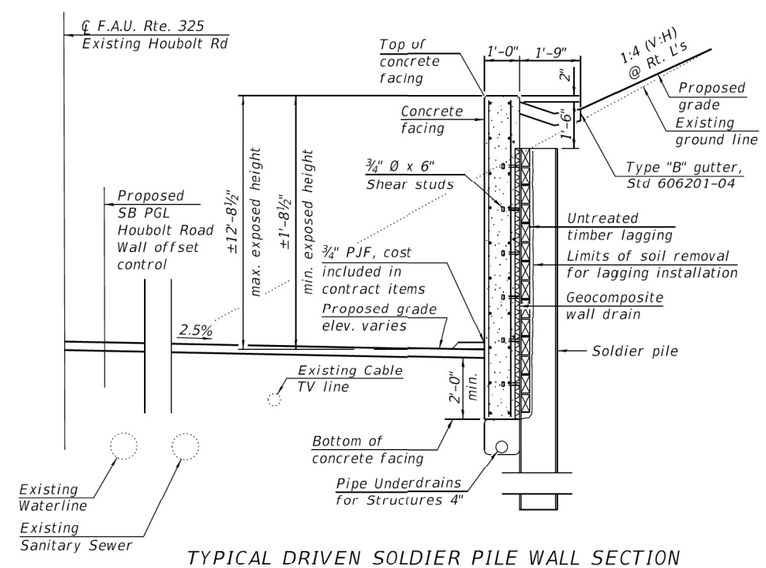

TYPICAL DRIVEN SOLDIER PILE WALL SECTION
(Looking North)

WALL GEOMETRY CONTROL TABLE - S.N. 099-6301								
Wall Location	Wall Type	Control Point	Station Alignment	** Offset RT, ft	Elevation Top of Concrete Facing, ft	Bottom of Concrete Facing Elev.	Panel Point Spacing, ft	Joint, E=Exp., C=Constr.
Begin Wall	Driven Soldier Pile	1	5006+58.63	44.00	581.71	578.00	15.00	-
Kink	Driven Soldier Pile	2	5006+71.08	39.15	584.71	579.00	15.00	C
Kink	Driven Soldier Pile	3	5006+84.1	35.81	586.71	579.00	15.00	C
Kink	Driven Soldier Pile	4	5006+97.44	34.07	589.46	579.00	5.25	C
Kink	Driven Soldier Pile	5	5007+02.16	33.83	589.96	579.00	30.00	C
Kink	Micro Pile	6	5007+33.01	32.68	593.71	579.00	30.00	E
Kink	Micro Pile	7	5007+63.98	31.54	592.46	580.00	30.00	C
Kink	Driven Soldier Pile	8	5007+94.92	30.38	590.96	580.00	15.00	E
Kink	Driven Soldier Pile	9	5008+10.38	29.90	590.71	580.00	15.00	C
Kink	Driven Soldier Pile	10	5008+25.82	29.19	590.21	580.00	15.00	C
Kink	Micro Pile	11	5008+41.26	28.70	589.96	580.00	15.00	E
Kink	Micro Pile	12	5008+56.38	28.04	589.71	580.00	30.00	C
Kink	Micro Pile	13	5008+86.38	27.58	589.46	581.00	17.77	C
Kink	Driven Soldier Pile	14	5009+04.14	27.58	589.46	581.00	17.77	E
Kink	Driven Soldier Pile	15	5009+21.91	27.58	587.96	581.00	15.00	C
End Wall		16	5009+37.09	28.01	585.18	0.00	*280.79	-

* Total wall length.
** Offset measured from SB PGL.

TOTAL BILL OF MATERIAL

ITEM	UNIT	TOTAL
Slope Wall Removal	Sq Yd	268
Structure Excavation	Cu Yd	279
Concrete Structures	Cu Yd	146
Furnishing and Erecting Structural Steel	Pounds	49,670
Stud Shear Connectors	Each	1,937
Reinforcement Bars, Epoxy Coated	Pound	8,890
Name Plate	Foot	1
Furnishing Soldier Piles (HP Section)	Each	1,029
Driving Soldier Piles	Foot	1,029
Untreated Timber Lagging	Sq Ft	2,521
Concrete Sealer	Sq Ft	3,790
Granular Backfill for Structures	Cu Yd	32
Geocomposite Wall Drain	Sq Yd	270
Concrete Gutter, Type B	Foot	305
Micropiles - Wall	Each	41
Pipe Underdrains for Structures 4"	Foot	384

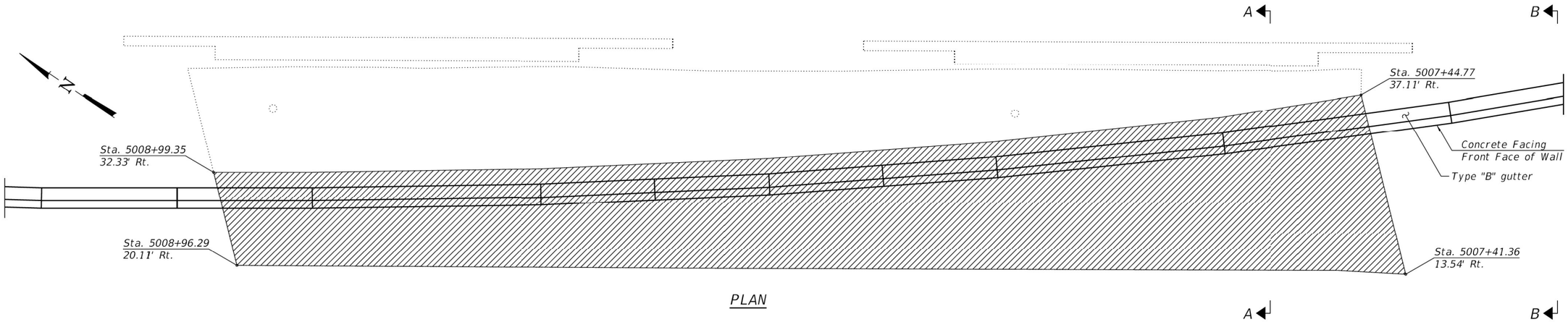

PLAN

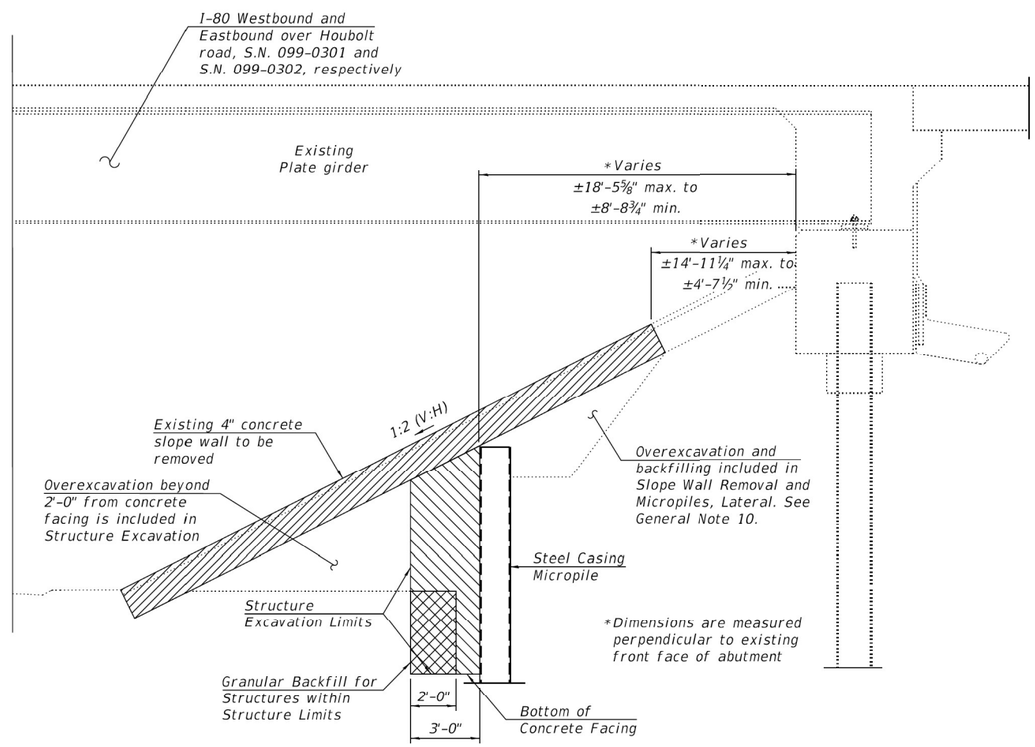

*Dimensions are measured perpendicular to existing front face of abutment

SECTION A-A
(Looking North)

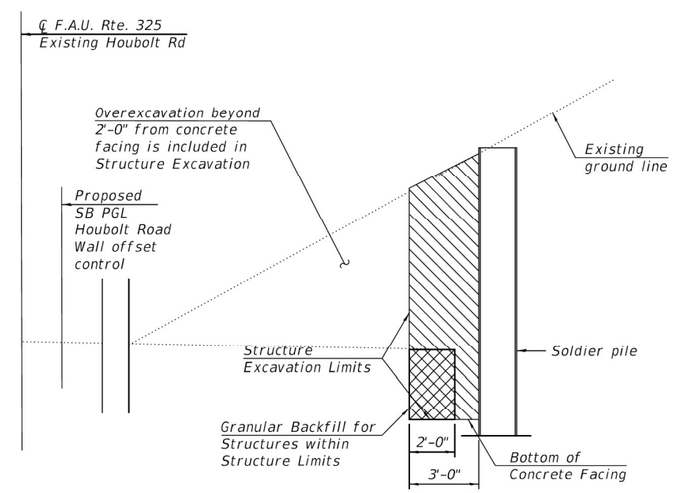

SECTION B-B
(Looking North)

LEGEND

- Slope Wall Removal
- Structure Excavation
- Granular Backfill for Structures

BILL OF MATERIAL

ITEM	UNIT	TOTAL
Slope Wall Removal	Sq Yd	268
Structure Excavation	Cu Yd	279
Granular Backfill for Structures	Cu Yd	32

FILE NAME = S:\JOL\4400-4499\4470\001\Moreau\CAD_Sheets\0010-XXX-XXXX_6003-REMOVAL.dgn

STRAND ASSOCIATES®
1170 SOUTH HOUBOLT ROAD
JOLIET, ILLINOIS 60431
(815) 744-4200
IDFPR NO. 184-001273

USER NAME = AlexSc	DESIGNED - BRL	REVISED -
	CHECKED - AJS	REVISED -
PLOT SCALE =	DRAWN - BJF	REVISED -
PLOT DATE = 7/9/2021	CHECKED - KRB	REVISED -

STATE OF ILLINOIS
DEPARTMENT OF TRANSPORTATION

REMOVAL PLAN
STRUCTURE NO. 099-6301

SHEET NO. 3 OF 16 SHEETS

F.A.U. RTE.	SECTION	COUNTY	TOTAL SHEETS	SHEET NO.
325	16-00503-00-PV	WILL	782	590
		CONTRACT NO. 2584-1021		
		ILLINOIS FED. AID PROJECT		

MODEL: Drawing Views
FILE NAME: pw://transystems-pw.bentley.com:transyscorp-pw1-hosted/Documents/Projects_2018/CH401/401180022/02-TranSystems/CAD/62R27/Sheets/23-Structural/099-0301 & 099-0302 Existing/0990301EX-62R27-001-Existing Plans 31.dgn

TRANSYSTEMS

USER NAME = amkluver	DESIGNED -	REVISED -
	CHECKED -	REVISED -
PLOT SCALE = NTS	DRAWN -	REVISED -
PLOT DATE = 6/23/2023	CHECKED -	REVISED -

STATE OF ILLINOIS
DEPARTMENT OF TRANSPORTATION

EXISTING PLANS
STRUCTURE NO. 099-0301 & 099-0302

SHEET SE1-31 OF SE1-48 SHEETS

F.A.I. RTE.	SECTION	COUNTY	TOTAL SHEETS	SHEET NO.
I-80	FAI 80 21 STRUCTURE 6	WILL	898	589
		CONTRACT NO. 62R27		
		ILLINOIS FED. AID PROJECT		

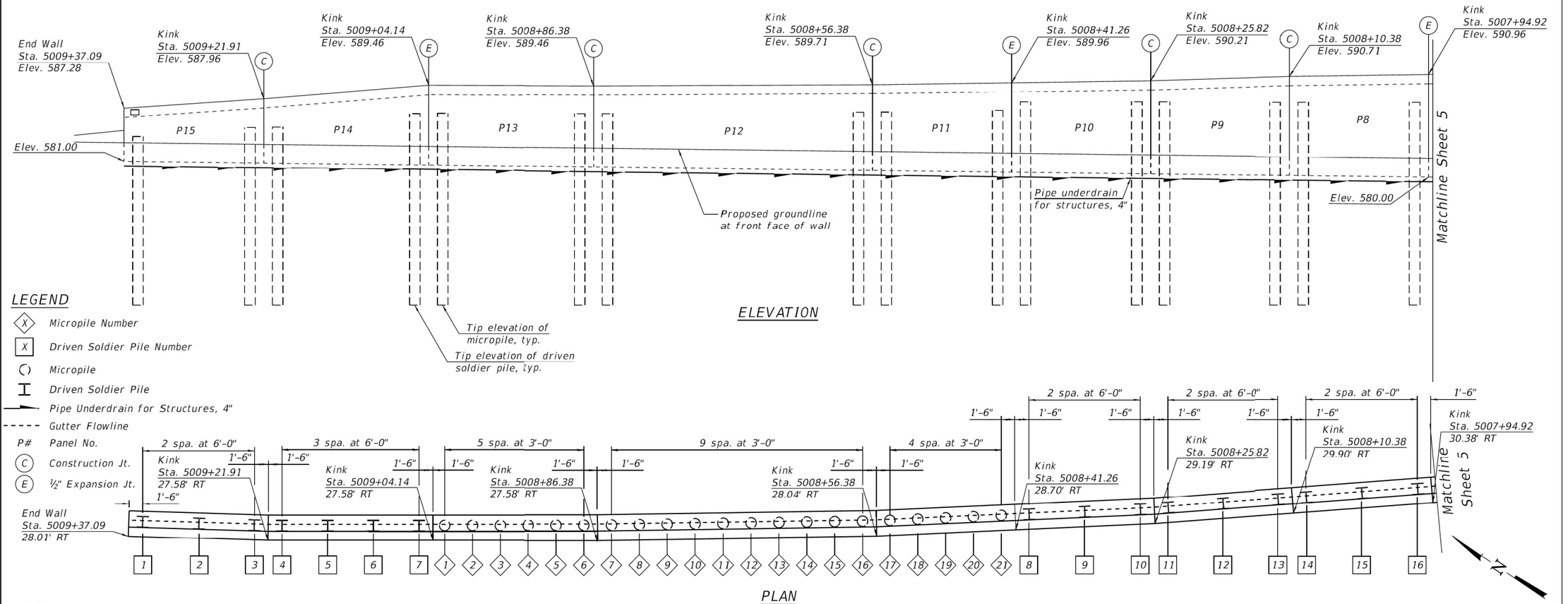

Notes:
1. Pile spacings are measured perpendicular to the rear face of the concrete facing.
2. Stations and offsets shown in plan and elevation drawings are to front face of concrete facing.

DRIVEN SOLDIER PILE SUMMARY TABLE 1 - SN 099-6301

Pile Number	Station at Centerline of Pile	Offset to Centerline of Pile, ft	Panel Number	Driven Soldier Pile, HP Size	Minimum Required Section, inches3	Driven Soldier Pile Length, ft	Bottom Pile Tip Elevation, ft	Top Pile Elevation, ft	# of Stud Shear Connectors
1	5009+35.51	29.59	15	HP14x89	131.0	29.0	557.29	586.29	7.00
2	5009+29.32	29.42	15	HP14x89	131.0	29.0	557.29	586.29	7.00
3	5009+23.37	29.24	15	HP14x89	131.0	29.0	557.29	586.29	7.00
4	5009+20.39	29.19	14	HP14x89	131.0	30.0	557.79	587.79	8.00
5	5009+15.47	29.19	14	HP14x89	131.0	30.0	557.79	587.79	8.00
6	5009+10.55	29.19	14	HP14x89	131.0	30.0	557.79	587.79	8.00
7	5009+05.63	29.19	14	HP14x89	131.0	30.0	557.79	587.79	8.00
8	5008+39.78	30.37	10	HP14x89	131.0	32.0	556.54	588.54	10.00
9	5008+33.59	30.58	10	HP14x89	131.0	32.0	556.54	588.54	10.00
10	5008+27.41	30.76	10	HP14x89	131.0	32.0	556.54	588.54	10.00
11	5008+24.31	30.88	9	HP14x89	131.0	33.0	556.04	589.04	11.00
12	5008+18.20	31.17	9	HP14x89	131.0	33.0	556.04	589.04	11.00
13	5008+12.01	31.44	9	HP14x89	131.0	33.0	556.04	589.04	11.00
14	5008+08.91	31.56	8	HP14x89	131.0	33.0	556.29	589.29	11.00
15	5008+02.73	31.77	8	HP14x89	131.0	33.0	556.29	589.29	11.00
16	5007+96.53	31.94	8	HP14x89	131.0	33.0	556.29	589.29	11.00

MICROPILE SUMMARY TABLE 1 - SN 099-6301

Pile Number	Station at Centerline of Pile	Offset to Centerline of Pile, ft	Panel Number	Micropile Designation O.D. Casing, inches	Minimum Required Section, inches	Micropile Length, ft	Bottom Pile Tip Elevation, ft	Top Pile Elevation, ft	# of Stud Shear Connectors
1	5009+02.88	29.21	13	11.875	55.29	29.00	557.46	586.46	28
2	5008+99.88	29.21	13	11.875	55.29	29.00	557.46	586.46	28
3	5008+96.88	29.21	13	11.875	55.29	29.00	557.46	586.46	28
4	5008+93.88	29.21	13	11.875	55.29	29.00	557.46	586.46	28
5	5008+90.88	29.21	13	11.875	55.29	29.00	557.46	586.46	28
6	5008+87.88	29.21	13	11.875	55.29	29.00	557.46	586.46	32
7	5008+84.90	29.23	12	11.875	55.29	30.00	556.71	586.71	32
8	5008+81.90	29.28	12	11.875	55.29	30.00	556.71	586.71	32
9	5008+78.90	29.32	12	11.875	55.29	30.00	556.71	586.71	32
10	5008+75.90	29.37	12	11.875	55.29	30.00	556.71	586.71	32
11	5008+72.90	29.41	12	11.875	55.29	30.00	556.71	586.71	32
12	5008+69.90	29.46	12	11.875	55.29	30.00	556.71	586.71	32
13	5008+66.90	29.50	12	11.875	55.29	30.00	556.71	586.71	32
14	5008+63.90	29.55	12	11.875	55.29	30.00	556.71	586.71	32
15	5008+60.90	29.59	12	11.875	55.29	30.00	556.71	586.71	32
16	5008+57.90	29.64	12	11.875	55.29	30.00	556.71	586.71	32
17	5008+54.95	29.73	11	11.875	55.29	30.00	557.21	587.21	32
18	5008+51.96	29.86	11	11.875	55.29	30.00	557.21	587.21	32
19	5008+48.96	30.00	11	11.875	55.29	30.00	557.21	587.21	32
20	5008+45.96	30.13	11	11.875	55.29	30.00	557.21	587.21	32
21	5008+42.87	30.26	11	11.875	55.29	30.00	557.21	587.21	32

STRAND ASSOCIATES®
1170 SOUTH HOUBOLT ROAD
JOLIET, ILLINOIS 60431
(815) 744-4200
IDFPR NO. 184-001273

USER NAME = AlexSc	DESIGNED - BRL	REVISED -	
	CHECKED - AJS	REVISED -	
PLOT SCALE =	DRAWN - BJF	REVISED -	
PLOT DATE = 7/9/2021	CHECKED - KRB	REVISED -	

STATE OF ILLINOIS
DEPARTMENT OF TRANSPORTATION

WALL PLAN AND ELEVATION - 1
STRUCTURE NO. 099-6301

SHEET NO. 4 OF 16 SHEETS

F.A.U. RTE.	SECTION	COUNTY	TOTAL SHEETS	SHEET NO.
325	16-00503-00-PV	WILL	782	591
		CONTRACT NO. 2584-1021		
		ILLINOIS FED. AID PROJECT		

TRANSYSTEMS

USER NAME = amkluver	DESIGNED -	REVISED -	
	CHECKED -	REVISED -	
PLOT SCALE = NTS	DRAWN -	REVISED -	
PLOT DATE = 6/23/2023	CHECKED -	REVISED -	

STATE OF ILLINOIS
DEPARTMENT OF TRANSPORTATION

EXISTING PLANS
STRUCTURE NO. 099-0301 & 099-0302

SHEET SE1-32 OF SE1-48 SHEETS

F.A.U. RTE.	SECTION	COUNTY	TOTAL SHEETS	SHEET NO.
I-80	FAI 80 21 STRUCTURE 6	WILL	898	590
		CONTRACT NO. 62R27		
		ILLINOIS FED. AID PROJECT		

FILE NAME = SA:\JOL\44280--49\44780\001\Micros\CAD\Sheets\0010-XXX-XXX_6004-WALLPLN.dgn
MODEL: Drawing Views
FILE NAME: pw://transystems-pw.bentley.com:transyscorp-pw1-hosted/Documents/Projects_2018/CH401/401180022/02-TranSystems/CAD/62R27/Sheets/23-Structural/099-0301 & 099-0302 Existing/0990301EX-62R27-001-Existing Plans 32.dgn

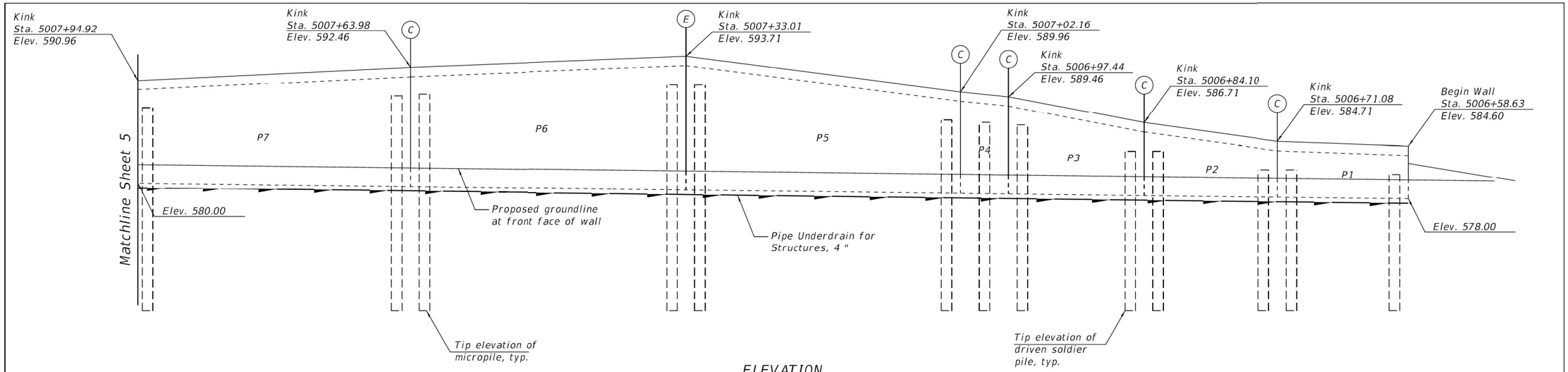

ELEVATION

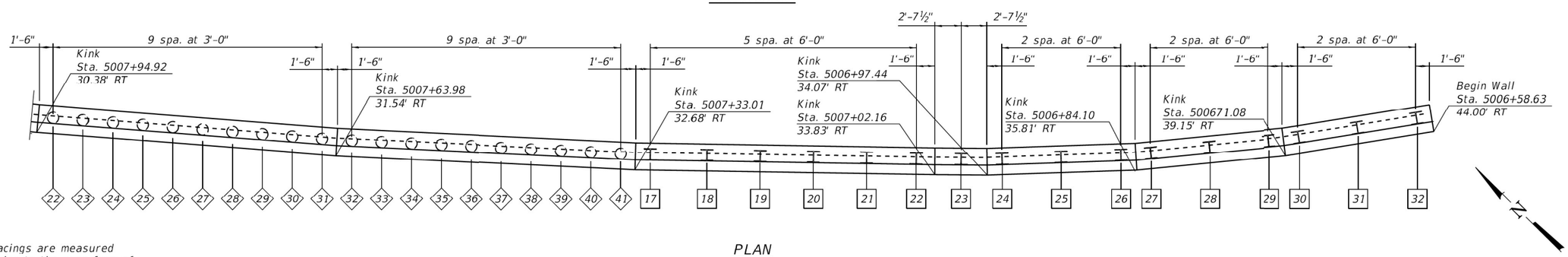

PLAN

Notes:
1. Pile spacings are measured perpendicular to the rear face of the concrete facing.
2. Stations and offsets shown in plan and elevation drawings are to front face of concrete facing.

DRIVEN SOLDIER PILE SUMMARY TABLE 2 - SN 099-6301

Pile Number	Station at Centerline of Pile	Offset to Centerline of Pile, ft	Panel Number	Driven Soldier Pile, HP Size	Minimum Required Section, inches^2	Driven Soldier Pile Length, ft	Bottom Pile Tip Elevation, ft	Top Pile Elevation, ft	# of Stud Shear Connectors
17	5007+31.53	34.37	5	HP14x89	131.0	37.0	553.79	590.79	13.00
18	5007+25.70	34.65	5	HP14x89	131.0	37.0	553.79	590.79	13.00
19	5007+20.18	34.88	5	HP14x89	131.0	37.0	553.79	590.79	13.00
20	5007+14.66	35.09	5	HP14x89	131.0	37.0	553.79	590.79	13.00
21	5007+09.13	35.27	5	HP14x89	131.0	37.0	553.79	590.79	13.00
22	5007+03.98	35.40	5	HP14x89	131.0	37.0	553.79	590.79	13.00
23	5006+99.86	35.55	4	HP14x89	131.0	33.0	555.29	588.29	11.00
24	5006+96.21	35.82	3	HP14x89	131.0	32.0	555.79	587.79	10.00
25	5006+90.97	36.45	3	HP14x89	131.0	32.0	555.79	587.79	10.00
26	5006+85.66	37.19	3	HP14x89	131.0	32.0	555.79	587.79	10.00
27	5006+83.03	37.70	2	HP14x89	131.0	30.0	555.04	585.04	8.00
28	5006+77.91	38.96	2	HP14x89	131.0	30.0	555.04	585.04	8.00
29	5006+72.75	40.33	2	HP14x89	131.0	30.0	555.04	585.04	8.00
30	5006+70.21	41.15	1	HP14x89	131.0	29.0	554.04	583.04	7.00
31	5006+65.27	43.02	1	HP14x89	131.0	29.0	554.04	583.04	7.00
32	5006+60.33	45.00	1	HP14x89	131.0	29.0	554.04	583.04	7.00

MICROPILE SUMMARY TABLE 2 - SN 099-6301

Pile Number	Station at Centerline of Pile	Offset to Centerline of Pile, ft	Panel Number	Micropile Designation O.D. Casing, inches	Minimum Required Section, inches^2	Micropile Length, ft	Bottom Pile Tip Elevation, ft	Top Pile Elevation, ft	# of Stud Shear Connectors
22	5007+93.46	32.08	7	14.0	69.11	33.00	556.46	589.46	44
23	5007+90.37	32.24	7	14.0	69.11	33.00	556.46	589.46	44
24	5007+87.27	32.38	7	14.0	69.11	33.00	556.46	589.46	44
25	5007+84.17	32.52	7	14.0	69.11	33.00	556.46	589.46	44
26	5007+81.08	32.64	7	14.0	69.11	33.00	556.46	589.46	44
27	5007+77.88	32.76	7	14.0	69.11	33.00	556.46	589.46	44
28	5007+74.88	32.87	7	14.0	69.11	33.00	556.46	589.46	44
29	5007+71.78	32.96	7	14.0	69.11	33.00	556.46	589.46	44
30	5007+68.68	33.05	7	14.0	69.11	33.00	556.46	589.46	44
31	5007+65.57	33.13	7	14.0	69.11	33.00	556.46	589.46	44
32	5007+62.52	33.25	6	14.0	69.11	34.00	555.46	589.46	48
33	5007+59.43	33.40	6	14.0	69.11	34.00	555.46	589.46	48
34	5007+56.32	33.54	6	14.0	69.11	34.00	555.46	589.46	48
35	5007+53.22	33.67	6	14.0	69.11	34.00	555.46	589.46	48
36	5007+50.12	33.80	6	14.0	69.11	34.00	555.46	589.46	48
37	5007+45.02	33.91	6	14.0	69.11	34.00	555.46	589.46	48
38	5007+43.91	34.01	6	14.0	69.11	34.00	555.46	589.46	48
39	5007+40.81	34.11	6	14.0	69.11	34.00	555.46	589.46	48
40	5007+37.71	34.20	6	14.0	69.11	34.00	555.46	589.46	48
41	5007+34.60	34.27	6	14.0	69.11	34.00	555.46	589.46	48

LEGEND

- X — Micropile Number
- X — Driven Soldier Pile Number
- Micropile
- Driven Soldier Pile
- Pipe Underdrain for Structures, 4"
- Gutter Flowline
- P# — Panel No.
- C — Construction Jt.
- E — ½" Expansion Jt.

STRAND ASSOCIATES®
1170 SOUTH HOUBOLT ROAD
JOLIET, ILLINOIS 60431
(815) 744-4200
IDFPR NO. 184-001273

USER NAME = AlexSc	DESIGNED - BRL	REVISED -	
	CHECKED - AJS	REVISED -	
PLOT SCALE =	DRAWN - BJF	REVISED -	
PLOT DATE = 7/9/2021	CHECKED - KRB	REVISED -	

STATE OF ILLINOIS
DEPARTMENT OF TRANSPORTATION

WALL PLAN AND ELEVATION - 2
STRUCTURE NO. 099-6301

SHEET NO. 5 OF 16 SHEETS

F.A.U. RTE.	SECTION	COUNTY	TOTAL SHEETS	SHEET NO.
325	16-00503-00-PV	WILL	782	592
		CONTRACT NO. 2584-1021		
		ILLINOIS FED. AID PROJECT		

TRANSYSTEMS

USER NAME = amkluver	DESIGNED -	REVISED -	
	CHECKED -	REVISED -	
PLOT SCALE = NTS	DRAWN -	REVISED -	
PLOT DATE = 6/23/2023	CHECKED -	REVISED -	

STATE OF ILLINOIS
DEPARTMENT OF TRANSPORTATION

EXISTING PLANS
STRUCTURE NO. 099-0301 & 099-0302

SHEET SE1-33 OF SE1-48 SHEETS

F.A.I. RTE.	SECTION	COUNTY	TOTAL SHEETS	SHEET NO.
I-80	FAI 80 21 STRUCTURE 6	WILL	898	591
		CONTRACT NO. 62R27		
		ILLINOIS FED. AID PROJECT		

FILE NAME = S:\JOL\44080-4x99\4470\080\Micros\CAD\Sheets\0810-XXX-XXX.6205-WALLPLN2.dgn

MODEL: Drawing Views
FILE NAME: pw://transystems-pw.bentley.com:transyscorp-pw1-hosted/Documents/Projects_2018/CH401/401180022/02-TranSystems/CAD/62R27/Sheets/23-Structural/099-0301 & 099-0302 Existing/09903301EX-62R27-001-Existing Plans 33.dgn

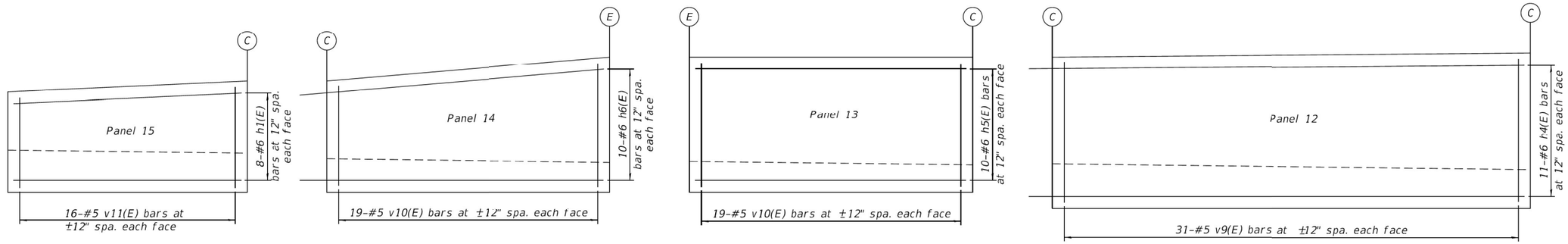

CONCRETE FACING PANEL ELEVATIONS

(Panels 15 to 12)

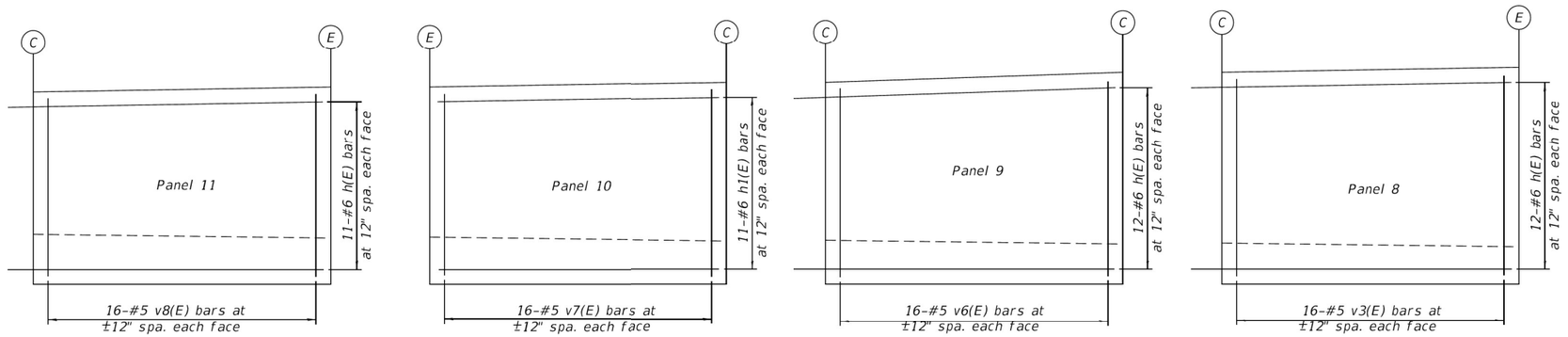

CONCRETE FACING PANEL ELEVATIONS

(Panels 11 to 8)

See wall and reinforcement detail notes on sheet 8 of 16.

CONCRETE PANEL FACING TABLE 1 - S.N. 099-6301				
Panel	W (FT)	X (FT)	Y (FT)	Z (FT)
15	6.96	2.78	15.00	4.18
14	8.46	1.50	17.77	6.96
13	8.46	0.00	17.77	8.46
12	9.71	0.25	30.00	9.46
11	9.96	0.25	15.00	9.71
10	10.21	0.25	15.00	9.96
9	10.71	0.50	15.00	10.21
8	10.96	0.25	15.00	10.71

1. See Panel Sketch -1 on this sheet for working panels 8 to 15.

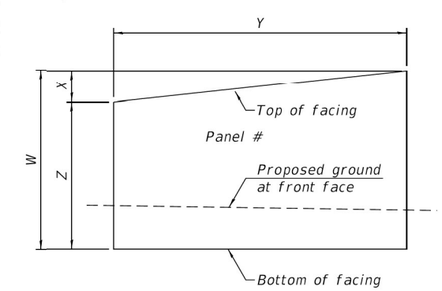

PANEL SKETCH-1

LEGEND

Panel #
(C) Construction Joint
(E) ½" Expansion Joint
- - - - - Proposed groundline

MIN. BAR LAP

#6 bar = 3'-10"

FILE NAME = S:\JOL\4400--4x99\4470\001\Micro$\CAD_Sheets\0010-XXX-XXX.6006-WALLDETL.dgn

STRAND ASSOCIATES	USER NAME = AlexSc	DESIGNED - BRL	REVISED -	STATE OF ILLINOIS DEPARTMENT OF TRANSPORTATION	WALL DETAILS - 1 STRUCTURE NO. 099-6301	F.A.U. RTE.	SECTION	COUNTY	TOTAL SHEETS	SHEET NO.
1170 SOUTH HOUBOLT ROAD JOLIET, ILLINOIS 60431 (815) 744-4200 IDFPR NO. 184-001273		CHECKED - AJS	REVISED -			325	16-00503-00-PV	WILL	782	593
	PLOT SCALE =	DRAWN - BJF	REVISED -					CONTRACT NO. 2584-1021		
	PLOT DATE = 7/9/2021	CHECKED - KRB	REVISED -		SHEET NO. 6 OF 16 SHEETS			ILLINOIS FED. AID PROJECT		

TRANSYSTEMS	USER NAME = amkluver	DESIGNED -	REVISED -	STATE OF ILLINOIS DEPARTMENT OF TRANSPORTATION	EXISTING PLANS STRUCTURE NO. 099-0301 & 099-0302	F.A.I. RTE.	SECTION	COUNTY	TOTAL SHEETS	SHEET NO.
		CHECKED -	REVISED -			I-80	FAI 80 21 STRUCTURE 6	WILL	898	592
	PLOT SCALE = NTS	DRAWN -	REVISED -					CONTRACT NO. 62R27		
	PLOT DATE = 6/23/2023	CHECKED -	REVISED -		SHEET SE1-34 OF SE1-48 SHEETS			ILLINOIS FED. AID PROJECT		

MODEL: Drawing Views
FILE NAME: pw://transystems-pw.bentley.com:transyscorp-pw1-hosted/Documents/Projects_2018/CH401/401180022/02-TranSystems/CAD/62R27/Sheets/23-Structural/099-0301 & 099-0302 Existing/0990301EX-62R27-001-Existing Plans 34.dgn

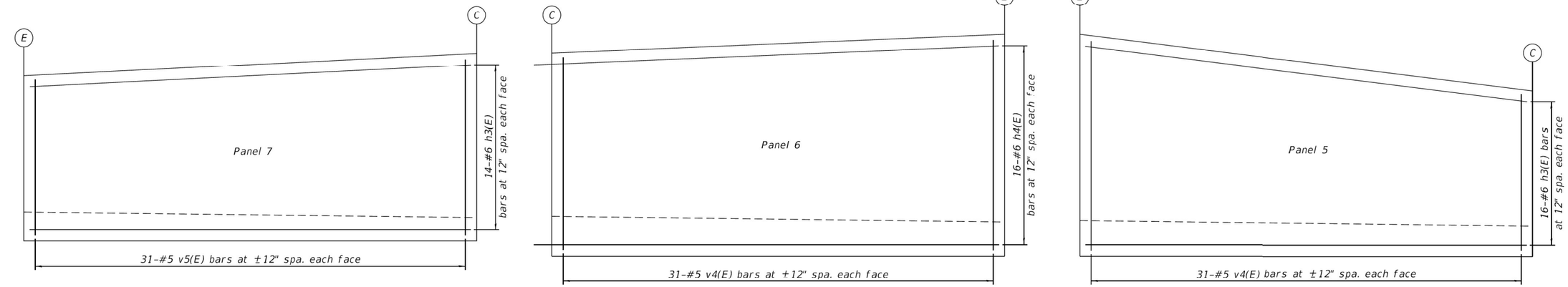

CONCRETE FACING PANEL ELEVATIONS

(Panels 7 to 5)

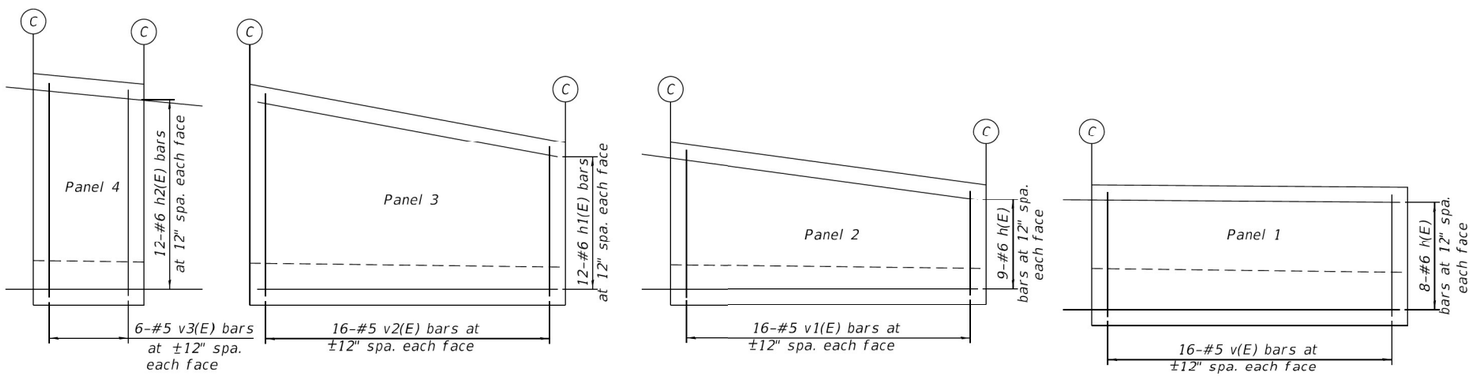

CONCRETE FACING PANEL ELEVATIONS

(Panels 4 to 1)

See wall and reinforcement detail notes on sheet 8 of 16.

CONCRETE PANEL FACING TABLE 2 - S.N. 099-6301				
Panel	W (FT)	X (FT)	Y (FT)	Z (FT)
7	12.46	1.50	30.00	10.96
6	14.71	1.25	30.00	13.46
5	14.71	3.75	30.00	10.96
4	10.96	0.50	5.25	10.46
3	10.46	2.75	15.00	7.71
2	7.71	2.00	15.00	5.71
1	6.71	3.00	15.00	3.71

1. See Panel Sketch-1 on Sheet 6 of 16 for working panels 7 and 6 with Table.

2. See Panel Sketch-2 on this sheet for working panels 1 to 5.

LEGEND

Panel #

(C) Construction Joint

(E) ½" Expansion Joint

- - - - - Proposed groundline

MIN. BAR LAP

#6 bar = 3'-10"

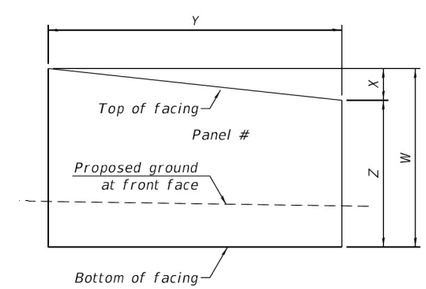

PANEL SKETCH - 2

STRAND ASSOCIATES® 1170 SOUTH HOUBOLT ROAD JOLIET, ILLINOIS 60431 (815) 744-4200 IDFPR NO. 184-001273	USER NAME = AlexSc	DESIGNED - BRL	REVISED -	STATE OF ILLINOIS DEPARTMENT OF TRANSPORTATION	WALL DETAILS - 2 STRUCTURE NO. 099-6301
		CHECKED - AJS	REVISED -		
	PLOT SCALE =	DRAWN - BJF	REVISED -		
	PLOT DATE = 7/9/2021	CHECKED - KRB	REVISED -		SHEET NO. 7 OF 16 SHEETS

F.A.U. RTE.	SECTION	COUNTY	TOTAL SHEETS	SHEET NO.
325	16-00503-00-PV	WILL	782	594
		CONTRACT NO. 2584-1021		
		ILLINOIS FED. AID PROJECT		

TRANSYSTEMS	USER NAME = amkluver	DESIGNED -	REVISED -	STATE OF ILLINOIS DEPARTMENT OF TRANSPORTATION	EXISTING PLANS STRUCTURE NO. 099-0301 & 099-0302
		CHECKED -	REVISED -		
	PLOT SCALE = NTS	DRAWN -	REVISED -		
	PLOT DATE = 6/23/2023	CHECKED -	REVISED -		SHEET SE1-35 OF SE1-48 SHEETS

F.A.I. RTE.	SECTION	COUNTY	TOTAL SHEETS	SHEET NO.
I-80	FAI 80 21 STRUCTURE 6	WILL	898	593
		CONTRACT NO. 62R27		
		ILLINOIS FED. AID PROJECT		

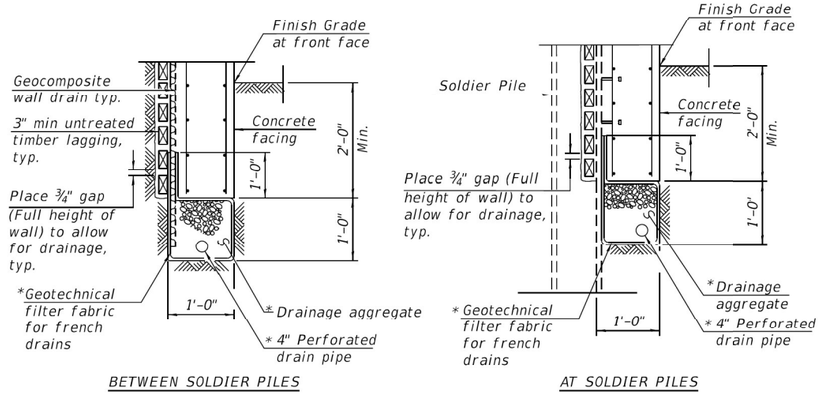

PIPE UNDERDRAIN DETAIL

*Included in the cost of Pipe Underdrains for Structures 4"

Pipe Underdrain shall tie into storm sewer. The pipe will outlet at approximately Sta. 5005+95.59 O/S 107.63' RT. Once the 4" perforated drain pipe exits the geotechnical filter fabric it shall be a solid 6" ∅ schedule 80 PVC pipe (minimum), included in cost of Pipe Underdrains for Structures 4"

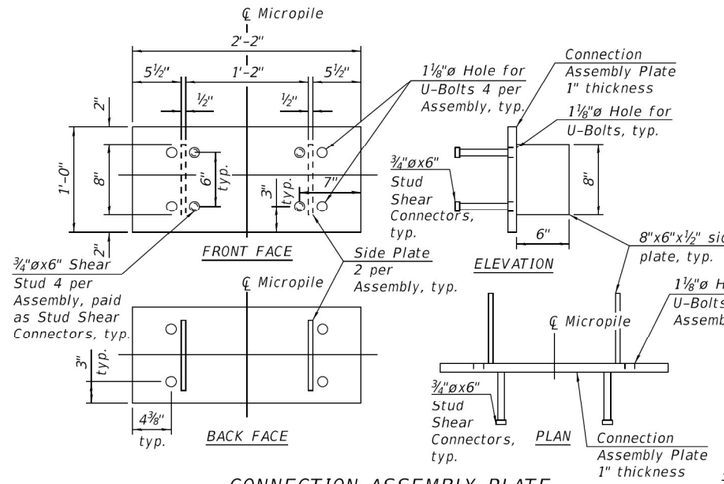

CONNECTION ASSEMBLY PLATE

(1 Assembly; Total Assemblies 393)
Note: Connection Assembly Plate, or submitted equal by shop drawings, to provide connection between Micropile and Stud Shear Connectors embeded into Concrete Facing. Timber lagging rests on the back face of the plate at Micropile locations. Connection Assembly Plates should be stacked to provide continuous timber lagging support.

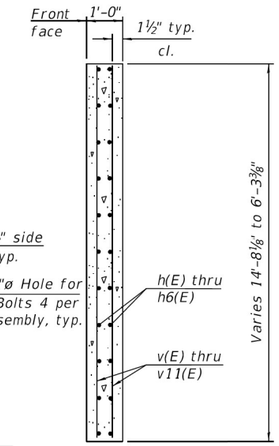

SECTION THRU CONCRETE PANEL FACING

NOTES

1. Stations and dimensions are at front face of wall.
2. Space reinforcement in wall to miss shear studs.
3. For Typical Section, see Sheet 2 of 16 and this sheet.
4. Vertical bars are cut to fit.
5. Horizontal top bars along the slope are to be fanned.
6. Front face of concrete facing to be cast vertical.
7. Connection Assembly Plate – 393 Total Assemblies (Paid under Furnishing and Erecting Structural Steel. See General Note 1.):
   1 – 2'-2"x1'-0"x1" Plate
   2 – 6"x8"x½" Side Plates
   4 – 1⅛" Dia. Holes
   4 – Stud Shear Connectors (Paid seperately as Stud Shear Connectors)
8. Connection Assembly UBolts – 393 Total Assemblies (Paid under Furnishing and Erecting Structural Steel. See General Note 1.):
   2 – Ubolts 1" Dia. or sized to fit Micropile
   4 – Heavy Hex Nuts

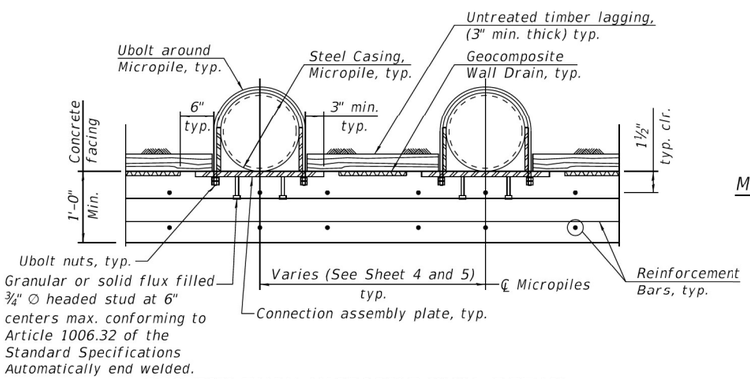

SECTION THRU MICROPILE WALL DETAIL

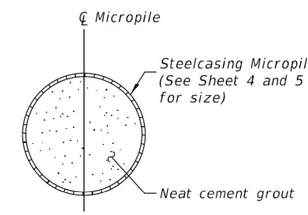

MICROPILE SECTION

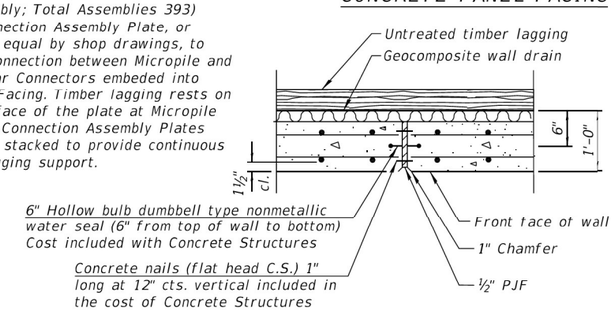

EXPANSION JOINT DETAIL

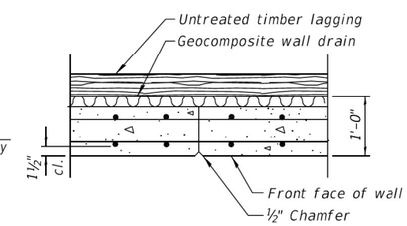

CONSTRUCTION JOINT DETAIL

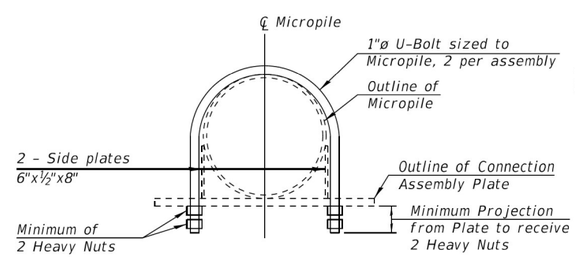

CONNECTION ASSEMBLY U-BOLTS

(1 Assembly; Total Assemblies 393)

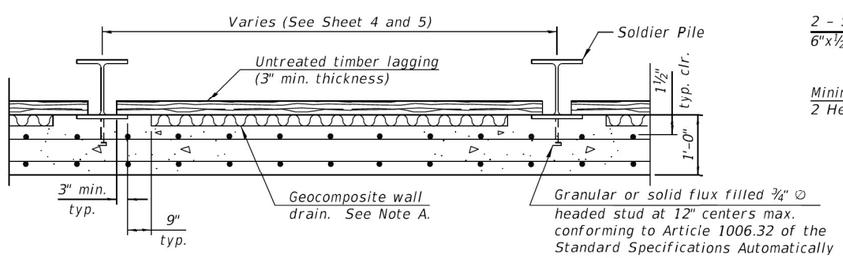

SECTION THRU DRILLED SOLDIER PILE WALL

Note A: Geocomposite wall drain shall not have a thickness greater than 13/16"

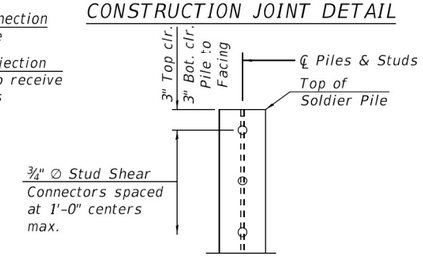

SHEAR STUD PLACEMENT

MICROPILE WALL AND DRIVEN SOLDIER PILE WALL BILL OF MATERIAL

Bar	No.	Size	Length	Shape
h(E)	52	#6	18'-10"	
h1(E)	31	#6	14'-8"	
h2(E)	12	#6	12'-11"	
h3(E)	30	#6	29'-8"	
h4(E)	27	#6	33'-10"	
h5(E)	10	#6	17'-5"	
h6(E)	10	#6	21'-7"	
v(E)	16	#5	6'-5"	
v1(E)	16	#5	7'-5"	
v2(E)	16	#5	10'-2"	
v3(E)	22	#5	10'-8"	
v4(E)	62	#5	14'-4"	
v5(E)	31	#5	12'-2"	
v6(E)	16	#5	10'-5"	
v7(E)	16	#5	91'-1"	
v8(E)	16	#5	9'-8"	
v9(E)	31	#5	9'-5"	
v10(E)	38	#5	8'-2"	
v11(E)	16	#5	6'-8"	
Concrete Structures		Cu Yd	146	
Furnishing and Erecting Structural Steel		Pound	49,670	
Stud Shear Connectors		Each	1,937	
Reinforcement Bars, Epoxy Coated		Pound	8,890	
Furnishing Soldier Piles (HP Section)		Foot	1,029	
Driving Soldier Piles		Foot	1,029	
Untreated Timber Lagging		Sq Ft	2,521	
Concrete Sealer		Sq Ft	3,790	
Geocomposite Wall Drain		Sq Yd	270	
Micropiles – Wall		Each	41	
Pipe Underdrains for Structure 4"		Foot	384	

FILE NAME = S:\JOL\4408-4495\4720\001\Micros\CAD_Sheets\0018-XXX-XXXX.6808-WALLDET3.dgn

STRAND ASSOCIATES® 1170 SOUTH HOUBOLT ROAD JOLIET, ILLINOIS 60431 (815) 744-4200 IDFPR NO. 184-001273

USER NAME = AlexSc	DESIGNED - BRL	REVISED -	
	CHECKED - AJS	REVISED -	
PLOT SCALE =	DRAWN - BJF	REVISED -	
PLOT DATE = 7/9/2021	CHECKED - KRB	REVISED -	

STATE OF ILLINOIS
DEPARTMENT OF TRANSPORTATION

WALL DETAILS – 3
STRUCTURE NO. 099–6301

SHEET NO. 8 OF 16 SHEETS

F.A.U. RTE.	SECTION	COUNTY	TOTAL SHEETS	SHEET NO.
325	16-00503-00-PV	WILL	782	595
		CONTRACT NO. 2584-1021		
		ILLINOIS FED. AID PROJECT		

MODEL: Drawing Views
FILE NAME: pw://transystems-pw.bentley.com:transyscorp-pw1-hosted/Documents/Projects_2018/CH401/401180022/02-TranSystems/CAD/62R27/Sheets/23-Structural/099-0301 & 099-0302 Existing/0990301EX-62R27-001-Existing Plans 36.dgn

TRANSYSTEMS

USER NAME = amkluver	DESIGNED -	REVISED -	
	CHECKED -	REVISED -	
PLOT SCALE = NTS	DRAWN -	REVISED -	
PLOT DATE = 6/23/2023	CHECKED -	REVISED -	

STATE OF ILLINOIS
DEPARTMENT OF TRANSPORTATION

EXISTING PLANS
STRUCTURE NO. 099-0301 & 099-0302

SHEET SE1-36 OF SE1-48 SHEETS

F.A.I. RTE.	SECTION	COUNTY	TOTAL SHEETS	SHEET NO.
I-80	FAI 80 21 STRUCTURE 6	WILL	898	594
		CONTRACT NO. 62R27		
		ILLINOIS FED. AID PROJECT		

Interra, Inc.
600 Territorial Drive, Suite G
Bolingbrook, IL 60440
www.interraservices.com

SOIL BORING LOG

Page 1 of 1

Date 11/20/17

ROUTE Houbolt Road DESCRIPTION Slope Wall Boring LOGGED BY Eric Slusser

SECTION _____ LOCATION I-80 & Houbolt Interchange

COUNTY Will County DRILLING METHOD Hollow Stem Auger HAMMER TYPE Automatic

STRUCT. NO. _____
Station _____

BORING NO. SW-01
Station 5008+92
Offset 6.00ft RT
Ground Surface Elev. 584.00 ft

Surface Water Elev. _____ ft
Stream Bed Elev. _____ ft

Groundwater Elev.:
First Encounter 577.0 ft
Upon Completion 577.0 ft
After ____ Hrs. _____ ft

Description	Elev.	DEPTH (ft)	BLOWS (/6")	UCS Qu (tsf)	MOIST (%)
12" ASPHALT	583.00				
Medium dense to dense, Light Gray (10YR 7/1) CRUSHED ROCK AGGREGATE, mixed with sand, moist			15		
			6		
			4		
			4		
			2		
		-5	34		
Dense to very dense, brown (10YR 5/3) SANDY LOAM little medium to fine gravel saturated at 7.0 feet	578.50				
			12		
			26		7.8
			32		
			19		
			50		5.1
		-10			
very dense to medium dense, pale brown (10YR 6/3) SAND little fine gravel saturated	573.50				
			33		
			40		4.4
			30		
			7		
			8		8.0
	569.00	-15	10		
		-20			

The Unconfined Compressive Strength (UCS) Failure Mode is indicated by (B-Bulge, S-Shear, P-Penetrometer)

BBS, from 137 (Rev. 8-99)

Interra, Inc.
600 Territorial Drive, Suite G
Bolingbrook, IL 60440
www.interraservices.com

SOIL BORING LOG

Page 1 of 1

Date 11/20/17

ROUTE Houbolt Road DESCRIPTION Slope Wall Boring LOGGED BY Eric Slusser

SECTION _____ LOCATION I-80 & Houbolt Interchange

COUNTY Will County DRILLING METHOD Hollow Stem Auger HAMMER TYPE Automatic

STRUCT. NO. _____
Station _____

BORING NO. SW-02
Station 5007+25
Offset 14.00ft LT
Ground Surface Elev. 582.94 ft

Surface Water Elev. _____ ft
Stream Bed Elev. _____ ft

Groundwater Elev.:
First Encounter 569.4 ft
Upon Completion 569.4 ft
After ____ Hrs. _____ ft

Description	Elev.	DEPTH (ft)	BLOWS (/6")	UCS Qu (tsf)	MOIST (%)
11" ASPHALT	582.02				
Loose to very loose, light gray (10YR 7/1) SAND FILL some crushed rock aggregate moist			14		
			5		1.9
			4		
			2		
			2		2.4
		-5	2		
Dense, Brown (10YR 5/3) SANDY LOAM FILL little fine gravel, crushed rock aggregate moist	577.44				
			8		
			19		4.6
			20		
Very dense to medium dense, brown (10YR 5/3) SAND little medium to fine gravel saturated at 13.5 feet	574.94				
			14		
			32		4.8
		-10	35		
			24		
			14		5.8
			12		
			5		
			12		12.2
		-15	12		
Very dense, light gray (10YR 7/1) SILTY LOAM trace fine gravel wet	567.44				
			17		
			40		9.9
			49		
			29		
			36		8.3
		-20	29		
Very dense, light gray (10YR 7/1) SANDY LOAM little large gravel saturated	562.44				
			31		
			50		9.8
WEATHERED BEDROCK	559.94				
			50		
					10.3
		-25			
Light gray (10YR 7/1) and dark gray (10YR 3/1) DOLOMITIC LIMESTONE Hard, weathered throughout the run RQD=45.2%, poor rock quality	554.94				
		-30			
		-35			
	544.94				
		-40			

The Unconfined Compressive Strength (UCS) Failure Mode is indicated by (B-Bulge, S-Shear, P-Penetrometer)

BBS, from 137 (Rev. 8-99)

FILE NAME = S:\JOL\4400--49\4470\001\Micro\CAD_Sheets\0010-XXX-XXX.6012-SBL.dgn

STRAND ASSOCIATES®
1170 SOUTH HOUBOLT ROAD
JOLIET, ILLINOIS 60431
(815) 744-4200
IDFPR NO. 184-001273

USER NAME = AlexSc	DESIGNED - BRL	REVISED -
	CHECKED - AJS	REVISED -
PLOT SCALE =	DRAWN - BJF	REVISED -
PLOT DATE = 7/9/2021	CHECKED - KRB	REVISED -

STATE OF ILLINOIS
DEPARTMENT OF TRANSPORTATION

SOIL BORING LOGS – 1
STRUCTURE NO. 099–6301

SHEET NO. 9 OF 16 SHEETS

F.A.U. RTE.	SECTION	COUNTY	TOTAL SHEETS	SHEET NO.
325	16-00503-00-PV	WILL	782	596
		CONTRACT NO. 2584-1021		
		ILLINOIS FED. AID PROJECT		

MODEL: Drawing Views
FILE NAME: pw://transystems-pw.bentley.com:transyscorp-pw1-hosted/Documents/Projects_2018/CH401/401180022/02-TranSystems/CAD/62R27/Sheets/23-Structural/099-0301 & 099-0302 Existing/0990301EX-62R27-001-Existing Plans 37.dgn

TRANSYSTEMS

USER NAME = amkluver	DESIGNED -	REVISED -
	CHECKED -	REVISED -
PLOT SCALE = NTS	DRAWN -	REVISED -
PLOT DATE = 6/23/2023	CHECKED -	REVISED -

STATE OF ILLINOIS
DEPARTMENT OF TRANSPORTATION

EXISTING PLANS
STRUCTURE NO. 099-0301 & 099-0302

SHEET SE1-37 OF SE1-48 SHEETS

F.A.I. RTE.	SECTION	COUNTY	TOTAL SHEETS	SHEET NO.
I-80	FAI 80 21 STRUCTURE 6	WILL	898	595
		CONTRACT NO. 62R27		
		ILLINOIS FED. AID PROJECT		

Illinois Department of Transportation
Division of Highways
Interra, Inc.

ROCK CORE LOG

Date 11/20/17

ROUTE Houbolt Road DESCRIPTION Slope Wall Boring LOGGED BY Eric Slusser

SECTION _____ LOCATION I-80 & Houbolt Interchange

COUNTY Will County CORING METHOD NQ Conventional

STRUCT. NO. _____
Station _____

BORING NO. SW-02
Station _____
Offset _____
Ground Surface Elev. 582.94 ft

CORING BARREL TYPE & SIZE NC
Core Diameter 1.8 in
Top of Rock Elev. 554.94 ft
Begin Core Elev. 554.94 ft

		DEPTH (ft)	CORE (#)	RECOVERY (%)	R.Q.D. (%)	CORE TIME (min/ft)	STRENGTH (tsf)
Light gray (10YR 7/1) and dark gray (10YR 3/1) DOLOMITIC LIMESTONE Hard, weathered throughout the run RQD=45.2%, poor rock quality	554.94		1	100	45	11	
		-30					
		-35					
	544.94						
End of Boring							
		-40					
		-45					

Color pictures of the cores _____
Cores will be stored for examination until 2021
The "Strength" column represents the uniaxial compressive strength of the core sample (ASTM D-2938)
BBS, form 138 (Rev. 8-99)

FILE NAME = S:\JOL\4400--4c9\4470\001\Micro\CAD_Sheets\0010-XXX-XXX.6013-SBL2.dgn

STRAND ASSOCIATES
1170 SOUTH HOUBOLT ROAD
JOLIET, ILLINOIS 60431
(815) 744-4200
IDFPR NO. 184-001273

USER NAME = AlexSc	DESIGNED - BRL	REVISED -	
	CHECKED - AJS	REVISED -	
PLOT SCALE =	DRAWN - BJF	REVISED -	
PLOT DATE = 7/9/2021	CHECKED - KRB	REVISED -	

STATE OF ILLINOIS
DEPARTMENT OF TRANSPORTATION

SOIL BORING LOGS – 2
STRUCTURE NO. 099–6301
SHEET NO. 10 OF 16 SHEETS

F.A.U. RTE.	SECTION	COUNTY	TOTAL SHEETS	SHEET NO.
325	16-00503-00-PV	WILL	782	597
		CONTRACT NO. 2584-1021		
		ILLINOIS FED. AID PROJECT		

MODEL: Drawing Views
FILE NAME: pw://transystems-pw.bentley.com:transyscorp-pw1-hosted/Documents/Projects_2018/CH401/401180022/02-TranSystems/CAD/62R27/Sheets/23-Structural/099-0301 & 099-0302 Existing/0990301EX-62R27-001-Existing Plans 38.dgn

TRANSYSTEMS

USER NAME = amkluver	DESIGNED -	REVISED -	
	CHECKED -	REVISED -	
PLOT SCALE = NTS	DRAWN -	REVISED -	
PLOT DATE = 6/23/2023	CHECKED -	REVISED -	

STATE OF ILLINOIS
DEPARTMENT OF TRANSPORTATION

EXISTING PLANS
STRUCTURE NO. 099-0301 & 099-0302
SHEET SE1-38 OF SE1-48 SHEETS

F.A.I. RTE.	SECTION	COUNTY	TOTAL SHEETS	SHEET NO.
I-80	FAI 80 21 STRUCTURE 6	WILL	898	596
		CONTRACT NO. 62R27		
		ILLINOIS FED. AID PROJECT		

Benchmark Information: Chiseled square on the top westerly side of concrete foundation for cantilevered traffic signal at the southwest quandrant of Houbolt Road and I-80 West Bound on ramp. Elev. 588.31.

Existing structure: None. Adjacent existing structure SN099-0301 and SN099-0302, I-80 eastbound and westbound respectively. Parallel 146'-0" simple span 60" steel plate girder bridges on integral abutments with 1:2 slope walls.

Traffic control: Staged.

Salvage: None.

LEGEND

(#) Designates front face of wall Control Point. See Wall Geometry Control Table. Work this legend with table on sheet 2 of 19

P# Panel Number

Note: Offsets are measured from Proposed NB PGL Houbolt Road to front face of wall

INDEX OF SHEETS

SCOPE OF WORK

1. Remove portion of Slope Wall
2. Support Remaining Slope Wall and Embankment for Wall Construction
3. Construct Micropiles Wall and Concrete Facing
4. Construct Driven Soldier Pile Wall and Concrete Facing
5. Construct Anchorage Slab
6. Construct Constant Slope Barrier

ANTICIPATED CONSTRUCTION SEQUENCE

1. Remove Slope Wall to limits shown while supporting remaining slope wall and embankment.
2. Install Micropile and Driven Soldier Pile Walls
3. Install Untreated Timber Lagging, Geocomposite Wall Drain, and Underdrain
4. Construct Concrete Facing
5. Install Concrete Gutter
6. Construct Anchorage Slab and Constant Slope Barrier

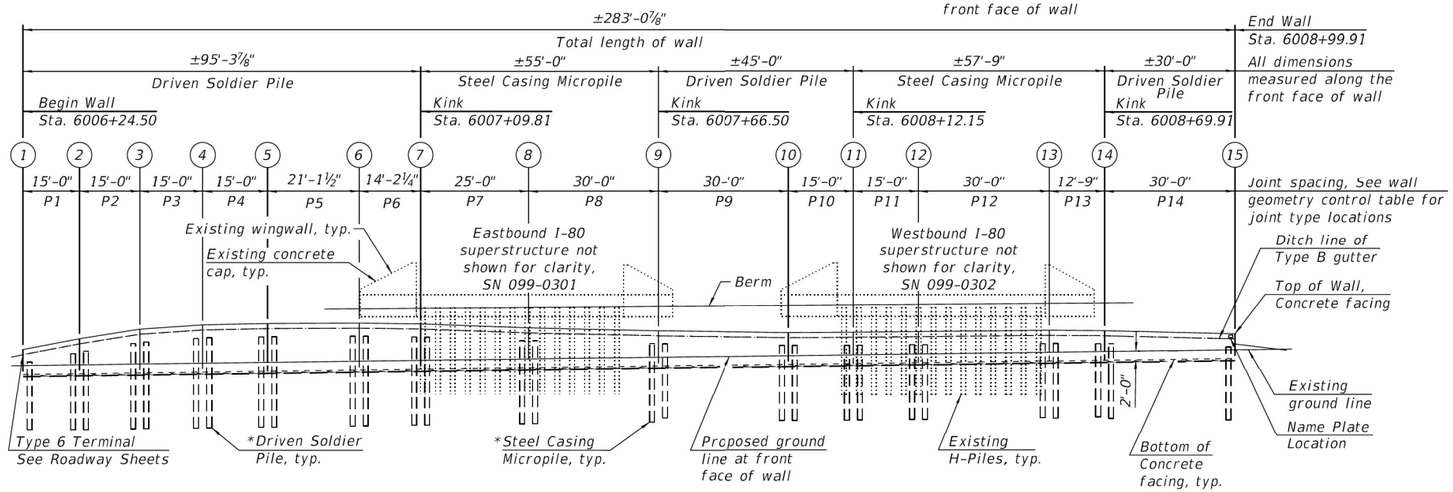

*Driven Soldier Pile and Steel Casing Micropile details shown on sheets 4 and 5 of 16.

ELEVATION

(Looking west at front face of wall)

CURVE DDI NB6

P.I. Sta. = 6006+29.35
Δ = 16°59'46" (RT)
D = 11°27'33"
R = 500.00'
T =74.71'
L = 148.32'
E = 5.55'
P.C. Sta. = 6005+54.64
P.T. Sta. = 6007+02.96

CURVE DDI NB7

P.I. Sta. = 6007+46.59
Δ = 4°59'46" (LT)
D = 5°43'46"
R = 1,000.00
T =43.63'
L = 87.20'
E = 0.95'
P.C. Sta. = 6007+02.96
P.T. Sta. = 6007+90.16

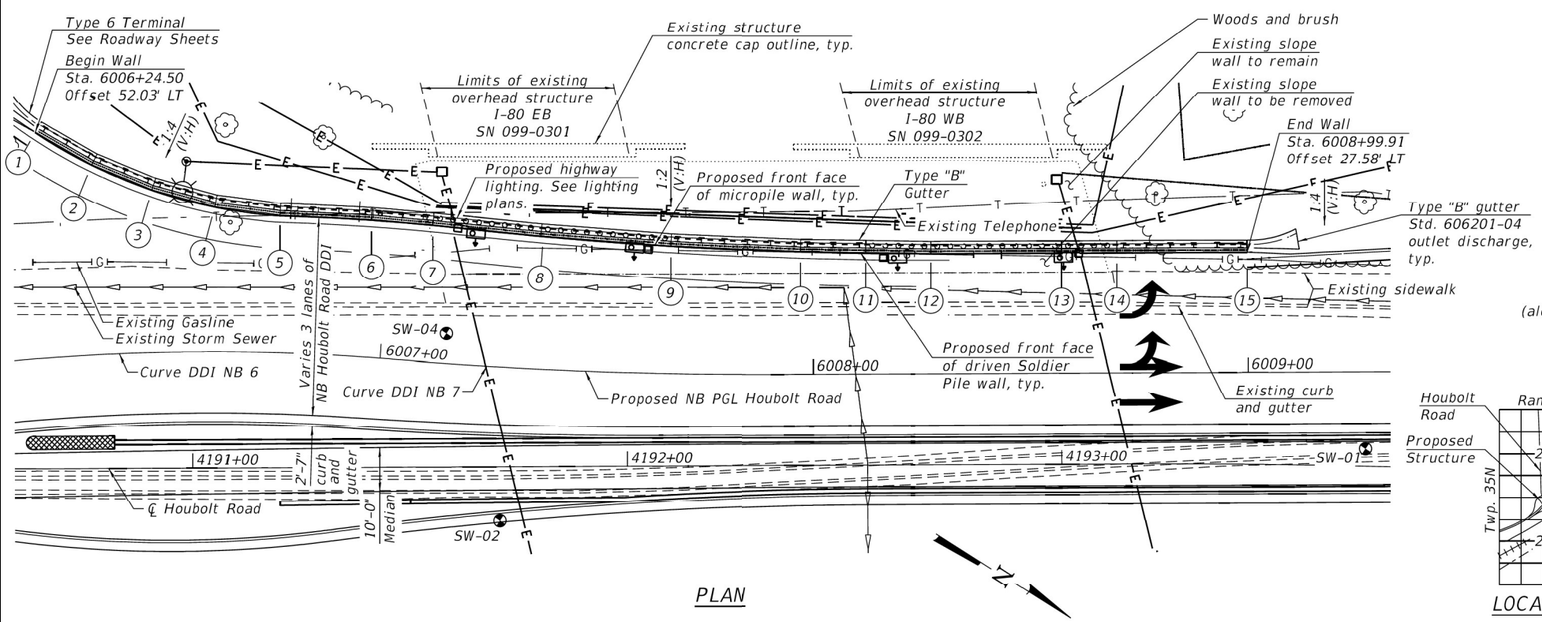

PLAN

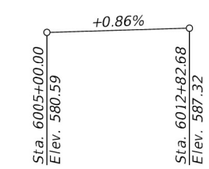

PROFILE GRADE

(along ℄ proposed DDI NB Houbolt Rd)

DESIGN STRESSES

f'c = 3,500 psi (Concrete facing)
f'c = 5,000 psi (Grout)
fy = 60,000 psi (Reinforcement)
fy = 36,000 psi (Structural Steel) AASHTO M270 Gr. 36
fy = 50,000 psi (Soldier Pile) AASHTO M270 Gr. 50
fy = 80,000 psi (Steel Casing-Micro Pile)

DESIGN SPECIFICATIONS

2020 AASHTO LRFD Bridge Design Specifications, 9th Edition

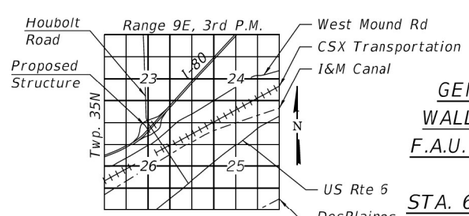

LOCATION SKETCH

GENERAL PLAN AND ELEVATION
WALL AT HOUBOLT ROAD AND I-80
F.A.U. 325 SECTION 16-00503-00-PV
WILL COUNTY
STA. 6006+24.50 TO STA. 6008+99.91
STRUCTURE NO. 099-6302

FILE NAME = S:\JOL\14400-4499\14470\001\Micro\CAD\Sheets\0010-XXX-XXX_7001-GP&E.dgn

STRAND ASSOCIATES® 1170 SOUTH HOUBOLT ROAD JOLIET, ILLINOIS 60431 (815) 744-4200 IDFPR NO. 184-001273

USER NAME = AlexSc	DESIGNED - BRL	REVISED -	
	CHECKED - AJS	REVISED -	
PLOT SCALE =	DRAWN - BJF	REVISED -	
PLOT DATE = 7/9/2021	CHECKED - BRL	REVISED -	

STATE OF ILLINOIS
DEPARTMENT OF TRANSPORTATION

GENERAL PLAN AND ELEVATION
STRUCTURE NO. 099-6302

SHEET NO. 1 OF 16 SHEETS

F.A.U. RTE.	SECTION	COUNTY	TOTAL SHEETS	SHEET NO.
325	16-00503-00-PV	WILL	782	604
		CONTRACT NO. 2584-1021		
		ILLINOIS FED. AID PROJECT		

MODEL: Drawing Views
FILE NAME: pw://transystems-pw.bentley.com:transyscorp-pw1-hosted/Documents/Projects_2018/CH401/401180022/02-TranSystems/CAD/62R27/Sheets/23-Structural/099-0301 & 099-0302 Existing/0990301EX-62R27-001-Existing Plans 39.dgn

TRANSYSTEMS

USER NAME = amkluver	DESIGNED -	REVISED -	
	CHECKED -	REVISED -	
PLOT SCALE = NTS	DRAWN -	REVISED -	
PLOT DATE = 6/23/2023	CHECKED -	REVISED -	

STATE OF ILLINOIS
DEPARTMENT OF TRANSPORTATION

EXISTING PLANS
STRUCTURE NO. 099-0301 & 099-0302

SHEET SE1-39 OF SE1-48 SHEETS

F.A.U. RTE.	SECTION	COUNTY	TOTAL SHEETS	SHEET NO.
I-80	FAI 80 21 STRUCTURE 6	WILL	898	597
		CONTRACT NO. 62R27		
		ILLINOIS FED. AID PROJECT		

GENERAL NOTES

1. Calculated weight of Structural Steel AASHTO M270 Gr. 36 = 27,290 Pounds. (See Note 7 Sheet 8.)
   Calculated weight of Structural Steel Connections = 5,830 Pounds. (See Note 8 Sheet 8.)
   Total, paid as Furnishing and Erecting Structural Steel = 33,120 Pounds.
2. Structural steel plates may be AASHTO M270 Grade 36.
3. No field welding is permitted except as specified in the contract documents.
4. Reinforcement bars designated (E) shall be epoxy coated.
5. Plan dimensions and details relative to existing plans are subject to nominal construction variations. The Contractor shall field verify existing dimensions and details affecting new construction and make necessary approved adjustments prior to construction or ordering of materials. Such variations shall not be cause for additional compensation for a change in scope of the work, however, the Contractor will be paid for the quantity actually furnished at the unit price bid for the work.
6. Concrete Sealer shall be applied to the concrete facing. Concrete Sealer limits shall extend from the bottom of Concrete facing at the front face to the top and return over the top and down 1'-6" on the rear face.
7. Backfill limits of excavation within 2'-0" of structures and beneath roadway with compacted Granular Backfill for Structures, paid as Granular Backfill for Structures. Remaining backfill outside those limits shall be provided as directed by Engineer and according to Section 502 of the Standard Specifications. Remaining backfill associated with Structure Excavtion shall be included in the cost of Structure Excavation.
8. The Contractor is responsible for the design and performance of the lagging using no less than a 3 in. nominal rough-sawn thickness and timber with a minimum allowable bending stress of 1000 psi.
9. The Concrete Facing shall be poured before all final grading work behind and above the wall are complete.
10. Any removal of the existing slope wall or excavation and backfill beyond limits noted to complete grading or installation of the proposed retaining wall is included in the cost of Slope Wall Removal and Micropiles, Lateral. Removal shall be approved by the engineer.

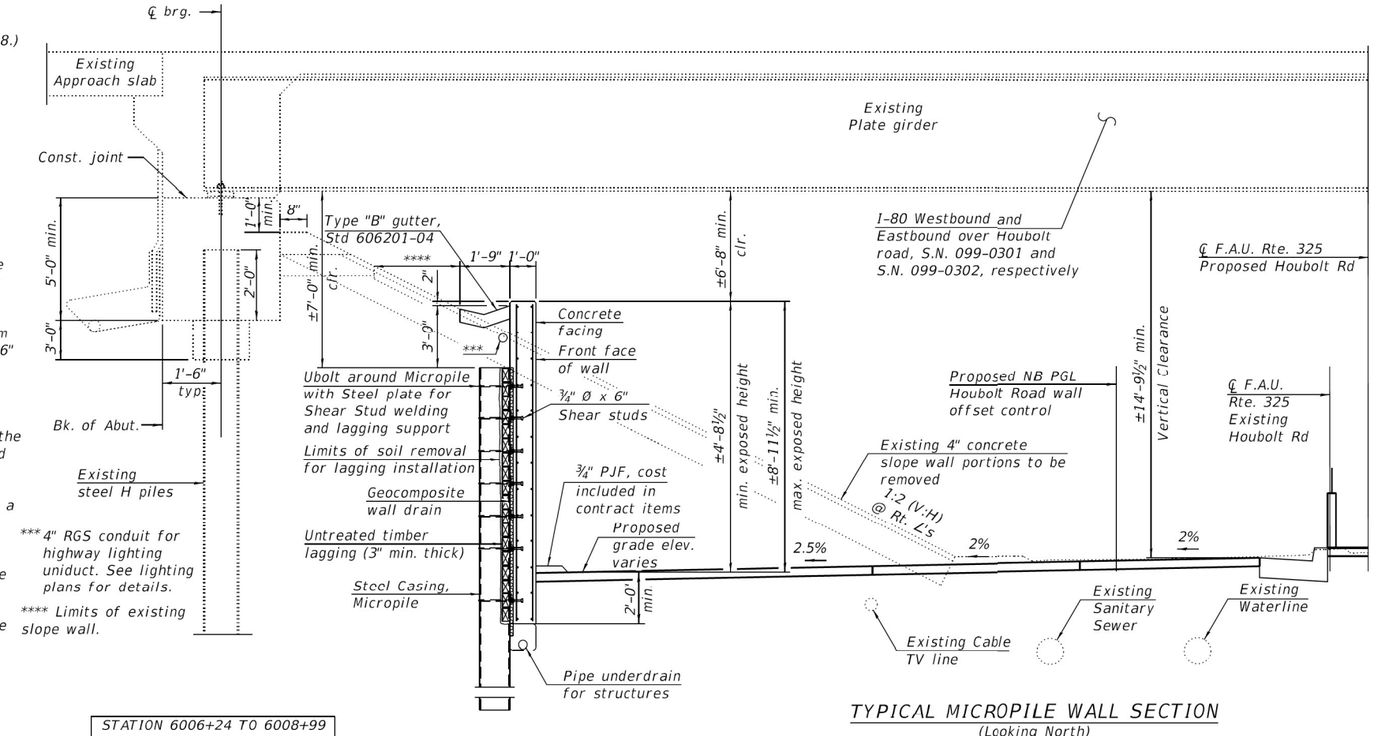

TYPICAL MICROPILE WALL SECTION
(Looking North)

LATERAL DESIGN LOADS	
Elevation	Equivalent Fluid Pressure
594.00 to 580.00	49.2 psf
580.00 to 567.00	39.2 psf

Notes:
1. Lateral design loads are reported as service Equivalent Fluid Pressure loads.
2. Maximum allowable deflection at top of pile is 1 inch under lateral design loads.

STATION 6006+24 TO 6008+99
BUILT 202X BY
ILLINOIS DEPARTMENT OF TRANSPORTATION
FAU 325 SECTION
16-00503-00-PV
STRUCTURE NO. 099-6302

NAME PLATE
See Std. 515001

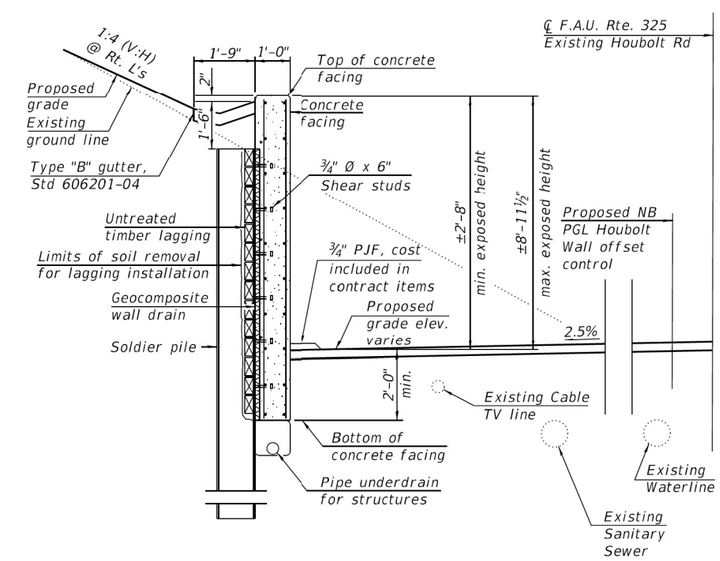

TYPICAL DRIVEN SOLDIER PILE WALL SECTION
(Looking North)

WALL GEOMETRY CONTROL TABLE - S.N. 099-6302							
Wall Location	Wall Type	Control Point	Station Alignment	** Offset LT, ft	Elevation Top of Concrete Facing, ft	Panel Point Spacing, ft	Joint, E=Exp., C=Constr.
Begin Wall	Driven Soldier Pile	1	6006+24.5	52.03	584.28	15.00	C
Kink	Driven Soldier Pile	2	6006+35.91	43.75	586.46	15.00	C
Kink	Driven Soldier Pile	3	6006+48.51	37.48	588.71	15.00	C
Kink	Driven Soldier Pile	4	6006+61.99	33.38	589.71	15.00	E
Kink	Driven Soldier Pile	5	6006+75.98	31.69	589.96	21.13	C
Kink	Driven Soldier Pile	6	6006+95.86	31.69	589.96	14.19	C
Kink	Micro Pile	7	6007+09.81	31.50	589.71	25.00	E
Kink	Micro Pile	8	6007+35.59	30.60	588.71	30.00	C
Kink	Driven Soldier Pile	9	6007+66.5	29.38	587.96	30.00	E
Kink	Driven Soldier Pile	10	6007+97.16	28.17	587.46	15.00	C
Kink	Micro Pile	11	6008+12.15	27.88	587.46	15.00	E
Kink	Micro Pile	12	6008+27.15	27.58	587.46	30.00	C
Kink	Micro Pile	13	6008+57.15	27.58	587.46	12.75	C
Kink	Driven Soldier Pile	14	6008+69.91	27.58	587.46	30.00	E
End Wall		15	6008+99.91	27.58	587.14	*283.06	C

* Total Wall Length

** Offset measured from NB PGL.

TOTAL BILL OF MATERIAL

ITEM	UNIT	TOTAL
Slope Wall Removal	Sq Yd	187
Structure Excavation	Cu Yd	240
Concrete Structures	Cu Yd	133
Furnishing and Erecting Structural Steel	Pounds	33,120
Stud Shear Connectors	Each	1,359
Reinforcement Bars, Epoxy Coated	Pound	7,510
Name Plate	Each	1
Furnishing Soldier Piles (HP Section)	Foot	1,053
Driving Soldier Piles	Foot	1,053
Untreated Timber Lagging	Sq Ft	2,193
Concrete Sealer	Sq Ft	3,427
Granular Backfill for Structures	Cu Yd	33
Geocomposite Wall Drain	Sq Yd	230
Concrete Gutter, Type B	Foot	308
Micropiles - Wall	Each	37
Pipe Underdrains for Structures 4"	Foot	330

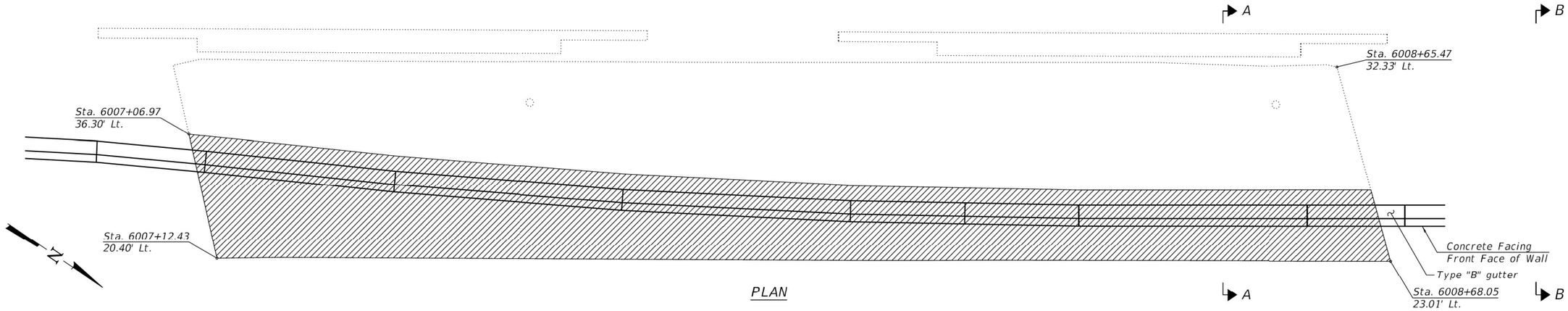

PLAN

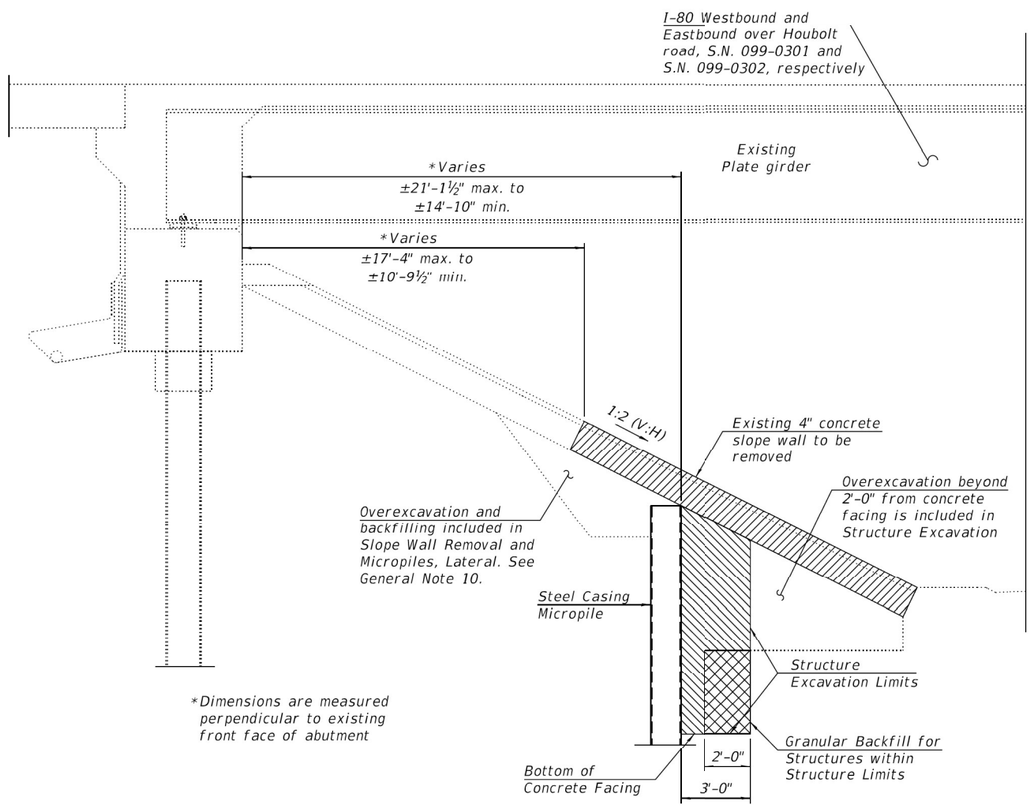

SECTION A-A
(Looking North)

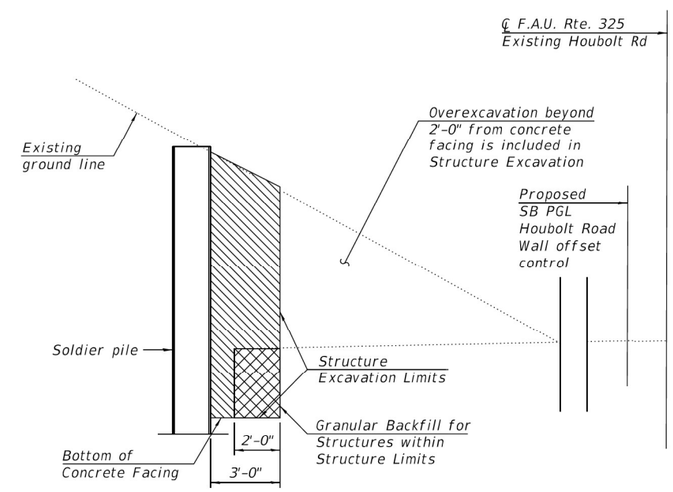

SECTION B-B
(Looking North)

LEGEND

- Slope Wall Removal
- Structure Excavation
- Granular Backfill for Structures

BILL OF MATERIAL

ITEM	UNIT	TOTAL
Slope Wall Removal	SQ YD	187
Structure Excavation	Cu Yd	240
Granular Backfill for Structures	Cu Yd	33

FILE NAME = S:\JOB\44400--44999\44700\001\Micros\CAD_Sheets\0010-XXX-XXXX_7003-REMOVAL.dgn

STRAND ASSOCIATES®
1170 SOUTH HOUBOLT ROAD
JOLIET, ILLINOIS 60431
(815) 744-4200
IDFPR NO. 184-001273

USER NAME = AlexSc	DESIGNED - BRL	REVISED -	
	CHECKED - AJS	REVISED -	
PLOT SCALE =	DRAWN - BJF	REVISED -	
PLOT DATE = 7/9/2021	CHECKED - BRL	REVISED -	

STATE OF ILLINOIS
DEPARTMENT OF TRANSPORTATION

REMOVAL PLAN
STRUCTURE NO. 099-6302
SHEET NO. 3 OF 16 SHEETS

F.A.U. RTE.	SECTION	COUNTY	TOTAL SHEETS	SHEET NO.
325	16-00503-00-PV	WILL	782	606
		CONTRACT NO. 2584-1021		
		ILLINOIS FED. AID PROJECT		

MODEL: Drawing Views
FILE NAME: pw://transystems-pw.bentley.com:transyscorp-pw1-hosted/Documents/Projects_2018/CH401/401180022/02-TranSystems/CAD/62R27/Sheets/23-Structural/099-0301 & 099-0302 Existing/0990301EX-62R27-001-Existing Plans 41.dgn

TRANSYSTEMS

USER NAME = amkluver	DESIGNED -	REVISED -	
	CHECKED -	REVISED -	
PLOT SCALE = NTS	DRAWN -	REVISED -	
PLOT DATE = 6/23/2023	CHECKED -	REVISED -	

STATE OF ILLINOIS
DEPARTMENT OF TRANSPORTATION

EXISTING PLANS
STRUCTURE NO. 099-0301 & 099-0302
SHEET SE1-41 OF SE1-48 SHEETS

F.A.I. RTE.	SECTION	COUNTY	TOTAL SHEETS	SHEET NO.
I-80	FAI 80 21 STRUCTURE 6	WILL	898	599
		CONTRACT NO. 62R27		
		ILLINOIS FED. AID PROJECT		

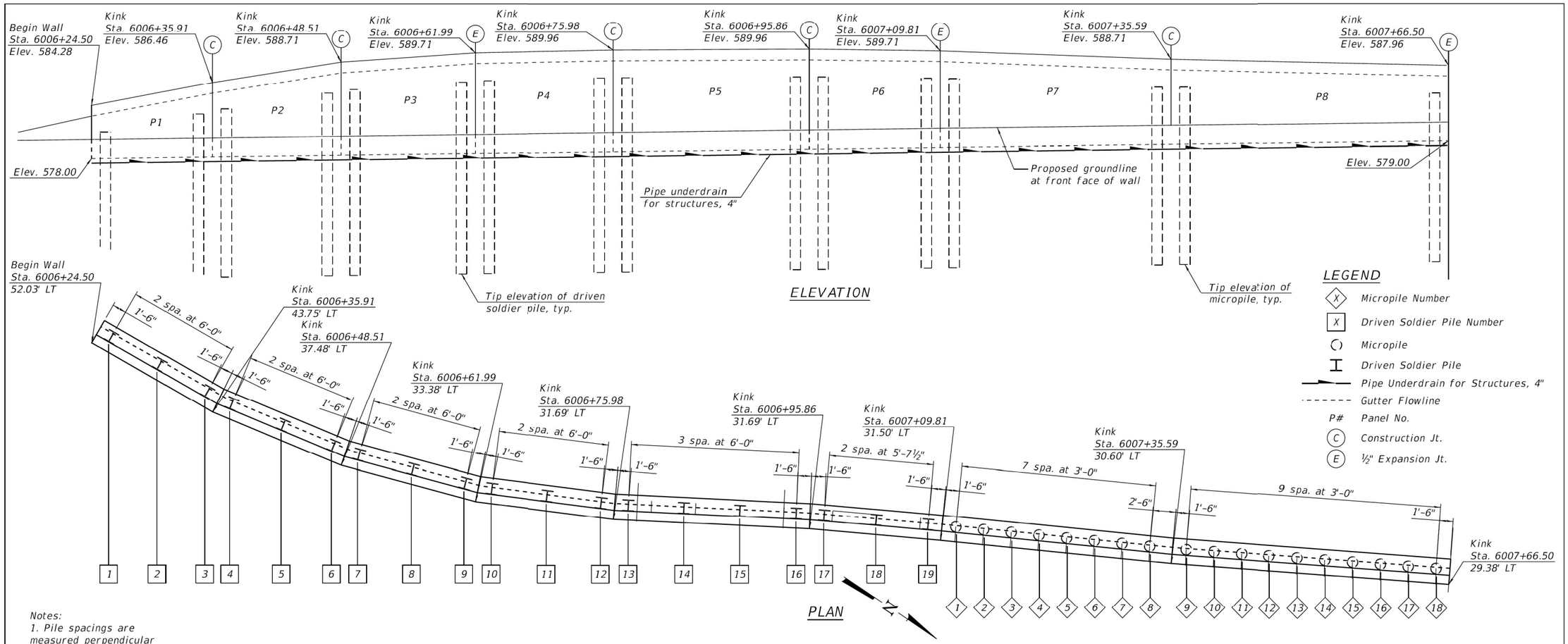

Notes:
1. Pile spacings are measured perpendicular to the rear face of the concrete facing.
2. Stations and offsets shown in plan and elevation drawings are to front face of concrete facing.

MICROPILE SUMMARY TABLE 1 - SN 099-6302

Pile Number	Station at Centerline of Pile	Offset to Centerline of Pile, ft	Panel Number	Micropile Designation O.D. Casing, inches	Minimum Required Section, inches	Micropile Length, ft	Bottom Pile Tip Elevation, ft	Top Pile Elevation, ft	# of Stud Shear Connectors
1	6007+11.40	-33.12	7	11.875	55.29	31.00	555.71	586.71	36.00
2	6007+14.50	-33.04	7	11.875	55.29	31.00	555.71	586.71	36.00
3	6007+17.60	-32.94	7	11.875	55.29	31.00	555.71	586.71	36.00
4	6007+20.70	-32.84	7	11.875	55.29	31.00	555.71	586.71	36.00
5	6007+23.80	-32.73	7	11.875	55.29	31.00	555.71	586.71	36.00
6	6007+26.90	-32.61	7	11.875	55.29	31.00	555.71	586.71	36.00
7	6007+30.00	-32.48	7	11.875	55.29	31.00	555.71	586.71	36.00
8	6007+32.32	-32.38	7	11.875	55.29	31.00	555.71	586.71	36.00
9	6007+37.18	-32.18	8	11.875	55.29	30.00	555.71	585.71	32.00
10	6007+40.28	-32.10	8	11.875	55.29	30.00	555.71	585.71	32.00
11	6007+43.38	-32.01	8	11.875	55.29	30.00	555.71	585.71	32.00
12	6007+46.48	-31.90	8	11.875	55.29	30.00	555.71	585.71	32.00
13	6007+49.57	-31.79	8	11.875	55.29	30.00	555.71	585.71	32.00
14	6007+52.67	-31.67	8	11.875	55.29	30.00	555.71	585.71	32.00
15	6007+55.76	-31.54	8	11.875	55.29	30.00	555.71	585.71	32.00
16	6007+58.66	-31.40	8	11.875	55.29	30.00	555.71	585.71	32.00
17	6007+61.95	-31.25	8	11.875	55.29	30.00	555.71	585.71	32.00
18	6007+65.04	-31.09	8	11.875	55.29	30.00	555.71	585.71	32.00

DRIVEN SOLDIER PILE SUMMARY TABLE 1 - SN 099-6302

Pile Number	Station at Centerline of Pile	Offset to Centerline of Pile, ft	Panel Number	Driven Soldier Pile, HP Size	Minimum Required Section, inches3	Driven Soldier Pile Length, ft	Bottom Pile Tip Elevation, ft	Top Pile Elevation, ft	# of Stud Shear Connectors
1	6006+26.45	52.51	1	HP14x89	131.0	30.0	554.79	584.79	8
2	6006+30.99	49.18	1	HP14x89	131.0	30.0	554.79	584.79	8
3	6006+35.50	45.95	1	HP14x89	131.0	30.0	554.79	584.79	8
4	6006+37.85	44.53	2	HP14x89	131.0	33.0	554.04	587.04	11
5	6006+42.85	42.00	2	HP14x89	131.0	33.0	554.04	587.04	11
6	6006+47.79	39.58	2	HP14x89	131.0	33.0	554.04	587.04	11
7	6006+50.34	38.57	3	HP14x89	131.0	33.0	555.04	588.04	11
8	6006+55.70	36.91	3	HP14x89	131.0	33.0	555.04	588.04	11
9	6006+60.96	35.34	3	HP14x89	131.0	33.0	555.04	588.04	11
10	6006+63.64	34.78	4	HP14x89	131.0	33.0	555.29	588.29	11
11	6006+69.21	34.07	4	HP14x89	131.0	33.0	555.29	588.29	11
12	6006+74.70	33.44	4	HP14x89	131.0	33.0	555.29	588.29	11
13	6006+77.46	33.27	5	HP14x89	131.0	33.0	555.29	588.29	11
14	6006+83.08	33.20	5	HP14x89	131.0	33.0	555.29	588.29	11
15	6006+88.71	33.20	5	HP14x89	131.0	33.0	555.29	588.29	11
16	6006+94.41	33.27	5	HP14x89	131.0	33.0	555.29	588.29	11
17	6006+97.25	33.27	6	HP14x89	131.0	33.0	555.29	588.29	11
18	6007+02.52	33.20	6	HP14x89	131.0	33.0	555.29	588.29	11
19	6007+08.29	33.16	6	HP14x89	131.0	33.0	555.29	588.29	11

STRAND ASSOCIATES®
1170 SOUTH HOUBOLT ROAD
JOLIET, ILLINOIS 60431
(815) 744-4200
IDFPR NO. 184-001273

USER NAME = AlexSc	DESIGNED - BRL	REVISED -	
	CHECKED - AJS	REVISED -	
PLOT SCALE =	DRAWN - BJF	REVISED -	
PLOT DATE = 7/9/2021	CHECKED - BRL	REVISED -	

STATE OF ILLINOIS
DEPARTMENT OF TRANSPORTATION

WALL PLAN AND ELEVATION - 1
STRUCTURE NO. 099-6302
SHEET NO. 4 OF 16 SHEETS

F.A.U. RTE.	SECTION	COUNTY	TOTAL SHEETS	SHEET NO.
325	16-00503-00-PV	WILL	782	607
		CONTRACT NO. 2584-1021		
		ILLINOIS FED. AID PROJECT		

TRANSYSTEMS

USER NAME = amkluver	DESIGNED -	REVISED -	
	CHECKED -	REVISED -	
PLOT SCALE = NTS	DRAWN -	REVISED -	
PLOT DATE = 6/23/2023	CHECKED -	REVISED -	

STATE OF ILLINOIS
DEPARTMENT OF TRANSPORTATION

EXISTING PLANS
STRUCTURE NO. 099-0301 & 099-0302
SHEET SE1-42 OF SE1-48 SHEETS

F.A.I. RTE.	SECTION	COUNTY	TOTAL SHEETS	SHEET NO.
I-80	FAI 80 21 STRUCTURE 6	WILL	898	600
		CONTRACT NO. 62R27		
		ILLINOIS FED. AID PROJECT		

FILE NAME = S:\JOL\14080-4499\14780\001\Micros\CAD_Sheets\0010-XXX-XXXX_7004-WALLPLN.dgn

MODEL: Drawing Views
FILE NAME: pw://transystems-pw.bentley.com:transyscorp-pw1-hosted/Documents/Projects_2018/CH401/401180022/02-TranSystems/CAD/62R27/Sheets/23-Structural/099-0301 & 099-0302 Existing/0990301EX-62R27-001-Existing Plans 42.dgn