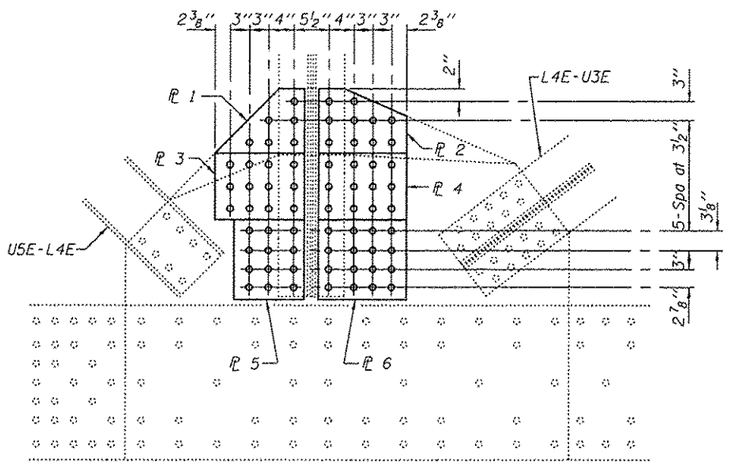

REPAIR 6 ELEVATION

Span 5 at L4E

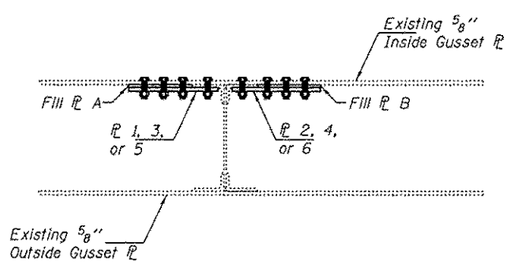

REPAIR 6 PLAN

Span 5 at L4E

Note:
For Repair 6 locations, the Contractor shall field measure the existing plates and determine the actual locations of the existing rivets prior to ordering or fabricating any plates. Any discrepancies from the plans or existing shop plans shall be brought to the attention of the Engineer prior to fabrication.

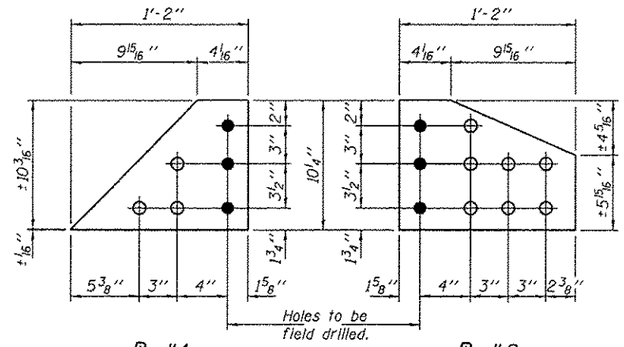

PL #1

PL 5/8" x 10 1/4" x 1'-2"
(1-Required)

PL #2

PL 5/8" x 10 1/4" x 1'-2"
(1-Required)

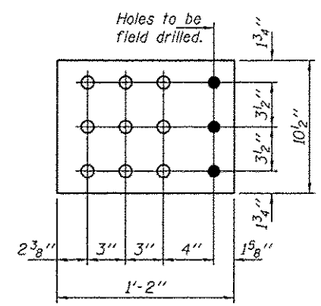

PL #3 & #4

PL 5/8" x 10 1/2" x 1'-2"
(2-Required)

LEGEND

○ - Holes to be drilled in shop.

● - Holes to be field drilled.

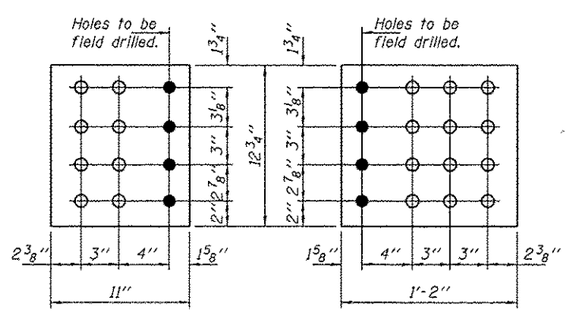

PL #5

PL 5/8" x 12 3/4" x 11"
(1-Required)

PL #6

PL 5/8" x 12 3/4" x 1'-2"
(1-Required)

SCOPE OF WORK AT L4E IN SPAN 5

1. Clean and prepare the existing surfaces at the repair area.
2. For the installation of PL #1, carefully remove the 3 existing rivets at the location where the plate is to be attached, prior to installing the Fill PL and PL #1.
3. Use the 3 existing rivet holes as a template for drilling the 3 holes in PL #1.
4. Install PL #1 with 3 bolts placed through the existing rivet holes. Install nuts and tighten fully.
5. Completely install all the remaining bolts & nuts in PL #1, prior to beginning work on the installation of PL #2.
6. Install PL #2, by repeating the steps outlined in Steps 2 thru 5.
7. After completing the installation of PL #2, proceed to installing PL #3, by repeating the steps outlined in Steps 2 thru 5.
8. After completing the installation of PL #3, proceed to installing PL #4, by repeating the steps outlined in Steps 2 thru 5.
9. After completing the installation of PL #4, proceed to installing PL #5. First, remove the 2 upper most rivets and then immediately place 2 bolts in these existing holes. Second, proceed to remove the 2 lower rivets and then immediately place 2 bolts in these existing holes. Third, proceed to install PL #5 and the remainder of bolts & nuts.
10. After completing the installation of PL #5, proceed to installing PL #6. First, remove the 2 upper most rivets and then immediately place 2 bolts in these existing holes. Second, proceed to remove the 2 lower rivets and then immediately place 2 bolts in these existing holes. Third, proceed to install PL #6 and the remainder of bolts & nuts.
11. Paint the repair area.

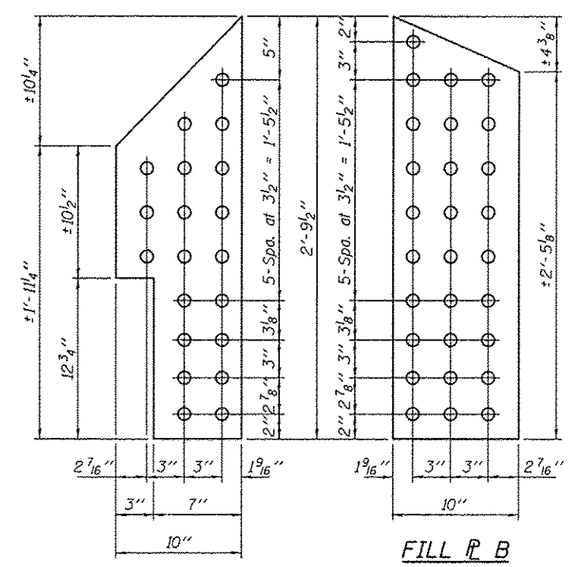

FILL PL A

PL 7/16" x 10" x 2'-9 1/2"
(1-Required)

FILL PL B

PL 7/16" x 10" x 2'-9 1/2"
(1-Required)

BILL OF MATERIAL

ITEM	UNIT	QUANTITY
Structural Steel Repair	Pound	330

DESIGNED - MKC	EXAMINED	ACTING ENGINEER OF STRUCTURAL SERVICES	DATE - JULY 26, 2012
CHECKED - VP			
DRAWN - Kyle M. Steffen	PASSED	ACTING ENGINEER OF BRIDGES AND STRUCTURES	REVISED
CHECKED - MKC VP			REVISED

STATE OF ILLINOIS
DEPARTMENT OF TRANSPORTATION

REPAIR 6 ON SPAN 5 AT L4E
SN 062-0036

SHEET NO. 6 OF 10 SHEETS

F.A.S. RTE.	SECTION	COUNTY	TOTAL SHEETS	SHEET NO.
2369	(104B-D)1	MARSHALL	17	13
		CONTRACT NO. 68B16		
		ILLINOIS FED. AID PROJECT		