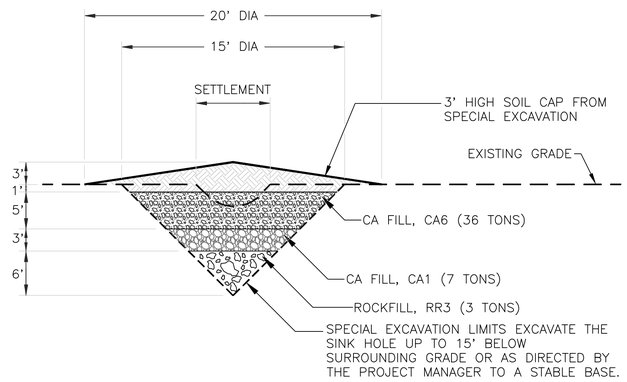

A/9 SINK HOLE FILLING DETAIL
NOT TO SCALE

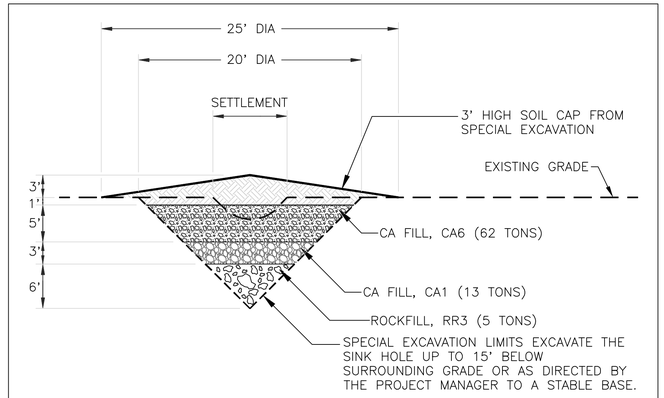

B/9 SINK HOLE FILLING DETAIL
NOT TO SCALE

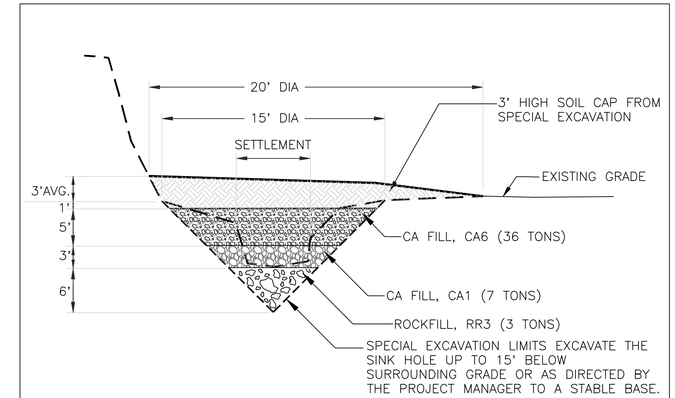

C/9 SINK HOLE FILLING DETAIL
NOT TO SCALE

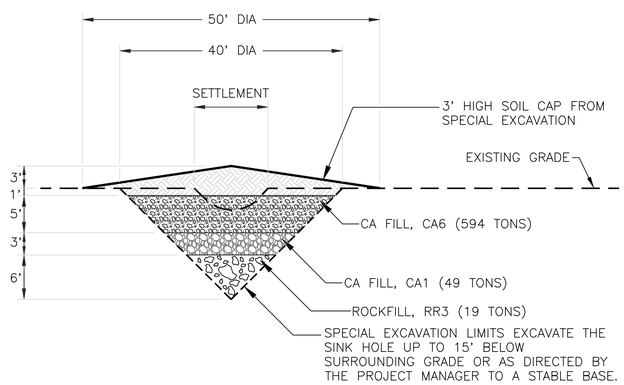

D/9 SINK HOLE FILLING DETAIL
NOT TO SCALE

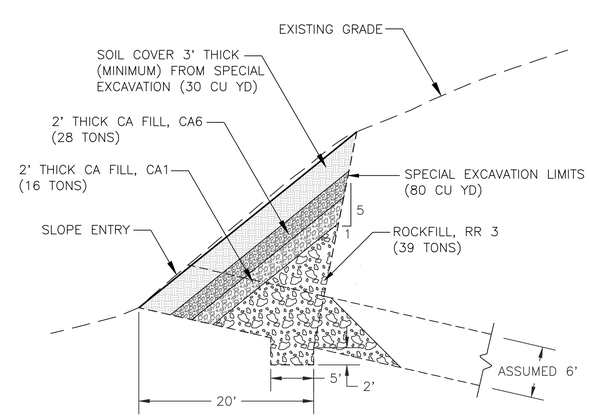

E/9 MOON CREEK SLOPE ENTRY FILLING DETAIL
SIDE VIEW NOT TO SCALE

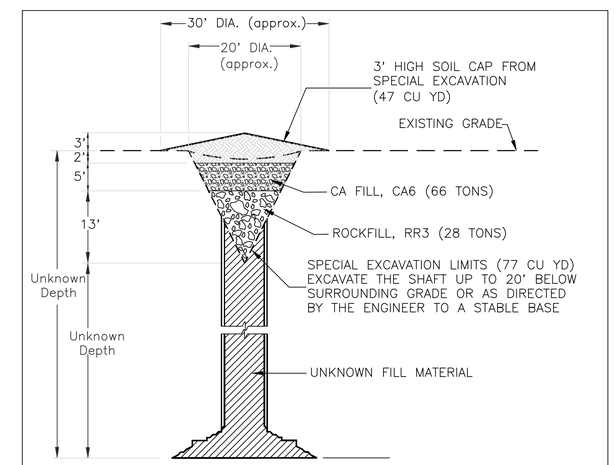

H/9 OLD SOWERBY SHAFT FILLING DETAIL
NOT TO SCALE

NOTE: REMOVE ALL TRASH AND DEBRIS FROM SHAFT TO A DEPTH OF 20' TO STABLE EXISTING FILL OR AS DIRECTED BY PROJECT ENGINEER. EXACT SHAFT LOCATION AND DIMENSIONS ARE UNKNOWN.

SINK HOLE	NORTHING	EASTING	DIMENSIONS (APPROXIMATE)	SPECIAL EXCAVATION	FILLING DETAIL
SH1	N1611914	E845647	20' x 10' x 6' DEEP	14 CU YD	B–9
SH2	N1612000	E845556	20' x 10' x 6' DEEP	14 CU YD	B–9
SH3	N1611919	E845590	12' x 8' x 5' DEEP	15 CU YD	A–9
SH4	N1611767	E845069	11' DIA. x 4' DEEP	28 CU YD	A–9
SH5	N1611826	E845110	20' x 12' x 7' DEEP	9 CU YD	B–9
SH6	N1611714	E845302	17' x 15' x 6' DEEP	2 CU YD	B–9
SH7	N1611660	E845252	12' DIA. x 7' DEEP	23 CU YD	A–9
SH8	N1611654	E845407	13' DIA. x 5' DEEP	25 CU YD	A–9
SH9	N1642096	E835250	15' DIA. x 10' DEEP	36 CU YD	C–9
SH10	N1641425	E834866	6' DIA. x 5' DEEP	31 CU YD	A–9
SH11	N1642222	E835468	30' DIA. x 5' DEEP	189 CU YD	D–9

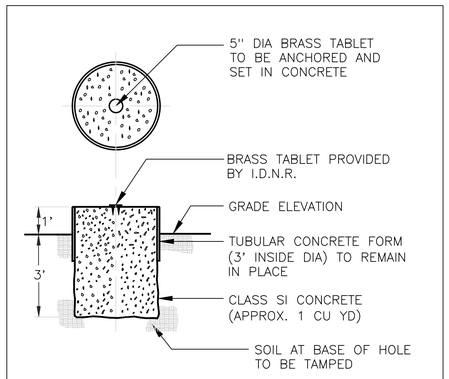

F/9 MINE OPENING MARKER DETAIL
NOT TO SCALE
EXACT LOCATION TO BE DETERMINED BY PROJECT MANAGER

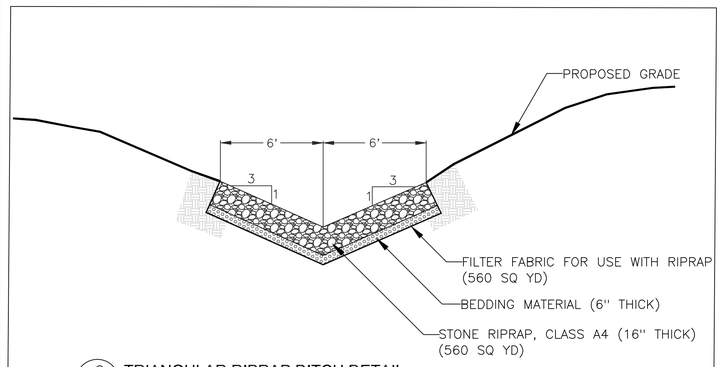

G/9 TRIANGULAR RIPRAP DITCH DETAIL
NOT TO SCALE

NOTE:
DUE TO THE UNKNOWN CONDITIONS THAT EXIST IN AND AROUND THE MINE OPENINGS, THE CONTRACTOR SHALL USE EXTREME CAUTION WHEN PERFORMING WORK NEAR THEM. THE ENGINEER RESERVES THE RIGHT TO INCREASE OR DECREASE THE QUANTITY FOR SPECIAL EXCAVATION AND BACKFILLING MATERIALS AS DETERMINED BY THE EXACT CONDITIONS ENCOUNTERED DURING SPECIAL EXCAVATION.

State of Illinois
Department of Natural Resources

Old Sowerby Mine Group
Reclamation Project
AML-GLsE-1804
LaSalle & Livingston Counties

Drawn By: B. Johnsrud Date: 07/2018
Drawn By: T. Faught 05/2019
Checked By: T. Faught 05/2019

Details

Sheet 9 of 9