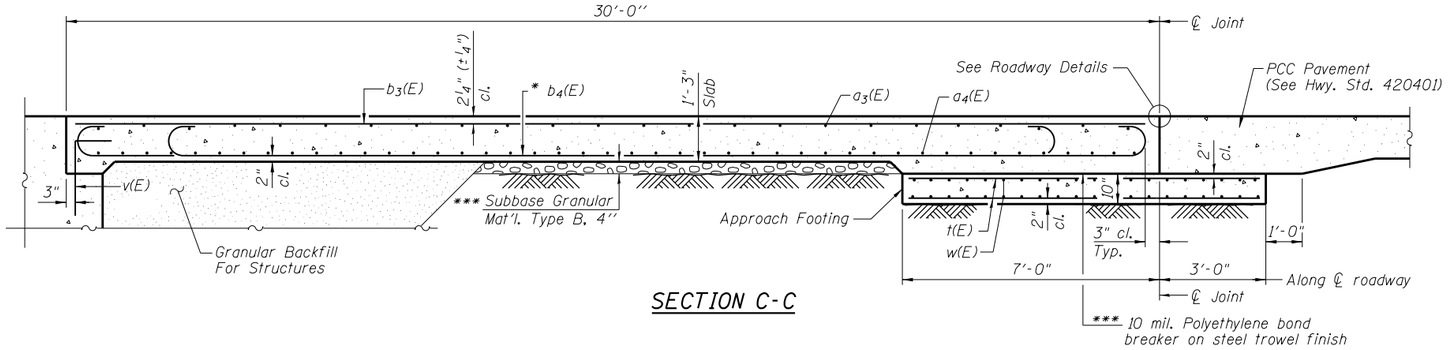

SECTION C-C

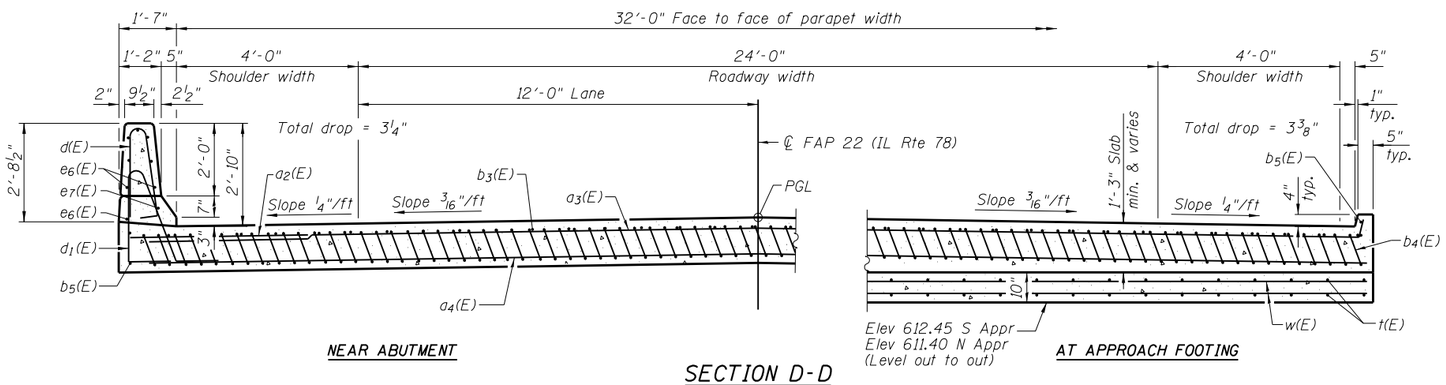

NEAR ABUTMENT

AT APPROACH FOOTING

SECTION D-D

(See Plan for dimensions not shown)

Notes:

See sheet 10 of 22 for Detail A and View B-B.
Approach slab and parapet concrete shall be paid for as Concrete Superstructure.
Approach footing concrete shall be paid for as Concrete Structures.
Reinforcement shall be paid for as Reinforcement Bars, Epoxy Coated.
For v(E) bar details, see sheet 8 of 22.
The approach footing maximum applied service bearing pressure (Qmax) = 2.0 ksf.
For bar splicer details, see sheet 21 of 22.
Cost of excavation for approach footing included with Concrete Structures.
For Granular Backfill For Structures and drainage treatment details, see sheet 2 of 22.
For additional parapet details, see sheet 8 of 22.
See Bridge Approach Detail sheet of Roadway Plans for joint detail at pavement connector.

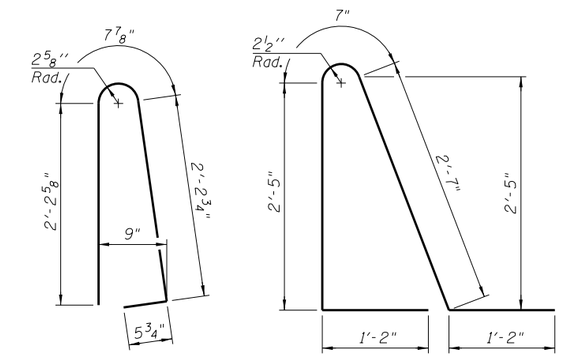

BAR d(E)

BAR d2(E)

* Tilt #9 b4(E) bars as required to maintain clearance.

*** Cost included with Concrete Superstructure.

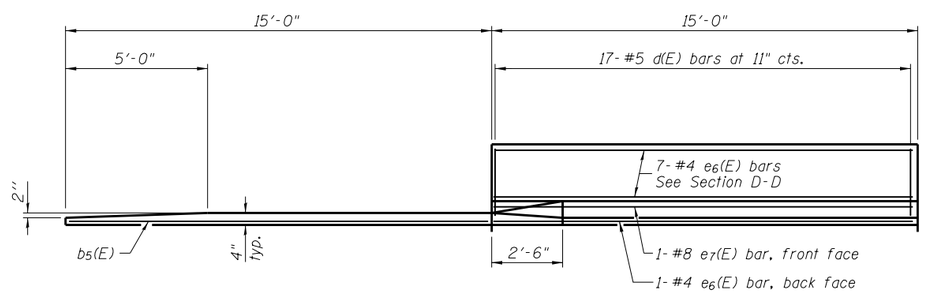

VIEW E-E

TWO APPROACHES
BILL OF MATERIAL

Bar	No.	Size	Length	Shape
a2(E)	48	#6	6'-6"	
a3(E)	50	#4	34'-0"	
a4(E)	92	#5	33'-6"	
b3(E)	56	#4	29'-8"	
b4(E)	162	#9	29'-9"	
b5(E)	8	#4	14'-8"	
d(E)	68	#5	5'-7"	
d2(E)	68	#5	7'-11"	
e6(E)	32	#4	14'-8"	
e7(E)	4	#8	14'-8"	
t(E)	140	#4	9'-8"	
w(E)	80	#5	33'-6"	
Concrete Superstructure			Cu. Yd.	6.7
Concrete Superstructure (Approach Slab)			Cu. Yd.	99.0
Concrete Structures			Cu. Yd.	20.9
Reinforcement Bars, Epoxy Coated			Pound	27520
Bridge Deck Grooving			Sq. Yd.	198
Protective Coat			Sq. Yd.	238

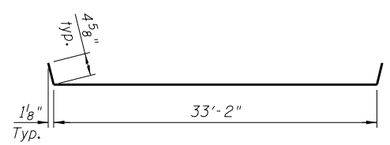

BAR a3(E)

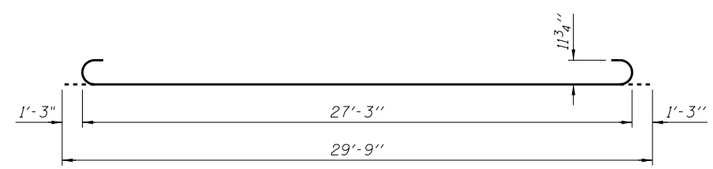

BAR b4(E)

BA-0 7-1-10

(Sheet 2 of 2)