LOCATION 17: I–90/I–94 (DAN RYAN EXPRESSWAY), WB

171′ EAST OF KING DR. OVERPASS, LEFT SIDE

T37N

R14E

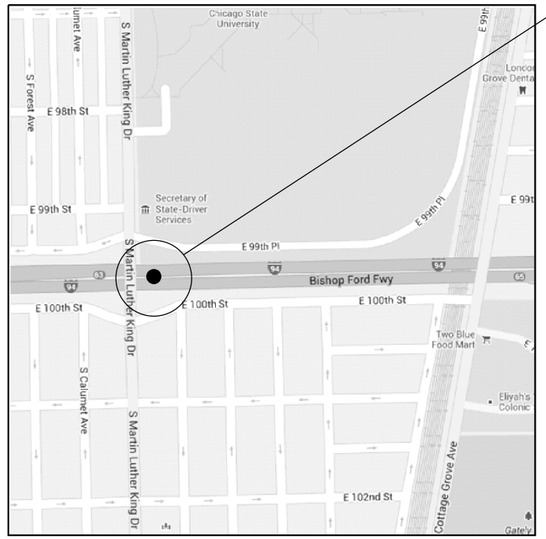

CITY OF CHICAGO
HYDE PARK TOWNSHIP
COOK COUNTY

HALF DEPTH REPAIR
REPLACE 18½′ OF BARRIER WALL
FOR MORE DETAILS, SEE SHEET #6

BILL OF MATERIAL

ITEM	UNIT	QUANTITY
CONCRETE REMOVAL	Cu. Yds.	0.3
CONCRETE STRUCTURE	Cu. Yds.	0.6
TIE BARS	Each	12
SAW CUTS	Foot	21
PROTECTIVE COAT	Sq. Yds.	3.9

TRAFFIC DATA:

SPEED LIMIT: 55 MPH
2012 ADT: 153900

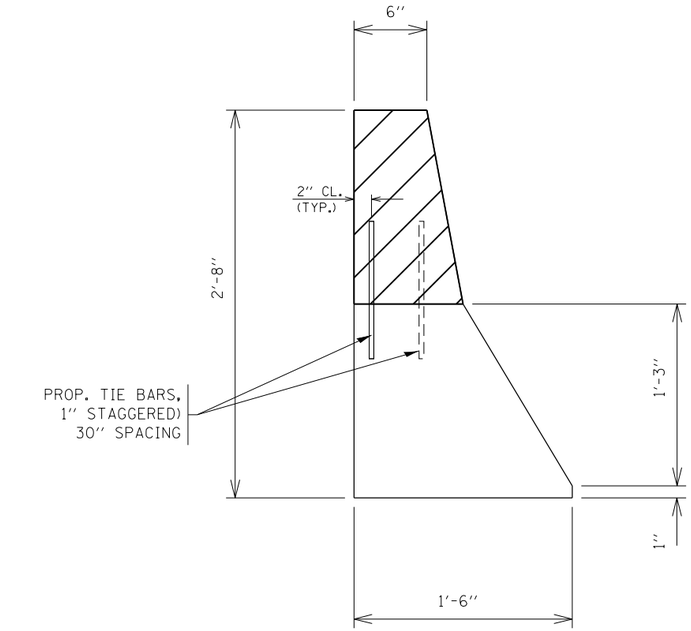

SECTION

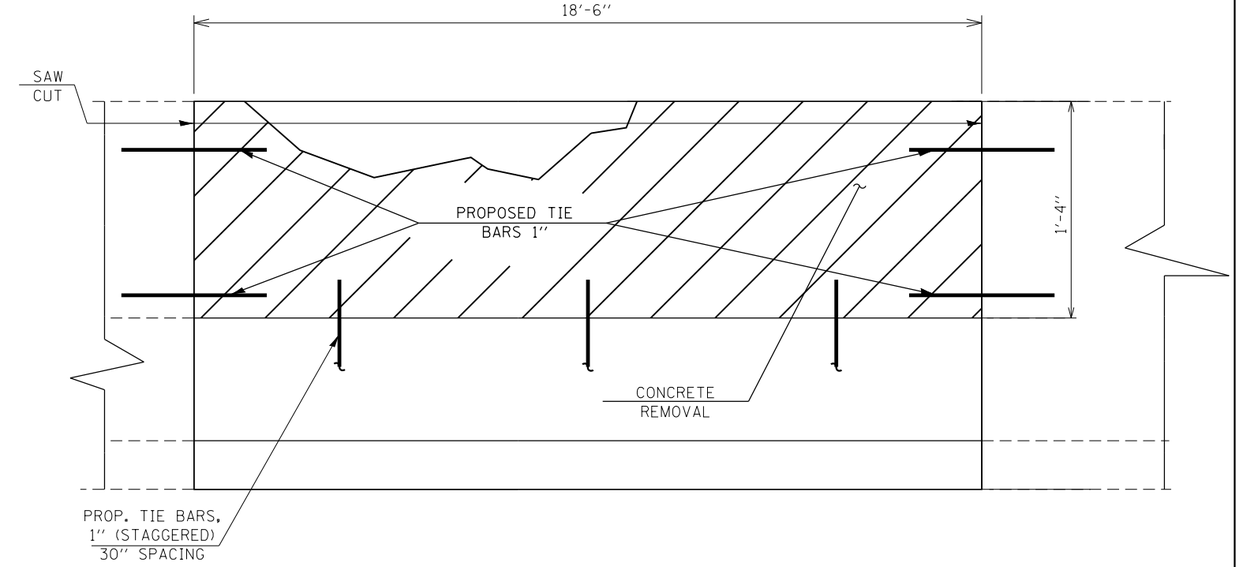

ELEVATION

FILE NAME = c:\pw_work\pwidot\seymorecp\d0348982\D189013-sht-plan.dgn	USER NAME = SEYMORECP	DESIGNED -	REVISED -
		DRAWN -	REVISED -
	PLOT SCALE = 100.0000 ′ / in.	CHECKED -	REVISED -
Default	PLOT DATE = 7/11/2013	DATE -	REVISED -

STATE OF ILLINOIS
DEPARTMENT OF TRANSPORTATION

LOCATION 17
I–90/I–94 (DAN RYAN EXPRESSWAY)

SCALE: SHEET OF SHEETS STA. TO STA.

F.A. RTE.	SECTION	COUNTY	TOTAL SHEETS	SHEET NO.
VAR.	2013-0411	VARIOUS	44	34

CONTRACT NO. 60W86

ILLINOIS FED. AID PROJECT