INDEX OF SHEETS

1	COVER SHEET
2	INDEX, HIGHWAY STANDARDS & GENERAL NOTES
3 - 9	SUMMARY OF QUANTITIES
10	TREE REMOVAL SCHEDULE
11 - 13	TYPICAL SECTIONS
14 - 17	ALIGNMENT, TIES & BENCHMARKS
18 - 30	ROADWAY AND PAVEMENT STRIPING PLANS
31 - 56	SOIL BORING LOGS
57 - 155	CROSS-SECTIONS
156	DETAILS FOR FRAMES AND LIDS ADJUSTMENT WITH MILLING
157	PAVEMENT PATCHING FOR HMA SURFACED PAVEMENT
158	CURB OR CURB AND GUTTER REMOVAL AND REPLACEMENT
159	BUTT JOINT AND HMA TAPER DETAILS
160	RUMBLE STRIPS FOR CENTERLINE, NON-FREEWAY
161	TRAFFIC CONTROL AND PROTECTION FOR SIDE ROADS, INTERSECTIONS, AND DRIVEWAYS
162	TYPICAL APPLICATIONS RAISED REFLECTIVE PAVEMENT MARKERS (SNOW-PLOW RESISTANT)
163	TYPICAL PAVEMENT MARKINGS
164	SHORT TERM PAVEMENT MARKING LETTERS AND SYMBOLS
165	ARTERIAL ROAD INFORMATION SIGN
166	DRIVEWAY ENTRANCE SIGNING

DISTRICT ONE STANDARDS

46	DETAILS FOR FRAMES AND LIDS ADJUSTMENT WITH MILLING (BD-08)
47	PAVEMENT PATCHING FOR HMA SURFACED PAVEMENT (BD-22)
48	CURB OR CURB AND GUTTER REMOVAL AND REPLACEMENT (BD-24)
49	BUTT JOINT AND HMA TAPER DETAILS (BD-32)
50	RUMBLE STRIPS FOR CENTERLINE, NON-FREEWAY (BD-55)
51	TRAFFIC CONTROL AND PROTECTION FOR SIDE ROADS, INTERSECTIONS, AND DRIVEWAYS (TC-10)
52	TYPICAL APPLICATIONS RAISED REFLECTIVE PAVEMENT MARKERS (SNOW-PLOW RESISTANCE) (TC-11)
53	TYPICAL PAVEMENT MARKINGS (TC-13)
55	SHORT TERM PAVEMENT MARKING LETTERS AND SYMBOLS (TC-16)
56	ARTERIAL ROAD INFORMATION SIGN (TC-22)
57	DRIVEWAY ENTRANCE SIGNING (TC-26)

HIGHWAY STANDARDS

000001-08	STANDARD SYMBOLS, ABBREVIATIONS AND PATTERNS
442201-03	CLASS C AND D PATCHES
482001-02	HMA SHOULDER ADJACENT TO FLEXIBLE PAVEMENT
482011-03	HMA SHLD. STRIPS / SHLDS. WITH RESURFACING OR WIDENING AND RESURFACING PROJECTS
606301-04	PC CONCRETE ISLANDS AND MEDIANS
606306-04	CORRUGATED PC CONCRETE MEDIANS
630001-13	STEEL PLATE BEAM GUARDRAIL
642006-01	SHOULDER RUMBLE STRIPS, 8 IN
701006-05	OFF-RD OPERATIONS, 2L, 2W, 15' TO 24" FROM PAVEMENT EDGE
701011-04	OFF-RD MOVING OPERATIONS 2L, 2W, DAY ONLY
701201-05	LANE CLOSURE, 2L 2W, DAY ONLY, FOR SPEEDS ≥ 45 MPH
701301-04	LANE CLOSURE, 2L, 2W, SHORT TIME OPERATIONS
701306-04	LANE CLOSURE, 2L, 2W, SLOW MOVING OPERATIONS DAY ONLY, FOR SPEEDS ≥ 45 MPH
701311-03	LANE CLOSURE 2L, 2W MOVING OPERATIONS - DAY ONLY
701326-04	LANE CLOSURE, 2L, 2W, PAVEMENT WIDENING FOR SPEEDS ≥ 45 MPH
701336-07	LANE CLOSURE, 2L, 2W, WORK AREAS IN SERIES FOR SPEEDS ≥ 45 MPH
701701-10	URBAN LANE CLOSURE, MULTILANE INTERSECTION
701901-10	TRAFFIC CONTROL DEVICES
725001-01	OBJECT AND TERMINAL MARKERS
780001-05	TYPICAL PAVEMENT MARKINGS
781001-04	TYPICAL APPLICATIONS RAISED REFLECTIVE PAVEMENT MARKERS

GENERAL NOTES

1. BEFORE STARTING ANY EXCAVATION, THE CONTRACTOR SHALL CALL "JULIE" AT (800) 892-0123 OR 811 FOR FIELD LOCATIONS OF BURIED ELECTRIC, TELEPHONE AND GAS FACILITIES, (48 HOURS NOTIFICATION IS REQUIRED).

2. THE CONTRACTOR WILL NOT BE ALLOWED TO SET UP A YARD OR FIELD OFFICE ON STATE PROPERTY WITHOUT WRITTEN PERMISSION FROM THE DEPARTMENT.

3. ALL MILLED SURFACES SHALL BE A UNIFORM CROSS SLOPE PER LANE AND FREE OF RIDGES BETWEEN PASSES. ANY DEVIATIONS SHALL BE CORRECTED AT NO COST TO THE DEPARTMENT.

4. ALL PAVEMENT PATCHING LOCATIONS SHALL BE DETERMINED BY THE ENGINEER AT THE TIME OF CONSTRUCTION.

5. PAVEMENT MARKINGS SHALL BE PLACED THROUGHOUT THE IMPROVEMENT ACCORDING TO THE DISTRICT 1 TYPICAL PAVEMENT MARKINGS. ALL NO-PASSING ZONE CENTERLINE PAVEMENT MARKINGS SHALL MATCH NO-PASSING ZONE SIGNAGE PENNANT LOCATIONS.

6. PAVEMENT MARKING TAPE, TYPE IV SHALL BE USED FOR SHORT TERM PAVEMENT MARKING ON ALL FINAL SURFACES.

7. IT SHALL BE THE CONTRACTOR'S RESPONSIBILITY TO VERIFY ALL DIMENSIONS AND CONDITIONS EXISTING IN THE FIELD PRIOR TO CONSTRUCTION AND ORDERING OF MATERIALS.

8. BUTT JOINTS SHALL BE INSTALLED AT THE ENDS OF ALL RESURFACING (WHERE RESURFACING MEETS EXISTING PAVEMENT) ACCORDING TO THE "BUTT JOINT AND HOT-MIX ASPHALT TAPER DETAILS".

9. THE CONTRACTOR SHALL BE REQUIRED TO KEEP A RECORD OF THE LOCATIONS OF THE BURIED STRUCTURES ACCORDING TO THE STATION AND DISTANCE LEFT OR RIGHT OF THE CENTERLINE OF PAVEMENT. UPON COMPLETION OF THE WORK, THE CONTRACTOR SHALL DELIVER THE RECORD TO THE ENGINEER.

10. THE RESIDENT ENGINEER SHALL CONTACT ERIC CAMPOS, AREA TRAFFIC FIELD ENGINEER AT ERIC.CAMPOS@ILLINOIS.GOV A MINIMUM OF TWO (2) WEEKS PRIOR TO THE PLACEMENT OF PERMANENT PAVEMENT MARKINGS.

12. BEFORE BEGINNING ANY WORK, THE CONTRACTOR SHALL RETAIN AND RECORD, FOR FUTURE REFERENCE, ALL EXISTING PAVEMENT MARKING LINES (AND RAISED REFLECTIVE PAVEMENT MARKERS) IN ORDER THAT THESE LOCATIONS BE RE-ESTABLISHED FOR STRIPING. EXACT LOCATIONS OF ALL PAVEMENT MARKINGS SHALL BE AS DIRECTED BY THE ENGINEER.

13. THE CONTRACTOR SHALL BE REQUIRED TO KEEP A RECORD OF THE LOCATIONS OF PLATED STRUCTURES BY STATION AND OFFSET LEFT OR RIGHT OF THE CENTERLINE OF THE PAVEMENT.

14. THE CONTRACTOR SHALL CONTACT KALPANA KANNAN-HOSADURGA, THE DISTRICT ONE TRAFFIC CONTROL SUPERVISOR, AT KALPANA.KANNAN-HOSADURGA@ILLINOIS.GOV A MINIMUM OF 72 HOURS IN ADVANCE OF BEGINNING WORK.

15. ALL GUARDRAIL REMOVAL AND REPLACEMENT LOCATIONS SHALL BE DETERMINED BY THE ENGINEER.

16. THE AGGREGATE GRADATION FOR THE AGGREGATE SUBGRADE IMPROVEMENT 12" LOWER LIFT SHALL BE CS 1 OR RR 1.

17. DROP-OFFS ADJACENT TO THE TRAVEL LANE SHALL BE KEPT TO A MINIMUM. PROTECTION OF THE DROP-OFF SHALL BE ACCORDING TO THE IDOT BUREAU OF SAFETY PROGRAMS AND ENGINEERING, SAFETY ENGINEERING POLICY MEMORANDUM 4-21. DROP-OFFS GREATER THAN OR EQUAL TO 12" AT LOCATIONS WHERE THE DROP-OFF IS LOCATED WITHIN 8 FT OF THE EDGE OF THE TRAVEL LANE SHALL BE BACKFILLED IN ACCORDANCE WITH TABLE 2, CONDITION II OF THE SAFETY 4-21 POLICY. THE CONTRACTOR SHALL BE RESPONSIBLE FOR ENSURING THAT THE DROP-OFF AREAS MEET THE OFFSET, HEIGHT, AND DURATION REQUIREMENTS TO USE BARRICADES AT THE END OF EACH WORKDAY. THIS MAY REQUIRE THE CONTRACTOR TO REPLACE OR PLACE SUFFICIENT MATERIAL IN THE EXCAVATION TO REDUCE THE DROP-OFF TO BE COMPLIANT WITH THE REQUIREMENTS FOR USE OF BARRICADES. NO ADDITIONAL COMPENSATION SHALL BE ALLOWED TO COMPLY WITH THIS REQUIREMENT.

18. GEOTECHNICAL FABRIC FOR GROUND STABILIZATION AND/OR AGGREGATE SUBGRADE IMPROVEMENT (CU YD) HAVE BEEN PROVIDED FOR USE AT THE LOCATIONS INDICATED FOR SOILS THAT TEND TO BE UNSTABLE AND/OR UNSUITABLE. THE ACTUAL NEED FOR REMOVAL AND REPLACEMENT WITH ABOVE ITEM WILL BE DETERMINED IN THE FIELD AT THE TIME OF CONSTRUCTION BY THE GEOTECHNICAL ENGINEER. ALL POTENTIALLY UNSTABLE SOILS SHOULD BE TESTED WITH A STATIC OR DYNAMIC CONE PENETROMETER AND TREATED IN ACCORDANCE WITH ARTICLE 301.04 OF THE SSRBC AND IDOT SUBGRADE STABILITY MANUAL. IF UNSTABLE AND/OR UNSUITABLE SOILS ARE NOT ENCOUNTERED, THEN THE QUANTITY SHALL BE DEDUCTED AND NO ADDITIONAL COST COMPENSATION WILL BE DUE TO THE CONTRACTOR.

19. ANY AGGREGATE SUBGRADE IMPROVEMENT CONTAMINATED AND/OR DAMAGED BY THE CONTRACTOR'S VEHICLES AND/OR EQUIPMENTS IS TO BE REMOVED AND REPLACED AS DIRECTED BY THE ENGINEER AT THE CONTRACTOR EXPENSE.

20. THE CONTRACTOR SHALL ESTABLISH AN OVERNIGHT TEMPORARY WORK ZONE SPEED LIMIT REDUCTION FROM 55 MPH TO 45 MPH USING ADVANCE "SPEED LIMIT 45" REDUCTION WARNING (W3-5(0)-48) SIGNS, WORK ZONE SPEED LIMIT 45 SIGN ASSEMBLIES AND "END WORK ZONE SPEED LIMIT" SIGNS PER HIGHWAY STANDARD 701421 AND ARTICLE 701.14 (B) FOR PROJECT LOCATIONS WHERE SHOULDER EXCAVATION WITH BARRICADES WILL REMAIN OVERNIGHT. THE ADVANCE "SPEED LIMIT 45" REDUCTION WARNING (W3-5(0)-48) SIGNS SHALL BE INSTALLED 500' PRIOR TO THE INITAL WORK ZONE SPEED LIMIT 45 SIGNS. THIS WORK SHALL BE PAID FOR AS TEMPORARY INFORMATION SIGNING

21. SPEED DISPLAY TRAILERS SHALL BE INSTALLED A MAXIMUM OF 100' DOWNSTREAM FROM THE INITIAL WORK ZONE SPEED LIMIT SIGN ASSEMBLY AND DELINEATED WITH THREE (3) TYPE II BARRICADES, DRUMS, OR VERTICAL BARRICADES AT 25' CENTERS.

1 REVISED ENTIRE SHEET 8/20/2025

MODEL: GenNotesSht01 [Sheet]
FILE NAME: c:\pw_work\pwidot\jammal.alramahi@illinois.gov\d1011849\D121724-sht-gennote.dgn

USER NAME = jammal.alramahi	DESIGNED -	REVISED -	STATE OF ILLINOIS DEPARTMENT OF TRANSPORTATION
	DRAWN -	REVISED -	
	CHECKED -	REVISED -	
PLOT DATE = 6/26/2025	DATE -	REVISED -	

US 45/52 - N OF MONEE MANHATTAN RD TO WILMINGTON PEOTONE RD
INDEX, HIGHWAY STANDARDS AND GENERAL NOTES

SCALE: | SHEET 1 OF 1 SHEETS | STA. TO STA.

F.A.P. RTE.	SECTION	COUNTY	TOTAL SHEETS	SHEET NO.
330	2024-981-RS	WILL	166	2

CONTRACT NO. 62X01

ILLINOIS | FED. AID PROJECT

CODE NO.	ITEM	UNIT	TOTAL QUANTITY	CONSTRUCTION CODE	
				80% FEDERAL 20% STATE	100% STATE
				ROADWAY	ROADWAY
				0005	0005
				URBAN	URBAN
20100110	TREE REMOVAL (6 TO 15 UNITS DIAMETER)	UNIT	354	354	
20100210	TREE REMOVAL (OVER 15 UNITS DIAMETER)	UNIT	710	710	
20101350	TREE PRUNNING (OVER 10 INCH DIAMETER)	EACH	1	1	
20200100	EARTH EXCAVATION	CU YD	16,450	16,450	
20201200	REMOVAL AND DISPOSAL OF UNSUITABLE MATERIAL	CU YD	8,972	8,972	1
21001000	GEOTECHNICAL FABRIC FOR GROUND STABILIZATION	SQ YD	6,729	6,729	
21101615	TOPSOIL FURNISH AND PLACE, 4"	SQ YD	250	250	
21400100	GRADING AND SHAPING DITCHES	FOOT	8,138	8,138	
25000210	SEEDING, CLASS 2A	ACRE	1	1	
25003210	INTERSEEDING, CLASS 2A	ACRE	1.37	1.37	
25100630	EROSION CONTROL BLANKET	SQ YD	5,426	5,426	
25200110	SODDING, SALT TOLERANT	SQ YD	250	250	
30300001	AGGREGATE SUBGRADE IMPROVEMENT	CU YD	8,972	8,972	
30300112	AGGREGATE SUBGRADE IMPROVEMENT, 12"	SQ YD	26,915	26,915	
40600275	BITUMINOUS MATERIALS (PRIME COAT)	POUND	60,559	60,559	

* SPECIALTY ITEM

1 REVISED SHEET 9/9/2025

MODEL: SOQ [1] [Sheet]
FILE NAME: c:\pw_work\pwidot\jammal.alramahi@illinois.gov\d1011849\D121724-sht-SOQ.dgn

USER NAME = jammal.alramahi	DESIGNED -	REVISED -	STATE OF ILLINOIS DEPARTMENT OF TRANSPORTATION
	DRAWN -	REVISED -	
	CHECKED -	REVISED -	
PLOT DATE = 6/26/2025	DATE -	REVISED -	

US 45/52 - N OF MONEE MANHATTAN RD TO WILMINGTON PEOTONE RD
SUMMARY OF QUANTITIES

SCALE: | SHEET 1 OF 7 SHEETS | STA. | TO STA.

F.A.P. RTE.	SECTION	COUNTY	TOTAL SHEETS	SHEET NO.
330	2024-981-RS	WILL	166	3

CONTRACT NO. 62X01

ILLINOIS | FED. AID PROJECT

	CODE NO.	ITEM	UNIT	TOTAL QUANTITY	CONSTRUCTION CODE	
					80% FEDERAL 20% STATE	100% STATE
					ROADWAY	ROADWAY
					0005	0005
					URBAN	URBAN
	60920018	PIPE CULVERTS TO BE CLEANED 18"	FOOT	590		590
*	63000001	STEEL PLATE BEAM GUARDRAIL, TYPE A, 6 FOOT POSTS	FOOT	313	313	
*	63100167	TRAFFIC BARRIER TERMINAL, TYPE 1 (SPECIAL) TANGENT	EACH	8	8	
	63200310	GUARDRAIL REMOVAL	FOOT	600	600	
	64200108	SHOULDER RUMBLE STRIPS, 8 INCH	FOOT	34,477	34,477	
*	66900200	NON-SPECIAL WASTE DISPOSAL	CU YD	4,315	4,315	
						1
*	66900530	SOIL DISPOSAL ANALYSIS	EACH	5	5	
*	66901001	REGULATED SUBSTANCES PRE-CONSTRUCTION PLAN	L SUM	1	1	
*	66901003	REGULATED SUBSTANCES FINAL CONSTRUCTION REPORT	L SUM	1	1	
	66901006	REGULATED SUBSTANCES MONITORING	CAL DA	35	35	1
	67100100	MOBILIZATION	L SUM	1	1	
	70100450	TRAFFIC CONTROL AND PROTECTION, STANDARD 701201	L SUM	1	1	
	70100460	TRAFFIC CONTROL AND PROTECTION, STANDARD 701306	L SUM	1	1	
	70100500	TRAFFIC CONTROL AND PROTECTION, STANDARD 701326	L SUM	1	1	
	70100600	TRAFFIC CONTROL AND PROTECTION, STANDARD 701336	L SUM	1	1	

* SPECIALTY ITEM

1 REVISED SHEET 9/9/2025

MODEL: SOQ [4] [Sheet]
FILE NAME: c:\pw_work\pwidot\jammal.alramahi@illinois.gov\d1011849\D121724-sht-SOQ.dgn

USER NAME = jammal.alramahi	DESIGNED -	REVISED -	
	DRAWN -	REVISED -	
	CHECKED -	REVISED -	
PLOT DATE = 6/26/2025	DATE -	REVISED -	

STATE OF ILLINOIS
DEPARTMENT OF TRANSPORTATION

US 45/52 - N OF MONEE MANHATTAN RD TO WILMINGTON PEOTONE RD
SUMMARY OF QUANTITIES

SCALE: SHEET 4 OF 7 SHEETS STA. TO STA.

F.A.P. RTE.	SECTION	COUNTY	TOTAL SHEETS	SHEET NO.
330	2024-981-RS	WILL	166	6

CONTRACT NO. 62X01

ILLINOIS | FED. AID PROJECT

CODE NO.	ITEM	UNIT	TOTAL QUANTITY	CONSTRUCTION CODE	
				80% FEDERAL 20% STATE	100% STATE
				ROADWAY	ROADWAY
				0005	0005
				URBAN	URBAN
70102637	TRAFFIC CONTROL AND PROTECTION, STANDARD 701701	EACH	1	1	
70103815	TRAFFIC CONTROL SURVEILLANCE	CAL DA	35	35	
70300100	SHORT TERM PAVEMENT MARKING	FOOT	71,265	71,265	
70300150	SHORT TERM PAVEMENT MARKING REMOVAL	SQ FT	49,659	49,659	
70300211	TEMPORARY PAVEMENT MARKING LETTERS AND SYMBOLS - PAINT	SQ FT	292	292	
70300221	TEMPORARY PAVEMENT MARKING - LINE 4" - PAINT	FOOT	203,992	203,992	
70300241	TEMPORARY PAVEMENT MARKING - LINE 6" - PAINT	FOOT	1,132	1,132	
70300261	TEMPORARY PAVEMENT MARKING - LINE 12" - PAINT	FOOT	14,940	14,940	
70300281	TEMPORARY PAVEMENT MARKING - LINE 24" - PAINT	FOOT	534	534	
70307120	TEMPORARY PAVEMENT MARKING - LINE 4" - TYPE IV TAPE	FOOT	148,976	148,976	
72000200	SIGN PANEL - TYPE 2	SQ FT	144	144	1
* 72501000	TERMINAL MARKER - DIRECT APPLIED	EACH	12	12	
* 78000100	THERMOPLASTIC PAVEMENT MARKING - LETTERS AND SYMBOLS	SQ FT	146	146	
* 78000200	THERMOPLASTIC PAVEMENT MARKING - LINE 4"	FOOT	5,892	5,892	1
* 78000400	THERMOPLASTIC PAVEMENT MARKING - LINE 6"	FOOT	566	566	

* SPECIALTY ITEM

1 REVISED SHEET 8/20/2025

MODEL: SOQ [5] [Sheet]
FILE NAME: c:\pw_work\pwidot\jammal.alramahi@illinois.gov\d1011849\D121724-sht-SOQ.dgn

USER NAME = jammal.alramahi	DESIGNED -	REVISED -
	DRAWN -	REVISED -
	CHECKED -	REVISED -
PLOT DATE = 6/26/2025	DATE -	REVISED -

STATE OF ILLINOIS
DEPARTMENT OF TRANSPORTATION

US 45/52 - N OF MONEE MANHATTAN RD TO WILMINGTON PEOTONE RD
SUMMARY OF QUANTITIES

SCALE: SHEET 5 OF 7 SHEETS STA. TO STA.

F.A.P. RTE.	SECTION	COUNTY	TOTAL SHEETS	SHEET NO.
330	2024-981-RS	WILL	166	7

CONTRACT NO. 62X01

ILLINOIS FED. AID PROJECT

	CODE NO.	ITEM	UNIT	TOTAL QUANTITY	CONSTRUCTION CODE	
					80% FEDERAL 20% STATE	100% STATE
					ROADWAY	ROADWAY
					0005	0005
					URBAN	URBAN
	X7010410	SPEED DISPLAY TRAILER	CAL MO	12	12	
	X7200061	TEMPORARY INFORMATION SIGNING	SQ FT	1,475	1,475	
*	X7800815	HOT-SPRAY THERMOPLASTIC PAVEMENT MARKING LINE - 4 INCH	FOOT	101,996	101,996	1
	Z0013798	CONSTRUCTION LAYOUT	L SUM	1	1	
	Z0018500	DRAINAGE STRUCTURES TO BE CLEANED	EACH	5		5
Ø	Z0076600	TRAINEES	HOUR	500	500	
Ø	Z0018500	TRAINEES - TRAINING PROGRAM GRADUATE	HOUR	500	500	

* SPECIALTY ITEM

1 REVISED SHEET 8/20/2025

Ø 0042

MODEL: SOQ [7] [Sheet]
FILE NAME: c:\pw_work\pwidot\jammal.alramahi@illinois.gov\d1011849\D1217224-sht-SOQ.dgn

USER NAME = jammal.alramahi	DESIGNED -	REVISED -	STATE OF ILLINOIS DEPARTMENT OF TRANSPORTATION
	DRAWN -	REVISED -	
	CHECKED -	REVISED -	
PLOT DATE = 6/26/2025	DATE -	REVISED -	

US 45/52 - N OF MONEE MANHATTAN RD TO WILMINGTON PEOTONE RD
SUMMARY OF QUANTITIES

SCALE: | SHEET 7 OF 7 SHEETS | STA. | TO STA.

F.A.P. RTE.	SECTION	COUNTY	TOTAL SHEETS	SHEET NO.
330	2024-981-RS	WILL	166	9

CONTRACT NO. 62X01

ILLINOIS | FED. AID PROJECT

REV-SEP

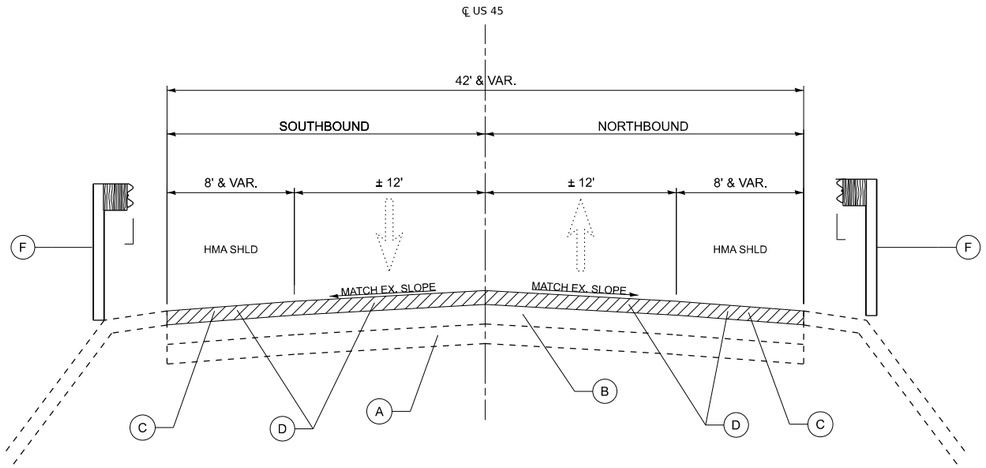

EXISTING TYPICAL CROSS SECTION

STA. 72+90 TO STA. 167+69
STA. 191+52 TO STA. 200+19
EX STRUCTURE AND BRIDGE OMISSION
STA. 120+76 TO STA. 120+14

LEGEND

- (A) — EXISTING PCC PAVEMENT, ±10"
- (B) — EXISTING HMA 7 3/4" TO 20", ± 5 1/4"
- (C) — EXISTING HMA SHOULDER
- (D) — HMA SURFACE REMOVAL, 3 3/4"
- (E) — EARTH EXCAVATION, 22" (AS SHOWN ON THE PLANS OR AS DIRECTED BY THE ENGINEER)
- (F) — EXISTING GUARDRAIL / GUARDRAIL REMOVAL
- (1) — HOT-MIX ASPHALT SURFACE COURSE, IL-9.5, MIX "D", N70, 1 3/4"
- (2) — HOT-MIX ASPHALT BINDER COURSE, IL-9.5, N70, 2"
- (3) — AGGREGATE SUBGRADE IMPROVEMENT, 12"
- (4) — HOT-MIX ASPHALT SHOULDERS, 10"
- (5) — SHOULDER RUMBLE STRIPS, 8 INCH
- (6) — CENTER LINE - RUMBLE STRIPS - 16"
- (7) — STEEL PLATE BEAM GUARDRAIL, TYPE A, 6 FT POSTS
- (8) — AGGREGATE WEDGE SHOULDER, TYPE B

HOT-MIX ASPHALT MIXTURE REQUIREMENTS			
	MIX DESIGN	AIR VOIDS @ NDES	QUALITY MANAGEMENT PROGRAM (QMP)
HOT-MIX ASPHALT SHOULDERS, 10"			
	HOT-MIX ASPHALT SURFACE COURSE, IL-9.5, MIX "D", N70, 1 3/4"	4% @ 70 GYR.	QC/QA
	HOT-MIX ASPHALT BINDER COURSE, IL-19.0, N70, 8 1/4"	4% @ 70 GYR.	QC/QA
DESIGNED OVERLAY & SHOULDER RESURFACING			
	HOT-MIX ASPHALT SURFACE COURSE, IL-9.5, MIX "D", N70, 1 3/4"	4% @ 70 GYR.	QCP
	HOT-MIX ASPHALT BINDER COURSE, IL-9.5, N70, 2"	4% @ 70 GYR.	QCP
TEMPORARY RAMP (SPECIAL)			
	HOT-MIX ASPHALT BINDER COURSE, IL-9.5, N70	4% @ 70 GYR.	QC/QA
PATCHING			
	CLASS D PATCH (HMA BINDER IL-19.0)	4% @ 70 GYR.	QC/QA
QMP DESIGNATION: QUALITY CONTROL / QUALITY ASSURANCE (QC/QA), QUALITY CONTROL FOR PERFORMANCE (QCP), PAY FOR PERFORMANCE (PFP)			

MIXTURE REQUIREMENTS NOTES:

NOTE 1. THE UNIT WEIGHT USED TO CALCULATE ALL HOT-MIX ASPHALT SURFACE MIXTURE QUANTITIES IS 112 LBS/SQ YD/IN.
NOTE 2. THE CONTRACTOR SHALL MILL FIRST THEN PATCH.
NOTE 3. THE "AC TYPE" FOR POLYMERIZED HMA MIXES SHALL BE "SBS/SBR PG 76-22" AND FOR NON POLYMERIZED HMA THE THE "AC TYPE" SHALL BE "PG 64-22" UNLESS MODIFIED BY RECLAIMED MATERIALS SPECIFICATIONS.
NOTE 4. THE LONGITUDINAL JOINT SEALANT SHALL BE PLACED OVER THE HMA BINDER COURSE, IL-9.5 N70.

LOCATIONS OF GUARDRAIL REMOVAL & REPLACEMENT SHALL BE DETERMINED BY THE ENGINEER

EXISTING GUARDRAIL (LT)
STA. 121+26.8 TO STA. 120+75.5
STA. 120+14 TO STA. 119+36.8

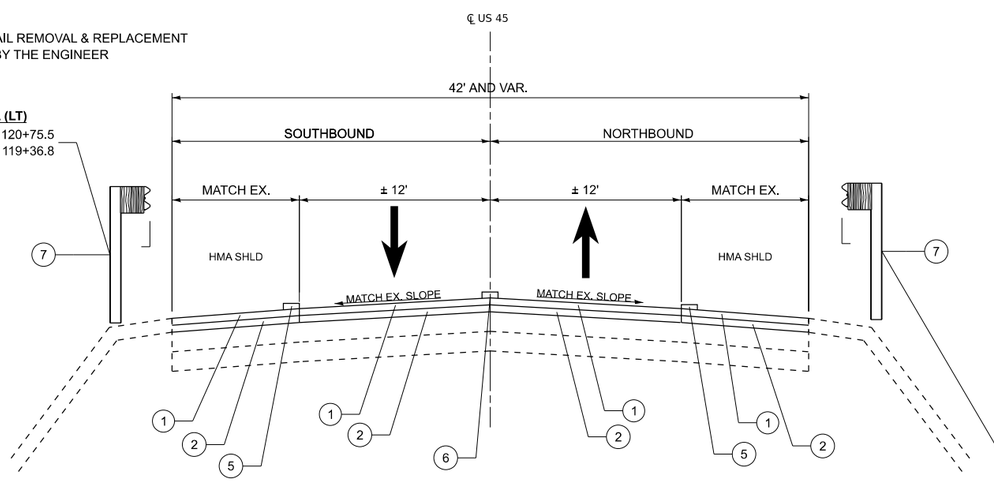

EXISTING GUARDRAIL (RT)
STA. 119+33.6 TO STA. 120+14.3
STA. 120+75.9 TO STA. 121+26.3

LOCATIONS OF GUARDRAIL REMOVAL & REPLACEMENT SHALL BE DETERMINED BY THE ENGINEER

PROPOSED TYPICAL CROSS SECTION

STA. 72+90 TO STA. 167+69
STA. 191+52 TO STA. 200+19
EX STRUCTURE AND BRIDGE OMISSION
STA. 120+76 TO STA. 120+14

NOTES:

A. SAWCUT THE EXISTING HMA SHOULDER 1 FT FROM THE OUTSIDE EDGE FOR A CLEAN LINE FOR THE HMA SHOULDER WIDENING, WHERE THE EXISTING HMA SHOULDER IS 1 FT OR LESS, SAWCUT ON THE 12 FT LANE.

B. SAWCUTTING THE EXISTING HMA PAVEMENT SHALL BE INCLUDED IN THE COST OF THE PAVEMENT REMOVAL PAY ITEM.

1 REVISED ENTIRE SHEET 8/20/2025

MODEL: TYP. 1 [Sheet]
FILE NAME: c:\pw_work\pwidot\jammal.alramahi@illinois.gov\d1011849\D121724-sht-typical.dgn

USER NAME = jammal.alramahi	DESIGNED -	REVISED -	
	DRAWN -	REVISED -	
	CHECKED -	REVISED -	
PLOT DATE = 6/26/2025	DATE -	REVISED -	

STATE OF ILLINOIS
DEPARTMENT OF TRANSPORTATION

US 45/52 - N OF MONEE MANHATTAN RD TO WILMINGTON PEOTONE RD
EXISTING AND PROPOSED TYPICAL SECTIONS

SCALE: SHEET 1 OF 3 SHEETS STA. TO STA.

F.A.P. RTE.	SECTION	COUNTY	TOTAL SHEETS	SHEET NO.
330	2024-981-RS	WILL	166	11

CONTRACT NO. 62X01

ILLINOIS FED. AID PROJECT

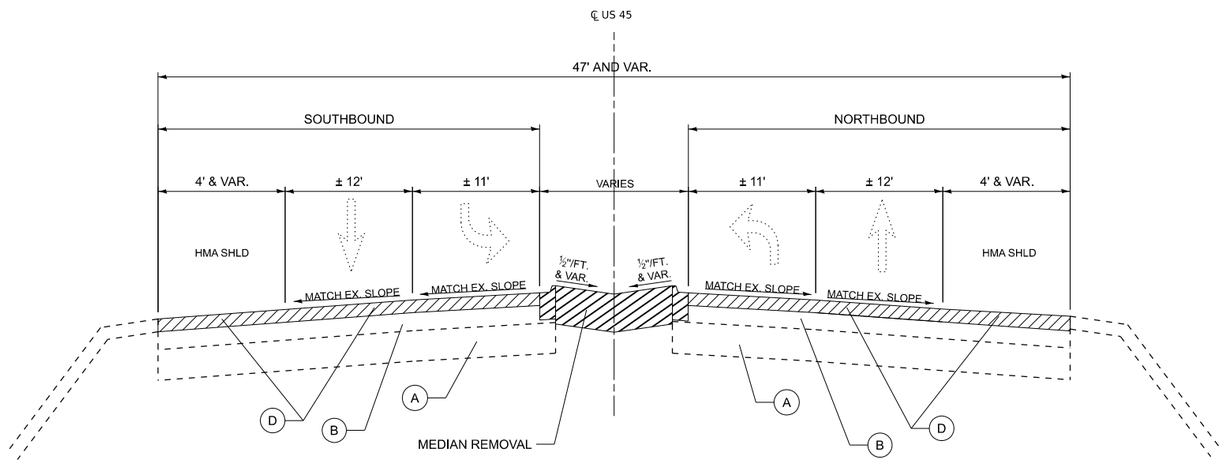

EXISTING TYPICAL CROSS SECTION

STA. 167+69 TO STA. 191+52

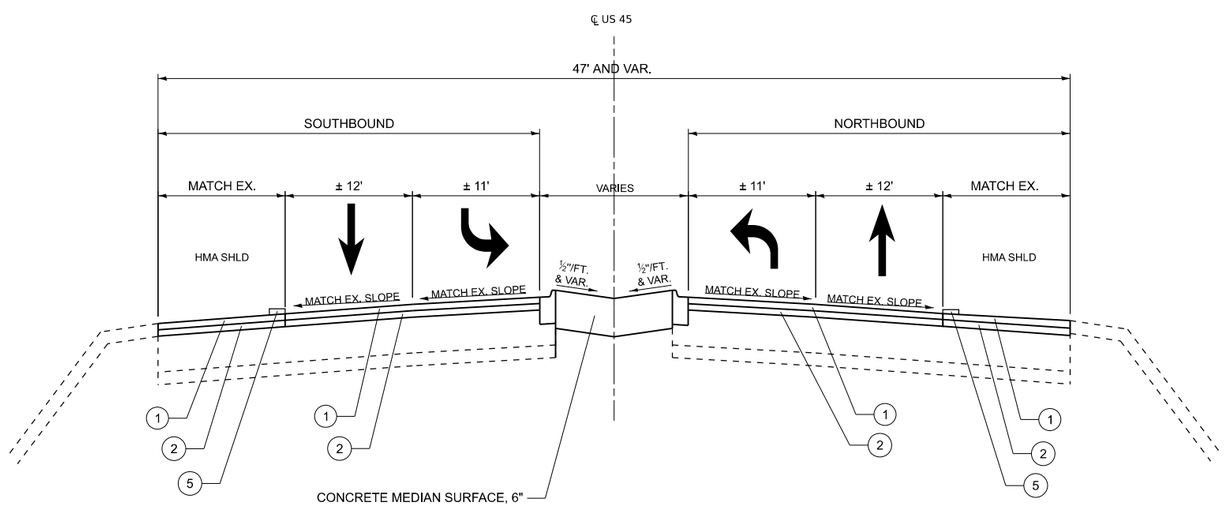

PROPOSED TYPICAL CROSS SECTION

STA. 167+69 TO STA. 191+52

LEGEND

- (A) — EXISTING PCC PAVEMENT, ±10"
- (B) — EXISTING HMA 7 3/4" TO 20", ± 5 1/4"
- (C) — EXISTING HMA SHOULDER
- (D) — HMA SURFACE REMOVAL, 3 3/4"
- (E) — EARTH EXCAVATION, 22" (AS SHOWN ON THE PLANS OR AS DIRECTED BY THE ENGINEER)
- (F) — EXISTING GUARDRAIL / GUARDRAIL REMOVAL
- (1) — HOT-MIX ASPHALT SURFACE COURSE, IL-9.5, MIX "D", N70, 1 3/4"
- (2) — HOT-MIX ASPHALT BINDER COURSE, IL-9.5, N70, 2"
- (3) — AGGREGATE SUBGRADE IMPROVEMENT, 12"
- (4) — HOT-MIX ASPHALT SHOULDERS, 10"
- (5) — SHOULDER RUMBLE STRIPS, 8 INCH
- (6) — CENTER LINE - RUMBLE STRIPS - 16"
- (7) — STEEL PLATE BEAM GUARDRAIL, TYPE A, 6 FT POSTS
- (8) — AGGREGATE WEDGE SHOULDER, TYPE B

1 REVISED ENTIRE SHEET 8/20/2025

MODEL: TYP. 2 [Sheet]
FILE NAME: c:\pw_work\pwidot\jammal.alramahi@illinois.gov\d1011849\D121724-sht-typical.dgn

USER NAME = jammal.alramahi	DESIGNED -	REVISED -	STATE OF ILLINOIS DEPARTMENT OF TRANSPORTATION
	DRAWN -	REVISED -	
	CHECKED -	REVISED -	
PLOT DATE = 6/26/2025	DATE -	REVISED -	

US 45/52 - N OF MONEE MANHATTAN RD TO WILMINGTON PEOTONE RD
EXISTING AND PROPOSED TYPICAL SECTIONS

SCALE: SHEET 2 OF 3 SHEETS STA. TO STA.

F.A.P. RTE.	SECTION	COUNTY	TOTAL SHEETS	SHEET NO.
330	2024-981-RS	WILL	166	12
		CONTRACT NO. 62X01		
		ILLINOIS FED. AID PROJECT		

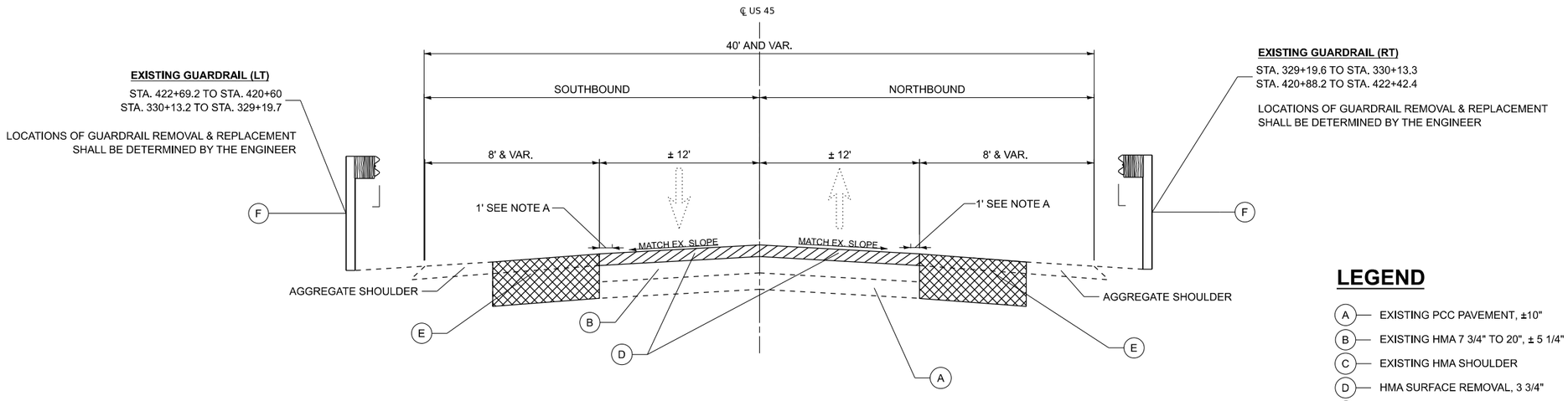

EXISTING TYPICAL CROSS SECTION

STA. 200+19 TO STA. 446+12
EX STRUCTURE OMISSION
STA. 330+13.2 TO STA. 329+19.7

LEGEND

- (A) — EXISTING PCC PAVEMENT, ±10"
- (B) — EXISTING HMA 7 3/4" TO 20", ± 5 1/4"
- (C) — EXISTING HMA SHOULDER
- (D) — HMA SURFACE REMOVAL, 3 3/4"
- (E) — EARTH EXCAVATION, 22" (AS SHOWN ON THE PLANS OR AS DIRECTED BY THE ENGINEER)
- (F) — EXISTING GUARDRAIL / GUARDRAIL REMOVAL
- (1) — HOT-MIX ASPHALT SURFACE COURSE, IL-9.5, MIX "D", N70, 1 3/4"
- (2) — HOT-MIX ASPHALT BINDER COURSE, IL-9.5, N70, 2"
- (3) — AGGREGATE SUBGRADE IMPROVEMENT, 12"
- (4) — HOT-MIX ASPHALT SHOULDERS, 10"
- (5) — SHOULDER RUMBLE STRIPS, 8 INCH
- (6) — CENTER LINE - RUMBLE STRIPS - 16"
- (7) — STEEL PLATE BEAM GUARDRAIL, TYPE A, 6 FT POSTS
- (8) — AGGERGATE WEDGE SHOULDER, TYPE B

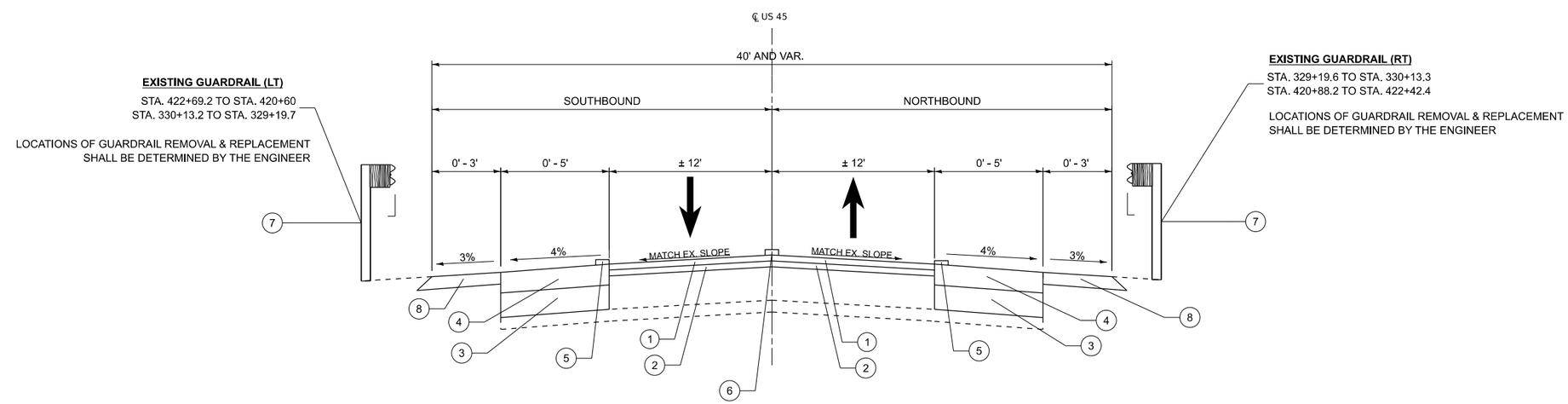

PROPOSED TYPICAL CROSS SECTION

STA. 200+19 TO STA. 446+12
EX STRUCTURE OMISSION
STA. 330+13.2 TO STA. 329+19.7

1 REVISED ENTIRE SHEET 8/20/2025

MODEL: TYP. 3 [Sheet]
FILE NAME: c:\pw_work\pwidot\jammal.alramahi@illinois.gov\d1011849\D121724-sht-typical.dgn

USER NAME = jammal.alramahi	DESIGNED -	REVISED -	
	DRAWN -	REVISED -	
	CHECKED -	REVISED -	
PLOT DATE = 6/26/2025	DATE -	REVISED -	

STATE OF ILLINOIS
DEPARTMENT OF TRANSPORTATION

US 45/52 - N OF MONEE MANHATTAN RD TO WILMINGTON PEOTONE RD
EXISTING AND PROPOSED TYPICAL SECTIONS

SCALE: | SHEET 3 OF 3 SHEETS | STA. TO STA.

F.A.P. RTE.	SECTION	COUNTY	TOTAL SHEETS	SHEET NO.
330	2024-981-RS	WILL	166	13

CONTRACT NO. 62X01

ILLINOIS | FED. AID PROJECT

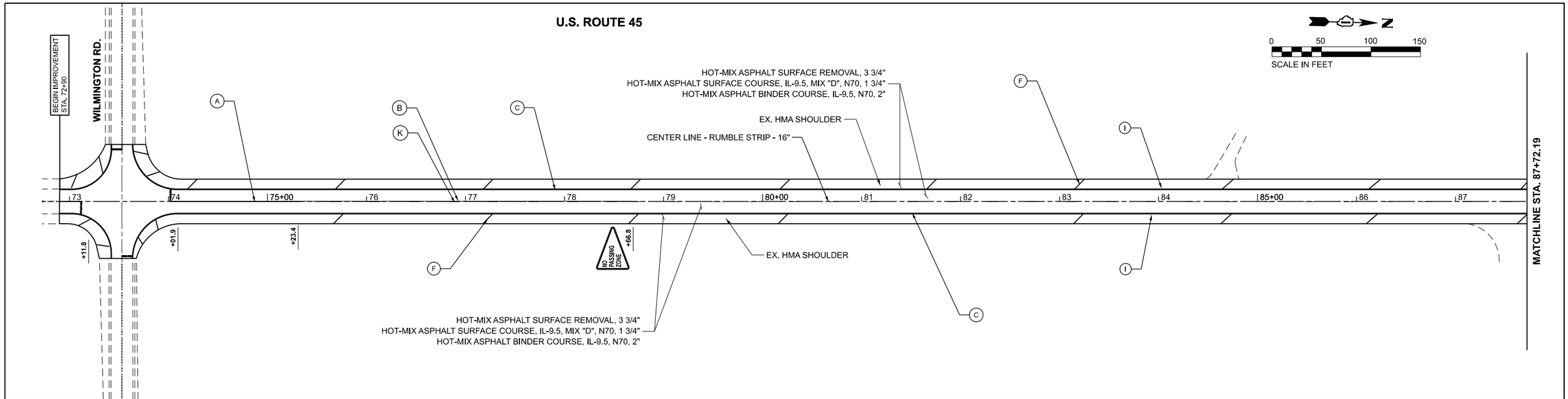

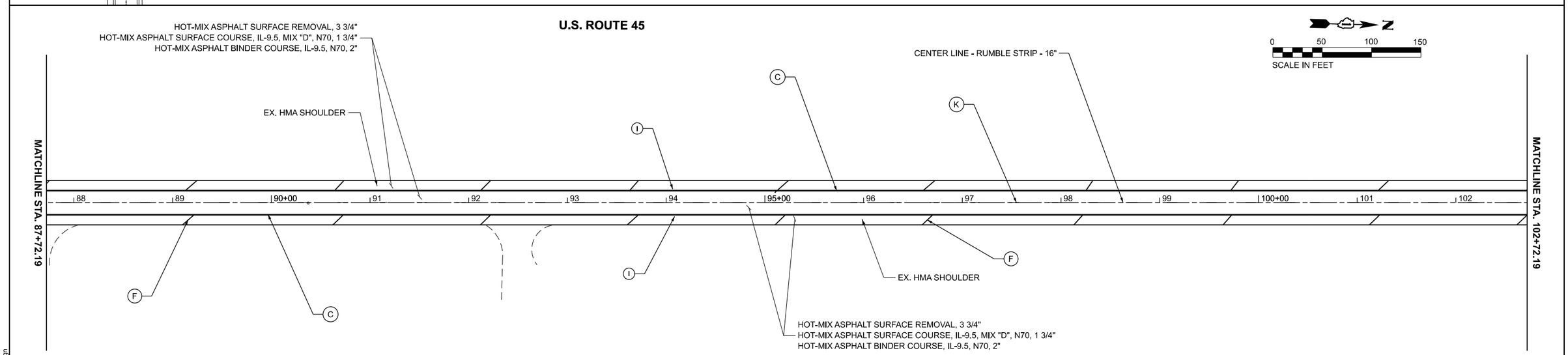

PAVEMENT STRIPING LEGEND

- (A) THERMOPLASTIC PAVEMENT MARKING - LINE 4" (SOLID YELLOW DOUBLE CENTERLINE)
- (B) HOT-SPRAY THERMOPLASTIC PAVEMENT MARKING - LINE 4" (SOLID YELLOW)
- (C) THERMOPLASTIC PAVEMENT MARKING - LINE 4" (SOLID WHITE)
- (D) THERMOPLASTIC PAVEMENT MARKING - LINE 6" (SOLID WHITE)
- (E) THERMOPLASTIC PAVEMENT MARKING - LINE 6" (WHITE SKIP DASH 2' DASH @ 6' SKIP)
- (F) THERMOPLASITC PAVEMENT MARKING - LINE 12" (SOLID WHITE)
- (G) THERMOPLASTIC PAVEMENT MARKING - LINE 24" (SOLID WHITE STOP BAR)
- (H) THERMOPLASTIC PAVEMENT MARKING - LETTERS AND SYMBOLS
- (I) SHOULDER RUMBLE STRIPS, 8"
- (K) THERMOPLASTIC PAVEMENT MARKING - LINE 4" (YELLOW SKIP DASH, 10' LINE @ 30' SPACING)
- (L) THERMOPLASTIC PAVEMENT MARKINGS - LINE 4" (SOLID YELLOW)

NOTES:

1. LIMITS OF RESURFACING ON SIDE STREETS THROUGHOUT THE PROJECT SHALL BE TO THE RADIUS OF RETURN, UNLESS OTHERWISE SHOWN ON THE PLANS, OR AS DIRECTED BY THE ENGINEER.
2. ALL FINAL PAVEMENT MARKINGS SHALL BE THERMOPLASTIC PAVEMENT MARKINGS (OF THE EXTRUDED TYPE) ON HMA PAVEMENTS.
3. ALL FINAL PAVEMENT MARKINGS SHALL BE PLACED IN ACCORDANCE WITH TC-13 "DISTRICT ONE TYPICAL PAVEMENT MARKIGNS" STANDARD DETAIL.
4. ALL RAISED REFLECTIVE PAVEMENT MARKIGNS SHALL BE PLACED IN ACCORDANCE WITH TC-11 "TYPICAL APPLICATIONS RAISED REFLECTIVE PAVEMENT MARKERS (SNOW-PLOW RESISTANT)" STANDARD DETAIL.
5. CULVERT LOCATIONS TO BE CLEANED SHALL BE DETERMINED BY THE ENGINEER AT THE TIME OF CONSTRUCTION.

1 REVISED ENTIRE SHEET 8/20/2025

MODEL: ExCL21 - Plan 1 [Sheet]
FILE NAME: c:\cpw_work\pwidot\jammal.alramahi@illinois.gov\d1011849\D121724-sht-plan.dgn

USER NAME = jammal.alramahi	DESIGNED -	REVISED -	
	DRAWN -	REVISED -	
	CHECKED -	REVISED -	
PLOT DATE = 8/13/2025	DATE -	REVISED -	

STATE OF ILLINOIS
DEPARTMENT OF TRANSPORTATION

US 45/52 - N OF MONEE MANHATTAN RD TO WILMINGTON PEOTONE RD
ROADWAY & PAVEMENT STRIPING PLANS

SCALE: | SHEET 1 OF 13 SHEETS | STA. 72+72.19 TO STA. 102+72.19

F.A.P. RTE.	SECTION	COUNTY	TOTAL SHEETS	SHEET NO.
330	2024-981-RS	WILL	166	18
		CONTRACT NO. 62X01		
		ILLINOIS	FED. AID PROJECT	

U.S. ROUTE 45

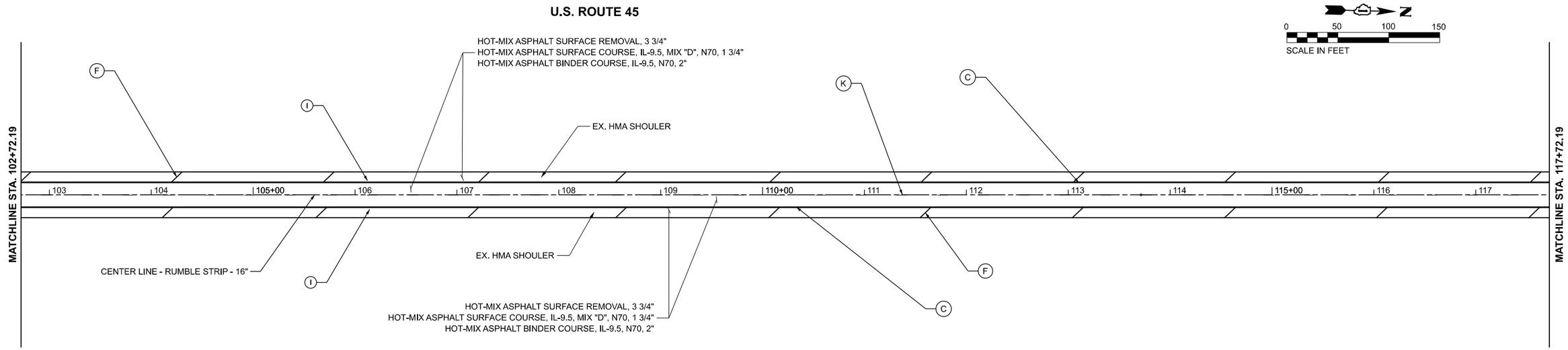

U.S. ROUTE 45

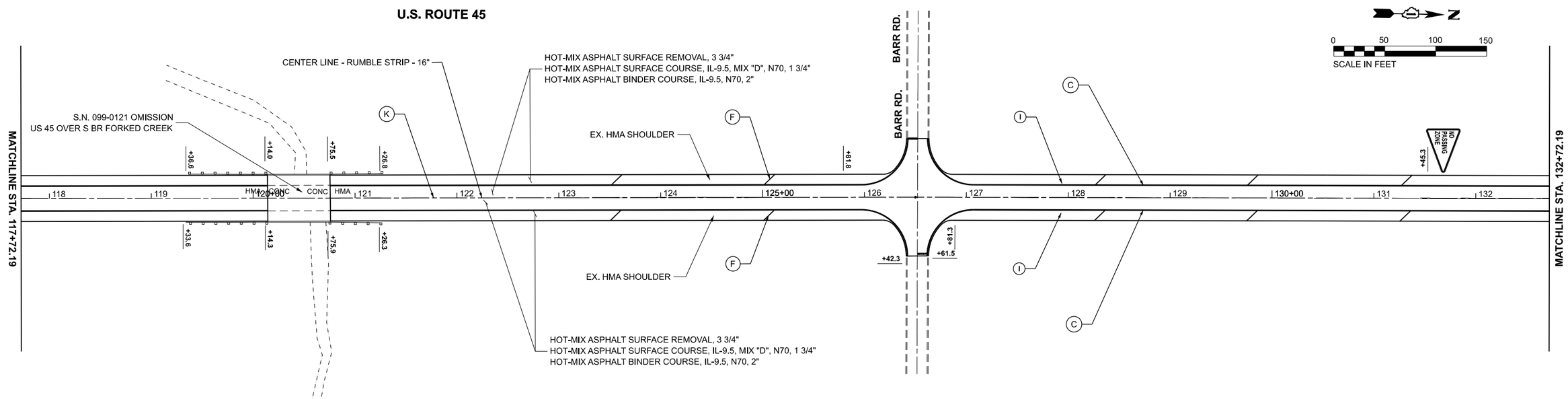

PAVEMENT STRIPING LEGEND

- (A) THERMOPLASTIC PAVEMENT MARKING - LINE 4" (SOLID YELLOW DOUBLE CENTERLINE)
- (B) HOT-SPRAY THERMOPLASTIC PAVEMENT MARKING - LINE 4" (SOLID YELLOW)
- (C) THERMOPLASTIC PAVEMENT MARKING - LINE 4" (SOLID WHITE)
- (D) THERMOPLASTIC PAVEMENT MARKING - LINE 6" (SOLID WHITE)
- (E) THERMOPLASTIC PAVEMENT MARKING - LINE 6" (WHITE SKIP DASH 2' DASH @ 6' SKIP)
- (F) THERMOPLASITC PAVEMENT MARKING - LINE 12" (SOLID WHITE)
- (G) THERMOPLASTIC PAVEMENT MARKING - LINE 24" (SOLID WHITE STOP BAR)
- (H) THERMOPLASTIC PAVEMENT MARKING - LETTERS AND SYMBOLS
- (I) SHOULDER RUMBLE STRIPS, 8"
- (J) CENTERLINE RUMBLE STRIPS, 16" AND HOT-SPRAY THERMOPLASTIC PAVEMENT MARKING LINE - 4"
- (K) THERMOPLASTIC PAVEMENT MARKING - LINE 4" (YELLOW SKIP DASH, 10' LINE @ 30' SPACING)

NOTES:

1. LIMITS OF RESURFACING ON SIDE STREETS THROUGHOUT THE PROJECT SHALL BE TO THE RADIUS OF RETURN, UNLESS OTHERWISE SHOWN ON THE PLANS, OR AS DIRECTED BY THE ENGINEER.
2. ALL FINAL PAVEMENT MARKINGS SHALL BE THERMOPLASTIC PAVEMENT MARKINGS (OF THE EXTRUDED TYPE) ON HMA PAVEMENTS.
3. ALL FINAL PAVEMENT MARKINGS SHALL BE PLACED IN ACCORDANCE WITH TC-13 "DISTRICT ONE TYPICAL PAVEMENT MARKIGNS" STANDARD DETAIL.
4. ALL RAISED REFLECTIVE PAVEMENT MARKIGNS SHALL BE PLACED IN ACCORDANCE WITH TC-11 "TYPICAL APPLICATIONS RAISED REFLECTIVE PAVEMENT MARKERS (SNOW-PLOW RESISTANT)" STANDARD DETAIL.

(1) REVISED ENTIRE SHEET 8/20/2025

MODEL: ExCL21 - Plan 3 [Sheet]
FILE NAME: c:\pw_work\pwidot\jammal.alramahi@illinois.gov\d1011849\D721724-sht-plan.dgn

USER NAME = jammal.alramahi	DESIGNED -	REVISED -	
	DRAWN -	REVISED -	
	CHECKED -	REVISED -	
PLOT DATE = 8/13/2025	DATE -	REVISED -	

STATE OF ILLINOIS
DEPARTMENT OF TRANSPORTATION

US 45/52 - N OF MONEE MANHATTAN RD TO WILMINGTON PEOTONE RD
ROADWAY & PAVEMENT STRIPING PLANS

SCALE: | SHEET 2 OF 13 SHEETS | STA. 102+72.19 TO STA. 132+72.19

F.A.P. RTE.	SECTION	COUNTY	TOTAL SHEETS	SHEET NO.
330	2024-981-RS	WILL	166	19

CONTRACT NO. 62X01

ILLINOIS | FED. AID PROJECT

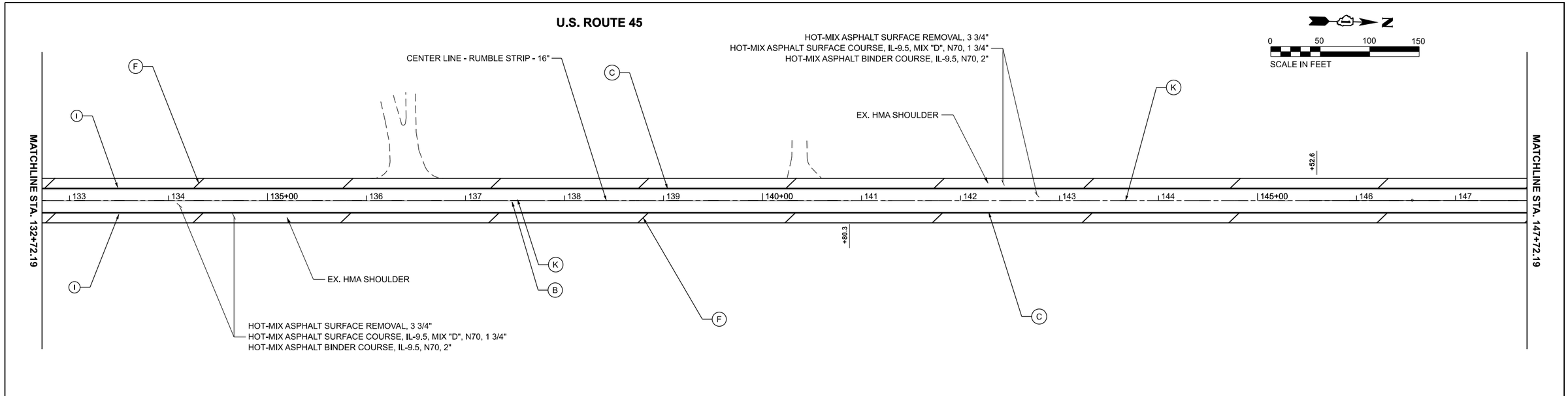

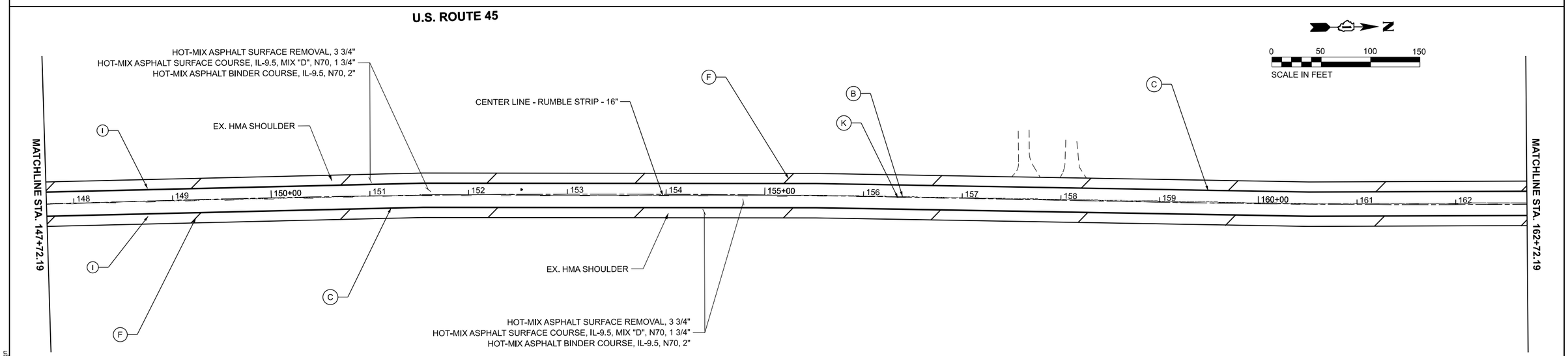

PAVEMENT STRIPING LEGEND

- (A) — THERMOPLASTIC PAVEMENT MARKING - LINE 4" (SOLID YELLOW DOUBLE CENTERLINE)
- (B) — HOT-SPRAY THERMOPLASTIC PAVEMENT MARKING - LINE 4" (SOLID YELLOW)
- (C) — THERMOPLASTIC PAVEMENT MARKING - LINE 4" (SOLID WHITE)
- (D) — THERMOPLASTIC PAVEMENT MARKING - LINE 6" (SOLID WHITE)
- (E) — THERMOPLASTIC PAVEMENT MARKING - LINE 6" (WHITE SKIP DASH 2' DASH @ 6' SKIP)
- (F) — THERMOPLASITC PAVEMENT MARKING - LINE 12" (SOLID WHITE)
- (G) — THERMOPLASTIC PAVEMENT MARKING - LINE 24" (SOLID WHITE STOP BAR)
- (H) — THERMOPLASTIC PAVEMENT MARKING - LETTERS AND SYMBOLS
- (I) — SHOULDER RUMBLE STRIPS, 8"
- (J) — CENTERLINE RUMBLE STRIPS, 16" AND HOT-SPRAY THERMOPLASTIC PAVEMENT MARKING LINE - 4"
- (K) — THERMOPLASTIC PAVEMENT MARKING - LINE 4" (YELLOW SKIP DASH, 10' LINE @ 30' SPACING)

NOTES:

1. LIMITS OF RESURFACING ON SIDE STREETS THROUGHOUT THE PROJECT SHALL BE TO THE RADIUS OF RETURN, UNLESS OTHERWISE SHOWN ON THE PLANS, OR AS DIRECTED BY THE ENGINEER.
2. ALL FINAL PAVEMENT MARKINGS SHALL BE THERMOPLASTIC PAVEMENT MARKINGS (OF THE EXTRUDED TYPE) ON HMA PAVEMENTS.
3. ALL FINAL PAVEMENT MARKINGS SHALL BE PLACED IN ACCORDANCE WITH TC-13 "DISTRICT ONE TYPICAL PAVEMENT MARKIGNS" STANDARD DETAIL.
4. ALL RAISED REFLECTIVE PAVEMENT MARKIGNS SHALL BE PLACED IN ACCORDANCE WITH TC-11 "TYPICAL APPLICATIONS RAISED REFLECTIVE PAVEMENT MARKERS (SNOW-PLOW RESISTANT)" STANDARD DETAIL.

1 REVISED ENTIRE SHEET 8/20/2025

MODEL: ExCL21 - Plan 5 [Sheet]
FILE NAME: c:\pw_work\pwidot\jammal.alramahi@illinois.gov\d1011849\D121724-sht-plan.dgn

USER NAME = jammal.alramahi	DESIGNED -	REVISED -	
	DRAWN -	REVISED -	
	CHECKED -	REVISED -	
PLOT DATE = 8/13/2025	DATE -	REVISED -	

STATE OF ILLINOIS
DEPARTMENT OF TRANSPORTATION

US 45/52 - N OF MONEE MANHATTAN RD TO WILMINGTON PEOTONE RD
ROADWAY & PAVEMENT STRIPING PLANS

SCALE: | SHEET 3 OF 13 SHEETS | STA. 132+72.19 TO STA. 162+72.19

F.A.P. RTE.	SECTION	COUNTY	TOTAL SHEETS	SHEET NO.
330	2024-981-RS	WILL	166	20

CONTRACT NO. 62X01

ILLINOIS | FED. AID PROJECT

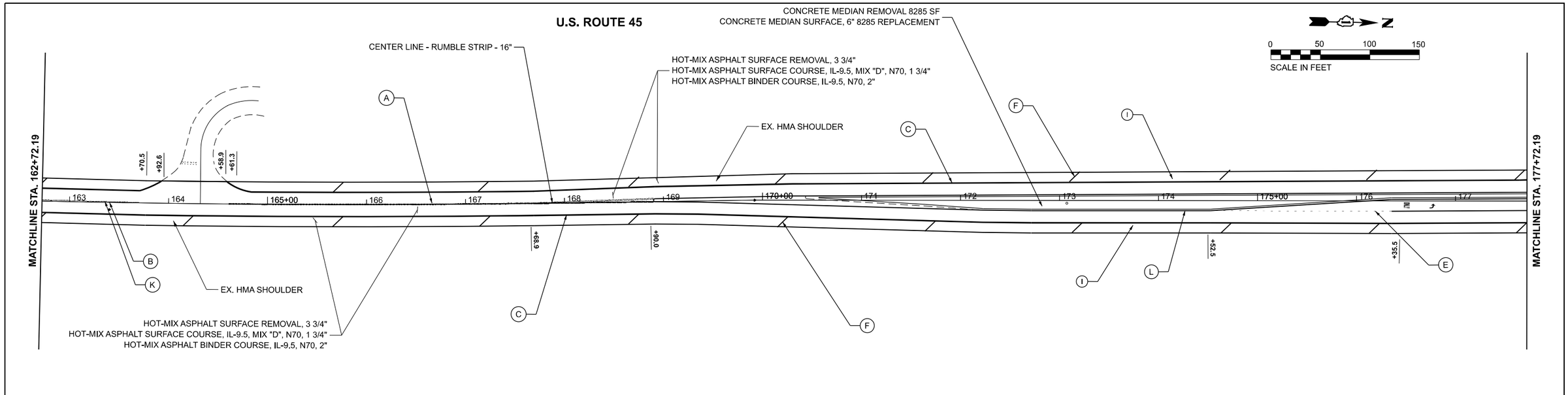

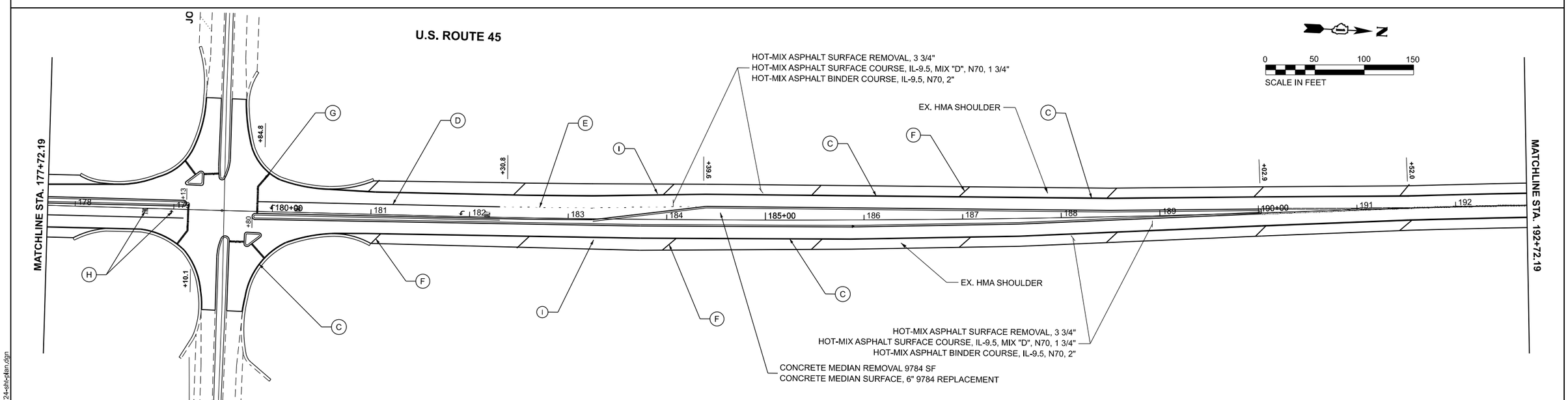

PAVEMENT STRIPING LEGEND

- (A) — THERMOPLASTIC PAVEMENT MARKING - LINE 4" (SOLID YELLOW DOUBLE CENTERLINE)
- (B) — HOT-SPRAY THERMOPLASTIC PAVEMENT MARKING - LINE 4" (SOLID YELLOW)
- (C) — THERMOPLASTIC PAVEMENT MARKING - LINE 4" (SOLID WHITE)
- (D) — THERMOPLASTIC PAVEMENT MARKING - LINE 6" (SOLID WHITE)
- (E) — THERMOPLASTIC PAVEMENT MARKING - LINE 6" (WHITE SKIP DASH 2' DASH @ 6' SKIP)
- (F) — THERMOPLASITC PAVEMENT MARKING - LINE 12" (SOLID WHITE)
- (G) — THERMOPLASTIC PAVEMENT MARKING - LINE 24" (SOLID WHITE STOP BAR)
- (H) — THERMOPLASTIC PAVEMENT MARKING - LETTERS AND SYMBOLS
- (I) — SHOULDER RUMBLE STRIPS, 8"
- (J) — CENTERLINE RUMBLE STRIPS, 16" AND HOT-SPRAY THERMOPLASTIC PAVEMENT MARKING LINE - 4"
- (K) — THERMOPLASTIC PAVEMENT MARKING - LINE 4" (YELLOW SKIP DASH, 10' LINE @ 30' SPACING)

NOTES:

1. LIMITS OF RESURFACING ON SIDE STREETS THROUGHOUT THE PROJECT SHALL BE TO THE RADIUS OF RETURN, UNLESS OTHERWISE SHOWN ON THE PLANS, OR AS DIRECTED BY THE ENGINEER.
2. ALL FINAL PAVEMENT MARKINGS SHALL BE THERMOPLASTIC PAVEMENT MARKINGS (OF THE EXTRUDED TYPE) ON HMA PAVEMENTS.
3. ALL FINAL PAVEMENT MARKINGS SHALL BE PLACED IN ACCORDANCE WITH TC-13 "DISTRICT ONE TYPICAL PAVEMENT MARKIGNS" STANDARD DETAIL.
4. ALL RAISED REFLECTIVE PAVEMENT MARKIGNS SHALL BE PLACED IN ACCORDANCE WITH TC-11 "TYPICAL APPLICATIONS RAISED REFLECTIVE PAVEMENT MARKERS (SNOW-PLOW RESISTANT)" STANDARD DETAIL.

1 REVISED ENTIRE SHEET 8/20/2025

MODEL: ExCL21 - Plan 7 [Sheet]
FILE NAME: c:\pw_work\pwidot\jammal.alramahi\d1011849\D121724-sht-plan.dgn

USER NAME = jammal.alramahi	DESIGNED -	REVISED -	
	DRAWN -	REVISED -	
	CHECKED -	REVISED -	
PLOT DATE = 8/13/2025	DATE -	REVISED -	

STATE OF ILLINOIS
DEPARTMENT OF TRANSPORTATION

US 45/52 - N OF MONEE MANHATTAN RD TO WILMINGTON PEOTONE RD
ROADWAY & PAVEMENT STRIPING PLANS

SCALE: | SHEET 4 OF 13 SHEETS | STA. 162+72.19 TO STA. 192+72.19

F.A.P. RTE.	SECTION	COUNTY	TOTAL SHEETS	SHEET NO.
330	2024-981-RS	WILL	166	21
		CONTRACT NO. 62X01		
		ILLINOIS	FED. AID PROJECT	

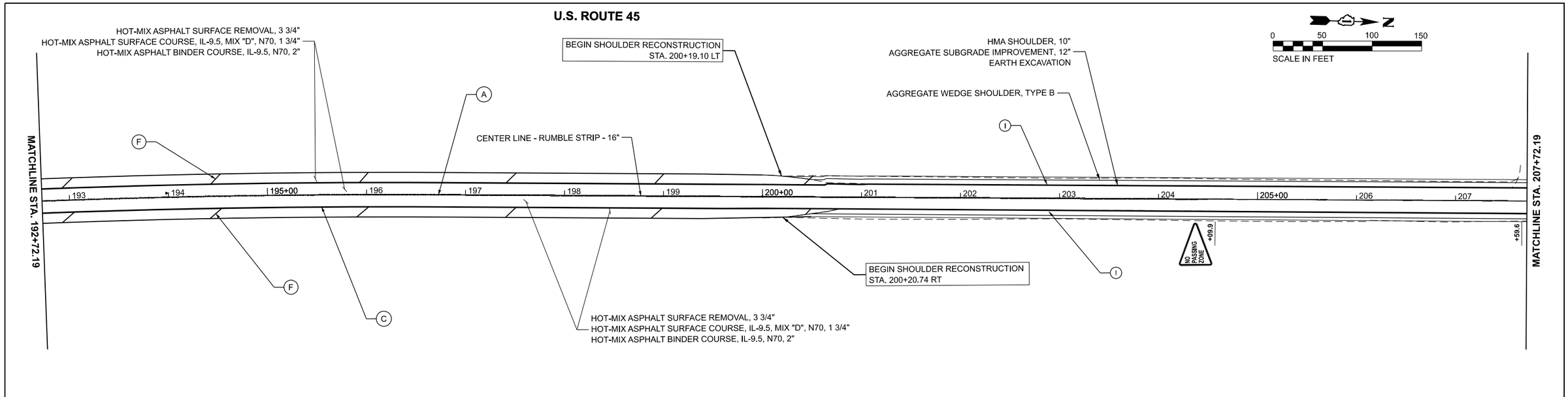

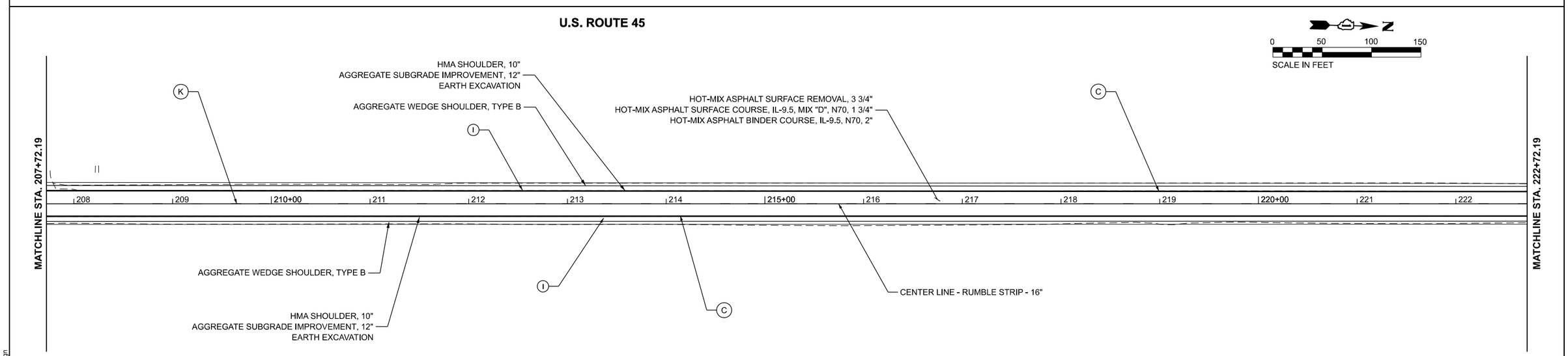

PAVEMENT STRIPING LEGEND

- (A) THERMOPLASTIC PAVEMENT MARKING - LINE 4" (SOLID YELLOW DOUBLE CENTERLINE)
- (B) HOT-SPRAY THERMOPLASTIC PAVEMENT MARKING - LINE 4" (SOLID YELLOW)
- (C) THERMOPLASTIC PAVEMENT MARKING - LINE 4" (SOLID WHITE)
- (D) THERMOPLASTIC PAVEMENT MARKING - LINE 6" (SOLID WHITE)
- (E) THERMOPLASTIC PAVEMENT MARKING - LINE 6" (WHITE SKIP DASH 2' DASH @ 6' SKIP)
- (F) THERMOPLASITC PAVEMENT MARKING - LINE 12" (SOLID WHITE)
- (G) THERMOPLASTIC PAVEMENT MARKING - LINE 24" (SOLID WHITE STOP BAR)
- (H) THERMOPLASTIC PAVEMENT MARKING - LETTERS AND SYMBOLS
- (I) SHOULDER RUMBLE STRIPS, 8"
- (J) CENTERLINE RUMBLE STRIPS, 16" AND HOT-SPRAY THERMOPLASTIC PAVEMENT MARKING LINE - 4"
- (K) THERMOPLASTIC PAVEMENT MARKING - LINE 4" (YELLOW SKIP DASH, 10' LINE @ 30' SPACING)

NOTES:

1. LIMITS OF RESURFACING ON SIDE STREETS THROUGHOUT THE PROJECT SHALL BE TO THE RADIUS OF RETURN, UNLESS OTHERWISE SHOWN ON THE PLANS, OR AS DIRECTED BY THE ENGINEER.
2. ALL FINAL PAVEMENT MARKINGS SHALL BE THERMOPLASTIC PAVEMENT MARKINGS (OF THE EXTRUDED TYPE) ON HMA PAVEMENTS.
3. ALL FINAL PAVEMENT MARKINGS SHALL BE PLACED IN ACCORDANCE WITH TC-13 "DISTRICT ONE TYPICAL PAVEMENT MARKIGNS" STANDARD DETAIL.
4. ALL RAISED REFLECTIVE PAVEMENT MARKIGNS SHALL BE PLACED IN ACCORDANCE WITH TC-11 "TYPICAL APPLICATIONS RAISED REFLECTIVE PAVEMENT MARKERS (SNOW-PLOW RESISTANT)" STANDARD DETAIL.

1 REVISED ENTIRE SHEET 8/20/2025

MODEL: ExCL21 - Plan 9 [Sheet]
FILE NAME: c:\pw_work\pwidot\jammal.alramahi\d1011849\D121724-sht-plan.dgn

USER NAME = jammal.alramahi	DESIGNED -	REVISED -	
	DRAWN -	REVISED -	
	CHECKED -	REVISED -	
PLOT DATE = 8/13/2025	DATE -	REVISED -	

STATE OF ILLINOIS
DEPARTMENT OF TRANSPORTATION

US 45/52 - N OF MONEE MANHATTAN RD TO WILMINGTON PEOTONE RD
ROADWAY & PAVEMENT STRIPING PLANS

SCALE: | SHEET 5 OF 13 SHEETS | STA. 192+72.19 TO STA. 222+72.19

F.A.P. RTE.	SECTION	COUNTY	TOTAL SHEETS	SHEET NO.
330	2024-981-RS	WILL	166	22

CONTRACT NO. 62X01

ILLINOIS | FED. AID PROJECT

U.S. ROUTE 45

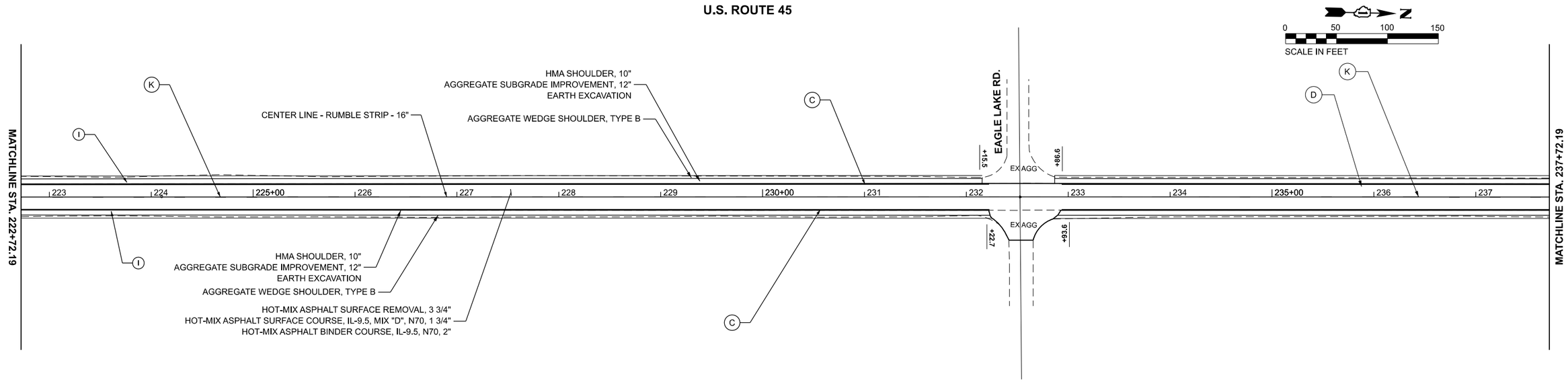

U.S. ROUTE 45

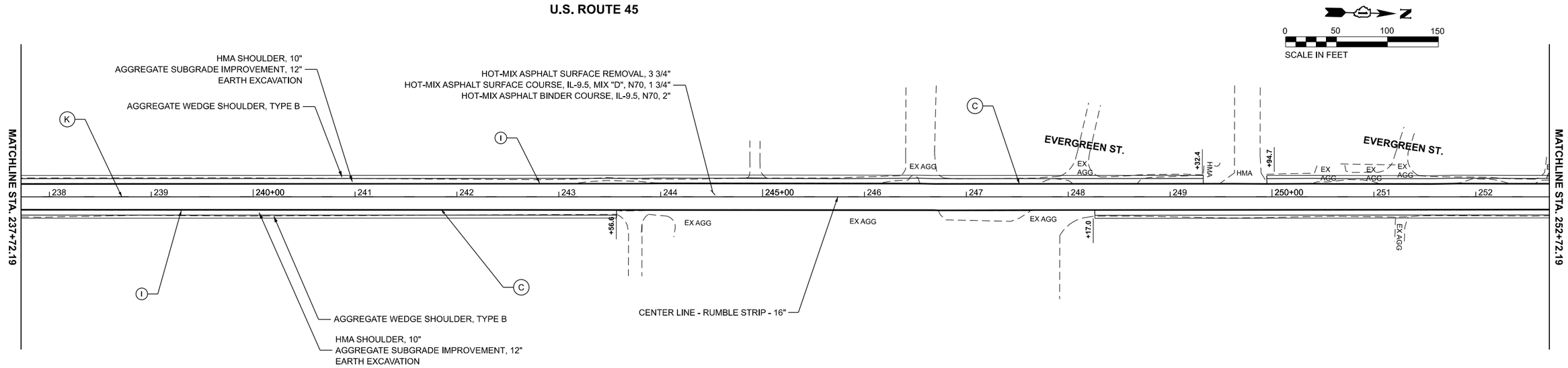

PAVEMENT STRIPING LEGEND

- (A) — THERMOPLASTIC PAVEMENT MARKING - LINE 4" (SOLID YELLOW DOUBLE CENTERLINE)
- (B) — HOT-SPRAY THERMOPLASTIC PAVEMENT MARKING - LINE 4" (SOLID YELLOW)
- (C) — THERMOPLASTIC PAVEMENT MARKING - LINE 4" (SOLID WHITE)
- (D) — THERMOPLASTIC PAVEMENT MARKING - LINE 6" (SOLID WHITE)
- (E) — THERMOPLASTIC PAVEMENT MARKING - LINE 6" (WHITE SKIP DASH 2' DASH @ 6' SKIP)
- (F) — THERMOPLASITC PAVEMENT MARKING - LINE 12" (SOLID WHITE)
- (G) — THERMOPLASTIC PAVEMENT MARKING - LINE 24" (SOLID WHITE STOP BAR)
- (H) — THERMOPLASTIC PAVEMENT MARKING - LETTERS AND SYMBOLS
- (I) — SHOULDER RUMBLE STRIPS, 8"
- (J) — CENTERLINE RUMBLE STRIPS, 16" AND HOT-SPRAY THERMOPLASTIC PAVEMENT MARKING LINE - 4"
- (K) — THERMOPLASTIC PAVEMENT MARKING - LINE 4" (YELLOW SKIP DASH, 10' LINE @ 30' SPACING)

NOTES:

1. LIMITS OF RESURFACING ON SIDE STREETS THROUGHOUT THE PROJECT SHALL BE TO THE RADIUS OF RETURN, UNLESS OTHERWISE SHOWN ON THE PLANS, OR AS DIRECTED BY THE ENGINEER.
2. ALL FINAL PAVEMENT MARKINGS SHALL BE THERMOPLASTIC PAVEMENT MARKINGS (OF THE EXTRUDED TYPE) ON HMA PAVEMENTS.
3. ALL FINAL PAVEMENT MARKINGS SHALL BE PLACED IN ACCORDANCE WITH TC-13 "DISTRICT ONE TYPICAL PAVEMENT MARKIGNS" STANDARD DETAIL.
4. ALL RAISED REFLECTIVE PAVEMENT MARKIGNS SHALL BE PLACED IN ACCORDANCE WITH TC-11 "TYPICAL APPLICATIONS RAISED REFLECTIVE PAVEMENT MARKERS (SNOW-PLOW RESISTANT)" STANDARD DETAIL.

1 REVISED ENTIRE SHEET 8/20/2025

MODEL: ExCL21 - Plan 11 [Sheet]
FILE NAME: c:\pw_work\pwidot\jammal.alramahi\d1011849\D121724-sht-plan.dgn

USER NAME = jammal.alramahi	DESIGNED -	REVISED -	
	DRAWN -	REVISED -	
	CHECKED -	REVISED -	
PLOT DATE = 8/13/2025	DATE -	REVISED -	

STATE OF ILLINOIS
DEPARTMENT OF TRANSPORTATION

US 45/52 - N OF MONEE MANHATTAN RD TO WILMINGTON PEOTONE RD
ROADWAY & PAVEMENT STRIPING PLANS

SCALE: | SHEET 6 OF 13 SHEETS | STA. 222+72.19 TO STA. 252+72.19

F.A.P. RTE.	SECTION	COUNTY	TOTAL SHEETS	SHEET NO.
330	2024-981-RS	WILL	166	23

CONTRACT NO. 62X01

ILLINOIS | FED. AID PROJECT

U.S. ROUTE 45

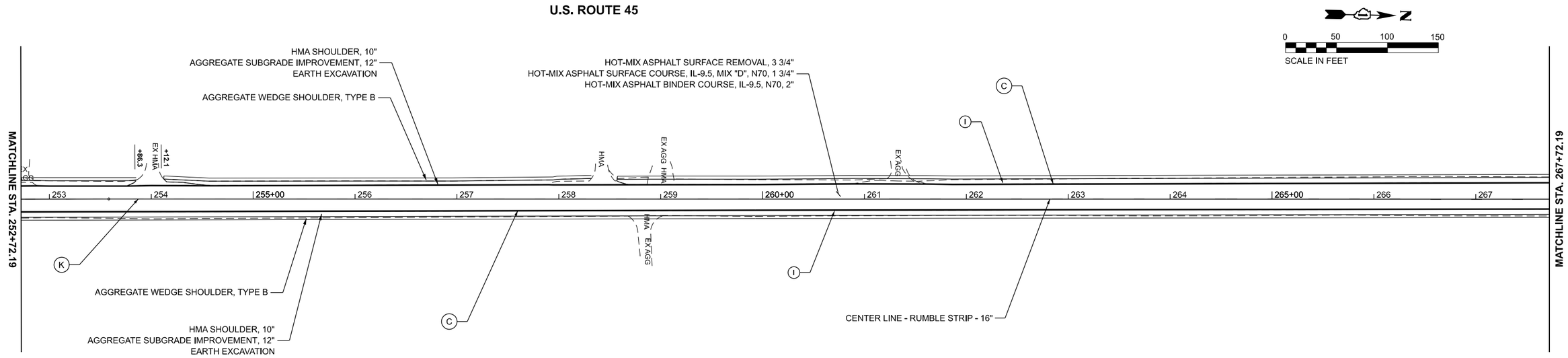

U.S. ROUTE 45

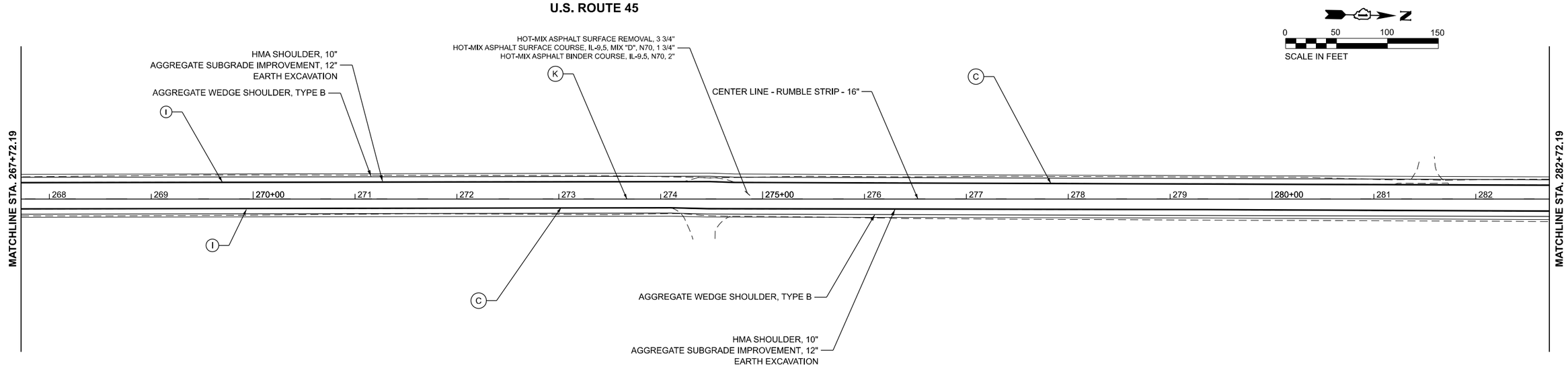

PAVEMENT STRIPING LEGEND

- (A) THERMOPLASTIC PAVEMENT MARKING - LINE 4" (SOLID YELLOW DOUBLE CENTERLINE)
- (B) HOT-SPRAY THERMOPLASTIC PAVEMENT MARKING - LINE 4" (SOLID YELLOW)
- (C) THERMOPLASTIC PAVEMENT MARKING - LINE 4" (SOLID WHITE)
- (D) THERMOPLASTIC PAVEMENT MARKING - LINE 6" (SOLID WHITE)
- (E) THERMOPLASTIC PAVEMENT MARKING - LINE 6" (WHITE SKIP DASH 2' DASH @ 6' SKIP)
- (F) THERMOPLASITC PAVEMENT MARKING - LINE 12" (SOLID WHITE)
- (G) THERMOPLASTIC PAVEMENT MARKING - LINE 24" (SOLID WHITE STOP BAR)
- (H) THERMOPLASTIC PAVEMENT MARKING - LETTERS AND SYMBOLS
- (I) SHOULDER RUMBLE STRIPS, 8"
- (J) CENTERLINE RUMBLE STRIPS, 16" AND HOT-SPRAY THERMOPLASTIC PAVEMENT MARKING LINE - 4"
- (K) THERMOPLASTIC PAVEMENT MARKING - LINE 4" (YELLOW SKIP DASH, 10' LINE @ 30' SPACING)

NOTES:

1. LIMITS OF RESURFACING ON SIDE STREETS THROUGHOUT THE PROJECT SHALL BE TO THE RADIUS OF RETURN, UNLESS OTHERWISE SHOWN ON THE PLANS, OR AS DIRECTED BY THE ENGINEER.
2. ALL FINAL PAVEMENT MARKINGS SHALL BE THERMOPLASTIC PAVEMENT MARKINGS (OF THE EXTRUDED TYPE) ON HMA PAVEMENTS.
3. ALL FINAL PAVEMENT MARKINGS SHALL BE PLACED IN ACCORDANCE WITH TC-13 "DISTRICT ONE TYPICAL PAVEMENT MARKIGNS" STANDARD DETAIL.
4. ALL RAISED REFLECTIVE PAVEMENT MARKIGNS SHALL BE PLACED IN ACCORDANCE WITH TC-11 "TYPICAL APPLICATIONS RAISED REFLECTIVE PAVEMENT MARKERS (SNOW-PLOW RESISTANT)" STANDARD DETAIL.

(1) REVISED ENTIRE SHEET 8/20/2025

MODEL: ExCL21 - Plan 13 [Sheet]
FILE NAME: c:\pw_work\pwidot\jammal.alramahi@illinois.gov\d1011849\D121724-sht-plan.dgn

USER NAME = jammal.alramahi	DESIGNED -	REVISED -	
	DRAWN -	REVISED -	
	CHECKED -	REVISED -	
PLOT DATE = 8/13/2025	DATE -	REVISED -	

STATE OF ILLINOIS
DEPARTMENT OF TRANSPORTATION

US 45/52 - N OF MONEE MANHATTAN RD TO WILMINGTON PEOTONE RD
ROADWAY & PAVEMENT STRIPING PLANS

SCALE: | SHEET 7 OF 13 SHEETS | STA. 252+72.19 TO STA. 282+72.19

F.A.P. RTE.	SECTION	COUNTY	TOTAL SHEETS	SHEET NO.
330	2024-981-RS	WILL	166	24

CONTRACT NO. 62X01

ILLINOIS | FED. AID PROJECT

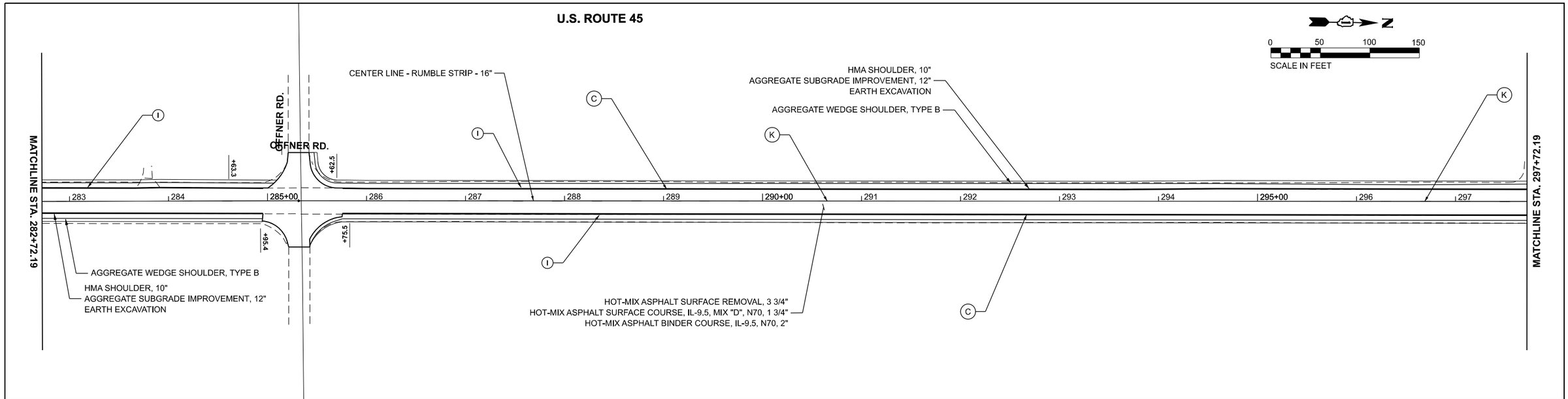

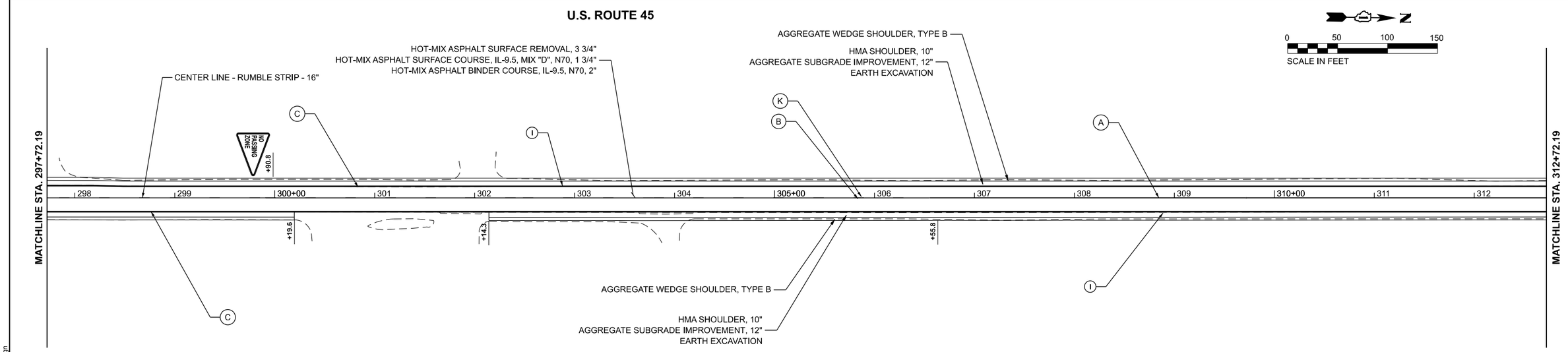

PAVEMENT STRIPING LEGEND

- (A) — THERMOPLASTIC PAVEMENT MARKING - LINE 4" (SOLID YELLOW DOUBLE CENTERLINE)
- (B) — HOT-SPRAY THERMOPLASTIC PAVEMENT MARKING - LINE 4" (SOLID YELLOW)
- (C) — THERMOPLASTIC PAVEMENT MARKING - LINE 4" (SOLID WHITE)
- (D) — THERMOPLASTIC PAVEMENT MARKING - LINE 6" (SOLID WHITE)
- (E) — THERMOPLASTIC PAVEMENT MARKING - LINE 6" (WHITE SKIP DASH 2' DASH @ 6' SKIP)
- (F) — THERMOPLASITC PAVEMENT MARKING - LINE 12" (SOLID WHITE)
- (G) — THERMOPLASTIC PAVEMENT MARKING - LINE 24" (SOLID WHITE STOP BAR)
- (H) — THERMOPLASTIC PAVEMENT MARKING - LETTERS AND SYMBOLS
- (I) — SHOULDER RUMBLE STRIPS, 8"
- (J) — CENTERLINE RUMBLE STRIPS, 16" AND HOT-SPRAY THERMOPLASTIC PAVEMENT MARKING LINE - 4"
- (K) — THERMOPLASTIC PAVEMENT MARKING - LINE 4" (YELLOW SKIP DASH, 10' LINE @ 30' SPACING)

NOTES:

1. LIMITS OF RESURFACING ON SIDE STREETS THROUGHOUT THE PROJECT SHALL BE TO THE RADIUS OF RETURN, UNLESS OTHERWISE SHOWN ON THE PLANS, OR AS DIRECTED BY THE ENGINEER.
2. ALL FINAL PAVEMENT MARKINGS SHALL BE THERMOPLASTIC PAVEMENT MARKINGS (OF THE EXTRUDED TYPE) ON HMA PAVEMENTS.
3. ALL FINAL PAVEMENT MARKINGS SHALL BE PLACED IN ACCORDANCE WITH TC-13 "DISTRICT ONE TYPICAL PAVEMENT MARKIGNS" STANDARD DETAIL.
4. ALL RAISED REFLECTIVE PAVEMENT MARKIGNS SHALL BE PLACED IN ACCORDANCE WITH TC-11 "TYPICAL APPLICATIONS RAISED REFLECTIVE PAVEMENT MARKERS (SNOW-PLOW RESISTANT)" STANDARD DETAIL.

1 REVISED ENTIRE SHEET 8/20/2025

MODEL: ExCL21 - Plan 15 [Sheet]
FILE NAME: c:\pw_work\pwidot\jammal.alramahi@illinois.gov\d1011849\D121724-sht-plan.dgn

USER NAME = jammal.alramahi	DESIGNED -	REVISED -	
	DRAWN -	REVISED -	
	CHECKED -	REVISED -	
PLOT DATE = 8/13/2025	DATE -	REVISED -	

STATE OF ILLINOIS
DEPARTMENT OF TRANSPORTATION

US 45/52 - N OF MONEE MANHATTAN RD TO WILMINGTON PEOTONE RD
ROADWAY & PAVEMENT STRIPING PLANS

SCALE: | SHEET 8 OF 13 SHEETS | STA. 282+72.19 TO STA. 312+72.19

F.A.P. RTE.	SECTION	COUNTY	TOTAL SHEETS	SHEET NO.
330	2024-981-RS	WILL	166	25

CONTRACT NO. 62X01

ILLINOIS | FED. AID PROJECT

U.S. ROUTE 45

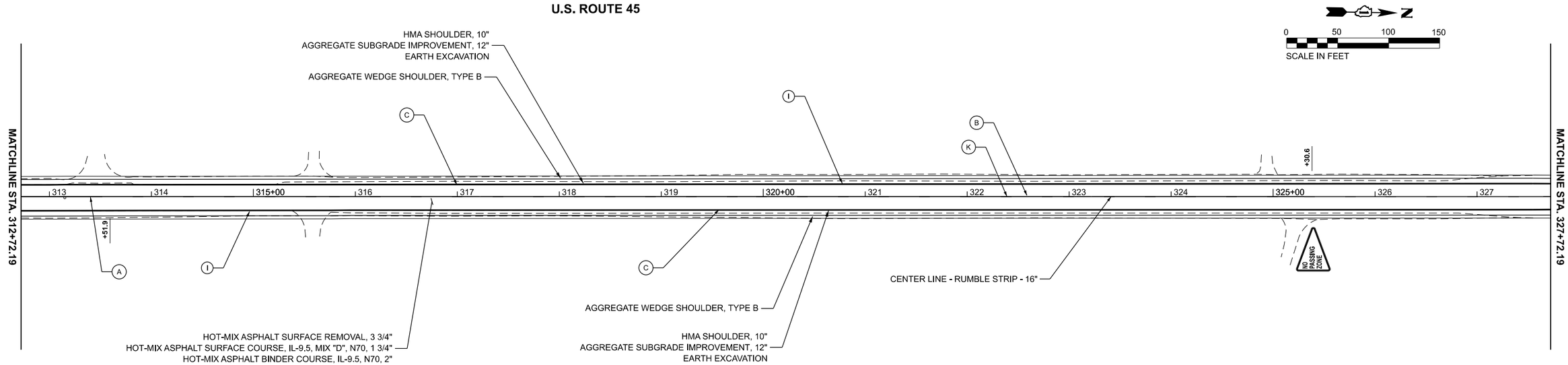

U.S. ROUTE 45

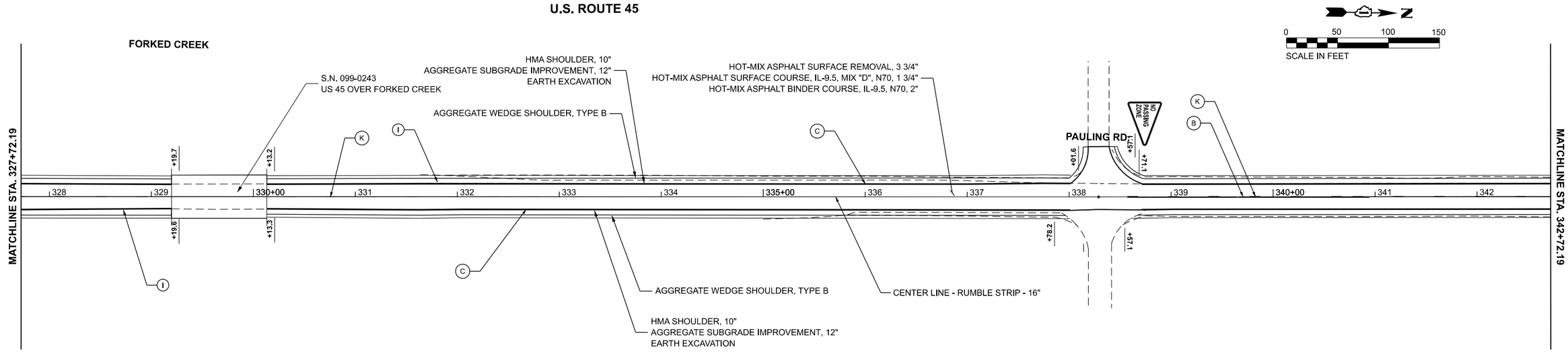

PAVEMENT STRIPING LEGEND

- (A) — THERMOPLASTIC PAVEMENT MARKING - LINE 4" (SOLID YELLOW DOUBLE CENTERLINE)
- (B) — HOT-SPRAY THERMOPLASTIC PAVEMENT MARKING - LINE 4" (SOLID YELLOW)
- (C) — THERMOPLASTIC PAVEMENT MARKING - LINE 4" (SOLID WHITE)
- (D) — THERMOPLASTIC PAVEMENT MARKING - LINE 6" (SOLID WHITE)
- (E) — THERMOPLASTIC PAVEMENT MARKING - LINE 6" (WHITE SKIP DASH 2' DASH @ 6' SKIP)
- (F) — THERMOPLASITC PAVEMENT MARKING - LINE 12" (SOLID WHITE)
- (G) — THERMOPLASTIC PAVEMENT MARKING - LINE 24" (SOLID WHITE STOP BAR)
- (H) — THERMOPLASTIC PAVEMENT MARKING - LETTERS AND SYMBOLS
- (I) — SHOULDER RUMBLE STRIPS, 8"
- (J) — CENTERLINE RUMBLE STRIPS, 16" AND HOT-SPRAY THERMOPLASTIC PAVEMENT MARKING LINE - 4"
- (K) — THERMOPLASTIC PAVEMENT MARKING - LINE 4" (YELLOW SKIP DASH, 10' LINE @ 30' SPACING)

NOTES:

1. LIMITS OF RESURFACING ON SIDE STREETS THROUGHOUT THE PROJECT SHALL BE TO THE RADIUS OF RETURN, UNLESS OTHERWISE SHOWN ON THE PLANS, OR AS DIRECTED BY THE ENGINEER.
2. ALL FINAL PAVEMENT MARKINGS SHALL BE THERMOPLASTIC PAVEMENT MARKINGS (OF THE EXTRUDED TYPE) ON HMA PAVEMENTS.
3. ALL FINAL PAVEMENT MARKINGS SHALL BE PLACED IN ACCORDANCE WITH TC-13 "DISTRICT ONE TYPICAL PAVEMENT MARKIGNS" STANDARD DETAIL.
4. ALL RAISED REFLECTIVE PAVEMENT MARKIGNS SHALL BE PLACED IN ACCORDANCE WITH TC-11 "TYPICAL APPLICATIONS RAISED REFLECTIVE PAVEMENT MARKERS (SNOW-PLOW RESISTANT)" STANDARD DETAIL.

1 REVISED ENTIRE SHEET 8/20/2025

MODEL: ExCL21 - Plan 17 [Sheet]
FILE NAME: c:\pw_work\pwidot\jammal.alramahi@illinois.gov\d1011849\D121724-sht-plan.dgn

USER NAME = jammal.alramahi	DESIGNED -	REVISED -	
	DRAWN -	REVISED -	
	CHECKED -	REVISED -	
PLOT DATE = 8/13/2025	DATE -	REVISED -	

STATE OF ILLINOIS
DEPARTMENT OF TRANSPORTATION

US 45/52 - N OF MONEE MANHATTAN RD TO WILMINGTON PEOTONE RD
ROADWAY & PAVEMENT STRIPING PLANS

SCALE: | SHEET 9 OF 13 SHEETS | STA. 312+72.19 TO STA. 342+72.19

F.A.P. RTE.	SECTION	COUNTY	TOTAL SHEETS	SHEET NO.
330	2024-981-RS	WILL	166	26

CONTRACT NO. 62X01

ILLINOIS | FED. AID PROJECT

U.S. ROUTE 45

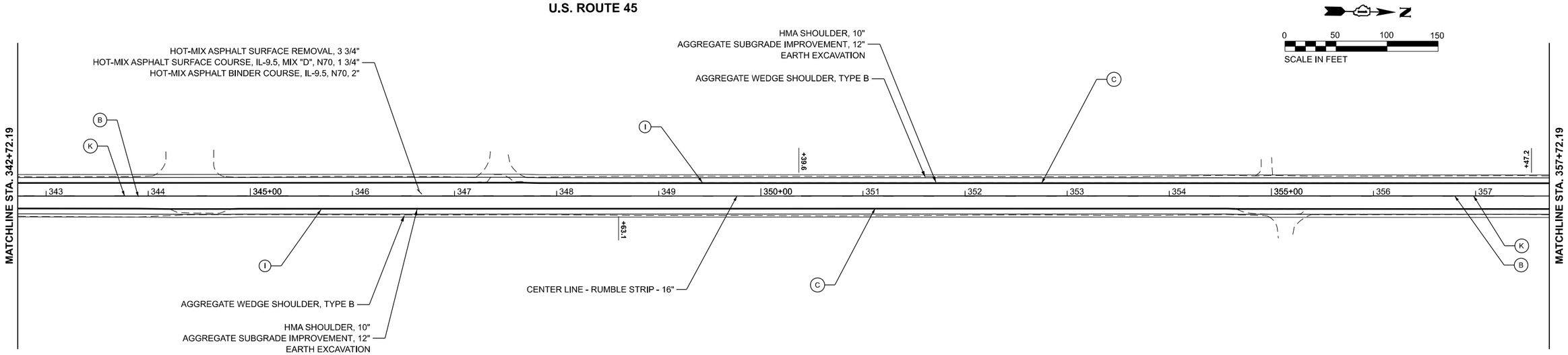

U.S. ROUTE 45

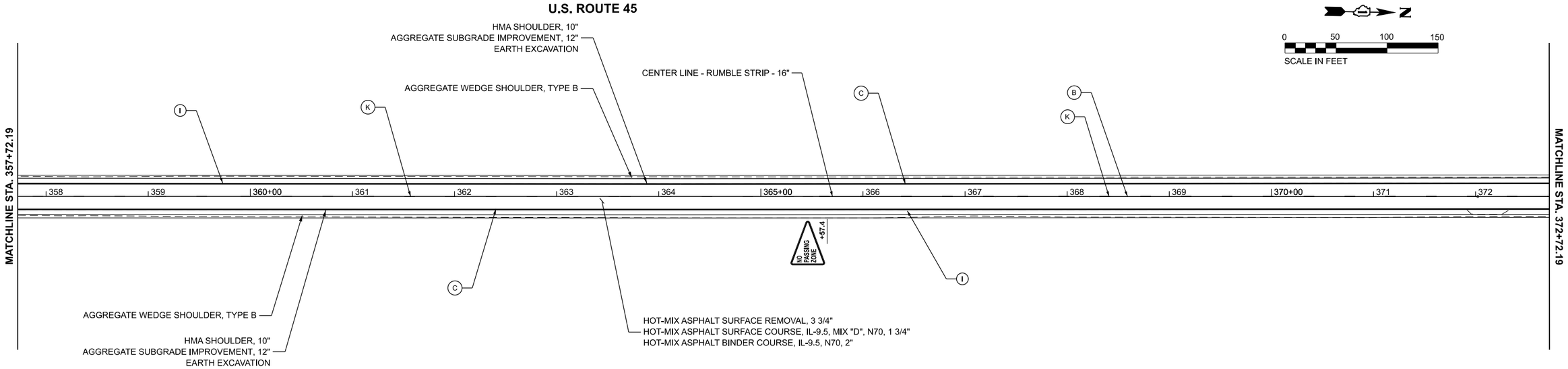

PAVEMENT STRIPING LEGEND

- (A) — THERMOPLASTIC PAVEMENT MARKING - LINE 4" (SOLID YELLOW DOUBLE CENTERLINE)
- (B) — HOT-SPRAY THERMOPLASTIC PAVEMENT MARKING - LINE 4" (SOLID YELLOW)
- (C) — THERMOPLASTIC PAVEMENT MARKING - LINE 4" (SOLID WHITE)
- (D) — THERMOPLASTIC PAVEMENT MARKING - LINE 6" (SOLID WHITE)
- (E) — THERMOPLASTIC PAVEMENT MARKING - LINE 6" (WHITE SKIP DASH 2' DASH @ 6' SKIP)
- (F) — THERMOPLASITC PAVEMENT MARKING - LINE 12" (SOLID WHITE)
- (G) — THERMOPLASTIC PAVEMENT MARKING - LINE 24" (SOLID WHITE STOP BAR)
- (H) — THERMOPLASTIC PAVEMENT MARKING - LETTERS AND SYMBOLS
- (I) — SHOULDER RUMBLE STRIPS, 8"
- (J) — CENTERLINE RUMBLE STRIPS, 16" AND HOT-SPRAY THERMOPLASTIC PAVEMENT MARKING LINE - 4"
- (K) — THERMOPLASTIC PAVEMENT MARKING - LINE 4" (YELLOW SKIP DASH, 10' LINE @ 30' SPACING)

NOTES:

1. LIMITS OF RESURFACING ON SIDE STREETS THROUGHOUT THE PROJECT SHALL BE TO THE RADIUS OF RETURN, UNLESS OTHERWISE SHOWN ON THE PLANS, OR AS DIRECTED BY THE ENGINEER.
2. ALL FINAL PAVEMENT MARKINGS SHALL BE THERMOPLASTIC PAVEMENT MARKINGS (OF THE EXTRUDED TYPE) ON HMA PAVEMENTS.
3. ALL FINAL PAVEMENT MARKINGS SHALL BE PLACED IN ACCORDANCE WITH TC-13 "DISTRICT ONE TYPICAL PAVEMENT MARKIGNS" STANDARD DETAIL.
4. ALL RAISED REFLECTIVE PAVEMENT MARKIGNS SHALL BE PLACED IN ACCORDANCE WITH TC-11 "TYPICAL APPLICATIONS RAISED REFLECTIVE PAVEMENT MARKERS (SNOW-PLOW RESISTANT)" STANDARD DETAIL.

(1) REVISED ENTIRE SHEET 8/20/2025

MODEL: ExCL21 - Plan 19 [Sheet]
FILE NAME: c:\pw_work\pwidot\jammal.alramahi@illinois.gov\d1011849\D121724-sht-plan.dgn

USER NAME = jammal.alramahi	DESIGNED -	REVISED -	
	DRAWN -	REVISED -	
	CHECKED -	REVISED -	
PLOT DATE = 8/13/2025	DATE -	REVISED -	

STATE OF ILLINOIS
DEPARTMENT OF TRANSPORTATION

US 45/52 - N OF MONEE MANHATTAN RD TO WILMINGTON PEOTONE RD
ROADWAY & PAVEMENT STRIPING PLANS

SCALE: | SHEET 10 OF 13 SHEETS | STA. 342+72.19 TO STA. 372+72.19

F.A.P. RTE.	SECTION	COUNTY	TOTAL SHEETS	SHEET NO.
330	2024-981-RS	WILL	166	27

CONTRACT NO. 62X01

ILLINOIS | FED. AID PROJECT

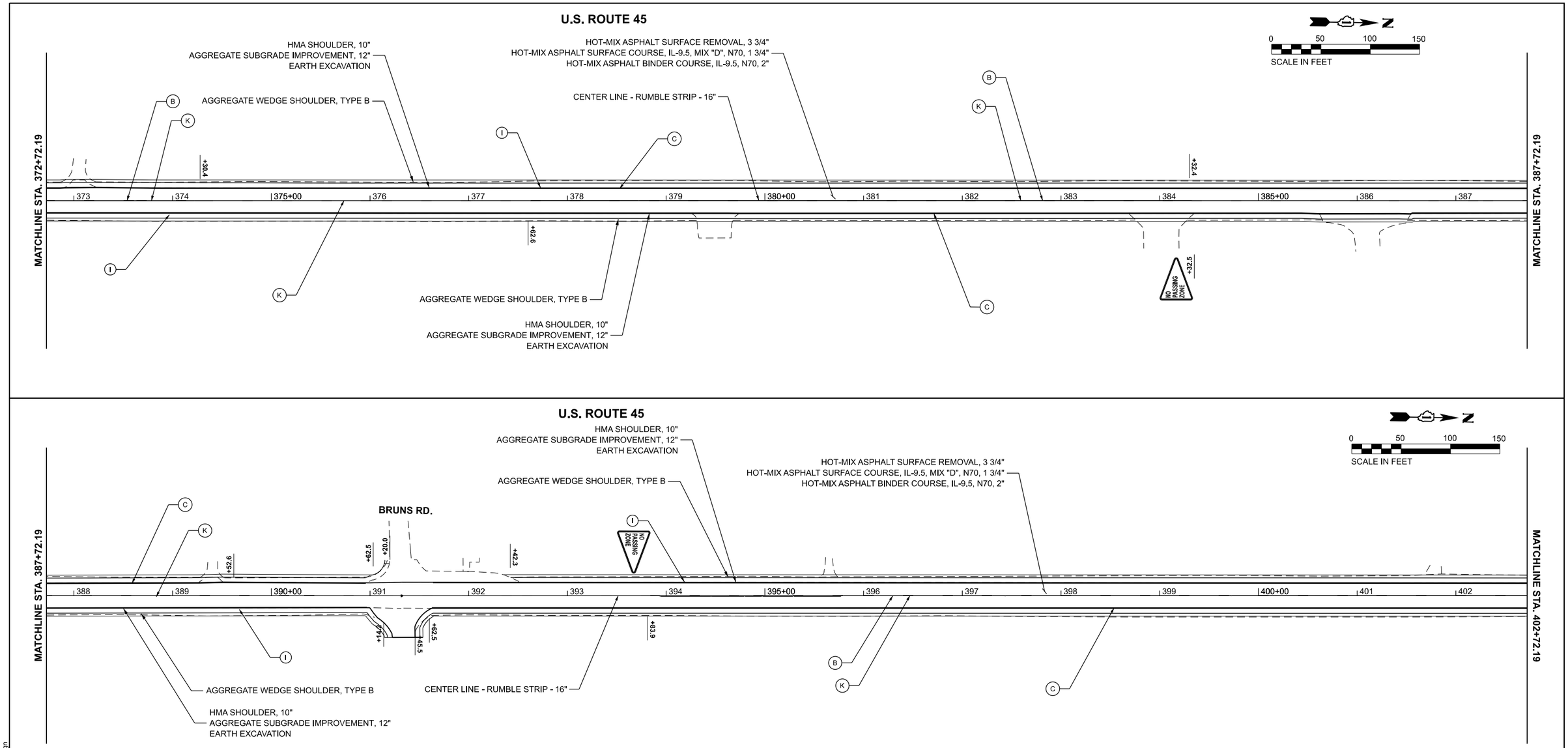

PAVEMENT STRIPING LEGEND

- (A) — THERMOPLASTIC PAVEMENT MARKING - LINE 4" (SOLID YELLOW DOUBLE CENTERLINE)
- (B) — HOT-SPRAY THERMOPLASTIC PAVEMENT MARKING - LINE 4" (SOLID YELLOW)
- (C) — THERMOPLASTIC PAVEMENT MARKING - LINE 4" (SOLID WHITE)
- (D) — THERMOPLASTIC PAVEMENT MARKING - LINE 6" (SOLID WHITE)
- (E) — THERMOPLASTIC PAVEMENT MARKING - LINE 6" (WHITE SKIP DASH 2' DASH @ 6' SKIP)
- (F) — THERMOPLASITC PAVEMENT MARKING - LINE 12" (SOLID WHITE)
- (G) — THERMOPLASTIC PAVEMENT MARKING - LINE 24" (SOLID WHITE STOP BAR)
- (H) — THERMOPLASTIC PAVEMENT MARKING - LETTERS AND SYMBOLS
- (I) — SHOULDER RUMBLE STRIPS, 8"
- (J) — CENTERLINE RUMBLE STRIPS, 16" AND HOT-SPRAY THERMOPLASTIC PAVEMENT MARKING LINE - 4"
- (K) — THERMOPLASTIC PAVEMENT MARKING - LINE 4" (YELLOW SKIP DASH, 10' LINE @ 30' SPACING)

NOTES:

1. LIMITS OF RESURFACING ON SIDE STREETS THROUGHOUT THE PROJECT SHALL BE TO THE RADIUS OF RETURN, UNLESS OTHERWISE SHOWN ON THE PLANS, OR AS DIRECTED BY THE ENGINEER.
2. ALL FINAL PAVEMENT MARKINGS SHALL BE THERMOPLASTIC PAVEMENT MARKINGS (OF THE EXTRUDED TYPE) ON HMA PAVEMENTS.
3. ALL FINAL PAVEMENT MARKINGS SHALL BE PLACED IN ACCORDANCE WITH TC-13 "DISTRICT ONE TYPICAL PAVEMENT MARKIGNS" STANDARD DETAIL.
4. ALL RAISED REFLECTIVE PAVEMENT MARKIGNS SHALL BE PLACED IN ACCORDANCE WITH TC-11 "TYPICAL APPLICATIONS RAISED REFLECTIVE PAVEMENT MARKERS (SNOW-PLOW RESISTANT)" STANDARD DETAIL.

(1) REVISED ENTIRE SHEET 8/20/2025

MODEL: ExCL21 - Plan 21 [Sheet]
FILE NAME: c:\pw_work\pwidot\jammal.alramahi@illinois.gov\d1011849\D121724-sht-plan.dgn

USER NAME = jammal.alramahi	DESIGNED -	REVISED -	
	DRAWN -	REVISED -	
	CHECKED -	REVISED -	
PLOT DATE = 8/13/2025	DATE -	REVISED -	

STATE OF ILLINOIS
DEPARTMENT OF TRANSPORTATION

US 45/52 - N OF MONEE MANHATTAN RD TO WILMINGTON PEOTONE RD
ROADWAY & PAVEMENT STRIPING PLANS

SCALE: | SHEET 11 OF 13 SHEETS | STA. 372+72.19 TO STA. 402+72.19

F.A.P. RTE.	SECTION	COUNTY	TOTAL SHEETS	SHEET NO.
330	2024-981-RS	WILL	166	28

CONTRACT NO. 62X01

ILLINOIS | FED. AID PROJECT

U.S. ROUTE 45

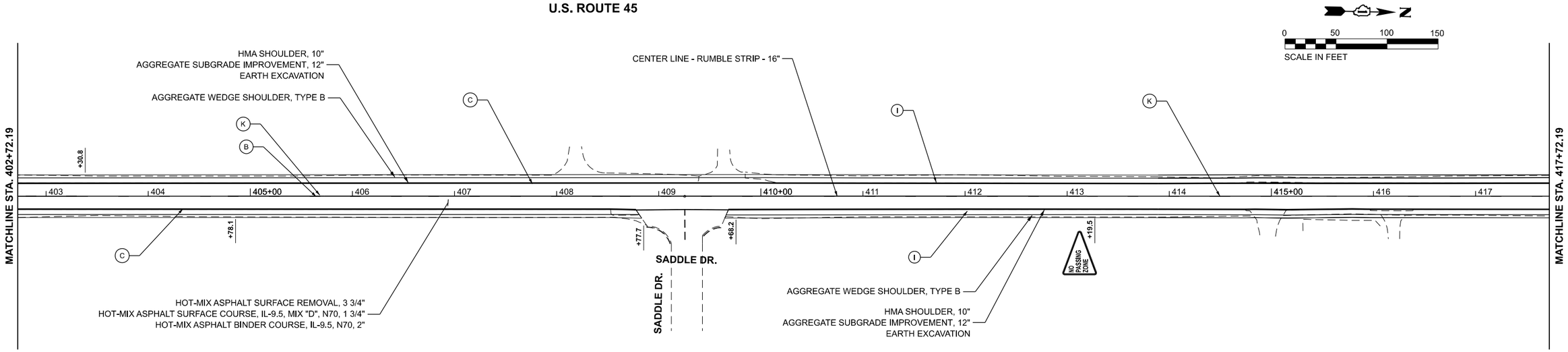

U.S. ROUTE 45

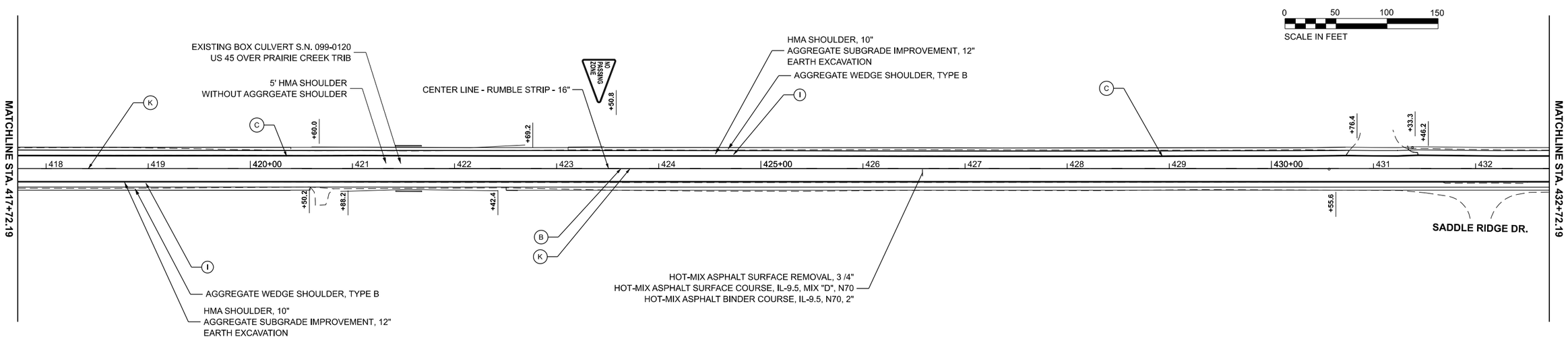

PAVEMENT STRIPING LEGEND

- (A) — THERMOPLASTIC PAVEMENT MARKING - LINE 4" (SOLID YELLOW DOUBLE CENTERLINE)
- (B) — HOT-SPRAY THERMOPLASTIC PAVEMENT MARKING - LINE 4" (SOLID YELLOW)
- (C) — THERMOPLASTIC PAVEMENT MARKING - LINE 4" (SOLID WHITE)
- (D) — THERMOPLASTIC PAVEMENT MARKING - LINE 6" (SOLID WHITE)
- (E) — THERMOPLASTIC PAVEMENT MARKING - LINE 6" (WHITE SKIP DASH 2' DASH @ 6' SKIP)
- (F) — THERMOPLASITC PAVEMENT MARKING - LINE 12" (SOLID WHITE)
- (G) — THERMOPLASTIC PAVEMENT MARKING - LINE 24" (SOLID WHITE STOP BAR)
- (H) — THERMOPLASTIC PAVEMENT MARKING - LETTERS AND SYMBOLS
- (I) — SHOULDER RUMBLE STRIPS, 8"
- (J) — CENTERLINE RUMBLE STRIPS, 16" AND HOT-SPRAY THERMOPLASTIC PAVEMENT MARKING LINE - 4"
- (K) — THERMOPLASTIC PAVEMENT MARKING - LINE 4" (YELLOW SKIP DASH, 10' LINE @ 30' SPACING)

NOTES:

1. LIMITS OF RESURFACING ON SIDE STREETS THROUGHOUT THE PROJECT SHALL BE TO THE RADIUS OF RETURN, UNLESS OTHERWISE SHOWN ON THE PLANS, OR AS DIRECTED BY THE ENGINEER.
2. ALL FINAL PAVEMENT MARKINGS SHALL BE THERMOPLASTIC PAVEMENT MARKINGS (OF THE EXTRUDED TYPE) ON HMA PAVEMENTS.
3. ALL FINAL PAVEMENT MARKINGS SHALL BE PLACED IN ACCORDANCE WITH TC-13 "DISTRICT ONE TYPICAL PAVEMENT MARKIGNS" STANDARD DETAIL.
4. ALL RAISED REFLECTIVE PAVEMENT MARKIGNS SHALL BE PLACED IN ACCORDANCE WITH TC-11 "TYPICAL APPLICATIONS RAISED REFLECTIVE PAVEMENT MARKERS (SNOW-PLOW RESISTANT)" STANDARD DETAIL.

1 REVISED ENTIRE SHEET 8/20/2025

MODEL: ExCL21 - Plan 23 [Sheet]
FILE NAME: c:\pw_work\pwidot\jammal.alramahi@illinois.gov\d1011849\D121724-sht-plan.dgn

USER NAME = jammal.alramahi	DESIGNED -	REVISED -	
	DRAWN -	REVISED -	
	CHECKED -	REVISED -	
PLOT DATE = 8/13/2025	DATE -	REVISED -	

STATE OF ILLINOIS
DEPARTMENT OF TRANSPORTATION

US 45/52 - N OF MONEE MANHATTAN RD TO WILMINGTON PEOTONE RD
ROADWAY & PAVEMENT STRIPING PLANS

SCALE: | SHEET 12 OF 13 SHEETS | STA. 402+72.19 | TO STA. 432+72.19

F.A.P. RTE.	SECTION	COUNTY	TOTAL SHEETS	SHEET NO.
330	2024-981-RS	WILL	166	29
		CONTRACT NO. 62X01		
		ILLINOIS	FED. AID PROJECT	

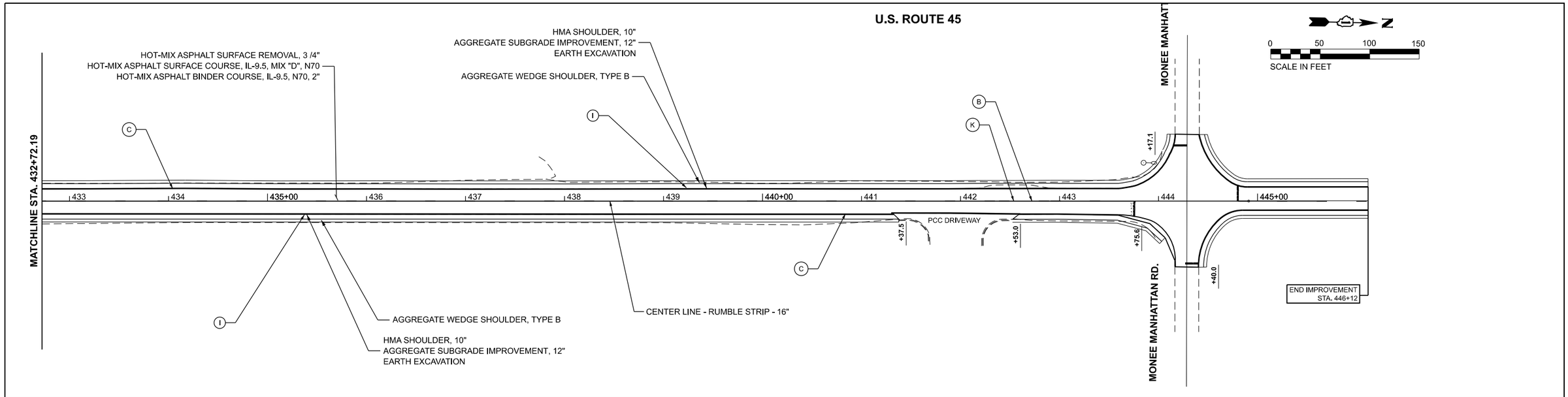

PAVEMENT STRIPING LEGEND

- (A) THERMOPLASTIC PAVEMENT MARKING - LINE 4" (SOLID YELLOW DOUBLE CENTERLINE)
- (B) HOT-SPRAY THERMOPLASTIC PAVEMENT MARKING - LINE 4" (SOLID YELLOW)
- (C) THERMOPLASTIC PAVEMENT MARKING - LINE 4" (SOLID WHITE)
- (D) THERMOPLASTIC PAVEMENT MARKING - LINE 6" (SOLID WHITE)
- (E) THERMOPLASTIC PAVEMENT MARKING - LINE 6" (WHITE SKIP DASH 2' DASH @ 6' SKIP)
- (F) THERMOPLASITC PAVEMENT MARKING - LINE 12" (SOLID WHITE)
- (G) THERMOPLASTIC PAVEMENT MARKING - LINE 24" (SOLID WHITE STOP BAR)
- (H) THERMOPLASTIC PAVEMENT MARKING - LETTERS AND SYMBOLS
- (I) SHOULDER RUMBLE STRIPS, 8"
- (J) CENTERLINE RUMBLE STRIPS, 16" AND HOT-SPRAY THERMOPLASTIC PAVEMENT MARKING LINE - 4"
- (K) THERMOPLASTIC PAVEMENT MARKING - LINE 4" (YELLOW SKIP DASH, 10' LINE @ 30' SPACING)

NOTES:

1. LIMITS OF RESURFACING ON SIDE STREETS THROUGHOUT THE PROJECT SHALL BE TO THE RADIUS OF RETURN, UNLESS OTHERWISE SHOWN ON THE PLANS, OR AS DIRECTED BY THE ENGINEER.
2. ALL FINAL PAVEMENT MARKINGS SHALL BE THERMOPLASTIC PAVEMENT MARKINGS (OF THE EXTRUDED TYPE) ON HMA PAVEMENTS.
3. ALL FINAL PAVEMENT MARKINGS SHALL BE PLACED IN ACCORDANCE WITH TC-13 "DISTRICT ONE TYPICAL PAVEMENT MARKIGNS" STANDARD DETAIL.
4. ALL RAISED REFLECTIVE PAVEMENT MARKIGNS SHALL BE PLACED IN ACCORDANCE WITH TC-11 "TYPICAL APPLICATIONS RAISED REFLECTIVE PAVEMENT MARKERS (SNOW-PLOW RESISTANT)" STANDARD DETAIL.

1 REVISED ENTIRE SHEET 8/20/2025

USER NAME = jammal.alramahi	DESIGNED -	REVISED -	STATE OF ILLINOIS DEPARTMENT OF TRANSPORTATION
	DRAWN -	REVISED -	
	CHECKED -	REVISED -	
PLOT DATE = 8/13/2025	DATE -	REVISED -	

US 45/52 - N OF MONEE MANHATTAN RD TO WILMINGTON PEOTONE RD
ROADWAY & PAVEMENT STRIPING PLANS

SCALE: | SHEET 13 OF 13 SHEETS | STA. 432+72.19 TO STA. 447+72.19

F.A.P. RTE.	SECTION	COUNTY	TOTAL SHEETS	SHEET NO.
330	2024-981-RS	WILL	166	30

CONTRACT NO. 62X01

ILLINOIS | FED. AID PROJECT

MODEL: ExCL21 - Plan 25 [Sheet]
FILE NAME: c:\pw_work\pwidot\jammal.alramahi@illinois.gov\d1011849\D121724-sht-plan.dgn