F.A.U. ROUTE NO.	SECTION	COUNTY	TOTAL SHEETS	SHEET NO.
2552	•	DUPAGE	563	317
FED. ROAD DIST. NO.		ILLINOIS	FED. AID PROJECT	

SHEET NO. - 3
50 - SHEETS

• 00-00114-00-PV CONTRACT NO. 63024

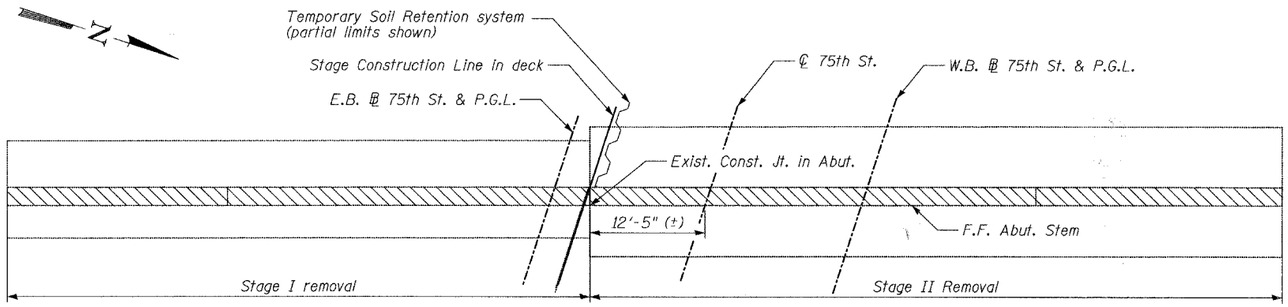

PLAN - WEST ABUTMENT

(See Elevation - W. Abutment below for vertical limits)

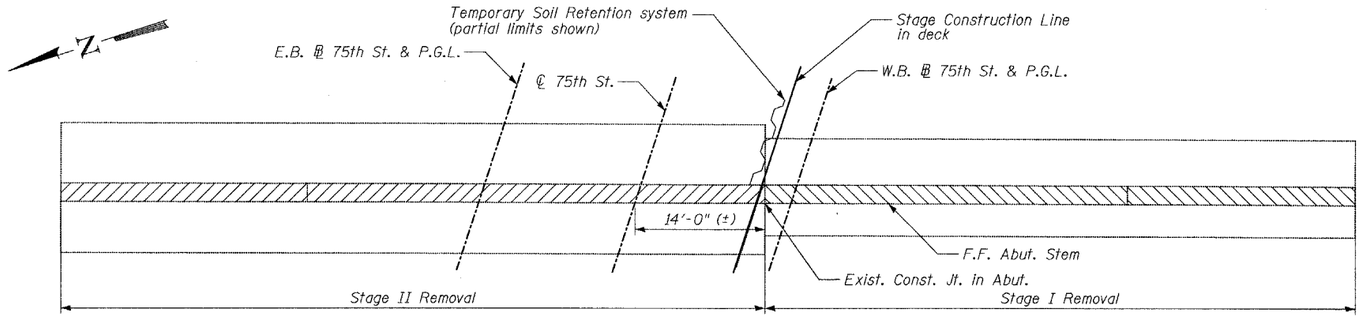

PLAN - EAST ABUTMENT

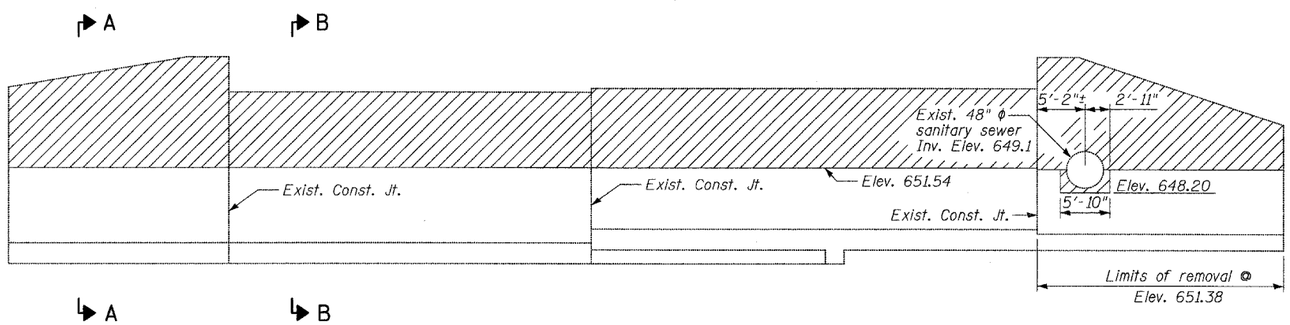

ELEVATION - WEST ABUTMENT

(Indicating limits of abutment stem removal in final configuration. Backwall not shown for clarity)

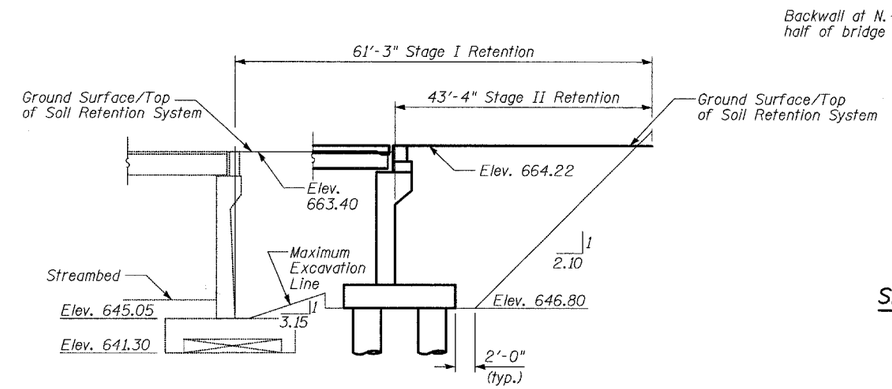

TEMPORARY SOIL RETENTION SYSTEM AT EAST ABUTMENT

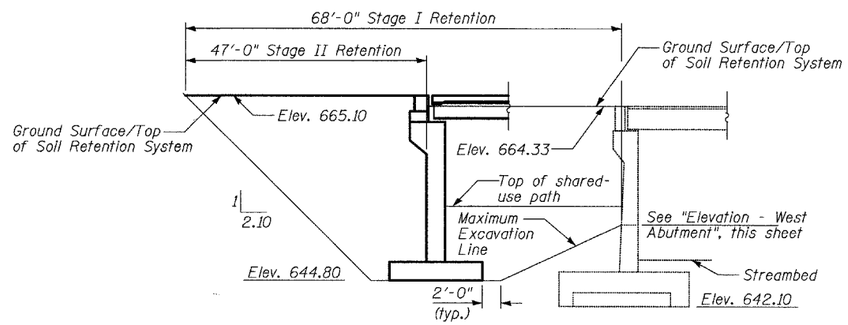

TEMPORARY SOIL RETENTION SYSTEM AT WEST ABUTMENT

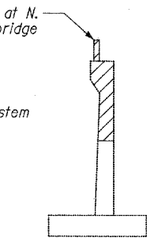

SECTION B-B

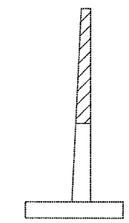

SECTION A-A

NOTES

Denotes concrete removal

NOTES

The Contractor shall connect the first sheet to the existing abutment wall to ensure stability of the sheets driven to the top of the existing footing. This connection shall be reviewed and accepted by the Engineer and included in the cost for Temporary Soil Retention System.

A cantilevered sheet piling design does not appear feasible and additional members or other retention systems may be necessary. The Contractor shall submit a temporary soil retention system design including plan details and calculations for review and acceptance by the Engineer.

All substructure units shall be removed a minimum of 1'-0" below streambed elevation unless otherwise noted.

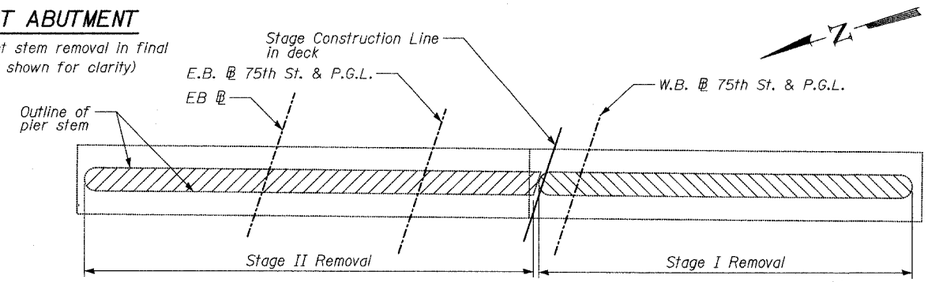

PLAN - PIERS 1 & 2

TY·LIN INTERNATIONAL

DESIGNED -	PL
CHECKED -	SP
DRAWN -	PL
CHECKED -	SP

REVISIONS	
NAME	DATE

STAGE CONSTRUCTION -1

75th STREET OVER THE
WEST BRANCH OF THE DUPAGE RIVER
FAP 369
SECTION 00-00114-00-PV STA. 151+38.03
DUPAGE COUNTY
S.N. 022-3118