

INSIDE ELEVATION OF EAST (LEFT) PARAPET

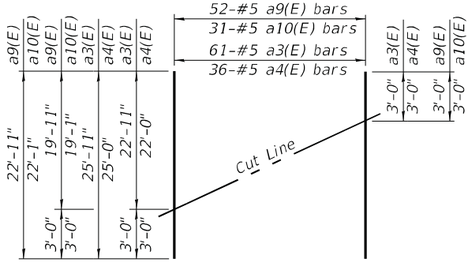

FIELD CUTTING DIAGRAM

Order a3(E), a4(E), a9(E) and a10(E) bars full length. Cut as shown and use remainder of bars in opposite end of deck.

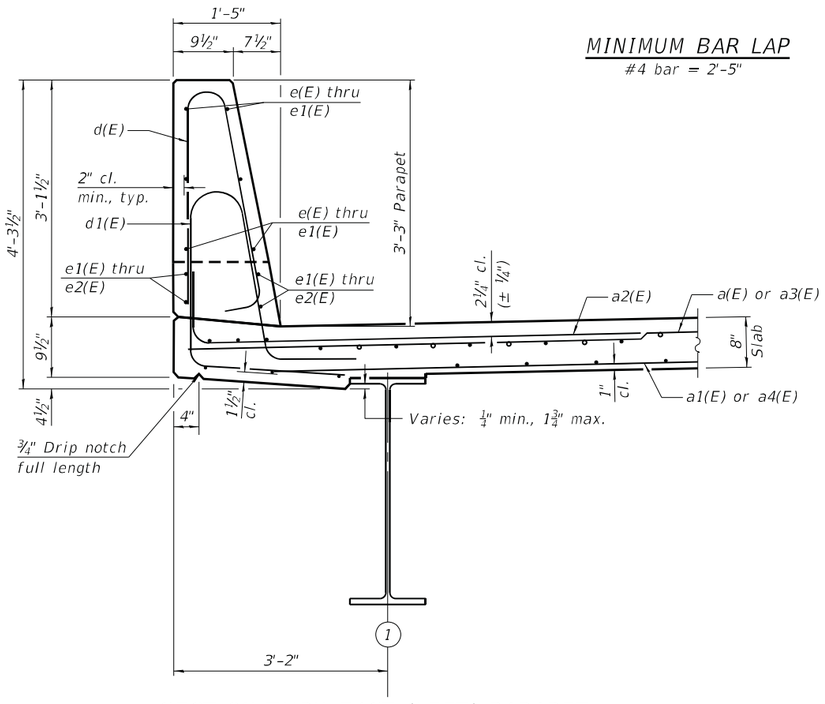

MINIMUM BAR LAP

#4 bar = 2'-5"

SECTION THRU EAST (LEFT) PARAPET

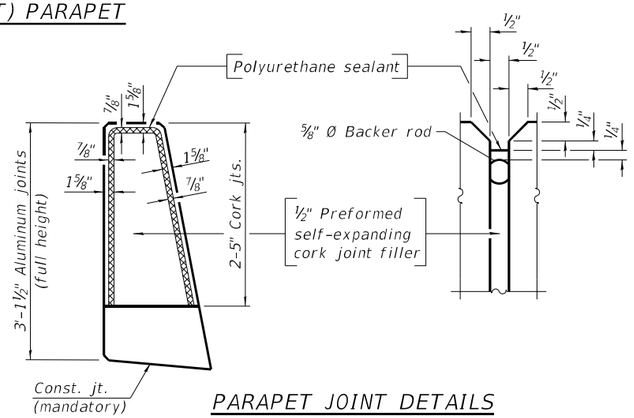

PARAPET JOINT DETAILS

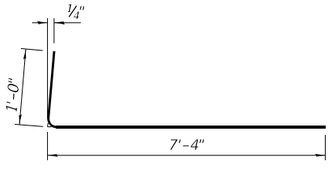

BAR a2(E)

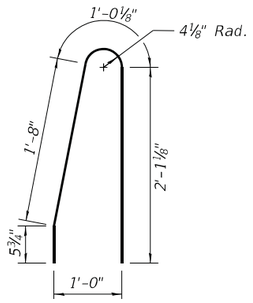

BAR d4(E)

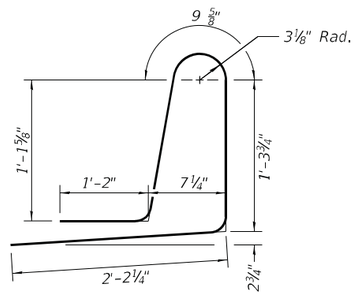

BAR d3(E)

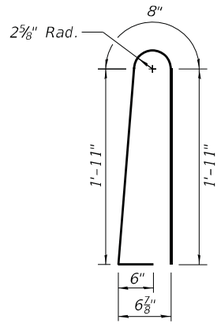

BAR d2(E)

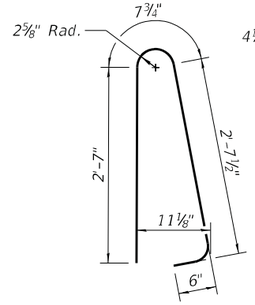

BAR d(E)

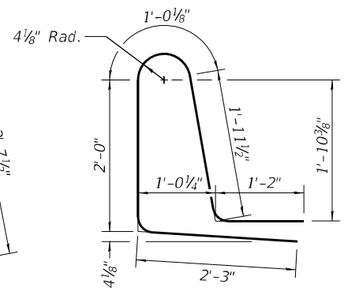

BAR d1(E)

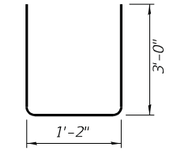

BAR u10(E)

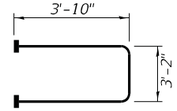

BAR s10(E)

(Headed)

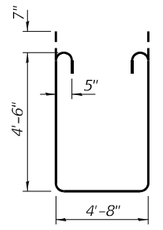

BAR s11(E)

SUPERSTRUCTURE BILL OF MATERIAL

Bar	No.	Size	Length	Shape
a(E)	509	#5	23'-2"	
a1(E)	313	#5	22'-2"	
a2(E)	1114	#6	8'-4"	
a3(E)	61	#5	25'-11"	
a4(E)	36	#5	25'-0"	
a5(E)	4	#5	39'-7"	
a6(E)	4	#5	34'-6"	
a7(E)	518	#5	20'-2"	
a8(E)	318	#5	19'-2"	
a9(E)	52	#5	22'-11"	
a10(E)	31	#5	22'-1"	
b(E)	517	#5	27'-5"	
b1(E)	123	#6	34'-1"	
b2(E)	410	#5	29'-8"	
d(E)	798	#5	6'-5"	
d1(E)	399	#5	8'-5"	
d2(E)	399	#5	5'-0"	
d3(E)	399	#5	6'-10"	
d4(E)	399	#5	5'-3"	
e(E)	216	#4	18'-6"	
e1(E)	60	#4	19'-8"	
e2(E)	96	#4	29'-11"	
m10(E)	4	#6	34'-8"	
m11(E)	16	#6	12'-6"	
m12(E)	24	#6	12'-6"	
m13(E)	8	#6	34'-8"	
m14(E)	20	#6	5'-1"	
m15(E)	4	#4	34'-8"	
m20(E)	4	#6	39'-9"	
m23(E)	8	#6	39'-9"	
m25(E)	4	#4	39'-9"	
s10(E)	82	#5	10'-10"	
s11(E)	82	#5	14'-10"	
u10(E)	82	#4	7'-2"	
Reinforcement Bars, Epoxy Coated		Lbs.	115720	
Concrete Superstructure		Cu. Yds.	489.8	

Bars indicated thus 1 x 2-#4 etc. indicates 1 line of bars with 2 lengths per line.

Notes:

The ⅛" aluminum sheet shall be ASTM B 209 alloy 3003-H14 and coated to minimize reaction with wet concrete. Cost included with Concrete Superstructure.

The polyurethane sealant shall be according to Article 1050.04 of the Std. Spec. and the color shall be gray.

Headed bars shall conform to ASTM A970 with threaded attachment; Class HA; and reinforcement bars conforming to ASTM A706. Cost included with Reinforcement Bars, Epoxy Coated.

MODEL: SUPDET-WESTPARPET
FILE NAME: G:\Users\1111111335-01-Wallnon-Road-over-I57-Superstructure\Survey D366997\Consultant_Data\Chamlin_2020\CAD_Sheets\0460153-66997-012-013-014-SUPERSTR_DETAILS.dgn
3/2/2021 2:49:49 PM

Chamlin & Associates

USER NAME =	DESIGNED - JKC	REVISED -
	CHECKED - AJO	REVISED -
PLOT SCALE =	DRAWN - LAG	REVISED -
PLOT DATE =	CHECKED - JKC	REVISED -

STATE OF ILLINOIS
DEPARTMENT OF TRANSPORTATION

SUPERSTRUCTURE DETAILS
STRUCTURE NO. 046-0153
SHEET 12 OF 54 SHEETS

F.A.I. RTE.	SECTION	COUNTY	TOTAL SHEETS	SHEET NO.
57	139HBR-6	KANKAKEE	202	101
		CONTRACT NO. 66997		
	ILLINOIS	FED. AID PROJECT		

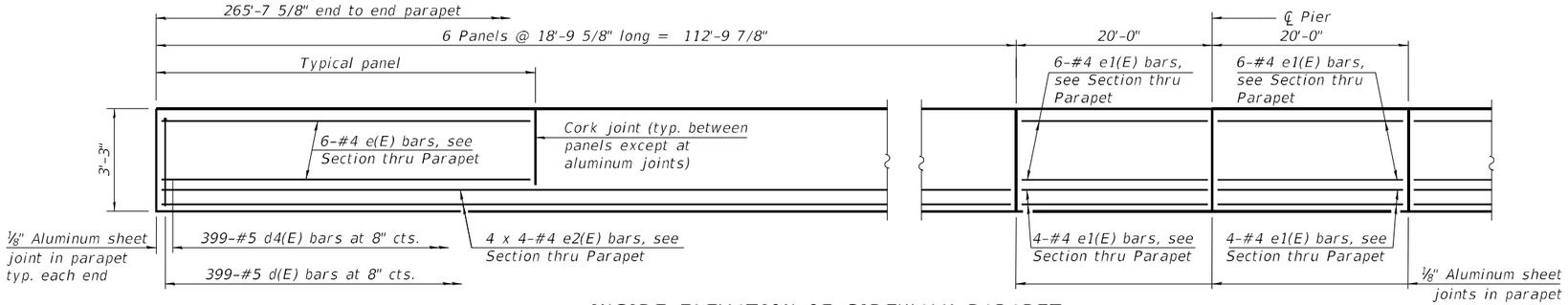

INSIDE ELEVATION OF SIDEWALK PARAPET BETWEEN ROADWAY AND PATH

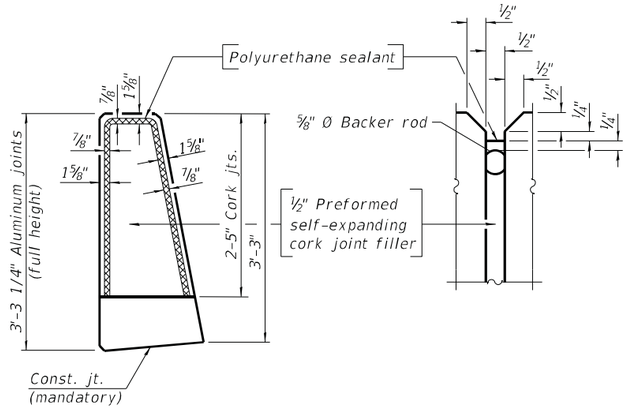

PARAPET JOINT DETAILS

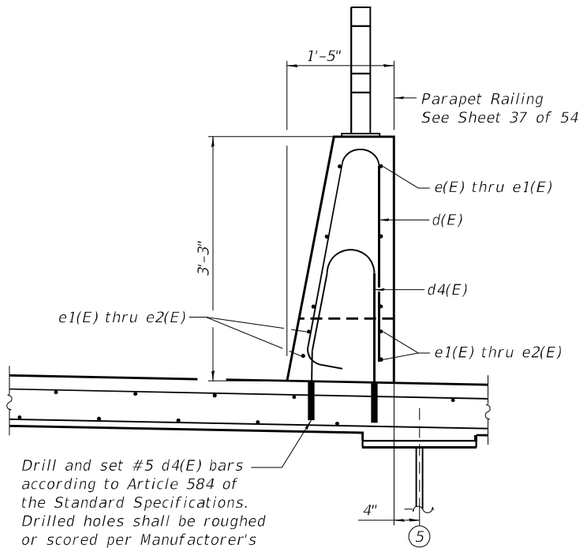

SECTION THRU SIDEWALK PARAPET

MINIMUM BAR LAP

#4 bar = 2'-5"

Notes:

The ⅛" aluminum sheet shall be ASTM B 209 alloy 3003-H14 and coated to minimize reaction with wet concrete. Cost included with Concrete Superstructure.

The polyurethane sealant shall be according to Article 1050.04 of the Std. Spec. and the color shall be gray.

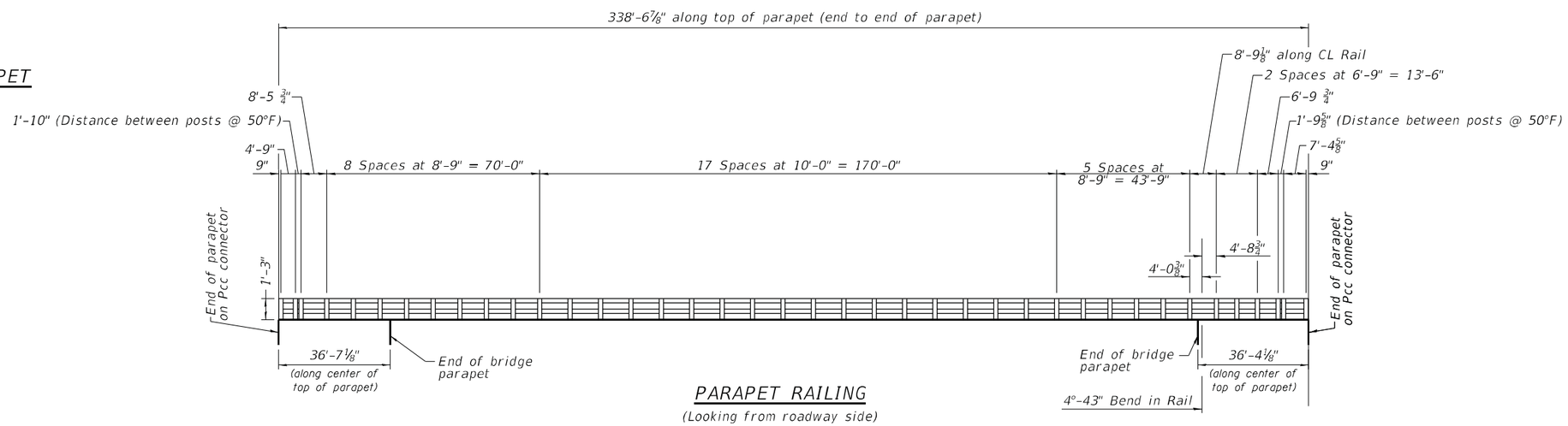

PARAPET RAILING

(Looking from roadway side)

USER NAME =	DESIGNED - JKC	REVISED -	STATE OF ILLINOIS DEPARTMENT OF TRANSPORTATION
	CHECKED - AJO	REVISED -	
PLOT SCALE =	DRAWN - LAG	REVISED -	
PLOT DATE =	CHECKED - JKC	REVISED -	

Chamlin & Associates

SUPERSTRUCTURE DETAILS
STRUCTURE NO. 046-0153
SHEET 13 OF 54 SHEETS

F.A.I. RTE.	SECTION	COUNTY	TOTAL SHEETS	SHEET NO.
57	139HBR-6	KANKAKEE	202	102
		CONTRACT NO. 66997		
	ILLINOIS FED. AID PROJECT			

MODEL: SUPDET-SWKPARPET
FILE NAME: G:\Users\11\11335-01-Waldron-Road-over-I57-Superstructure\Survey D366997\Consultant_Data\Chamlin_2020\CAD_Sheets\0460153-66997-012-013-014-SUPERSTR_DETAILS.dgn
3/2/2021 2:48:51 PM

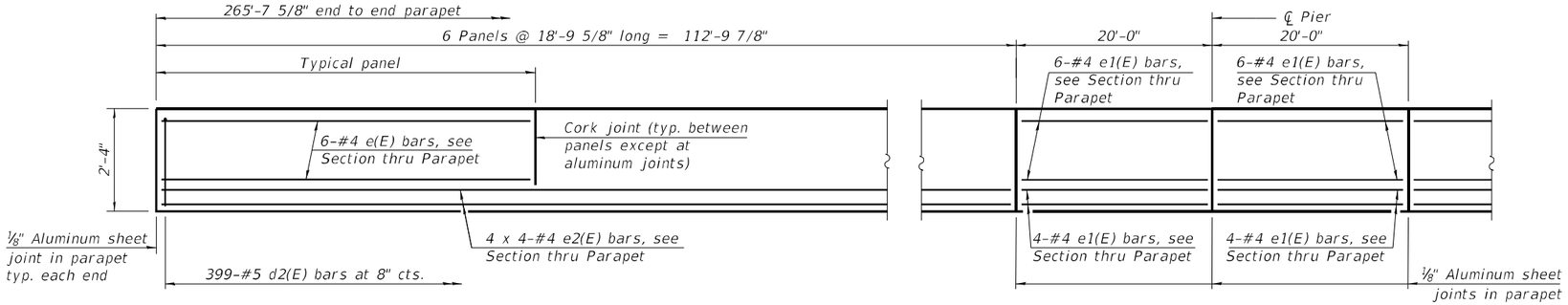

INSIDE ELEVATION OF WEST PARAPET

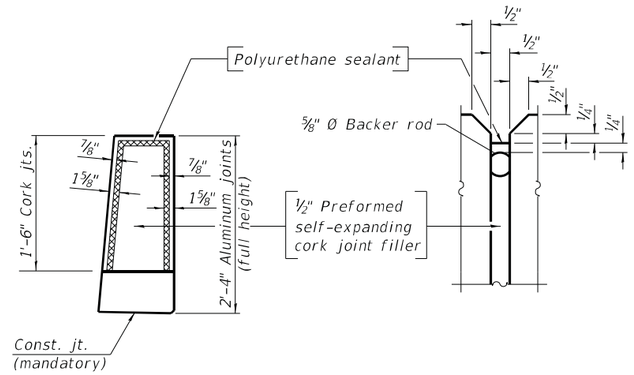

PARAPET JOINT DETAILS

MINIMUM BAR LAP

#4 bar = 2'-5"

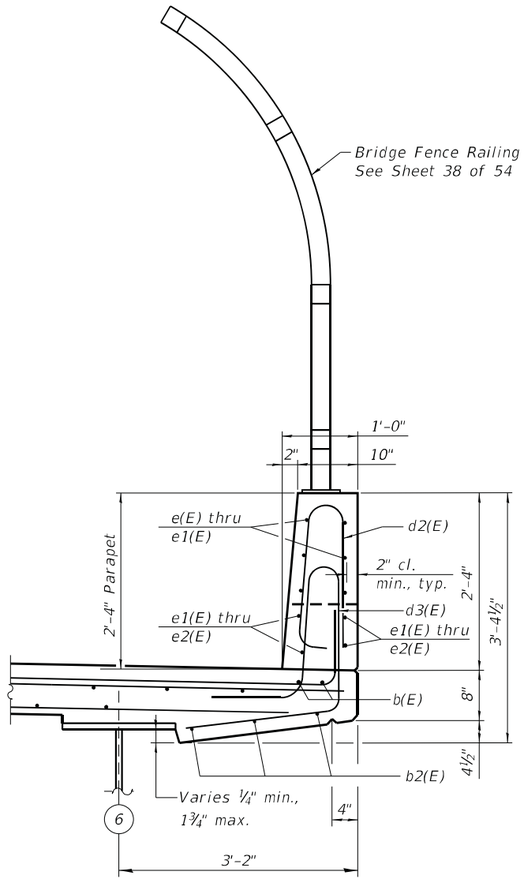

SECTION THRU WEST PARAPET

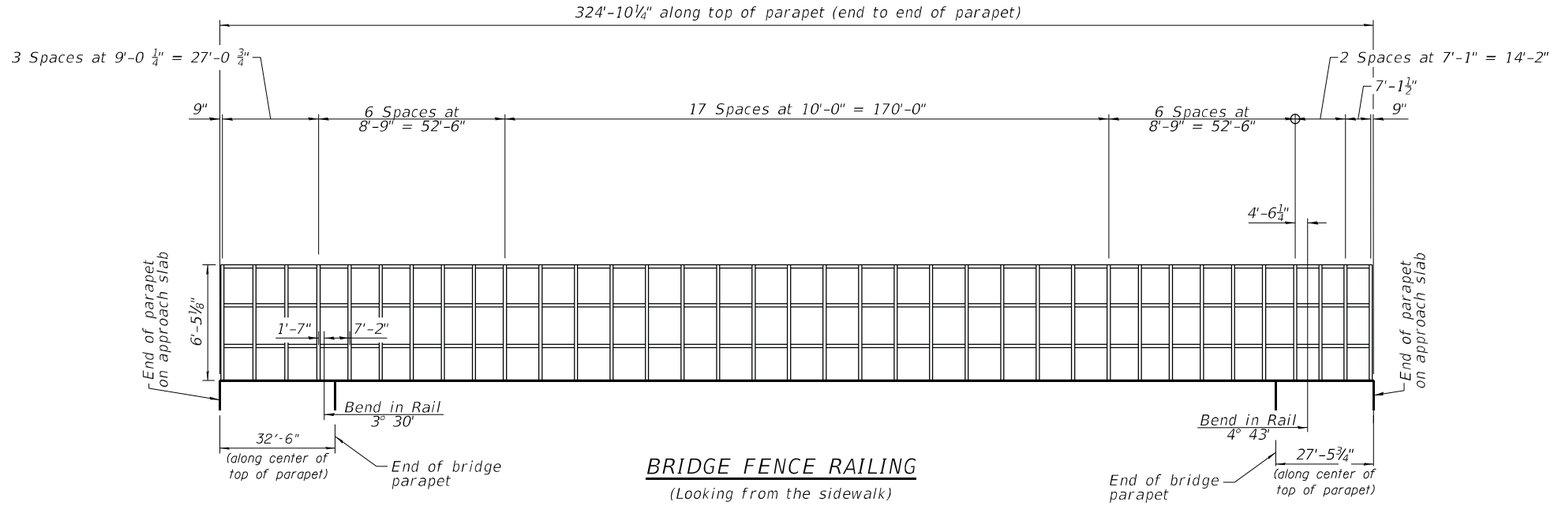

BRIDGE FENCE RAILING

(Looking from the sidewalk)

Notes:

The ⅛" aluminum sheet shall be ASTM B 209 alloy 3003-H14 and coated to minimize reaction with wet concrete. Cost included with Concrete Superstructure.

The polyurethane sealant shall be according to Article 1050.04 of the Std. Spec. and the color shall be gray.

MODEL: SUPDET-EASTPARPET
FILE NAME: G:\Users\11\11\11335-01-Waltron-Road-over-I57-Superstructure\Survey D3669997\Consultant_Data\Chamlin_2020\CAD_Sheets\046O153-66997-012-013-014-SUPERSTR_DETAILS.dgn
3/11/2021 3:32:57 PM

Chamlin & Associates

USER NAME =	DESIGNED - JKC	REVISED -
	CHECKED - AJO	REVISED -
PLOT SCALE =	DRAWN - LAG	REVISED -
PLOT DATE =	CHECKED - JKC	REVISED -

STATE OF ILLINOIS
DEPARTMENT OF TRANSPORTATION

SUPERSTRUCTURE DETAILS
STRUCTURE NO. 046-0153
SHEET 14 OF 54 SHEETS

F.A.I. RTE.	SECTION	COUNTY	TOTAL SHEETS	SHEET NO.
57	139HBR-6	KANKAKEE	202	103
			CONTRACT NO. 66997	
		ILLINOIS	FED. AID PROJECT	

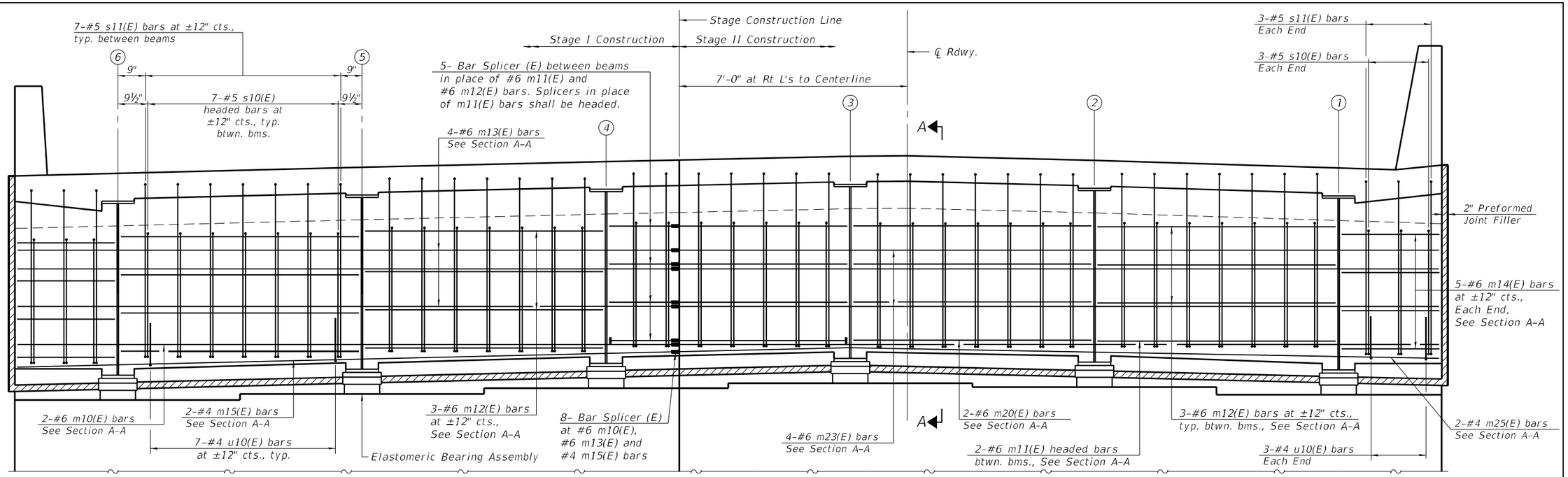

DIAPHRAGM AT NORTH ABUTMENT

(Looking North)

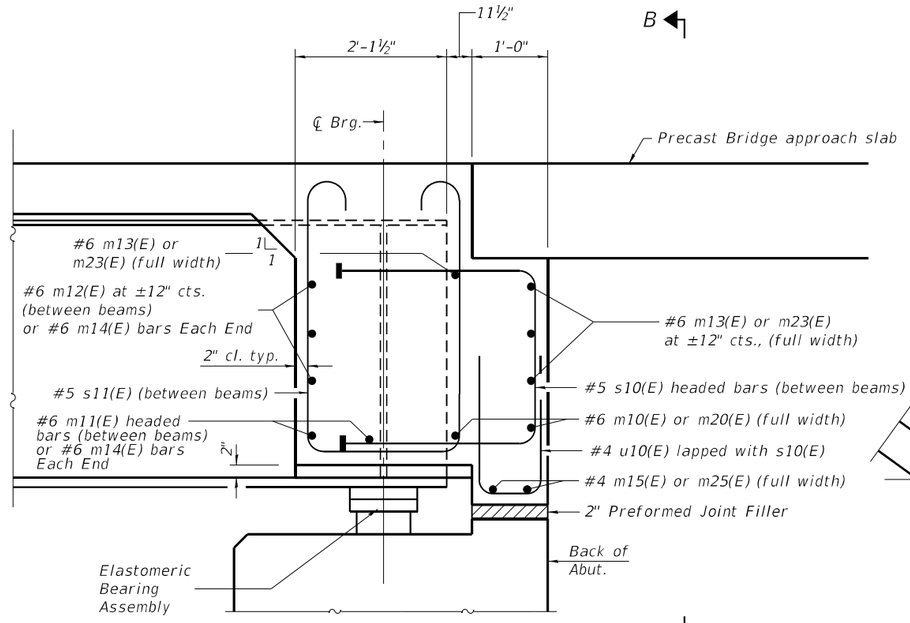

Headed bars shall conform to ASTM A970 with threaded attachment; Class HA; and reinforcement bars conforming to ASTM A706. Cost included with Reinforcement Bars, Epoxy Coated.

SECTION A-A

(at Rt. ℄'s)

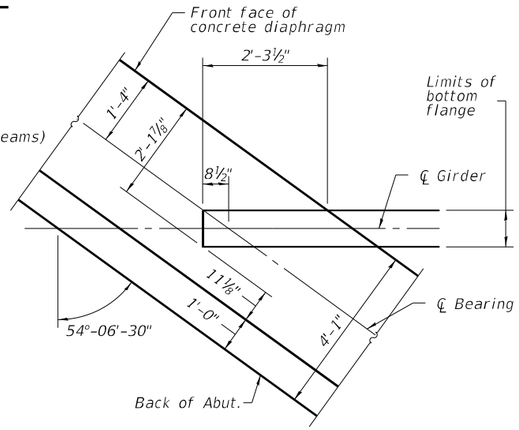

PLAN DETAIL

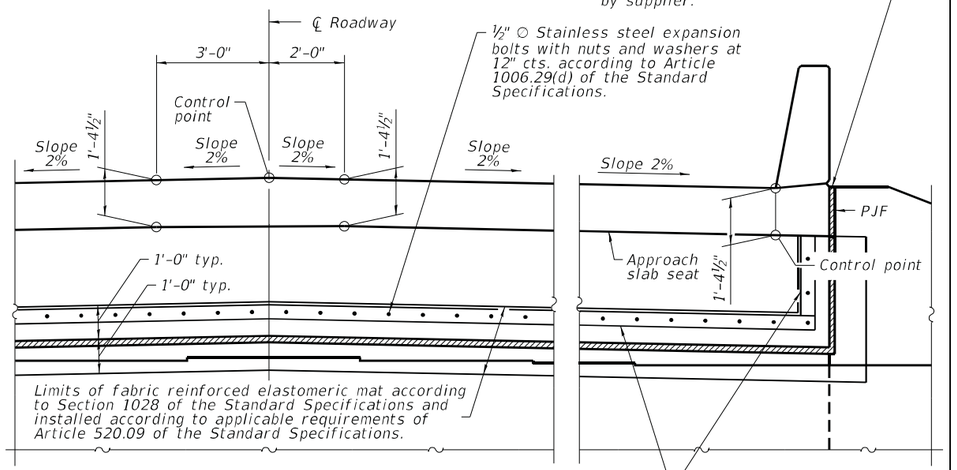

Note:
Cost of fabric reinforced elastomeric mat, galvanized plate, stainless steel expansion bolts with nuts and washers and installation are included in the cost of Concrete Superstructure.

VIEW B-B

2" PJF (per Article 1051.09 of the Standard Specifications) bonded to abutment cap and wingwall with suitable adhesive as recommended by supplier.

Min. lap
#4 bar 2'-5"
#6 bar 3'-7"

Notes:
See sheets 12 - 14 of 54 for superstructure details and Bill of Material.
The s10(E) and s11(E) bars shall be placed parallel to the beams. Spacing for these bars shall be at right angles to the beams.
The approach slab seat shall have a constant slope determined from the control points shown.
See sheet 49 of 54 for bar splicer details.

Chamlin & Associates

USER NAME =	DESIGNED - JKC	REVISED -	
	CHECKED - AJO	REVISED -	
PLOT SCALE =	DRAWN - LAG	REVISED -	
PLOT DATE =	CHECKED - JKC	REVISED -	

STATE OF ILLINOIS
DEPARTMENT OF TRANSPORTATION

DIAPHRAGM DETAILS
STRUCTURE NO. 046-0153
SHEET 15 OF 54 SHEETS

F.A.I. RTE.	SECTION	COUNTY	TOTAL SHEETS	SHEET NO.
57	139HBR-6	KANKAKEE	202	104
		CONTRACT NO. 66997		
	ILLINOIS FED. AID PROJECT			

MODEL: NORTH DIADETS
FILE NAME: G:\Users\11\111335-01-Waltron-Road-over-I57-Superstructure\Survey D3669997\Consultant_Data\Chamlin_2020\CAD_Sheets\046015-016-DIAPHRAGM_DETAILS.dgn
3/2/2021 2:50:47 PM

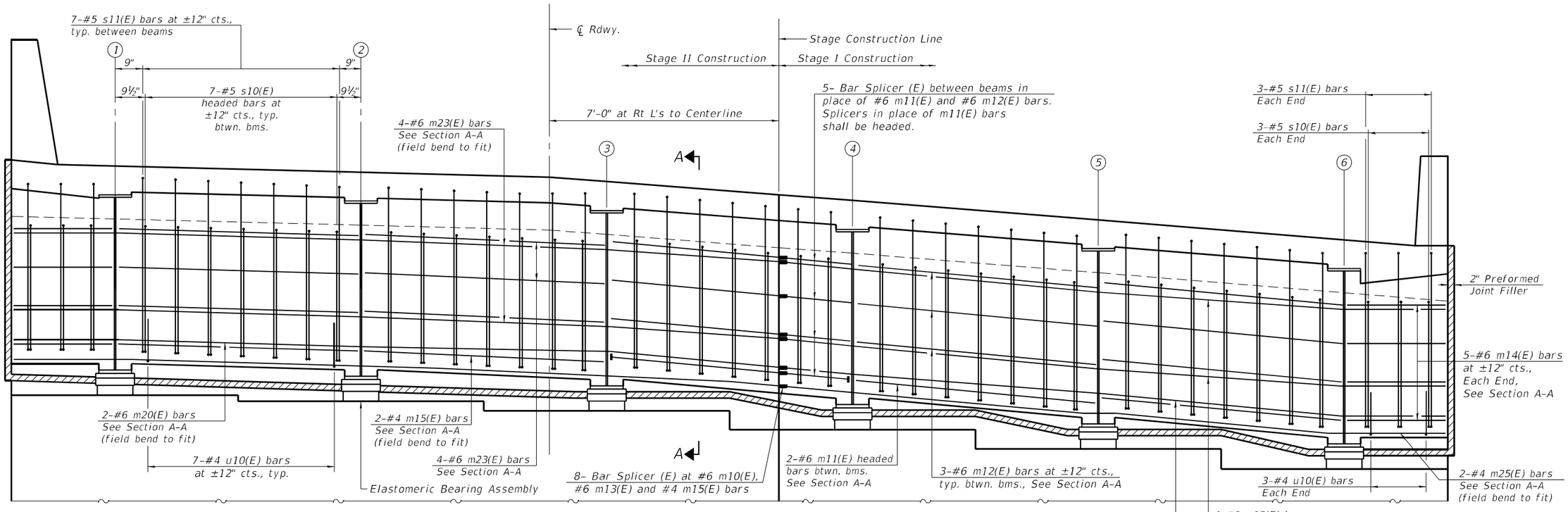

DIAPHRAGM AT SOUTH ABUTMENT

(Looking South)

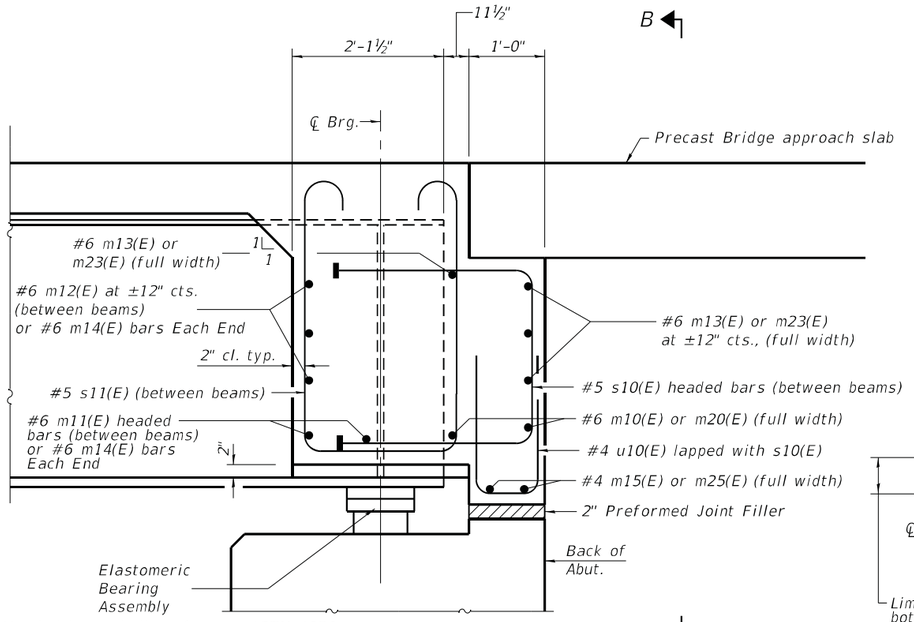

Headed bars shall conform to ASTM A970 with threaded attachment; Class HA; and reinforcement bars conforming to ASTM A706. Cost included with Reinforcement Bars, Epoxy Coated.

SECTION A-A

(at Rt. L's)

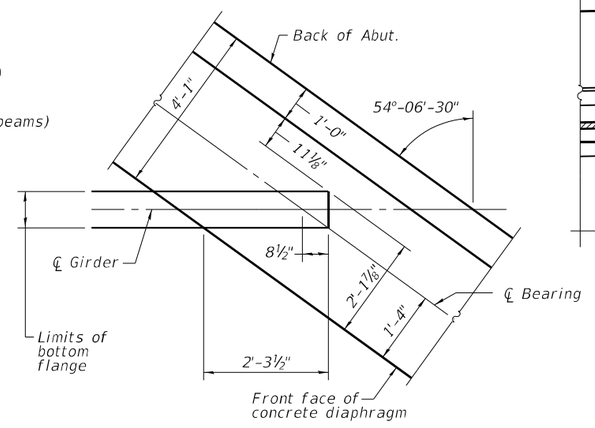

PLAN DETAIL

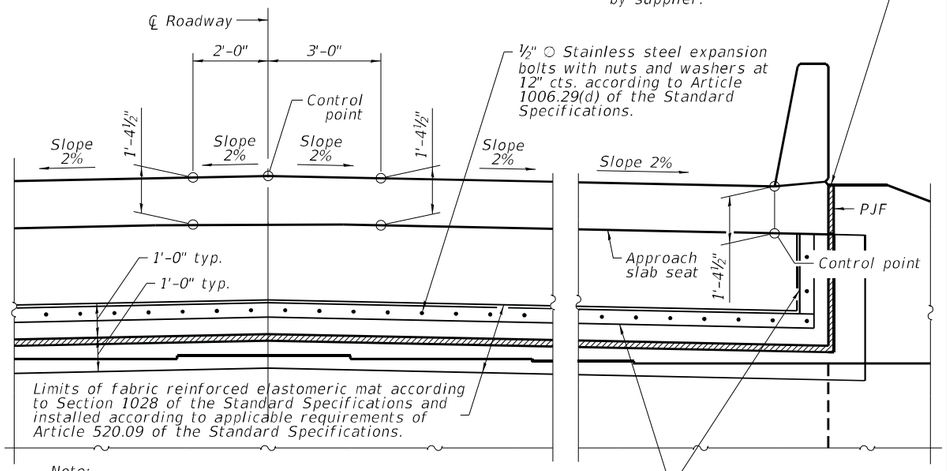

Note:
Cost of fabric reinforced elastomeric mat, galvanized plate, stainless steel expansion bolts with nuts and washers and installation are included in the cost of Concrete Superstructure.

VIEW B-B

Notes:

See sheets 12 - 14 of 54 for superstructure details and Bill of Material.

The s10(E) and s11(E) bars shall be placed parallel to the beams. Spacing for these bars shall be at right angles to the beams.

The approach slab seat shall have a constant slope determined from the control points shown.

See sheet 49 of 54 for bar splicer details.

Chamlin & Associates

USER NAME =	DESIGNED - JKC	REVISED -	
	CHECKED - AJO	REVISED -	
PLOT SCALE =	DRAWN - LAG	REVISED -	
PLOT DATE =	CHECKED - JKC	REVISED -	

STATE OF ILLINOIS
DEPARTMENT OF TRANSPORTATION

DIAPHRAGM DETAILS
STRUCTURE NO. 046-0153
SHEET 16 OF 54 SHEETS

F.A.I. RTE.	SECTION	COUNTY	TOTAL SHEETS	SHEET NO.
57	139HBR-6	KANKAKEE	202	105
		CONTRACT NO. 66997		
	ILLINOIS FED. AID PROJECT			

MODEL: SOUTH DIADETS
FILE NAME: G:\Users\11\111335-01-Waltron-Road-over-I57-Superstructure\Survey D3669997\Consultant_Data\Chamlin_2020\CAD_Sheets\046015-016-DIAPHRAGM_DETAILS.dgn
3/2/2021 2:51:15 PM

Sta. 17+72.64
16.97' Lt.

1-#4 b10(E) bar, cut to fit

2-#5 b12(E) bars top and bottom of slab, field bend to fit

Fan 2-#4 t10(E) Top and bottom of Approach Footing, See Sec. A-A, cut to fit

Sta. 17+90.44
16.91' Lt.

1-#4 b13(E) bar in curb. Bend to fit taper.

23-#5 d11(E) bars at 8" cts. typ.

Sta. 17+99.34
16.42' Lt.

Sta. 18+05.36
16.42' Lt.

1'-5"

6"

A

F

Min. lap
#5 bar 3'-6"
#4 bar 2'-5"

Cut back leg of d11(E) bar to fit

8-#5 a12(E) bars at 12" cts., typ. Lap with each a20(E) bar

20-#5 w20(E) bars at 6" cts. Top and bottom of Approach Footing. See Sec A-A

8-#5 a20(E) bars at 12" cts. Lap with each a10(E) bar

8-#5 a10(E) bars at 12" cts.

54°06'30" Skew

Approach Footing

10'-0"

7'-0"

3'-0"

10-#4 a21(E) bars at 12" cts. tilt as necessary to fit curb. Lap with each a11(E) bars

G

B

3'-0"

℄ Roadway

End of Deck

2'-0"

H

Back of Abut.

30'-0" end to end approach

7'-0"

C

A

A

See Note A

I

Bar Splicer (E) (typ.)

Stage Construction Line

D

20-#5 w10(E) bars at 6" cts. Top and bottom of Approach Footing. See Sec A-A Lap with each w20(E) bar

43-#4 b10(E) bars at 12" cts. (20 Stage I / 23 Stage II)

Stage II Construction

Stage I Construction

43'-10"

Top and bottom of Approach Footing, See Sec. A-A

44-#4 t10(E) bars at 12" cts.

(21 Stage I / 23 Stage II)

See Note B

8-#5 a10(E) bars at 12" cts. Lap with each a30(E) bar

Sta. 18+46.81
15.00' Rt.

Sta. 18+19.88
17.22' Rt.

10-#4 a11(E) bars at 12" cts.

20-#5 w10(E) bars at 6" cts. Top and bottom of Approach Footing. See Sec A-A Lap with each w30(E) bar

1'-5"

Sta. 18+46.99
16.41' Rt.

8-#5 a30(E) bars at 12" cts.

18-#5 a12(E) bars at 12" cts., typ. Lap with each a30(E) bar

Detail B

10-#5 a40(E) bars at 12" cts.

Sta. 18+63.97
27.42' Rt.

10-#4 a11(E) bars at 12" cts. Lap with each a40(E) bar

20-#5 w30(E) bars at 6" cts. Top and bottom of Approach Footing. See Sec A-A

2-#4 t10(E) Top and bottom of Approach Footing, See Sec. A-A, cut to fit

J

Sta. 18+53.41
27.42' Rt.

1'-0"

E

Fan 2-#4 b10(E) bar, cut to fit

2-#5 b22(E) bars top and bottom of slab, field bend to fit

Bend d21(E) bar to fit

Sta. 18+35.96
28.86' Rt.

41-#5 d21(E) bars at 8" cts. typ.

See Hwy. Std. 420401 for pavement connector

PLAN

N

Parapet on PCC Connector

Parapet on Approach Slab

Preformed Joint Strip Seal
See sheets 35 & 36 of 54 for details.

Detail B

NORTH APPROACH SLAB TOP AND BOTTOM ELEVATIONS FOR APPROACH FOOTINGS

Location	Station	Offset	TOP	BOTTOM
A	17+67.10	-17.27	657.22	656.39
B	17+86.82	-3.00	657.60	656.77
C	17+93.73	2.00	657.66	656.83
D	18+00.64	7.00	657.59	656.76
E	18+31.37	29.23	657.27	656.44
F	17+85.56	-16.26	657.33	656.50
G	18+03.88	-3.00	657.69	656.86
H	18+10.79	2.00	657.74	656.91
I	18+17.70	7.00	657.67	656.84
J	18+46.68	27.97	657.31	656.48

* Fabric bearing pads at the expansion end shall be recessed ¼" into the approach footing and bonded. Adjusting shims, when required, shall be bonded to the top of the fabric bearing pads.

See sheet 49 of 54 for bar splicer details.

Note A- 10 Bar Splicers (E) for #4 a11(E) bars and 8 Bar Splicers (E) for #5 a10(E) bars

Note B- 20 Bar Splicers (E) top & bottom of footing for #5 w10(E) bars

MODEL: 017-NORTHPLAN
FILE NAME: G:\Users\11111111335-01-Waltron-Road-over-I57-Superstructure\Survey D366997\Consultant_Data\Chamlin_2020\CAD_Sheets\046015 3-66997-017-024_026-033-PCASTAPPSLAB.dgn
3/2/2021 2:53:30 PM

Chamlin & Associates

USER NAME =	DESIGNED - JKC	REVISED -	
	CHECKED - AJO	REVISED -	
PLOT SCALE =	DRAWN - LAG	REVISED -	
PLOT DATE =	CHECKED - JKC	REVISED -	

STATE OF ILLINOIS
DEPARTMENT OF TRANSPORTATION

NORTH PRECAST BRIDGE APPROACH SLAB
STRUCTURE NO. 046-0153

SHEET 17 OF 54 SHEETS

F.A.I. RTE.	SECTION	COUNTY	TOTAL SHEETS	SHEET NO.
57	139HBR-6	KANKAKEE	202	106
		CONTRACT NO. 66997		
	ILLINOIS	FED. AID PROJECT		

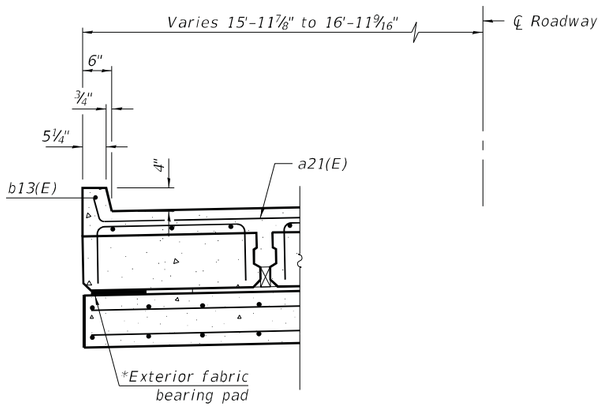

NORTHEAST CURB DETAIL
(Looking South)

Note A
Drill and set #5 d9(E) bars according to Article 584 of the Standard Specifications. Drilled holes shall be roughed or scored per Manufactorer's recommendations. Maximum depth of hole shall not exceed 6" Contractor shall take all necessary precautions to prevent drilled hole interference with deck reinforcement. Locate longitudinal bars to miss drilled locations. Locate drilled holes to miss transverse bars in deck.

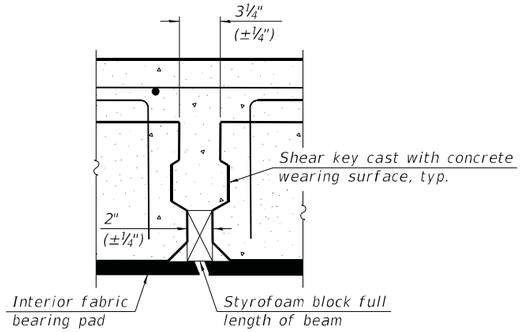

DETAIL 'A'

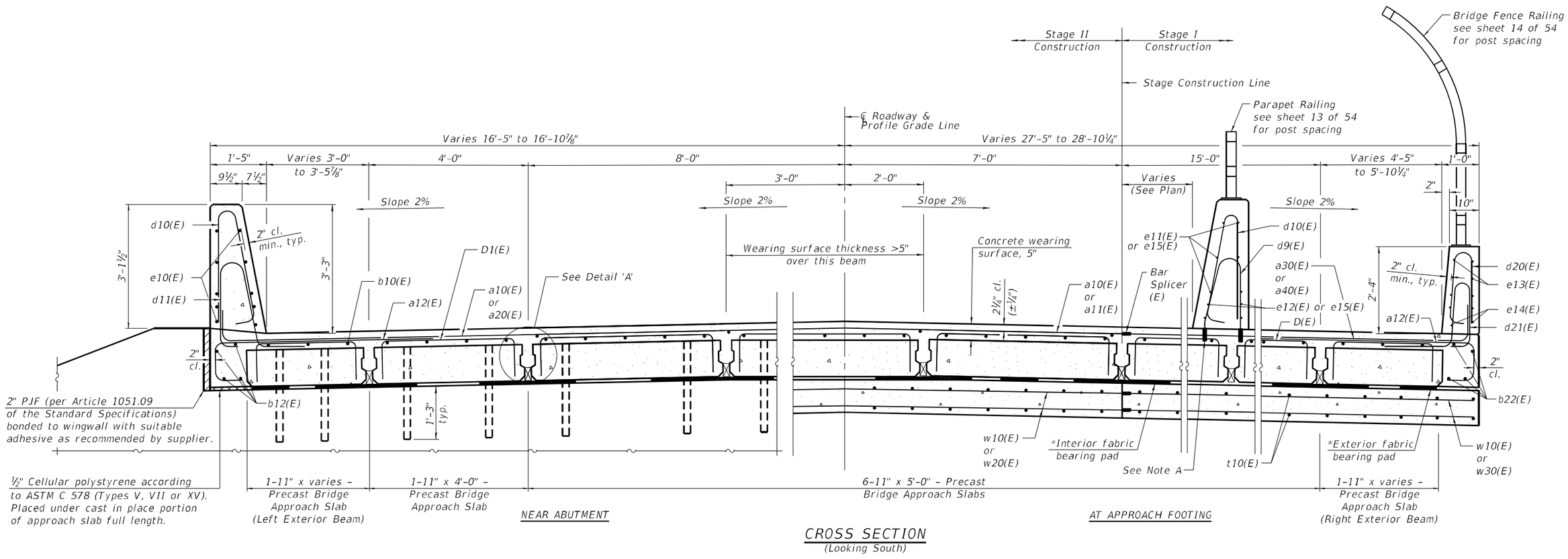

CROSS SECTION
(Looking South)

MODEL: 018-NORTH XS
FILE NAME: G:\Users\1111111335-01-Walbron-Road-over-I57-Superstructure\Survey D3669997\Consultant_Data\Chamlin_2020\CAD_Sheets\0460153-66997-017-024_026-033-PCASTAPPSLAB.dgn
3/2/2021 2:52:47 PM

Chamlin & Associates

USER NAME =	DESIGNED - JKC	REVISED -
	CHECKED - AJO	REVISED -
PLOT SCALE =	DRAWN - LAG	REVISED -
PLOT DATE =	CHECKED - JKC	REVISED -

STATE OF ILLINOIS
DEPARTMENT OF TRANSPORTATION

NORTH PRECAST BRIDGE APPROACH SLAB
STRUCTURE NO. 046-0153
SHEET 18 OF 54 SHEETS

F.A.I. RTE.	SECTION	COUNTY	TOTAL SHEETS	SHEET NO.
57	139HBR-6	KANKAKEE	202	107
		CONTRACT NO. 66997		
	ILLINOIS	FED. AID PROJECT		

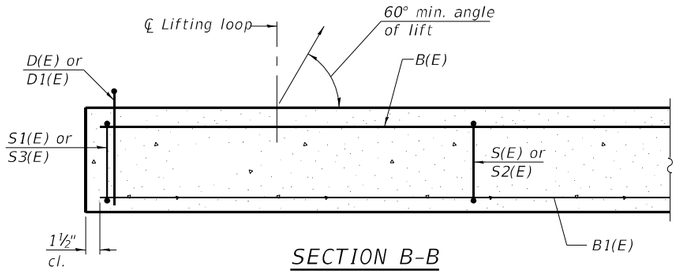

SECTION B-B

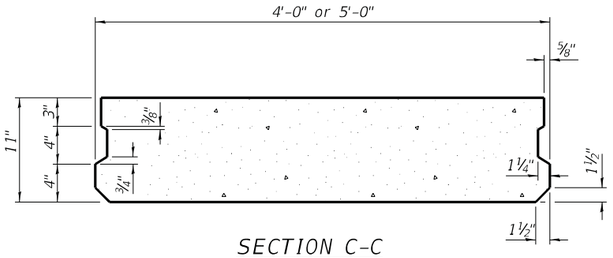

SECTION C-C
(Showing dimensions)

Notes:

The precast bridge approach slab shall be according to Section 504 of the Standard Specifications and shall be paid for at the contract unit price per square foot for Precast Bridge Approach Slab.

Cast-in-place substitution of Precast Bridge Approach Slab is not allowed.

The top surface of precast bridge approach slabs shall be finished similar to precast prestressed deck beams with concrete wearing surface as specified in the IDOT "Manual for Fabrication of Precast Prestressed Concrete Products."

Two ⅛" fabric adjusting shims of the dimensions of the exterior bearing pad shall be provided for each bearing pad location. Cost included with Precast Bridge Approach Slab.

A minimum 2 ½" Ø lifting pins shall be used to engage the lifting loops during handling.

Compressive strength of precast concrete, f'c shall be 6,000 psi.

Compressive strength of precast concrete during initial lifting, f'ci shall be 5,000 psi.

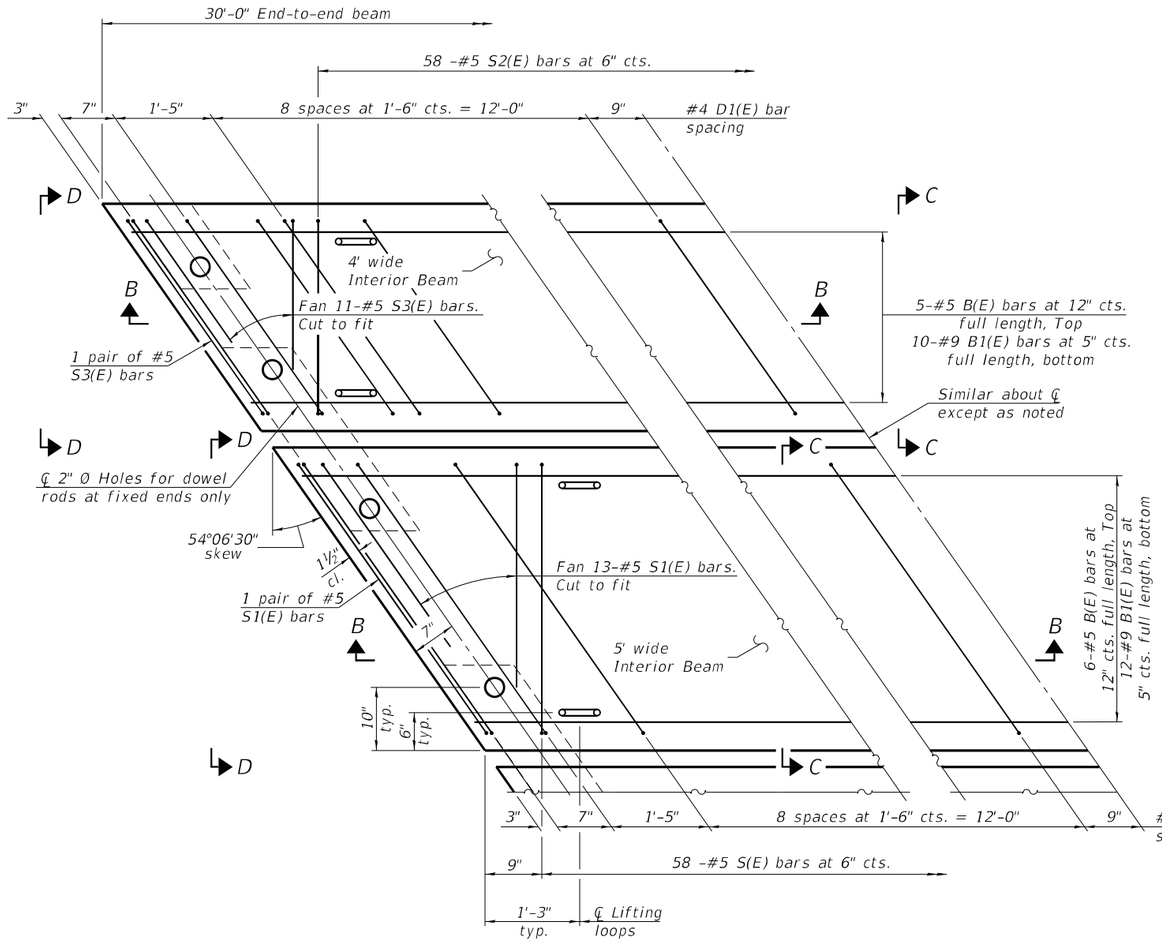

PLAN VIEW
(showing precast bridge approach beams)
(Spacing of D(E) and D1(E) bars may be adjusted up to 3" to miss the dowel rod holes and the lifting loops at the beam ends)

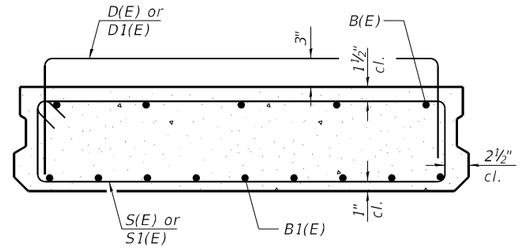

SECTION C-C
(Showing reinforcement)

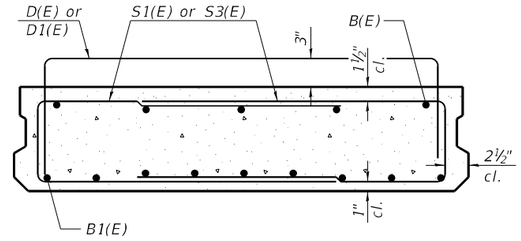

VIEW D-D
(Showing reinforcement)

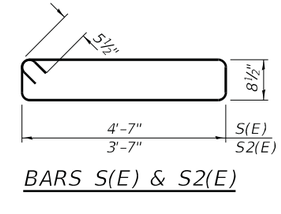

BARS S(E) & S2(E)

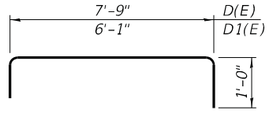

BARS D(E) & D1(E)

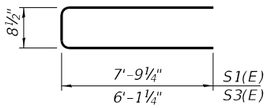

BARS S1(E) & S3(E)

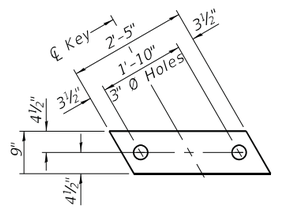

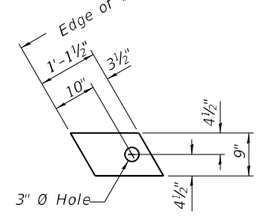

FABRIC BEARING PAD

Notes:

Bearing pads at fixed end shall be ½" thick and bearing pads at expansion end shall be ¾" thick.

Omit holes for fabric bearing pads at approach slab footing end of beams.

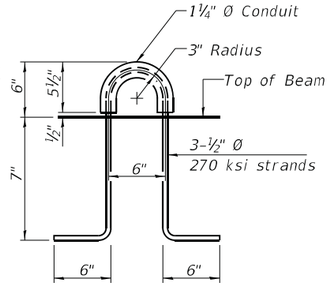

LIFTING LOOP DETAIL
(An alternate lifting loop with a proof load of 25,000 lbs. and utilized according to the manufacturer's recommendations may be used)

BAR LIST
EACH 5' WIDE INTERIOR BEAM
(For information only)

Bar	No.	Size	Length	Shape
B(E)	6	#5	29'-8"	—
B1(E)	12	#9	29'-8"	—
D(E)	22	#4	9'-9"	⌐
S(E)	58	#5	11'-6"	⌐
S1(E)	30	#5	16'-3"	⌐

BAR LIST
EACH 4' WIDE INTERIOR BEAM
(For information only)

Bar	No.	Size	Length	Shape
B(E)	5	#5	29'-8"	—
B1(E)	10	#9	29'-8"	—
D1(E)	32	#4	8'-1"	⌐
S2(E)	58	#5	9'-6"	⌐
S3(E)	26	#5	12'-3"	⌐

MODEL: 019-NORTH BEAMDET 4ft 5ft
FILE NAME: G:\Users\11\11335-01-Waldron-Road-over-I57-SuperstructureSurvey D366997\ConsultantData\Chamlin_2020\CAD_Sheets\0460153-66997-017-024_026-033-PCASTAPPSLAB.dgn
3/2/2021 2:55:44 PM

Chamlin & Associates

USER NAME =	DESIGNED - JKC	REVISED -	
	CHECKED - AJO	REVISED -	
PLOT SCALE =	DRAWN - LAG	REVISED -	
PLOT DATE =	CHECKED - JKC	REVISED -	

STATE OF ILLINOIS
DEPARTMENT OF TRANSPORTATION

NORTH PRECAST BRIDGE APPROACH SLABS
STRUCTURE NO. 046-0153
SHEET 19 OF 54 SHEETS

F.A.I. RTE.	SECTION	COUNTY	TOTAL SHEETS	SHEET NO.
57	139HBR-6	KANKAKEE	202	108
		CONTRACT NO. 66997		
	ILLINOIS	FED. AID PROJECT		

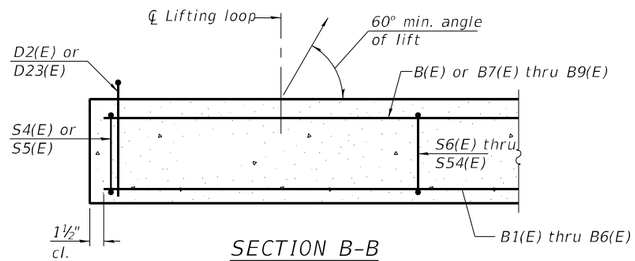

SECTION B-B

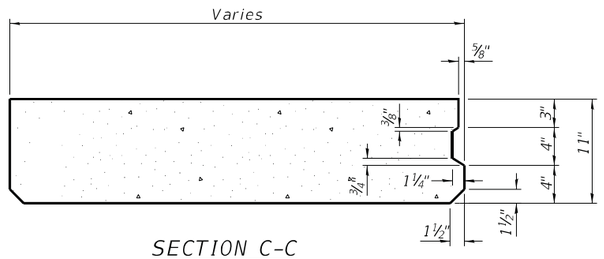

SECTION C-C
(Showing dimensions)

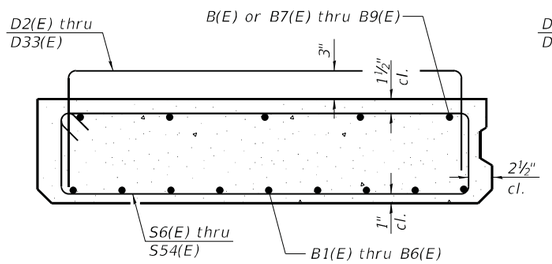

SECTION C-C
(Showing reinforcement)

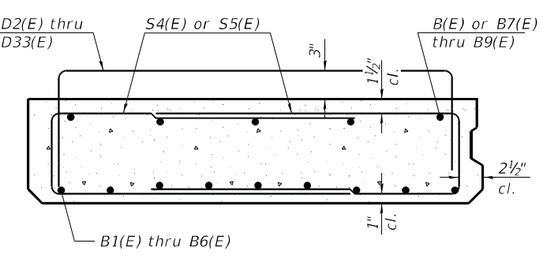

VIEW D-D
(Showing reinforcement)

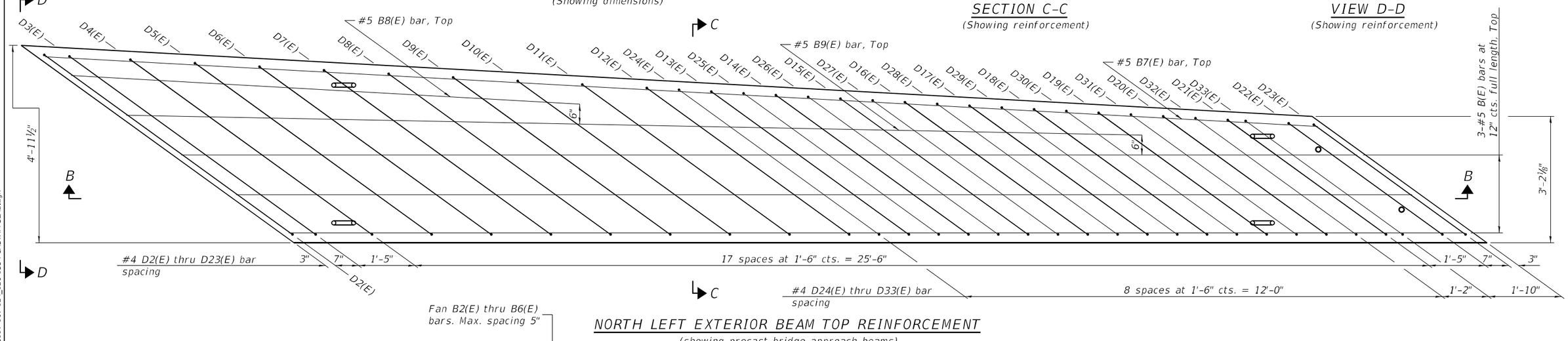

NORTH LEFT EXTERIOR BEAM TOP REINFORCEMENT
(showing precast bridge approach beams)
(Spacing of D4(E) thru D33(E) bars may be adjusted up to 3" to miss the dowel rod holes and the lifting loops at the beam ends)

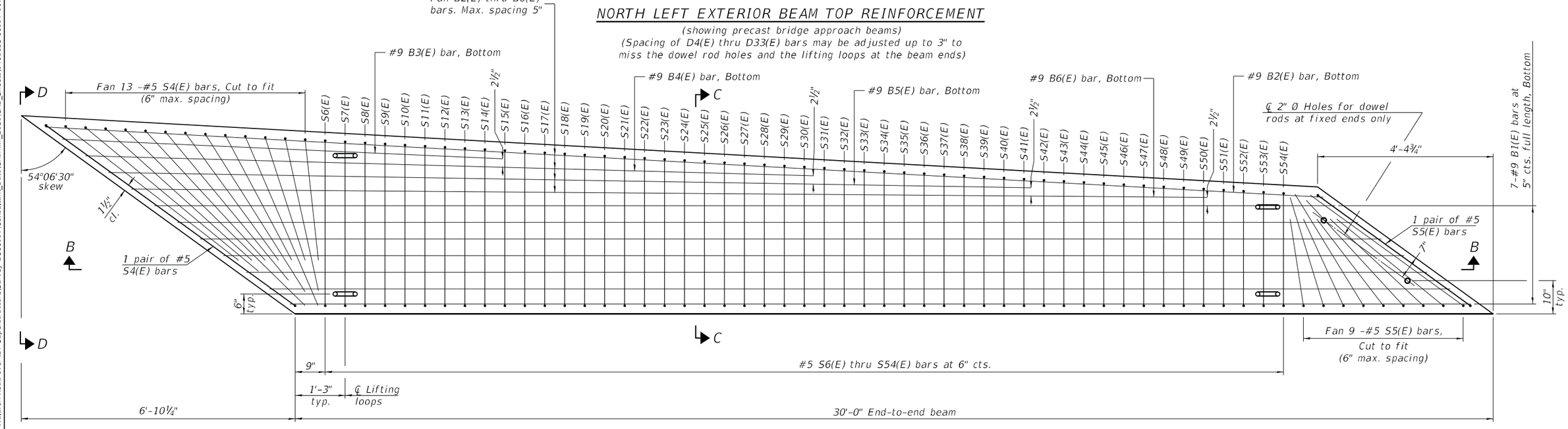

NORTH LEFT EXTERIOR BEAM BOTTOM REINFORCEMENT

USER NAME =	DESIGNED - JKC	REVISED -	STATE OF ILLINOIS DEPARTMENT OF TRANSPORTATION
	CHECKED - AJO	REVISED -	
PLOT SCALE =	DRAWN - LAG	REVISED -	
PLOT DATE =	CHECKED - JKC	REVISED -	

NORTH PRECAST BRIDGE APPROACH SLAB
STRUCTURE NO. 046-0153
SHEET 20 OF 54 SHEETS

F.A.I. RTE.	SECTION	COUNTY	TOTAL SHEETS	SHEET NO.
57	139HBR-6	KANKAKEE	202	109
		CONTRACT NO. 66997		
	ILLINOIS	FED. AID PROJECT		

MODEL: 020-BEAMDET EXTNL
FILE NAME: G:\Users\11\11335-01-Wallbon-Road-over-I57-Superstructure\Survey D366997\Consultant_Data\Chamlin_2020\CAD_Sheets\046O153-66997-017-024_026-033-PCASTAPPSLAB.dgn
3/2/2021 2:56:23 PM

7'-8" D2(E)
7'-7" D3(E)
7'-6" D4(E)
7'-4" D5(E)
7'-2" D6(E)
7'-0" D7(E)
6'-10" D8(E)
6'-8" D9(E)
6'-7" D10(E)
6'-5" D11(E)
6'-3" D12(E)
6'-1" D13(E)
5'-11" D14(E)
5'-10" D15(E)
5'-8" D16(E)
5'-6" D17(E)
5'-4" D18(E)
5'-2" D19(E)
5'-0" D20(E)
4'-11" D21(E)
4'-9" D22(E)
4'-8" D23(E)
6'-2" D24(E)
6'-0" D25(E)
5'-10" D26(E)
5'-9" D27(E)
5'-7" D28(E)
5'-5" D29(E)
5'-3" D30(E)
5'-1" D31(E)
4'-11" D32(E)
4'-10" D33(E)

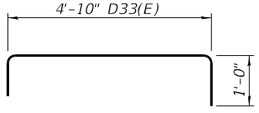

BARS D2(E) thru D33(E)

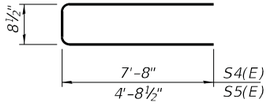

BARS S4(E) & S5(E)

4'-1½" S6(E)
4'-1" S7(E)
4'-0½" S8(E)
4'-0½" S9(E)
4'-0" S10(E)
3'-11½" S11(E)
3'-11½" S12(E)
3'-11" S13(E)
3'-10½" S14(E)
3'-10½" S15(E)
3'-10" S16(E)
3'-9½" S17(E)
3'-9½" S18(E)
3'-9" S19(E)
3'-8½" S20(E)
3'-8½" S21(E)
3'-8" S22(E)
3'-7½" S23(E)
3'-7½" S24(E)
3'-7" S25(E)
3'-7" S26(E)
3'-6½" S27(E)
3'-6" S28(E)
3'-6" S29(E)
3'-5½" S30(E)
3'-5" S31(E)
3'-5" S32(E)
3'-4½" S33(E)
3'-4" S34(E)
3'-4" S35(E)
3'-3½" S36(E)
3'-3" S37(E)
3'-3" S38(E)
3'-2½" S39(E)
3'-2" S40(E)
3'-2" S41(E)
3'-1½" S42(E)
3'-1" S43(E)
3'-1" S44(E)
3'-0½" S45(E)
3'-0" S46(E)
3'-0" S47(E)
2'-11½" S48(E)
2'-11" S49(E)
2'-11" S50(E)
2'-10½" S51(E)
2'-10" S52(E)
2'-10" S53(E)
2'-9½" S54(E)

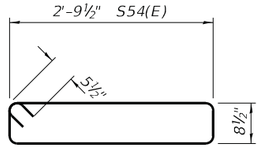

BARS S6(E) thru S54(E)

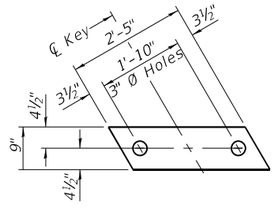

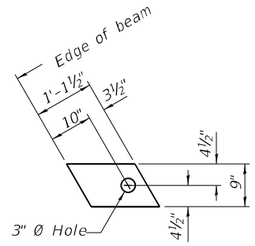

FABRIC BEARING PAD

Notes:
Bearing pads at fixed end shall be ½" thick and bearing pads at expansion end shall be ¾" thick.
Omit holes for fabric bearing pads at approach slab footing end of beams.

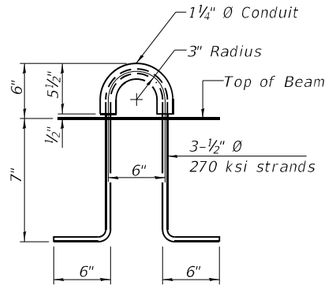

LIFTING LOOP DETAIL

(An alternate lifting loop with a proof load of 25,000 lbs. and utilized according to the manufacturer's recommendations may be used)

Notes:
The precast bridge approach slab shall be according to Section 504 of the Standard Specifications and shall be paid for at the contract unit price per square foot for Precast Bridge Approach Slab.
Cast-in-place substitution of Precast Bridge Approach Slab is not allowed.
The top surface of precast bridge approach slabs shall be finished similar to precast prestressed deck beams with concrete wearing surface as specified in the IDOT "Manual for Fabrication of Precast Prestressed Concrete Products."
Two ⅛" fabric adjusting shims of the dimensions of the exterior bearing pad shall be provided for each bearing pad location. Cost included with Precast Bridge Approach Slab.
A minimum 2 ½" Ø lifting pins shall be used to engage the lifting loops during handling.
Compressive strength of precast concrete, f'c shall be 6,000 psi.
Compressive strength of precast concrete during initial lifting, f'ci shall be 5,000 psi.

BAR LIST
NORTH LEFT EXTERIOR BEAM
(For information only)

Bar	No.	Size	Length	Shape
B(E)	3	#5	29'-8"	—
B1(E)	7	#9	29'-8"	—
B2(E)	1	#9	32'-0"	—
B3(E)	1	#9	11'-0"	—
B4(E)	1	#9	18'-2"	—
B5(E)	1	#9	23'-1"	—
B6(E)	1	#9	26'-11"	—
B7(E)	1	#5	32'-0"	—
B8(E)	1	#5	12'-9"	—
B9(E)	1	#5	25'-6"	—
D2(E)	1	#4	9'-8"	⌐ ¬
D3(E)	1	#4	9'-7"	⌐ ¬
D4(E)	1	#4	9'-6"	⌐ ¬
D5(E)	1	#4	9'-4"	⌐ ¬
D6(E)	1	#4	9'-2"	⌐ ¬
D7(E)	1	#4	9'-0"	⌐ ¬
D8(E)	1	#4	8'-10"	⌐ ¬
D9(E)	1	#4	8'-8"	⌐ ¬
D10(E)	1	#4	8'-7"	⌐ ¬
D11(E)	1	#4	8'-5"	⌐ ¬
D12(E)	1	#4	8'-3"	⌐ ¬
D13(E)	1	#4	8'-1"	⌐ ¬
D14(E)	1	#4	7'-11"	⌐ ¬
D15(E)	1	#4	7'-10"	⌐ ¬
D16(E)	1	#4	7'-8"	⌐ ¬
D17(E)	1	#4	7'-6"	⌐ ¬
D18(E)	1	#4	7'-4"	⌐ ¬
D19(E)	1	#4	7'-2"	⌐ ¬
D20(E)	1	#4	7'-0"	⌐ ¬
D21(E)	1	#4	6'-11"	⌐ ¬
D22(E)	1	#4	6'-9"	⌐ ¬
D23(E)	1	#4	6'-8"	⌐ ¬
D24(E)	1	#4	8'-2"	⌐ ¬
D25(E)	1	#4	8'-0"	⌐ ¬
D26(E)	1	#4	7'-10"	⌐ ¬
D27(E)	1	#4	7'-9"	⌐ ¬
D28(E)	1	#4	7'-7"	⌐ ¬
D29(E)	1	#4	7'-5"	⌐ ¬
D30(E)	1	#4	7'-3"	⌐ ¬
D31(E)	1	#4	7'-1"	⌐ ¬
D32(E)	1	#4	6'-11"	⌐ ¬
D33(E)	1	#4	6'-10"	⌐ ¬

BAR LIST
NORTH LEFT EXTERIOR BEAM
(For information only)

Bar	No.	Size	Length	Shape
S4(E)	15	#5	16'-1"	▭
S5(E)	11	#5	10'-2"	▭
S6(E)	1	#5	10'-7"	▭
S7(E)	1	#5	10'-6"	▭
S8(E)	1	#5	10'-5"	▭
S9(E)	1	#5	10'-5"	▭
S10(E)	1	#5	10'-4"	▭
S11(E)	1	#5	10'-3"	▭
S12(E)	1	#5	10'-3"	▭
S13(E)	1	#5	10'-2"	▭
S14(E)	1	#5	10'-1"	▭
S15(E)	1	#5	10'-1"	▭
S16(E)	1	#5	10'-0"	▭
S17(E)	1	#5	9'-11"	▭
S18(E)	1	#5	9'-11"	▭
S19(E)	1	#5	9'-10"	▭
S20(E)	1	#5	9'-9"	▭
S21(E)	1	#5	9'-9"	▭
S22(E)	1	#5	9'-8"	▭
S23(E)	1	#5	9'-7"	▭
S24(E)	1	#5	9'-7"	▭
S25(E)	1	#5	9'-6"	▭
S26(E)	1	#5	9'-6"	▭
S27(E)	1	#5	9'-5"	▭
S28(E)	1	#5	9'-4"	▭
S29(E)	1	#5	9'-4"	▭
S30(E)	1	#5	9'-3"	▭
S31(E)	1	#5	9'-2"	▭
S32(E)	1	#5	9'-2"	▭
S33(E)	1	#5	9'-1"	▭
S34(E)	1	#5	9'-0"	▭
S35(E)	1	#5	9'-0"	▭
S36(E)	1	#5	8'-11"	▭
S37(E)	1	#5	8'-10"	▭
S38(E)	1	#5	8'-10"	▭
S39(E)	1	#5	8'-9"	▭
S40(E)	1	#5	8'-8"	▭
S41(E)	1	#5	8'-8"	▭
S42(E)	1	#5	8'-7"	▭
S43(E)	1	#5	8'-6"	▭
S44(E)	1	#5	8'-6"	▭
S45(E)	1	#5	8'-5"	▭
S46(E)	1	#5	8'-4"	▭
S47(E)	1	#5	8'-4"	▭
S48(E)	1	#5	8'-3"	▭
S49(E)	1	#5	8'-2"	▭
S50(E)	1	#5	8'-2"	▭
S51(E)	1	#5	8'-1"	▭
S52(E)	1	#5	8'-0"	▭
S53(E)	1	#5	8'-0"	▭
S54(E)	1	#5	7'-11"	▭

MODEL: 021-BEAMDET EXTNL2
FILE NAME: G:\Users\11\111335-01-Waldron-Road-over-I57-Superstructure\Survey D366997\ConsultantData\Chamlin_2020\CAD_Sheets\0460153-66997-017-024_026-033-PCASTAPPSLAB.dgn
3/2/2021 2:57:34 PM

Chamlin & Associates

USER NAME =	DESIGNED - JKC	REVISED -
	CHECKED - AJO	REVISED -
PLOT SCALE =	DRAWN - LAG	REVISED -
PLOT DATE =	CHECKED - JKC	REVISED -

STATE OF ILLINOIS
DEPARTMENT OF TRANSPORTATION

NORTH PRECAST BRIDGE APPROACH SLAB
STRUCTURE NO. 046-0153
SHEET 21 OF 54 SHEETS

F.A.I. RTE.	SECTION	COUNTY	TOTAL SHEETS	SHEET NO.
57	139HBR-6	KANKAKEE	202	110
		CONTRACT NO. 66997		
	ILLINOIS	FED. AID PROJECT		

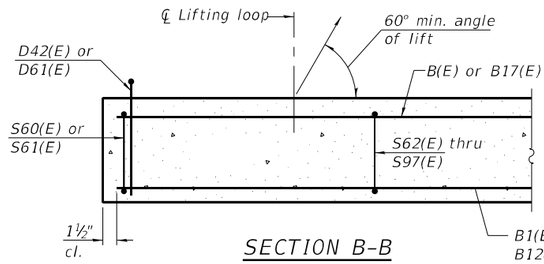

SECTION B-B

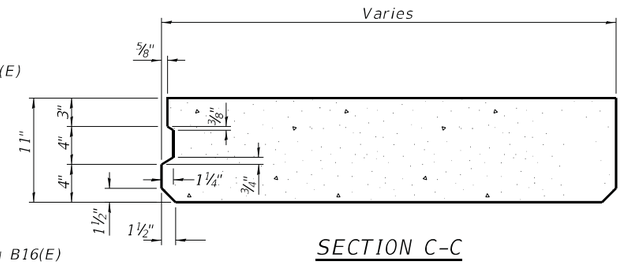

SECTION C-C
(Showing dimensions)

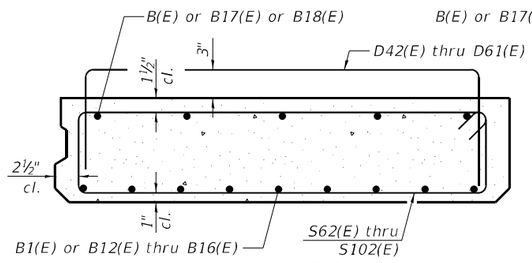

SECTION C-C
(Showing reinforcement)

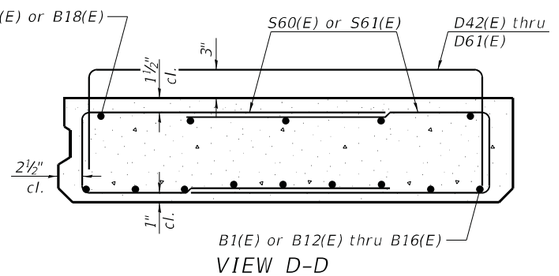

VIEW D-D
(Showing reinforcement)

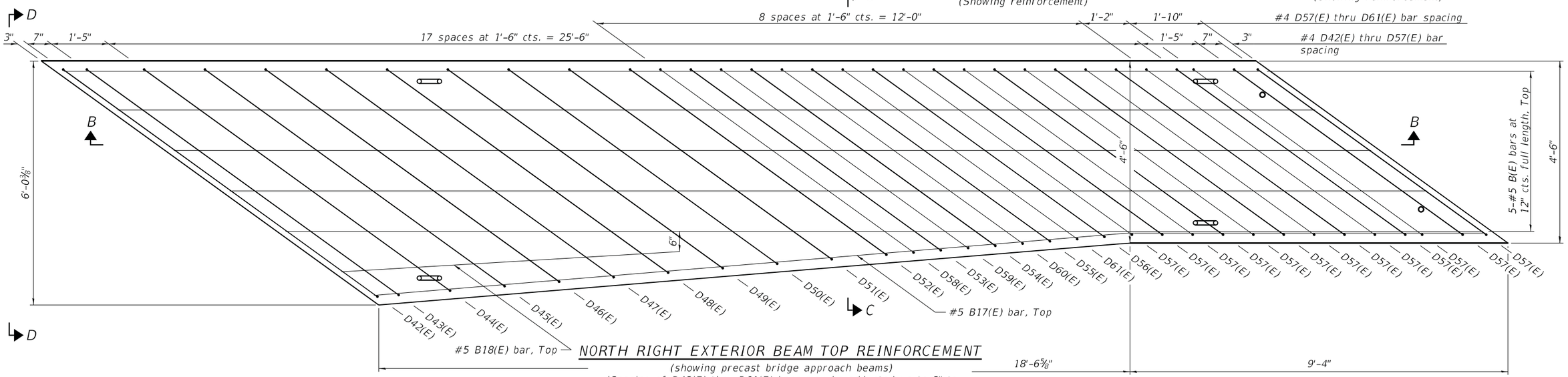

NORTH RIGHT EXTERIOR BEAM TOP REINFORCEMENT
(showing precast bridge approach beams)
(Spacing of D42(E) thru D61(E) bars may be adjusted up to 3" to miss the dowel rod holes and the lifting loops at the beam ends)

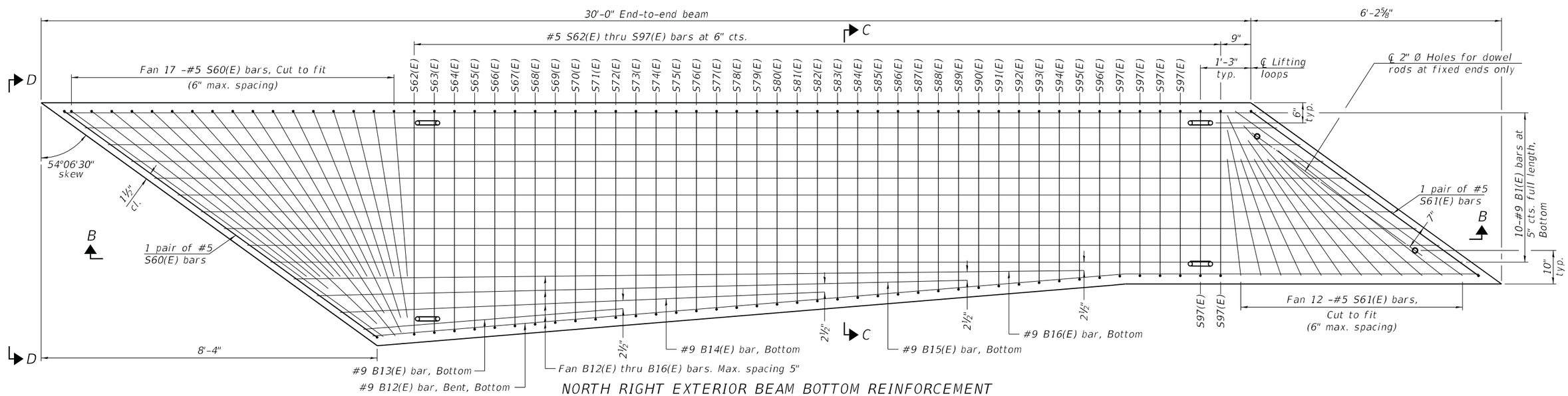

NORTH RIGHT EXTERIOR BEAM BOTTOM REINFORCEMENT

USER NAME =	DESIGNED - JKC	REVISED -	STATE OF ILLINOIS DEPARTMENT OF TRANSPORTATION
	CHECKED - AJO	REVISED -	
PLOT SCALE =	DRAWN - LAG	REVISED -	
PLOT DATE =	CHECKED - JKC	REVISED -	

NORTH PRECAST BRIDGE APPROACH SLAB
STRUCTURE NO. 046-0153
SHEET 22 OF 54 SHEETS

F.A.I. RTE.	SECTION	COUNTY	TOTAL SHEETS	SHEET NO.
57	139HBR-6	KANKAKEE	202	111
		CONTRACT NO. 66997		
	ILLINOIS FED. AID PROJECT			

Chamlin & Associates

MODEL: 022-BEAMDET EXTNR
FILE NAME: G:\Users\111\11335-01-Walton-Road-over-I57-Superstructure\Survey D366997\Consultant_Data\Chamlin_2020\CAD_Sheets\0460153-66997-017-024_026-033-PCASTAPPSLAB.dgn
3/2/2021 2:58:44 PM

9'-7" D42(E)
9'-6" D43(E)
9'-4" D44(E)
9'-1" D45(E)
8'-11" D46(E)
8'-9" D47(E)
8'-6" D48(E)
8'-4" D49(E)
8'-2" D50(E)
8'-0" D51(E)
7'-9" D52(E)
7'-7" D53(E)
7'-5" D54(E)
7'-2" D55(E)
7'-0" D56(E)
6'-11" D57(E)
7'-8" D58(E)
7'-6" D59(E)
7'-4" D60(E)
7'-1" D61(E)

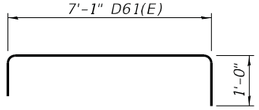

BARS D42(E) thru D61(E)

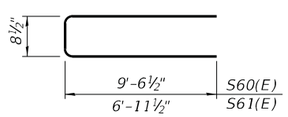

BARS S60(E) & S61(E)

5'-6½" S62(E)
5'-6" S63(E)
5'-5½" S64(E)
5'-5" S65(E)
5'-4½" S66(E)
5'-4" S67(E)
5'-3½" S68(E)
5'-3" S69(E)
5'-2½" S70(E)
5'-2" S71(E)
5'-1½" S72(E)
5'-1" S73(E)
5'-0½" S74(E)
5'-0" S75(E)
4'-11½" S76(E)
4'-11" S77(E)
4'-10½" S78(E)
4'-10" S79(E)
4'-9½" S80(E)
4'-9" S81(E)
4'-8½" S82(E)
4'-8" S83(E)
4'-7½" S84(E)
4'-7" S85(E)
4'-6½" S86(E)
4'-6" S87(E)
4'-5½" S88(E)
4'-5" S89(E)
4'-4½" S90(E)
4'-4" S91(E)
4'-3½" S92(E)
4'-3" S93(E)
4'-2½" S94(E)
4'-2" S95(E)
4'-1½" S96(E)
4'-1" S97(E)

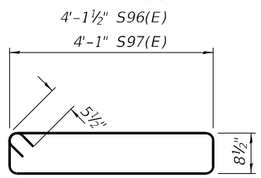

BARS S62(E) thru S97(E)

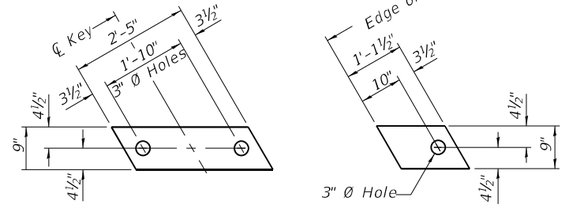

FABRIC BEARING PAD

Notes:
Bearing pads at fixed end shall be ½" thick and bearing pads at expansion end shall be ¾" thick.
Omit holes for fabric bearing pads at approach slab footing end of beams.

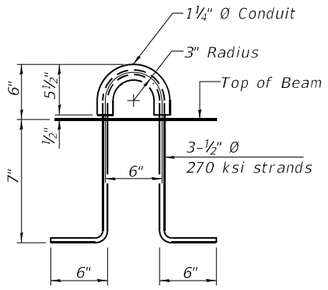

LIFTING LOOP DETAIL

(An alternate lifting loop with a proof load of 25,000 lbs. and utilized according to the manufacturer's recommendations may be used)

Notes:
The precast bridge approach slab shall be according to Section 504 of the Standard Specifications and shall be paid for at the contract unit price per square foot for Precast Bridge Approach Slab.
Cast-in-place substitution of Precast Bridge Approach Slab is not allowed.
The top surface of precast bridge approach slabs shall be finished similar to precast prestressed deck beams with concrete wearing surface as specified in the IDOT "Manual for Fabrication of Precast Prestressed Concrete Products."
Two ⅛" fabric adjusting shims of the dimensions of the exterior bearing pad shall be provided for each bearing pad location. Cost included with Precast Bridge Approach Slab.
A minimum 2 ½" Ø lifting pins shall be used to engage the lifting loops during handling.
Compressive strength of precast concrete, f'c shall be 6,000 psi.
Compressive strength of precast concrete during initial lifting, f'ci shall be 5,000 psi.

BAR LIST
NORTH RIGHT EXTERIOR BEAM
(For information only)

Bar	No.	Size	Length	Shape
B(E)	5	#5	29'-8"	—
B1(E)	10	#9	29'-8"	—
B12(E)	1	#9	27'-6"	—
B13(E)	1	#9	6'-5"	—
B14(E)	1	#9	12'-0"	—
B15(E)	1	#9	16'-1"	—
B16(E)	1	#9	19'-7"	—
B17(E)	1	#5	17'-2"	—
B18(E)	1	#5	8'-4"	—
D42(E)	1	#4	11'-7"	⌐ ¬
D43(E)	1	#4	11'-6"	⌐ ¬
D44(E)	1	#4	11'-4"	⌐ ¬
D45(E)	1	#4	11'-1"	⌐ ¬
D46(E)	1	#4	10'-11"	⌐ ¬
D47(E)	1	#4	10'-9"	⌐ ¬
D48(E)	1	#4	10'-6"	⌐ ¬
D49(E)	1	#4	10'-4"	⌐ ¬
D50(E)	1	#4	10'-2"	⌐ ¬
D51(E)	1	#4	10'-0"	⌐ ¬
D52(E)	1	#4	9'-9"	⌐ ¬
D53(E)	1	#4	9'-7"	⌐ ¬
D54(E)	1	#4	9'-5"	⌐ ¬
D55(E)	1	#4	9'-2"	⌐ ¬
D56(E)	1	#4	9'-0"	⌐ ¬
D57(E)	13	#4	8'-11"	⌐ ¬
D58(E)	1	#4	9'-8"	⌐ ¬
D59(E)	1	#4	9'-6"	⌐ ¬
D60(E)	1	#4	9'-4"	⌐ ¬
D61(E)	1	#4	9'-1"	⌐ ¬

BAR LIST
NORTH RIGHT EXTERIOR BEAM
(For information only)

Bar	No.	Size	Length	Shape
S60(E)	19	#5	19'-10"	⌐ ¬
S61(E)	14	#5	14'-8"	⌐ ¬
S62(E)	1	#5	13'-5"	⌐ ¬
S63(E)	1	#5	13'-4"	⌐ ¬
S64(E)	1	#5	13'-3"	⌐ ¬
S65(E)	1	#5	13'-2"	⌐ ¬
S66(E)	1	#5	13'-1"	⌐ ¬
S67(E)	1	#5	13'-0"	⌐ ¬
S68(E)	1	#5	12'-11"	⌐ ¬
S69(E)	1	#5	12'-10"	⌐ ¬
S70(E)	1	#5	12'-9"	⌐ ¬
S71(E)	1	#5	12'-8"	⌐ ¬
S72(E)	1	#5	12'-7"	⌐ ¬
S73(E)	1	#5	12'-6"	⌐ ¬
S74(E)	1	#5	12'-5"	⌐ ¬
S75(E)	1	#5	12'-4"	⌐ ¬
S76(E)	1	#5	12'-3"	⌐ ¬
S77(E)	1	#5	12'-2"	⌐ ¬
S78(E)	1	#5	12'-1"	⌐ ¬
S79(E)	1	#5	12'-0"	⌐ ¬
S80(E)	1	#5	11'-11"	⌐ ¬
S81(E)	1	#5	11'-10"	⌐ ¬
S82(E)	1	#5	11'-9"	⌐ ¬
S83(E)	1	#5	11'-8"	⌐ ¬
S84(E)	1	#5	11'-7"	⌐ ¬
S85(E)	1	#5	11'-6"	⌐ ¬
S86(E)	1	#5	11'-5"	⌐ ¬
S87(E)	1	#5	11'-4"	⌐ ¬
S88(E)	1	#5	11'-3"	⌐ ¬
S89(E)	1	#5	11'-2"	⌐ ¬
S90(E)	1	#5	11'-1"	⌐ ¬
S91(E)	1	#5	11'-0"	⌐ ¬
S92(E)	1	#5	10'-11"	⌐ ¬
S93(E)	1	#5	10'-10"	⌐ ¬
S94(E)	1	#5	10'-9"	⌐ ¬
S95(E)	1	#5	10'-8"	⌐ ¬
S96(E)	1	#5	10'-7"	⌐ ¬
S97(E)	6	#5	10'-6"	⌐ ¬

MODEL: 023-BEAMDET EXTNR2
FILE NAME: G:\Users\11\111335-01-Waltron-Road-over-I57-SuperstructureISurvey D366997\ConsultantData\Chamlin_2020\CAD_Sheets\0460153-66997-017-024_026-033-PCASTAPPSLAB.dgn
3/2/2021 2:59:16 PM

Chamlin & Associates

USER NAME = | DESIGNED - JKC | REVISED -
CHECKED - AJO | REVISED -
PLOT SCALE = | DRAWN - LAG | REVISED -
PLOT DATE = | CHECKED - JKC | REVISED -

STATE OF ILLINOIS
DEPARTMENT OF TRANSPORTATION

NORTH PRECAST BRIDGE APPROACH SLAB
STRUCTURE NO. 046-0153
SHEET 23 OF 54 SHEETS

F.A.I. RTE.	SECTION	COUNTY	TOTAL SHEETS	SHEET NO.
57	139HBR-6	KANKAKEE	202	112
		CONTRACT NO. 66997		
	ILLINOIS	FED. AID PROJECT		

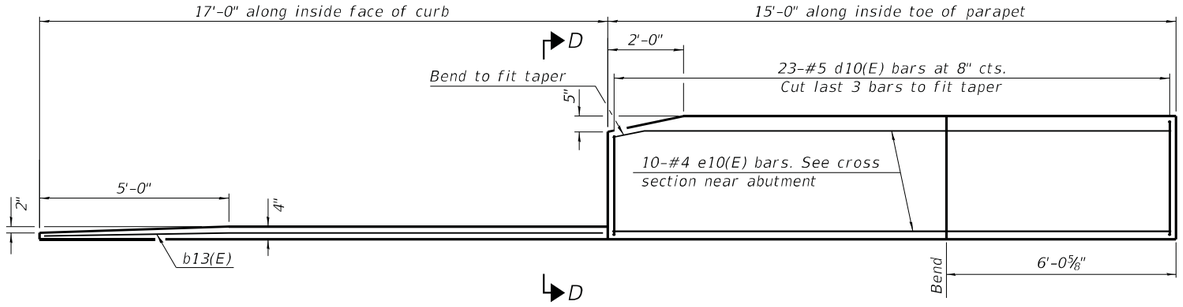

INSIDE ELEVATION OF EAST (LEFT) PARAPET AND CURB

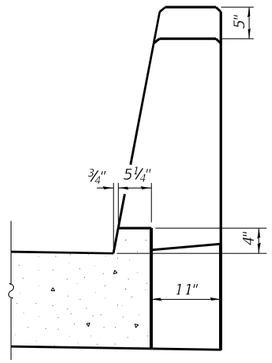

VIEW D-D

Notes:

The joint opening shall be adjusted for temperature per Article 520.04 of the Standard Specifications. However, since this detail is for jointless structures, the length of bridge used to calculate the adjustment shall be equal to half the total bridge length plus the length of the bridge approach slab.

After precast bridge approach slabs have been erected, holes shall be drilled into abutment and anchor dowels placed. Dowel holes shall be filled with non-shrink grout to top of precast slab and cured according to Article 1020.13(a)(3) or 1020.13(a)(5) of the Standard Specifications for a minimum of 24 hours before casting the shear keys and wearing surface.

Any concrete poured monolithically with the wearing surface, such as curbs, shall not be paid for separately, but will be included in the cost of Concrete Wearing Surface, 5".

The strip seal shall extend 6" beyond the edge of the approach slab on each end.

Parapet concrete shall be paid for as Concrete Superstructure.

Approach footing concrete shall be paid for as Concrete Structures.

The approach footing maximum applied service bearing pressure (Qmax) = 2.0 ksf.

Cost of excavation for approach footing included with Concrete Structures.

For Granular Backfill for Structures and drainage treatment details, see sheet 2 of 54.

Cost of cellular polystyrene is included with Concrete Superstructure.

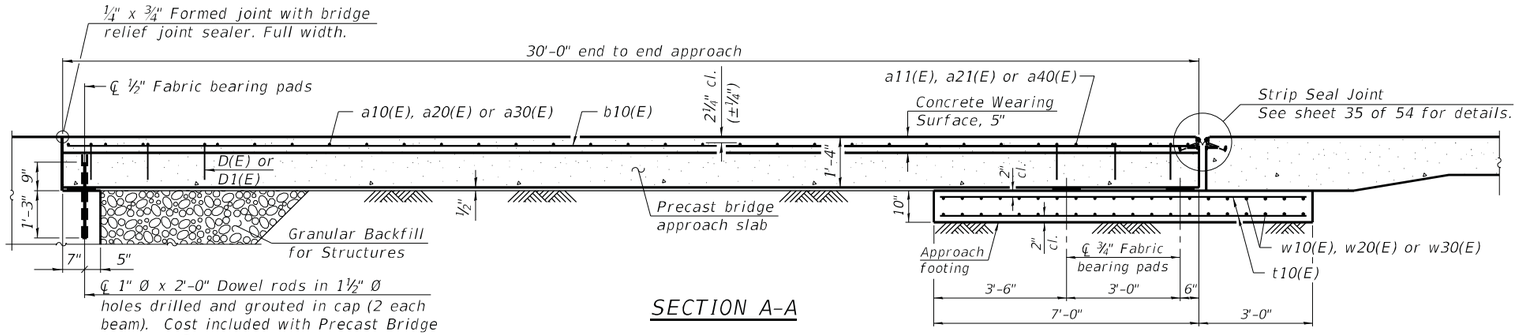

SECTION A-A

BILL OF MATERIAL

Bar	No.	Size	Length	Shape
a10(E)	16	#5	25'-0"	
a11(E)	20	#4	25'-0"	
a12(E)	26	#5	8'-2"	
a20(E)	8	#5	19'-10"	
a21(E)	10	#4	18'-5"	
a30(E)	8	#5	14'-2"	
a40(E)	10	#5	15'-3"	
b10(E)	43	#5	29'-5"	
b12(E)	4	#5	14'-7"	
b13(E)	1	#4	16'-9"	
b22(E)	4	#5	27'-5"	
d9(E)	53	#5	5'-3"	
d10(E)	76	#5	6'-5"	
d11(E)	23	#5	6'-5"	
d20(E)	41	#5	5'-0"	
d21(E)	41	#5	4'-9"	
e10(E)	10	#4	14'-9"	
e11(E)	12	#4	13'-3"	
e12(E)	4	#4	26'-9"	
e13(E)	12	#4	13'-1"	
e14(E)	4	#4	26'-6"	
e15(E)	10	#4	9'-0"	
t10(E)	96	#4	16'-6"	
w10(E)	80	#5	30'-0"	
w20(E)	40	#5	14'-6"	
w30(E)	40	#5	11'-1"	
Concrete Superstructure		Cu. Yd.	8.7	
Concrete Structures		Cu. Yd.	23.9	
Reinforcement Bars, Epoxy Coated		Pound	9550	
Precast Bridge Approach Slab		Sq. Ft.	1293	
Concrete Wearing Surface, 5"		Sq. Yd.	148	

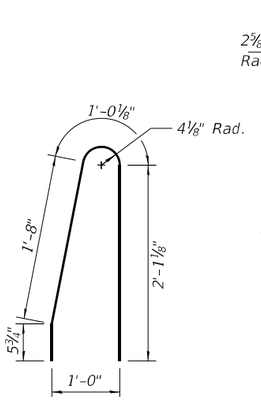

BAR d9(E)

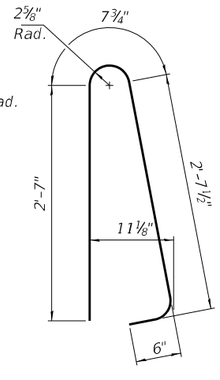

BAR d10(E)

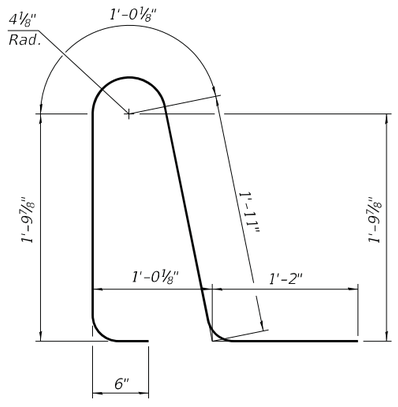

BAR d11(E)

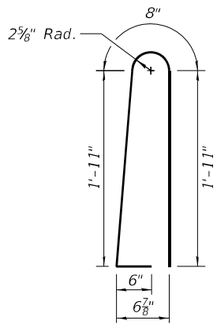

BAR d20(E)

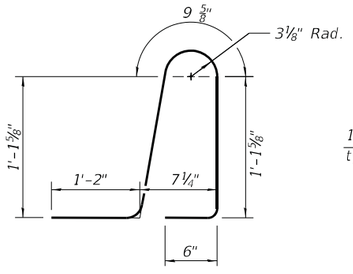

BAR d21(E)

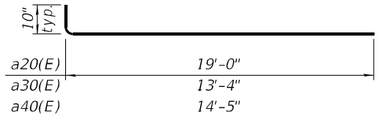

BAR a20(E), a30(E) or a40(E)



BAR a21(E)

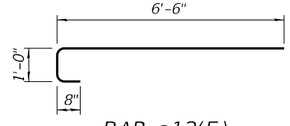

BAR a12(E)

USER NAME =	DESIGNED - JKC	REVISED -	STATE OF ILLINOIS DEPARTMENT OF TRANSPORTATION
	CHECKED - AJO	REVISED -	
PLOT SCALE =	DRAWN - LAG	REVISED -	
PLOT DATE =	CHECKED - JKC	REVISED -	

NORTH PRECAST BRIDGE APPROACH SLAB
STRUCTURE NO. 046-0153
SHEET 24 OF 54 SHEETS

F.A.I. RTE.	SECTION	COUNTY	TOTAL SHEETS	SHEET NO.
57	139HBR-6	KANKAKEE	202	113
		CONTRACT NO. 66997		
		ILLINOIS	FED. AID PROJECT	

Chamlin & Associates

MODEL: 024-NCURB5
FILE NAME: G:\Users\111\111335-01-Walbron-Road-over-I57-Superstructure\Survey D366997\Consultant_Data\Chamlin_2020\CAD_Sheets\0460153-66997-017-024_026-033-PCASTAPPSLAB.dgn
3/2/2021 3:01:08 PM

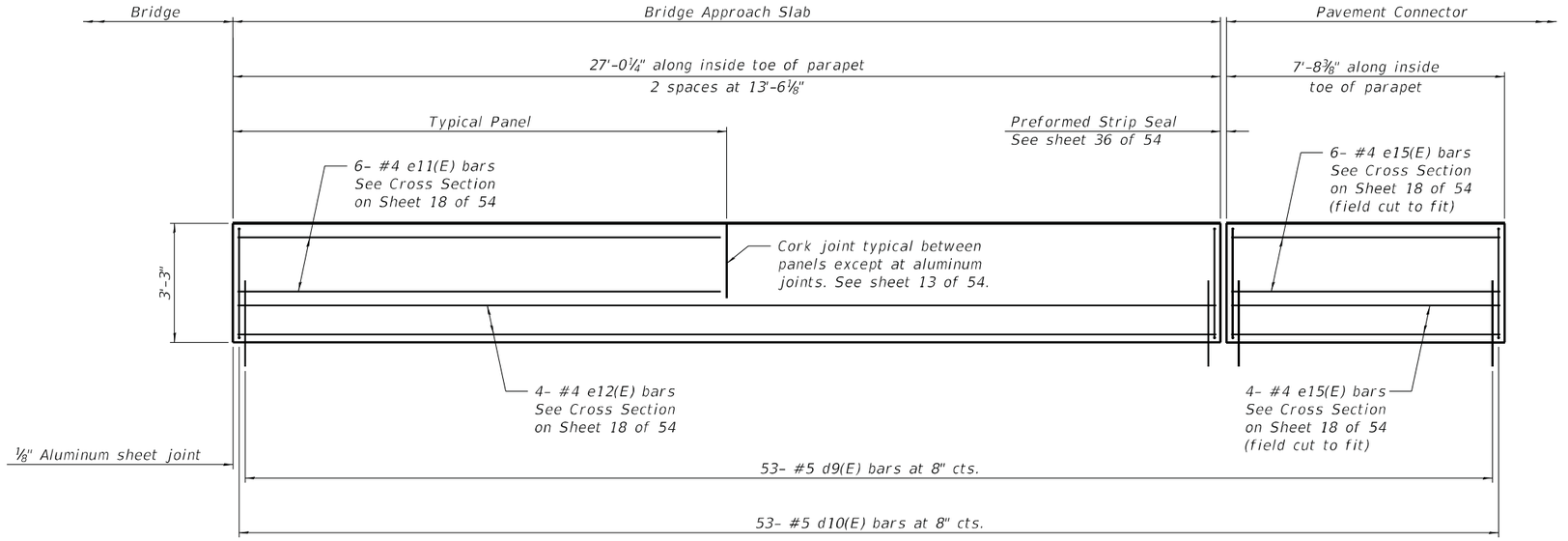

INSIDE ELEVATION OF WEST (RIGHT) PARAPET

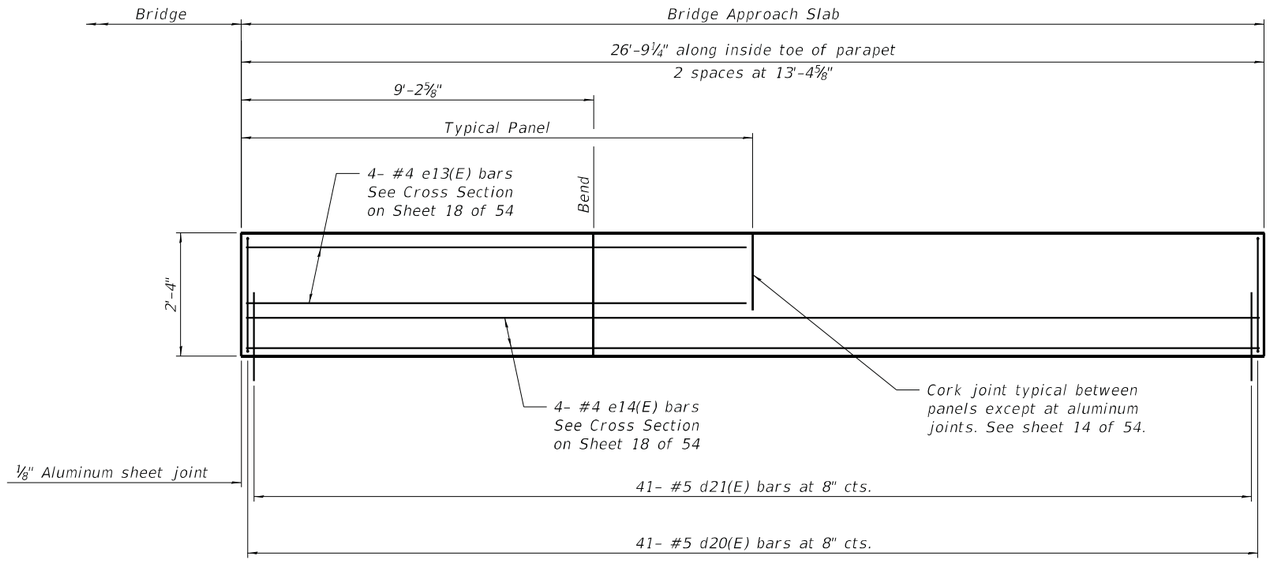

INSIDE ELEVATION OF SIDEWALK PARAPET

USER NAME =	DESIGNED - JKC	REVISED -	STATE OF ILLINOIS DEPARTMENT OF TRANSPORTATION
	CHECKED - AJO	REVISED -	
PLOT SCALE =	DRAWN - LAG	REVISED -	
PLOT DATE =	CHECKED - JKC	REVISED -	

NORTH PRECAST BRIDGE APPROACH SLAB
STRUCTURE NO. 046-0153
SHEET 25 OF 54 SHEETS

F.A.I. RTE.	SECTION	COUNTY	TOTAL SHEETS	SHEET NO.
57	139HBR-6	KANKAKEE	202	114
		CONTRACT NO. 66997		
	ILLINOIS	FED. AID PROJECT		

MODEL: 025-NWPARAPET
FILE NAME: G:\Users\11\111335-01-Wallbron-Road-over-I57-Superstructure\Survey D3669997\Consultant_Data\Chamlin_2020\CAD_Sheets\046015 3-66997-017-024_026-033-PCASTAPPSLAB.dgn
3/2/2021 3:03:07 PM

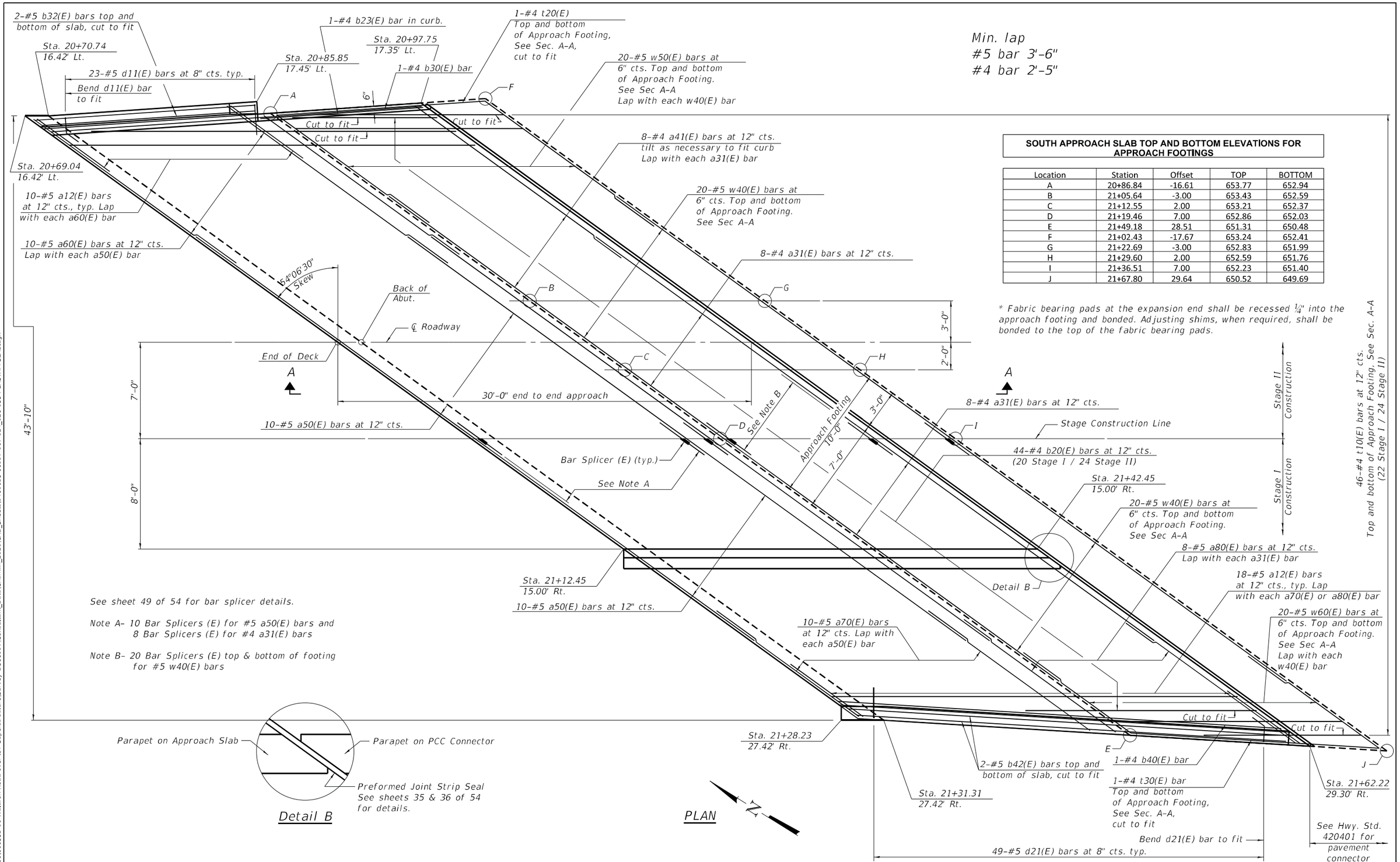

SOUTH APPROACH SLAB TOP AND BOTTOM ELEVATIONS FOR APPROACH FOOTINGS

Location	Station	Offset	TOP	BOTTOM
A	20+86.84	-16.61	653.77	652.94
B	21+05.64	-3.00	653.43	652.59
C	21+12.55	2.00	653.21	652.37
D	21+19.46	7.00	652.86	652.03
E	21+49.18	28.51	651.31	650.48
F	21+02.43	-17.67	653.24	652.41
G	21+22.69	-3.00	652.83	651.99
H	21+29.60	2.00	652.59	651.76
I	21+36.51	7.00	652.23	651.40
J	21+67.80	29.64	650.52	649.69

* Fabric bearing pads at the expansion end shall be recessed ¼" into the approach footing and bonded. Adjusting shims, when required, shall be bonded to the top of the fabric bearing pads.

(Sheet 1 of 9)

USER NAME =	DESIGNED - JKC	REVISED -	STATE OF ILLINOIS DEPARTMENT OF TRANSPORTATION	SOUTH PRECAST BRIDGE APPROACH SLAB STRUCTURE NO. 046-0153	
	CHECKED - AJO	REVISED -			
PLOT SCALE =	DRAWN - LAG	REVISED -			
PLOT DATE =	CHECKED - JKC	REVISED -		SHEET 26 OF 54 SHEETS	

F.A.I. RTE.	SECTION	COUNTY	TOTAL SHEETS	SHEET NO.
57	139HBR-6	KANKAKEE	202	115
		CONTRACT NO. 66997		
	ILLINOIS FED. AID PROJECT			

Chamlin & Associates

3/2/2021 2:52:16 PM

MODEL: 026-SOUTHPLAN
FILE NAME: G:\Users\1111111335-01-Waltiron-Road-over-I57-SuperstructureSurvey D3669997\Consultant_Data\Chamlin_2020\CAD_Sheets\0460153-66997-017-024_026-033-PCASTAPPSLAB.dgn

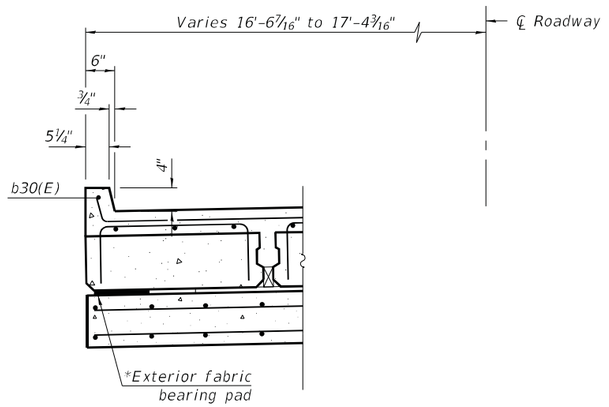

SOUTHEAST CURB DETAIL
(Looking South)

Note A
Drill and set #5 d9(E) bars according to Article 584 of the Standard Specifications. Drilled holes shall be roughed or scored per Manufactorer's recommendations. Maximum depth of hole shall not exceed 6" Contractor shall take all necessary precautions to prevent drilled hole interference with deck reinforcement. Locate longitudinal bars to miss drilled locations. Locate drilled holes to miss transverse bars in deck.

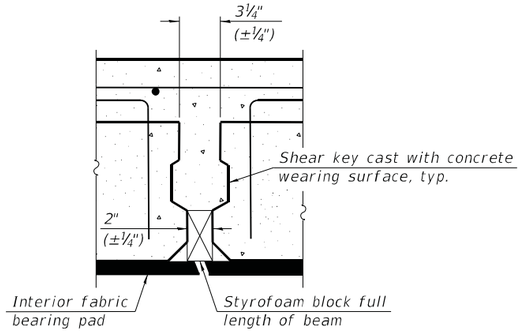

DETAIL 'A'

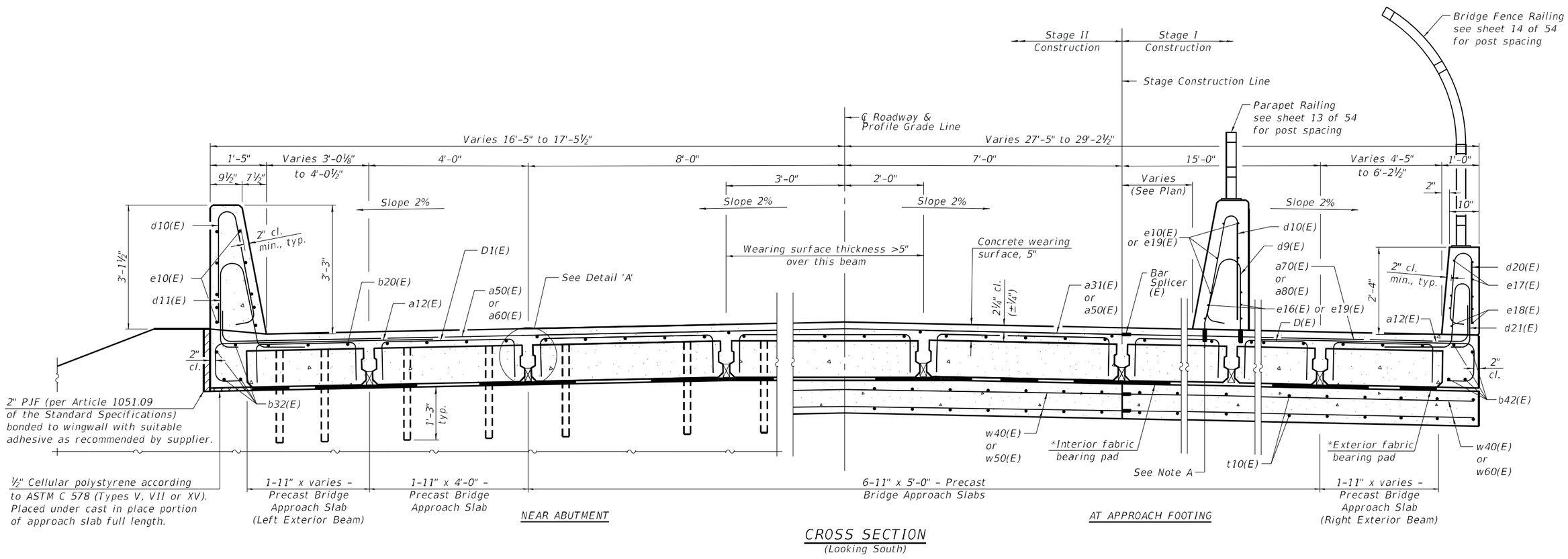

CROSS SECTION
(Looking South)

MODEL: 027-SOUTH XS
FILE NAME: G:\Users\111\111335-01-Walthron-Road-over-I57-Superstructure\Survey D3669997\Consultant_Data\Chamlin_2020\CAD_Sheets\046015\3-66997-017-024_026-033-PCASTAPPSLAB.dgn
3/2/2021 3:03:43 PM

Chamlin & Associates

USER NAME =	DESIGNED - JKC	REVISED -
	CHECKED - AJO	REVISED -
PLOT SCALE =	DRAWN - LAG	REVISED -
PLOT DATE =	CHECKED - JKC	REVISED -

STATE OF ILLINOIS
DEPARTMENT OF TRANSPORTATION

SOUTH PRECAST BRIDGE APPROACH SLAB
STRUCTURE NO. 046-0153
SHEET 27 OF 54 SHEETS

F.A.I. RTE.	SECTION	COUNTY	TOTAL SHEETS	SHEET NO.
57	139HBR-6	KANKAKEE	202	116
		CONTRACT NO. 66997		
	ILLINOIS	FED. AID PROJECT		

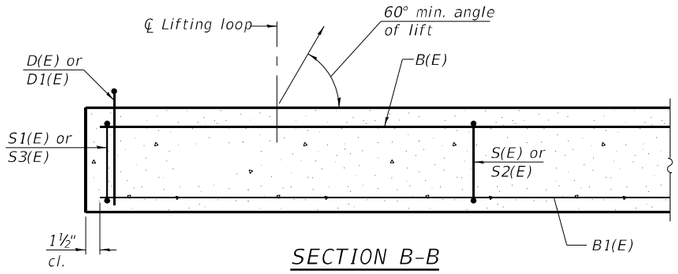

SECTION B-B

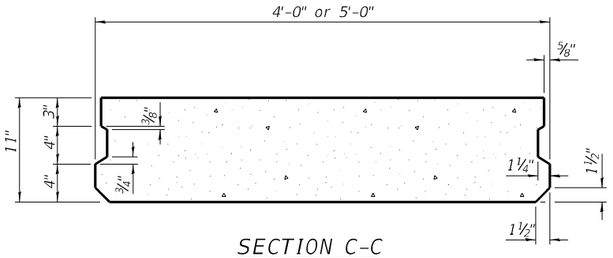

SECTION C-C
(Showing dimensions)

Notes:
The precast bridge approach slab shall be according to Section 504 of the Standard Specifications and shall be paid for at the contract unit price per square foot for Precast Bridge Approach Slab.
Cast-in-place substitution of Precast Bridge Approach Slab is not allowed.
The top surface of precast bridge approach slabs shall be finished similar to precast prestressed deck beams with concrete wearing surface as specified in the IDOT "Manual for Fabrication of Precast Prestressed Concrete Products."
Two ⅛" fabric adjusting shims of the dimensions of the exterior bearing pad shall be provided for each bearing pad location. Cost included with Precast Bridge Approach Slab.
A minimum 2 ½" Ø lifting pins shall be used to engage the lifting loops during handling.
Compressive strength of precast concrete, f'c shall be 6,000 psi.
Compressive strength of precast concrete during initial lifting, f'ci shall be 5,000 psi.

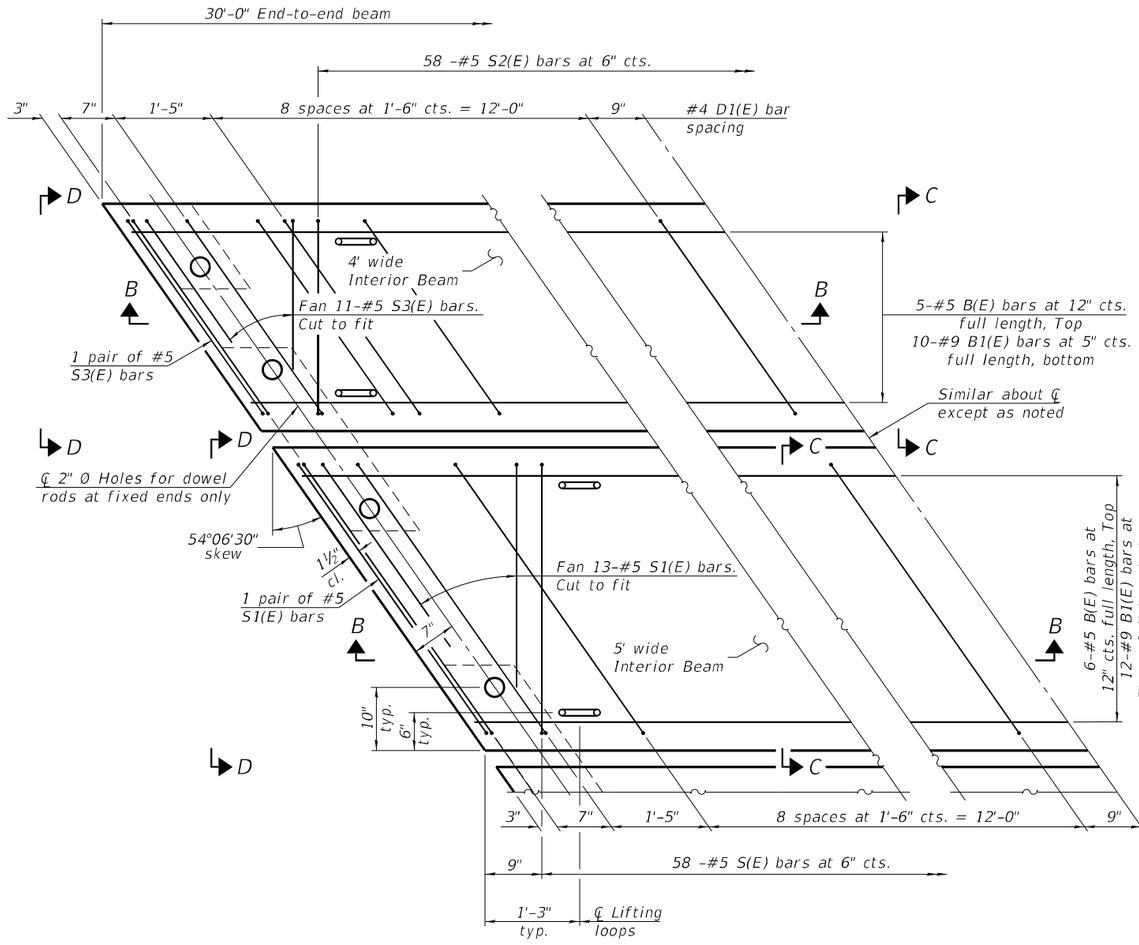

PLAN VIEW
(showing precast bridge approach beams)
(Spacing of D(E) and D1(E) bars may be adjusted up to 3" to miss the dowel rod holes and the lifting loops at the beam ends)

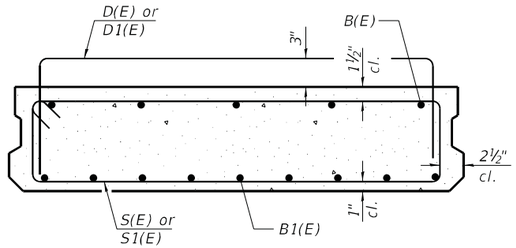

SECTION C-C
(Showing reinforcement)

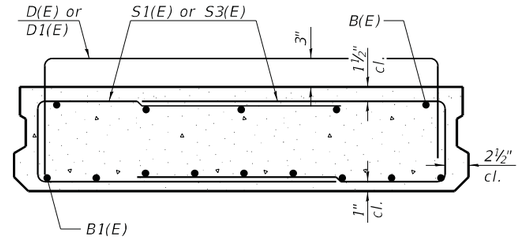

VIEW D-D
(Showing reinforcement)



BARS D(E) & D1(E)

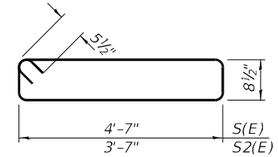

BARS S(E) & S2(E)

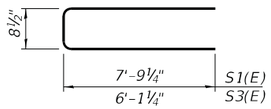

BARS S1(E) & S3(E)

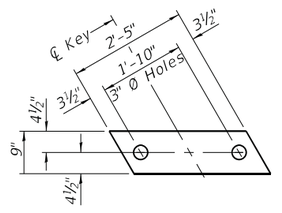

INTERIOR

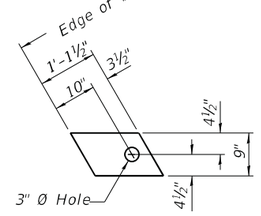

EXTERIOR

FABRIC BEARING PAD

Notes:
Bearing pads at fixed end shall be ½" thick and bearing pads at expansion end shall be ¾" thick.
Omit holes for fabric bearing pads at approach slab footing end of beams.

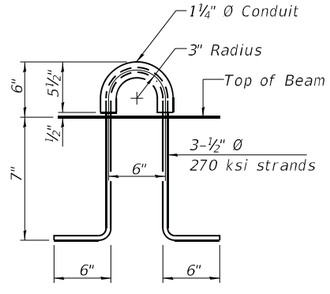

LIFTING LOOP DETAIL
(An alternate lifting loop with a proof load of 25,000 lbs. and utilized according to the manufacturer's recommendations may be used)

BAR LIST
EACH 5' WIDE INTERIOR BEAM
(For information only)

Bar	No.	Size	Length	Shape
B(E)	6	#5	29'-8"	—
B1(E)	12	#9	29'-8"	—
D(E)	22	#4	9'-9"	⌐ ¬
S(E)	58	#5	11'-6"	⌐ ¬
S1(E)	30	#5	16'-3"	⌐ ¬

BAR LIST
EACH 4' WIDE INTERIOR BEAM
(For information only)

Bar	No.	Size	Length	Shape
B(E)	5	#5	29'-8"	—
B1(E)	10	#9	29'-8"	—
D1(E)	32	#4	8'-1"	⌐ ¬
S2(E)	58	#5	9'-6"	⌐ ¬
S3(E)	26	#5	12'-3"	⌐ ¬

(Sheet 3 of 9)

MODEL: 028-SOUTH BEAMDET 4ft 5ft
FILE NAME: G:\Users\1111335-01-Waldron-Road-over-I57-SuperstructureISurvey D366997\ConsultantData\Chamlin_2020\CAD_Sheets\0460153-66997-017-024_026-033-PCASTAPPSLAB.dgn
3/2/2021 3:06:51 PM

Chamlin & Associates

USER NAME =	DESIGNED - JKC	REVISED -	
	CHECKED - AJO	REVISED -	
PLOT SCALE =	DRAWN - LAG	REVISED -	
PLOT DATE =	CHECKED - JKC	REVISED -	

STATE OF ILLINOIS
DEPARTMENT OF TRANSPORTATION

SOUTH PRECAST BRIDGE APPROACH SLABS
STRUCTURE NO. 046-0153
SHEET 28 OF 54 SHEETS

F.A.I. RTE.	SECTION	COUNTY	TOTAL SHEETS	SHEET NO.
57	139HBR-6	KANKAKEE	202	117
		CONTRACT NO. 66997		
	ILLINOIS	FED. AID PROJECT		

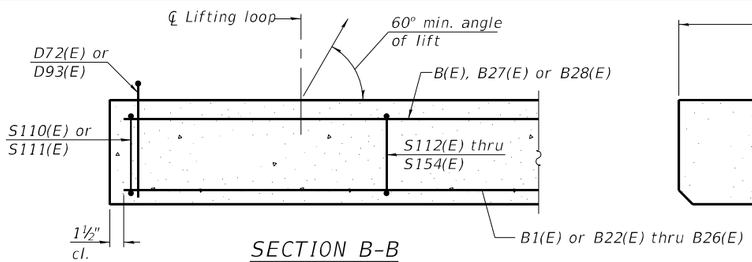

SECTION B-B

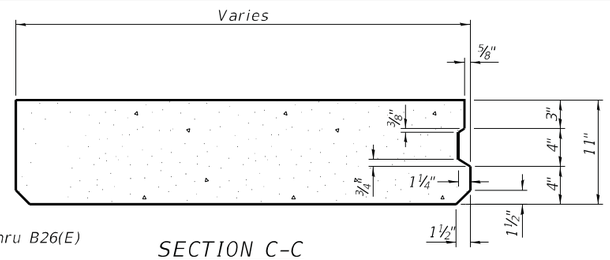

SECTION C-C
(Showing dimensions)

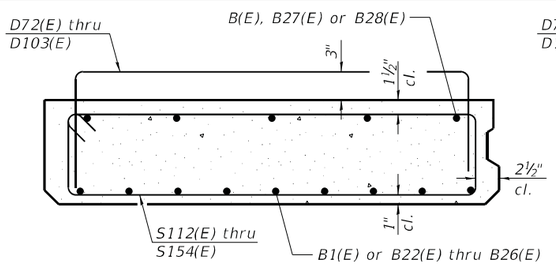

SECTION C-C
(Showing reinforcement)

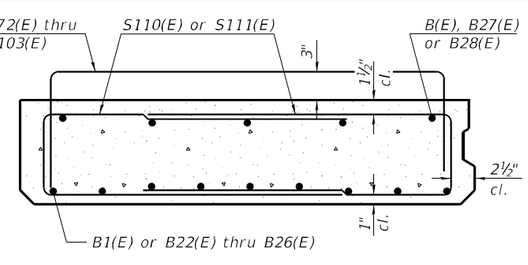

VIEW D-D
(Showing reinforcement)

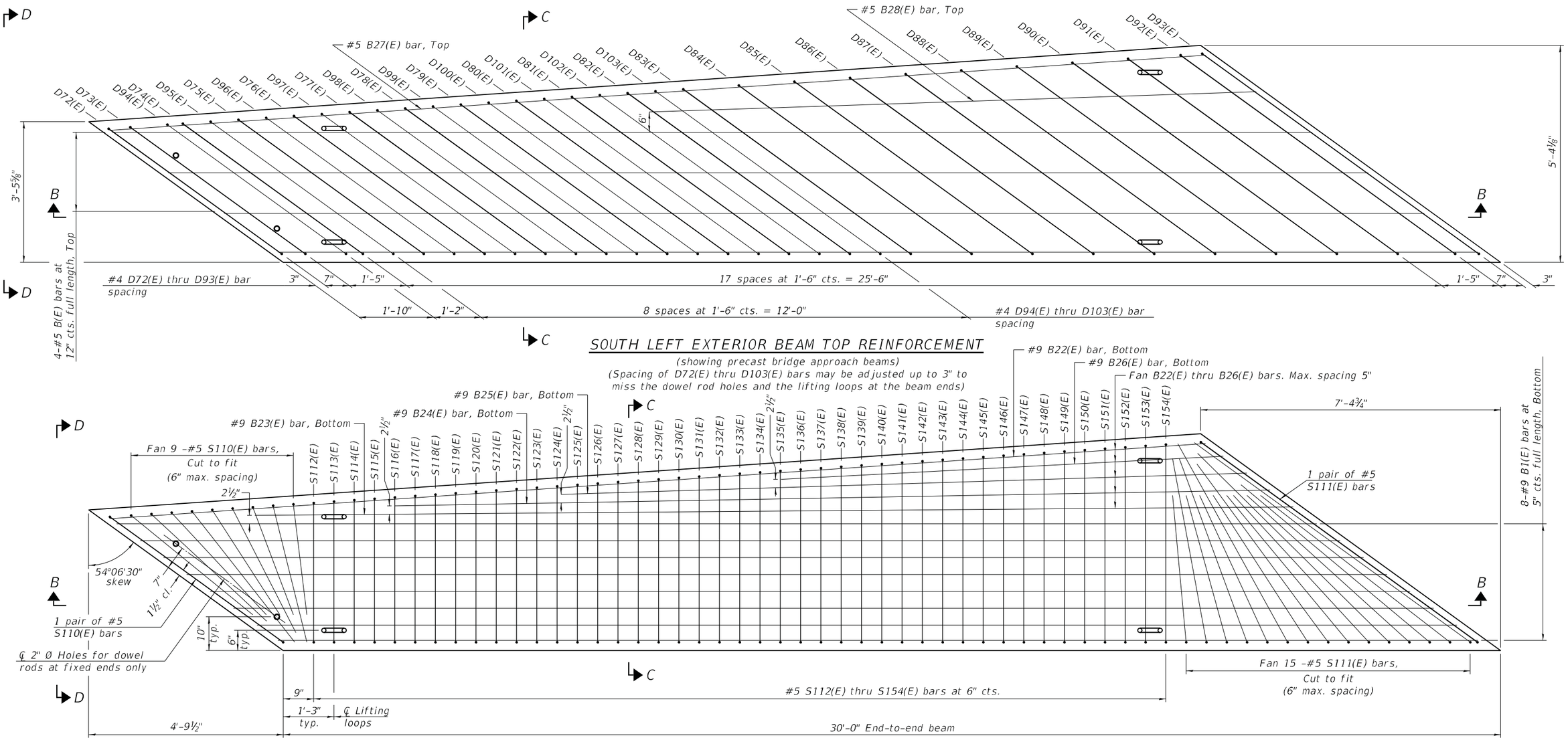

SOUTH LEFT EXTERIOR BEAM TOP REINFORCEMENT
(showing precast bridge approach beams)
(Spacing of D72(E) thru D103(E) bars may be adjusted up to 3" to miss the dowel rod holes and the lifting loops at the beam ends)

SOUTH LEFT EXTERIOR BEAM BOTTOM REINFORCEMENT

USER NAME =	DESIGNED - JKC	REVISED -	
	CHECKED - AJO	REVISED -	
PLOT SCALE =	DRAWN - LAG	REVISED -	
PLOT DATE =	CHECKED - JKC	REVISED -	

Chamlin & Associates

STATE OF ILLINOIS
DEPARTMENT OF TRANSPORTATION

SOUTH PRECAST BRIDGE APPROACH SLAB
STRUCTURE NO. 046-0153
SHEET 29 OF 54 SHEETS

F.A.I. RTE.	SECTION	COUNTY	TOTAL SHEETS	SHEET NO.
57	139HBR-6	KANKAKEE	202	118
		CONTRACT NO. 66997		
	ILLINOIS FED. AID PROJECT			

MODEL: 029-BEAMDET EXTSL
FILE NAME: G:\Users\11\11335-01-Walltron-Road-over-I57-Superstructure\Survey D3669997\Consultant_Data\Chamlin_2020\CAD_Sheets\0460153-66997-017-024_026-033-PCASTAPPSLAB.dgn
3/2/2021 3:04:36 PM

5'-3" D72(E)
5'-4" D73(E)
5'-5" D74(E)
5'-7" D75(E)
5'-9" D76(E)
5'-11" D77(E)
6'-1" D78(E)
6'-3" D79(E)
6'-5" D80(E)
6'-7" D81(E)
6'-9" D82(E)
6'-11" D83(E)
7'-1" D84(E)
7'-2" D85(E)
7'-4" D86(E)
7'-6" D87(E)
7'-8" D88(E)
7'-10" D89(E)
8'-0" D90(E)
8'-2" D91(E)
8'-4" D92(E)
8'-5" D93(E)
5'-5" D94(E)
5'-6" D95(E)
5'-8" D96(E)
5'-10" D97(E)
6'-0" D98(E)
6'-2" D99(E)
6'-4" D100(E)
6'-6" D101(E)
6'-8" D102(E)
6'-10" D103(E)

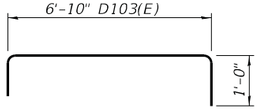

BARS D72(E) thru D103(E)

3'-5" S112(E)
3'-5½" S113(E)
3'-6" S114(E)
3'-6½" S115(E)
3'-6½" S116(E)
3'-7" S117(E)
3'-7½" S118(E)
3'-8" S119(E)
3'-8½" S120(E)
3'-8½" S121(E)
3'-9" S122(E)
3'-9½" S123(E)
3'-10" S124(E)
3'-10½" S125(E)
3'-11" S126(E)
3'-11" S127(E)
3'-11½" S128(E)
4'-0" S129(E)
4'-0½" S130(E)
4'-1" S131(E)
4'-1½" S132(E)
4'-1½" S133(E)
4'-2" S134(E)
4'-2½" S135(E)
4'-3" S136(E)
4'-3½" S137(E)
4'-3½" S138(E)
4'-4" S139(E)
4'-4½" S140(E)
4'-5" S141(E)
4'-5½" S142(E)
4'-6" S143(E)
4'-6" S144(E)
4'-6½" S145(E)
4'-7" S146(E)
4'-7½" S147(E)
4'-8" S148(E)
4'-8½" S149(E)
4'-8½" S150(E)
4'-9" S151(E)
4'-9½" S152(E)
4'-10" S153(E)
4'-10½" S154(E)

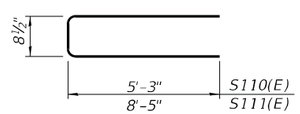

BARS S110(E) & S111(E)

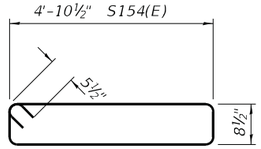

BARS S112(E) thru S154(E)

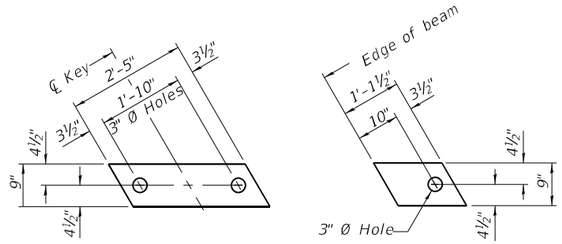

FABRIC BEARING PAD

Notes:
Bearing pads at fixed end shall be ½" thick and bearing pads at expansion end shall be ¾" thick.
Omit holes for fabric bearing pads at approach slab footing end of beams.

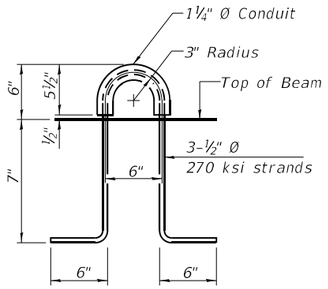

LIFTING LOOP DETAIL

(An alternate lifting loop with a proof load of 25,000 lbs. and utilized according to the manufacturer's recommendations may be used)

Notes:
The precast bridge approach slab shall be according to Section 504 of the Standard Specifications and shall be paid for at the contract unit price per square foot for Precast Bridge Approach Slab.
Cast-in-place substitution of Precast Bridge Approach Slab is not allowed.
The top surface of precast bridge approach slabs shall be finished similar to precast prestressed deck beams with concrete wearing surface as specified in the IDOT "Manual for Fabrication of Precast Prestressed Concrete Products."
Two ⅛" fabric adjusting shims of the dimensions of the exterior bearing pad shall be provided for each bearing pad location. Cost included with Precast Bridge Approach Slab.
A minimum 2 ½" Ø lifting pins shall be used to engage the lifting loops during handling.
Compressive strength of precast concrete, f'c shall be 6,000 psi.
Compressive strength of precast concrete during initial lifting, f'ci shall be 5,000 psi.

BAR LIST
SOUTH LEFT EXTERIOR BEAM
(For information only)

Bar	No.	Size	Length	Shape
B(E)	4	#5	29'-8"	
B1(E)	8	#9	29'-8"	
B22(E)	1	#9	27'-1"	
B23(E)	1	#9	25'-7"	
B24(E)	1	#9	21'-7"	
B25(E)	1	#9	16'-10"	
B26(E)	1	#9	10'-11"	
B27(E)	1	#5	27'-1"	
B28(E)	1	#5	14'-11"	
D72(E)	1	#4	7'-3"	
D73(E)	1	#4	7'-4"	
D74(E)	1	#4	7'-5"	
D75(E)	1	#4	7'-7"	
D76(E)	1	#4	7'-9"	
D77(E)	1	#4	7'-11"	
D78(E)	1	#4	8'-1"	
D79(E)	1	#4	8'-3"	
D80(E)	1	#4	8'-5"	
D81(E)	1	#4	8'-7"	
D82(E)	1	#4	8'-9"	
D83(E)	1	#4	8'-11"	
D84(E)	1	#4	9'-1"	
D85(E)	1	#4	9'-2"	
D86(E)	1	#4	9'-4"	
D87(E)	1	#4	9'-6"	
D88(E)	1	#4	9'-8"	
D89(E)	1	#4	9'-10"	
D90(E)	1	#4	10'-0"	
D91(E)	1	#4	10'-2"	
D92(E)	1	#4	10'-4"	
D93(E)	1	#4	10'-5"	
D94(E)	1	#4	7'-5"	
D95(E)	1	#4	7'-6"	
D96(E)	1	#4	7'-8"	
D97(E)	1	#4	7'-10"	
D98(E)	1	#4	8'-0"	
D99(E)	1	#4	8'-2"	
D100(E)	1	#4	8'-4"	
D101(E)	1	#4	8'-6"	
D102(E)	1	#4	8'-8"	
D103(E)	1	#4	8'-10"	

BAR LIST
SOUTH LEFT EXTERIOR BEAM
(For information only)

Bar	No.	Size	Length	Shape
S110(E)	11	#5	11'-3"	
S111(E)	17	#5	17'-7"	
S112(E)	1	#5	9'-2"	
S113(E)	1	#5	9'-3"	
S114(E)	1	#5	9'-4"	
S115(E)	1	#5	9'-5"	
S116(E)	1	#5	9'-5"	
S117(E)	1	#5	9'-6"	
S118(E)	1	#5	9'-7"	
S119(E)	1	#5	9'-8"	
S120(E)	1	#5	9'-9"	
S121(E)	1	#5	9'-9"	
S122(E)	1	#5	9'-10"	
S123(E)	1	#5	9'-11"	
S124(E)	1	#5	10'-0"	
S125(E)	1	#5	10'-1"	
S126(E)	1	#5	10'-2"	
S127(E)	1	#5	10'-2"	
S128(E)	1	#5	10'-3"	
S129(E)	1	#5	10'-4"	
S130(E)	1	#5	10'-5"	
S131(E)	1	#5	10'-6"	
S132(E)	1	#5	10'-7"	
S133(E)	1	#5	10'-7"	
S134(E)	1	#5	10'-8"	
S135(E)	1	#5	10'-9"	
S136(E)	1	#5	10'-10"	
S137(E)	1	#5	10'-11"	
S138(E)	1	#5	10'-11"	
S139(E)	1	#5	11'-0"	
S140(E)	1	#5	11'-1"	
S141(E)	1	#5	11'-2"	
S142(E)	1	#5	11'-3"	
S143(E)	1	#5	11'-4"	
S144(E)	1	#5	11'-4"	
S145(E)	1	#5	11'-5"	
S146(E)	1	#5	11'-6"	
S147(E)	1	#5	11'-7"	
S148(E)	1	#5	11'-8"	
S149(E)	1	#5	11'-9"	
S150(E)	1	#5	11'-9"	
S151(E)	1	#5	11'-10"	
S152(E)	1	#5	11'-11"	
S153(E)	1	#5	12'-0"	
S154(E)	1	#5	12'-1"	

MODEL: 030-BEAMDET EXTSL2
FILE NAME: G:\Users\11\111335-01-Walthron-Road-over-I57-SuperstructureSurvey_D366997\ConsultantData\Chamlin_2020\CAD_Sheets\046015

USER NAME =	DESIGNED - JKC	REVISED -	
	CHECKED - AJO	REVISED -	
PLOT SCALE =	DRAWN - LAG	REVISED -	
PLOT DATE =	CHECKED - JKC	REVISED -	

Chamlin & Associates

STATE OF ILLINOIS
DEPARTMENT OF TRANSPORTATION

SOUTH PRECAST BRIDGE APPROACH SLAB
STRUCTURE NO. 046-0153
SHEET 30 OF 54 SHEETS

F.A.I. RTE.	SECTION	COUNTY	TOTAL SHEETS	SHEET NO.
57	139HBR-6	KANKAKEE	202	119
		CONTRACT NO. 66997		
	ILLINOIS	FED. AID PROJECT		

3/2/2021 3:05:08 PM

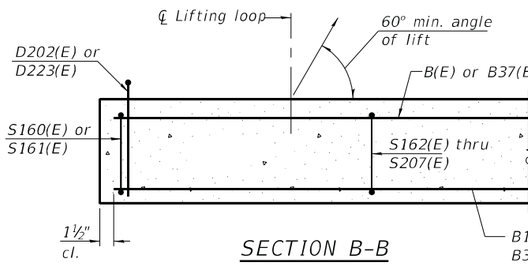

SECTION B-B

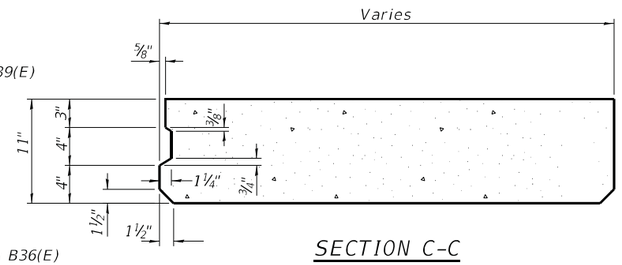

SECTION C-C
(Showing dimensions)

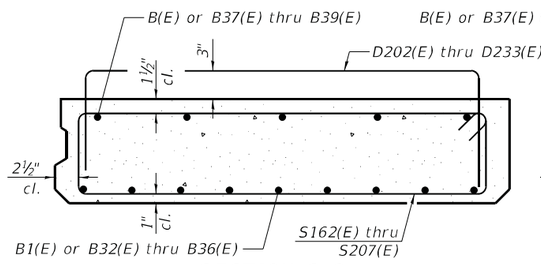

SECTION C-C
(Showing reinforcement)

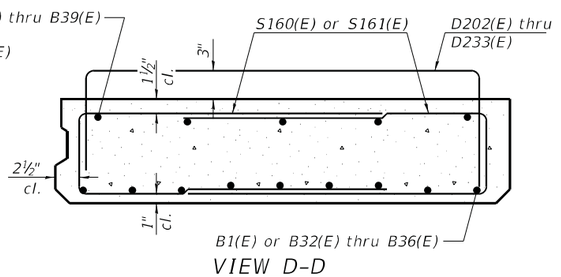

VIEW D-D
(Showing reinforcement)

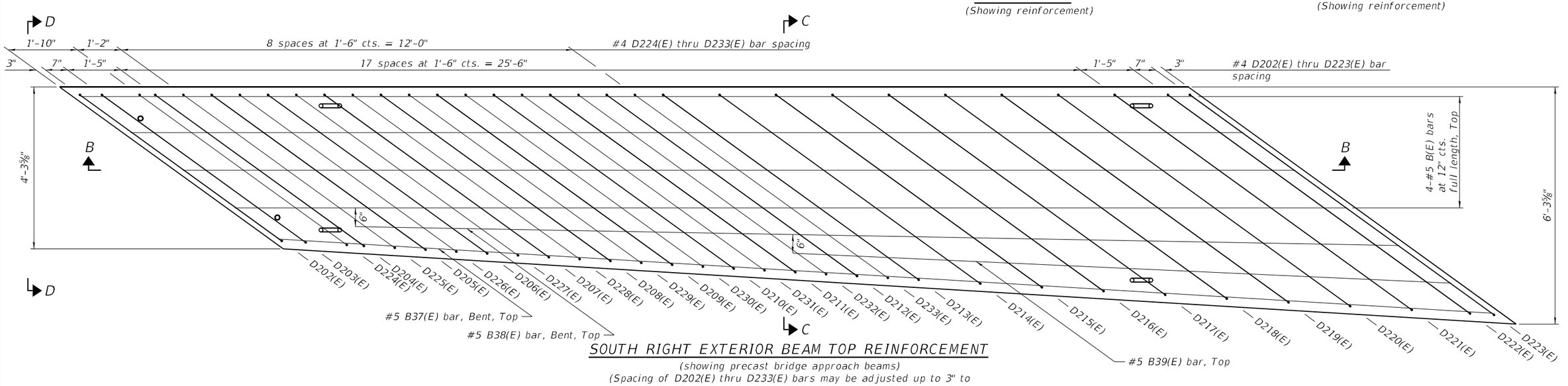

SOUTH RIGHT EXTERIOR BEAM TOP REINFORCEMENT
(showing precast bridge approach beams)
(Spacing of D202(E) thru D233(E) bars may be adjusted up to 3" to miss the dowel rod holes and the lifting loops at the beam ends)

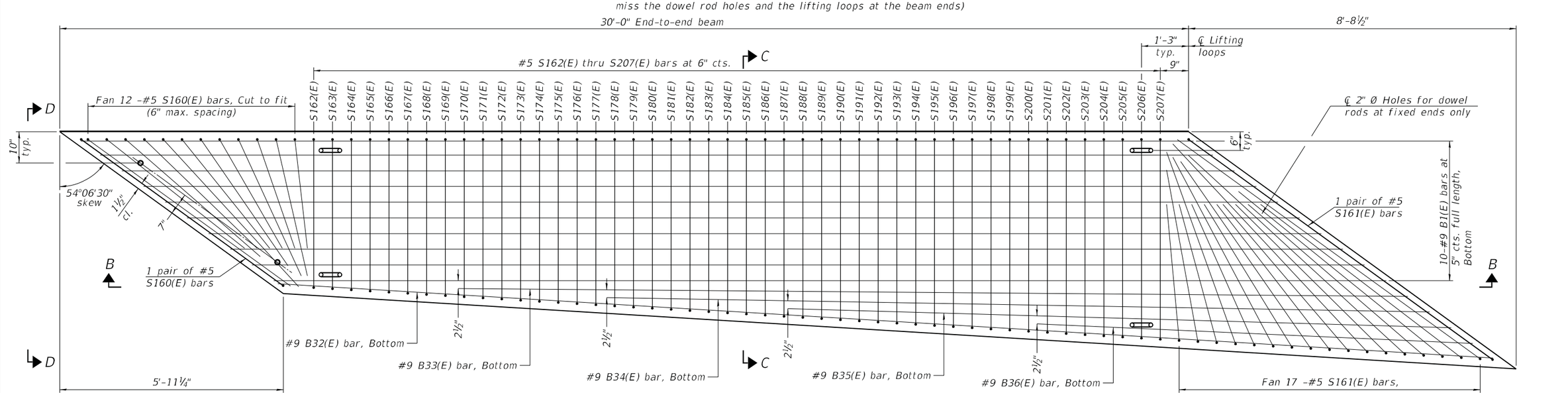

SOUTH RIGHT EXTERIOR BEAM BOTTOM REINFORCEMENT

USER NAME =	DESIGNED - JKC	REVISED -	STATE OF ILLINOIS DEPARTMENT OF TRANSPORTATION
	CHECKED - AJO	REVISED -	
PLOT SCALE =	DRAWN - LAG	REVISED -	
PLOT DATE =	CHECKED - JKC	REVISED -	

Chamlin & Associates

SOUTH PRECAST BRIDGE APPROACH SLAB
STRUCTURE NO. 046-0153
SHEET 31 OF 54 SHEETS

F.A.I. RTE.	SECTION	COUNTY	TOTAL SHEETS	SHEET NO.
57	139HBR-6	KANKAKEE	202	120
		CONTRACT NO. 66997		
	ILLINOIS	FED. AID PROJECT		

MODEL: 031-BEAMDET EXTSR
FILE NAME: G:\Users\11\11335-01-Waldron-Road-over-I57-Superstructure\Survey D366997\Consultant_Data\Chamlin_2020\CAD_Sheets\046015

3/2/2021 3:05:44 PM

6'-7" D202(E)
6'-8" D203(E)
6'-10" D204(E)
7'-0" D205(E)
7'-2" D206(E)
7'-4" D207(E)
7'-6" D208(E)
7'-8" D209(E)
7'-10" D210(E)
8'-0" D211(E)
8'-2" D212(E)
8'-4" D213(E)
8'-6" D214(E)
8'-8" D215(E)
8'-10" D216(E)
9'-0" D217(E)
9'-2" D218(E)
9'-4" D219(E)
9'-6" D220(E)
9'-9" D221(E)
9'-10" D222(E)
9'-11" D223(E)
6'-9" D224(E)
6'-11" D225(E)
7'-1" D226(E)
7'-3" D227(E)
7'-5" D228(E)
7'-7" D229(E)
7'-9" D230(E)
7'-11" D231(E)
8'-1" D232(E)
8'-3" D233(E)

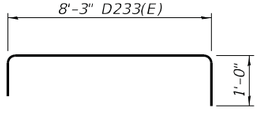

BARS D202(E) thru D233(E)

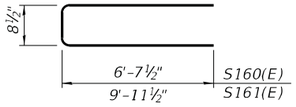

BARS S160(E) & S161(E)

3'-11" S162(E)
3'-11½" S163(E)
4'-0" S164(E)
4'-0" S165(E)
4'-0½" S166(E)
4'-1" S167(E)
4'-1" S168(E)
4'-1½" S169(E)
4'-2" S170(E)
4'-2½" S171(E)
4'-2½" S172(E)
4'-3" S173(E)
4'-3½" S174(E)
4'-4" S175(E)
4'-4" S176(E)
4'-4½" S177(E)
4'-5" S178(E)
4'-5½" S179(E)
4'-5½" S180(E)
4'-6" S181(E)
4'-6½" S182(E)
4'-6½" S183(E)
4'-7" S184(E)
4'-7½" S185(E)
4'-8" S186(E)
4'-8" S187(E)
4'-8½" S188(E)
4'-9" S189(E)
4'-9½" S190(E)
4'-9½" S191(E)
4'-10" S192(E)
4'-10½" S193(E)
4'-11" S194(E)
4'-11" S195(E)
4'-11½" S196(E)
5'-0" S197(E)
5'-0" S198(E)
5'-0½" S199(E)
5'-1" S200(E)
5'-1½" S201(E)
5'-1½" S202(E)
5'-2" S203(E)
5'-2½" S204(E)
5'-3" S205(E)
5'-3" S206(E)
5'-3½" S207(E)

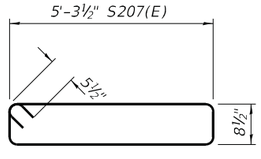

BARS S162(E) thru S207(E)

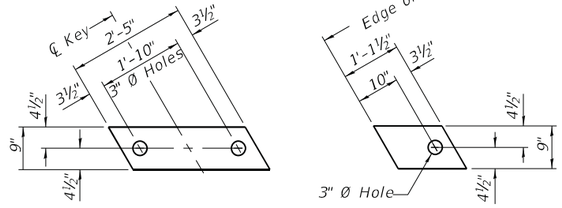

FABRIC BEARING PAD

Notes:
Bearing pads at fixed end shall be ½" thick and bearing pads at expansion end shall be ¾" thick.
Omit holes for fabric bearing pads at approach slab footing end of beams.

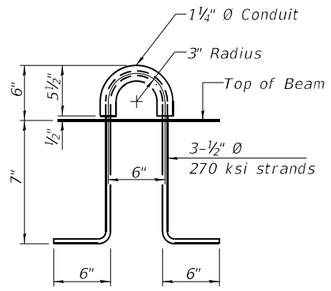

LIFTING LOOP DETAIL

(An alternate lifting loop with a proof load of 25,000 lbs. and utilized according to the manufacturer's recommendations may be used)

Notes:
The precast bridge approach slab shall be according to Section 504 of the Standard Specifications and shall be paid for at the contract unit price per square foot for Precast Bridge Approach Slab.
Cast-in-place substitution of Precast Bridge Approach Slab is not allowed.
The top surface of precast bridge approach slabs shall be finished similar to precast prestressed deck beams with concrete wearing surface as specified in the IDOT "Manual for Fabrication of Precast Prestressed Concrete Products."
Two ⅛" fabric adjusting shims of the dimensions of the exterior bearing pad shall be provided for each bearing pad location. Cost included with Precast Bridge Approach Slab.
A minimum 2 ½" Ø lifting pins shall be used to engage the lifting loops during handling.
Compressive strength of precast concrete, f'c shall be 6,000 psi.
Compressive strength of precast concrete during initial lifting, f'ci shall be 5,000 psi.

BAR LIST
SOUTH RIGHT EXTERIOR BEAM
(For information only)

Bar	No.	Size	Length	Shape
B(E)	4	#5	29'-8"	—
B1(E)	10	#9	29'-8"	—
B32(E)	1	#9	32'-4"	—
B33(E)	1	#9	25'-3"	—
B34(E)	1	#9	21'-10"	—
B35(E)	1	#9	17'-7"	—
B36(E)	1	#9	11'-7"	—
B37(E)	1	#5	32'-4"	—
B38(E)	1	#5	27'-9"	—
B39(E)	1	#5	17'-6"	—
D202(E)	1	#4	8'-7"	[
D203(E)	1	#4	8'-8"	[
D204(E)	1	#4	8'-10"	[
D205(E)	1	#4	9'-0"	[
D206(E)	1	#4	9'-2"	[
D207(E)	1	#4	9'-4"	[
D208(E)	1	#4	9'-6"	[
D209(E)	1	#4	9'-8"	[
D210(E)	1	#4	9'-10"	[
D211(E)	1	#4	10'-0"	[
D212(E)	1	#4	10'-2"	[
D213(E)	1	#4	10'-4"	[
D214(E)	1	#4	10'-6"	[
D215(E)	1	#4	10'-8"	[
D216(E)	1	#4	10'-10"	[
D217(E)	1	#4	11'-0"	[
D218(E)	1	#4	11'-2"	[
D219(E)	1	#4	11'-4"	[
D220(E)	1	#4	11'-6"	[
D221(E)	1	#4	11'-9"	[
D222(E)	1	#4	11'-10"	[
D223(E)	1	#4	11'-11"	[
D224(E)	1	#4	8'-9"	[
D225(E)	1	#4	8'-11"	[
D226(E)	1	#4	9'-1"	[
D227(E)	1	#4	9'-3"	[
D228(E)	1	#4	9'-5"	[
D229(E)	1	#4	9'-7"	[
D230(E)	1	#4	9'-9"	[
D231(E)	1	#4	9'-11"	[
D232(E)	1	#4	10'-1"	[
D233(E)	1	#4	10'-3"	[

BAR LIST
SOUTH RIGHT EXTERIOR BEAM
(For information only)

Bar	No.	Size	Length	Shape
S160(E)	14	#5	14'-0"	⊏
S161(E)	19	#5	20'-8"	⊏
S162(E)	1	#5	10'-2"	⊏
S163(E)	1	#5	10'-3"	⊏
S164(E)	1	#5	10'-4"	⊏
S165(E)	1	#5	10'-4"	⊏
S166(E)	1	#5	10'-5"	⊏
S167(E)	1	#5	10'-6"	⊏
S168(E)	1	#5	10'-6"	⊏
S169(E)	1	#5	10'-7"	⊏
S170(E)	1	#5	10'-8"	⊏
S171(E)	1	#5	10'-9"	⊏
S172(E)	1	#5	10'-9"	⊏
S173(E)	1	#5	10'-10"	⊏
S174(E)	1	#5	10'-11"	⊏
S175(E)	1	#5	11'-0"	⊏
S176(E)	1	#5	11'-0"	⊏
S177(E)	1	#5	11'-1"	⊏
S178(E)	1	#5	11'-2"	⊏
S179(E)	1	#5	11'-3"	⊏
S180(E)	1	#5	11'-3"	⊏
S181(E)	1	#5	11'-4"	⊏
S182(E)	1	#5	11'-5"	⊏
S183(E)	1	#5	11'-5"	⊏
S184(E)	1	#5	11'-6"	⊏
S185(E)	1	#5	11'-7"	⊏
S186(E)	1	#5	11'-8"	⊏
S187(E)	1	#5	11'-8"	⊏
S188(E)	1	#5	11'-9"	⊏
S189(E)	1	#5	11'-10"	⊏
S190(E)	1	#5	11'-11"	⊏
S191(E)	1	#5	11'-11"	⊏
S192(E)	1	#5	12'-0"	⊏
S193(E)	1	#5	12'-1"	⊏
S194(E)	1	#5	12'-2"	⊏
S195(E)	1	#5	12'-2"	⊏
S196(E)	1	#5	12'-3"	⊏
S197(E)	1	#5	12'-4"	⊏
S198(E)	1	#5	12'-4"	⊏
S199(E)	1	#5	12'-5"	⊏
S200(E)	1	#5	12'-6"	⊏
S201(E)	1	#5	12'-7"	⊏
S202(E)	1	#5	12'-7"	⊏
S203(E)	1	#5	12'-8"	⊏
S204(E)	1	#5	12'-9"	⊏
S205(E)	1	#5	12'-10"	⊏
S206(E)	1	#5	12'-10"	⊏
S207(E)	1	#5	12'-11"	⊏

MODEL: 032-BEAMDET EXTSK2
FILE NAME: G:\Users\11\11335-01-Waltron-Road-over-I57-Superstructure\Survey D366997\Consultant_Data\Chamlin_2020\CAD_Sheets\046153-66997-017-024_026-033-PCASTAPPSLAB.dgn
3/2/2021 3:06:21 PM

Chamlin & Associates

USER NAME =
PLOT SCALE =
PLOT DATE =

DESIGNED - JKC
CHECKED - AJO
DRAWN - LAG
CHECKED - JKC

REVISED -
REVISED -
REVISED -
REVISED -

STATE OF ILLINOIS
DEPARTMENT OF TRANSPORTATION

SOUTH PRECAST BRIDGE APPROACH SLAB
STRUCTURE NO. 046-0153
SHEET 32 OF 54 SHEETS

F.A.I. RTE.	SECTION	COUNTY	TOTAL SHEETS	SHEET NO.
57	139HBR-6	KANKAKEE	202	121
		CONTRACT NO. 66997		
	ILLINOIS	FED. AID PROJECT		

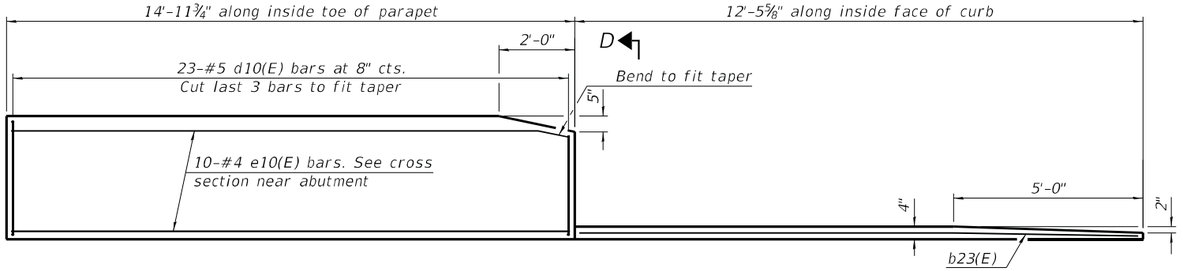

INSIDE ELEVATION OF EAST (LEFT) PARAPET AND CURB

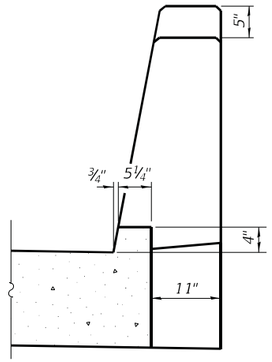

VIEW D-D

Notes:

The joint opening shall be adjusted for temperature per Article 520.04 of the Standard Specifications. However, since this detail is for jointless structures, the length of bridge used to calculate the adjustment shall be equal to half the total bridge length plus the length of the bridge approach slab.

After precast bridge approach slabs have been erected, holes shall be drilled into abutment and anchor dowels placed. Dowel holes shall be filled with non-shrink grout to top of precast slab and cured according to Article 1020.13(a)(3) or 1020.13(a)(5) of the Standard Specifications for a minimum of 24 hours before casting the shear keys and wearing surface.

Any concrete poured monolithically with the wearing surface, such as curbs, shall not be paid for separately, but will be included in the cost of Concrete Wearing Surface, 5".

The strip seal shall extend 6" beyond the edge of the approach slab on each end.

Parapet concrete shall be paid for as Concrete Superstructure.

Approach footing concrete shall be paid for as Concrete Structures.

The approach footing maximum applied service bearing pressure (Qmax) = 2.0 ksf.

Cost of excavation for approach footing included with Concrete Structures.

For Granular Backfill for Structures and drainage treatment details, see sheet 2 of .

Cost of cellular polystyrene is included with Concrete Superstructure.

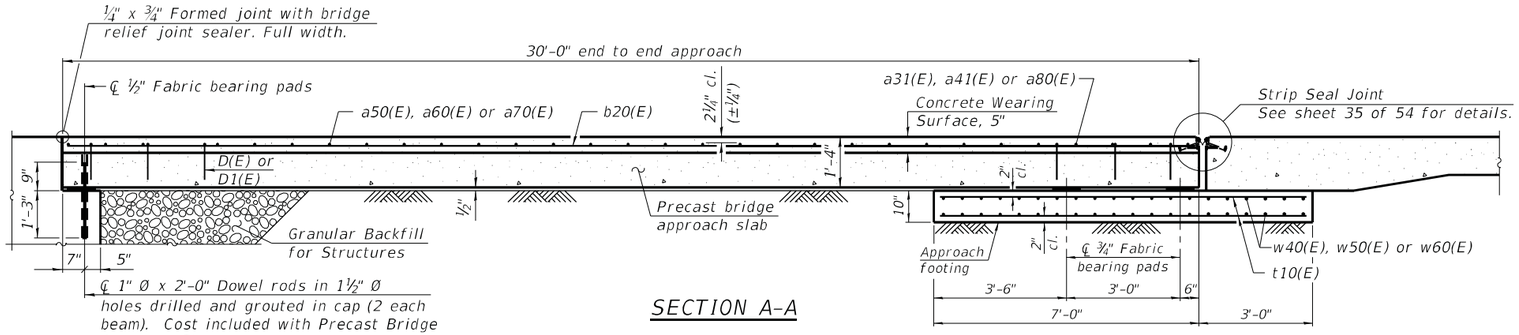

SECTION A-A

BILL OF MATERIAL

Bar	No.	Size	Length	Shape
a12(E)	28	#5	8'-2"	
a31(E)	16	#4	25'-0"	
a41(E)	8	#4	17'-9"	
a50(E)	20	#5	25'-0"	
a60(E)	10	#5	18'-10"	
a70(E)	10	#5	15'-5"	
a80(E)	8	#5	15'-11"	
b20(E)	44	#4	29'-5"	
b23(E)	1	#4	11'-10"	
b30(E)	1	#4	26'-11"	
b32(E)	4	#5	15'-11"	
b40(E)	1	#4	32'-2"	
b42(E)	4	#5	31'-10"	
d9(E)	49	#5	5'-3"	
d10(E)	72	#5	6'-5"	
d11(E)	23	#5	6'-5"	
d20(E)	49	#5	5'-0"	
d21(E)	49	#5	4'-9"	
e10(E)	22	#4	14'-9"	
e16(E)	4	#4	29'-9"	
e17(E)	12	#4	16'-0"	
e18(E)	4	#4	32'-0"	
e19(E)	10	#4	7'-4"	
t10(E)	92	#4	16'-6"	
t20(E)	2	#4	15'-1"	
t30(E)	2	#4	18'-0"	
w40(E)	80	#5	30'-0"	
w50(E)	40	#5	15'-3"	
w60(E)	40	#5	11'-7"	
Concrete Superstructure		Cu. Yd.	9.6	
Concrete Structures		Cu. Yd.	24.3	
Reinforcement Bars, Epoxy Coated		Pound	9370	
Precast Bridge Approach Slab		Sq. Ft.	1311	
Concrete Wearing Surface, 5"		Sq. Yd.	151	

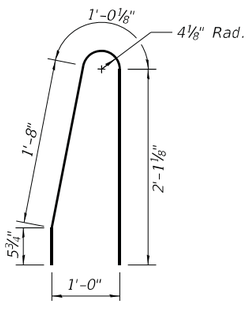

BAR d9(E)

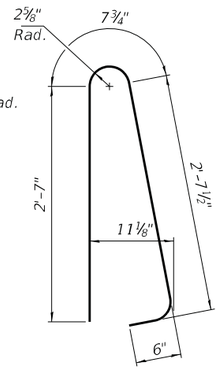

BAR d10(E)

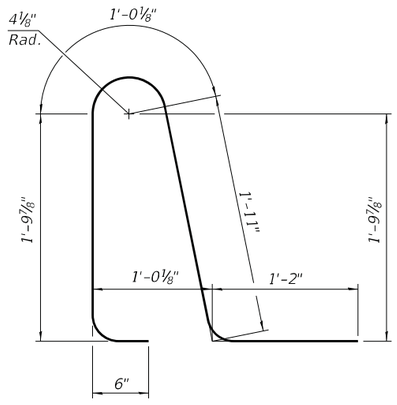

BAR d11(E)

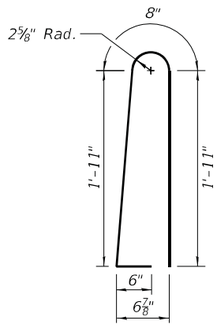

BAR d20(E)

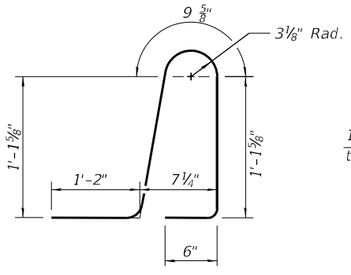

BAR d21(E)

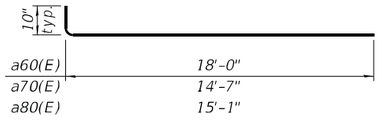

BAR a60(E), a70(E) or a80(E)

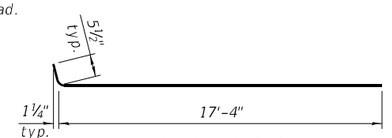

BAR a41(E)



BAR a12(E)

USER NAME =	DESIGNED - JKC	REVISED -	
	CHECKED - AJO	REVISED -	
PLOT SCALE =	DRAWN - LAG	REVISED -	
PLOT DATE =	CHECKED - JKC	REVISED -	

Chamlin & Associates

STATE OF ILLINOIS
DEPARTMENT OF TRANSPORTATION

SOUTH PRECAST BRIDGE APPROACH SLAB
STRUCTURE NO. 046-0153

SHEET 33 OF 54 SHEETS

F.A.I. RTE.	SECTION	COUNTY	TOTAL SHEETS	SHEET NO.
57	139HBR-6	KANKAKEE	202	122
		CONTRACT NO. 66997		
		ILLINOIS	FED. AID PROJECT	

MODEL: 033-SCURBS
FILE NAME: G:\Users\1111111335-01-Walkiron-Road-over-I57-Superstructure\Survey D3669997\Consultant_Data\Chamlin_2020\CAD_Sheets\0460153-66997-017-024_026-033-PCASTAPPSLAB.dgn

3/2/2021 3:07:47 PM

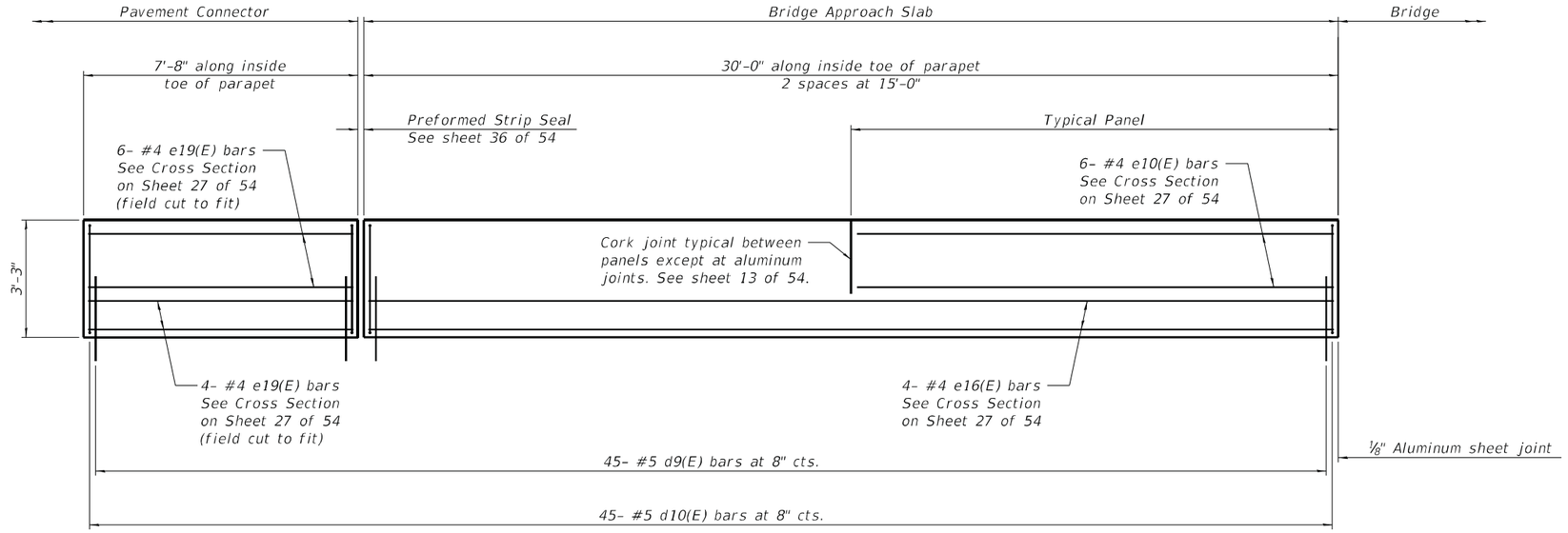

INSIDE ELEVATION OF WEST (RIGHT) PARAPET

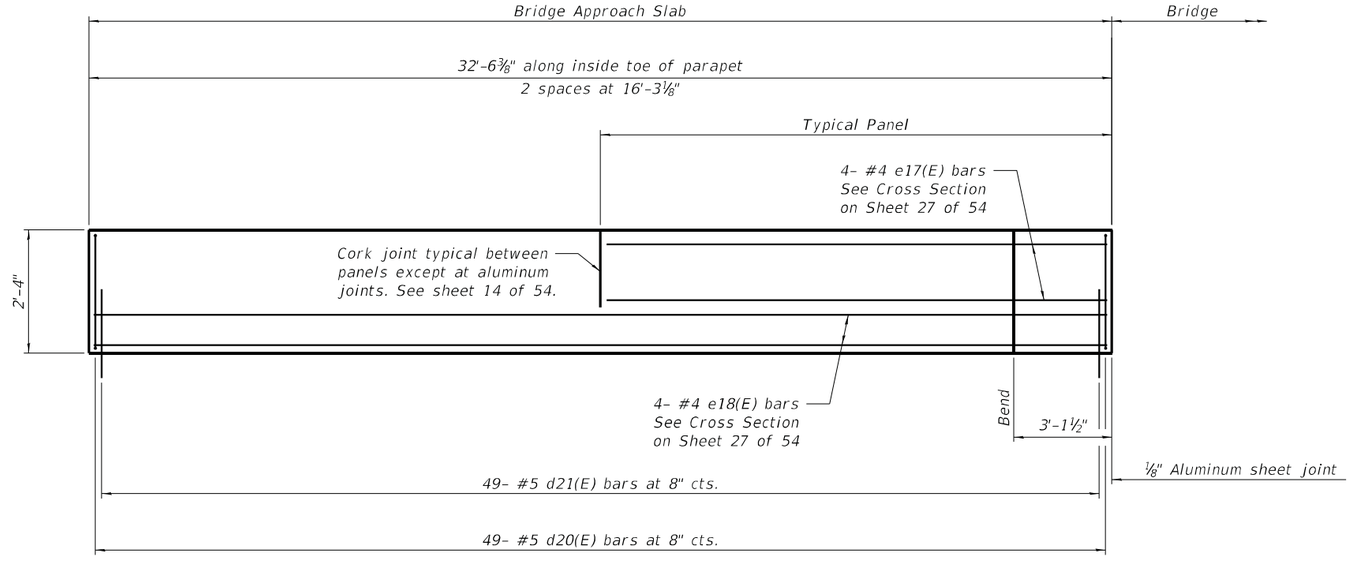

INSIDE ELEVATION OF SIDEWALK PARAPET

USER NAME =	DESIGNED - JKC	REVISED -	
	CHECKED - AJO	REVISED -	
PLOT SCALE =	DRAWN - LAG	REVISED -	
PLOT DATE =	CHECKED - JKC	REVISED -	

Chamlin & Associates

STATE OF ILLINOIS
DEPARTMENT OF TRANSPORTATION

SOUTH PRECAST BRIDGE APPROACH SLAB
STRUCTURE NO. 046-0153
SHEET 34 OF 54 SHEETS

F.A.I. RTE.	SECTION	COUNTY	TOTAL SHEETS	SHEET NO.
57	139HBR-6	KANKAKEE	202	123
		CONTRACT NO. 66997		
	ILLINOIS	FED. AID PROJECT		

MODEL: 034-SWPARAPET
FILE NAME: G:\Users\11\111335-01-Wallbron-Road-over-I57-Superstructure\Survey D366997\Consultant_Data\Chamlin_2020\CAD_Sheets\046015 3-66997-017-024_026-033-PCASTAPPSLAB.dgn

3/2/2021 3:08:18 PM

Notes:

The strip seal shall be made continuous and shall have a minimum thickness of ¼". The configuration of the strip seal shall match the configuration of the locking edge rails. Open or "webbed" strip seal gland configurations are not permitted. The gland shall be sized for a maximum rated movement of 4 inches.

The locking edge rails depicted are configured for typical applications and are conceptual only. The actual configuration of the locking edge rails and matching strip seal may vary from manufacturer to manufacturer provided they fit the application and meet the minimum anchorage shown. Flanged edge rails, however, will not be allowed. Locking edge rails may exceed the 4½" maximum depth provided the anchorage system is revised according to the manufacturer's recommendation.

The manufacturer's recommended installation methods shall be followed.

All steel components shall be galvanized after fabrication according to Article 520.03 of the Standard Specifications.

The Maximum space between locking edge rail segments shall be 3/16" and sealed with a suitable sealant; however, any rail joint within 10' measured perpendicular to the face of the curb or parapet shall be welded as shown in the locking edge rail splice detail.

The top surface of sidewalk sliding plates shall have a raised pattern according to ASTM A786.

Cost of parapet sliding plates, sidewalk sliding plates, embedded plates, anchorage studs, and expansion anchors included with Preformed Joint Strip Seal.

39" constant slope barrier shown, 44" constant slope barrier similar as noted.

The concrete opening below the strip seal will vary based on the locking edge rail chosen by the Contractor. Deck and parapet lengths shown elsewhere in the plans are dimensioned to the concrete opening, not the joint opening, and are based on the rolled locking edge rail. If the Contractor elects to use a different locking edge rail, dimensional adjustments may be required. One exception to this would be the strip seal joint at the end of the precast bridge approach slab. For these cases the pavement connector length shall be adjusted, not the length of the bridge approach slab.

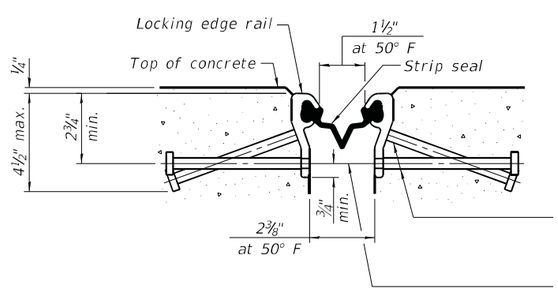

SHOWING ROLLED RAIL JOINT

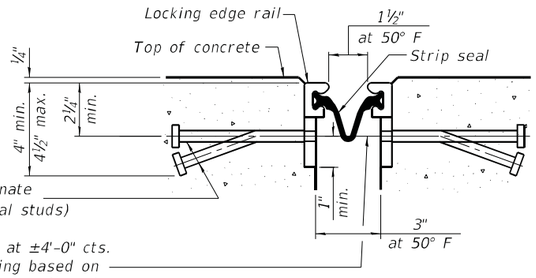

SHOWING WELDED RAIL JOINT

* ⅝" Ø x 6" studs @ 6" cts. (alternate angled/bent studs with horizontal studs)

⅝" ϕ threaded rods in 7/16" ϕ holes at ±4'-0" cts. for holding the proper joint opening based on the temperature during the deck pour. Place to miss studs. All rods shall be burned, or sawed off flush with the plates after concrete is set.

SECTION A-A

* Granular or solid flux filled headed studs conforming to Article 1006.32 of the Std. Specs., automatically end welded.

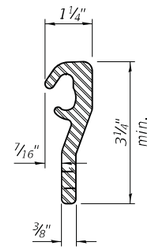

ROLLED (EXTRUDED) RAIL

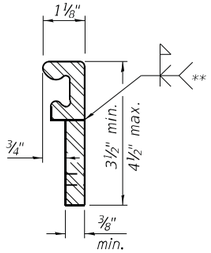

WELDED RAIL

LOCKING EDGE RAILS

** Back gouge not required if complete joint penetration is verified by mock-up.

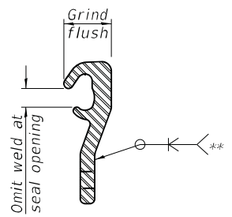

LOCKING EDGE RAIL SPLICE

The inside of the locking edge rail groove shall be free of weld residue. Rolled rail shown, welded rail similar.

BILL OF MATERIAL

Item	Unit	Total
Preformed Joint Strip Seal	Foot	158

Chamlin & Associates	USER NAME =	DESIGNED - JKC	REVISED -	STATE OF ILLINOIS DEPARTMENT OF TRANSPORTATION	PREFORMED JOINT STRIP SEAL - SIDEWALK STRUCTURE NO. 046-0153
		CHECKED - AJO	REVISED -		
	PLOT SCALE =	DRAWN - LAG	REVISED -		SHEET 35 OF 54 SHEETS
	PLOT DATE =	CHECKED - JKC	REVISED -		

F.A.I. RTE.	SECTION	COUNTY	TOTAL SHEETS	SHEET NO.
57	139HBR-6	KANKAKEE	202	124
		CONTRACT NO. 66997		
	ILLINOIS	FED. AID PROJECT		

MODEL: TEMP CONC BARRIER
FILE NAME: G:\Users\1111335-01-Waldron-Road-over-I57-Superstructure\Survey D366997\Consultant_Data\Chamlin_2020\CAD_Sheets\046O153-66997-035-036-STRIP_SEAL_JOINT.dgn
3/2/2021 3:09:33 PM

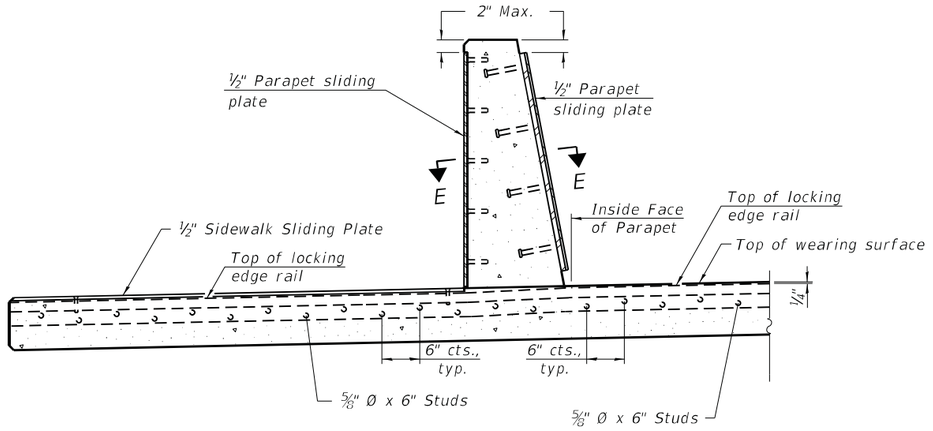

SECTION AT DECK LEVEL SIDEWALK

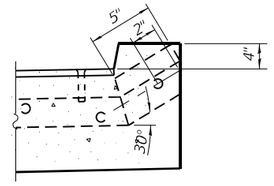

DETAIL B
AT APPROACH SLAB

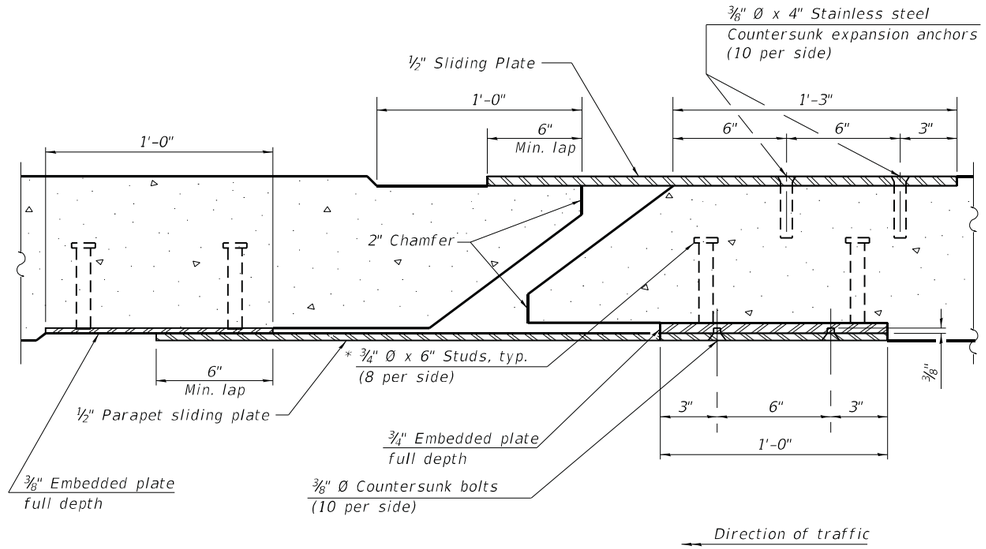

SECTION E-E

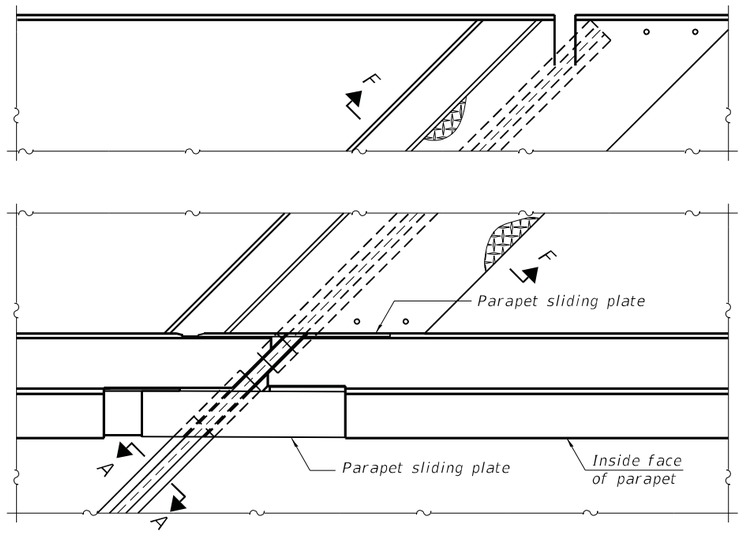

PLAN AT DECK LEVEL SIDEWALK

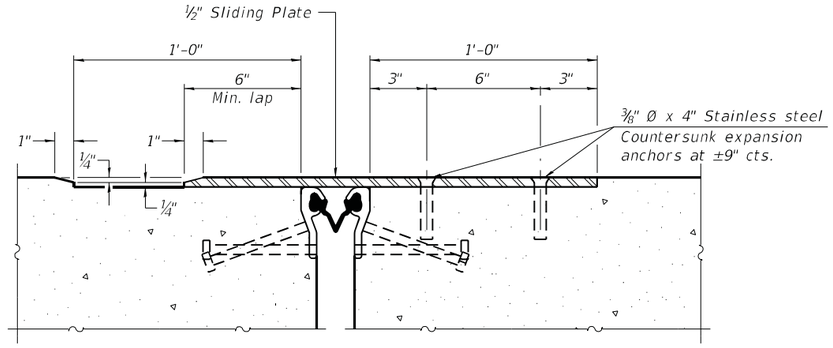

SECTION F-F

Note:
Parapet sliding plates are required at parapets separating roadway from sidewalk only.

Chamlin & Associates	USER NAME =	DESIGNED - JKC	REVISED -	STATE OF ILLINOIS DEPARTMENT OF TRANSPORTATION	PREFORMED JOINT STRIP SEAL - SIDEWALK STRUCTURE NO. 046-0153
		CHECKED - AJO	REVISED -		
	PLOT SCALE =	DRAWN - LAG	REVISED -		SHEET 36 OF 54 SHEETS
	PLOT DATE =	CHECKED - JKC	REVISED -		

F.A.I. RTE.	SECTION	COUNTY	TOTAL SHEETS	SHEET NO.
57	139HBR-6	KANKAKEE	202	125
		CONTRACT NO. 66997		
	ILLINOIS	FED. AID PROJECT		

MODEL: SHEET 3
FILE NAME: G:\Users\111\11335-01-Waltron-Road-over-I57-Superstructure\Survey D366997\Consultant_Data\Chamlin_2020\CAD_Sheets\046015 3-66997-035-036-STRIP_SEAL_JOINT.dgn
3/2/2021 3:15:48 PM

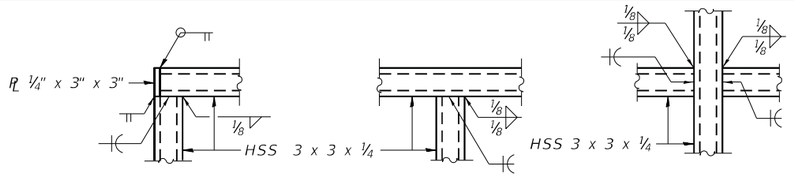

DETAIL A DETAIL B DETAIL C

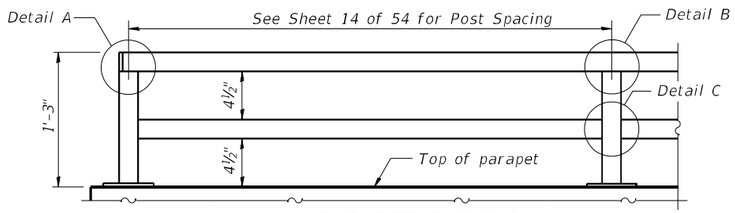

PARAPET RAILING
ELEVATION
(Inside Face of Two Element Rail)

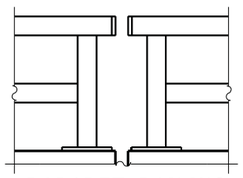

PARAPET RAILING
ELEVATION AT EXPANSION JOINT

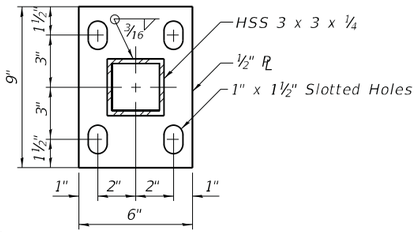

BASE ℄

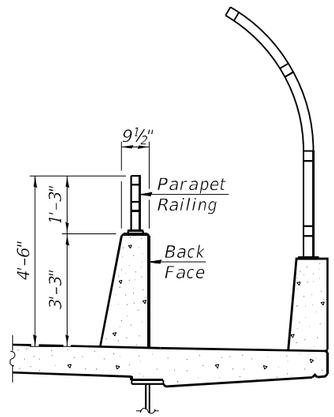

SECTION THRU DECK

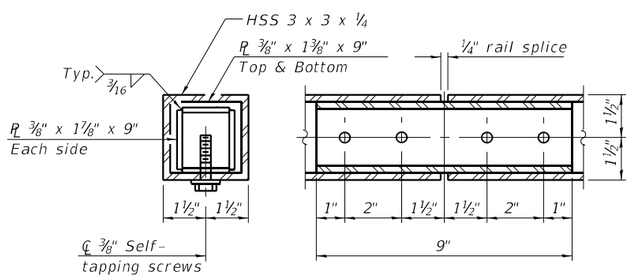

RAIL SPLICE

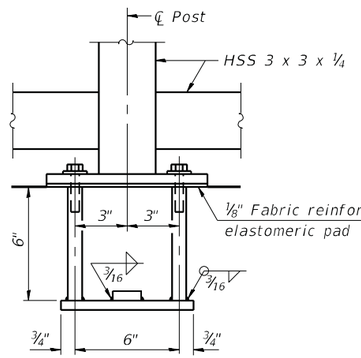

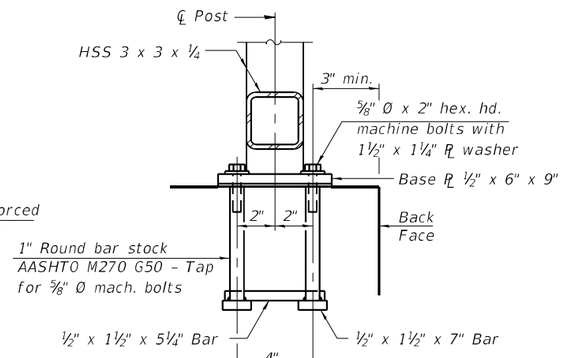

ANCHOR BOLT DETAILS

In lieu of the cast-in-place anchor device shown, the Contractor has the option of drilling and setting ⅝" Ø anchor rods according to Article 509.06 of the Standard Specifications. Embedment shall be according to the manufacturer's specifications.

Notes:
All structural steel tubing, post and railing, for parapet railing shall be CVN tested according to 1006.34(b) of the Standard Specifications.
All steel rail elements shall be galvanized according to Article 509.05 of the Standard Specifications.

BILL OF MATERIAL

Item	Unit	Quantity
Parapet Railing	Foot	334

Chamlin & Associates

USER NAME =	DESIGNED - JKC	REVISED -	
	CHECKED - AJO	REVISED -	
PLOT SCALE =	DRAWN - LAG	REVISED -	
PLOT DATE =	CHECKED - JKC	REVISED -	

STATE OF ILLINOIS
DEPARTMENT OF TRANSPORTATION

PARAPET RAILING
STRUCTURE NO. 046-0153
SHEET 37 OF 54 SHEETS

F.A.I. RTE.	SECTION	COUNTY	TOTAL SHEETS	SHEET NO.
57	139HBR-6	KANKAKEE	202	126
		CONTRACT NO. 66997		
ILLINOIS	FED. AID PROJECT			

MODEL: TEMP CONC BARRIER
FILE NAME: G:\Users\111\11335-01-Waldron-Road-over-I57-superstructure\Survey D366997\Consultant_Data\Chamlin_2020\CAD_Sheets\046015
3/2/2021 3:17:40 PM

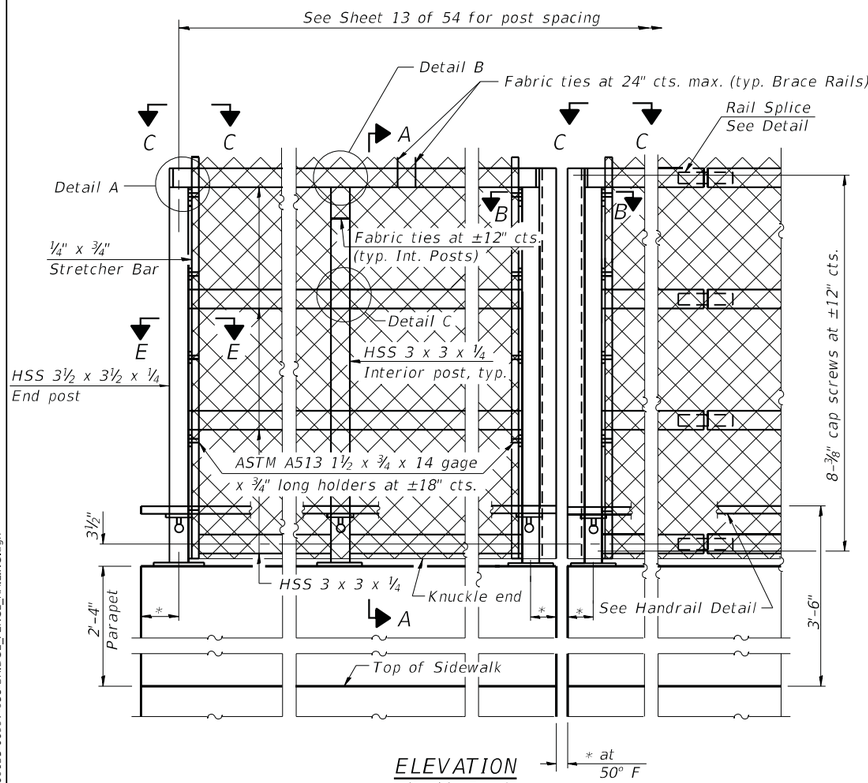

ELEVATION
(Inside Face)

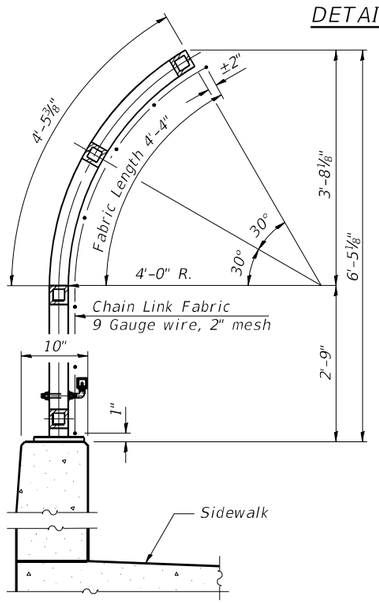

SECTION A-A

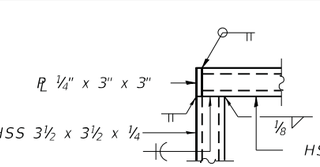

DETAIL A

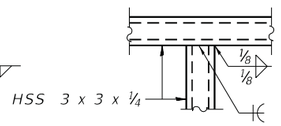

DETAIL B

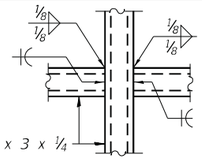

DETAIL C

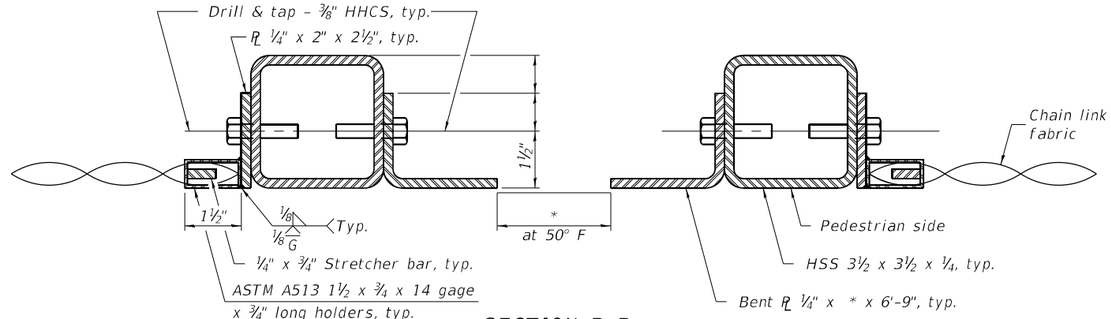

SECTION B-B
(At Expansion Joint)

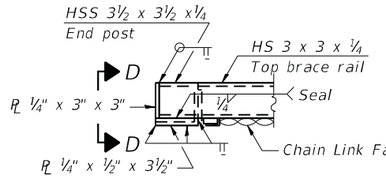

VIEW C-C

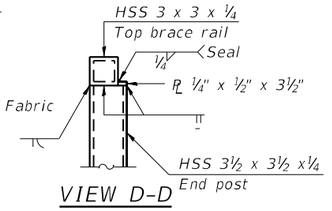

VIEW D-D

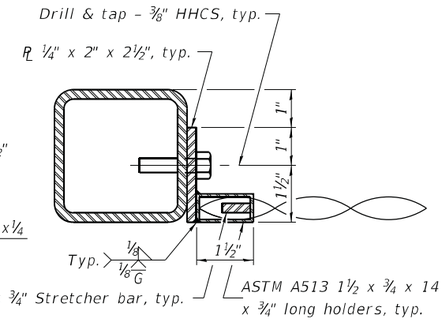

SECTION E-E

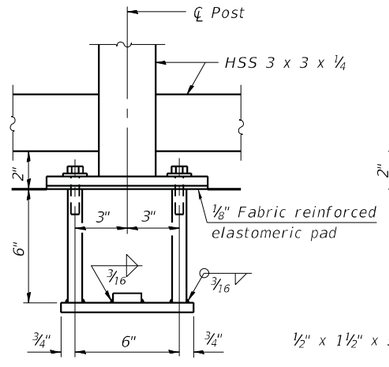

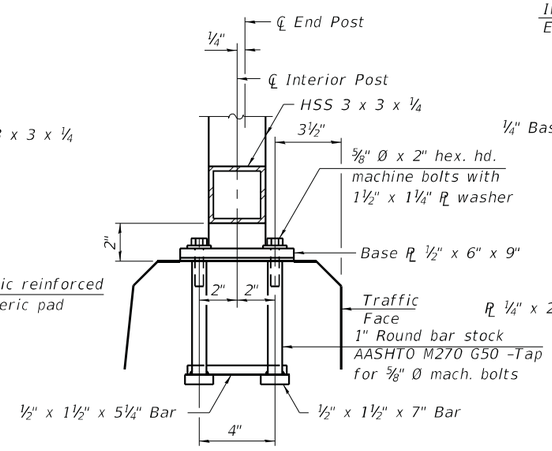

ANCHOR BOLT DETAILS

In lieu of the cast-in-place anchor device shown, the Contractor has the option of drilling and setting ⅝" Ø anchor rods according to Article 509.06 of the Standard Specifications. Embedment shall be according to the manufacturer's specifications.

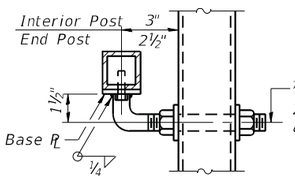

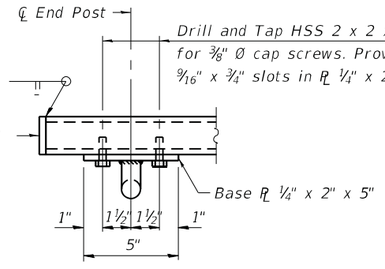

HANDRAIL DETAIL

Note:
CVN testing may be omitted for the railing.
All steel rail elements shall be galvanized according to Article 509.05 of the Standard Specifications.

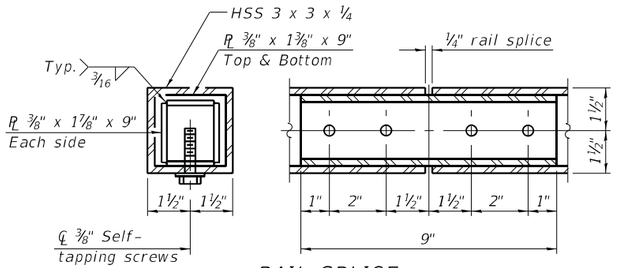

RAIL SPLICE

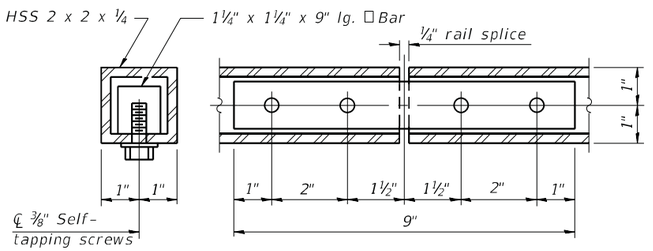

HANDRAIL SPLICE

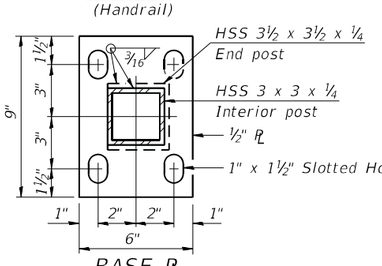

BASE PL
(Handrail)

BASE PL

BILL OF MATERIAL

Item	Unit	Quantity
Bridge Fence Railing	Foot	324

R-32

1-14-2019

USER NAME =	DESIGNED - JKC	REVISED -	
	CHECKED - AJO	REVISED -	
PLOT SCALE =	DRAWN - LAG	REVISED -	
PLOT DATE =	CHECKED - JKC	REVISED -	

Chamlin & Associates

STATE OF ILLINOIS
DEPARTMENT OF TRANSPORTATION

BRIDGE FENCE RAILING, PARAPET MOUNTED
STRUCTURE NO. 046-0153

SHEET 38 OF 54 SHEETS

F.A.I. RTE.	SECTION	COUNTY	TOTAL SHEETS	SHEET NO.
57	139HBR-6	KANKAKEE	202	127
		CONTRACT NO. 66997		
	ILLINOIS	FED. AID PROJECT		

MODEL: TEMP CONC BARRIER
FILE NAME: G:\Users\11\11335-01-Wallinon-Road-over-I57-Superstructure\Survey D366997\Consultant_Data\Chamlin_2020\CAD_Sheets\0460153-66997-038-BRIDGE_FENCE_RAILING.dgn

3/2/2021 3:18:35 PM

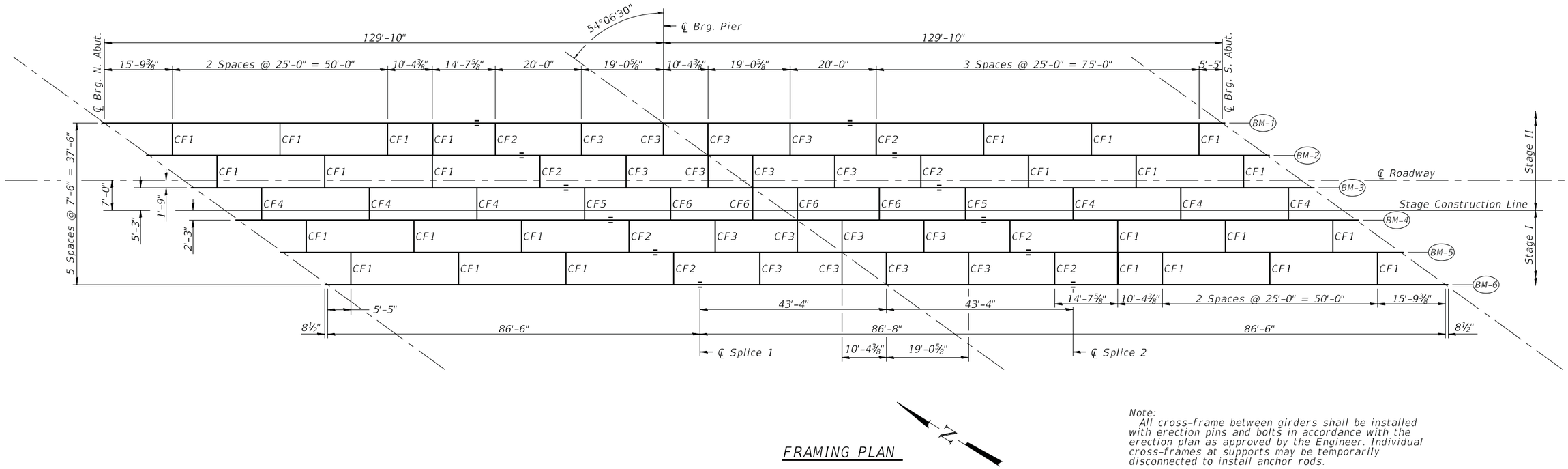

FRAMING PLAN

Note:
All cross-frame between girders shall be installed with erection pins and bolts in accordance with the erection plan as approved by the Engineer. Individual cross-frames at supports may be temporarily disconnected to install anchor rods.

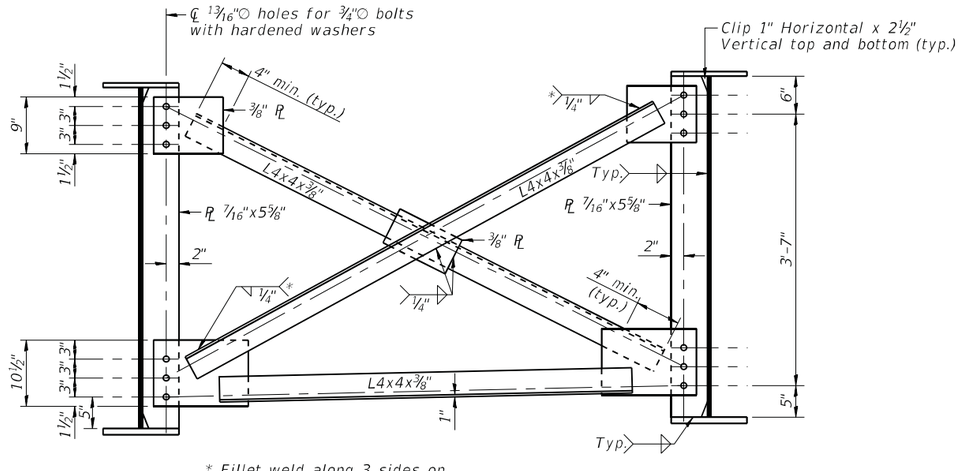

* Fillet weld along 3 sides on one face of gusset plate

CROSS FRAME CF1
(26 REQUIRED)

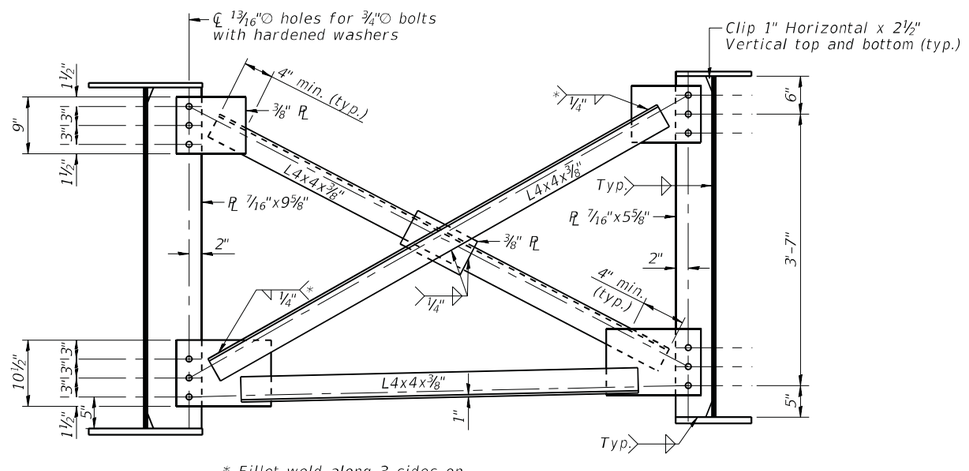

* Fillet weld along 3 sides on one face of gusset plate

CROSS FRAME CF2
(8 REQUIRED)

Chamlin & Associates	USER NAME = CHAMLIN	DESIGNED - JKC	REVISED -	**STATE OF ILLINOIS DEPARTMENT OF TRANSPORTATION**	**FRAMING PLAN AND DETAILS STRUCTURE NO. 046-0153**
		CHECKED - AJO	REVISED -		SHEET 39 OF 54 SHEETS
	PLOT SCALE = ____	DRAWN - ARR	REVISED -		
	PLOT DATE = ____	CHECKED - JKC	REVISED -		

F.A.I. RTE.	SECTION	COUNTY	TOTAL SHEETS	SHEET NO.
57	139HBR-6	KANKAKEE	202	128
		CONTRACT NO. 66997		
		ILLINOIS	FED. AID PROJECT	

MODEL: FRAMING PLAN
FILE NAME: G:\Users\1111111335-01-Waldron-Road-over-I57-Superstructure\Survey D366997\Consultant_Data\Chamlin_2020\CAD_Sheets\046015S-66997-039-040-FRAMING.dgn
3/3/2021 9:16:03 AM

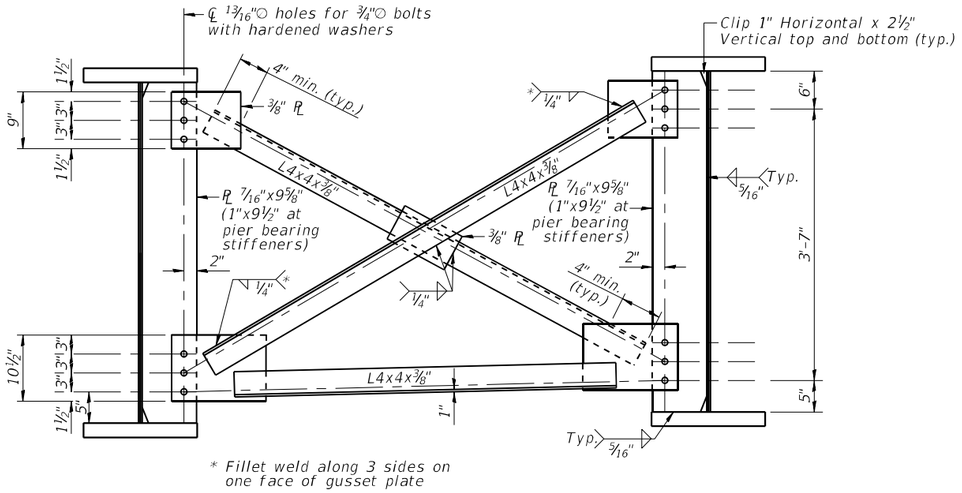

CROSS FRAME CF3
(16 REQUIRED)

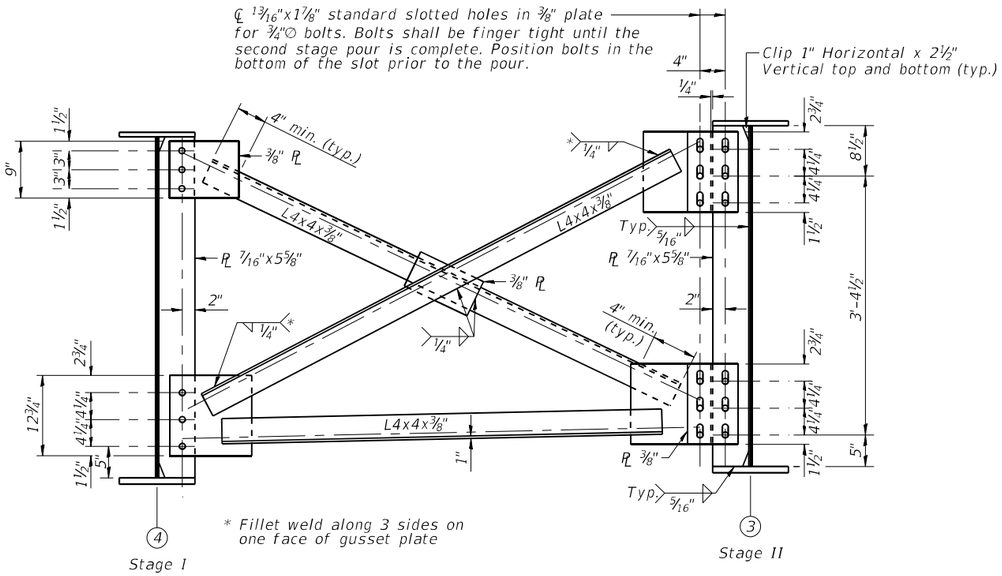

CROSS FRAME CF4
(6 REQUIRED)

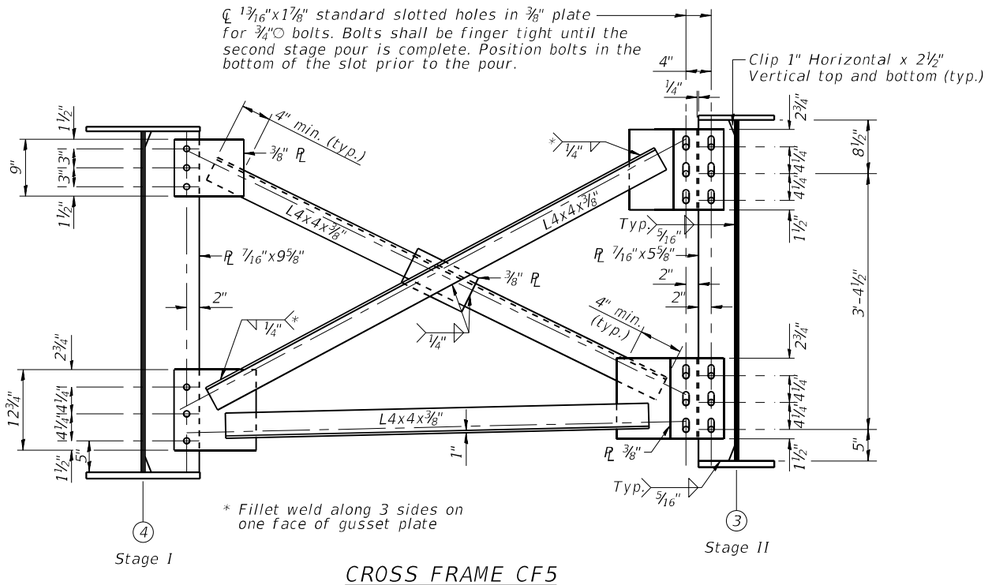

CROSS FRAME CF5
(2 REQUIRED)

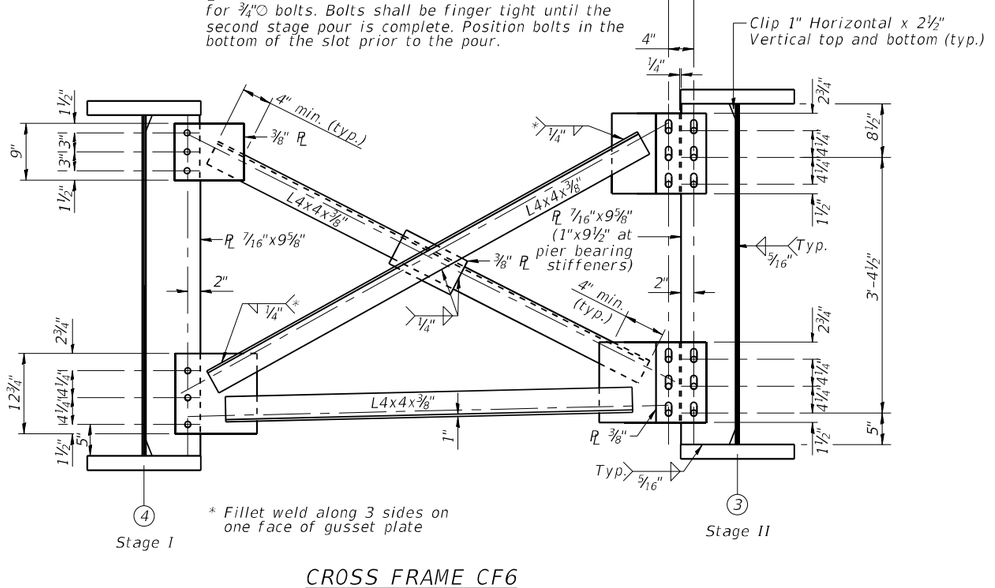

CROSS FRAME CF6
(4 REQUIRED)

MODEL: FRAMING PLAN
FILE NAME: G:\Users\11\111335-01-Waldron-Road-over-I57-Superstructure\Survey D366997\Consultant_Data\Chamlin_2020\CAD_Sheets\046015\3-66997-039-040-FRAMING.dgn

4/27/2021 3:05:22 PM

Chamlin & Associates

USER NAME = CHAMLIN	DESIGNED - JKC	REVISED -	
	CHECKED - AJO	REVISED -	
PLOT SCALE =	DRAWN - ARR	REVISED -	
PLOT DATE =	CHECKED - JKC	REVISED -	

STATE OF ILLINOIS
DEPARTMENT OF TRANSPORTATION

FRAMING PLAN AND DETAILS
STRUCTURE NO. 046-0153
SHEET 40 OF 54 SHEETS

F.A.I. RTE.	SECTION	COUNTY	TOTAL SHEETS	SHEET NO.
57	139HBR-6	KANKAKEE	202	129
		CONTRACT NO. 66997		
		ILLINOIS	FED. AID PROJECT	

TOP OF WEB ELEVATIONS (FOR FABRICATION ONLY)

LOCATION / BEAM	BM-1	BM-2	BM-3	BM-4	BM-5	BM-6
Centerline Brg. n. Abut.	658.12	658.32	658.43	658.29	658.14	657.98
Centerline Splice #1	658.12	658.20	658.19	657.93	657.67	657.38
Centerline Brg. Pier	657.59	657.61	657.54	657.22	656.90	656.56
Centerline Splice #2	657.06	657.02	656.89	656.52	656.13	655.73
Centerline Brg. S Abut.	654.94	654.78	654.53	654.04	653.54	653.02

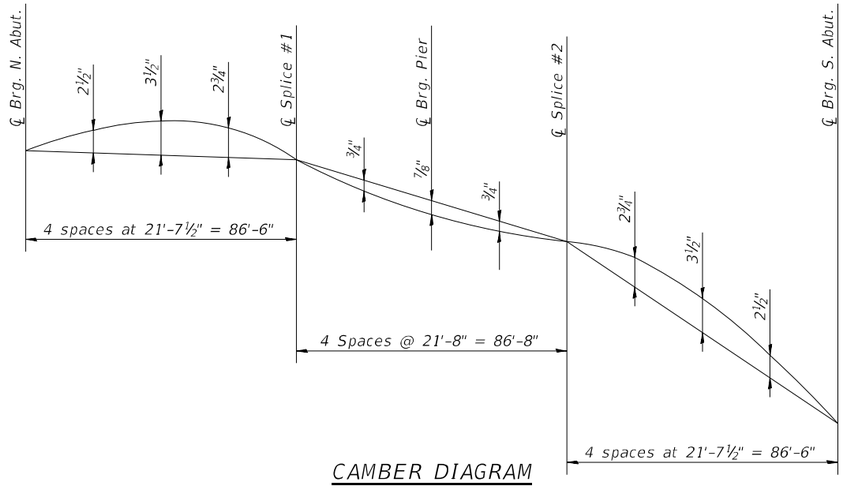

CAMBER DIAGRAM

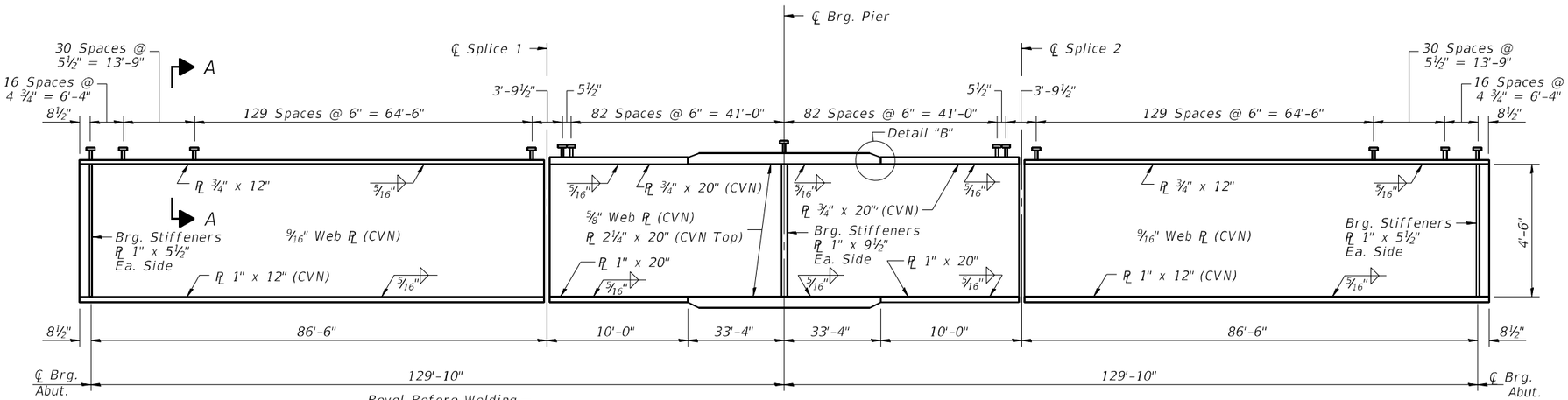

GIRDER ELEVATION

"CVN" denotes Charpy-V-Notch impact energy requirements, zone 2.

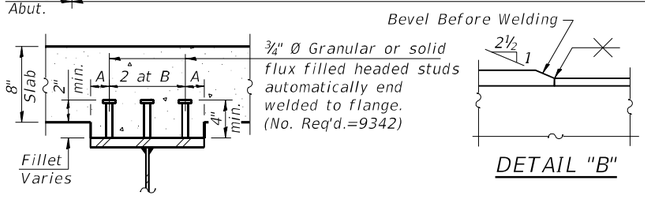

SECTION A-A

A = 2" at 12" Flange or 4" at 20" flange
B = 4" at 12" flange or 6" at 20" flange

DETAIL "B"

Note:
All flange plates, web plates, splice plates, and bearing stiffeners shall be AASHTO M270 Gr 50 Steel.

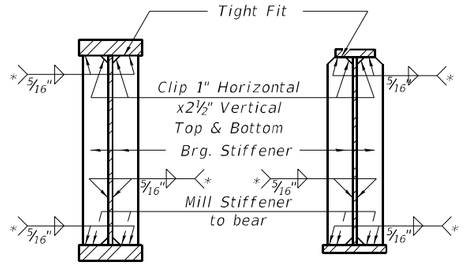

SECTION AT PIER

SECTION AT ABUTMENT

* Terminate ¼" (±⅛") from the end of plate intersects.

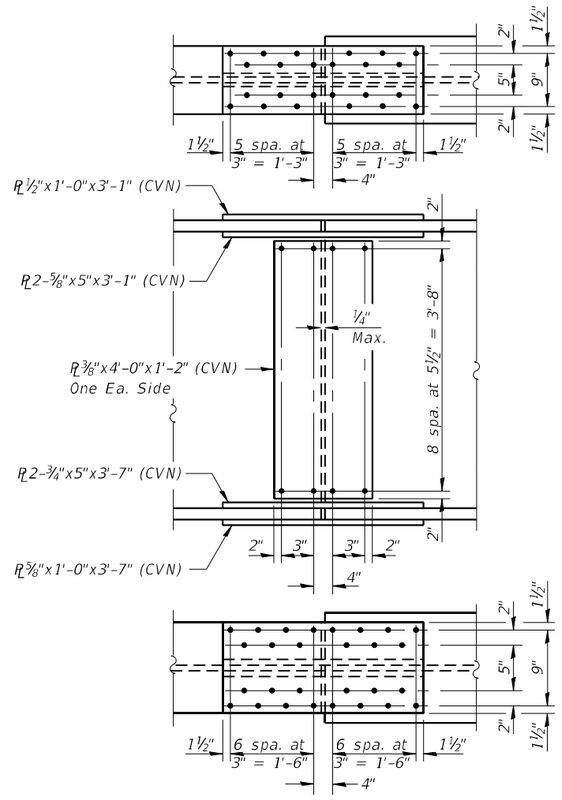

FIELD SPLICE DETAIL

(Splices 1 and 2)

USER NAME =	DESIGNED - JKC	REVISED -	STATE OF ILLINOIS DEPARTMENT OF TRANSPORTATION	GIRDER AND FRAMING DETAILS STRUCTURE NO. 046-0153
	CHECKED - AJO	REVISED -		SHEET 41 OF 54 SHEETS
PLOT SCALE =	DRAWN - LAG	REVISED -		
PLOT DATE =	CHECKED - JKC	REVISED -		

Chamlin & Associates

F.A.I. RTE.	SECTION	COUNTY	TOTAL SHEETS	SHEET NO.
57	139HBR-6	KANKAKEE	202	130
		CONTRACT NO. 66997		
	ILLINOIS FED. AID PROJECT			

MODEL: TEMP CONC BARRIER
FILE NAME: G:\Users.11\11335-01-Waltron-Road-over-I57-Superstructure\Survey D3669997\Consultant_Data\Chamlin_2020\CAD_Sheets\0460153-66997-041-STRUCTURAL_STEEL.dgn

4/19/2021 10:44:44 AM

INTERIOR GIRDER MOMENT TABLE			
		0.4 Sp. 1 or 0.6 Sp. 2	Pier
Is	(in^4)	23065.9	79430.6
Ic(n)	(in^4)	63658.0	--
Ic(3n)	(in^4)	47141.9	--
Ic(cr)	(in^4)	--	87286.2
Ss	(in^3)	874.6	2715.6
Sc(n)	(in^3)	1296.9	--
Sc(3n)	(in^3)	1180.7	--
Sc(cr)	(in^3)	--	2798.5
Sxc	(in^3)	1180.7	--
DC1	(k/')	1.008	1.008
MDC1	('k)	849.4	2974.4
DC2	(k/')	0.233	0.233
MDC2	('k)	222.6	623.3
DW	(k/')	0.340	0.340
MDW	('k)	326.0	912.7
LLDF	('k)	0.553	0.599
M_{L+IM}	('k)	1683.3	2519.5
fl (Strength I)	('k)	10.0	10.0
Mu + $^1/_3$fl Sxc	('k)	5102.7	--
Øf Mn	('k)	6259.0	--
fs DC1	(ksi)	11.65	13.14
fs DC2	(ksi)	2.26	2.67
fs DW	(ksi)	3.31	3.91
fs (L+IM)	(ksi)	15.58	10.80
fl (Service II)	(ksi)	10.00	10.00
fs+ $^{fl}/_2$ (Service II)	(ksi)	42.48	38.77
0.95Rh Fyf	(ksi)	47.50	47.50
fs + $^{fl}/_3$ (Total)(Strength I)	(ksi)	--	47.88
Øf Fn	(ksi)	--	50.00
Vf	(k)	95.8	--

GIRDER REACTION TABLE					
		Abut.		Pier	
		Interior	Exterior	Interior	Exterior
LLDF		0.779	0.903	0.779	0.695
OCF		--	1.300	--	1.000
RDC1	(k)	42.5	40.1	176.8	166.8
RDC2	(k)	10.3	10.3	39.8	40.0
RDW	(k)	15.1	15.1	58.4	58.4
R_L	(k)	78.02	90.44	167.95	149.78
R_{IM}	(k)	16.74	19.40	30.17	26.91
RTotal	(k)	162.66	175.34	473.12	441.89

Is, Ss: Non-composite moment of inertia and section modulus of the steel section used for computing fs(Total-Strength I, and Service II) due to non-composite dead loads ($in.^4$ and $in.^3$).

Ic(n), Sc(n): Composite moment of inertia and section modulus of the steel and deck based upon the modular ratio, "n", used for computing fs(Total-Strength I, and Service II) in uncracked sections due to short-term composite live loads ($in.^4$ and $in.^3$).

Ic(3n), Sc(3n): Composite moment of inertia and section modulus of the steel and deck based upon 3 times the modular ratio, "3n", used for computing fs(Total-Strength I, and Service II) in uncracked sections, due to long-term composite (superimposed) dead loads ($in.^4$ and $in.^3$).

Ic(cr), Sc(cr): Composite moment of inertia and section modulus of the steel and longitudinal deck reinforcement, used for computing fs (Total-Strength I and Service II) in cracked sections, due to both short-term composite live loads and long-term composite (superimposed) dead loads ($in.^4$ and $in.^3$).

DC1: Un-factored non-composite dead load (kips/ft.).

MDC1: Un-factored moment due to non-composite dead load (kip-ft.).

DC2: Un-factored long-term composite (superimposed excluding future wearing surface) dead load (kips/ft.).

MDC2: Un-factored moment due to long-term composite (superimposed excluding future wearing surface) dead load (kip-ft.).

DW: Un-factored long-term composite (superimposed future wearing surface only) dead load (kips/ft.).

MDW: Un-factored moment due to long-term composite (superimposed future wearing surface only) dead load (kip-ft.).

M_{L+IM}: Un-factored live load moment plus dynamic load allowance (impact) (kip-ft.).

Mu (Strength I): Factored design moment (kip-ft.).
1.25 (MDC1 + MDC2) + 1.5 MDW + 1.75 M_{L+IM}

Øf Mn: Compact composite positive moment capacity computed according to Article 6.10.7.1 or non-slender negative moment capacity according to Article A6.1.1 or A6.1.2 (kip-ft).

fs DC1: Un-factored stress at edge of flange for controlling steel flange due to vertical non-composite dead loads as calculated below (ksi).
MDC1/ Snc

fs DC2: Un-factored stress at edge of flange for controlling steel flange due to vertical composite dead loads as calculated below (ksi).
MDC2/ Sc(3n) or MDC2/ Sc(cr) as applicable.

fs DW: Un-factored stress at edge of flange for controlling steel flange due to vertical composite future wearing surface loads as calculated below (ksi).
MDW/ Sc(3n) or MDW/ Sc(cr) as applicable.

fs (L+IM): Un-factored stress at edge of flange for controlling steel flange due to vertical composite live load plus impact loads as calculated below (ksi).
M_{L+IM} / Sc(n) or M_{L+IM} / Sc(cr) as applicable.

fs + $^{fl}/_2$ (Service II): Sum of stresses as computed below (ksi).
fsDC1 + fsDC2 + fsDW + 1.3 fs($L+IM$) + $^{fl}/_2$

0.95RhFyf: Composite stress capacity for Service II loading according to Article 6.10.4.2 (ksi).

fs + $^{fl}/_3$ (Total)(Strength I): Sum of stresses as computed below on non-compact section (ksi).
1.25 (fsDC1 + fsDC2) + 1.5 fsDW + 1.75 fs($L+IM$) + $^{fl}/_3$

Øf Fn: Non-Compact composite positive or negative stress capacity for Strength I loading according to Article 6.10.7 or 6.10.8 (ksi).

Vf: Maximum factored shear range in span computed according to Article 6.10.10.

Note:
M_L and R_L include the effects of centrifugal force and superelevation.

OCF: Obtuse Correction factor

LLDF: Live Load Distribution Factor (Includes OCF)

Sxc: Section modulus about the major axis of section to the controlling flange, tension or compression, taken as yield moment with respect to the controlling flange over the yield strength of the controlling flange ($in.^3$)

MODEL: TEMP CONC BARRIER
FILE NAME: G:\Users\11\11335-01-Wal\Iron-Road-over-I57-Superstructure\Survey D3669997\Consultant_Data\Chamlin_2020\CAD_Sheets\0460153-66997-042-INTERIOR_GIRDER_TABLES.dgn
3/3/2021 9:17:26 AM

Chamlin & Associates

USER NAME =	DESIGNED - JKC	REVISED -	
	CHECKED - AJO	REVISED -	
PLOT SCALE =	DRAWN - LAG	REVISED -	
PLOT DATE =	CHECKED - JKC	REVISED -	

STATE OF ILLINOIS
DEPARTMENT OF TRANSPORTATION

GIRDER AND FRAMING DETAILS
STRUCTURE NO. 046-0153
SHEET 42 OF 54 SHEETS

F.A.I. RTE.	SECTION	COUNTY	TOTAL SHEETS	SHEET NO.
57	139HBR-6	KANKAKEE	202	131
		CONTRACT NO. 66997		
	ILLINOIS FED. AID PROJECT			

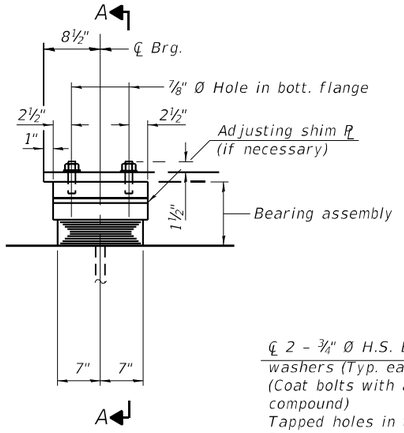

ELEVATION AT ABUT.

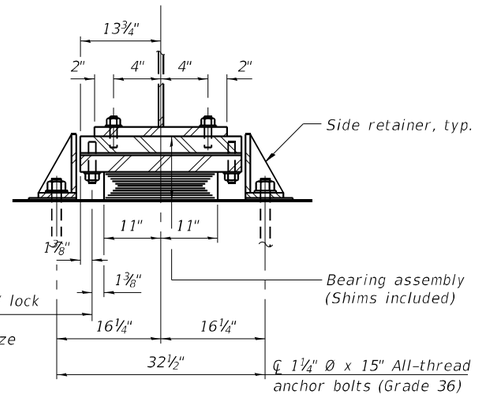

SECTION A-A

TYPE I ELASTOMERIC EXP. BRG.

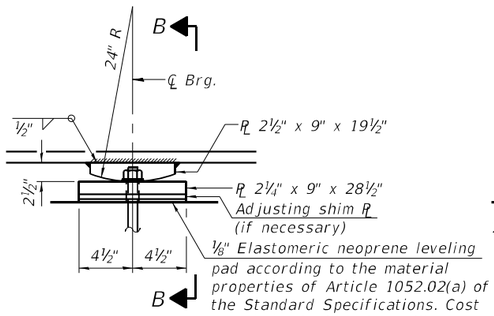

ELEVATION AT PIER

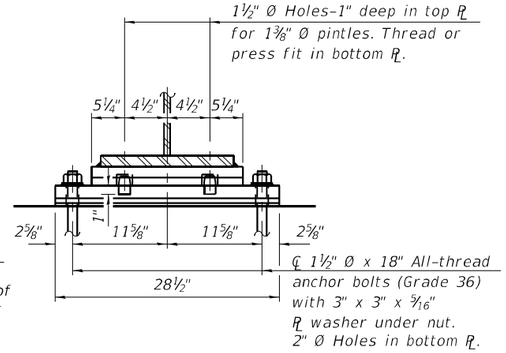

SECTION B-B

FIXED BEARING

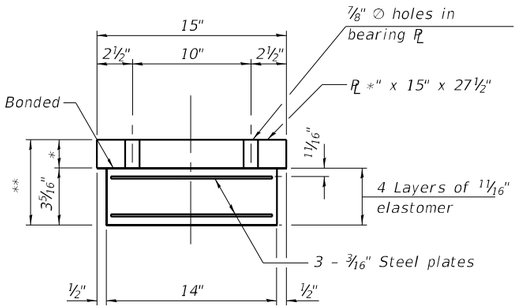

BEARING ASSEMBLY

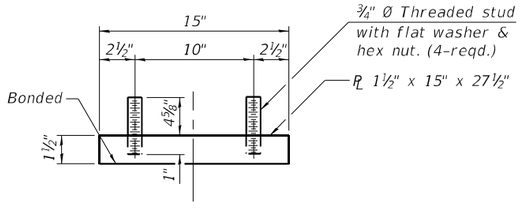

TOP PLATE

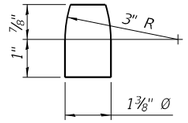

PINTLE
(Grade 50)

* 2½" at North Abutment
Varies 2½" to 3" at South Abutment

** Varies 5 13/16" at edge away from span

Note:
Shim plates shall not be placed under bearing assembly.

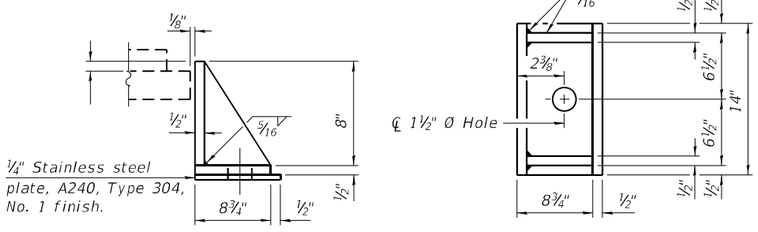

SIDE RETAINER
Equivalent rolled angle with stiffeners will be allowed in lieu of welded plates.

Notes:
Side retainers and stainless steel plates shall be included in the cost of Elastomeric Bearing Assembly, Type I.

Anchor bolts and side retainers at all supports shall be installed as each member is erected unless an equivalent temporary means of lateral restraint is used.

The Structural Steel Plates of the Fixed bearing and Elastomeric Bearing Assembly shall conform to the requirements of AASHTO M270 Grade 50.

Two ⅛ in. adjusting shims shall be provided for each bearing in addition to all other plates or shims and placed as shown on the bearing details.

BILL OF MATERIAL

Item	Unit	Total
Elastomeric Bearing Assembly Type I	Each	12
Anchor Bolts 1¼"	Each	24
Anchor Bolts 1½"	Each	12

MODEL: TEMP CONC BARRIER
FILE NAME: G:\Users\11111335-01-Waltron-Road-over-I57-SuperstructureISurvey D366997\Consultant_Data\Chamlin_2020\CAD_Sheets\0460153-66997-043-BEARING_DETAILS.dgn
8/12/2021 9:51:06 AM

Chamlin & Associates

USER NAME =	DESIGNED - JKC	REVISED -
	CHECKED - AJO	REVISED -
PLOT SCALE =	DRAWN - LAG	REVISED -
PLOT DATE =	CHECKED - JKC	REVISED -

STATE OF ILLINOIS
DEPARTMENT OF TRANSPORTATION

BEARING DETAILS
STRUCTURE NO. 046-0153
SHEET 43 OF 54 SHEETS

F.A.I. RTE.	SECTION	COUNTY	TOTAL SHEETS	SHEET NO.
57	139HBR-6	KANKAKEE	202	132
		CONTRACT NO. 66997		
	ILLINOIS FED. AID PROJECT			

Note 1.
5-#5 h1(E) bars, short face (E)
5-#5 h2(E) bars, long face (E)
4-#5 h1(E) bars, short face (W)
4-#5 h2(E) bars, long face (W)

Note 2.
1-#5 h6(E) bars, short face (E)
1-#5 h7(E) bars, long face (E)
1-#5 h8(E) bars, short face (W)
1-#5 h9(E) bars, long face (W)
(cut to fit)

Note 3.
1-#5 h3(E) bar, short face (E)
1-#5 h4(E) bar, long face (E)
2-#5 h5(E) bars (W)
at 12" cts. each face
(See field cutting diagram)

Note 4.
Order 5-p(E), 1-p1(E), 1-p2(E), 1-p3(E), 1-p4(E), 5-p5(E) bars for each stage and cut to fit for Stage II.

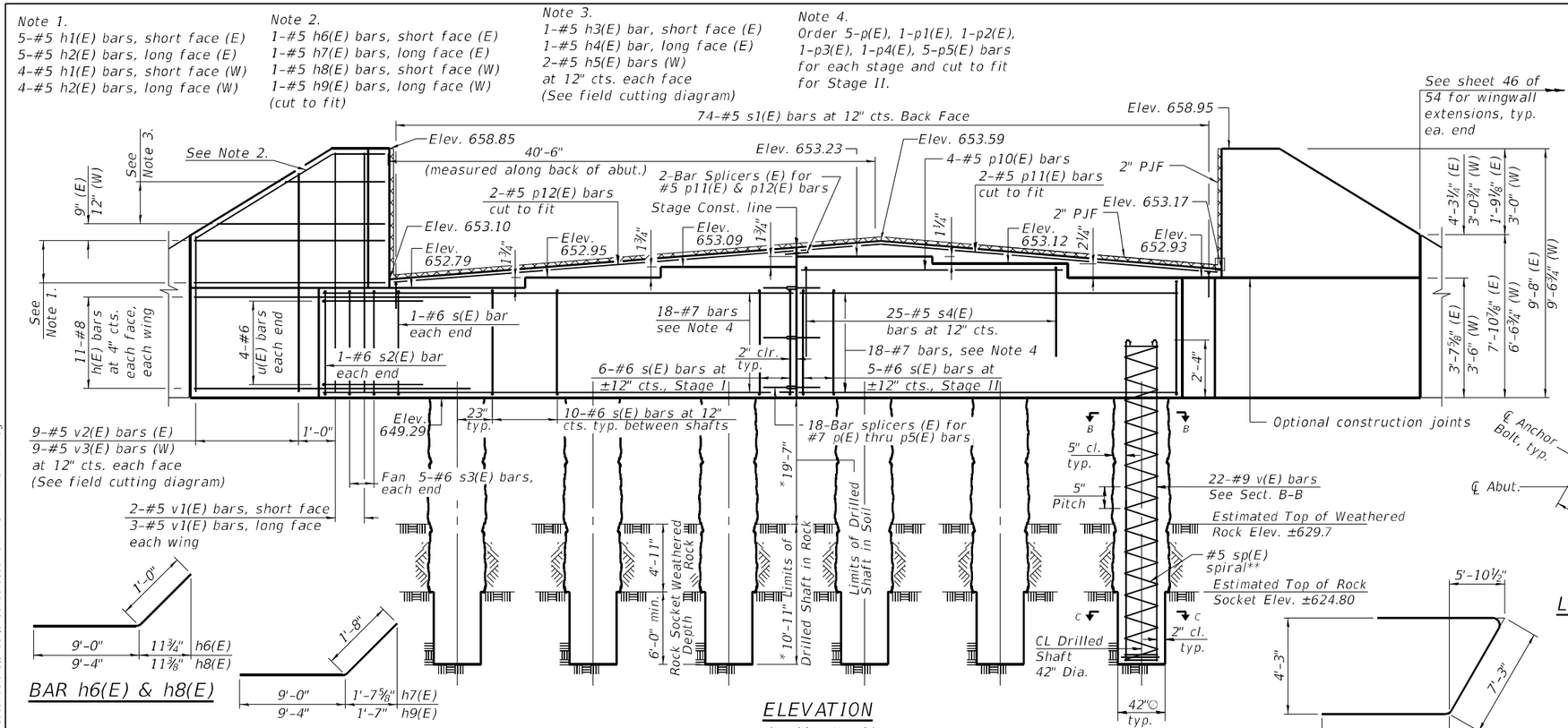

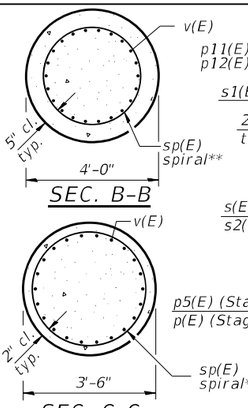

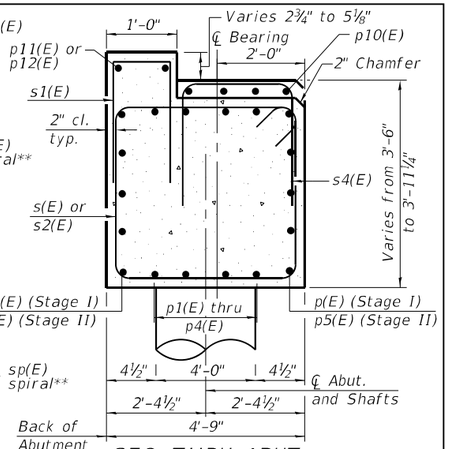

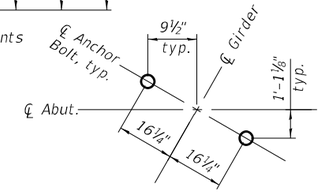

ANCHOR BOLT LOCATION DETAIL

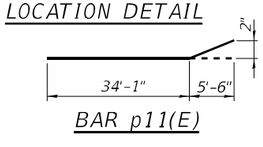

BAR p11(E)

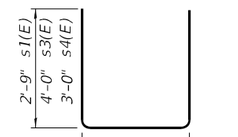

BAR s1(E), s3(E) & s4(E)

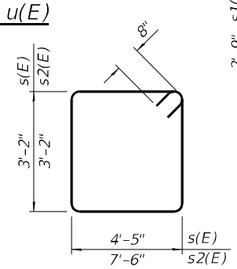

BAR s(E) & s2(E)

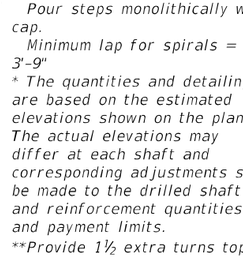

BAR v(E)

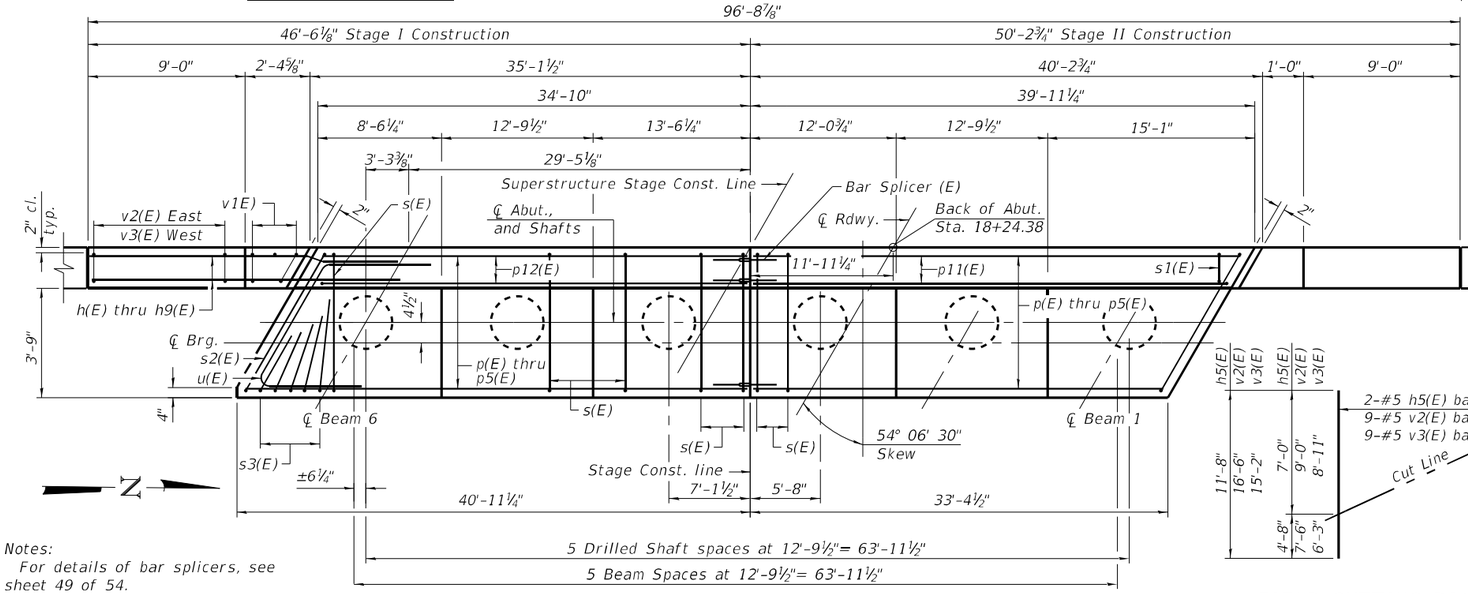

FIELD CUTTING DIAGRAM
Order bars full length. Cut as shown and use remainder of bars in opposite face.

MINIMUM BAR LAP
#5 bar = 3'-7"
#7 bar = 5'-0"

Notes:
For details of bar splicers, see sheet 49 of 54.
Headed bars shall conform to ASTM A970 with threaded attachment; Class HA; and reinforcement bars conforming to ASTM A706. Cost included with Reinforcement Bars, Epoxy Coated.

Space reinforcement in cap to miss anchor bolts.
Pour steps monolithically with cap.
Minimum lap for spirals = 3'-9"
* The quantities and detailing are based on the estimated elevations shown on the plans. The actual elevations may differ at each shaft and corresponding adjustments shall be made to the drilled shaft and reinforcement quantities and payment limits.
**Provide 1½ extra turns top and bottom of each drilled shaft. Extend spiral 2'-0" into abutment cap. Provide min. 4-#4 spacers or equivalent.
***Length is height of spiral.

BILL OF MATERIAL

Bar	No.	Size	Length	Shape
h(E)	22	#8	16'-11"	
h1(E)	9	#5	9'-10"	
h2(E)	9	#5	10'-6"	
h3(E)	1	#5	6'-2"	
h4(E)	1	#5	6'-10"	
h5(E)	2	#5	11'-8"	
h6(E)	1	#5	10'-0"	
h7(E)	1	#5	10'-8"	
h8(E)	1	#5	10'-4"	
h9(E)	1	#5	11'-0"	
p(E)	10	#7	40'-7"	
p1(E)	4	#7	39'-6"	
p2(E)	4	#7	38'-3"	
p3(E)	4	#7	37'-1"	
p4(E)	4	#7	35'-11"	
p5(E)	10	#7	34'-7"	
p10(E)	4	#5	24'-6"	
p11(E)	2	#5	39'-7"	
p12(E)	2	#5	35'-4"	
s(E)	53	#6	16'-6"	
s1(E)	74	#5	6'-2"	
s2(E)	2	#6	22'-8"	
s3(E)	10	#6	11'-2"	
s4(E)	25	#5	9'-5"	
***sp(E)	6	#5	32'-6"	
u(E)	8	#6	15'-11"	
v(E)	132	#9	33'-11"	
v1(E)	10	#5	9'-2"	
v2(E)	9	#5	16'-6"	
v3(E)	9	#5	15'-2"	
Structure Excavation		Cu. Yd.	314	
Concrete Structures		Cu. Yd.	56.8	
Reinforcement Bars, Epoxy Coated		Pound	27,330	
Drilled shaft in soil		Cu. Yd.	54.7	
Drilled shaft in rock		Cu. Yd.	26.6	
Granular backfill for Structures		Cu. Yd.	197	
Thermal Integrity Profile Testing		Each	6	
Thermal Integrity Profile Data Collection		Foot	183	
Pipe Underdrain for Structures 4"		Foot	96	
Geocomp. Wall Drain		Sq. Yd.	90	

MODEL: 046O153-66997-044
FILE NAME: I:\jobs\2019\193.1901 PTB 192-011 District 3 Various Phase III Structure Projects\WO 2 - Waldron Road over I-57\Drawings\bridge substructure\Sheet\0460153-66997-044-NORTH ABUTMENT.dgn
8/12/2021 9:03:17 AM

Prairie Engineers, P.C.
www.prairieengineers.com
professional design firm no. 184-005965
© Copyright Prairie Engineers, P.C. 2018

USER NAME =	DESIGNED - SMA	REVISED -	
	CHECKED - CMF/TCD	REVISED -	
PLOT SCALE =	DRAWN - JLM	REVISED -	
PLOT DATE =	CHECKED - SMA	REVISED -	

STATE OF ILLINOIS
DEPARTMENT OF TRANSPORTATION

NORTH ABUTMENT
STRUCTURE NO. 046-0153
SHEET 44 OF 54 SHEETS

F.A.I. RTE.	SECTION	COUNTY	TOTAL SHEETS	SHEET NO.
57	139HBR-6	KANKAKEE	202	133
		CONTRACT NO. 66997		
	ILLINOIS FED. AID PROJECT			

Note 1.
4-#5 h1(E) bars, short face (E)
4-#5 h2(E) bars, long face (E)
5-#5 h1(E) bars, short face (W)
5-#5 h2(E) bars, long face (W)

Note 2.
1-#5 h8(E) bars, short face (E)
1-#5 h9(E) bars, long face (E)
1-#5 h6(E) bars, short face (W)
1-#5 h7(E) bars, long face (W)
(cut to fit)

Note 3.
2-#5 h5(E) bars (E)
at 12" cts. each face
(See field cutting diagram)
1-#5 h3(E) bar, short face (W)
1-#5 h4(E) bar, long face (W)

Note 4.
Order 5-p(E), 1-p1(E), 1-p2(E), 1-p3(E), 1-p4(E), 5-p5(E) bars for each stage and cut to fit for Stage II.

Note 5.
Order p22(E) bars full length and cut as shown in Field Cutting Diagram. Use shorter sections in lower step for Stage II.

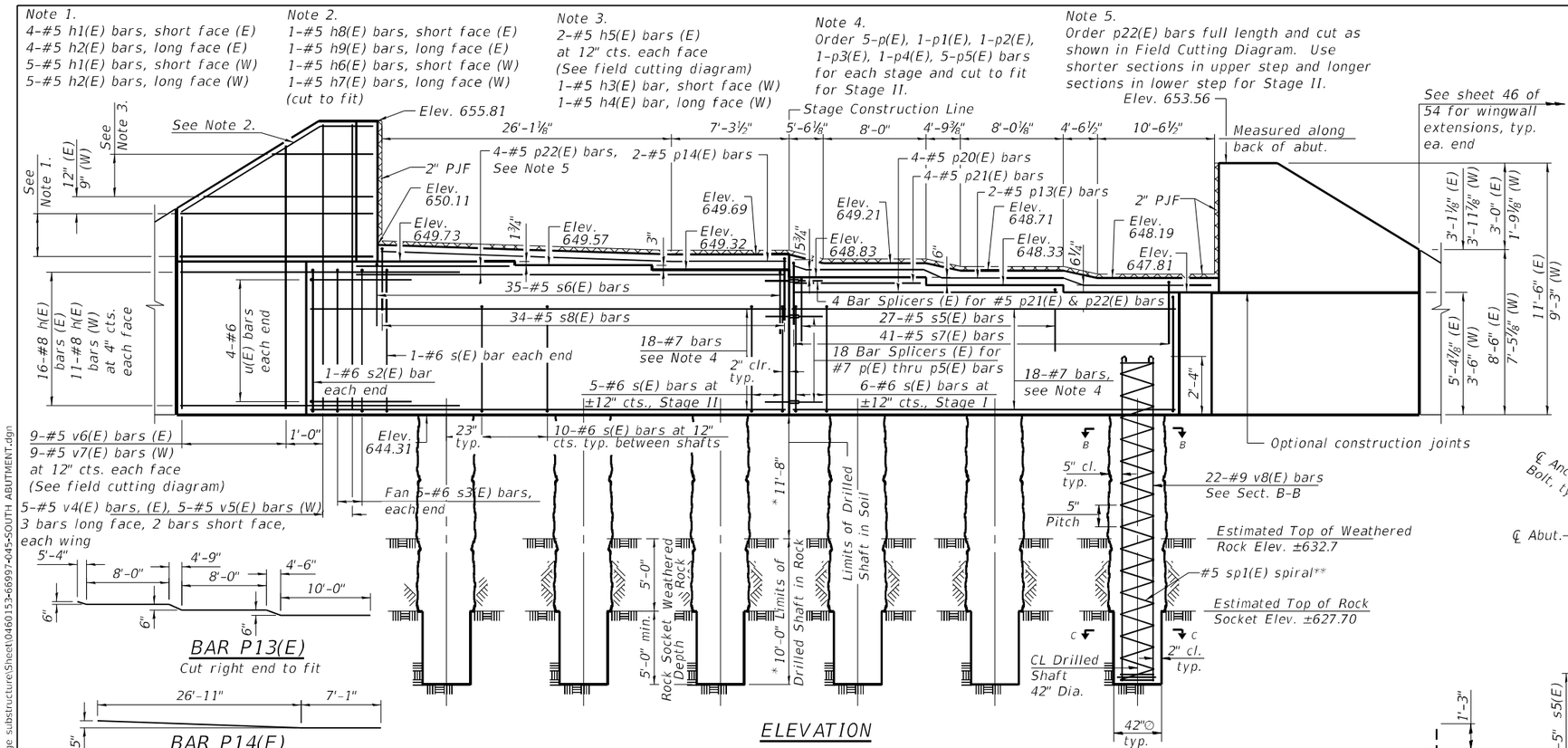

BAR P13(E)
Cut right end to fit

BAR P14(E)
Cut left end to fit

ELEVATION
(Looking South)

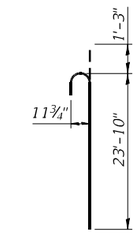

BAR v8(E)

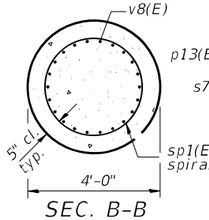

SEC. B-B

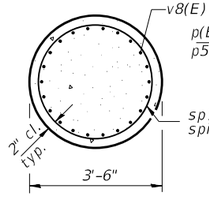

SEC. C-C

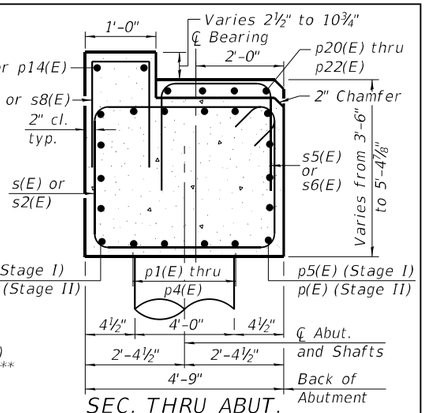

SEC. THRU ABUT.
Dimensions at right angles to abutment.

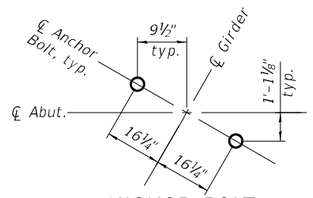

ANCHOR BOLT LOCATION DETAIL

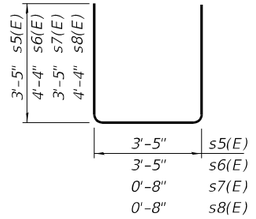

BAR s5(E) thru s8(E)

Space reinforcement in cap to miss anchor bolts.
Pour steps monolithically with cap.
See bar diagrams on sheet 44 of 54 for bars s(E) thru s3(E), u(E) and h6(E) thru h9(E).
Minimum lap for spirals = 3'-9"
* The quantities and detailing are based on the estimated elevations shown on the plans. The actual elevations may differ at each shaft and corresponding adjustments shall be made to the drilled shaft and reinforcement quantities and payment limits.
**Provide 1½ extra turns top and bottom of each drilled shaft. Extend spiral 2'-0" into abutment cap. Provide min. 4-#4 spacers or equivalent.
***Length is height of spiral.

BILL OF MATERIAL

Bar	No.	Size	Length	Shape
h(E)	27	#8	16'-11"	
h1(E)	9	#5	9'-10"	
h2(E)	9	#5	10'-6"	
h3(E)	1	#5	6'-2"	
h4(E)	1	#5	6'-10"	
h5(E)	2	#5	11'-8"	
h6(E)	1	#5	10'-0"	
h7(E)	1	#5	10'-8"	
h8(E)	1	#5	10'-4"	
h9(E)	1	#5	11'-0"	
p(E)	10	#7	40'-7"	
p1(E)	4	#7	39'-6"	
p2(E)	4	#7	38'-3"	
p3(E)	4	#7	37'-1"	
p4(E)	4	#7	35'-11"	
p5(E)	10	#7	34'-7"	
p13(E)	2	#5	40'-10"	
p14(E)	2	#5	34'-0"	
p20(E)	4	#5	25'-11"	
p21(E)	4	#5	13'-2"	
p22(E)	4	#5	48'-10"	
s(E)	53	#6	16'-6"	
s2(E)	2	#6	22'-8"	
s3(E)	10	#6	11'-2"	
s5(E)	27	#5	10'-3"	
s6(E)	35	#5	12'-1"	
s7(E)	41	#5	7'-6"	
s8(E)	34	#5	9'-4"	
sp1(E)	6	#5	23'-8"	
u(E)	8	#6	15'-11"	
v4(E)	5	#5	11'-1"	
v5(E)	5	#5	8'-10"	
v6(E)	9	#5	19'-6"	
v7(E)	9	#5	15'-9"	
v8(E)	132	#9	25'-1"	
Structure Excavation			Cu. Yd.	269
Concrete Structures			Cu. Yd.	69.2
Reinforcement Bars, Epoxy Coated			Pound	23,260
Drilled shaft in soil			Cu. Yd.	32.6
Drilled shaft in rock			Cu. Yd.	24.6
Granular backfill for Structures			Cu. Yd.	242
Thermal Integrity Profile Testing			Each	6
Thermal Integrity Profile Data Collection			Foot	130
Pipe Underdrain for Structures 4"			Foot	97
Geocomp. Wall Drain			Sq. Yd.	98

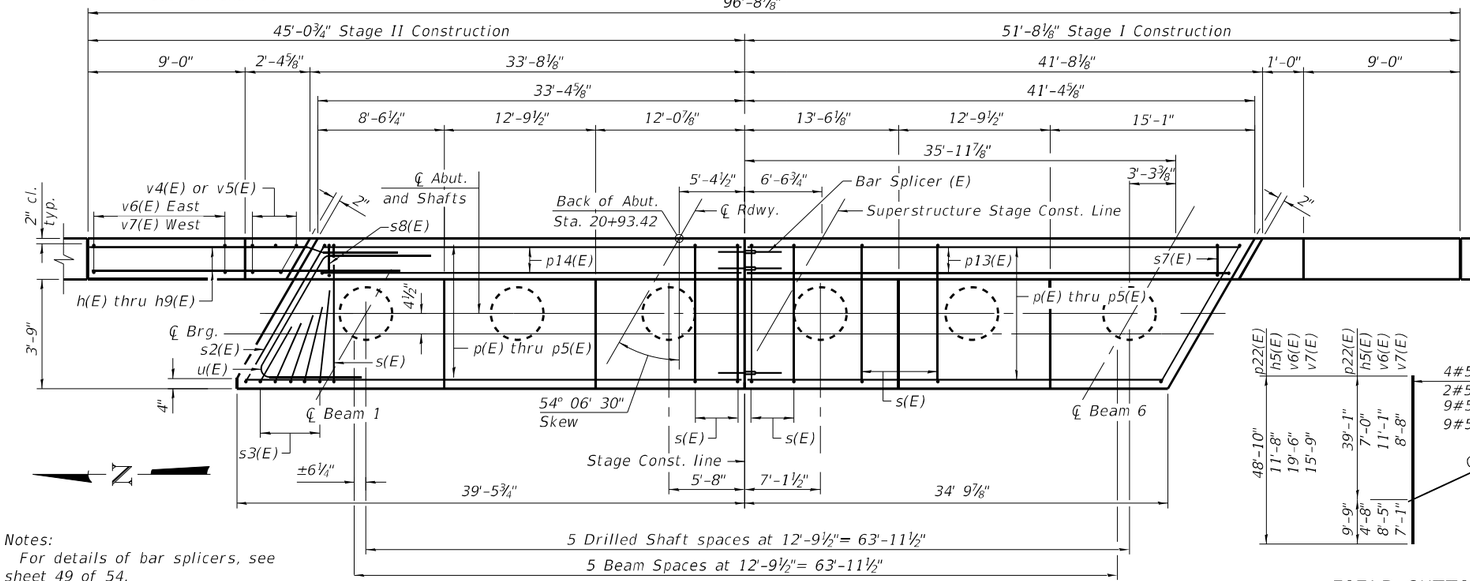

PLAN

MINIMUM BAR LAP
#5 bar = 3'-7"
#7 bar = 5'-0"

FIELD CUTTING DIAGRAM
Order bars full length. Cut as shown and use remainder of bars in opposite face, except see Note 5 for p22(E) bars.

Notes:
For details of bar splicers, see sheet 49 of 54.
Headed bars shall conform to ASTM A970 with threaded attachment; Class HA; and reinforcement bars conforming to ASTM A706. Cost included with Reinforcement Bars, Epoxy Coated.

Prairie Engineers, P.C.
www.prairieengineers.com
professional design firm no. 184-005965

© Copyright Prairie Engineers, P.C. 2018

USER NAME =	DESIGNED - SMA	REVISED -	
	CHECKED - CMF/TCD	REVISED -	
PLOT SCALE =	DRAWN - JLM	REVISED -	
PLOT DATE =	CHECKED - SMA	REVISED -	

STATE OF ILLINOIS
DEPARTMENT OF TRANSPORTATION

SOUTH ABUTMENT
STRUCTURE NO. 046-0153
SHEET 45 OF 54 SHEETS

F.A.I. RTE.	SECTION	COUNTY	TOTAL SHEETS	SHEET NO.
57	139HBR-6	KANKAKEE	202	134
		CONTRACT NO. 66997		
		ILLINOIS	FED. AID PROJECT	

MODEL: 046015-66997-045
FILE NAME: I:\jobs\2019\19.1901 PTB 192-011 District 3 Various Phase III Structure Projects\WO 2 - Waldron Road over I-57\Drawingsbridge substructure\Sheet\046015-66997-045-SOUTH ABUTMENT.dgn

8/12/2021 9:04:29 AM

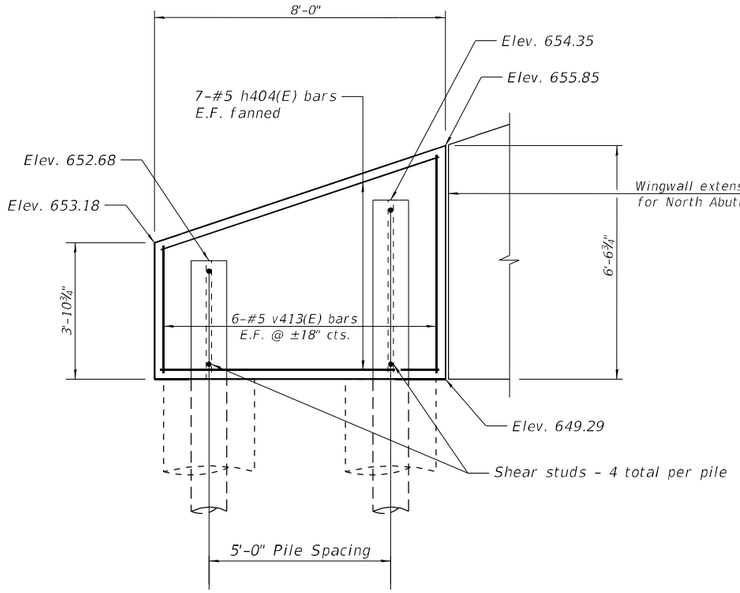

NW WINGWALL EXTENSION

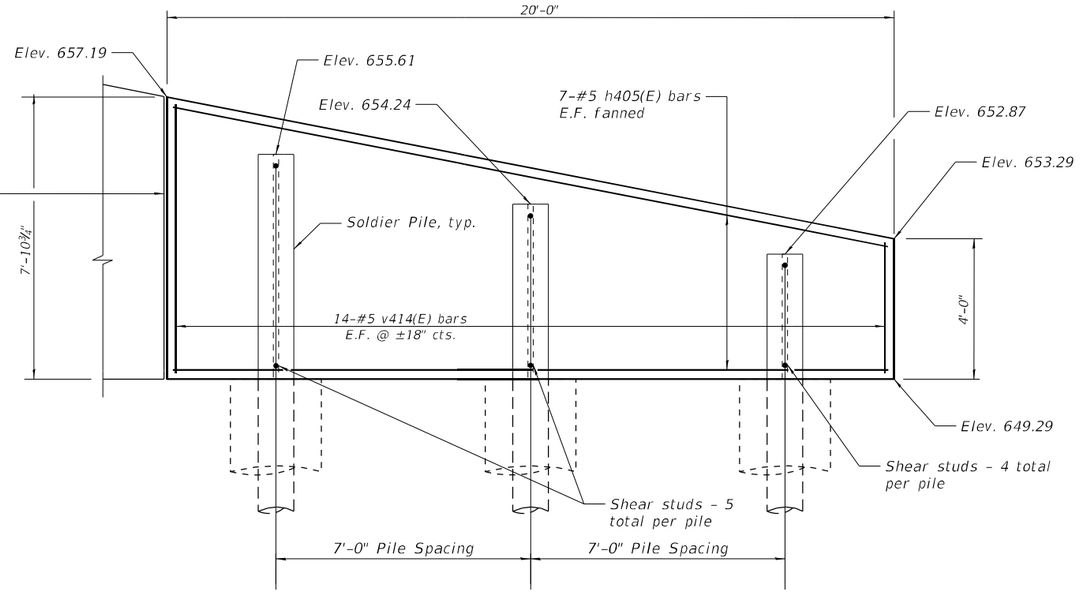

NE WINGWALL EXTENSION

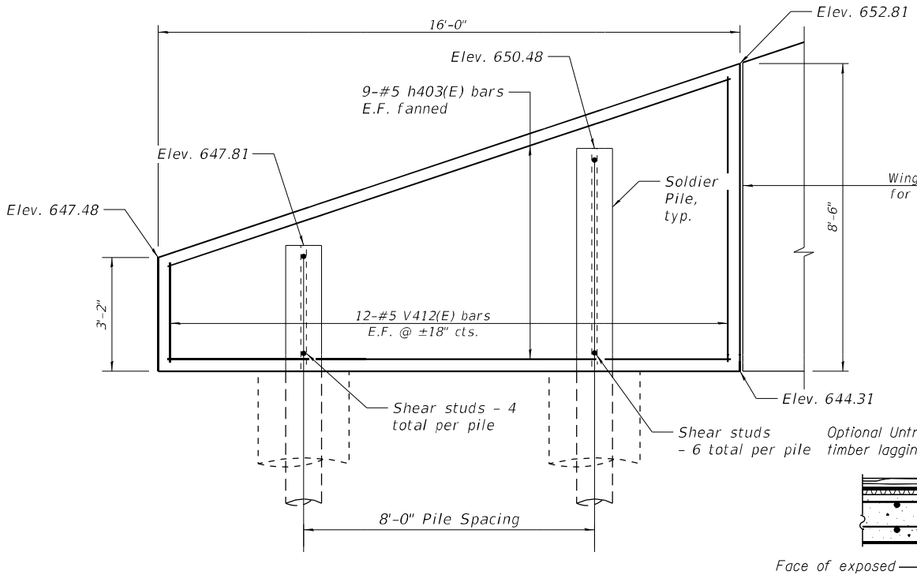

SE WINGWALL EXTENSION

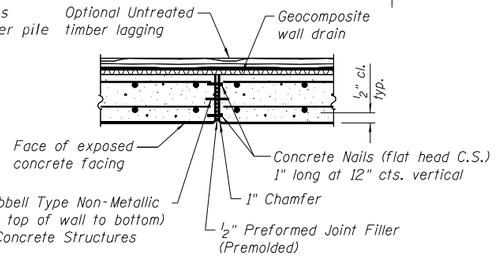

6" Hollow Bulb Dumbbell Type Non-Metallic
Water Seal (6" from top of wall to bottom)
Cost included with Concrete Structures

EXPANSION JOINT

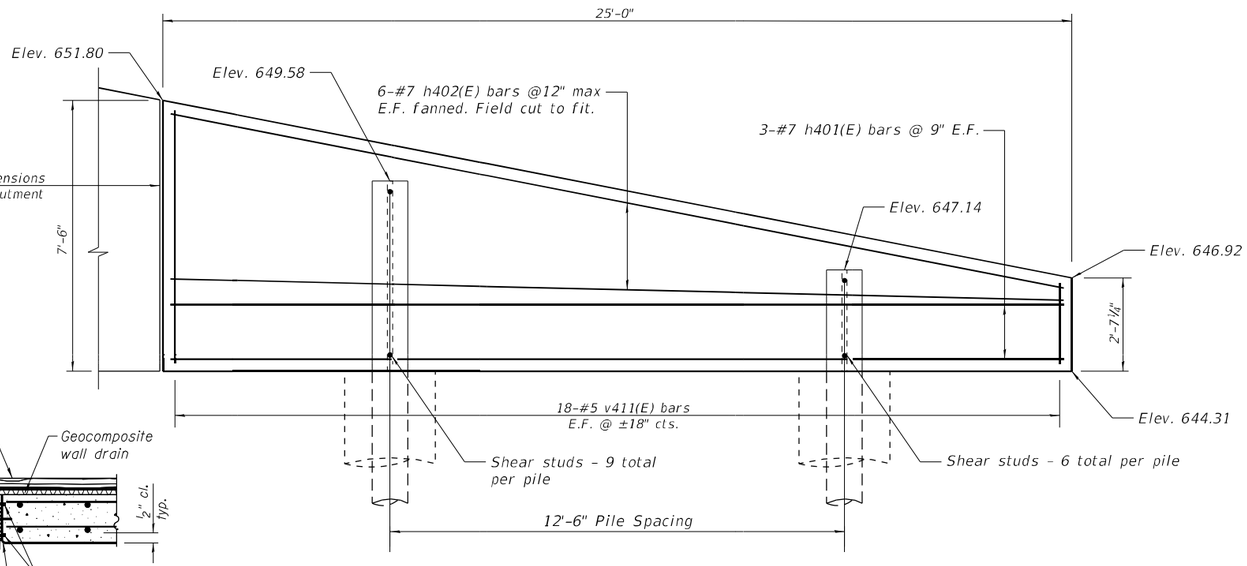

SW WINGWALL EXTENSION

Notes:
F.F. = Front Face
B.F. = Back Face
See Bill of Materials and reinforcement
field culling diagram on sheet 47 of 54.

MODEL: 046153-66997-046
FILE NAME: I:\jobs\2019\193.1901 PTB 192-011 District 3 Various Phase III Structure Projects\WO 2 - Waldron Road over I-57\Drawings\bridge substructure\Sheet\046153-66997-046-Wingwall Extensions.dgn
4/19/2021 2:45:31 PM

Prairie Engineers, P.C.
www.prairieengineers.com
professional design firm no. 184-005965
© Copyright Prairie Engineers, P.C. 2020

USER NAME = _____	DESIGNED - RC	REVISED - _____	
	CHECKED - CMF	REVISED - _____	
PLOT SCALE = _____	DRAWN - RNH	REVISED - _____	
PLOT DATE = _____	CHECKED - RC	REVISED - _____	

STATE OF ILLINOIS
DEPARTMENT OF TRANSPORTATION

WINGWALL EXTENSION ELEVATIONS
STRUCTURE NO. 046-0153
SHEET 46 OF 54 SHEETS

F.A.I. RTE.	SECTION	COUNTY	TOTAL SHEETS	SHEET NO.
57	139HBR-6	KANKAKEE	202	135
		CONTRACT NO. 66997		
		ILLINOIS	FED. AID PROJECT	

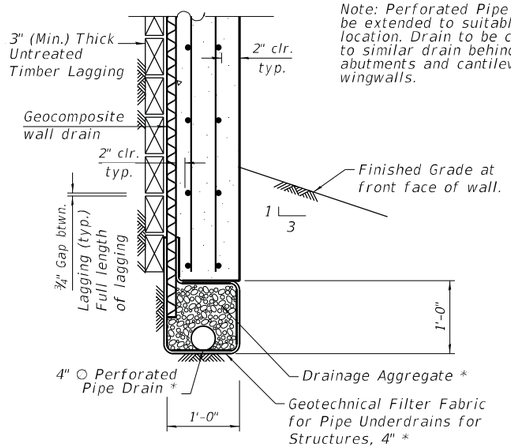

Note: Perforated Pipe Drain to be extended to suitable location. Drain to be connected to similar drain behind abutments and cantilevered wingwalls.

PIPE UNDERDRAIN DETAIL (BETWEEN SOLDIER PILES)

* Included in the cost of Pipe Underdrains for Structures

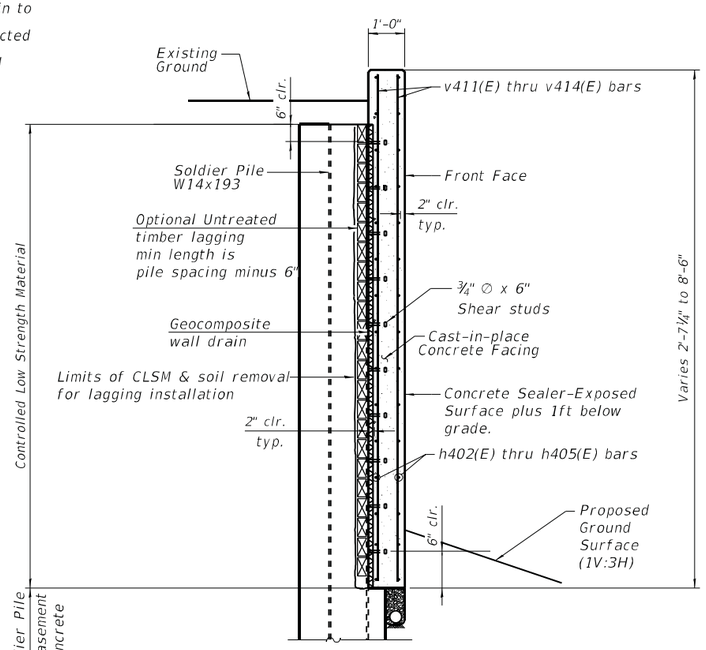

TYPICAL SECTION THRU DRILLED SOLDIER PILE WINGWALL EXTENSION

PILE	PILE STATION	OFFSET	TOP OF PILE ELEVATION	BOTTOM OF WALL ELEVATION	SECTION	HOLE DIAMETER	PILE TIP ELEVATION SEE NOTE 1	FURNISHING SOLDIER PILES (W SECTION)
			(FEET)	(FEET)			(FEET)	(FEET)
SE 1	231+05.26	79.51 LT	647.810	644.31	W14X193	2'-6"	623.700	24.110
SE 2	231+13.26	79.51 LT	650.477	644.31	W14X193	2'-6"	623.700	26.777
SW 1	232+20.24	79.51 LT	649.581	644.31	W14X193	2'-6"	623.700	25.881
SW 2	232+32.74	79.51 LT	647.140	644.31	W14X193	2'-6"	623.700	23.440
NE 1	228+83.69	79.51 RT	652.872	649.29	W14X193	2'-6"	620.800	32.072
NE 2	228+90.69	79.51 RT	654.239	649.29	W14X193	2'-6"	620.800	33.439
NE 3	228+97.69	79.51 RT	655.606	649.29	W14X193	2'-6"	620.800	34.806
NW 1	229+98.94	79.51 RT	654.350	649.29	W14X193	2'-6"	620.800	33.550
NW 2	230+03.94	79.51 RT	652.683	649.29	W14X193	2'-6"	620.800	31.883

Note 1: Minimum socket depth is 4 feet below competent rock.

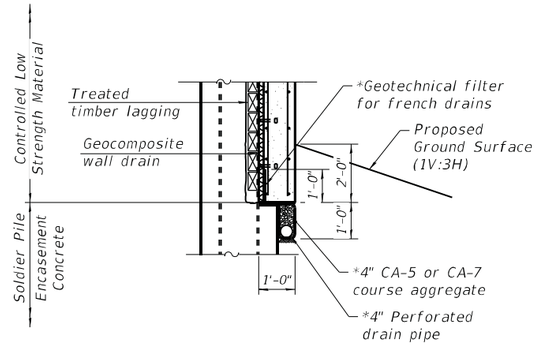

PIPE UNDERDRAIN DETAIL AT SOLDIER PILES

*Included in the cost of Pipe Underdrains for Structures

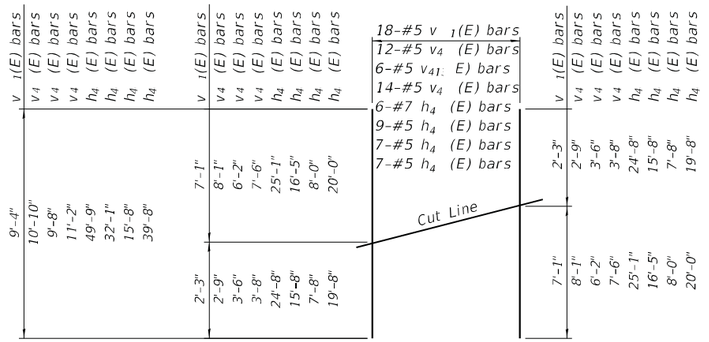

FIELD CUTTING DIAGRAM

Order bars full length. Cut as shown and use remainder of bars in opposite face.

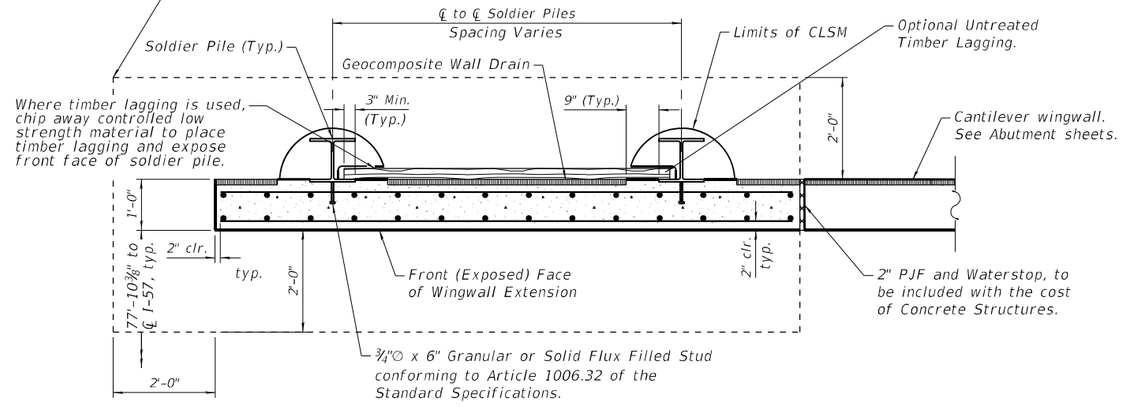

HORIZONTAL SECTION THRU SOLDIER PILE WINGWALL EXTENSION

The Contractor may optionally choose to use timber lagging rather than excavating behind the wall between piles and using traditional formwork. The Contractor is responsible for the design and performance of the lagging using no less than a 3 in. nominal rough-sawn thickness and timber with a minimum allowable bending stress of 1000 psi. This lagging will not be paid for separately but will be included in the cost of Concrete Structures.

WINGWALL EXTENSION BILL OF MATERIAL

Bar	No.	Size	Length	Shape
h401(E)	6	#7	24'-8"	
h402(E)	6	#7	49'-9"	
h403(E)	9	#5	32'-1"	
h404(E)	7	#5	15'-8"	
h405(E)	7	#5	39'-8"	
v411(E)	18	#5	9'-4"	
v412(E)	12	#5	10'-10"	
v413(E)	6	#5	9'-8"	
v414(E)	14	#5	11'-2"	
Structure Excavation		Cu. Yd.	79	
Concrete Structures		Cu. Yd.	14.1	
Concrete Sealer		Sq. Ft.	546	
Reinforcement Bars, Epoxy Coated		Pound	2,150	
Drilling and Setting Soldier Piles (in Soil)		Cu. Ft.	984	
Drilling and Setting Soldier Piles (in Rock)		Cu. Ft.	351	
Furnishing Soldier Piles (W Section)		Foot	266	
Pipe Underdrains for Structures 4"		Foot	159	
Stud Shear Connectors		Each	47	
Geocomposite Wall Drain		Sq. Yd.	42	

See Sheet 3 of 54 for Sequence of Construction.

MODEL: 046015-66997-047
FILE NAME: I:\jobs\20\19\193.1901 PTB 192-011 District 3 Various Phase III Structure Projects\WO 2 - Waldron Road over I-57\Drawings\bridge substructure\Sheet\046015-66997-047-Wingwall Section & B.O.M.dgn
3/11/2021 4:54:35 PM

Prairie Engineers, P.C.
www.prairieengineers.com
professional design firm no. 184-005965
© Copyright Prairie Engineers, P.C. 2018

USER NAME =	DESIGNED - RC	REVISED -	
	CHECKED - CMF	REVISED -	
PLOT SCALE =	DRAWN - RNH	REVISED -	
PLOT DATE =	CHECKED - RC	REVISED -	

STATE OF ILLINOIS
DEPARTMENT OF TRANSPORTATION

WINGWALL EXTENSION SECTIONS & DETAILS
STRUCTURE NO. 046-0153
SHEET 47 OF 54 SHEETS

F.A.I. RTE.	SECTION	COUNTY	TOTAL SHEETS	SHEET NO.
57	139HBR-6	KANKAKEE	202	136
		CONTRACT NO. 66997		
	ILLINOIS FED. AID PROJECT			

Notes:
Space reinforcement in cap to miss anchor bolts.
Pour steps monolithically with cap.
Concrete Sealer shall be applied to all exposed areas of the pier.
See sheet 49 of 54 for bar splicer details.

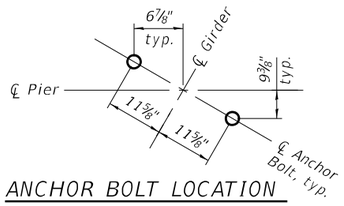

ANCHOR BOLT LOCATION DETAIL

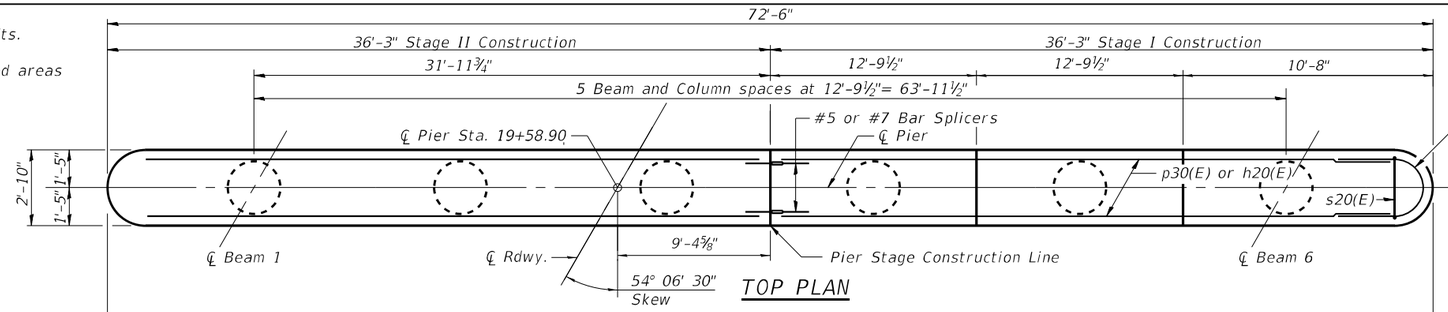

TOP PLAN

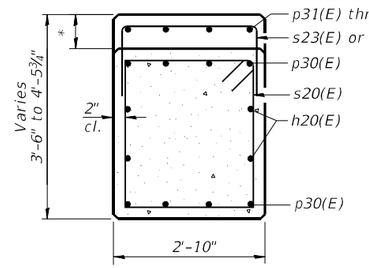

SEC. A-A

*Step heights vary, see Elevation

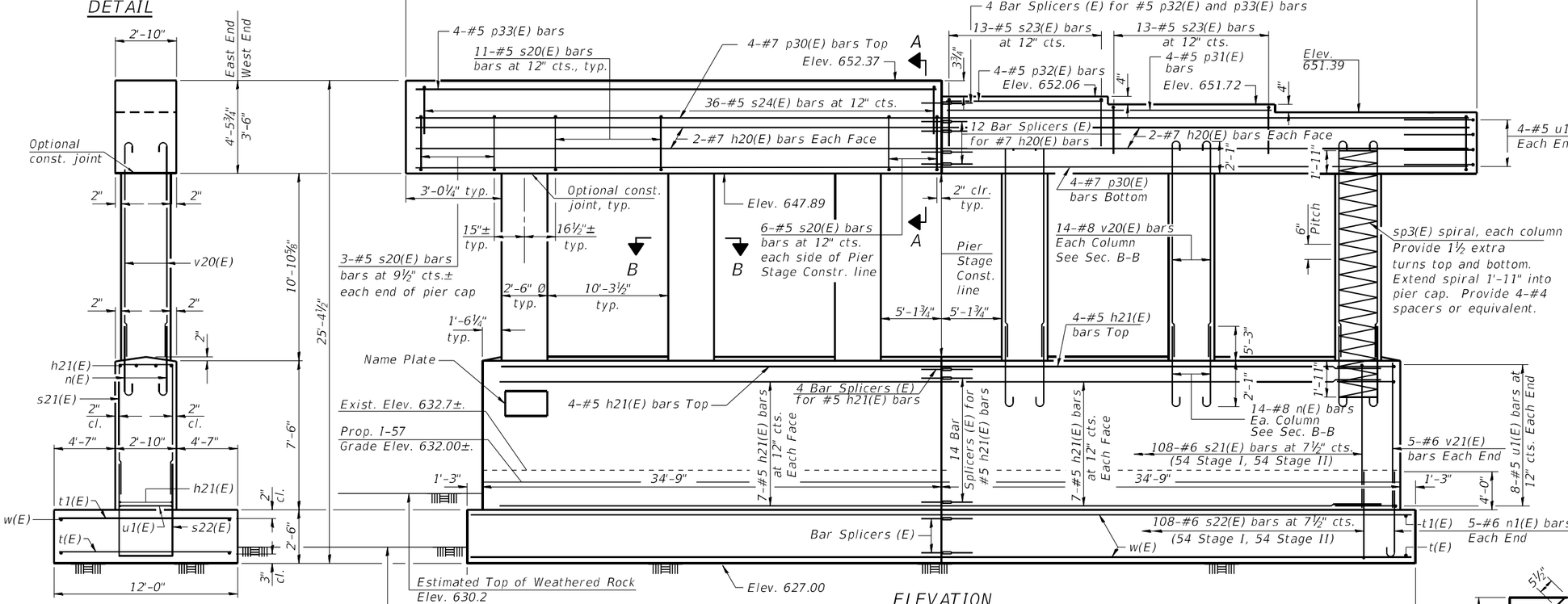

END VIEW

ELEVATION
(Looking South - Upstation Waldron Road)

The bottom of footing elevation(s) shall be adjusted to ensure a minimum embedment of 6 inches in non-weathered rock. The rock excavation shall be made with near-vertical sides at the plan dimensions to allow the sides and base of the embedded portion of the footing to be cast against undisturbed rock surfaces.
Maximum applied service bearing pressure = Qmax = 5.3 ksf.

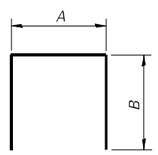

BARS

A & B DIMENSIONS

Bar	A	B
s21(E)	2'-6"	7'-2"
s22(E)	2'-6"	6'-3"
s23(E)	2'-6"	3'-1"
s24(E)	2'-6"	3'-5"

MINIMUM BAR LAP
#5 bar = 3'-7"
#7 bar = 5'-0"

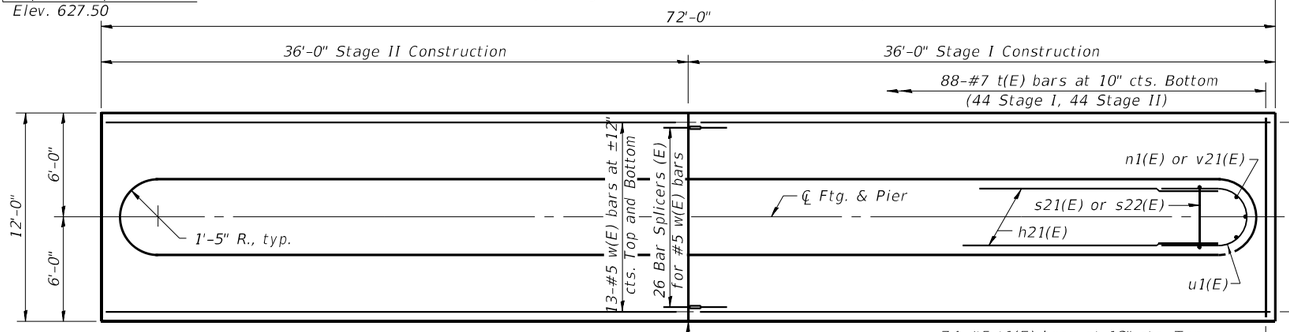

FOOTING PLAN

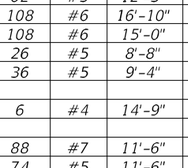

BAR s20(E)

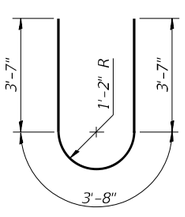

BAR u1(E)

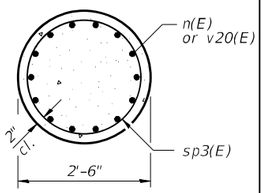

SEC. B-B

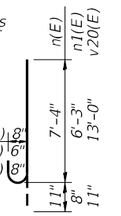

BAR n(E), n1(E), & v20(E)

BILL OF MATERIAL

Bar	No.	Size	Length	Shape
h20(E)	8	#7	34'-8"	
h21(E)	36	#5	33'-2"	
n(E)	84	#8	8'-3"	
n1(E)	10	#6	6'-11"	
p30(E)	16	#7	34'-8"	
p31(E)	4	#5	25'-3"	
p32(E)	4	#5	12'-5"	
p33(E)	4	#5	34'-8"	
s20(E)	62	#5	12'-3"	
s21(E)	108	#6	16'-10"	
s22(E)	108	#6	15'-0"	
s23(E)	26	#5	8'-8"	
s24(E)	36	#5	9'-4"	
** sp3(E)	6	#4	14'-9"	
t(E)	88	#7	11'-6"	
t1(E)	74	#5	11'-6"	
u1(E)	24	#5	10'-10"	
v20(E)	84	#8	13'-11"	
v21(E)	10	#6	7'-2"	
w(E)	52	#5	35'-7"	
Structure Excavation		Cu. Yd.	113	
Rock Excavation for Structures		Cu. Yd.	102	
Concrete Structures		Cu. Yd.	178.1	
Reinforcement Bars, Epoxy Coated		Pound	21,160	
Concrete Sealer		Sq. Ft.	2,234	

** Length is height of spiral.

P-26

2-17-2017

Prairie Engineers, P.C.
www.prairieengineers.com
professional design firm no. 184-005965

© Copyright Prairie Engineers, P.C. 2018

USER NAME =		DESIGNED - SMA	REVISED -		
		CHECKED - CMF/TCD	REVISED -		
PLOT SCALE =		DRAWN - JLM	REVISED -		
PLOT DATE =		CHECKED - SMA	REVISED -		

STATE OF ILLINOIS
DEPARTMENT OF TRANSPORTATION

PIER DETAILS
STRUCTURE NO. 046-0153
SHEET 48 OF 54 SHEETS

F.A.I. RTE.	SECTION	COUNTY	TOTAL SHEETS	SHEET NO.
57	139HBR-6	KANKAKEE	202	137
		CONTRACT NO. 66997		
	ILLINOIS FED. AID PROJECT			

MODEL: 046153-66997-048
FILE NAME: I:\jobs\2019\19.1901 PTB 192-011 District 3 Various Phase III Structure Projects\WO 2 - Waldron Road over I-57\Drawings\bridge substructure\Sheet\046153-66997-048-PIER.dgn
8/12/2021 9:05:54 AM

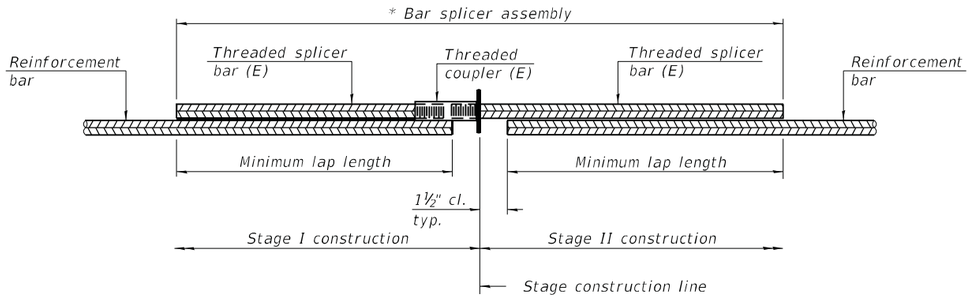

STANDARD BAR SPLICER ASSEMBLY PLAN

(All components shall be provided from one supplier)

Threaded splicer bar length = min. lap length + 1½" + thread length

** Epoxy not required on Bar Splicer Assembly components used in conjunction with black bars.*

Location	Bar size	No. assemblies required	Minimum lap length
Deck (top)	#5	572	3'-0"
Deck (bottom)	#5	351	3'-6"
Abutments	#5	6	3'-7"
Abutments	#7	36	5'-0"
Pier	#5	48	3'-7"
Pier	#7	12	5'-0"
Approach Slab	#5	18	3'-0"
Approach Slab	#4	18	2'-5"
Approach Slab Footing	#5	80	3'-0"
Back Face of Diaphragms	#6	22	3'-7"
Bottom of Diaphragms	#4	4	2'-5"

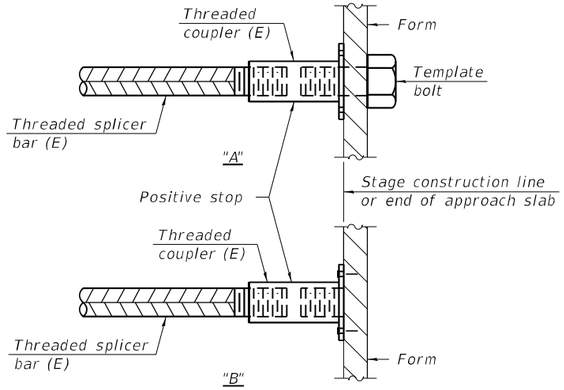

INSTALLATION AND SETTING METHODS

"A" : Set bar splicer assembly by means of a template bolt.
"B" : Set bar splicer assembly by nailing to wood forms or cementing to steel forms.
(E) : Indicates epoxy coating.

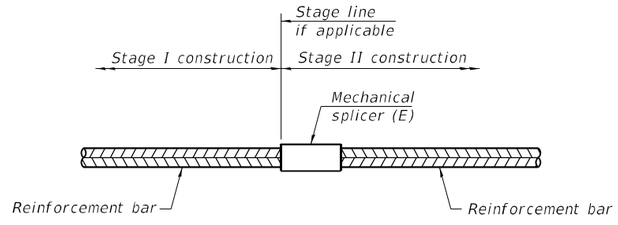

STANDARD MECHANICAL SPLICER

Location	Bar size	No. assemblies required

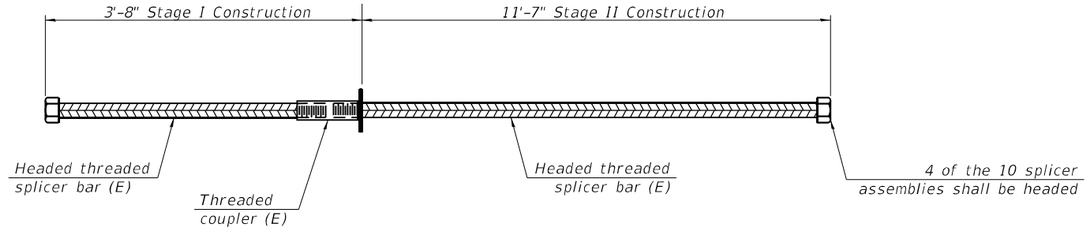

BAR SPLICER BETWEEN BEAMS (10 Required)

Notes:

Splicer bars shall be deformed with threaded ends and have a minimum 60 ksi yield strength.

All reinforcement shall be lapped and tied to the splicer bars.

Bar splicer assemblies shall be epoxy coated according to the requirements for reinforcement bars. See Section 508 of the Standard Specifications.

See approved list of bar splicer assemblies and mechanical splicers for alternatives.

MODEL: TEMP CONC BARRIER
FILE NAME: G:\Users\11\11335-01-Wal\Iron-Road-over-I57-Superstructure\Survey D366997\Consultant_Data\Chamlin_2020\CAD_Sheets\046015 3-66997-049-BAR_SPLICER.dgn
3/11/2021 3:35:23 PM

Chamlin & Associates

USER NAME =	DESIGNED - JKC	REVISED -
	CHECKED - AJO	REVISED -
PLOT SCALE =	DRAWN - LAG	REVISED -
PLOT DATE =	CHECKED - JKC	REVISED -

STATE OF ILLINOIS
DEPARTMENT OF TRANSPORTATION

BAR SPLICER ASSEMBLY AND MECHANICAL SPLICER DETAILS
STRUCTURE NO. 046-0153
SHEET 49 OF 54 SHEETS

F.A.I. RTE.	SECTION	COUNTY	TOTAL SHEETS	SHEET NO.
57	139HBR-6	KANKAKEE	202	138
		CONTRACT NO. 66997		
	ILLINOIS	FED. AID PROJECT		

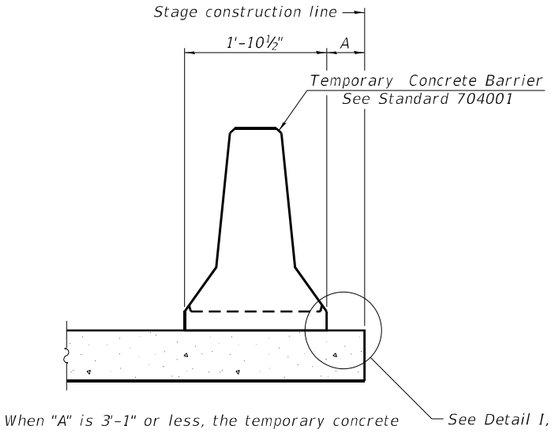

When "A" is 3'-1" or less, the temporary concrete barrier shall be restrained to the new slab according to Detail I, II or III. No restraint is required when "A" is greater than 3'-1".

NEW SLAB OR NEW DECK BEAM

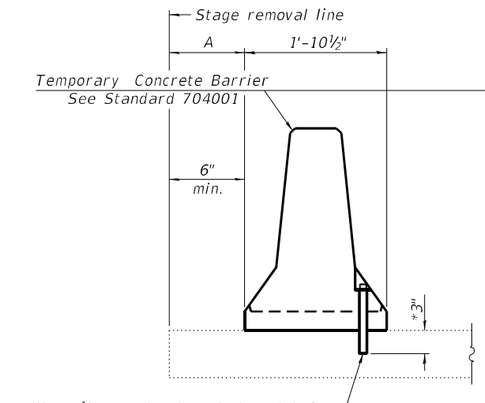

Drill 3-1¼" Ø Holes in existing slab for 1" Ø restraining pins. Traffic side only. Cost of restraining pins are included with Temporary Concrete Barrier. No restraint is required when "A" is greater than 3'-1".

EXISTING SLAB

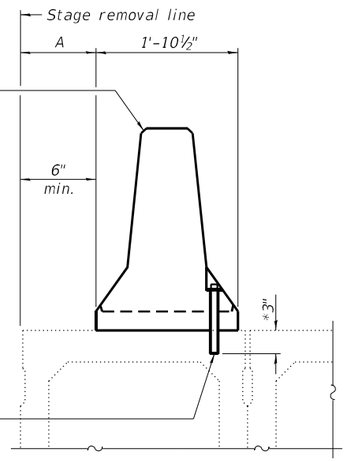

* When hot-mix asphalt wearng surface is present, embedment shall be 3" plus the wearing surface depth.

EXISTING DECK BEAM

SECTIONS THRU SLAB OR DECK BEAM

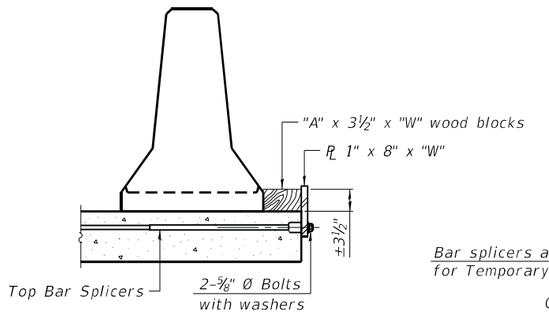

DETAIL I

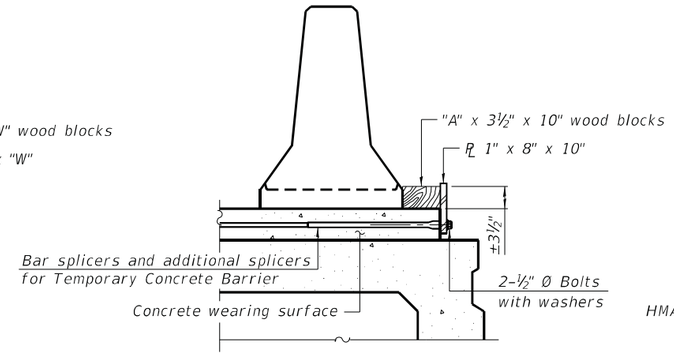

DETAIL II

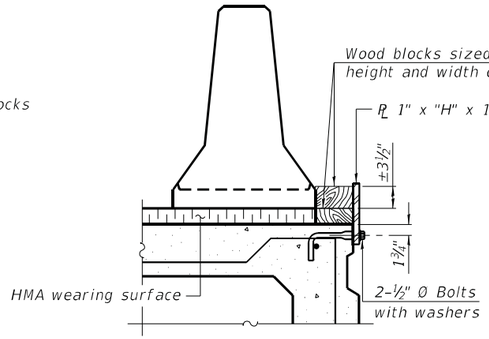

DETAIL III

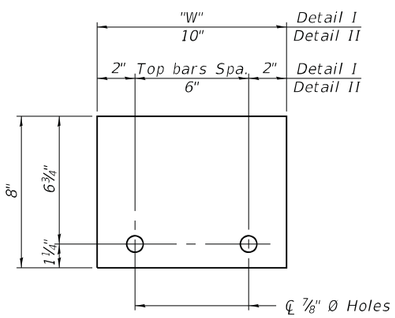

STEEL RETAINER ℄ 1" x 8" x "W"
(Detail I and II)

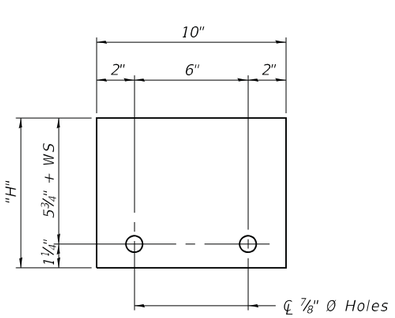

STEEL RETAINER ℄ 1" x "H" x 10"
(Detail III)

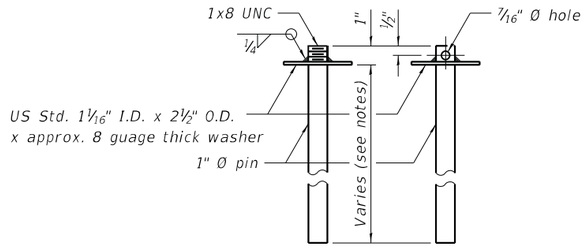

RESTRAINING PIN

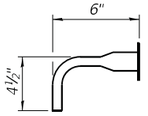

BAR SPLICER FOR #4 BAR - DETAIL III

Notes:

Cost of retainer assembly is included with Temporary Concrete Barrier.

A retainer assembly shall be located at the approximate ℄ of each temporary concrete barrier.

The retainer plate shall not be removed until the concrete on the adjacent stage is ready to be poured. For Detail III applications the retainer plate shall not be removed until just prior to placing the adjacent beam.

When the 'A' dimension is less than 1½", the wood block shall be omitted and the barrier shall be placed in direct contact with the steel retainer plate. For deck beam applications the minimum required 'A' distance is 6" to accommodate the shear key clamping device.

Detail I - Installation for a new bridge deck or bridge slab.

Detail II - Installation for a new deck beam with an initial concrete wearing surface. Additional bar splicers shall be provided at 6'-0" centers and paired with the bar splicers of the concrete wearing surface reinforcement to accommodate the installation of the retainer assemblies. The cost of the additional bar splicers is included with the concrete wearing surface.

Detail III - Installation for a new deck beam with no initial wearing surface or with an initial hot-mix asphalt (HMA) wearing surface present. The deck beam directly beneath the temporary concrete barrier shall be fabricated with bar splicer inserts in the side of the beam, as detailed, to accommodate the installation of the retainer assemblies. A pair of bar splicers, 6" apart, shall be placed at 6'-0" centers along the length of the beam. The cost of the bar splicers is included with the deck beam.

R-27

2-17-2017

Chamlin & Associates

USER NAME =	DESIGNED - JKC	REVISED -	
	CHECKED - AJO	REVISED -	
PLOT SCALE =	DRAWN - LAG	REVISED -	
PLOT DATE =	CHECKED - JKC	REVISED -	

STATE OF ILLINOIS
DEPARTMENT OF TRANSPORTATION

TEMPORARY CONCRETE BARRIER FOR STAGE CONSTRUCTION
STRUCTURE NO. 046-0153

SHEET 50 OF 54 SHEETS

F.A.I. RTE.	SECTION	COUNTY	TOTAL SHEETS	SHEET NO.
57	139HBR-6	KANKAKEE	202	139
		CONTRACT NO. 66997		
	ILLINOIS	FED. AID PROJECT		

MODEL: TEMP CONC BARRIER
FILE NAME: G:\Users\11\11111335-01-Waltron-Road-over-I57-SuperstructureSurvey_D366997\Consultant_Data\Chamlin_2020\CAD_Sheets\046153-66997-050-CONC_BARRIER.dgn

3/2/2021 3:29:56 PM

(Waldron rd.)
18+2.22
12.0' LT

Illinois Department of Transportation
Division of Highways
IDOT

SOIL BORING LOG

Page 1 of 1

Date 3/27/10

ROUTE I-57 (FAI 57) DESCRIPTION Waldron Road over I-57, Retaining Wall Soil Investigation LOGGED BY Larry Myers

SECTION (46-3)R, HBK, 5HBR, 6HBR LOCATION SE 1/4, SEC. 4, TWP. 30N, RNG. 13W
Latitude 41.108482, Longitude -87.835524

COUNTY Kankakee DRILLING METHOD Hollow Stem Auger HAMMER TYPE CME Automatic

STRUCT. NO. 046-0080
Station 230+53.99 (Exist.)

BORING NO. BH 101 (NW Quad.)
Station 229+13.97
Offset 82.1 ft Rt.
Ground Surface Elev. 657.19 ft

Surface Water Elev. ft
Stream Bed Elev. ft

Groundwater Elev.:
First Encounter ft
Upon Completion ft
After Hrs. ft

DEPTH (ft)	BLOWS (/6")	UCS Qu (tsf)	MOIST (%)
Augered Bituminous, Sand & Gravel & Black, Gray, Silty Clay Loam Fill			
654.69			
Very Stiff to Hard, Gray/Brown/Black, Silty Loam/Silty Clay Loam Till Fill with Rock & Concrete Debris	4		
	5 6	3.5 P	23
-5			
	3		
	4 5	3.5 P	18
648.69	3		
Hard Gray & Brown Silty Clay/Silty Clay Loam	8	4.3 S	22
647.19 -10			
Hard, Brown, Silty Clay Loam Till	8		
	12 14	8.2 S	17
	9		
	10 11	8.2 S	19
642.19 -15			
Very Stiff Brown Silty Loam Till with Silt Layers	3		
	4 5	3.0 P	20
	3		
	4 5	3.0 P	18
637.69 -20			
Hard Brown to Gray Silty Clay/Silty Clay Loam Till *(continued)*	5		
	6 7	4.6 S	19
	3		
	5 7	4.0 S	22
632.19 -25			
Hard Gray Silty Clay Loam Till with Large Gravel Pieces	4		
	8 12	4.0 P	12
629.69			
Assumed Dolostone Surface, Auger Refusal	100/1"	No Recovery	
End of Boring -30			
-35			
-40			

The Unconfined Compressive Strength (UCS) Failure Mode is indicated by (B-Bulge, S-Shear, P-Penetrometer)
The SPT (N value) is the sum of the last two blow values in each sampling zone (AASHTO T206)

BBS, form 137 (Rev. 8-99)

SOIL BORING I-57 & IL 17 INTERCHANGE.GPJ IL_DOT.GDT 11/12/14

(Waldron rd.)
18+2.61
5.1' LT

Illinois Department of Transportation
Division of Highways
Illinois Department of Transportation

SOIL BORING LOG

Page 1 of 1

Date 9/7/17

ROUTE I-57 (FAI 57) DESCRIPTION Waldron Road over I-57, 3.4 miles North of US 45/52 LOGGED BY Larry Myers

SECTION (46-3)R, HBK, 5HBR, 6HBR LOCATION SE 1/4, SEC. 4, TWP. 30N, RNG. 13W, 2nd PM.
Latitude 41.108486, Longitude -87.835544

COUNTY Kankakee DRILLING METHOD Hollow Stem Auger HAMMER TYPE CME Automatic

STRUCT. NO. 046-0080 (EX)
Station 230+53.99 (EX)

BORING NO. B 219 (N. Abut.)
Station 229+18.36
Offset 87.5 ft Rt.
Ground Surface Elev. 657.30 ft

Surface Water Elev. ft
Stream Bed Elev. ft

Groundwater Elev.:
First Encounter ft
Upon Completion ft
After Hrs. ft

DEPTH (ft)	BLOWS (/6")	UCS Qu (tsf)	MOIST (%)
Augered Material - Not Documented			
-5			
-10			
-15			
-20			
Augered Material - Not Documented *(continued)*			
-25			
-30			
-35			
624.80			
Borehole continued with rock coring.			
-40			

The Unconfined Compressive Strength (UCS) Failure Mode is indicated by (B-Bulge, S-Shear, P-Penetrometer)
The SPT (N value) is the sum of the last two blow values in each sampling zone (AASHTO T206)

BBS, form 137 (Rev. 8-99)

SOIL BORING I-57 & IL 17 INTERCHANGE.GPJ IL_DOT.GDT 2/5/18

(Waldron rd.)
18+2.61
5.1' LT

Illinois Department of Transportation
Division of Highways
Illinois Department of Transportation

ROCK CORE LOG

Page 1 of 1

Date 9/7/17

ROUTE I-57 (FAI 57) DESCRIPTION Waldron Road over I-57, 3.4 miles North of US 45/52 LOGGED BY Larry Myers

SECTION (46-3)R, HBK, 5HBR, 6HBR LOCATION SE 1/4, SEC. 4, TWP. 30N, RNG. 13W, 2nd PM.
Latitude 41.108486, Longitude -87.835544

COUNTY Kankakee CORING METHOD Split Barrel Wire Line

STRUCT. NO. 046-0080 (EX)
Station 230+53.99 (EX)

BORING NO. B 219 (N. Abut.)
Station 229+18.36
Offset 87.5 ft Rt.
Ground Surface Elev. 657.30 ft

CORING BARREL TYPE & SIZE N W/L 2
Core Diameter 1.9 in
Top of Rock Elev. 624.80 ft
Begin Core Elev. 624.80 ft

DEPTH (ft)	CORE (#)	RECOVERY (%)	R.Q.D. (%)	CORE TIME (min/ft)	STRENGTH (tsf)
Dense Gray Limestone with Generally Tight Horizontal Fractures, Interbedded Thin Shale Seams in top 6" Minor Calcite Crystal Vug Fill	1	97	28	2.2	895.1
-35					822.2
619.80					732.4
Dense Gray Limestone with Tight Horizontal Fracturing Minor Calcite Crystal Vug Fill	2	100	55	1.6	1359.7
-40					1354.8
614.80					1156.4
Dense Gray Limestone with Tight Horizontal Fractures Minor Calcite Crystal Vug Fill	3	100	83	3.2	1005.9
-45					1198.5
609.80					598.8
End of Boring -50					809.0

Color pictures of the cores Yes
Cores will be stored for examination until Construction Complete
The "Strength" column represents the uniaxial compressive strength of the core sample (ASTM D-2938)

BBS, form 138 (Rev. 8-99)

ROCK CORE I-57 & IL 17 INTERCHANGE.GPJ IL_DOT.GDT 2/5/18

MODEL: 046015-66997-051-054
FILE NAME: I:\jobs\2019\193.1901 PTB 192-011 District 3 Various Phase III Structure Projects\WO 2 - Waldron Road over I-57\Drawings\bridge substructure\Sheet\046015-66997-051-054-BORINGS.dgn

Prairie Engineers, P.C. www.prairieengineers.com professional design firm no. 184-005965 © Copyright Prairie Engineers, P.C. 2018	USER NAME =	DESIGNED - SMA	REVISED -	STATE OF ILLINOIS DEPARTMENT OF TRANSPORTATION	SOIL BORINGS STRUCTURE NO. 046–0153
		CHECKED - CMF/TCD	REVISED -		
	PLOT SCALE =	DRAWN - JLM	REVISED -		SHEET 51 OF 54 SHEETS
	PLOT DATE =	CHECKED - SMA	REVISED -		

F.A.I. RTE.	SECTION	COUNTY	TOTAL SHEETS	SHEET NO.
57	139HBR-6	KANKAKEE	202	140
			CONTRACT NO. 66997	
		ILLINOIS	FED. AID PROJECT	

3/11/2021 4:55:44 PM

(Waldron rd.)
19+26.25
35.0' LT

Illinois Department of Transportation
Division of Highways
IDOT

SOIL BORING LOG

Page 1 of 1

Date 9/4/13

ROUTE I-57 (FAI 57) DESCRIPTION Waldron Road over I-57, 3.4 miles North of US 45/52 LOGGED BY Larry Myers

SECTION (46-3)R, HBK, 5HBR, 6HBR LOCATION SE 1/4, SEC. 4, TWP. 30N, RNG. 13W, 2nd PM, Latitude 41.108251, Longitude -87.835183

COUNTY Kankakee DRILLING METHOD Hollow Stem Auger HAMMER TYPE CME Automatic

STRUCT. NO. 046-0080 (Exist.)
Station 230+53.99 (Exist.)

BORING NO. BH 68 (Pier)
Station 230+00.99
Offset 9.2 ft Lt.
Ground Surface Elev. 632.86 ft

Surface Water Elev. ft
Stream Bed Elev. ft

Groundwater Elev.:
First Encounter Dry ft
Upon Completion Dry ft
After ____ Hrs. ft

	DEPTH (ft)	BLOWS (/6")	UCS Qu (tsf)	MOIST (%)
Augered Bituminous Shoulder & Brown Fill Sand/Gravel	630.36			
Dense Weathered Dolomite	630.19	100/2"		
End of Boring				

SOIL BORING I-57 & IL 17 INTERCHANGE.GPJ IL_DOT.GDT 11/12/14

The Unconfined Compressive Strength (UCS) Failure Mode is indicated by (B-Bulge, S-Shear, P-Penetrometer)
The SPT (N value) is the sum of the last two blow values in each sampling zone (AASHTO T206)

BBS, form 137 (Rev. 8-99)

(Waldron rd.)
20+5.84
31.2' RT

Illinois Department of Transportation
Division of Highways
IDOT

SOIL BORING LOG

Page 1 of 1

Date 9/4/13

ROUTE I-57 (FAI 57) DESCRIPTION Waldron Road over I-57, 3.4 miles North of US 45/52 LOGGED BY Larry Myers

SECTION (46-3)R, HBK, 5HBR, 6HBR LOCATION SE 1/4, SEC. 4, TWP. 30N, RNG. 13W, 2nd PM, Latitude 41.107967, Longitude -87.835197

COUNTY Kankakee DRILLING METHOD Hollow Stem Auger HAMMER TYPE CME Automatic

STRUCT. NO. 046-0080 (Exist.)
Station 230+53.99 (Exist.)

BORING NO. BH 69 (Pier)
Station 231+04.30
Offset 2.2 ft Lt.
Ground Surface Elev. 632.74 ft

Surface Water Elev. ft
Stream Bed Elev. ft

Groundwater Elev.:
First Encounter Dry ft
Upon Completion Dry ft
After ____ Hrs. ft

	DEPTH (ft)	BLOWS (/6")	UCS Qu (tsf)	MOIST (%)
Augered Bituminous Shoulder & Tan Weathered & Reworked Dolomite	630.24			
Dense Tan Weathered Dolomite	629.24	100/4"		7
Auger Refusal @ 3.5' End of Boring				

SOIL BORING I-57 & IL 17 INTERCHANGE.GPJ IL_DOT.GDT 11/12/14

The Unconfinec Compressive Strength (UCS) Failure Mode is indicated by (B-Bulge, S-Shear, P-Penetrometer)
The SPT (N value) is the sum of the last two blow values in each sampling zone (AASHTO T206)

BBS, form 137 (Rev. 8-99)

MODEL: 046153-66997-051-054
FILE NAME: I:\jobs\2019\193.1901 PTB 192-011 District 3 Various Phase III Structure Projects\WO 2 - Waldron Road over I-57\Drawings\bridge substructure\Sheet\046153-66997-051-054-BORINGS.dgn
3/11/2021 4:56:15 PM

Prairie Engineers, P.C.
www.prairieengineers.com
professional design firm no. 184-005965
© Copyright Prairie Engineers, P.C. 2018

USER NAME =	DESIGNED - SMA	REVISED -	
	CHECKED - CMF/TCD	REVISED -	
PLOT SCALE =	DRAWN - JLM	REVISED -	
PLOT DATE =	CHECKED - SMA	REVISED -	

STATE OF ILLINOIS
DEPARTMENT OF TRANSPORTATION

SOIL BORINGS
STRUCTURE NO. 046–0153
SHEET 52 OF 54 SHEETS

F.A.I. RTE.	SECTION	COUNTY	TOTAL SHEETS	SHEET NO.
57	139HBR-6	KANKAKEE	202	141
		CONTRACT NO. 66997		
	ILLINOIS	FED. AID PROJECT		

(Waldron rd.)
20+26.17
38.8' RT

Illinois Department of Transportation
Division of Highways
Illinois Department of Transportation

SOIL BORING LOG

Page 1 of 1

Date 10/4/17

ROUTE I-57 (FAI 57) DESCRIPTION Waldron Road over I-57, 3.4 miles North of US 45/52 LOGGED BY Larry Myers

SECTION (46-3)R, HBK, 5HBR, 6HBR LOCATION SE 1/4, SEC. 4, TWP. 30N, RNG. 13W, 2nd PM, Latitude 41.107926, Longitude -87.835174

COUNTY Kankakee DRILLING METHOD Hollow Stem Auger HAMMER TYPE CME Automatic

STRUCT. NO. 046-0080 (EX)
Station 230+53.99 (EX)

BORING NO. B 218 (Pier)
Station 231+25.20
Offset 8.0 ft Lt.
Ground Surface Elev. 632.57 ft

Surface Water Elev. ____ ft
Stream Bed Elev. ____ ft

Groundwater Elev.:
First Encounter ____ ft
Upon Completion ____ ft
After ____ Hrs. ____ ft

	DEPTH (ft)	BLOWS (/6")	UCS Qu (tsf)	MOIST (%)
Augered Material - Not Documented	630.07			
Augered Approximately 30" into Rock Before Starting Core	627.57 -5			
Borehole continued with rock coring.	-10			
	-15			
	-20			

The Unconfined Compressive Strength (UCS) Failure Mode is indicated by (B-Bulge, S-Shear, P-Penetrometer)
The SPT (N value) is the sum of the last two blow values in each sampling zone (AASHTO T206)

BBS, form 137 (Rev. 8-99)

SOIL BORING I-57 & IL 17 INTERCHANGE.GPJ IL_DOT.GDT 2/5/18

(Waldron rd.)
20+26.17
38.8' RT

Illinois Department of Transportation
Division of Highways
Illinois Department of Transportation

ROCK CORE LOG

Page 1 of 1

Date 10/4/17

ROUTE I-57 (FAI 57) DESCRIPTION Waldron Road over I-57, 3.4 miles North of US 45/52 LOGGED BY Larry Myers

SECTION (46-3)R, HBK, 5HBR, 6HBR LOCATION SE 1/4, SEC. 4, TWP. 30N, RNG. 13W, 2nd PM, Latitude 41.107926, Longitude -87.835174

COUNTY Kankakee CORING METHOD Split Barrel Wire Line

STRUCT. NO. 046-0080 (EX)
Station 230+53.99 (EX)

CORING BARREL TYPE & SIZE N W/L 2
Core Diameter 1.9 in
Top of Rock Elev. 630.07 ft
Begin Core Elev. 627.57 ft

BORING NO. B 218 (Pier)
Station 231+25.20
Offset 8.0 ft Lt.
Ground Surface Elev. 632.57 ft

	DEPTH (ft)	CORE (#)	RECOVERY (%)	R.Q.D. (%)	CORE TIME (min/ft)	STRENGTH (tsf)
Dense Gray & Tan Limestone, Horizontal Fractures with Loose Joints	627.57	1	95	26	2.4	535.5 891.7
Some Vertical Fracturing @ 8.5'	622.57 -10					
Dense Gray Limrestone with Tight Joints, Oxidized Tan Color, Horzontal Fractures with some Vertical Fracturing	617.57 -15	2	100	45	3.2	839.7 770.5 696.5
Dense Gray Limrestone, some Horizontal Fractures with Tight Joirts	612.57 -20	3	100	87	2.8	817.2 1453.7 1077.7 1022.4 866.7 1086.6
End of Boring	-25					

Color pictures of the cores Yes
Cores will be stored for examination until Construction Complete
The "Strength" column represents the uniaxial compressive strength of the core sample (ASTM D-2938)

BBS, form 138 (Rev. 8-99)

ROCK CORE I-57 & IL 17 INTERCHANGE.GPJ IL_DOT.GDT 2/5/18

MODEL: 046O153-66997-051-054
FILE NAME: I:\jobs\2019\193.1901 PTB 192-011 District 3 Various Phase III Structure Projects\WO 2 - Waldron Road over I-57\Drawings\bridge substructure\Sheet\046O153-66997-051-054-BORINGS.dgn

3/11/2021 4:56:48 PM

Prairie Engineers, P.C.
www.prairieengineers.com
professional design firm no. 184-005965
© Copyright Prairie Engineers, P.C. 2018

USER NAME =	DESIGNED - SMA	REVISED -	
	CHECKED - CMF/TCD	REVISED -	
PLOT SCALE =	DRAWN - JLM	REVISED -	
PLOT DATE =	CHECKED - SMA	REVISED -	

STATE OF ILLINOIS
DEPARTMENT OF TRANSPORTATION

SOIL BORINGS
STRUCTURE NO. 046–0153
SHEET 53 OF 54 SHEETS

F.A.I. RTE.	SECTION	COUNTY	TOTAL SHEETS	SHEET NO.
57	139HBR-6	KANKAKEE	202	142
		CONTRACT NO. 66997		
	ILLINOIS FED. AID PROJECT			

(Waldron rd.)
21+78.11
24.4' LT

Illinois Department of Transportation
Division of Highways
IDOT

SOIL BORING LOG

Page 1 of 1

Date 9/12/13

ROUTE I-57 (FAI 57) DESCRIPTION Waldron Road over I-57, 3.4 miles North of US 45/52 LOGGED BY Larry Myers

SECTION (46-3)R, HBK, 5HBR, 6HBR LOCATION SE 1/4, SEC. 4, TWP. 30N, RNG. 13W, 2nd PM, Latitude 41.107686, Longitude -87.834655

COUNTY Kankakee DRILLING METHOD Hollow Stem Auger HAMMER TYPE CME Automatic

STRUCT. NO. 046-0080 (Exist.)
Station 230+53.99 (Exist.)

BORING NO. BH 71 (E. Abut.)
Station 232+11.23
Offset 148.3 ft Lt.
Ground Surface Elev. 647.42 ft

Surface Water Elev. ____ ft
Stream Bed Elev. ____ ft

Groundwater Elev.:
First Encounter Dry ft
Upon Completion Dry ft
After ____ Hrs. ____ ft

	DEPTH (ft)	BLOWS (/6")	UCS Qu (tsf)	MOIST (%)
Augered Shoulder Stone, Brown Silty Clay Loam Fill				
	644.92	3		
Hard Brown Silty Clay Loam Till		4	4.0	13
Fill		5	P	
	-5	3		
		2	4.0	17
		3	P	
	639.92	2		
Stiff to Very Stiff Brown Silty Clay/Silty Clay Loam		2	2.0	20
	637.92	2	P	
Stiff to Very Stiff Brown Silty Clay Loam Till	-10	2		
		2	1.5	26
		2	P	
	634.92	30		
Weathered & Reworked Dolomite Surface		15		9
	632.42 -15	12		
Dense Tan/Orange Dolomite	632.17	100/3"		
Auger Refusal				
End of Boring				
	-20			

The Unconfined Compressive Strength (UCS) Failure Mode is indicated by (B-Bulge, S-Shear, P-Penetrometer)
The SPT (N value) is the sum of the last two blow values in each sampling zone (AASHTO T206)

BBS, form 137 (Rev. 8-99)

SOIL BORING I-57 & IL 17 INTERCHANGE.GPJ IL_DOT.GDT 11/12/14

(Waldron rd.)
21+70.80
11.3' LT

Illinois Department of Transportation
Division of Highways
Illinois Department of Transportation

SOIL BORING LOG

Page 1 of 1

Date 9/8/17

ROUTE I-57 (FAI 57) DESCRIPTION Waldron Road over I-57, 3.4 miles North of US 45/52 LOGGED BY Larry Myers

SECTION (46-3)R, HBK, 5HBR, 6HBR LOCATION SE 1/4, SEC. 4, TWP. 30N, RNG. 13W, 2nd PM, Latitude 41.107696, Longitude -87.83471

COUNTY Kankakee DRILLING METHOD Hollow Stem Auger HAMMER TYPE CME Automatic

STRUCT. NO. 046-0080 (EX)
Station 230+53.99 (EX)

BORING NO. B 217 (S. Abut.)
Station 232+12.99
Offset 133.4 ft Lt.
Ground Surface Elev. 648.76 ft

Surface Water Elev. ____ ft
Stream Bed Elev. ____ ft

Groundwater Elev.:
First Encounter ____ ft
Upon Completion ____ ft
After ____ Hrs. ____ ft

	DEPTH (ft)	BLOWS (/6")	UCS Qu (tsf)	MOIST (%)
Augered Material - Not Documented				
	-5			
	-10			
	-15			
	632.76			
Borehole continued with rock coring.				
	-20			

The Unconfined Compressive Strength (UCS) Failure Mode is indicated by (B-Bulge, S-Shear, P-Penetrometer)
The SPT (N value) is the sum of the last two blow values in each sampling zone (AASHTO T206)

BBS, form 137 (Rev. 8-99)

SOIL BORING I-57 & IL 17 INTERCHANGE.GPJ IL_DOT.GDT 2/5/18

(Waldron rd.)
21+70.80
11.3' LT

Illinois Department of Transportation
Division of Highways
Illinois Department of Transportation

ROCK CORE LOG

Page 1 of 1

Date 9/8/17

ROUTE I-57 (FAI 57) DESCRIPTION Waldron Road over I-57, 3.4 miles North of US 45/52 LOGGED BY Larry Myers

SECTION (46-3)R, HBK, 5HBR, 6HBR LOCATION SE 1/4, SEC. 4, TWP. 30N, RNG. 13W, 2nd PM, Latitude 41.107696, Longitude -87.83471

COUNTY Kankakee CORING METHOD Split Barrel Wire Line

STRUCT. NO. 046-0080 (EX)
Station 230+53.99 (EX)

BORING NO. B 217 (S. Abut.)
Station 232+12.99
Offset 133.4 ft Lt.
Ground Surface Elev. 648.76 ft

CORING BARREL TYPE & SIZE N W/L 2
Core Diameter 1.9 in
Top of Rock Elev. 632.76 ft
Begin Core Elev. 632.76 ft

	DEPTH (ft)	CORE (#)	RECOVERY (%)	R.Q.D. (%)	CORE TIME (min/ft)	STRENGTH (tsf)
Tan Dolostone Highly Horizontally Fractured with most Seams Filled with Weathered Shale, Loose Joints	632.76	1	90	0	2.4	
	-20					
	627.76					
Tan to Gray Dolostone - Horizontally Fractured with Loose Joints, some Vertical Fractures		2	90	48	3	711.3
						766.8
						761.6
	-25					655.0
	622.76					798.9
Gray Limestone with some Loose Horizontal Fracturing and Heavy Vertical Fracturing, Horizontal Joints are Oxidized Tan Color		3	100	22	2.8	
						875.5
						691.3
	-30					
	617.76					
End of Boring						
	-35					

Color pictures of the cores Yes
Cores will be stored for examination until Construction Complete
The "Strength" column represents the uniaxial compressive strength of the core sample (ASTM D-2938)

BBS, form 138 (Rev. 8-99)

ROCK CORE I-57 & IL 17 INTERCHANGE.GPJ IL_DOT.GDT 2/5/18

MODEL: 046015-66997-051-054
FILE NAME: I:\jobs\2019\193.1901 PTB 192-011 District 3 Various Phase III Structure Projects\WO 2 - Waldron Road over I-57\Drawings\bridge substructure\Sheet\046015-66997-051-054-BORINGS.dgn

3/11/2021 4:57:19 PM

Prairie Engineers, P.C.
www.prairieengineers.com
professional design firm no. 184-005965
© Copyright Prairie Engineers, P.C. 2018

USER NAME =	DESIGNED - SMA	REVISED -	
	CHECKED - CMF/TCD	REVISED -	
PLOT SCALE =	DRAWN - JLM	REVISED -	
PLOT DATE =	CHECKED - SMA	REVISED -	

STATE OF ILLINOIS
DEPARTMENT OF TRANSPORTATION

SOIL BORINGS
STRUCTURE NO. 046–0153
SHEET 54 OF 54 SHEETS

F.A.I. RTE.	SECTION	COUNTY	TOTAL SHEETS	SHEET NO.
57	139HBR-6	KANKAKEE	202	143
		CONTRACT NO. 66997		
		ILLINOIS FED. AID PROJECT		

Bench Mark: BM4 Cut square on North Headwall at entrance to Faith Reformed Church located at 2400 Waldron Road. El. 634.41 Traffic to be maintained utilizing staged construction coordinated with bridge construction.

INDEX OF SHEETS

1. General Plan & Elevation Retaining Wall A
2. General Plan & Elevation Retaining Wall B
3. General Notes, Sequence of Construction, & Total Bill of Material
4–7. Wall A Plan and Enlarged Elevations
8–9. Wall A Table of Pile Lengths and Elevations, Bill of Material
10–12. Wall B Plan and Enlarged Elevations
13. Wall B Table of Pile Lengths and Elevations, Bill of Material
14. Soldier Pile Wall Sections
15. Shear Stud Connector Layout
16–21. Wall A Soil Borings
22–23. Wall B Soil Borings

DESIGN SPECIFICATIONS

2017 AASHTO LRFD Bridge Design Specifications, 8th Edition

DESIGN STRESSES

FIELD UNITS

f'c = 3,500 psi (Cast-In-Place Facing & Soldier Pile Encasement)
fy = 60,000 psi (Reinforcement)
fy = 50,000 psi (AASHTO M270 Gr. 50) (Soldier Piles)

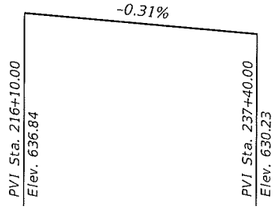

PROFILE GRADE I-57

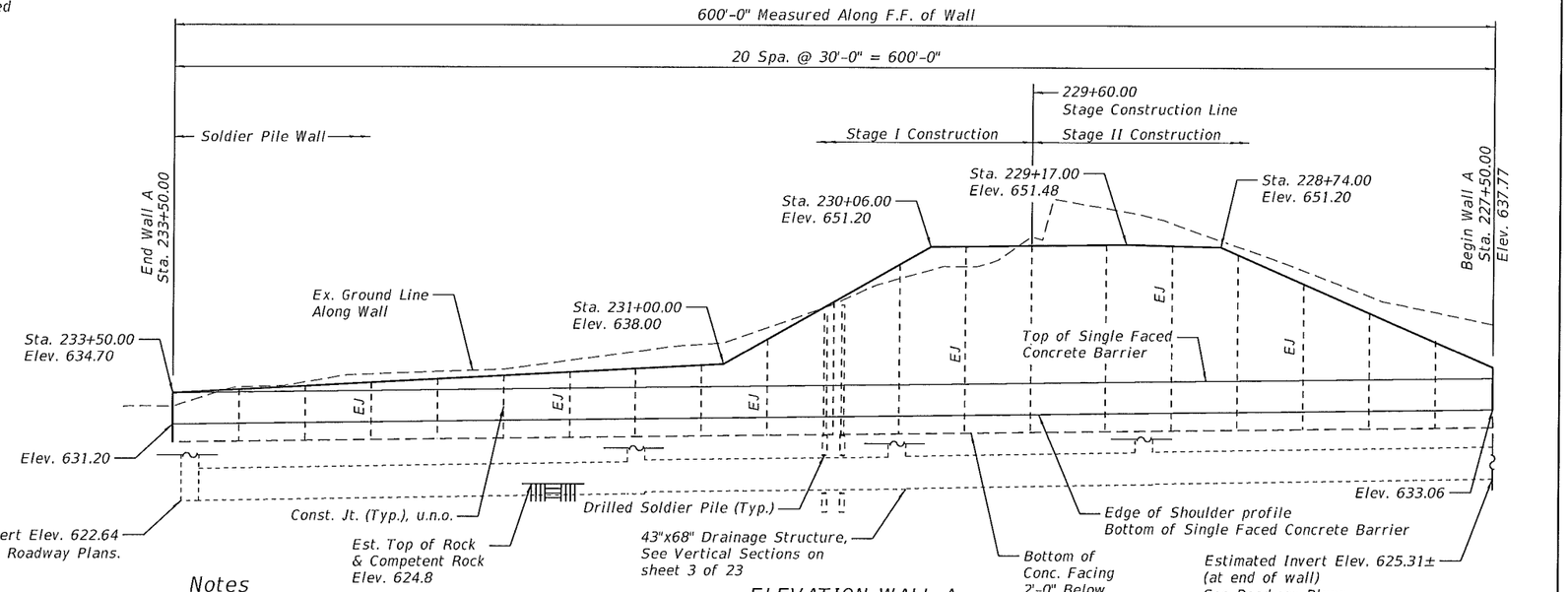

ELEVATION WALL A

(Looking West at Front Face of Wall)

Notes

1. Stations and offsets are measured along ℄ of I-57 to the front face of panels.
2. F.F. denotes front face.
3. B.F. denotes back face.
4. See Highway Plans for Concrete Barrier, Guardrails, and Transitions.

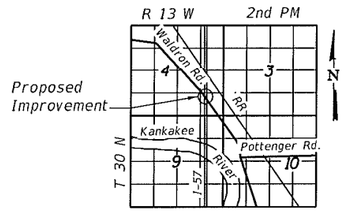

LOCATION SKETCH

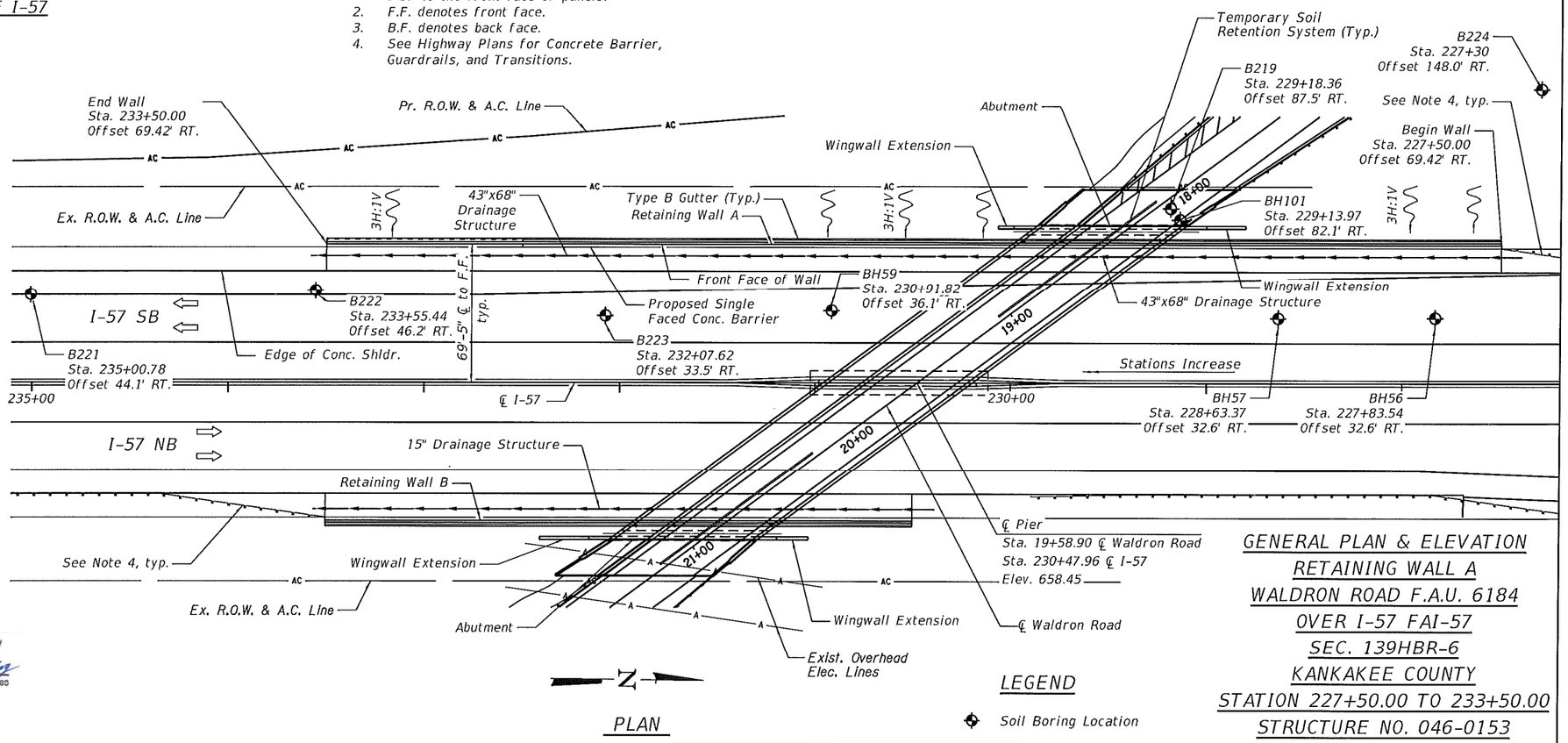

PLAN

LEGEND

Soil Boring Location

GENERAL PLAN & ELEVATION RETAINING WALL A WALDRON ROAD F.A.U. 6184 OVER I-57 FAI-57 SEC. 139HBR-6 KANKAKEE COUNTY STATION 227+50.00 TO 233+50.00 STRUCTURE NO. 046-0153

ROBERT H. CURTIS
081-004518
LICENSED
STRUCTURAL
ENGINEER
STATE OF ILLINOIS

Robert H. Curtis 3-18-2021
Robert H. Curtis
Exp: 11/30/2022

APPROVED
For Structural Adequacy Only
Engineer of Bridges & Structures

Prairie Engineers, P.C.
www.prairieengineers.com
professional design firm no. 184-005965

© Copyright Prairie Engineers, P.C. 2020

USER NAME =	DESIGNED - RHC	REVISED -	
	CHECKED - CMF	REVISED -	
PLOT SCALE =	DRAWN - JLM	REVISED -	
PLOT DATE =	CHECKED - SMA	REVISED -	

STATE OF ILLINOIS
DEPARTMENT OF TRANSPORTATION

GENERAL PLAN & ELEVATION RETAINING WALL A
STRUCTURE NO. 046-0153
SHEET 1 OF 23 SHEETS

F.A.I. RTE.	SECTION	COUNTY	TOTAL SHEETS	SHEET NO.
57	139HBR-6	KANKAKEE	202	144
		CONTRACT NO. 66997		
	ILLINOIS	FED. AID PROJECT		

MODEL: 0460153-66997-001
FILE NAME: I:\Jobs\2019\193.1901 PTB 192-011 District 3 Various Phase III Structure Projects\WO 2 - Waldron Road over I-57\Drawings\wall A\Sheet\0460153-66997-001-wall A GPE.dgn
3/18/2021 2:03:53 PM

Bench Mark: BM4 Cut square on North Headwall at entrance to Faith Reformed Church located at 2400 Waldron Road. El. 634.41 Traffic to be maintained utilizing staged construction coordinated with bridge construction.

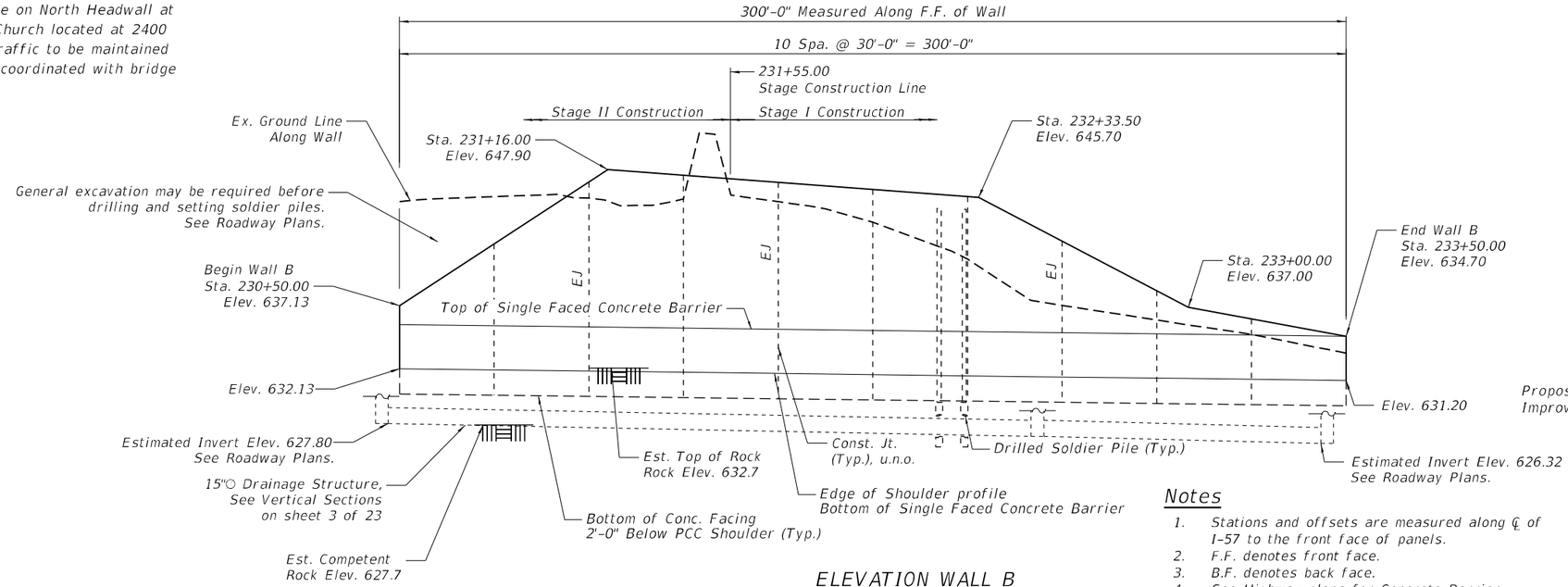

DESIGN SPECIFICATIONS

2017 AASHTO LRFD Bridge Design Specifications, 8th Edition

DESIGN STRESSES

FIELD UNITS

f'c = 3,500 psi (Cast-In-Place Facing & Soldier Pile Encasement)
fy = 60,000 psi (Reinforcement)
fy = 50,000 psi (AASHTO M270 Gr. 50) (Soldier Pile)

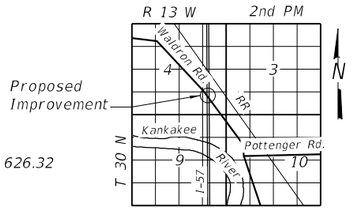

LOCATION SKETCH

Notes

1. Stations and offsets are measured along ℄ of I-57 to the front face of panels.
2. F.F. denotes front face.
3. B.F. denotes back face.
4. See Highway plans for Concrete Barrier, Guardrail, and Transitions.

ELEVATION WALL B

(Looking East at Front Face of Wall)

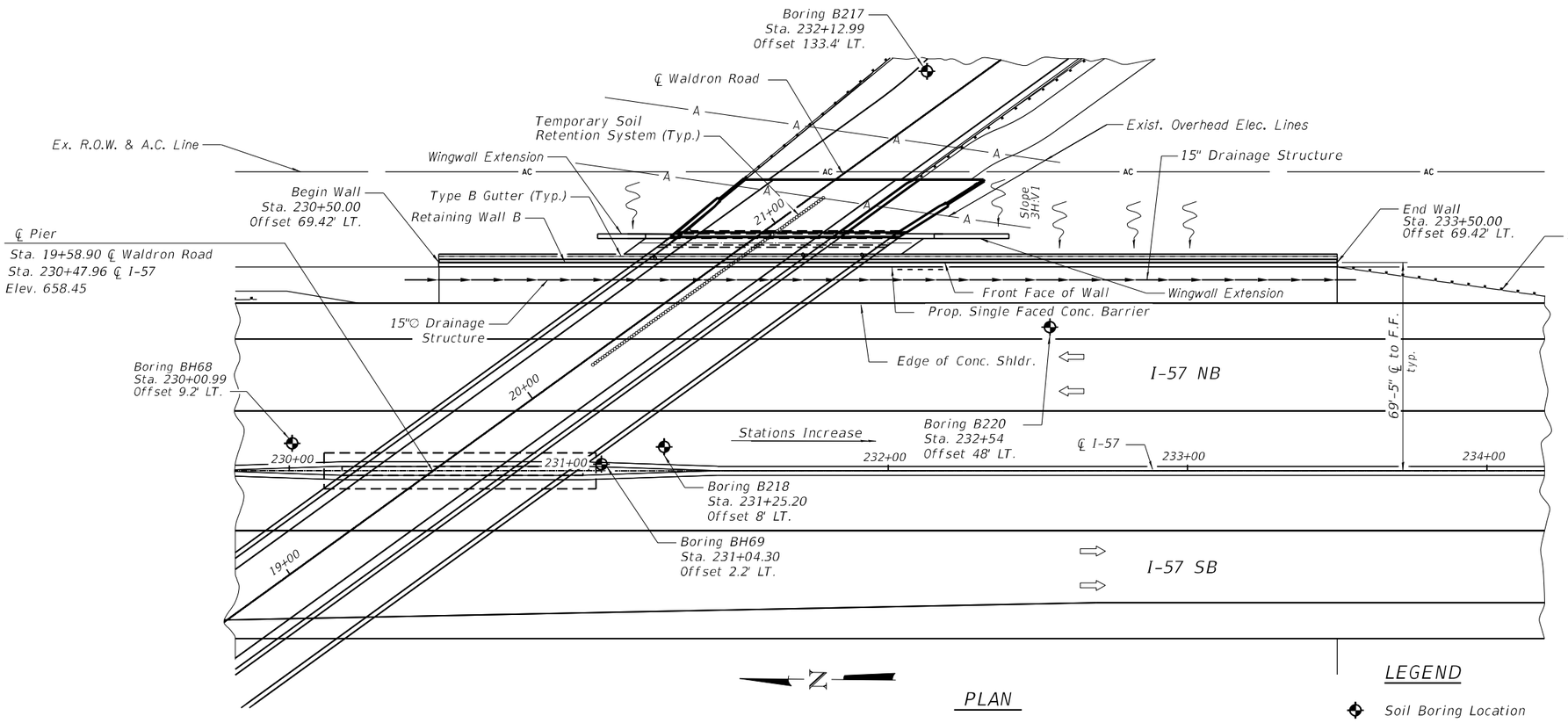

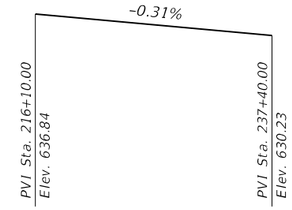

PROFILE GRADE I-57

LEGEND

Soil Boring Location

GENERAL PLAN & ELEVATION
RETAINING WALL B
WALDRON ROAD F.A.U. 6184
OVER I-57 FAI-57
SEC. 139HBR-6
KANKAKEE COUNTY
STATION 230+50.00 TO 233+50.00
STRUCTURE NO. 046-0153

Prairie Engineers, P.C.
www.prairieengineers.com
professional design firm no. 184-005965

© Copyright Prairie Engineers, P.C. 2020

USER NAME =	DESIGNED - RHC	REVISED -
	CHECKED - CMF	REVISED -
PLOT SCALE =	DRAWN - JLM	REVISED -
PLOT DATE =	CHECKED - SMA	REVISED -

STATE OF ILLINOIS
DEPARTMENT OF TRANSPORTATION

GENERAL PLAN & ELEVATION RETAINING WALL B
STRUCTURE NO. 046-0153
SHEET 2 OF 23 SHEETS

F.A.I. RTE.	SECTION	COUNTY	TOTAL SHEETS	SHEET NO.
57	139HBR-6	KANKAKEE	202	145
		CONTRACT NO. 66997		
	ILLINOIS	FED. AID PROJECT		

MODEL: 0460153-66997-002
FILE NAME: I:\Jobs\2019\193.1901 PTB 192 011 District 3 Various Phase III Structure Projects\W0 2 - Waldron Road over I-57\Drawings\wall B\Sheet\0460153-66997-002_wall B GPE.dgn
3/18/2021 3:58:08 PM

SN 046-0153 SEQUENCE OF WORK

Stage I

1. Erect Waldron Road Stage I traffic control, install temporary soil retention systems behind existing abutments, and remove stage I superstructure and roadway.
2. Erect I-57 Stage I traffic control, remove Stage I of existing middle pier, and construct Stage I of new median pier.
3. Set Stage I soldier piles for Walls A & B.
4. Remove top block of existing abutments down to top of buttresses while installing timber lagging for the soldier pile walls. (The bottom of the "existing block" at the north abutment will be 2" +/- higher than the bottom of the proposed north abutment. The bottom of the "existing block" at the south abutment will be 4" +/- lower than the bottom of the proposed south abutment.)
5. Construct Stage I work for new abutments.
6. Construct Stage I superstructure and approach pavements. (The bottom of the proposed girders will be above the top of pier elevation of the existing outside piers.)

Stage II

1. Erect Waldron Road Stage II traffic control and remove stage II superstructure and roadway.
2. Maintain I-57 Stage I traffic control, remove Stage II of existing middle pier, and construct Stage II of new median pier.
3. Set Stage II soldier piles for Walls A & B.
4. Remove top block of existing abutments down to top of buttresses while installing timber lagging for the soldier pile walls.
5. Construct Stage II work for new abutments.
6. Erect I-57 Stage II traffic control and remove existing outside piers.
7. Remove remainder of existing abutments while installing timber lagging for the soldier pile walls and removing soil between the new soldier pile wall and the existing outside piers.
8. Pour facing for soldier pile walls.
9. Construct Stage II superstructure and approach pavements.

Stage III

1. Erect Waldron Road Stage III traffic control.
2. Construct barrier wall between roadway and shared use path.
3. Install Bridge Fence Railing on outside parapet.
4. Open Waldron Road to normal traffic and continue I-57 work below the bridge. (i.e., storm sewers parallel to soldier pile walls.)

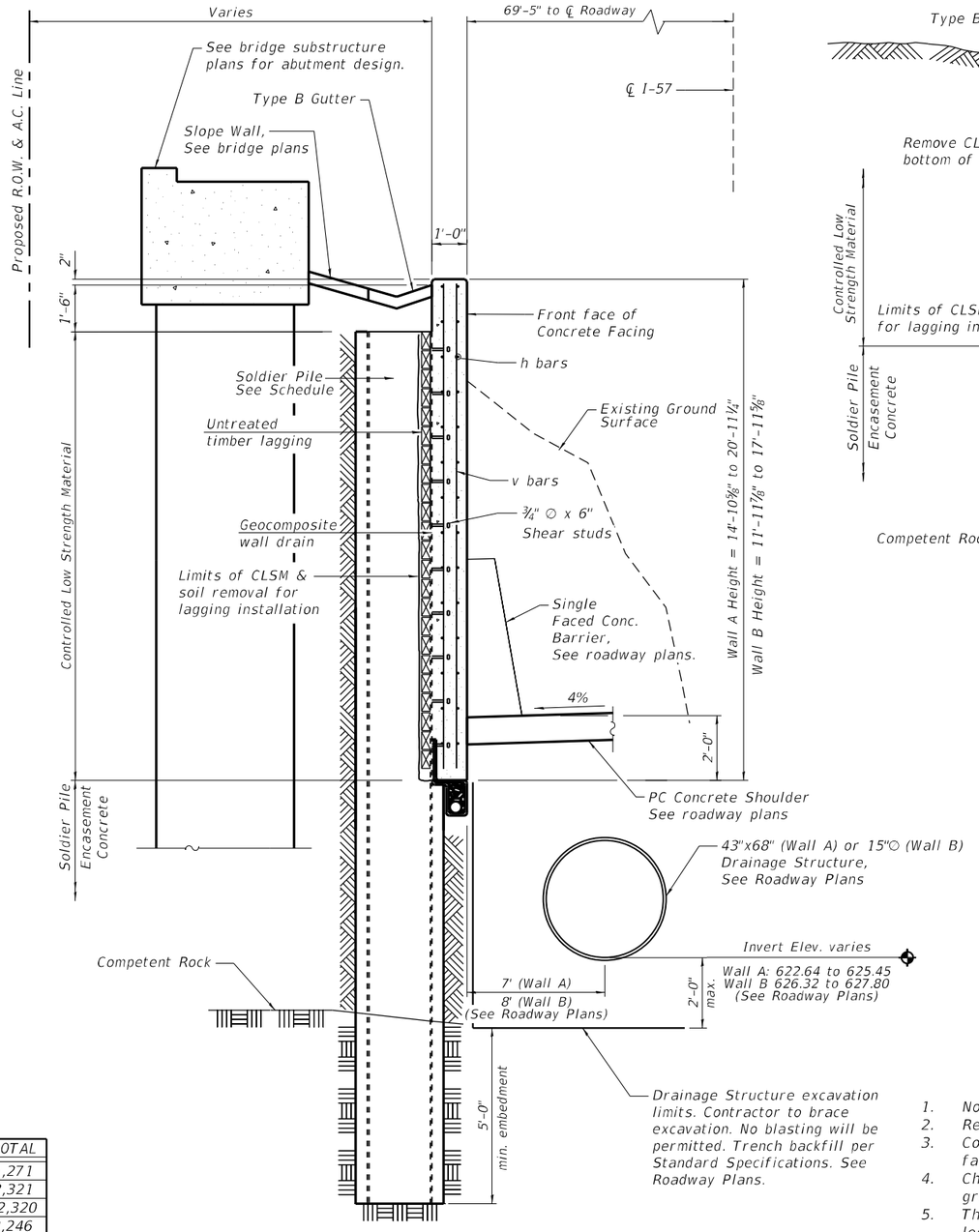

VERTICAL SECTION THRU DRILLED SOLDIER PILE WALL WITH TYPE "B" GUTTER

Wall A Sta. 228+40 to 230+50
Wall B Sta. 230+80 to 232+60

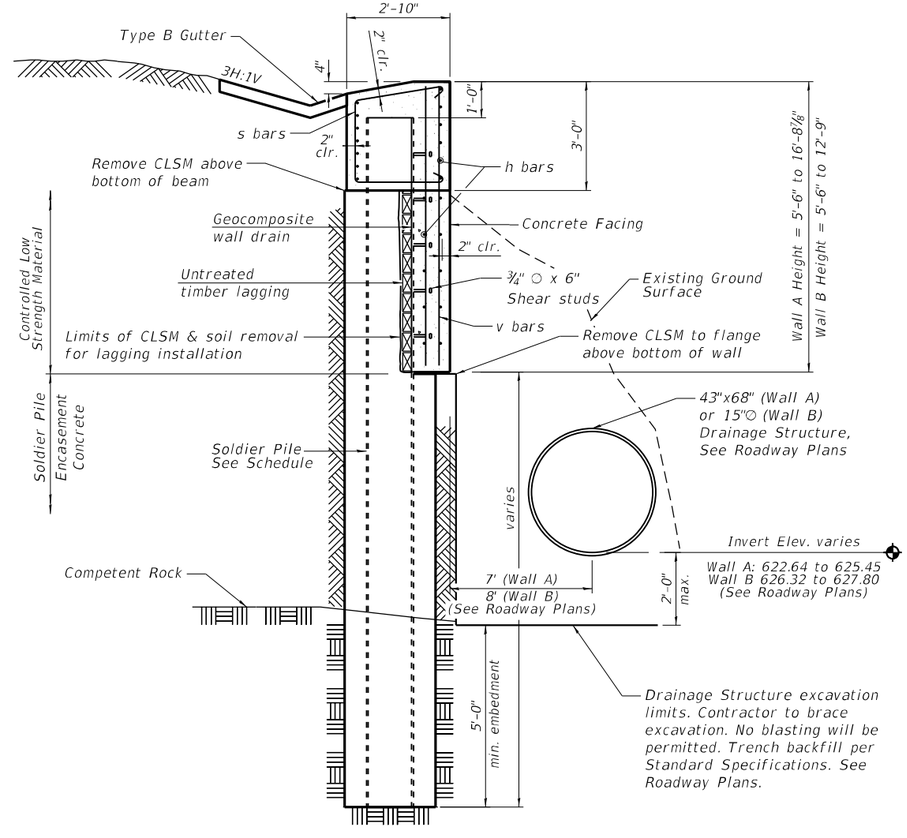

VERTICAL SECTION THRU DRILLED SOLDIER PILE WALL WITH BEAM

Wall A Sta. 227+50 to 228+40 & Sta. 230+50 to 233+50
Wall B Sta. 230+50 to 230+80 & Sta. 232+60 to 233+50

TOTAL BILL OF MATERIAL

ITEM	UNIT	Wall A	Wall B	TOTAL
Structure Excavation	Cu. Yd.	833	438	1,271
Stud Shear Connectors	Each	1,615	706	2,321
Reinforcement Bars, Epoxy Coated	Pound	52,950	29,370	82,320
Furnishing Soldier Piles (W Section)	Foot	2,390	856	3,246
Drilling and Setting Soldier Piles (In Soil)	Cu. Ft.	8,739	1,987	10,726
Drilling and Setting Soldier Piles (In Rock)	Cu. Ft.	3,593	2,488	6,081
Untreated Timber Lagging	Sq. Ft.	6,234	3,345	9,579
Concrete Structures	Cu. Yd.	277.6	146.2	423.8
Concrete Sealer	Sq. Ft.	8,395	4,398	12,793
Geocomposite Wall Drain	Sq. Yd.	473	266	739
Pipe Underdrains for Structures 4 inch	Foot	660	360	1,020

GENERAL NOTES

1. No field welding is permitted except as specified in the contract documents.
2. Reinforcement bars designated (E) shall be epoxy coated.
3. Concrete Sealer shall be applied to all exposed surfaces of the wall, including front face, top and exposed back face, and shall extend 1'-0" minimum below finished grade.
4. Chamfers on vertical surfaces shall be continued a minimum of 2'-0" below finished ground level.
5. The Contractor is responsible for the design and performance of the lagging using no less than 3" nominal rough sawn thickness and timber with an allowable bending stress of 1000 psi.
6. A cantilevered sheet piling design does not appear feasible and additional members or other retention systems may be necessary. The Contractor shall submit a temporary soil retention system design including plan details and calculations for review and acceptance by the Engineer. See bridge plans for S.N. 046-0153 for additional details regarding Temporary Soil Retention Systems including quantity. A single design shall be used for construction of the Bridge and Walls A and B. Connection of retention system to the soldier pile walls if required shall be coordinated in the design.

MODEL: 0460153-66997-003
FILE NAME: I:\Jobs\2019\193.1901 PTB 192-011 District 3 Various Phase III Structure Projects\WO 2 - Waldron Road over I-57\Drawings\wall A\Sheet\0460153-66997-003-wall A General Notes.dgn
3/18/2021 3:29:29 PM

Prairie Engineers, P.C.
www.prairieengineers.com
professional design firm no. 184-005965
© Copyright Prairie Engineers, P.C. 2020

USER NAME = _____	DESIGNED - RHC	REVISED - _____	
	CHECKED - CMF	REVISED - _____	
PLOT SCALE = _____	DRAWN - JLM	REVISED - _____	
PLOT DATE = _____	CHECKED - SMA	REVISED - _____	

STATE OF ILLINOIS
DEPARTMENT OF TRANSPORTATION

GENERAL NOTES, SEQUENCE OF CONSTRUCTION, & TOTAL BILL OF MATERIAL
STRUCTURE NO. 046-0153
SHEET 3 OF 23 SHEETS

F.A.I. RTE.	SECTION	COUNTY	TOTAL SHEETS	SHEET NO.
57	139HBR-6	KANKAKEE	202	146
		CONTRACT NO. 66997		
		ILLINOIS	FED. AID PROJECT	

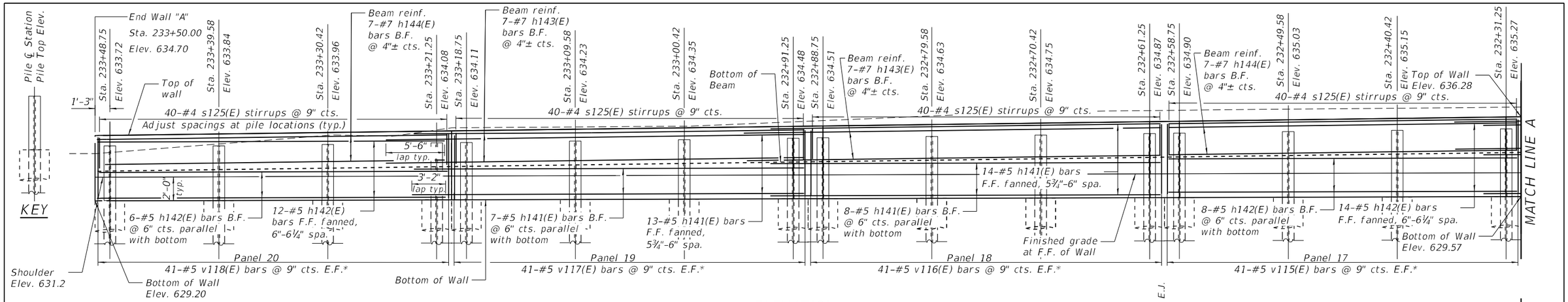

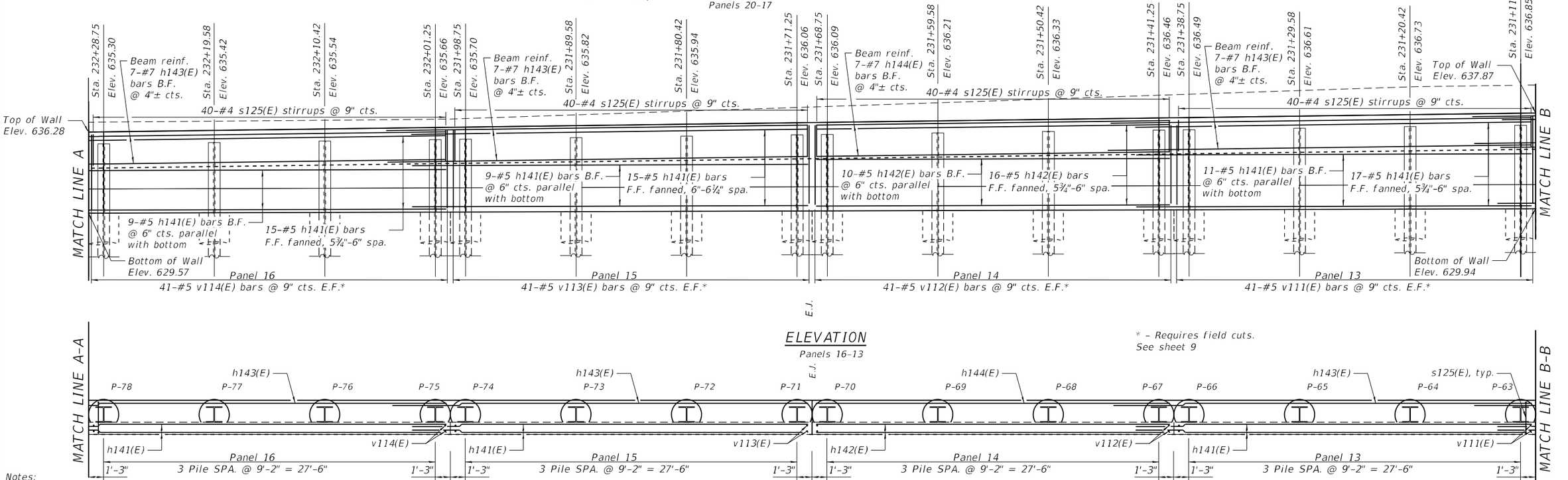

* - Requires field cuts.
See sheet 9

Notes:
F.F. = Front Face
B.F. = Back Face
See sheets 8 & 9 of 23 for Pile Sizes, Elevations, Lengths, Shoulder Elevations, Base of Wall Elevations, and Field Cutting Diagram.
See sheets 14-15 of 23 for Sections and Details. See sheet 5 of 23 for S bar details.

MINIMUM BAR LAP
#5 bar = 3'-2"
#7 bar = 5'-6"

Prairie Engineers, P.C.
www.prairieengineers.com
professional design firm no. 184-005965

© Copyright Prairie Engineers, P.C. 2020

USER NAME =	DESIGNED - RHC	REVISED -	
	CHECKED - CMF	REVISED -	
PLOT SCALE =	DRAWN - JLM	REVISED -	
PLOT DATE =	CHECKED - SMA	REVISED -	

STATE OF ILLINOIS
DEPARTMENT OF TRANSPORTATION

WALL A PLAN AND ENLARGED ELEVATIONS
STRUCTURE NO. 046-0153
SHEET 4 OF 23 SHEETS

F.A.I. RTE.	SECTION	COUNTY	TOTAL SHEETS	SHEET NO.
57	139HBR-6	KANKAKEE	202	147
		CONTRACT NO. 66997		
		ILLINOIS	FED. AID PROJECT	

MODEL: 046O153-66997-004
FILE NAME: I:\Jobs\2019\193.1901 PTB 192-011 District 3 Various Phase III Structure Projects\WO 2 - Waldron Road over I-57\Drawings\wall A\Sheet\046O153-66997-wall A Plan-sheets.dgn

3/18/2021 3:31:13 PM

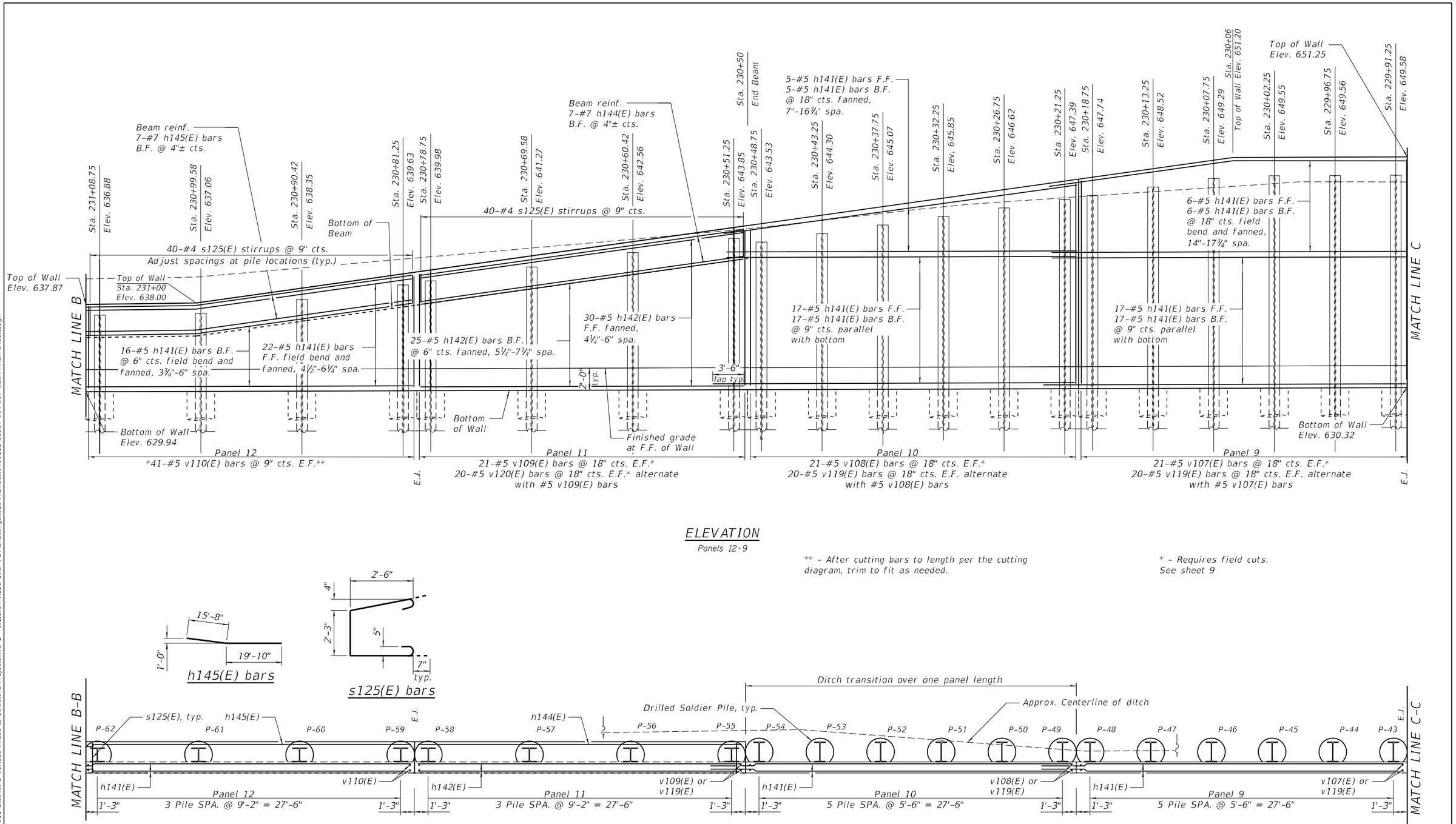

ELEVATION

Panels 12-9

** - After cutting bars to length per the cutting diagram, trim to fit as needed.

* - Requires field cuts. See sheet 9

h145(E) bars

s125(E) bars

Notes:
- F.F. = Front Face
- B.F. = Back Face
- See sheets 8 & 9 of 23 for Pile Sizes, Elevations, Lengths, Shoulder Elevations, Base of Wall Elevations, and Field Cutting Diagram.
- See sheets 14-15 of 23 for Sections and Details. See sheet 5 of 23 for S bar details.

PLAN

Panels 12-9

MINIMUM BAR LAP

#5 bar = 3'-2"
#7 bar = 5'-6"

Prairie Engineers, P.C.
www.prairieengineers.com
professional design firm no. 184-005965
© Copyright Prairie Engineers, P.C. 2020

USER NAME =	DESIGNED - RHC	REVISED -	
	CHECKED - CMF	REVISED -	
PLOT SCALE =	DRAWN - JLM	REVISED -	
PLOT DATE =	CHECKED - SMA	REVISED -	

STATE OF ILLINOIS
DEPARTMENT OF TRANSPORTATION

WALL A PLAN AND ENLARGED ELEVATIONS
STRUCTURE NO. 046-0153

SHEET 5 OF 23 SHEETS

F.A.I. RTE.	SECTION	COUNTY	TOTAL SHEETS	SHEET NO.
57	139HBR-6	KANKAKEE	202	148
		CONTRACT NO. 66997		
	ILLINOIS FED. AID PROJECT			

MODEL: 046015-66997-005
FILE NAME: i:\jobs\2019\193.1901 PTB 192-011 District 3 Various Phase III Structure Projects\WO 2 - Waldron Road over I-57\Drawings\wall A\Sheet\046015-66997-004-007-wall A Plan-sheets.dgn
3/18/2021 3:39:47 PM

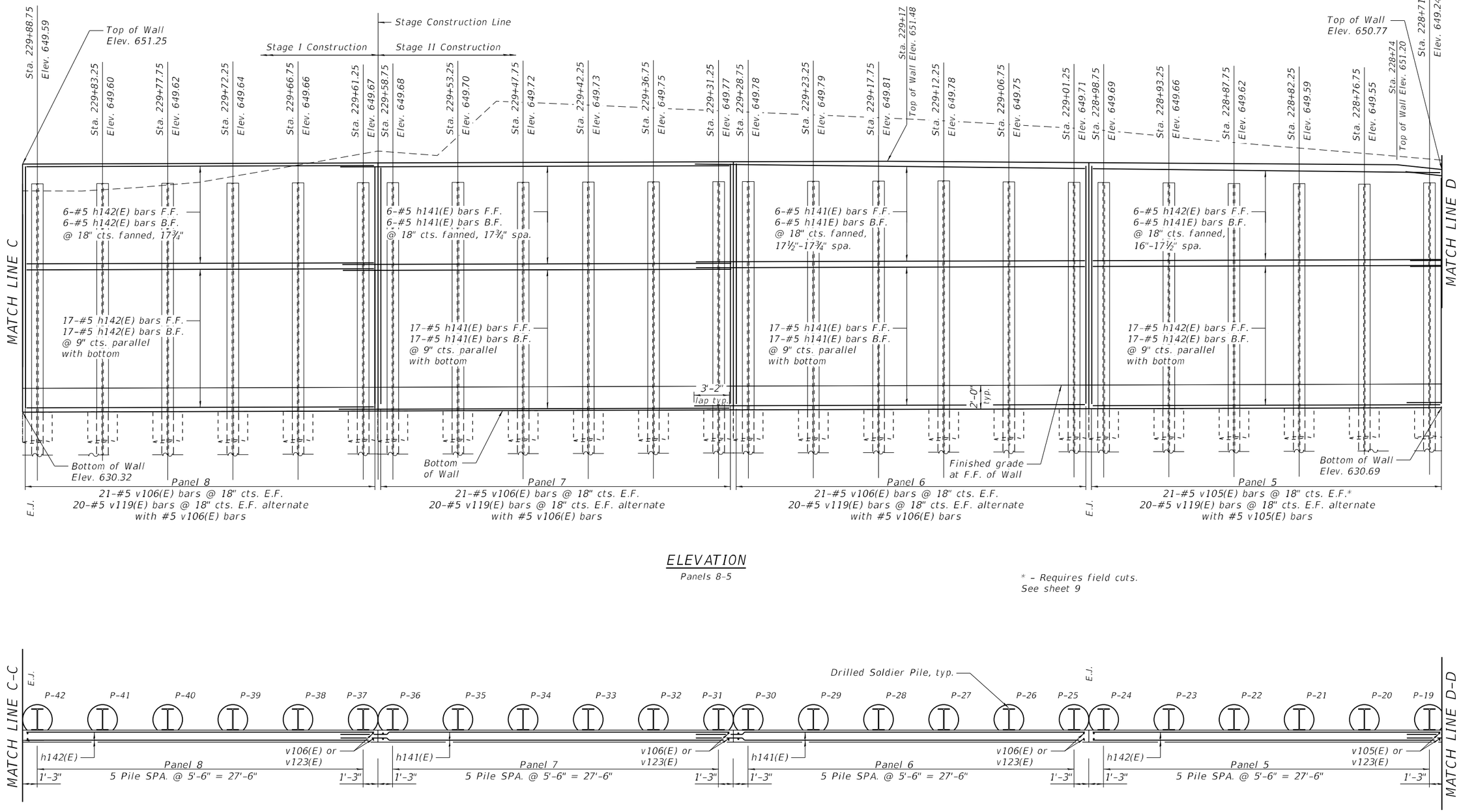

ELEVATION

Panels 8-5

* - Requires field cuts.
See sheet 9

Notes:
F.F. = Front Face
B.F. = Back Face
See sheets 8 & 9 of 23 for Pile Sizes, Elevations, Lengths, Shoulder Elevations, Base of Wall Elevations, and Field Cutting Diagram.
See sheets 14-15 of 23 for Sections and Details. See sheet 5 of 23 for S bar details.

PLAN

Panels 8-5

MINIMUM BAR LAP

#5 bar = 3'-2"

Prairie Engineers, P.C. www.prairieengineers.com professional design firm no. 184-005965 © Copyright Prairie Engineers, P.C. 2020	USER NAME =	DESIGNED - RHC	REVISED -	**STATE OF ILLINOIS DEPARTMENT OF TRANSPORTATION**	**WALL A PLAN AND ENLARGED ELEVATIONS STRUCTURE NO. 046-0153**
		CHECKED - CMF	REVISED -		
	PLOT SCALE =	DRAWN - JLM	REVISED -		SHEET 6 OF 23 SHEETS
	PLOT DATE =	CHECKED - SMA	REVISED -		

F.A.I. RTE.	SECTION	COUNTY	TOTAL SHEETS	SHEET NO.
57	139HBR-6	KANKAKEE	202	149
		CONTRACT NO. 66997		
	ILLINOIS	FED. AID PROJECT		

MODEL: 0460153-66997-006
FILE NAME: I:\jobs\2019\193.1901 PTB 192-011 District 3 Various Phase III Structure Projects\WO 2 - Waldron Road over I-57\Drawings\wall A\Sheet\0460153-66997-004-007-wall A Plan-sheets.dgn

3/18/2021 3:36:14 PM

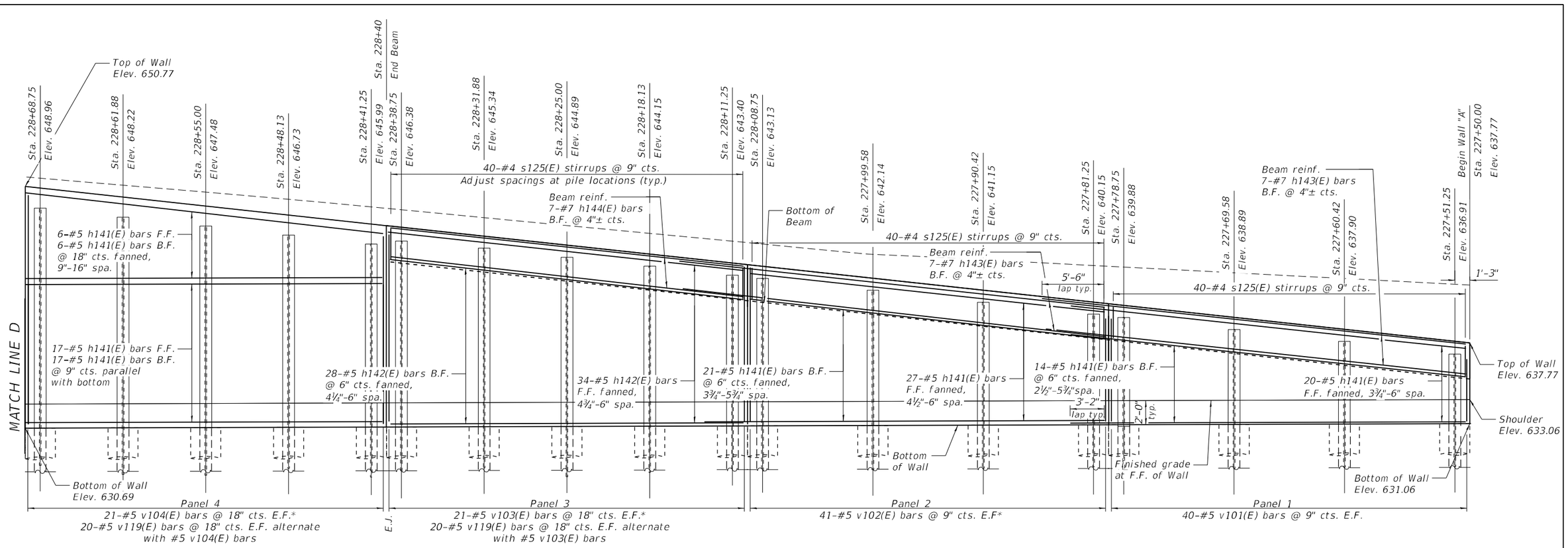

ELEVATION
Panels 4-1

* - Requires field cuts.
See sheet 9

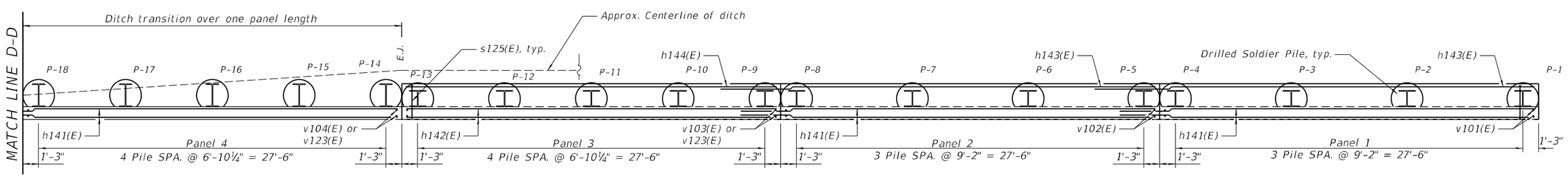

Notes:
F.F. = Front Face
B.F. = Back Face
See sheets 8 & 9 of 23 for Pile Sizes, Elevations, Lengths, Shoulder Elevations, Base of Wall Elevations, and Field Cutting Diagram.
See sheets 14-15 of 23 for Sections and Details. See sheet 5 of 23 for S bar details.

PLAN
Panels 4-1

MINIMUM BAR LAP
#5 bar = 3'-2"
#7 bar = 5'-6"

Prairie Engineers, P.C.
www.prairieengineers.com
professional design firm no. 184-005965
© Copyright Prairie Engineers, P.C. 2020

USER NAME =	DESIGNED - RHC	REVISED -	
	CHECKED - CMF	REVISED -	
PLOT SCALE =	DRAWN - JLM	REVISED -	
PLOT DATE =	CHECKED - SMA	REVISED -	

STATE OF ILLINOIS
DEPARTMENT OF TRANSPORTATION

WALL A PLAN AND ENLARGED ELEVATIONS
STRUCTURE NO. 046-0153
SHEET 7 OF 23 SHEETS

F.A.I. RTE.	SECTION	COUNTY	TOTAL SHEETS	SHEET NO.
57	139HBR-6	KANKAKEE	202	150
		CONTRACT NO. 66997		
	ILLINOIS FED. AID PROJECT			

MODEL: 046015-66997-007
FILE NAME: I:\jobs\2019\193.1901 PTB 192-011 District 3 Various Phase III Structure Projects\WO 2 - Waldron Road over I-57\Drawings\wall A\Sheet\046015-66997-004-007-wall A Plan-sheets.dgn
3/18/2021 3:37:54 PM

SOLDIER PILE NUMBER	SOLDIER PILE STATION	OFFSET	EDGE OF SHOULDER ELEVATION	TOP OF PILE ELEVATION	TOP OF WALL ELEVATION	BOTTOM OF WALL ELEVATION	SECTION	HOLE DIAMETER	ESTIMATED ROCK ELEVATION	BOTTOM OF TRENCH	ESTIMATED PILE TIP ELEVATION	ESTIMATED SOLDIER PILE LENGTH
		(FEET)	(FEET)	(FEET)	(FEET)	(FEET)			(FEET)	(FEET)	(FEET)	(FEET)
P-1	227+51.25	71.07 RT	633.06	636.91	637.91	631.06	W14X193	2'-6"	624.8	623.29	618.29	18.62
P-2	227+60.42	71.07 RT	633.03	637.90	638.90	631.03	W14X193	2'-6"	624.8	623.25	618.25	19.65
P-3	227+69.58	71.07 RT	633.00	638.89	639.89	631.00	W14X193	2'-6"	624.8	623.21	618.21	20.68
P-4	227+78.75	71.07 RT	632.97	639.88	640.88	630.97	W14X193	2'-6"	624.8	623.18	618.18	21.71
P-5	227+81.25	71.07 RT	632.96	640.15	641.15	630.96	W14X193	2'-6"	624.8	623.17	618.17	21.99
P-6	227+90.42	71.07 RT	632.93	641.15	642.15	630.93	W14X193	2'-6"	624.8	623.13	618.13	23.02
P-7	227+99.58	71.07 RT	632.91	642.14	643.14	630.91	W14X193	2'-6"	624.8	623.09	618.09	24.05
P-8	228+08.75	71.07 RT	632.88	643.13	644.13	630.88	W14X193	2'-6"	624.8	623.06	618.06	25.08
P-9	228+11.25	71.07 RT	632.87	643.40	644.40	630.87	W14X193	2'-6"	624.8	623.05	618.05	25.36
P-10	228+18.13	71.07 RT	632.85	644.15	645.15	630.85	W14X193	2'-6"	624.8	623.02	618.02	26.13
P-11	228+25.00	71.07 RT	632.83	644.89	645.89	630.83	W14X193	2'-6"	624.8	622.99	617.99	26.90
P-12	228+31.88	71.07 RT	632.81	645.64	646.64	630.81	W14X193	2'-6"	624.8	622.96	617.96	27.68
P-13	228+38.75	71.07 RT	632.78	646.38	647.38	630.78	W14X193	2'-6"	624.8	622.94	617.94	28.45
P-14	228+41.25	71.33 RT	632.78	645.99	647.65	630.78	W18X283	2'-6"	624.8	622.93	617.93	28.06
P-15	228+48.13	71.33 RT	632.76	646.73	648.40	630.76	W18X283	2'-6"	624.8	622.90	617.90	28.83
P-16	228+55.00	71.33 RT	632.73	647.48	649.14	630.73	W18X283	2'-6"	624.8	622.87	617.87	29.61
P-17	228+61.88	71.33 RT	632.71	648.22	649.89	630.71	W18X283	2'-6"	624.8	622.84	617.84	30.38
P-18	228+68.75	71.33 RT	632.69	648.96	650.63	630.69	W18X283	2'-6"	624.8	622.82	617.82	31.15
P-19	228+71.25	71.33 RT	632.68	649.24	650.90	630.68	W18X283	2'-6"	624.8	622.81	617.81	31.43
P-20	228+76.75	71.33 RT	632.67	649.55	651.22	630.67	W18X283	2'-6"	624.8	622.78	617.78	31.77
P-21	228+82.25	71.33 RT	632.65	649.59	651.25	630.65	W18X283	2'-6"	624.8	622.76	617.76	31.83
P-22	228+87.75	71.33 RT	632.63	649.62	651.29	630.63	W18X283	2'-6"	624.8	622.74	617.74	31.88
P-23	228+93.25	71.33 RT	632.62	649.66	651.33	630.62	W18X283	2'-6"	624.8	622.72	617.72	31.94
P-24	228+98.75	71.33 RT	632.60	649.69	651.36	630.60	W18X283	2'-6"	624.8	622.70	617.70	32.00
P-25	229+01.25	71.33 RT	632.59	649.71	651.38	630.59	W18X283	2'-6"	624.8	622.68	617.68	32.03
P-26	229+06.75	71.33 RT	632.57	649.75	651.41	630.57	W18X283	2'-6"	624.8	622.64	617.64	32.11
P-27	229+12.25	71.33 RT	632.56	649.78	651.45	630.56	W18X283	2'-6"	624.8	622.60	617.60	32.18
P-28	229+17.75	71.33 RT	632.54	649.81	651.48	630.54	W18X283	2'-6"	624.8	622.56	617.56	32.25
P-29	229+23.25	71.33 RT	632.52	649.79	651.46	630.52	W18X283	2'-6"	624.8	622.52	617.52	32.27
P-30	229+28.75	71.33 RT	632.51	649.78	651.44	630.51	W18X283	2'-6"	624.8	622.48	617.48	32.30
P-31	229+31.25	71.33 RT	632.50	649.77	651.44	630.50	W18X283	2'-6"	624.8	622.47	617.47	32.30
P-32	229+36.75	71.33 RT	632.48	649.75	651.42	630.48	W18X283	2'-6"	624.8	622.44	617.44	32.31
P-33	229+42.25	71.33 RT	632.46	649.73	651.40	630.46	W18X283	2'-6"	624.8	622.42	617.42	32.31
P-34	229+47.75	71.33 RT	632.45	649.72	651.38	630.45	W18X283	2'-6"	624.8	622.40	617.40	32.32
P-35	229+53.25	71.33 RT	632.43	649.70	651.37	630.43	W18X283	2'-6"	624.8	622.38	617.38	32.32
P-36	229+58.75	71.33 RT	632.41	649.68	651.35	630.41	W18X283	2'-6"	624.8	622.36	617.36	32.32
P-37	229+61.25	71.33 RT	632.41	649.67	651.34	630.41	W18X283	2'-6"	624.8	622.35	617.35	32.33

See details on sheet 3 of 23 for minimum pile embedment in competent rock.

MODEL: 0460153-66997-008
FILE NAME: I:\jobs\2019\193.1901 PTB 192-011 District 3 Various Phase III Structure Projects\WO 2 - Waldron Road over I-57\Drawings\wall A\Sheet\0460153-66997-008-wall A sched.dle sheet.dgn
3/18/2021 3:40:58 PM

Prairie Engineers, P.C.
www.prairieengineers.com
professional design firm no. 184-005965
© Copyright Prairie Engineers, P.C. 2020

USER NAME =	DESIGNED - RHC	REVISED -	
	CHECKED - CMF	REVISED -	
PLOT SCALE =	DRAWN - JLM	REVISED -	
PLOT DATE =	CHECKED - SMA	REVISED -	

STATE OF ILLINOIS
DEPARTMENT OF TRANSPORTATION

WALL A TABLE OF PILE LENGTHS AND ELEVATIONS
STRUCTURE NO. 046-0153
SHEET 8 OF 23 SHEETS

F.A.I. RTE.	SECTION	COUNTY	TOTAL SHEETS	SHEET NO.
57	139HBR-6	KANKAKEE	202	151
		CONTRACT NO. 66997		
	ILLINOIS FED. AID PROJECT			

SOLDIER PILE NUMBER	SOLDIER PILE STATION	OFFSET	EDGE OF SHOULDER ELEVATION	TOP OF PILE ELEVATION	TOP OF WALL ELEVATION	BOTTOM OF WALL ELEVATION	SECTION	HOLE DIAMETER	ESTIMATED ROCK ELEVATION	BOTTOM OF TRENCH	ESTIMATED PILE TIP ELEVATION	ESTIMATED SOLDIER PILE LENGTH
		(FEET)	(FEET)	(FEET)	(FEET)	(FEET)			(FEET)	(FEET)	(FEET)	(FEET)
P38	229+66.75	71.33 RT	632.39	649.66	651.32	630.39	W18X283	2'-6"	624.8	622.33	617.33	32.33
P39	229+72.25	71.33 RT	632.37	649.64	651.31	630.37	W18X283	2'-6"	624.8	622.30	617.30	32.33
P40	229+77.75	71.33 RT	632.35	649.62	651.29	630.35	W18X283	2'-6"	624.8	622.28	617.28	32.34
P41	229+83.25	71.33 RT	632.34	649.60	651.27	630.34	W18X283	2'-6"	624.8	622.26	617.26	32.34
P42	229+88.75	71.33 RT	632.32	649.59	651.25	630.32	W18X283	2'-6"	624.8	622.24	617.24	32.35
P43	229+91.25	71.33 RT	632.31	649.58	651.25	630.31	W18X283	2'-6"	624.8	622.23	617.23	32.35
P44	229+96.75	71.33 RT	632.30	649.56	651.23	630.30	W18X283	2'-6"	624.8	622.21	617.21	32.35
P45	230+02.25	71.33 RT	632.28	649.55	651.21	630.28	W18X283	2'-6"	624.8	622.19	617.19	32.36
P46	230+07.75	71.33 RT	632.26	649.29	650.95	630.26	W18X283	2'-6"	624.8	622.15	617.15	32.14
P47	230+13.25	71.33 RT	632.24	648.52	650.18	630.24	W18X283	2'-6"	624.8	622.09	617.09	31.42
P48	230+18.75	71.33 RT	632.23	647.74	649.41	630.23	W18X283	2'-6"	624.8	622.03	617.03	30.71
P49	230+21.25	71.33 RT	632.22	647.39	649.06	630.22	W18X283	2'-6"	624.8	622.01	617.01	30.38
P50	230+26.75	71.33 RT	632.20	646.62	648.29	630.20	W18X283	2'-6"	624.8	622.00	617.00	29.62
P51	230+32.25	71.33 RT	632.19	645.85	647.51	630.19	W18X283	2'-6"	624.8	621.98	616.98	28.87
P52	230+37.75	71.33 RT	632.17	645.07	646.74	630.17	W18X283	2'-6"	624.8	621.96	616.96	28.11
P52	230+43.25	71.33 RT	632.15	644.30	645.97	630.15	W18X283	2'-6"	624.8	621.94	616.94	27.36
P54	230+48.75	71.33 RT	632.13	643.53	645.20	630.13	W18X283	2'-6"	624.8	621.93	616.93	26.61
P55	230+51.25	71.07 RT	632.13	643.85	644.85	630.13	W14X193	2'-6"	624.8	621.92	616.92	26.93
P56	230+60.42	71.07 RT	632.10	642.56	643.56	630.10	W14X193	2'-6"	624.8	621.89	616.89	25.67
P57	230+69.58	71.07 RT	632.07	641.27	642.27	630.07	W14X193	2'-6"	624.8	621.86	616.86	24.41
P58	230+78.75	71.07 RT	632.04	639.98	640.98	630.04	W14X193	2'-6"	624.8	621.83	616.83	23.15
P59	230+81.25	71.07 RT	632.03	639.63	640.63	630.03	W14X193	2'-6"	624.8	621.82	616.82	22.81
P60	230+90.42	71.07 RT	632.00	638.35	639.35	630.00	W14X193	2'-6"	624.8	621.79	616.79	21.55
P61	230+99.58	71.07 RT	631.98	637.06	638.06	629.98	W14X193	2'-6"	624.8	621.76	616.76	20.30
P62	231+08.75	71.07 RT	631.95	636.88	637.88	629.95	W14X193	2'-6"	624.8	621.73	616.73	20.15
P63	231+11.25	71.07 RT	631.94	636.85	637.85	629.94	W14X193	2'-6"	624.8	621.72	616.72	20.13
P64	231+20.42	71.07 RT	631.91	636.73	637.73	629.91	W14X193	2'-6"	624.8	621.63	616.63	20.10
P65	231+29.58	71.07 RT	631.88	636.61	637.61	629.88	W14X193	2'-6"	624.8	621.53	616.53	20.07
P66	231+38.75	71.07 RT	631.85	636.49	637.49	629.85	W14X193	2'-6"	624.8	621.44	616.44	20.04
P67	231+41.25	71.07 RT	631.85	636.46	637.46	629.85	W14X193	2'-6"	624.8	621.43	616.43	20.03
P68	231+50.42	71.07 RT	631.82	636.33	637.33	629.82	W14X193	2'-6"	624.8	621.39	616.39	19.94
P69	231+59.58	71.07 RT	631.79	636.21	637.21	629.79	W14X193	2'-6"	624.8	621.36	616.36	19.86
P70	231+68.75	71.07 RT	631.76	636.09	637.09	629.76	W14X193	2'-6"	624.8	621.32	616.32	19.77
P71	231+71.25	71.07 RT	631.75	636.06	637.06	629.75	W14X193	2'-6"	624.8	621.31	616.31	19.75
P72	231+80.42	71.07 RT	631.73	635.94	636.94	629.73	W14X193	2'-6"	624.8	621.28	616.28	19.66
P73	231+89.58	71.07 RT	631.70	635.82	636.82	629.70	W14X193	2'-6"	624.8	621.24	616.24	19.57
P74	231+98.75	71.07 RT	631.67	635.70	636.70	629.67	W14X193	2'-6"	624.8	621.21	616.21	19.49
P75	232+01.25	71.07 RT	631.66	635.66	636.66	629.66	W14X193	2'-6"	624.8	621.20	616.20	19.46
P76	232+10.42	71.07 RT	631.63	635.54	636.54	629.63	W14X193	2'-6"	624.8	621.17	616.17	19.38
P77	232+19.58	71.07 RT	631.60	635.42	636.42	629.60	W14X193	2'-6"	624.8	621.13	616.13	19.29
P78	232+28.75	71.07 RT	631.58	635.30	636.30	629.58	W14X193	2'-6"	624.8	621.10	616.10	19.20
P79	232+31.25	71.07 RT	631.57	635.27	636.27	629.57	W14X193	2'-6"	624.8	621.09	616.09	19.18
P80	232+40.42	71.07 RT	631.54	635.15	636.15	629.54	W14X193	2'-6"	624.8	621.05	616.05	19.09
P81	232+49.58	71.07 RT	631.51	635.03	636.03	629.51	W14X193	2'-6"	624.8	621.02	616.02	19.01
P82	232+58.75	71.07 RT	631.48	634.90	635.90	629.48	W14X193	2'-6"	624.8	620.98	615.98	18.92
P83	232+61.25	71.07 RT	631.48	634.87	635.87	629.48	W14X193	2'-6"	624.8	620.97	615.97	18.90
P84	232+70.42	71.07 RT	631.45	634.75	635.75	629.45	W14X193	2'-6"	624.8	620.94	615.94	18.81
P85	232+79.58	71.07 RT	631.42	634.63	635.63	629.42	W14X193	2'-6"	624.8	620.91	615.91	18.72
P86	232+88.75	71.07 RT	631.39	634.51	635.51	629.39	W14X193	2'-6"	624.8	620.87	615.87	18.64
P87	232+91.25	71.07 RT	631.38	634.48	635.48	629.38	W14X193	2'-6"	624.8	620.86	615.86	18.61
P88	233+00.42	71.07 RT	631.35	634.35	635.35	629.35	W14X193	2'-6"	624.8	620.83	615.83	18.53
P89	233+09.58	71.07 RT	631.33	634.23	635.23	629.33	W14X193	2'-6"	624.8	620.79	615.79	18.44
P90	233+18.75	71.07 RT	631.30	634.11	635.11	629.30	W14X193	2'-6"	624.8	620.76	615.76	18.35
P91	233+21.25	71.07 RT	631.29	634.08	635.08	629.29	W14X193	2'-6"	624.8	620.75	615.75	18.33
P92	233+30.42	71.07 RT	631.26	633.96	634.96	629.26	W14X193	2'-6"	624.8	620.71	615.71	18.24
P93	233+39.58	71.07 RT	631.23	633.84	634.84	629.23	W14X193	2'-6"	624.8	620.68	615.68	18.16
P94	233+48.75	71.07 RT	631.20	633.72	634.72	629.20	W14X193	2'-6"	624.8	620.64	615.64	18.07

See details on sheet 3 of 23 for minimum pile embedment in competent rock.

WALL A BAR DIMENSIONS

Bar	No.	A	B
v101(E)	40	9'-9"	6'-4"
v102(E)	41	13'-1"	9'-9"
v103(E)	21	16'-5"	13'-1"
v104(E)	21	19'-9"	16'-5"
v105(E)	21	20'-5"	19'-9"
v107(E)	21	20'-7"	18'-8"
v108(E)	21	18'-8"	14'-7"
v109(E)	21	14'-7"	10'-5"
v110(E)	41	10'-5"	7'-7"
v111(E)	41	7'-7"	7'-3"
v112(E)	41	7'-3"	7'-0"
v113(E)	41	7'-0"	6'-8"
v114(E)	41	6'-8"	6'-5"
v115(E)	41	6'-5"	6'-1"
v116(E)	41	6'-1"	5'-9"
v117(E)	41	5'-9"	5'-6"
v118(E)	41	5'-6"	5'-2"
v120(E)	20	14'-3"	10'-5"

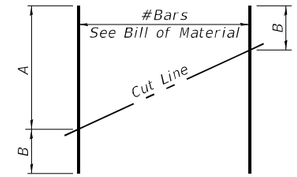

FIELD CUTTING DIAGRAM

Order bars full length. Cut as shown and use remainder of bars in opposite face. See table for lengths.

WALL A BILL OF MATERIAL

	Bar	No.	Size	Length	Shape
	h141(E)	466	#5	33'-2"	
	h142(E)	275	#5	29'-10"	
	h143(E)	49	#7	35'-10"	
	h144(E)	35	#7	29'-10"	
	h145(E)	7	#7	35'-6"	
	s125(E)	520	#4	8'-6"	⊓
*	v101(E)	40	#5	16'-1"	
*	v102(E)	41	#5	22'-10"	
*	v103(E)	21	#5	29'-6"	
*	v104(E)	21	#5	36'-2"	
*	v105(E)	21	#5	40'-2"	
	v106(E)	126	#5	20'-7"	
*	v107(E)	21	#5	39'-3"	
*	v108(E)	21	#5	33'-3"	
*	v109(E)	21	#5	25'-0"	
*	v110(E)	41	#5	18'-0"	
*	v111(E)	41	#5	14'-10"	
*	v112(E)	41	#5	14'-4"	
*	v113(E)	41	#5	13'-8"	
*	v114(E)	41	#5	13'-1"	
*	v115(E)	41	#5	12'-6"	
*	v116(E)	41	#5	11'-10"	
*	v117(E)	41	#5	11'-3"	
*	v118(E)	41	#5	10'-8"	
	v119(E)	320	#5	14'-3"	
*	v120(E)	20	#5	24'-8"	

Structure Excavation	Cu. Yd.	833
Stud Shear Connectors	Each	1,615
Reinforcement Bars, Epoxy Coated	Pound	52,950
Furnishing Soldier Piles (W Section)	Foot	2,390
Drilling and Setting Solder Piles (in Soil)	Cu. Ft.	8,739
Drilling and Setting Solder Piles (in Rock)	Cu. Ft.	3,593
Untreated Timber Lagging	Sq. Ft.	6,234
Concrete Structures	Cu. Yd.	277.6
Concrete Sealer	Sq. Ft.	8,395
Geocomposite Wall Drain	Sq. Yd.	473
Pipe Underdrains for Structures 4 inch	Foot	660

* Bars to be field cut

MODEL: 046015S-66997-009
FILE NAME: I:\jobs\2019\193.1901 PTB 192-011 District 3 Various Phase III Structure Projects\W0 2 - Waldron Road over I-57\Submittals\2021.04.20 Final SP Wall Submittal to Chamlin & D3\CAD_Sheets\046015S-66997-009-wall A schedule sheet.dgn
4/20/2021 11:52:28 AM

Prairie Engineers, P.C.
www.prairieengineers.com
professional design firm no. 184-005965
© Copyright Prairie Engineers, P.C. 2020

USER NAME =	DESIGNED - RHC	REVISED -
	CHECKED - CMF	REVISED -
PLOT SCALE =	DRAWN - JLM	REVISED -
PLOT DATE =	CHECKED - SMA	REVISED -

STATE OF ILLINOIS
DEPARTMENT OF TRANSPORTATION

WALL A TABLE OF PILE LENGTHS AND ELEVATIONS, BILL OF MATERIAL
STRUCTURE NO. 046-0153
SHEET 9 OF 23 SHEETS

F.A.I. RTE.	SECTION	COUNTY	TOTAL SHEETS	SHEET NO.
57	139HBR-6	KANKAKEE	202	152
		CONTRACT NO. 66997		
	ILLINOIS	FED. AID PROJECT		

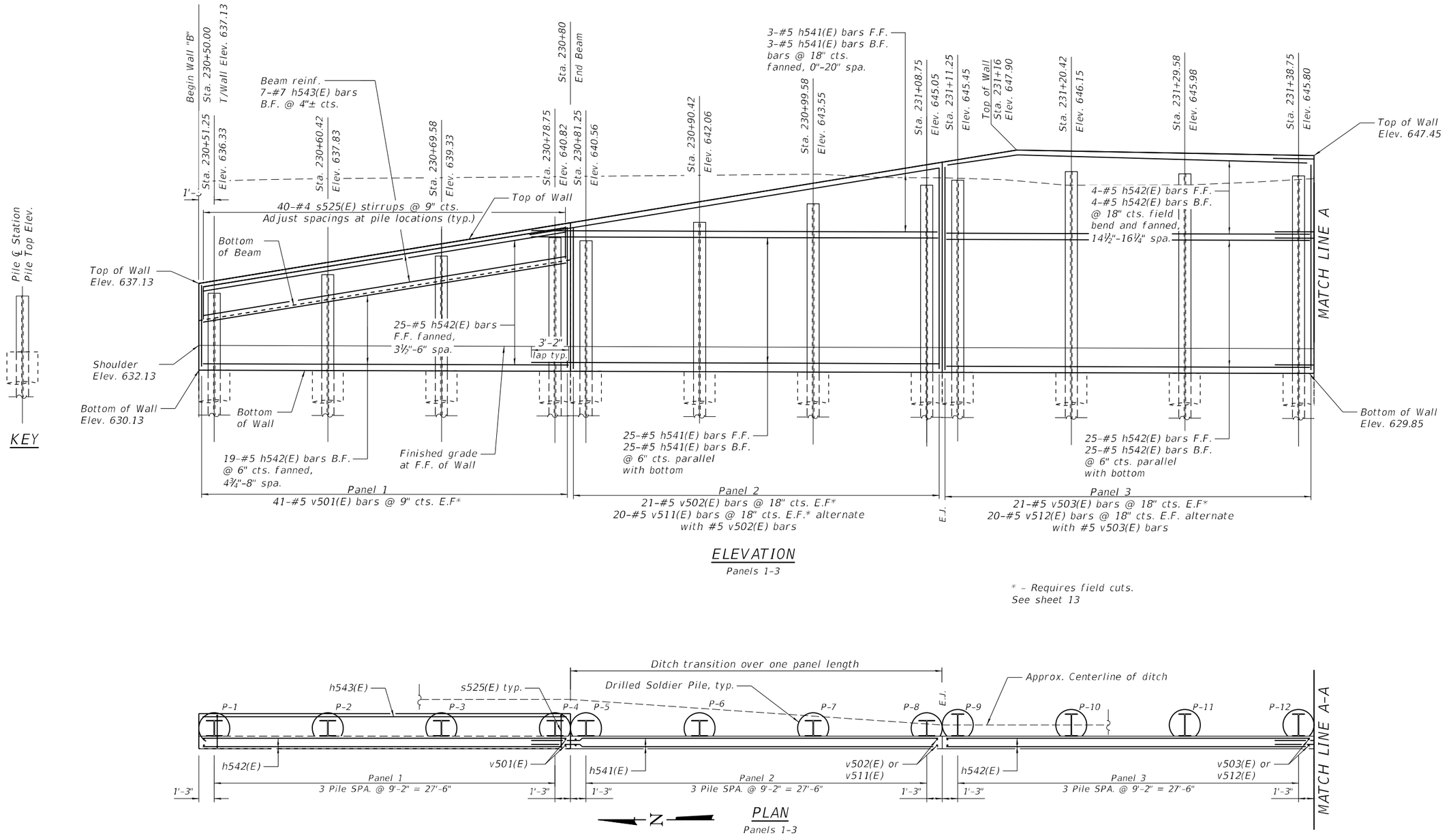

ELEVATION
Panels 1-3

* - Requires field cuts.
See sheet 13

PLAN
Panels 1-3

Notes:
F.F. = Front Face
B.F. = Back Face
See sheets 13 of 23 for Pile Sizes, Elevations, Lengths, Shoulder Elevations, Base of Wall Elevations, and Field Cutting Diagram.
See sheets 14-15 of 23 for Sections and Details. See sheet 5 of 23 for S bar details.

MINIMUM BAR LAP
#5 bar = 3'-2"
#7 bar = 5'-6"

MODEL: 046015-66997-010
FILE NAME: I:\Jobs\2019\193.1901 PTB 192-011 District 3 Various Phase III Structure Projects\WO 2 - Waldron Road over I-57\Drawings\wall B\Sheet\046015-66997-010-012-wall B Plan-sheets.dgn
3/18/2021 3:58:46 PM

Prairie Engineers, P.C.
www.prairieengineers.com
professional design firm no. 184-005965
© Copyright Prairie Engineers, P.C. 2020

USER NAME =	DESIGNED - RHC	REVISED -	
	CHECKED - CMF	REVISED -	
PLOT SCALE =	DRAWN - JLM	REVISED -	
PLOT DATE =	CHECKED - SMA	REVISED -	

STATE OF ILLINOIS
DEPARTMENT OF TRANSPORTATION

WALL B PLAN AND ENLARGED ELEVATION
STRUCTURE NO. 046-0153
SHEET 10 OF 23 SHEETS

F.A.I. RTE.	SECTION	COUNTY	TOTAL SHEETS	SHEET NO.
57	139HBR-6	KANKAKEE	202	153
		CONTRACT NO. 66997		
	ILLINOIS	FED. AID PROJECT		

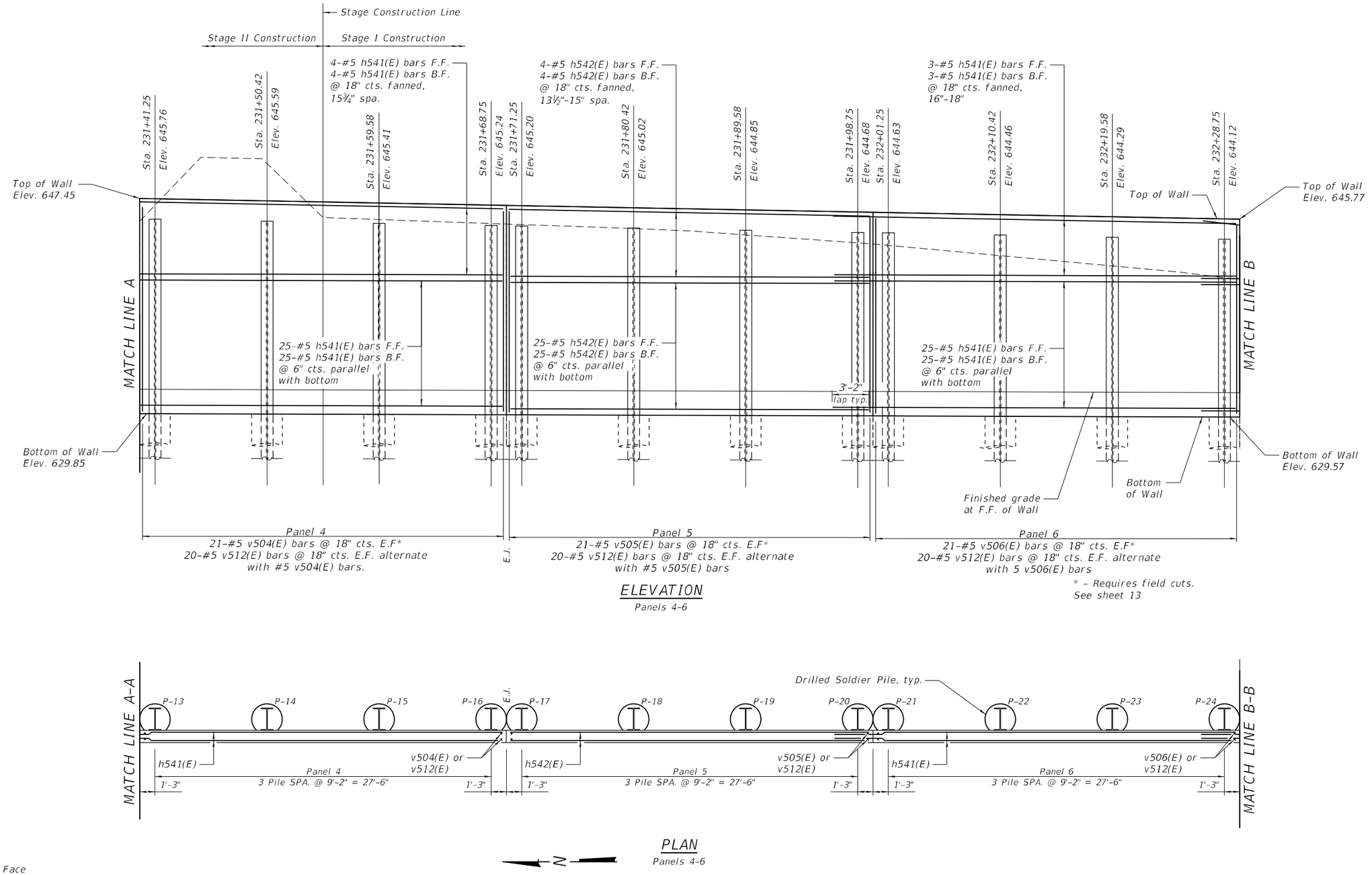

ELEVATION

Panels 4-6

PLAN

Panels 4-6

N

Notes:
F.F. = Front Face
B.F. = Back Face
See sheets 13 of 23 for Pile Sizes, Elevations, Lengths, Shoulder Elevations, Base of Wall Elevations, and Field Cutting Diagram.
See sheets 14-15 of 23 for Sections and Details. See sheet 5 of 23 for S bar details.

MINIMUM BAR LAP

#5 bar = 3'-2"

Prairie Engineers, P.C.
www.prairieengineers.com
professional design firm no. 184-005965
© Copyright Prairie Engineers, P.C. 2020

USER NAME =	DESIGNED - RHC	REVISED -	
	CHECKED - CMF	REVISED -	
PLOT SCALE =	DRAWN - JLM	REVISED -	
PLOT DATE =	CHECKED - SMA	REVISED -	

STATE OF ILLINOIS
DEPARTMENT OF TRANSPORTATION

WALL B PLAN AND ENLARGED ELEVATION
STRUCTURE NO. 046-0153

SHEET 11 OF 23 SHEETS

F.A.I. RTE.	SECTION	COUNTY	TOTAL SHEETS	SHEET NO.
57	139HBR-6	KANKAKEE	202	154
		CONTRACT NO. 66997		
	ILLINOIS FED. AID PROJECT			

MODEL: 046015-66997-011
FILE NAME: i:\jobs\2019\193.1901 PTB 192-011 District 3 Various Phase III Structure Projects\WO 2 - Waldron Road over I-57\Drawings\wall B\Sheet\046015-66997-010-012-wall B Plan-sheets.dgn
3/18/2021 3:59:19 PM

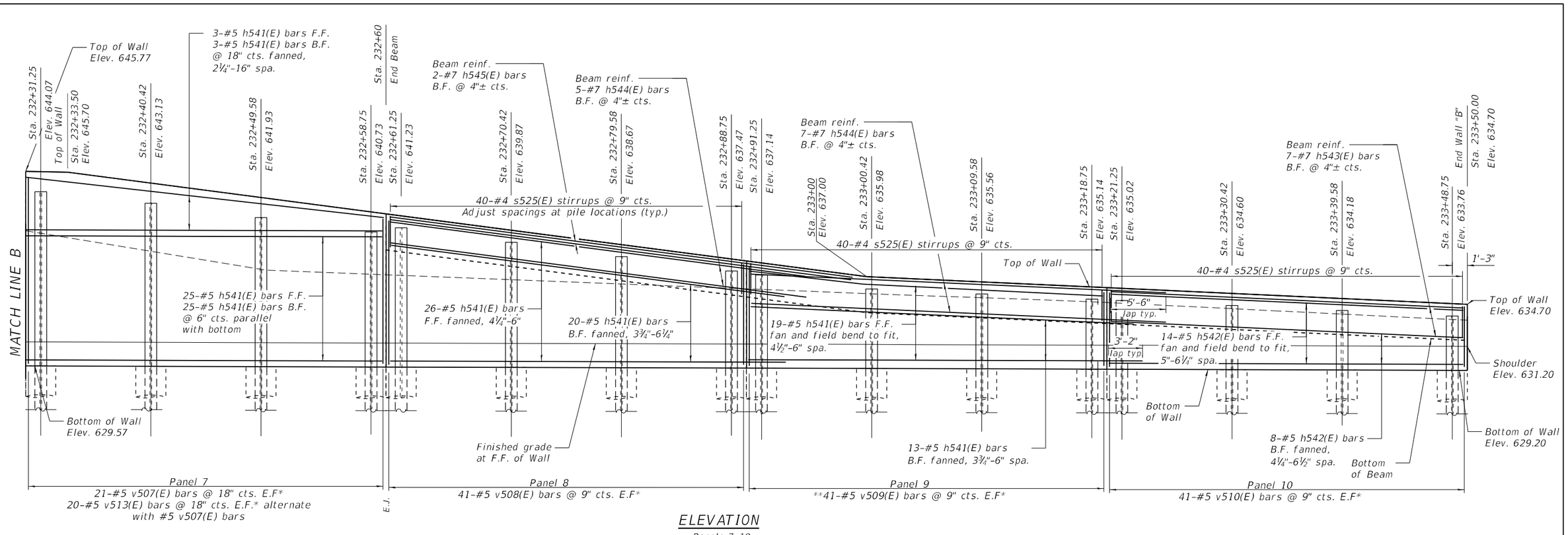

ELEVATION
Panels 7-10

** - After cutting bars to length per the cutting diagram, trim to fit as needed.

* - Requires field cuts.
See sheet 13

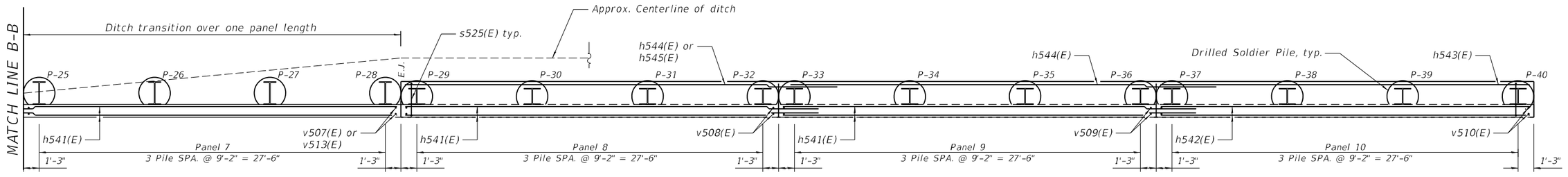

PLAN
Panels 7-10

Notes:
F.F. = Front Face
B.F. = Back Face
See sheets 13 of 23 for Pile Sizes, Elevations, Lengths, Shoulder Elevations, Base of Wall Elevations, and Field Cutting Diagram.
See sheets 14-15 of 23 for Sections and Details. See sheet 5 of 23 for S bar details.

MINIMUM BAR LAP
#5 bar = 3'-2"
#7 bar = 5'-6"

Prairie Engineers, P.C.
www.prairieengineers.com
professional design firm no. 184-005965
© Copyright Prairie Engineers, P.C. 2020

USER NAME =		DESIGNED - RHC	REVISED -	
		CHECKED - CMF	REVISED -	
PLOT SCALE =		DRAWN - JLM	REVISED -	
PLOT DATE =		CHECKED - SMA	REVISED -	

STATE OF ILLINOIS
DEPARTMENT OF TRANSPORTATION

WALL B PLAN AND ENLARGED ELEVATION
STRUCTURE NO. 046-0153
SHEET 12 OF 23 SHEETS

F.A.I. RTE.	SECTION	COUNTY	TOTAL SHEETS	SHEET NO.
57	139HBR-6	KANKAKEE	202	155
		CONTRACT NO. 66997		
	ILLINOIS	FED. AID PROJECT		

MODEL: 046015-66997-012
FILE NAME: I:\Jobs\2019\193.1901 PTB 192-011 District 3 Various Phase III Structure Projects\WO 2 - Waltron Road over I-57\Drawings\wall B\Sheet\046015-66997-010-012-wall B Plan-sheets.dgn
3/18/2021 3:59:50 PM

SOLDIER PILE NUMBER	SOLDIER PILE STATION	OFFSET	EDGE OF SHOULDER ELEVATION	TOP OF PILE ELEVATION	TOP OF WALL ELEVATION	BOTTOM OF WALL ELEVATION	SECTION	HOLE DIAMETER	ESTIMATED ROCK ELEVATION	BOTTOM OF TRENCH	ESTIMATED PILE TIP ELEVATION	ESTIMATED SOLDIER PILE LENGTH
		(FEET)	(FEET)	(FEET)	(FEET)	(FEET)			(FEET)	(FEET)	(FEET)	(FEET)
P1	230+51.25	71.07 LT	632.13	636.33	637.33	630.13	W14X193	2'-6"	632.70	625.75	620.75	15.58
P2	230+60.42	71.07 LT	632.10	637.83	638.83	630.10	W14X193	2'-6"	632.70	625.71	620.71	17.12
P3	230+69.58	71.07 LT	632.07	639.33	640.33	630.07	W14X193	2'-6"	632.70	625.67	620.67	18.66
P4	230+78.75	71.07 LT	632.04	640.82	641.82	630.04	W14X193	2'-6"	632.70	625.62	620.62	20.20
P5	230+81.25	71.07 LT	632.03	640.56	642.23	630.03	W14X193	2'-6"	632.70	625.61	620.61	19.95
P6	230+90.42	71.07 LT	632.00	642.06	643.73	630.00	W14X193	2'-6"	632.70	625.56	620.56	21.49
P7	230+99.58	71.07 LT	631.98	643.55	645.22	629.98	W14X193	2'-6"	632.70	625.52	620.52	23.03
P8	231+08.75	71.07 LT	631.95	645.05	646.72	629.95	W14X193	2'-6"	632.70	625.47	620.47	24.57
P9	231+11.25	71.33 LT	631.94	645.45	647.12	629.94	W18X283	2'-6"	632.70	625.46	620.46	24.99
P10	231+20.42	71.33 LT	631.91	646.15	647.82	629.91	W18X283	2'-6"	632.70	625.42	620.42	25.73
P11	231+29.58	71.33 LT	631.88	645.98	647.65	629.88	W18X283	2'-6"	632.70	625.37	620.37	25.60
P12	231+38.75	71.33 LT	631.85	645.80	647.47	629.85	W18X283	2'-6"	632.70	625.33	620.33	25.48
P13	231+41.25	71.33 LT	631.85	645.76	647.43	629.85	W18X283	2'-6"	632.70	625.32	620.32	25.44
P14	231+50.42	71.33 LT	631.82	645.59	647.26	629.82	W18X283	2'-6"	632.70	625.27	620.27	25.32
P15	231+59.58	71.33 LT	631.79	645.41	647.08	629.79	W18X283	2'-6"	632.70	625.23	620.23	25.19
P16	231+68.75	71.33 LT	631.76	645.24	646.91	629.76	W18X283	2'-6"	632.70	625.18	620.18	25.06
P17	231+71.25	71.33 LT	631.75	645.20	646.87	629.75	W18X283	2'-6"	632.70	625.17	620.17	25.03
P18	231+80.42	71.33 LT	631.73	645.02	646.69	629.73	W18X283	2'-6"	632.70	625.12	620.12	24.90
P19	231+89.58	71.33 LT	631.70	644.85	646.52	629.70	W18X283	2'-6"	632.70	625.08	620.08	24.77
P20	231+98.75	71.33 LT	631.67	644.68	646.35	629.67	W18X283	2'-6"	632.70	625.03	620.03	24.65
P21	232+01.25	71.33 LT	631.66	644.63	646.30	629.66	W18X283	2'-6"	632.70	625.02	620.02	24.61
P22	232+10.42	71.33 LT	631.63	644.46	646.13	629.63	W18X283	2'-6"	632.70	624.98	619.98	24.48
P23	232+19.58	71.33 LT	631.60	644.29	645.96	629.60	W18X283	2'-6"	632.70	624.93	619.93	24.36
P24	232+28.75	71.33 LT	631.58	644.12	645.79	629.58	W18X283	2'-6"	632.70	624.89	619.89	24.23
P25	232+31.25	71.33 LT	631.57	644.07	645.74	629.57	W18X283	2'-6"	632.70	624.88	619.88	24.20
P26	232+40.42	71.33 LT	631.54	643.13	644.80	629.54	W18X283	2'-6"	632.70	624.83	619.83	23.29
P27	232+49.58	71.33 LT	631.51	641.93	643.60	629.51	W18X283	2'-6"	632.70	624.79	619.79	22.14
P28	232+58.75	71.33 LT	631.48	640.73	642.40	629.48	W18X283	2'-6"	632.70	624.74	619.74	20.99
P29	232+61.25	71.07 LT	631.48	641.23	642.07	629.48	W14X193	2'-6"	632.70	624.73	619.73	21.50
P30	232+70.42	71.07 LT	631.45	639.87	640.87	629.45	W14X193	2'-6"	632.70	624.68	619.68	20.19
P31	232+79.58	71.07 LT	631.42	638.67	639.67	629.42	W14X193	2'-6"	632.70	624.64	619.64	19.03
P32	232+88.75	71.07 LT	631.39	637.47	638.47	629.39	W14X193	2'-6"	632.70	624.59	619.59	17.88
P33	232+91.25	71.07 LT	631.38	637.14	638.14	629.38	W14X193	2'-6"	632.70	624.58	619.58	17.56
P34	233+00.42	71.07 LT	631.35	635.98	636.98	629.35	W14X193	2'-6"	632.70	624.54	619.54	16.44
P35	233+09.58	71.07 LT	631.33	635.56	636.56	629.33	W14X193	2'-6"	632.70	624.49	619.49	16.07
P36	233+18.75	71.07 LT	631.30	635.14	636.14	629.30	W14X193	2'-6"	632.70	624.45	619.45	15.69
P37	233+21.25	71.07 LT	631.29	635.02	636.02	629.29	W14X193	2'-6"	632.70	624.44	619.44	15.59
P38	233+30.42	71.07 LT	631.26	634.60	635.60	629.26	W14X193	2'-6"	632.70	624.39	619.39	15.21
P39	233+39.58	71.07 LT	631.23	634.18	635.18	629.23	W14X193	2'-6"	632.70	624.35	619.35	14.83
P40	233+48.75	71.07 LT	631.20	633.76	634.76	629.20	W14X193	2'-6"	632.70	624.30	619.30	14.46

See details on sheet 3 of 23 for minimum pile embedment in competent rock.

WALL B BAR DIMENSIONS

Bar	No.	A	B
v501(E)	41	11'-8"	6'-8"
v502(E)	21	16'-8"	11'-8"
v503(E)	21	17'-3"	16'-8"
v504(E)	21	17'-3"	16'-10"
v505(E)	21	16'-10"	16'-4"
v506(E)	21	16'-4"	15'-10"
v507(E)	21	15'-10"	12'-5"
v508(E)	41	12'-5"	8'-7"
v509(E)	41	8'-7"	6'-5"
v510(E)	41	6'-5"	5'-2"
v511(E)	20	14'-3"	11'-8"
v513(E)	20	14'-3"	12'-5"

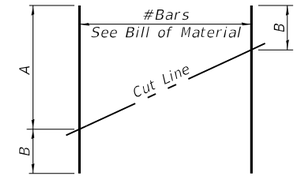

FIELD CUTTING DIAGRAM

Order bars full length. Cut as shown and use remainder of bars in opposite face. See table for lengths.

WALL B BILL OF MATERIAL

	Bar	No.	Size	Length	Shape
	h541(E)	304	#5	33'-2"	
	h542(E)	182	#5	29'-10"	
	h543(E)	14	#7	29'-10"	
	h544(E)	12	#7	35'-10"	
	h545(E)	2	#7	42'-0"	
	s525(E)	160	#4	8'-6"	⊓
*	v501(E)	41	#5	18'-4"	
*	v502(E)	21	#5	28'-4"	
*	v503(E)	21	#5	33'-11"	
*	v504(E)	21	#5	34'-1"	
*	v505(E)	21	#5	33'-2"	
*	v506(E)	21	#5	32'-2"	
*	v507(E)	21	#5	28'-3"	
*	v508(E)	41	#5	21'-0"	
*	v509(E)	41	#5	15'-0"	
*	v510(E)	41	#5	11'-7"	
*	v511(E)	20	#5	25'-11"	
	v512(E)	160	#5	14'-3"	
*	v513(E)	20	#5	26'-8"	

Structure Excavation	Cu. Yd.	438
Stud Shear Connectors	Each	706
Reinforcement Bars, Epoxy Coated	Pound	29,370
Furnishing Soldier Piles (W Section)	Foot	856
Drilling and Setting Solder Piles (in Soil)	Cu. Ft.	1,987
Drilling and Setting Solder Piles (in Rock)	Cu. Ft.	2,488
Untreated Timber Lagging	Sq. Ft.	3,345
Concrete Structures	Cu. Yd.	146.2
Concrete Sealer	Sq. Ft.	4,398
Geocomposite Wall Drain	Sq. Yd.	266
Pipe Underdrains for Structures 4 inch	Foot	360

* Bars to be field cut

MODEL: 0460153-66997-013
FILE NAME: I:\jobs\2019\193.1901 PTB 192-011 District 3 Various Phase III Structure Projects\WO 2 - Waldron Road over I-57\Drawings\wall B\Sheet\0460153-66997-013-wall B schedule sheet.dgn
3/18/2021 4:00:43 PM

Prairie Engineers, P.C.
www.prairieengineers.com
professional design firm no. 184-005965
© Copyright Prairie Engineers, P.C. 2020

USER NAME =	DESIGNED - RHC	REVISED -	
	CHECKED - CMF	REVISED -	
PLOT SCALE =	DRAWN - JLM	REVISED -	
PLOT DATE =	CHECKED - SMA	REVISED -	

STATE OF ILLINOIS
DEPARTMENT OF TRANSPORTATION

WALL B TABLE OF PILE LENGTHS AND ELEVATIONS, BILL OF MATERIAL
STRUCTURE NO. 046-0153
SHEET 13 OF 23 SHEETS

F.A.I. RTE.	SECTION	COUNTY	TOTAL SHEETS	SHEET NO.
57	139HBR-6	KANKAKEE	202	156
		CONTRACT NO. 66997		
	ILLINOIS	FED. AID PROJECT		

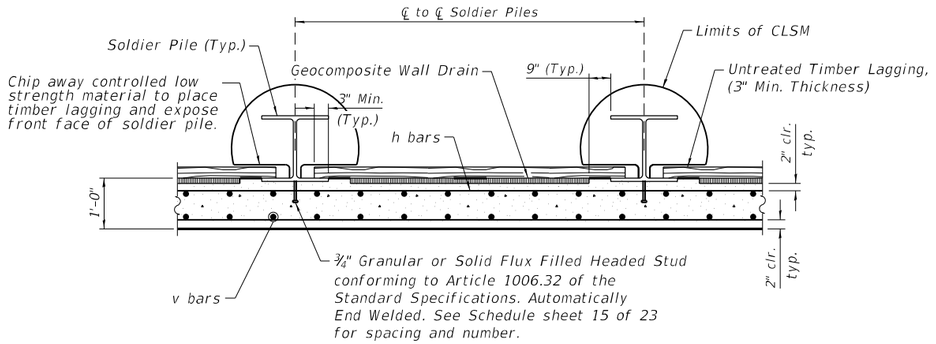

HORIZONTAL SECTION THRU SOLDIER PILE WALL

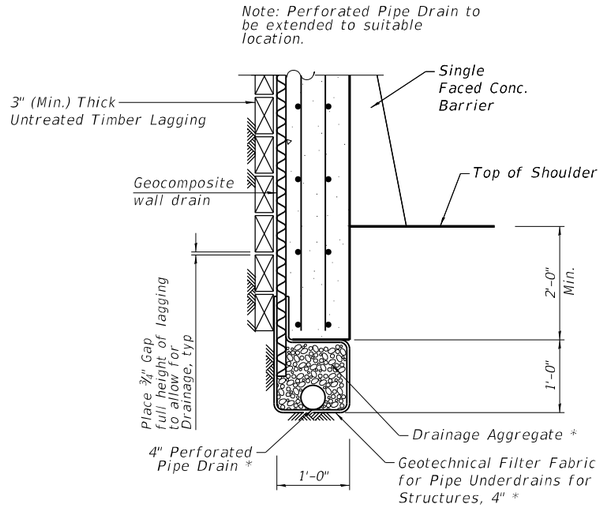

PIPE UNDERDRAIN DETAIL (BETWEEN SOLDIER PILES)

* Included in the cost of Pipe Underdrains for Structures, 4"

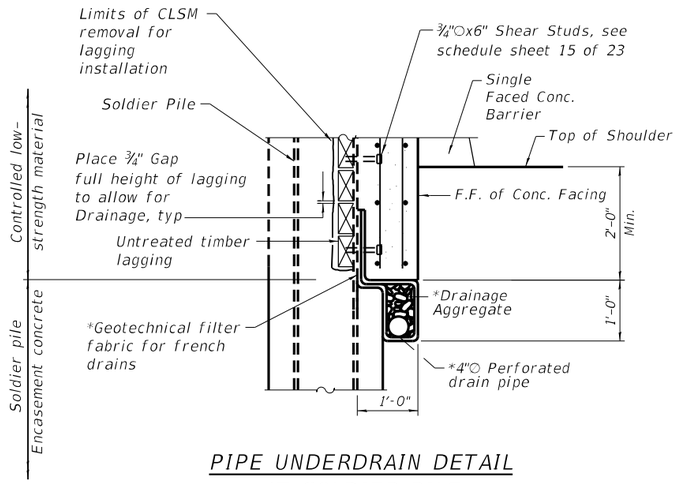

PIPE UNDERDRAIN DETAIL AT SOLDIER PILE

* Included in the cost of Pipe Underdrains for Structures

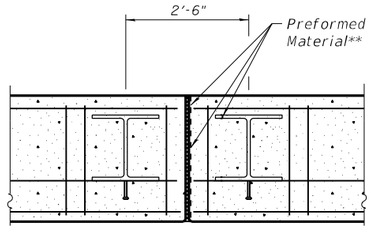

SECTION

(Expansion Joint at Beam)

**Included in the cost of Concrete Structures

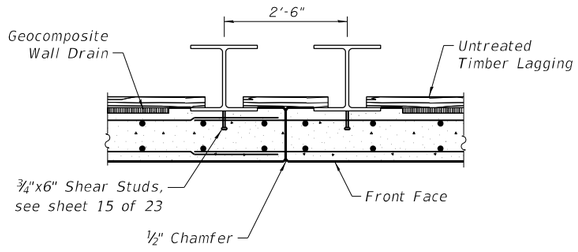

SECTION

(Construction Joint)
Limits of CSLM not shown.

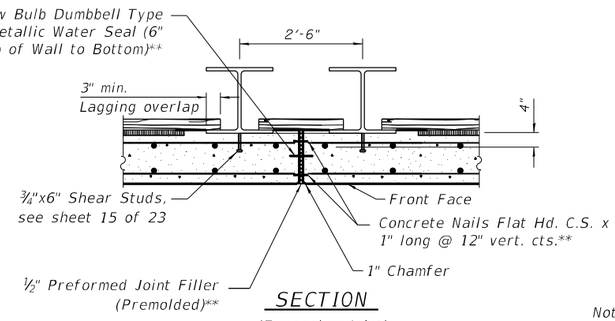

SECTION

(Expansion Joint)
Limits of CSLM not shown.

**Included in the cost of Concrete Structures

Notes:
See sheets 8, 9 and 13 of 23 for Soldier Pile Tables.
See sheet 15 of 23 for Shear Studs and Dowel Bars details and schedules.

MODEL: 0460153-66997-014
FILE NAME: I:\Jobs\2019\193.1901 PTB 192-911 District 3 Various Phase III Structure Projects\WO 2 • Waldron Road over I-57\Drawings\wall A\Sheet\0460153-66997-014-wall A section.dgn
3/18/2021 3:45:10 PM

Prairie Engineers, P.C.
www.prairieengineers.com
professional design firm no. 184-005965

© Copyright Prairie Engineers, P.C. 2020

USER NAME =	DESIGNED - RHC	REVISED -	
	CHECKED - CMF	REVISED -	
PLOT SCALE =	DRAWN - JLM	REVISED -	
PLOT DATE =	CHECKED - SMA	REVISED -	

STATE OF ILLINOIS
DEPARTMENT OF TRANSPORTATION

SOLDIER PILE WALL SECTIONS
STRUCTURE NO. 046-0153

SHEET 14 OF 23 SHEETS

F.A.I. RTE.	SECTION	COUNTY	TOTAL SHEETS	SHEET NO.
57	139HBR-6	KANKAKEE	202	157
		CONTRACT NO. 66997		
	ILLINOIS FED. AID PROJECT			

* Number of studs at 8" cts. varies depending on height of wall. For short wall heights, 18" spacings at top of wall may not apply. See tables at right.

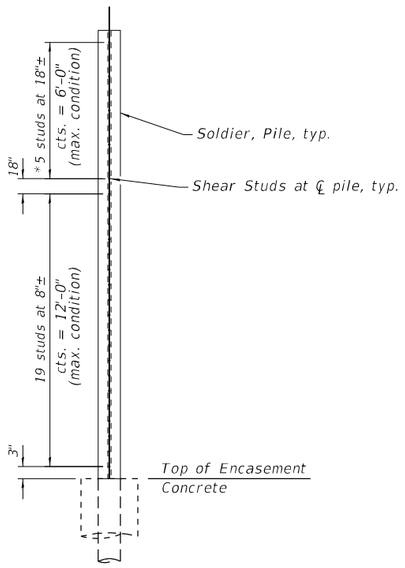

STUD SHEAR CONNECTOR LAYOUT

WALL A STUD SHEAR CONNECTOR TABLE

PILE	STATION	NUMBER OF CONNECTIONS BELOW 12'-3" @ 8"± SPA.	NUMBER OF CONNECTIONS ABOVE 12'-3" @ 18"± SPA.
P1	227+51.25	10	
P2	227+60.42	11	
P3	227+69.58	13	
P4	227+78.75	14	
P5	227+81.25	15	
P6	227+90.42	16	
P7	227+99.58	18	
P8	228+08.75	19	
P9	228+11.25	19	1
P10	228+18.13	19	1
P11	228+25.00	19	2
P12	228+31.88	19	2
P13	228+38.75	19	3
P14	228+41.25	19	3
P15	228+48.13	19	3
P16	228+55.00	19	4
P17	228+61.88	19	4
P18	228+68.75	19	5
P19	228+71.25	19	5
P20	228+76.75	19	5
P21	228+82.25	19	5
P22	228+87.75	19	5
P23	228+93.25	19	5
P24	228+98.75	19	5
P25	229+01.25	19	5
P26	229+06.75	19	5
P27	229+12.25	19	5
P28	229+17.75	19	5
P29	229+23.25	19	5
P30	229+28.75	19	5
P31	229+31.25	19	5
P32	229+36.75	19	5
P33	229+42.25	19	5
P34	229+47.75	19	5
P35	229+53.25	19	5
P36	229+58.75	19	5
P37	229+61.25	19	5
P38	229+66.75	19	5
P39	229+72.25	19	5
P40	229+77.75	19	5
P41	229+83.25	19	5
P42	229+88.75	19	5
P43	229+91.25	19	5
P44	229+96.75	19	5
P45	230+02.25	19	5
P46	230+07.75	19	5
P47	230+13.25	19	5
P48	230+18.75	19	4
P49	230+21.25	19	4
P50	230+26.75	19	3
P51	230+32.25	19	3
P52	230+37.75	19	2
P53	230+43.25	19	2
P54	230+48.75	19	1
P55	230+51.25	19	2
P56	230+60.42	19	1
P57	230+69.58	18	
P58	230+78.75	16	
P59	230+81.25	15	
P60	230+90.42	14	
P61	230+99.58	12	
P62	231+08.75	11	
P63	231+11.25	11	
P64	231+20.42	11	
P65	231+29.58	11	
P66	231+38.75	11	
P67	231+41.25	11	
P68	231+50.42	11	
P69	231+59.58	11	
P70	231+68.75	10	
P71	231+71.25	10	
P72	231+80.42	10	
P73	231+89.58	10	
P74	231+98.75	10	

PILE	STATION	NUMBER OF CONNECTIONS BELOW 12'-3" @ 8"± SPA.	NUMBER OF CONNECTIONS ABOVE 12'-3" @ 18"± SPA.
P75	232+01.25	10	
P76	232+10.42	10	
P77	232+19.58	10	
P78	232+28.75	10	
P79	232+31.25	10	
P80	232+40.42	9	
P81	232+49.58	9	
P82	232+58.75	9	
P83	232+61.25	9	
P84	232+70.42	9	
P85	232+79.58	9	
P86	232+88.75	9	
P87	232+91.25	9	
P88	233+00.42	9	
P89	233+09.58	8	
P90	233+18.75	8	
P91	233+21.25	8	
P92	233+30.42	8	
P93	233+39.58	8	
P94	233+48.75	8	

WALL B STUD SHEAR CONNECTOR TABLE

PILE	STATION	NUMBER OF CONNECTIONS BELOW 12'-3" @ 8"± SPA.	NUMBER OF CONNECTIONS ABOVE 12'-3" @ 18"± SPA.
P1	230+51.25	10	
P2	230+60.42	13	
P3	230+69.58	15	
P4	230+78.75	17	
P5	230+81.25	17	
P6	230+90.42	19	1
P7	230+99.58	19	2
P8	231+08.75	19	3
P9	231+11.25	19	3
P10	231+20.42	19	3
P11	231+29.58	19	3
P12	231+38.75	19	3
P13	231+41.25	19	3
P14	231+50.42	19	3
P15	231+59.58	19	3
P16	231+68.75	19	3
P17	231+71.25	19	3
P18	231+80.42	19	3
P19	231+89.58	19	3
P20	231+98.75	19	3
P21	232+01.25	19	2
P22	232+10.42	19	2
P23	232+19.58	19	2
P24	232+28.75	19	2
P25	232+31.25	19	2
P26	232+40.42	19	2
P27	232+49.58	19	1
P28	232+58.75	18	
P29	232+61.25	19	
P30	232+70.42	17	
P31	232+79.58	15	
P32	232+88.75	13	
P33	232+91.25	13	
P34	233+00.42	11	
P35	233+09.58	10	
P36	233+18.75	10	
P37	233+21.25	10	
P38	233+30.42	9	
P39	233+39.58	8	
P40	233+48.75	8	

Notes:
See sheet 14 of 23 for shear connector size and additional information.

MODEL: 046O153-66997-015
FILE NAME: I:\Jobs\2019\193.1901 PTB 192-011 District 3 Various Phase III Structure Projects\WO 2 - Waldron Road over I-57\Drawings\wall A\Sheet\046O153-66997-015-wall A shear studs.dgn
3/18/2021 3:45:51 PM

Prairie Engineers, P.C.
www.prairieengineers.com
professional design firm no. 184-005965
© Copyright Prairie Engineers, P.C. 2020

USER NAME =	DESIGNED - RHC	REVISED -	
	CHECKED - CMF	REVISED -	
PLOT SCALE =	DRAWN - RNH	REVISED -	
PLOT DATE =	CHECKED - SMA	REVISED -	

STATE OF ILLINOIS
DEPARTMENT OF TRANSPORTATION

SHEAR STUD CONNECTOR LAYOUT
STRUCTURE NO. 046-0153
SHEET 15 OF 23 SHEETS

F.A.I. RTE.	SECTION	COUNTY	TOTAL SHEETS	SHEET NO.
57	139HBR-6	KANKAKEE	202	158
		CONTRACT NO. 66997		
	ILLINOIS	FED. AID PROJECT		

Illinois Department of Transportation
Division of Highways

SOIL BORING LOG

Date 2/28/14

ROUTE I-57 (FAI 57) DESCRIPTION Waldron Road over I-57, 3.4 miles North of US 45/52 LOGGED BY Larry Myers

SECTION (46-3)R, HBK, 5HBR, 6HBR LOCATION SE 1/4

COUNTY Kankakee DRILLING METHOD Hollow Stem Auger HAMMER TYPE CME Automatic

STRUCT. NO. 046-0080 (Exist.)
Station 230+53.99 (Exist.)

BORING NO. BH 56 (West Wall)
Station 227+83.54
Offset 32.6 ft Rt.
Ground Surface Elev. 633.35 ft

Surface Water Elev. _____ ft
Stream Bed Elev. _____ ft

Groundwater Elev.:
First Encounter Dry ft
Upon Completion Dry ft
After ____ Hrs. _____ ft

	DEPTH (ft)	BLOWS (/6")	UCS Qu (tsf)	MOIST (%)
Augered Bituminous Shoulder, Brown & Gray Silty Clay Loam Till - Fill?	630.9			
		7		
Hard Gray Silty Clay Loam Till		8	>4.5	12
	628.9	11	P	
Dense Buff Limestone	628.1	100/3"		6
End of Boring				

The Unconfined Compressive Strength (UCS) Failure Mode is indicated by (B-Bulge, S-Shear, P-Penetrometer)
The SPT (N value) is the sum of the last two blow values in each sampling zone (AASHTO T206)

BBS, form 137 (Rev. 8-99)

Illinois Department of Transportation
Division of Highways
IDOT

SOIL BORING LOG

Date 2/28/14

ROUTE I-57 (FAI 57) DESCRIPTION Waldron Road over I-57, 3.4 miles North of US 45/52 LOGGED BY Larry Myers

SECTION (46-3)R, HBK, 5HBR, 6HBR LOCATION SE 1/4, SEC. 4, TWP. 30N, RNG. 13W, 2nd PM, Latitude 41.108625, Longitude -87.83535

COUNTY Kankakee DRILLING METHOD Hollow Stem Auger HAMMER TYPE CME Automatic

STRUCT. NO. 046-0080 (Exist.)
Station 230+53.99 (Exist.)

BORING NO. BH 57 (West Wall)
Station 228+63.37
Offset 32.6 ft Rt.
Ground Surface Elev. 633.60 ft

Surface Water Elev. _____ ft
Stream Bed Elev. _____ ft

Groundwater Elev.:
First Encounter Dry ft
Upon Completion Dry ft
After ____ Hrs. _____ ft

	DEPTH (ft)	BLOWS (/6")	UCS Qu (tsf)	MOIST (%)
Augered Bituminous Shoulder, Brown Fill Sand	631.10			
		3		
Loose Brown Fill Sand, Concrete Pieces - Fill		4		16
Note: Stopped Boring at 4' due to unknown trench - moved twice and still in trench. No JULIE markings in area.	629.60	4		
End of Boring				

The Unconfined Compressive Strength (UCS) Failure Mode is indicated by (B-Bulge, S-Shear, P-Penetrometer)
The SPT (N value) is the sum of the last two blow values in each sampling zone (AASHTO T206)

BBS, form 137 (Rev. 8-99)

Illinois Department of Transportation
Division of Highways
IDOT

SOIL BORING LOG

Date 2/28/14

ROUTE I-57 (FAI 57) DESCRIPTION Waldron Road over I-57, 3.4 miles North of US 45/52 LOGGED BY Larry Myers

SECTION (46-3)R, HBK, 5HBR, 6HBR LOCATION SE 1/4, SEC. 4, TWP. 30N, RNG. 13W, 2nd PM, Latitude 41.107998, Longitude -87.835337

COUNTY Kankakee DRILLING METHOD Hollow Stem Auger HAMMER TYPE CME Automatic

STRUCT. NO. 046-0080 (Exist.)
Station 230+53.99 (Exist.)

BORING NO. BH 59 (West Wall)
Station 230+91.82
Offset 36.1 ft Rt.
Ground Surface Elev. 632.79 ft

Surface Water Elev. _____ ft
Stream Bed Elev. _____ ft

Groundwater Elev.:
First Encounter Dry ft
Upon Completion Dry ft
After ____ Hrs. _____ ft

	DEPTH (ft)	BLOWS (/6")	UCS Qu (tsf)	MOIST (%)
Augered Bituminous Shoulder & Buff Weathered Limestone/Silt	630.29			
		50		
Buff Limestone - Weathered to 3'	629.71	100/1"		7
End of Boring				

The Unconfined Compressive Strength (UCS) Failure Mode is indicated by (B-Bulge, S-Shear, P-Penetrometer)
The SPT (N value) is the sum of the last two blow values in each sampling zone (AASHTO T206)

BBS, form 137 (Rev. 8-99)

SOIL BORING I-57 & IL 17 INTERCHANGE.GPJ IL_DOT.GDT 11/12/14

MODEL: 046O153-66997-016-021
FILE NAME: I:\jobs\2019\193.1901 PTB 192-011 District 3 Various Phase III Structure Projects\WO 2 - Waldron Road over I-57\Drawings\wall A\Sheet\046O153-66997-016-021-Wall A-soil borings.dgn
3/18/2021 3:46:43 PM

Prairie Engineers, P.C.
www.prairieengineers.com
professional design firm no. 184-005965
© Copyright Prairie Engineers, P.C. 2018

USER NAME =	DESIGNED - RHC	REVISED -	
	CHECKED - CMF	REVISED -	
PLOT SCALE =	DRAWN - JLM	REVISED -	
PLOT DATE =	CHECKED - SMA	REVISED -	

STATE OF ILLINOIS
DEPARTMENT OF TRANSPORTATION

WALL A SOIL BORINGS
STRUCTURE NO. 046-0153
SHEET 16 OF 23 SHEETS

F.A.I. RTE.	SECTION	COUNTY	TOTAL SHEETS	SHEET NO.
57	139HBR-6	KANKAKEE	202	159
			CONTRACT NO. 66997	
		ILLINOIS	FED. AID PROJECT	

Illinois Department of Transportation
Division of Highways
Illinois Department of Transportation

SOIL BORING LOG

Date 9/25/17

ROUTE I-57 (FAI 57) DESCRIPTION Retaining Wall South of Waldron Road over I-57 on West side of I-57 LOGGED BY Larry Myers

SECTION (46-3)R, HBK, 5HBR, 6HBR LOCATION SE 1/4, SEC. 4, TWP. 30N, RNG. 13W, 2nd PM, Latitude 41.106892, Longitude -87.835321

COUNTY Kankakee DRILLING METHOD Hollow Stem Auger HAMMER TYPE CME Automatic

STRUCT. NO. _____
Station _____

BORING NO. B 221
Station 235+00.78
Offset 44.1 ft Rt.
Ground Surface Elev. 630.55 ft

Surface Water Elev. _____ ft
Stream Bed Elev. _____ ft

Groundwater Elev.:
First Encounter _____ ft
Upon Completion _____ ft
After ____ Hrs. _____ ft

	DEPTH (ft)	BLOWS (/6")	UCS Qu (tsf)	MOIST (%)
Augered Material - Not Documented	623.55			
Rock encountered @ approximately 2' and Augered to 4'	626.55			
Borchole continued with rock coring.	-5			
	-10			
	-15			
	-20			

The Unconfined Compressive Strength (UCS) Failure Mode is indicated by (B-Bulge, S-Shear, P-Penetrometer)
The SPT (N value) is the sum of the last two blow values in each sampling zone (AASHTO T206)

BBS, form 137 (Rev. 8-99)

SOIL BORING I-57 & IL 17 INTERCHANGE.GPJ IL_DOT.GDT 2/5/18

Illinois Department of Transportation
Division of Highways
Illinois Department of Transportation

ROCK CORE LOG

Date 9/25/17

ROUTE I-57 (FAI 57) DESCRIPTION Retaining Wall South of Waldron Road over I-57 on West side of I-57 LOGGED BY Larry Myers

SECTION (46-3)R, HBK, 5HBR, 6HBR LOCATION SE 1/4, SEC. 4, TWP. 30N, RNG. 13W, 2nd PM, Latitude 41.106892, Longitude -87.835321

COUNTY Kankakee CORING METHOD Split Barrel Wire Line

STRUCT. NO. _____
Station _____

CORING BARREL TYPE & SIZE N W/L 2
Core Diameter 1.9 in
Top of Rock Elev. 628.55 ft
Begin Core Elev. 626.55 ft

BORING NO. B 221
Station 235+00.78
Offset 44.1 ft Rt.
Ground Surface Elev. 630.55 ft

	DEPTH (ft)	CORE (#)	RECOVERY (%)	R.Q.D. (%)	CORE TIME (min/ft)	STRENGTH (tsf)
Dense Gray & Tan Limestone with some Vertical Fracturing - Loose Joints	626.55	1	92	8	2.2	
	-5					711.5
Dense Gray Limestone with Horizontal Fracturing & Loose Joints, some Joint Faces Oxidized Tan	624.55					
	621.55					
Dense Gray Limestone, Tight Joints and Numerous Vertical Fractures	-10	2	100	13	2.4	611.3
	616.55					741.9
End of Boring	-15					
	-20					

Color pictures of the cores Yes
Cores will be stored for examination until Construction Complete
The "Strength" column represents the uniaxial compressive strength of the core sample (ASTM D-2938)

BBS, form 138 (Rev. 8-99)

ROCK CORE I-57 & IL 17 INTERCHANGE.GPJ IL_DOT.GDT 2/5/18

Prairie Engineers, P.C. www.prairieengineers.com professional design firm no. 184-005965 © Copyright Prairie Engineers, P.C. 2018	USER NAME =	DESIGNED - RHC	REVISED -	STATE OF ILLINOIS DEPARTMENT OF TRANSPORTATION	WALL A SOIL BORINGS STRUCTURE NO. 046-0153
		CHECKED - CMF	REVISED -		
	PLOT SCALE =	DRAWN - JLM	REVISED -		
	PLOT DATE =	CHECKED - SMA	REVISED -		SHEET 17 OF 23 SHEETS

F.A.I. RTE.	SECTION	COUNTY	TOTAL SHEETS	SHEET NO.
57	139HBR-6	KANKAKEE	202	160
			CONTRACT NO. 66997	
		ILLINOIS	FED. AID PROJECT	

MODEL: 046O153-66997-016-021
FILE NAME: I:\jobs\2019\193.1901 PTB 192-011 District 3 Various Phase III Structure Projects\WO 2 - Waldron Road over I-57\Drawings\wall A\Sheet\046O153-66997-016-021-Wall A-soil borings.dgn

3/18/2021 3:49:14 PM

Illinois Department of Transportation
Division of Highways
Illinois Department of Transportation

SOIL BORING LOG

Date 9/25/17

ROUTE I-57 (FAI 57) DESCRIPTION Retaining Wall South of Waldron Road over I-57 on West side of I-57 LOGGED BY Larry Myers

SECTION (46-3)R, HBK, 5HBR, 6HBR LOCATION SE 1/4, SEC. 4, TWP. 30N, RNG. 13W, 2nd PM, Latitude 41.10729, Longitude -87.835345

COUNTY Kankakee DRILLING METHOD Hollow Stem Auger HAMMER TYPE CME Automatic

STRUCT. NO. _____
Station _____

BORING NO. B 222
Station 233+55.44
Offset 46.2 ft Rt.
Ground Surface Elev. 630.64 ft

Surface Water Elev. _____ ft
Stream Bed Elev. _____ ft

Groundwater Elev.:
First Encounter _____ ft
Upon Completion _____ ft
After ____ Hrs. _____ ft

	DEPTH (ft)	BLOWS (/6")	UCS Qu (tsf)	MOIST (%)
Augered Material - Not Documented				
623.64				
Rock encountered @ approximately 2' and Augered to 4'				
626.64				
Borehole continued with rock coring.	-5			
	-10			
	-15			
	-20			

The Unconfined Compressive Strength (UCS) Failure Mode is indicated by (B-Bulge, S-Shear, P-Penetrometer)
The SPT (N value) is the sum of the last two blow values in each sampling zone (AASHTO T206)

BBS, form 137 (Rev. 8-99)

SOIL BORING I-57 & IL 17 INTERCHANGE.GPJ IL_DOT.GDT 2/5/18

Illinois Department of Transportation
Division of Highways
Illinois Department of Transportation

ROCK CORE LOG

Date 9/25/17

ROUTE I-57 (FAI 57) DESCRIPTION Retaining Wall South of Waldron Road over I-57 on West side of I-57 LOGGED BY Larry Myers

SECTION (46-3)R, HBK, 5HBR, 6HBR LOCATION SE 1/4, SEC. 4, TWP. 30N, RNG. 13W, 2nd PM, Latitude 41.10729, Longitude -87.835345

COUNTY Kankakee CORING METHOD Split Barrel Wire Line

STRUCT. NO. _____
Station _____

CORING BARREL TYPE & SIZE N W/L 2
Core Diameter 1.9 in
Top of Rock Elev. 628.64 ft
Begin Core Elev. 626.64 ft

BORING NO. B 222
Station 233+55.44
Offset 46.2 ft Rt.
Ground Surface Elev. 630.64 ft

	DEPTH (ft)	CORE (#)	RECOVERY (%)	R.Q.D. (%)	CORE TIME (min/ft)	STRENGTH (tsf)
Dense Gray Limestone, some Tan Oxidation at Joints, Horizontal Fractures & Relatively Tight Joints	626.64	1	97	13	2	
	-5					770.3
	621.64					749.7
Dense Gray Limestone with some Tan Oxidation at Joints, Horizontal Fractures with Relatively Tight Joints	-10	2	100	75	2.8	832.1
	616.64					734.6
End of Boring	-15					765.4
	-20					

Color pictures of the cores Yes
Cores will be stored for examination until Construction Complete
The "Strength" column represents the uniaxial compressive strength of the core sample (ASTM D-2938)

BBS, form 138 (Rev. 8-99)

ROCK CORE I-57 & IL 17 INTERCHANGE.GPJ IL_DOT.GDT 2/5/18

MODEL: 046O153-66997-016-021
FILE NAME: I:\jobs\2019\193.1901 PTB 192-011 District 3 Various Phase III Structure Projects\WO 2 - Waldron Road over I-57\Drawings\wall A\Sheet\046O153-66997-016-021-Wall A-soil borings.dgn
3/18/2021 3:51:34 PM

Prairie Engineers, P.C.
www.prairieengineers.com
professional design firm no. 184-005965
© Copyright Prairie Engineers, P.C. 2018

USER NAME =	DESIGNED - RHC	REVISED -	
	CHECKED - CMF	REVISED -	
PLOT SCALE =	DRAWN - JLM	REVISED -	
PLOT DATE =	CHECKED - SMA	REVISED -	

STATE OF ILLINOIS
DEPARTMENT OF TRANSPORTATION

WALL A SOIL BORINGS
STRUCTURE NO. 046-0153
SHEET 18 OF 23 SHEETS

F.A.I. RTE.	SECTION	COUNTY	TOTAL SHEETS	SHEET NO.
57	139HBR-6	KANKAKEE	202	161
			CONTRACT NO. 66997	
		ILLINOIS	FED. AID PROJECT	

Illinois Department of Transportation
Division of Highways
Illinois Department of Transportation

SOIL BORING LOG

Date 9/13/17

ROUTE I-57 (FAI 57) DESCRIPTION Retaining Wall South of Waldron Road over I-57 on West side of I-57 LOGGED BY Larry Myers

SECTION (46-3)R, HBK, 5HBR, 6HBR LOCATION SE 1/4, **SEC.** 4, **TWP.** 30N, **RNG.** 13W, 2nd **PM**, **Latitude** 41.107697, **Longitude** -87.835316

COUNTY Kankakee DRILLING METHOD Hollow Stem Auger HAMMER TYPE CME Automatic

STRUCT. NO. _____
Station _____

BORING NO. B 223
Station 232+07.62
Offset 33.5 ft Rt.
Ground Surface Elev. 632.47 ft

Surface Water Elev. _____ ft
Stream Bed Elev. _____ ft

Groundwater Elev.:
First Encounter _____ ft
Upon Completion _____ ft
After ____ Hrs. _____ ft

	DEPTH (ft)	BLOWS (/6")	UCS Qu (tsf)	MOIST (%)
Augered Material - Not Documented	629.47			
Borehole continued with rock coring.	-5			
	-10			
	-15			
	-20			

The Unconfined Compressive Strength (UCS) Failure Mode is indicated by (B-Bulge, S-Shear, P-Penetrometer)
The SPT (N value) is the sum of the last two blow values in each sampling zone (AASHTO T206)

BBS, form 137 (Rev. 8-99)

SOIL BORING I-57 & IL 17 INTERCHANGE.GPJ IL_DOT.GDT 2/5/18

Illinois Department of Transportation
Division of Highways
Illinois Department of Transportation

ROCK CORE LOG

Date 9/13/17

ROUTE I-57 (FAI 57) DESCRIPTION Retaining Wall South of Waldron Road over I-57 on West side of I-57 LOGGED BY Larry Myers

SECTION (46-3)R, HBK, 5HBR, 6HBR LOCATION SE 1/4, **SEC.** 4, **TWP.** 30N, **RNG.** 13W, 2nd **PM**, **Latitude** 41.107697, **Longitude** -87.835316

COUNTY Kankakee CORING METHOD Split Barrel Wire Line

STRUCT. NO. _____
Station _____

CORING BARREL TYPE & SIZE N W/L 2
Core Diameter 1.9 in
Top of Rock Elev. 629.47 ft
Begin Core Elev. 629.47 ft

BORING NO. B 223
Station 232+07.62
Offset 33.5 ft Rt.
Ground Surface Elev. 632.47 ft

	DEPTH (ft)	CORE (#)	RECOVERY (%)	R.Q.D. (%)	CORE TIME (min/ft)	STRENGTH (tsf)
Tan to Gray Limestone with some Horizontal Fracturing, Joint Faces Oxidized Tan Color	629.47	1	83	37	2.6	744.9 585.6
	-5					
	624.47					807.1
Gray Limestone with some Horizontal Fracturing, Joint Faces Oxidized Tan Color		2	100	37	2.8	872.1
	-10					
	619.47					803.2 771.2
End of Boring						746.6
	-15					
	-20					

Color pictures of the cores Yes
Cores will be stored for examination until Construction Complete
The "Strength" column represents the uniaxial compressive strength of the core sample (ASTM D-2938)

BBS, form 138 (Rev. 8-99)

ROCK CORE I-57 & IL 17 INTERCHANGE.GPJ IL_DOT.GDT 2/5/18

MODEL: 046O153-66997-016-021
FILE NAME: I:\jobs\2019\193.1901 PTB 192-011 District 3 Various Phase III Structure Projects\WO 2 - Waldron Road over I-57\Drawings\wall A\Sheet\046O153-66997-016-021-Wall A-soil borings.dgn
3/18/2021 3:53:09 PM

Prairie Engineers, P.C.
www.prairieengineers.com
professional design firm no. 184-005965
© Copyright Prairie Engineers, P.C. 2018

USER NAME =	DESIGNED - RHC	REVISED -	
	CHECKED - CMF	REVISED -	
PLOT SCALE =	DRAWN - JLM	REVISED -	
PLOT DATE =	CHECKED - SMA	REVISED -	

STATE OF ILLINOIS
DEPARTMENT OF TRANSPORTATION

WALL A SOIL BORINGS
STRUCTURE NO. 046-0153
SHEET 19 OF 23 SHEETS

F.A.I. RTE.	SECTION	COUNTY	TOTAL SHEETS	SHEET NO.
57	139HBR-6	KANKAKEE	202	162
			CONTRACT NO. 66997	
		ILLINOIS	FED. AID PROJECT	

3705 Progress Blvd
Peru, Il 61354
815 780-8486

SOIL BORING LOG

Solutions You Can Build On

Date 12/18/17

ROUTE FAI 57 DESCRIPTION Retaining wall west of I-57, south of K B & S Railroad Crossing LOGGED BY TLM

SECTION (46-3)R,HBK,5HBR,6HBR LOCATION SE 1/4, **SEC.** 4, **TWP.** 30N, **RNG.** 13W, 2nd **PM**, **Latitude** 41.108997, **Longitude** -87.835784

COUNTY Kankakee DRILLING METHOD Hollow Stem Auger HAMMER TYPE CME Automatic

STRUCT. NO. _____
Station _____

BORING NO. B-224
Station 227+30
Offset 148.0 ft Rt.
Ground Surface Elev. 650.69 ft

Surface Water Elev. _____ ft
Stream Bed Elev. _____ ft

Groundwater Elev.:
First Encounter dry ft
Upon Completion dry ft
After _____ Hrs. _____ ft

DEPTH (ft)	BLOWS (/6")	UCS Qu (tsf)	MOIST (%)
Brown Topsoil, Silty Loam Timber Soil, moist			
649.19	4		
Hard brown & gray Silty Clay, dry	10 14	4.5 P	18
	7		
	11 18	4.5 P	16
-5 645.19			
Hard brown Silty Clay, dry	9		
	15 20	4.5 P	14
642.69			
Hard brown & dark gray Silty Clay Till	7		
	12 19	4.5 P	15
-10 640.19			
Hard gray Clay, trace fine gravel	5		
	9 11	7.0 B	18
	5		
	5 9	4.7 B	17
-15 635.19			
Very stiff gray Clay	3		
	5 8	3.1 B	19
	3		
-20	5 7	2.9 B	21

DEPTH (ft)	BLOWS (/6")	UCS Qu (tsf)	MOIST (%)
Very stiff gray Clay *(continued)*			
629.19	3		
Hard drilling, hard gray Clay Till, gravel pieces > 1/2" in dia.	6	2.5	12
	8	B	
		4.5 P	
	6		
626.19	18	5.2	5
-25 Fractured and very weathered brown & gray Dolostone	94	B	
	85/1"		
			5
	50/.25"		
			4
620.69 -30			
Borehole continued with rock coring.			
-35			
-40			

The Unconfined Compressive Strength (UCS) Failure Mode is indicated by (B-Bulge, S-Shear, P-Penetrometer)
The SPT (N value) is the sum of the last two blow values in each sampling zone (AASHTO T206)

BBS, form 137 (Rev. 8-99)

3705 Progress Blvd
Peru, Il 61354
815 780-8486

ROCK CORE LOG

Solutions You Can Build On

Date 12/18/17

ROUTE FAI 57 DESCRIPTION Retaining wall west of I-57, south of K B & S Railroad Crossing LOGGED BY TLM

SECTION (46-3)R,HBK,5HBR,6HBR LOCATION SE 1/4, **SEC.** 4, **TWP.** 30N, **RNG.** 13W, 2nd **PM**, **Latitude** 41.108997, **Longitude** -87.835784

COUNTY Kankakee CORING METHOD Wireline

STRUCT. NO. _____
Station _____

CORING BARREL TYPE & SIZE NQ
Core Diameter 2 in
Top of Rock Elev. 624.69 ft
Begin Core Elev. 620.69 ft

BORING NO. B-224
Station 227+30
Offset 148.0 ft Rt.
Ground Surface Elev. 650.69 ft

DEPTH (ft)	CORE (#)	RECOVERY (%)	R.Q.D. (%)	CORE TIME (min/ft)	STRENGTH (tsf)
Brown & gray fractured Dolostone with Shale partings	1	100	0	4	
620.69					
619.19					
Gray Dolostone with frequent & thin Shale partings. Crystal lined void approximately 2" wide x 0.5" tall & 1.5" deep. Some pyrite present in void. Void is 2.92' down from top of rock.	2	100	13	2	
-35					769.0
					796.0
610.69 -40					235.0
End of Boring					
-45					
-50					

Color pictures of the cores Yes
Cores will be stored for examination until _____
The "Strength" column represents the uniaxial compressive strength of the core sample (ASTM D-2938)

BBS, form 138 (Rev. 8-99)

ROCK CORE I-57 RETAINING WALLS (2P).I. DOT.GDT 2/7/18

MODEL: 0460153-66997-016-021
FILE NAME: I:\Jobs\2019\193.1901 PTB 192-011 District 3 Various Phase III Structure Projects\WO 2 - Waldron Road over I-57\Drawings\wall A\Sheet\0460153-66997-016-021-Wall A-soil borings.dgn

3/18/2021 3:54:34 PM

Prairie Engineers, P.C.
www.prairieengineers.com
professional design firm no. 184-005965
© Copyright Prairie Engineers, P.C. 2018

USER NAME =	DESIGNED - RHC	REVISED -	
	CHECKED - CMF	REVISED -	
PLOT SCALE =	DRAWN - JLM	REVISED -	
PLOT DATE =	CHECKED - SMA	REVISED -	

STATE OF ILLINOIS
DEPARTMENT OF TRANSPORTATION

WALL A SOIL BORINGS
STRUCTURE NO. 046-0153
SHEET 20 OF 23 SHEETS

F.A.I. RTE.	SECTION	COUNTY	TOTAL SHEETS	SHEET NO.
57	139HBR-6	KANKAKEE	202	163
		CONTRACT NO. 66997		
	ILLINOIS	FED. AID PROJECT		

Illinois Department of Transportation
Division of Highways
IDOT

SOIL BORING LOG

Page 1 of 1

Date 3/27/10

ROUTE I-57 (FAI 57) DESCRIPTION Waldron Road over I-57, Retaining Wall Soil Investigation LOGGED BY Larry Myers

SECTION (46-3)R, HBK, 5HBR, 6HBR LOCATION SE 1/4, **SEC.** 4, **TWP.** 30N, **RNG.** 13W, **Latitude** 41.108482, **Longitude** -87.835524

COUNTY Kankakee DRILLING METHOD Hollow Stem Auger HAMMER TYPE CME Automatic

STRUCT. NO. 046-0080
Station 230+53.99 (Exist.)
BORING NO. BH 101 (NW Quad.)
Station 229+13.97
Offset 82.1 ft Rt.
Ground Surface Elev. 657.19 ft

Surface Water Elev. ____ ft
Stream Bed Elev. ____ ft
Groundwater Elev.:
First Encounter ____ ft
Upon Completion ____ ft
After ____ Hrs. ____ ft

DEPTH (ft)	BLOWS (/6")	UCS Qu (tsf)	MOIST (%)
Augered Bituminous, Sand & Gravel & Black, Gray, Silty Clay Loam Fill			
654.69			
Very Stiff to Hard, Gray/Brown/Black, Silty Loam/Silty Clay Loam Till Fill with Rock & Concrete Debris	4		
	5 6	3.5 P	23
-5	3		
	4 5	3.5 P	18
648.69	3 5		
Hard Gray & Brown Silty Clay/Silty Clay Loam	8	4.3 S	22
647.19 -10			
Hard, Brown, Silty Clay Loam Till	8		
	12 14	8.2 S	17
	9		
	10 11	8.2 S	19
642.19 -15			
Very Stiff Brown Silty Loam Till with Silt Layers	3		
	4 5	3.0 P	20
	3		
	4 5	3.0 P	18
637.69			
-20			

DEPTH (ft)	BLOWS (/6")	UCS Qu (tsf)	MOIST (%)
Hard Brown to Gray Silty Clay/Silty Clay Loam Till *(continued)*	5		
	6 7	4.6 S	19
	3		
	5 7	4.0 S	22
632.19 -25	4		
Hard Gray Silty Clay Loam Till with Large Gravel Pieces	8 12	4.0 P	12
629.69			
Assumed Dolostone Surface, Auger Refusal End of Boring	100/11	No Recovery	
-30			
-35			
-40			

The Unconfined Compressive Strength (UCS) Failure Mode is indicated by (B-Bulge, S-Shear, P-Penetrometer)
The SPT (N value) is the sum of the last two blow values in each sampling zone (AASHTO T206)

BBS, form 137 (Rev. 8-99)

Illinois Department of Transportation
Division of Highways
Illinois Department of Transportation

SOIL BORING LOG

Page 1 of 1

Date 9/7/17

ROUTE I-57 (FAI 57) DESCRIPTION Waldron Road over I-57, 3.4 miles North of US 45/52 LOGGED BY Larry Myers

SECTION (46-3)R, HBK, 5HBR, 6HBR LOCATION SE 1/4, **SEC.** 4, **TWP.** 30N, **RNG.** 13W, 2nd **PM**, **Latitude** 41.108486, **Longitude** -87.835544

COUNTY Kankakee DRILLING METHOD Hollow Stem Auger HAMMER TYPE CME Automatic

STRUCT. NO. 046-0080 (EX)
Station 230+53.99 (EX)
BORING NO. B 219 (N. Abut.)
Station 229+18.36
Offset 87.5 ft Rt.
Ground Surface Elev. 657.30 ft

Surface Water Elev. ____ ft
Stream Bed Elev. ____ ft
Groundwater Elev.:
First Encounter ____ ft
Upon Completion ____ ft
After ____ Hrs. ____ ft

DEPTH (ft)	BLOWS (/6")	UCS Qu (tsf)	MOIST (%)
Augered Material - Not Documented			
-5			
-10			
-15			
-20			

DEPTH (ft)	BLOWS (/6")	UCS Qu (tsf)	MOIST (%)
Augered Material - Not Documented *(continued)*			
-25			
-30			
-35			
624.80			
Borehole continued with rock coring.			
-40			

The Unconfined Compressive Strength (UCS) Failure Mode is indicated by (B-Bulge, S-Shear, P-Penetrometer)
The SPT (N value) is the sum of the last two blow values in each sampling zone (AASHTO T206)

BBS, form 137 (Rev. 8-99)

Illinois Department of Transportation
Division of Highways
Illinois Department of Transportation

ROCK CORE LOG

Page 1 of 1

Date 9/7/17

ROUTE I-57 (FAI 57) DESCRIPTION Waldron Road over I-57, 3.4 miles North of US 45/52 LOGGED BY Larry Myers

SECTION (46-3)R, HBK, 5HBR, 6HBR LOCATION SE 1/4, **SEC.** 4, **TWP.** 30N, **RNG.** 13W, 2nd **PM**, **Latitude** 41.108486, **Longitude** -87.835544

COUNTY Kankakee CORING METHOD Split Barrel Wire Line

STRUCT. NO. 046-0080 (EX)
Station 230+53.99 (EX)
BORING NO. B 219 (N. Abut.)
Station 229+18.36
Offset 87.5 ft Rt.
Ground Surface Elev. 657.30 ft

CORING BARREL TYPE & SIZE N W/L 2
Core Diameter 1.9 in
Top of Rock Elev. 624.80 ft
Begin Core Elev. 624.80 ft

DEPTH (ft)	CORE (#)	RECOVERY (%)	R.Q.D. (%)	CORE TIME (min/ft)	STRENGTH (tsf)
Dense Gray Limestone with Generally Tight Horizontal Fractures, Interbedded Thin Shale Seams in top 6" Minor Calcite Crystal Vug Fill	1	97	28	2.2	
-35					895.1
					822.2
619.80					732.4
Dense Gray Limestone with Tight Horizontal Fracturing Minor Calcite Crystal Vug Fill	2	100	55	1.6	1359.7
-40					1354.8
					1156.4
614.80					
Dense Gray Limestone with Tight Horizontal Fractures Minor Calcite Crystal Vug Fill	3	100	83	3.2	
-45					1005.9
					1198.5
					598.8
609.80					809.0
End of Boring					
-50					

Color pictures of the cores Yes
Cores will be stored for examination until Construction Complete
The "Strength" column represents the uniaxial compressive strength of the core sample (ASTM D-2938)

BBS, form 138 (Rev. 8-99)

Mc Cleary Engineering
3705 Progress Blvd
Peru, Il 61354
815 780-8486

SOIL BORING LOG

Solutions You Can Build On

Date 12/21/17

ROUTE FAI 57 DESCRIPTION Retaining wall east of I-57, south of Waldron Road LOGGED BY TMR

SECTION (46-3)R,HBK,5HBR,6HBR LOCATION SE 1/4, **SEC.** 4, **TWP.** 30N, **RNG.** 13W, 2nd **PM**, **Latitude** 41.107577, **Longitude** -87.835013

COUNTY Kankakee DRILLING METHOD Hollow Stem Auger HAMMER TYPE CME Automatic

STRUCT. NO. _____
Station _____

BORING NO. B-220
Station 232+54
Offset 48.0 ft Lt.
Ground Surface Elev. 634.83 ft

Surface Water Elev. _____ ft
Stream Bed Elev. _____ ft

Groundwater Elev.:
First Encounter dry ft
Upon Completion dry ft
After _____ Hrs. _____ ft

	DEPTH (ft)	BLOWS (/6")	UCS Qu (tsf)	MOIST (%)
6" Brown Silty Clay Topsoil 634.33				
Dense Light Brown Silty Sandy Gravel w/ trace Clay		11		
		46 21	-	11
		26		
630.33	-5	23 50/2"	-	8
Weathered fractured Dolostone				
626.33				
Borehole continued with rock coring.	-10			
	-15			
	-20			

The Unconfined Compressive Strength (UCS) Failure Mode is indicated by (B-Bulge, S-Shear, P-Penetrometer)
The SPT (N value) is the sum of the last two blow values in each sampling zone (AASHTO T206)

BBS, form 137 (Rev. 8-99)

Mc Cleary Engineering
3705 Progress Blvd
Peru, Il 61354
815 780-8486

ROCK CORE LOG

Solutions You Can Build On

Date 12/21/17

ROUTE FAI 57 DESCRIPTION Retaining wall east of I-57, south of Waldron Road LOGGED BY TMR

SECTION (46-3)R,HBK,5HBR,6HBR LOCATION SE 1/4, **SEC.** 4, **TWP.** 30N, **RNG.** 13W, 2nd **PM**, **Latitude** 41.107577, **Longitude** -87.835013

COUNTY Kankakee CORING METHOD Wireline

STRUCT. NO. _____
Station _____

CORING BARREL TYPE & SIZE NQ

BORING NO. B-220
Station 232+54
Offset 48.0 ft Lt.
Ground Surface Elev. 634.83 ft

Core Diameter 2 in
Top of Rock Elev. 630.33 ft
Begin Core Elev. 626.33 ft

	DEPTH (ft)	CORE (#)	RECOVERY (%)	R.Q.D. (%)	CORE TIME (min/ft)	STRENGTH (tsf)
Gray Dolostone 626.33		1	100	68	1.65	
	-10					543.0
623.33						
Brown Dolostone						
622.33						
Gray Dolostone, Crystal solution void @ 12.66' 3/4" W x 1/2" H						
	-15					489.0
						358.0
616.33						398.0
End of Boring	-20					
	-25					

Color pictures of the cores Yes
Cores will be stored for examination until _____
The "Strength" column represents the uniaxial compressive strength of the core sample (ASTM D-2938)

BBS, form 138 (Rev. 8-99)

ROCK CORE I-57 RETAINING WALLS.GPJ IL_DOT.GDT 2/1/18

MODEL: 046153-66997-022-023
FILE NAME: I:\jobs\2019\193.1901 PTB 192-011 District 3 Various Phase III Structure Projects\WO 2 - Waldron Road over I-57\Drawings\wall B\Sheet\046153-66997-022-023-Wall B-soil borings.dgn

3/18/2021 4:01:16 PM

Prairie Engineers, P.C.
www.prairieengineers.com
professional design firm no. 184-005965
© Copyright Prairie Engineers, P.C. 2018

USER NAME =		DESIGNED - RHC	REVISED -	
		CHECKED - CMF	REVISED -	
PLOT SCALE =		DRAWN - JLM	REVISED -	
PLOT DATE =		CHECKED - SMA	REVISED -	

STATE OF ILLINOIS
DEPARTMENT OF TRANSPORTATION

WALL B SOIL BORINGS
STRUCTURE NO. 046-0153
SHEET 22 OF 23 SHEETS

F.A.I. RTE.	SECTION	COUNTY	TOTAL SHEETS	SHEET NO.
57	139HBR-6	KANKAKEE	202	165
		CONTRACT NO. 66997		
	ILLINOIS	FED. AID PROJECT		

Illinois Department of Transportation
Division of Highways
Illinois Department of Transportation

SOIL BORING LOG

Date 9/8/17

ROUTE I-57 (FAI 57) DESCRIPTION Waldron Road over I-57, 3.4 miles North of US 45/52 LOGGED BY Larry Myers

SECTION (46-3)R, HBK, 5HBR, 6HBR LOCATION SE 1/4, **SEC.** 4, **TWP.** 30N, **RNG.** 13W, 2nd **PM**, **Latitude** 41.107696, **Longitude** -87.83471

COUNTY Kankakee DRILLING METHOD Hollow Stem Auger HAMMER TYPE CME Automatic

STRUCT. NO. 046-0080 (EX)
Station 230+53.99 (EX)

BORING NO. B 217 (S. Abut.)
Station 232+12.99
Offset 133.4 ft Lt.
Ground Surface Elev. 648.76 ft

Surface Water Elev. _____ ft
Stream Bed Elev. _____ ft

Groundwater Elev.:
First Encounter _____ ft
Upon Completion _____ ft
After _____ **Hrs.** _____ ft

	DEPTH (ft)	BLOWS (/6")	UCS Qu (tsf)	MOIST (%)
Augered Material - Not Documented				
	-5			
	-10			
	-15			
	632.76			
Borehole continued with rock coring.				
	-20			

SOIL BORING I-57 & IL 17 INTERCHANGE GPJ IL_DOT.GDT 2/5/18

The Unconfined Compressive Strength (UCS) Failure Mode is indicated by (B-Bulge, S-Shear, P-Penetrometer)
The SPT (N value) is the sum of the last two blow values in each sampling zone (AASHTO T206)

BBS, form 137 (Rev. 8-99)

Illinois Department of Transportation
Division of Highways
Illinois Department of Transportation

ROCK CORE LOG

Date 9/8/17

ROUTE I-57 (FAI 57) DESCRIPTION Waldron Road over I-57, 3.4 miles North of US 45/52 LOGGED BY Larry Myers

SECTION (46-3)R, HBK, 5HBR, 6HBR LOCATION SE 1/4, **SEC.** 4, **TWP.** 30N, **RNG.** 13W, 2nd **PM**, **Latitude** 41.107696, **Longitude** -87.83471

COUNTY Kankakee CORING METHOD Split Barrel Wire Line

STRUCT. NO. 046-0080 (EX)
Station 230+53.99 (EX)

CORING BARREL TYPE & SIZE N W/L 2
Core Diameter 1.9 in
Top of Rock Elev. 632.76 ft
Begin Core Elev. 632.76 ft

BORING NO. B 217 (S. Abut.)
Station 232+12.99
Offset 133.4 ft Lt.
Ground Surface Elev. 648.76 ft

	DEPTH (ft)	CORE (#)	RECOVERY (%)	R.Q.D. (%)	CORE TIME (min/ft)	STRENGTH (tsf)
Tan Dolostone Highly Horizontally Fractured with most Seams Filled with Weathered Shale, Loose Joints	632.76	1	90	0	2.4	
	-20					
	627.76					
Tan to Gray Dolostone - Horizontally Fractured with Loose Joints, some Vertical Fractures		2	90	48	3	711.3 766.8 761.6 655.0 798.9
	-25					
	622.76					
Gray Limestone with some Loose Horizontal Fracturing and Heavy Vertical Fracturing, Horizontal Joints are Oxidized Tan Color		3	100	22	2.8	875.5 691.3
	-30					
	617.76					
End of Boring						
	-35					

ROCK CORE I-57 & IL 17 INTERCHANGE GPJ IL_DOT.GDT 2/5/18

Color pictures of the cores Yes
Cores will be stored for examination until Construction Complete
The "Strength" column represents the uniaxial compressive strength of the core sample (ASTM D-2938)

BBS, form 138 (Rev. 8-99)

MODEL: 046153-66997-022-023
FILE NAME: I:\jobs\2019\193.1901 PTB 192-011 District 3 Various Phase III Structure Projects\WO 2 - Waldron Road over I-57\Drawings\wall B\Sheet\046153-66997-022-023-Wall B-soil borings.dgn
3/18/2021 4:03:05 PM

Prairie Engineers, P.C.
www.prairieengineers.com
professional design firm no. 184-005965
© Copyright Prairie Engineers, P.C. 2018

USER NAME =		DESIGNED - RHC	REVISED -	STATE OF ILLINOIS DEPARTMENT OF TRANSPORTATION	WALL B SOIL BORINGS STRUCTURE NO. 046-0153
		CHECKED - CMF	REVISED -		
PLOT SCALE =		DRAWN - JLM	REVISED -		
PLOT DATE =		CHECKED - SMA	REVISED -		SHEET 23 OF 23 SHEETS

F.A.I. RTE.	SECTION	COUNTY	TOTAL SHEETS	SHEET NO.
57	139HBR-6	KANKAKEE	202	166
			CONTRACT NO. 66997	
		ILLINOIS	FED. AID PROJECT	

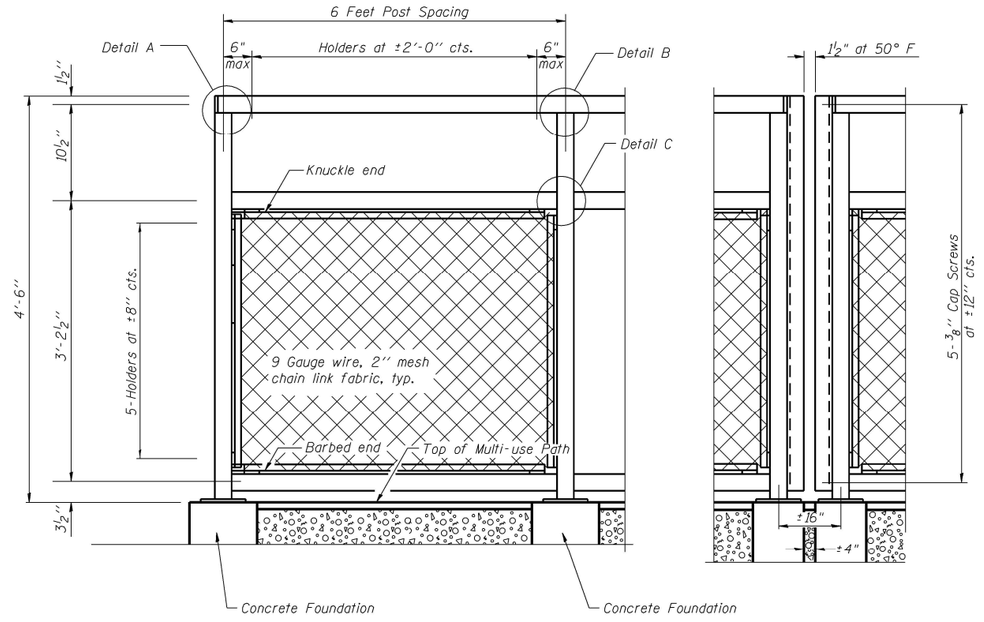

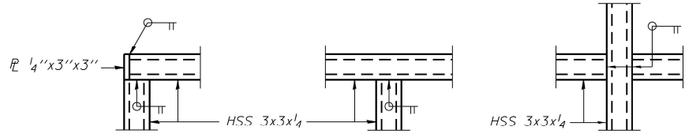

Notes:

1. *Field verify joint & light pole locations prior to fabricating.*
2. *All steel rail elements shall be galvanized according to Article 509.05 of the Standard Specifications.*
3. *All labor, equipment and materials necessary to furnish and install the concrete faundations for the Bicycle Railing posts shall be included in the contract unit price for BICYCLE RAILING.*

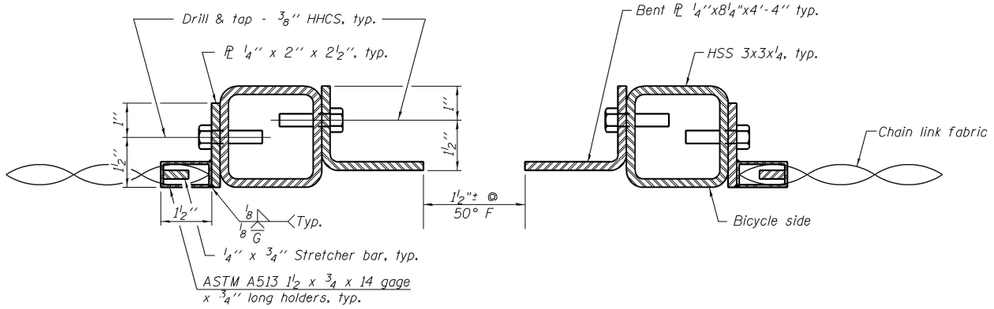

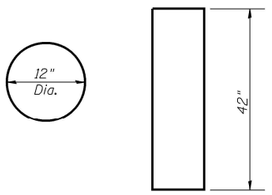

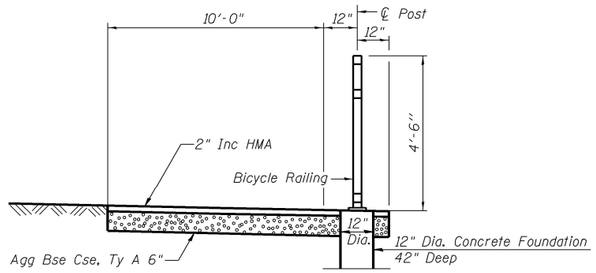

Item	Unit	Quantity
Bicycle Railing	Foot	469

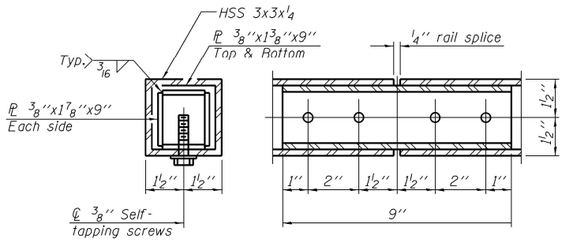

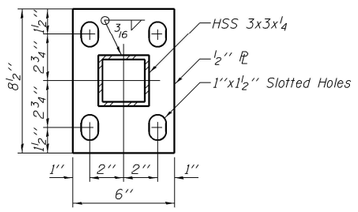

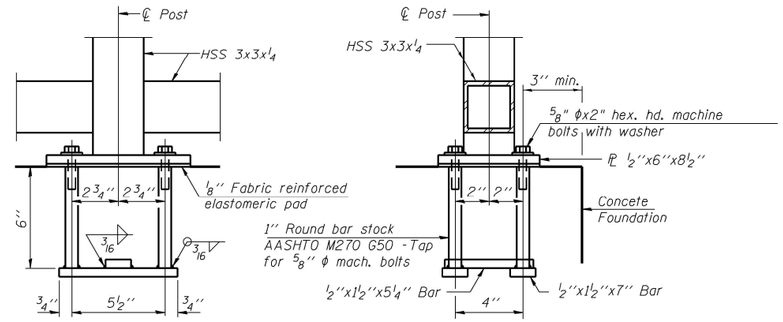

In lieu of the cast-in-place anchor device shown, the Contractor has the option of drilling and setting ⅝" φ anchor rods according to Article 509.06 of the Standard Specifications. Embedment shall be according to the manufacturer's specifications.

MODEL: Plan 1
FILE NAME: D390883-SH-Detail-01.dgn

TranSmart
411 South Wells Street Suite 1000
Chicago, Illinois 60607

USER NAME = nsalehian	DESIGNED - BJD	REVISED -	
	DRAWN - BJD	REVISED -	
PLOT SCALE = 0.16666633 ' / In.	CHECKED - TW	REVISED -	
PLOT DATE = 3/29/2021	DATE - 2021/03/26	REVISED -	

STATE OF ILLINOIS
DEPARTMENT OF TRANSPORTATION

BICYCLE RAILING
DETAILS

SCALE: NTS | SHEET OF SHEETS | STA. | TO STA.

F.A.I. RTE.	SECTION	COUNTY	TOTAL SHEETS	SHEET NO.
57	139 HBR-6	KANKAKEE	&TOT	167
		CONTRACT NO. 66997		
	ILLINOIS FED. AID PROJECT			

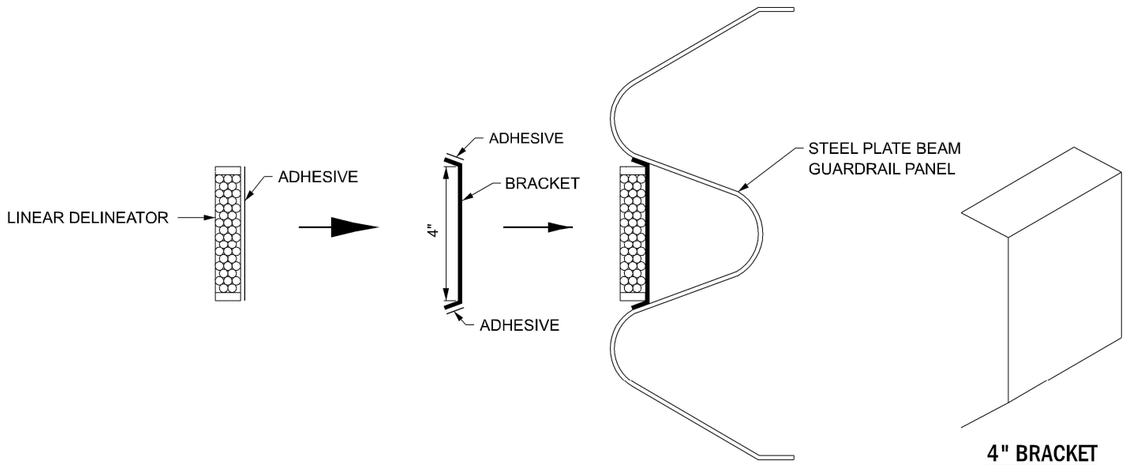

4" BRACKET

LINEATOR DELINEATOR APPLICATION TO STANDARD GALVANIZED GUARDRAIL

LINEATOR DELINEATOR SHALL BE APLLIED ACCORDING TO THE MANUFACTURER'S RECOMMENDATIONS

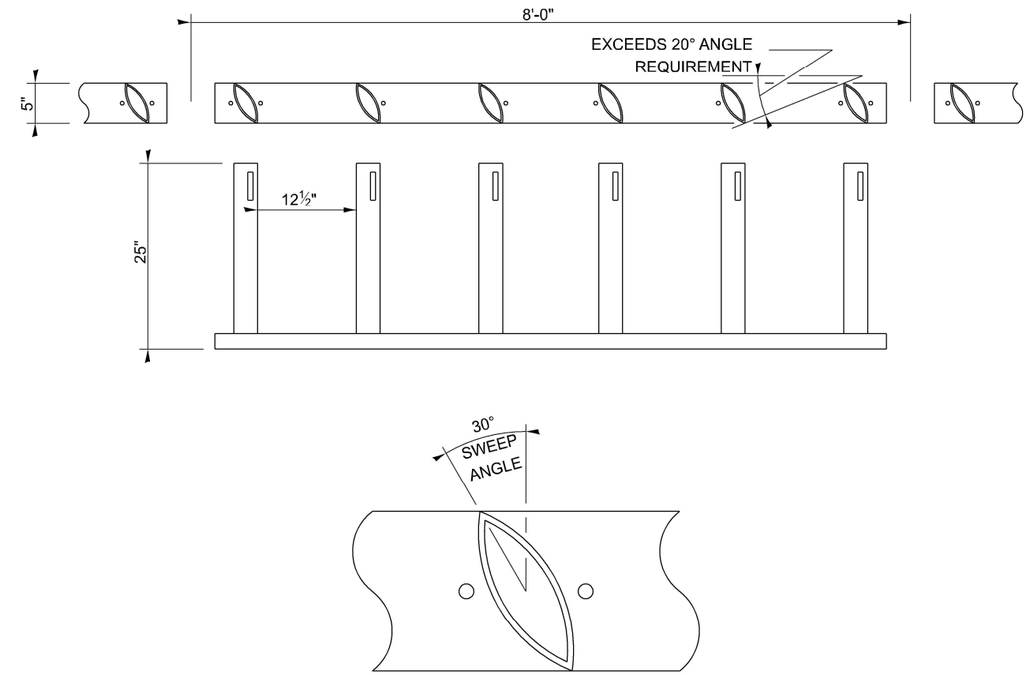

DETAIL DRAWING

MODULAR GLARE SCREEN BLADES

MODEL: Plan 1
FILE NAME: D366863-Sht-Detail-02.dgn

TranSmart
411 South Wells Street Suite 1000
Chicago, Illinois 60607

USER NAME = nsalehian	DESIGNED - NS	REVISED -	STATE OF ILLINOIS DEPARTMENT OF TRANSPORTATION
	DRAWN - NS	REVISED -	
PLOT SCALE = 0.16666633 ' / in.	CHECKED - TW	REVISED -	
PLOT DATE = 3/29/2021	DATE - 2021/03/26	REVISED -	

ROADWAY DETAILS
LINEAR DELINEATOR, 4" & MODULAR GLARE SCREEN

SCALE: NTS | SHEET OF SHEETS | STA. TO STA.

F.A.I. RTE.	SECTION	COUNTY	TOTAL SHEETS	SHEET NO.
57	139 HBR-6	KANKAKEE	&TOT	168
		CONTRACT NO. 66997		
		ILLINOIS	FED. AID PROJECT	

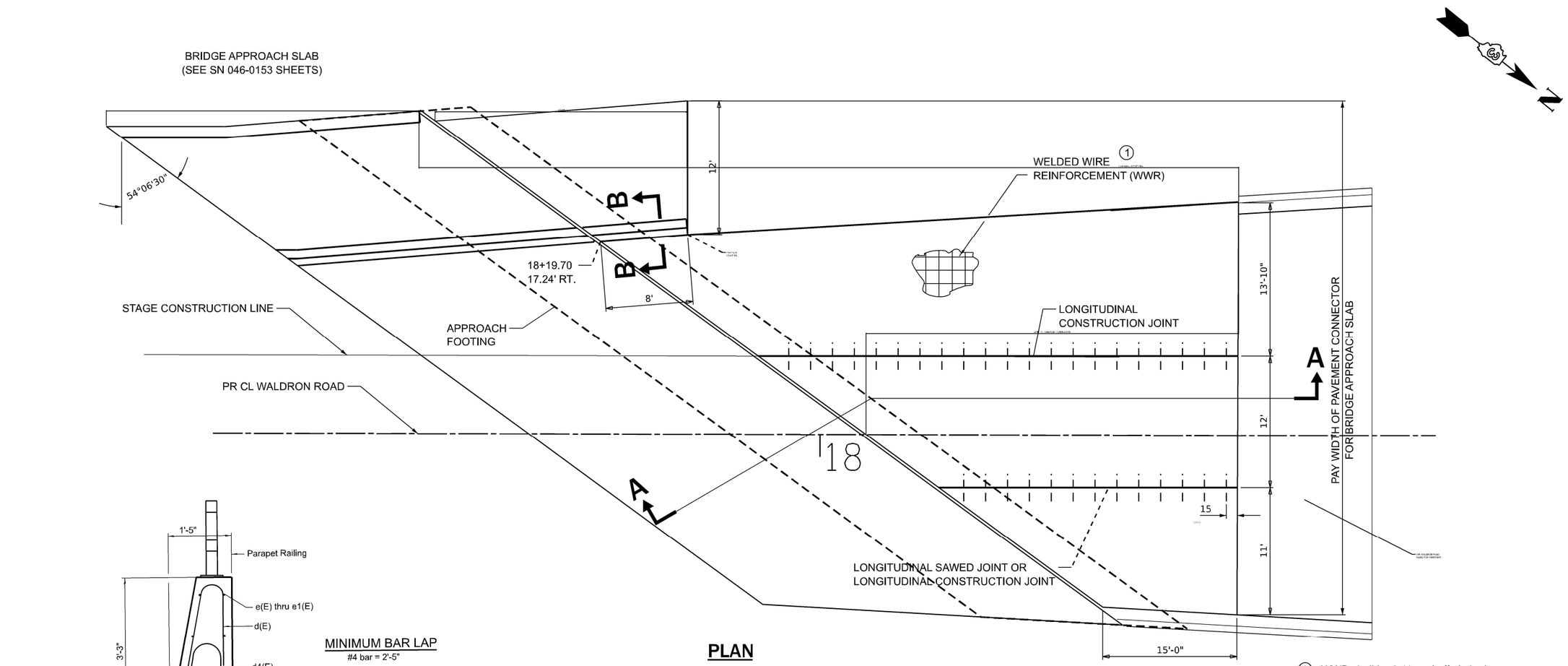

PLAN
NORTH PAVEMENT CONNECTOR

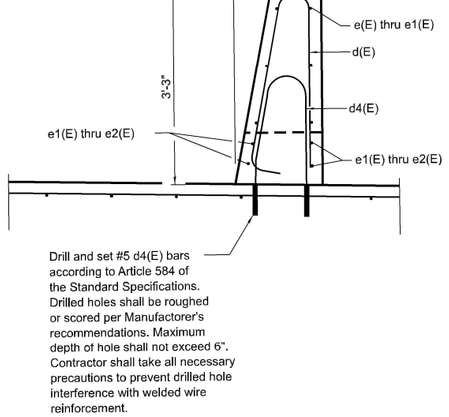

SECTION B-B

MINIMUM BAR LAP
#4 bar = 2'-5"

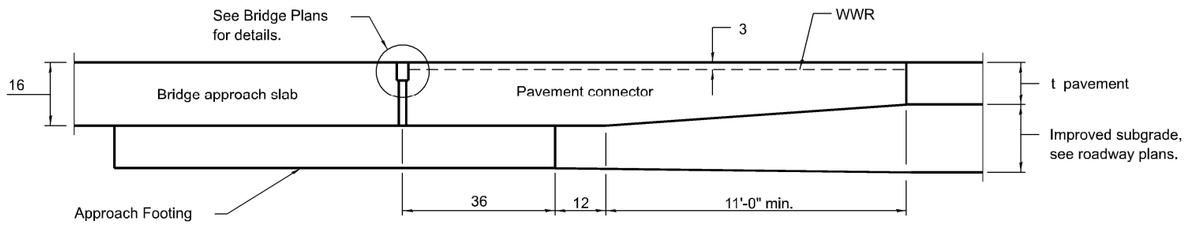

SECTION A-A

① WWR shall be 0.11 sq. in./ft. in both directions. Maximum wire spacing shall be 6 . Minimum lap distance shall be two cross wires.

GENERAL NOTES

THICKNESS-"t"=Thickness of Pavement.

Concrete barrier, reinforcement bars and parapet railing will be included in the cost of PAVEMENT CONNECTOR FOR BRIDGE APPROACH SLAB.

See Standard 420001 for pavement joint details not shown.

See Standard 610001 for shoulder inlet with curb when required.

See plans for details of bridge approach slab, approach footing and joint treatment.

All dimensions are in inches unless otherwise shown.

MODEL: Plan 1
FILE NAME: D366863-Sht-Detail-03.dgn

TranSmart
411 South Wells Street Suite 1000
Chicago, Illinois 60607

USER NAME = nsallehlan	DESIGNED - NS	REVISED -
	DRAWN - NS	REVISED -
PLOT SCALE = 0.16666633 ' / In.	CHECKED - TW	REVISED -
PLOT DATE = 3/29/2021	DATE - 2021/03/26	REVISED -

STATE OF ILLINOIS
DEPARTMENT OF TRANSPORTATION

PAVEMENT CONNECTOR (PCC)
FOR BRIDGE APPROACH SLAB

SCALE: NTS | SHEET 1 OF 2 SHEETS | STA. | TO STA.

F.A.I. RTE.	SECTION	COUNTY	TOTAL SHEETS	SHEET NO.
57	139 HBR-6	KANKAKEE	202	169
		CONTRACT NO. 66997		
		ILLINOIS	FED. AID PROJECT	

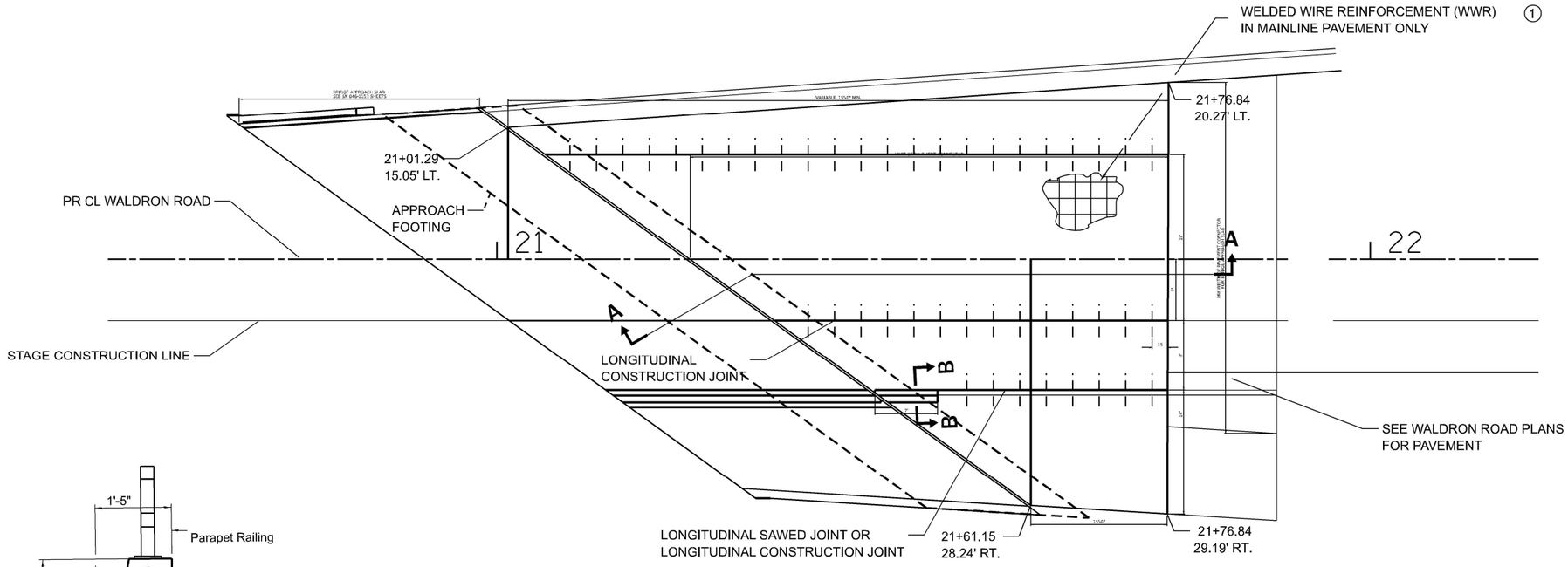

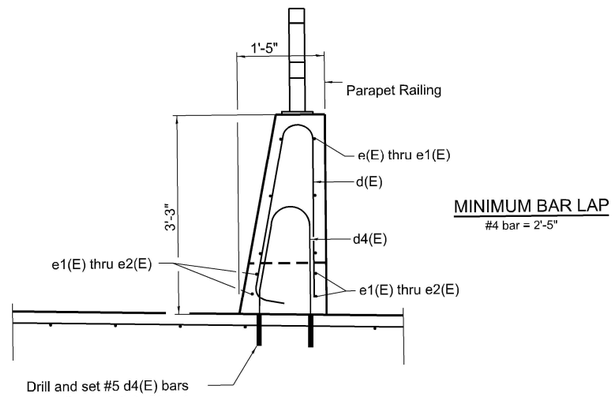

MINIMUM BAR LAP
#4 bar = 2'-5"

Drill and set #5 d4(E) bars according to Article 584 of the Standard Specifications. Drilled holes shall be roughed or scored per Manufactorer's recommendations. Maximum depth of hole shall not exceed 6". Contractor shall take all necessary precautions to prevent drilled hole interference with welded wire reinforcement.

PLAN
SOUTH PAVEMENT CONNECTOR

STA. 21+22 TO STA 21+75

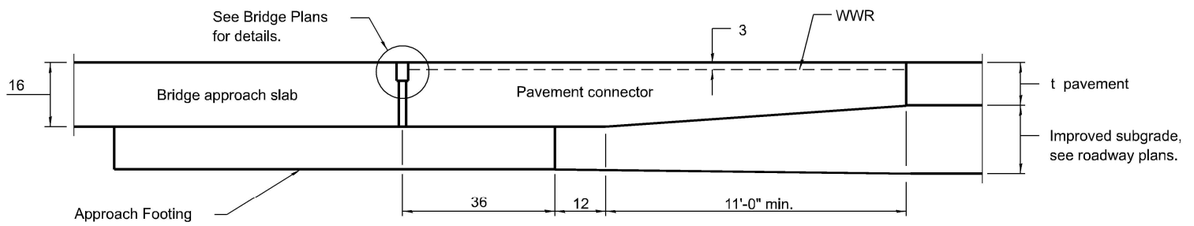

SECTION B-B

SECTION A-A

① WWR shall be 0.11 sq. in./ft. in both directions. Maximum wire spacing shall be 6 . Minimum lap distance shall be two cross wires.

GENERAL NOTES

THICKNESS-"t"=Thickness of Pavement.

Concrete barrier, reinforcement bars and parapet railing will be included in the cost of PAVEMENT CONNECTOR FOR BRIDGE APPROACH SLAB.

See Standard 420001 for pavement joint details not shown.

See Standard 610001 for shoulder inlet with curb when required.

See plans for details of bridge approach slab, approach footing and joint treatment.

All dimensions are in inches unless otherwise shown.

MODEL: Plan 1
FILE NAME: D36863-StrDetail-04.dgn

TranSmart
411 South Wells Street Suite 1000
Chicago, Illinois 60607

USER NAME = nsallehlan	DESIGNED - NS	REVISED -	
	DRAWN - NS	REVISED -	
PLOT SCALE = 0.16666633 ' / In.	CHECKED - TW	REVISED -	
PLOT DATE = 3/29/2021	DATE - 2021/03/26	REVISED -	

STATE OF ILLINOIS
DEPARTMENT OF TRANSPORTATION

PAVEMENT CONNECTOR (PCC)
FOR BRIDGE APPROACH SLAB

SCALE: NTS | SHEET 2 OF 2 SHEETS | STA. | TO STA.

F.A.I. RTE.	SECTION	COUNTY	TOTAL SHEETS	SHEET NO.
57	139 HBR-6	KANKAKEE	202	170
		CONTRACT NO. 66997		
	ILLINOIS	FED. AID PROJECT		

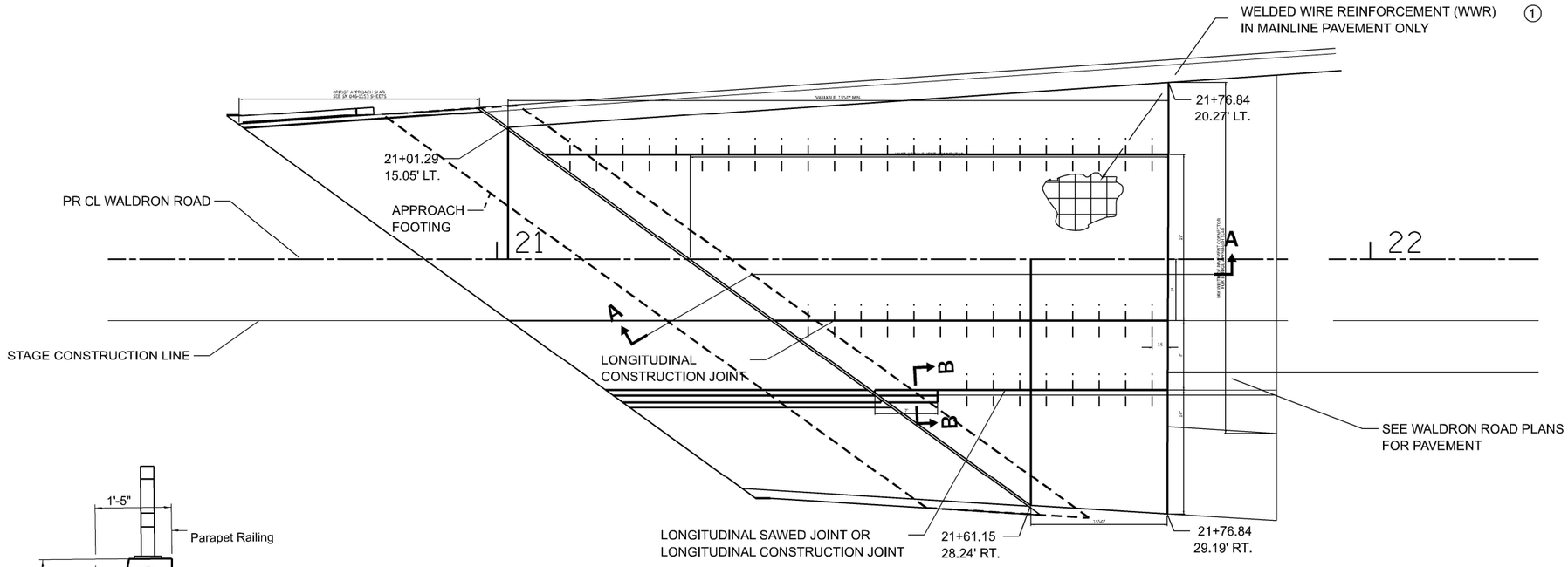

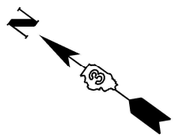

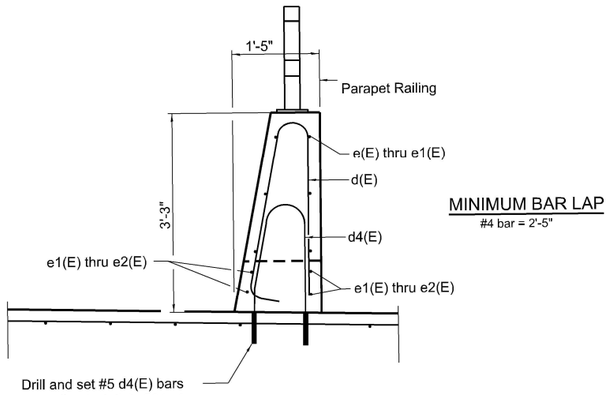

MINIMUM BAR LAP
#4 bar = 2'-5"

Drill and set #5 d4(E) bars according to Article 584 of the Standard Specifications. Drilled holes shall be roughed or scored per Manufactorer's recommendations. Maximum depth of hole shall not exceed 6". Contractor shall take all necessary precautions to prevent drilled hole interference with welded wire reinforcement.

PLAN
SOUTH PAVEMENT CONNECTOR

STA. 21+22 TO STA 21+75

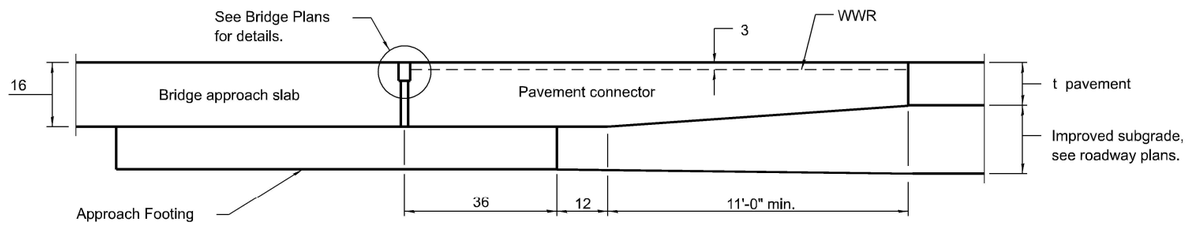

SECTION B-B

SECTION A-A

① WWR shall be 0.11 sq. in./ft. in both directions. Maximum wire spacing shall be 6 . Minimum lap distance shall be two cross wires.

GENERAL NOTES

THICKNESS-"t"=Thickness of Pavement.

Concrete barrier, reinforcement bars and parapet railing will be included in the cost of PAVEMENT CONNECTOR FOR BRIDGE APPROACH SLAB.

See Standard 420001 for pavement joint details not shown.

See Standard 610001 for shoulder inlet with curb when required.

See plans for details of bridge approach slab, approach footing and joint treatment.

All dimensions are in inches unless otherwise shown.

MODEL: Plan 1
FILE NAME: D366997-Std-Detail-04.dgn

TranSmart
411 South Wells Street Suite 1000
Chicago, Illinois 60607

USER NAME = nsallehlan	DESIGNED - NS	REVISED - 5/5/2021	
	DRAWN - NS	REVISED -	
PLOT SCALE = 0.16666633 ' / In.	CHECKED - TW	REVISED -	
PLOT DATE = 3/29/2021	DATE - 2021/03/26	REVISED -	

STATE OF ILLINOIS
DEPARTMENT OF TRANSPORTATION

PAVEMENT CONNECTOR (PCC)
FOR BRIDGE APPROACH SLAB

SCALE: NTS | SHEET 2 OF 2 SHEETS | STA. | TO STA.

F.A.I. RTE.	SECTION	COUNTY	TOTAL SHEETS	SHEET NO.
57	139 HBR-6	KANKAKEE	202	170A
		CONTRACT NO. 66997		
	ILLINOIS	FED. AID PROJECT		

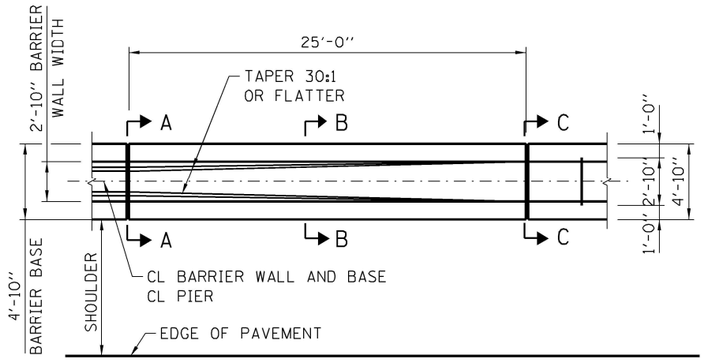

PLAN

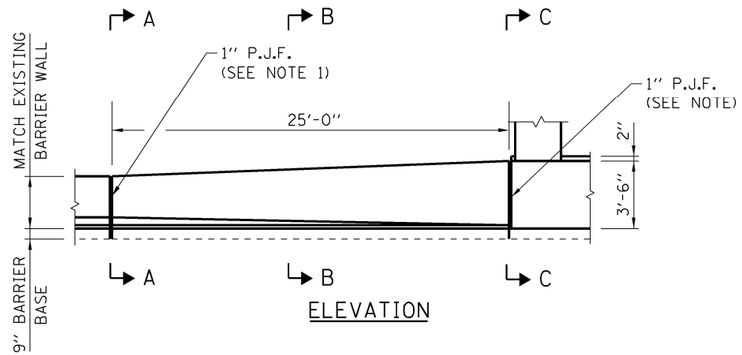

ELEVATION

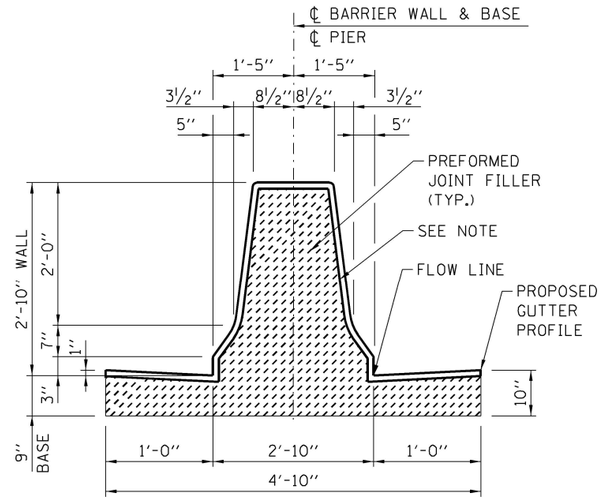

SECTION A-A

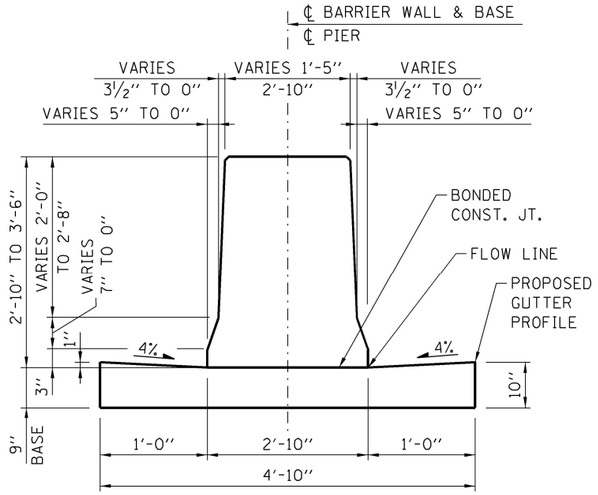

SECTION B-B

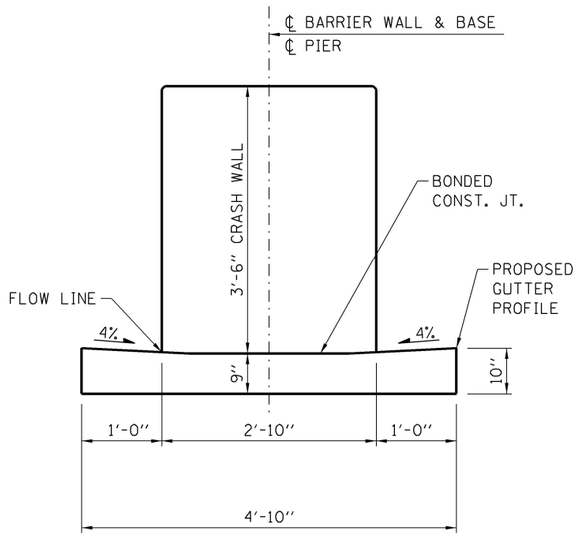

SECTION C-C

NOTE:

1. NON-STAINING GRAY ONE COMPONENT NON-SAG ELASTOMERIC GUN GRADE POLYURETHANE SEALANT MEETING THE REQUIREMENTS OF ASTM C-920, TYPE S, GRADE NS, CLASS 25, USE T WITH A BACKER ROD.

2. COST OF MATERIAL AND INSTALLATION OF PERFORMED JOINT FILLER TO BE INCLUDED IN CONCRETE BARRIER TRANSITION.

CONCRETE BARRIER TRANSITION

MODEL: Plan 1
FILE NAME: D306997-SH-Detail-04A.dgn

TranSmart
411 South Wells Street Suite 1000
Chicago, Illinois 60607

USER NAME = nsalehian	DESIGNED - NS	REVISED - 5/5/2021	
	DRAWN - NS	REVISED -	
PLOT SCALE = 0.16666633 ' / In.	CHECKED - TW	REVISED -	
PLOT DATE = 3/29/2021	DATE - 2021/03/26	REVISED -	

STATE OF ILLINOIS
DEPARTMENT OF TRANSPORTATION

CONCRETE BARRIER TRANSITION AT BRIDGE PIERS

SCALE: NTS | SHEET 1 OF 1 SHEETS | STA. | TO STA.

F.A.I. RTE.	SECTION	COUNTY	TOTAL SHEETS	SHEET NO.
57	139 HBR-6	KANKAKEE	202	170B
		CONTRACT NO. 66997		
	ILLINOIS	FED. AID PROJECT		

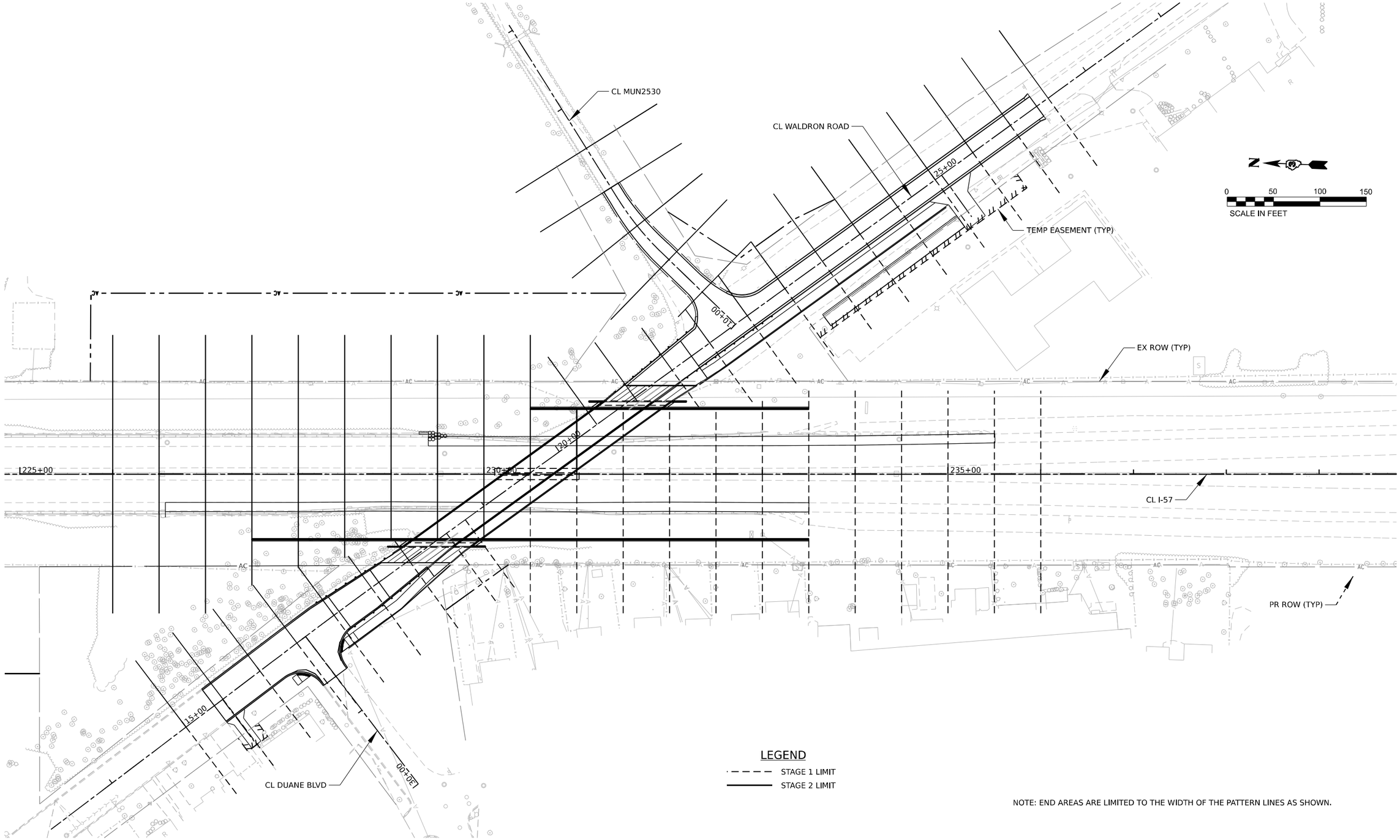

LEGEND

STAGE 1 LIMIT

STAGE 2 LIMIT

NOTE: END AREAS ARE LIMITED TO THE WIDTH OF THE PATTERN LINES AS SHOWN.

MODEL: Plan 1
FILE NAME: D386863-Sht-Pattern.dgn

USER NAME = nsallehian	DESIGNED - BJD	REVISED -	
	DRAWN - BJD	REVISED -	
PLOT SCALE = 0.16666633 ' / In.	CHECKED - TW	REVISED -	
PLOT DATE = 3/29/2021	DATE -	REVISED -	

STATE OF ILLINOIS
DEPARTMENT OF TRANSPORTATION

I-57 & WALDRON ROAD
CROSS SECTION PATTERNS

SCALE: 1" = 50' | SHEET 1 OF 1 SHEETS | STA. | TO STA.

F.A.I. RTE.	SECTION	COUNTY	TOTAL SHEETS	SHEET NO.
57	139 HBR-6	KANKAKEE	202	171
		CONTRACT NO. 66997		
	ILLINOIS	FED. AID PROJECT		

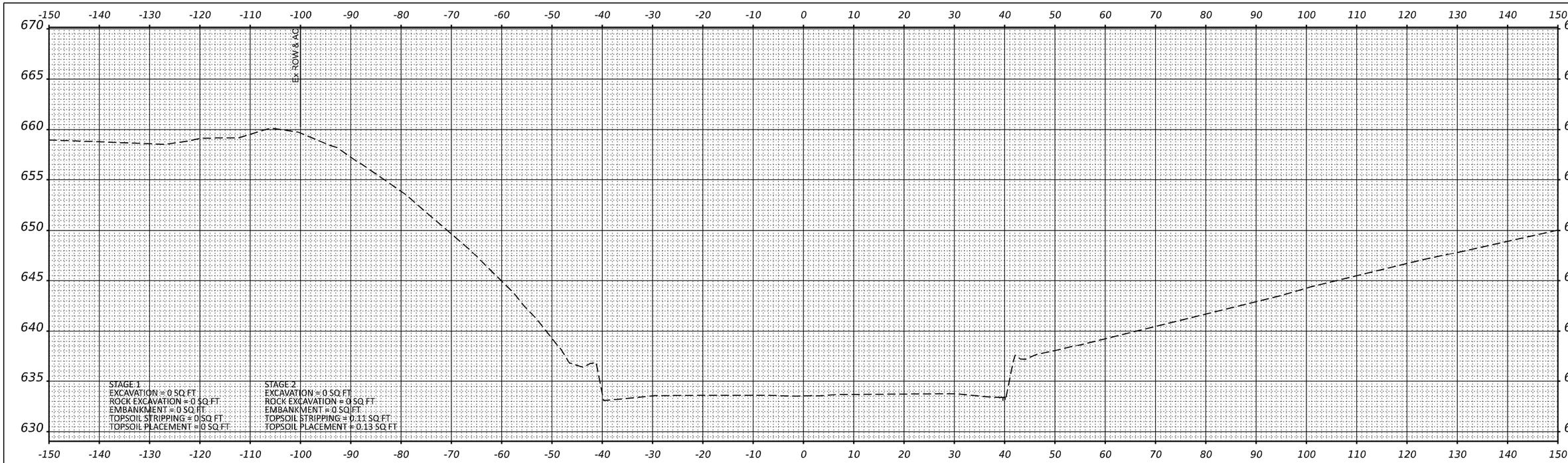

STA 226+50.00

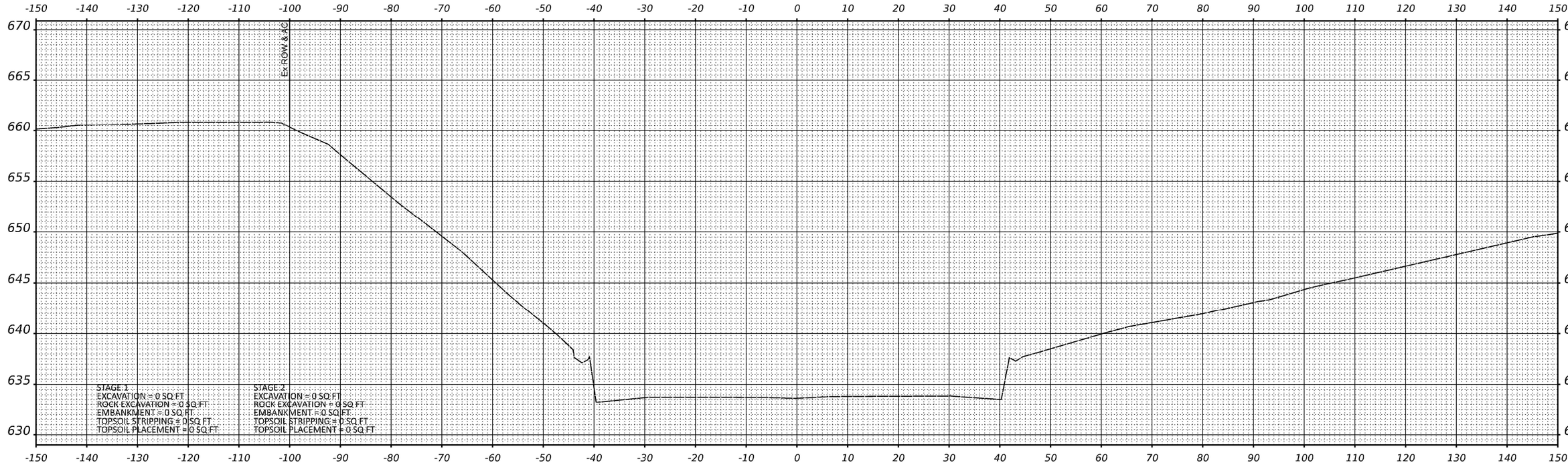

STA 226+00.00

MODEL: PR_57_XS-1
FILE NAME: PR_57_XS-1.dgn

TranSmart
411 South Wells Street Suite 1000
Chicago, Illinois 60607

USER NAME = nsallehlan	DESIGNED - BJD	REVISED -
	DRAWN - BJD	REVISED -
PLOT SCALE = 0.16666633 ' / In.	CHECKED - TW	REVISED -
PLOT DATE = 3/29/2021	DATE - 2021/03/26	REVISED -

STATE OF ILLINOIS
DEPARTMENT OF TRANSPORTATION

INTERSTATE 57
CROSS SECTIONS

SCALE: 1" = 10' | SHEET 1 OF 13 SHEETS | STA. 226+00 | TO STA. 226+50

F.A.I. RTE.	SECTION	COUNTY	TOTAL SHEETS	SHEET NO.
57	139 HBR-6	KANKAKEE	202	172
		CONTRACT NO. 66997		
	ILLINOIS	FED. AID PROJECT		

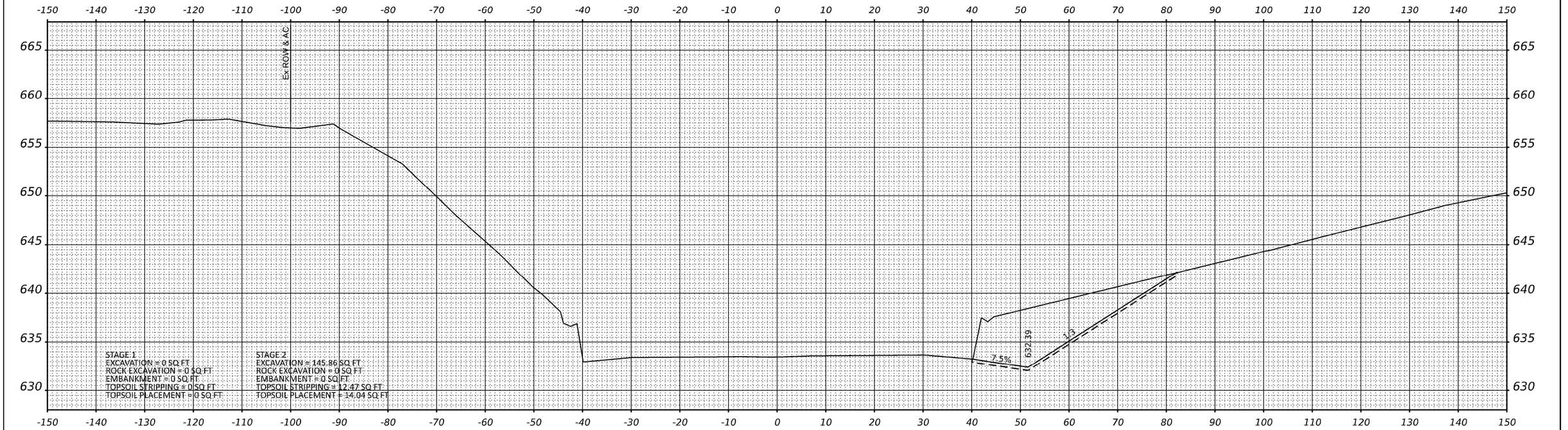

STA 227+00.00

MODEL: PR_57_XS-3
FILE NAME: PR_57_XS-3.dgn

TranSmart
411 South Wells Street Suite 1000
Chicago, Illinois 60607

USER NAME = nsallehian	DESIGNED - BJD	REVISED -
	DRAWN - BJD	REVISED -
PLOT SCALE = 0.16666633 ' / In.	CHECKED - TW	REVISED -
PLOT DATE = 3/29/2021	DATE - 2021/03/26	REVISED -

STATE OF ILLINOIS
DEPARTMENT OF TRANSPORTATION

INTERSTATE 57
CROSS SECTIONS

SCALE: 1" = 10' | SHEET 2 OF 13 SHEETS | STA. 227+00 | TO STA. 227+00

F.A.I. RTE.	SECTION	COUNTY	TOTAL SHEETS	SHEET NO.
57	139 HBR-6	KANKAKEE	202	173
		CONTRACT NO. 66997		
	ILLINOIS	FED. AID PROJECT		

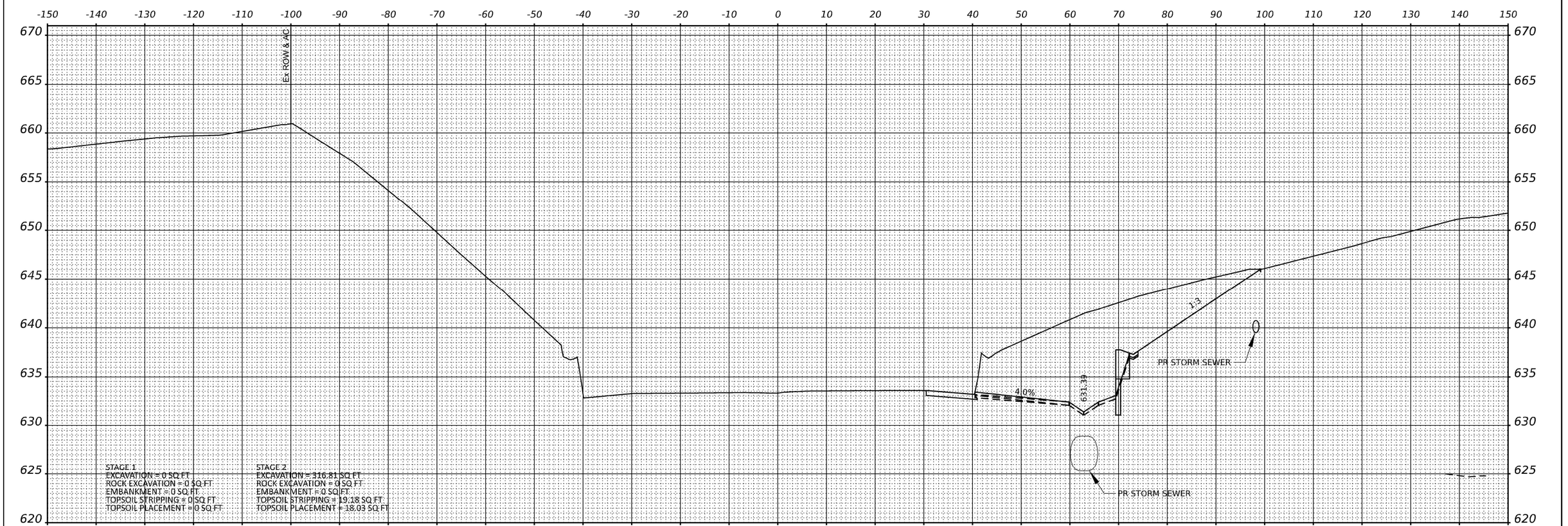

STA 227+50.00

MODEL: PR_57_XS-4
FILE NAME: PR_57_XS-4.dgn

TranSmart
411 South Wells Street Suite 1000
Chicago, Illinois 60607

USER NAME = nsallehan	DESIGNED - BJD	REVISED -
	DRAWN - BJD	REVISED -
PLOT SCALE = 0.16666633 ' / In.	CHECKED - TW	REVISED -
PLOT DATE = 3/29/2021	DATE - 2021/03/26	REVISED -

STATE OF ILLINOIS
DEPARTMENT OF TRANSPORTATION

INTERSTATE 57
CROSS SECTIONS

SCALE: 1" = 10' | SHEET 3 OF 13 SHEETS | STA. 227+50 | TO STA. 227+50

F.A.I. RTE.	SECTION	COUNTY	TOTAL SHEETS	SHEET NO.
57	139 HBR-6	KANKAKEE	202	174
		CONTRACT NO. 66997		
	ILLINOIS	FED. AID PROJECT		

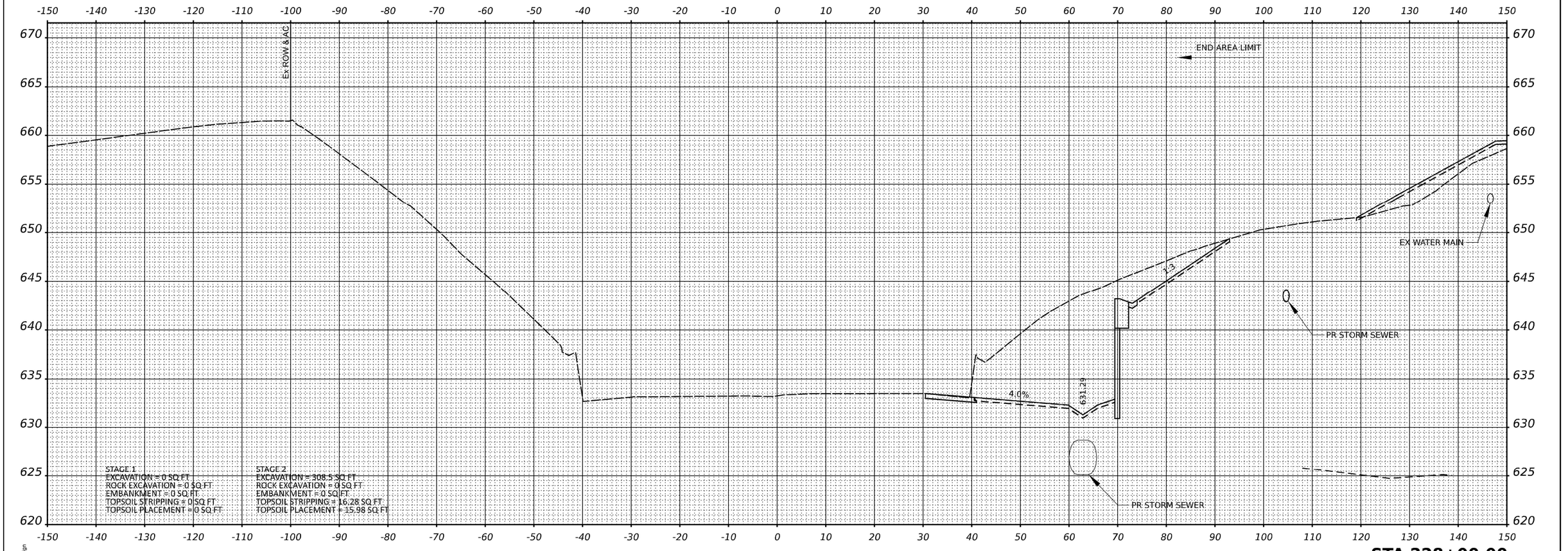

STA 228+00.00

MODEL: PR_57_XS-6
FILE NAME: PR_57_XS-6.dgn

TranSmart
411 South Wells Street Suite 1000
Chicago, Illinois 60607

USER NAME = nsallehan	DESIGNED - BJD	REVISED -
	DRAWN - BJD	REVISED -
PLOT SCALE = 0.16666633 ' / In.	CHECKED - TW	REVISED -
PLOT DATE = 3/29/2021	DATE - 2021/03/26	REVISED -

STATE OF ILLINOIS
DEPARTMENT OF TRANSPORTATION

INTERSTATE 57
CROSS SECTIONS

SCALE: 1" = 10' | SHEET 4 OF 13 SHEETS | STA. 228+00 | TO STA. 228+00

F.A.I. RTE.	SECTION	COUNTY	TOTAL SHEETS	SHEET NO.
57	139 HBR-6	KANKAKEE	202	175
		CONTRACT NO. 66997		
	ILLINOIS FED. AID PROJECT			

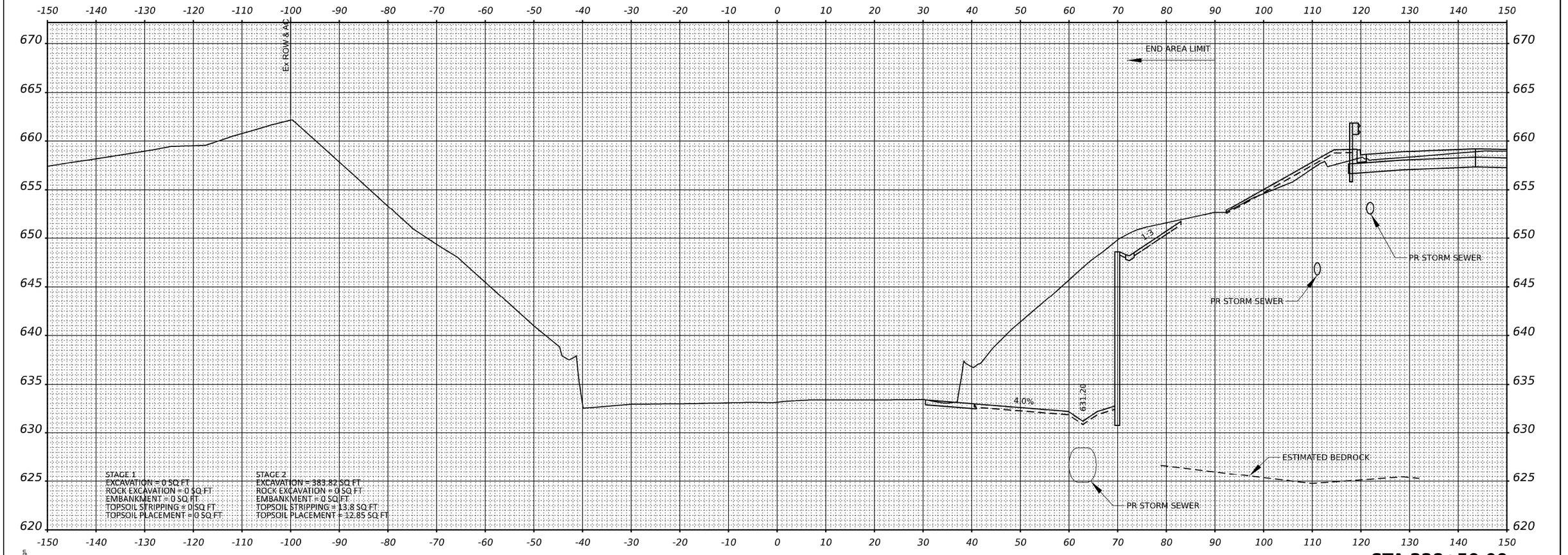

STA 228+50.00

MODEL: PR_57_XS-6
FILE NAME: PR_57_XS-6.dgn

TranSmart
411 South Wells Street Suite 1000
Chicago, Illinois 60607

USER NAME = nsallehan	DESIGNED - BJD	REVISED -
	DRAWN - BJD	REVISED -
PLOT SCALE = 0.16666633 ' / In.	CHECKED - TW	REVISED -
PLOT DATE = 3/29/2021	DATE - 2021/03/26	REVISED -

STATE OF ILLINOIS
DEPARTMENT OF TRANSPORTATION

INTERSTATE 57
CROSS SECTIONS

SCALE: 1" = 10' | SHEET 5 OF 13 SHEETS | STA. 228+50 | TO STA. 228+50

F.A.I. RTE.	SECTION	COUNTY	TOTAL SHEETS	SHEET NO.
57	139 HBR-6	KANKAKEE	202	176
		CONTRACT NO. 66997		
	ILLINOIS FED. AID PROJECT			

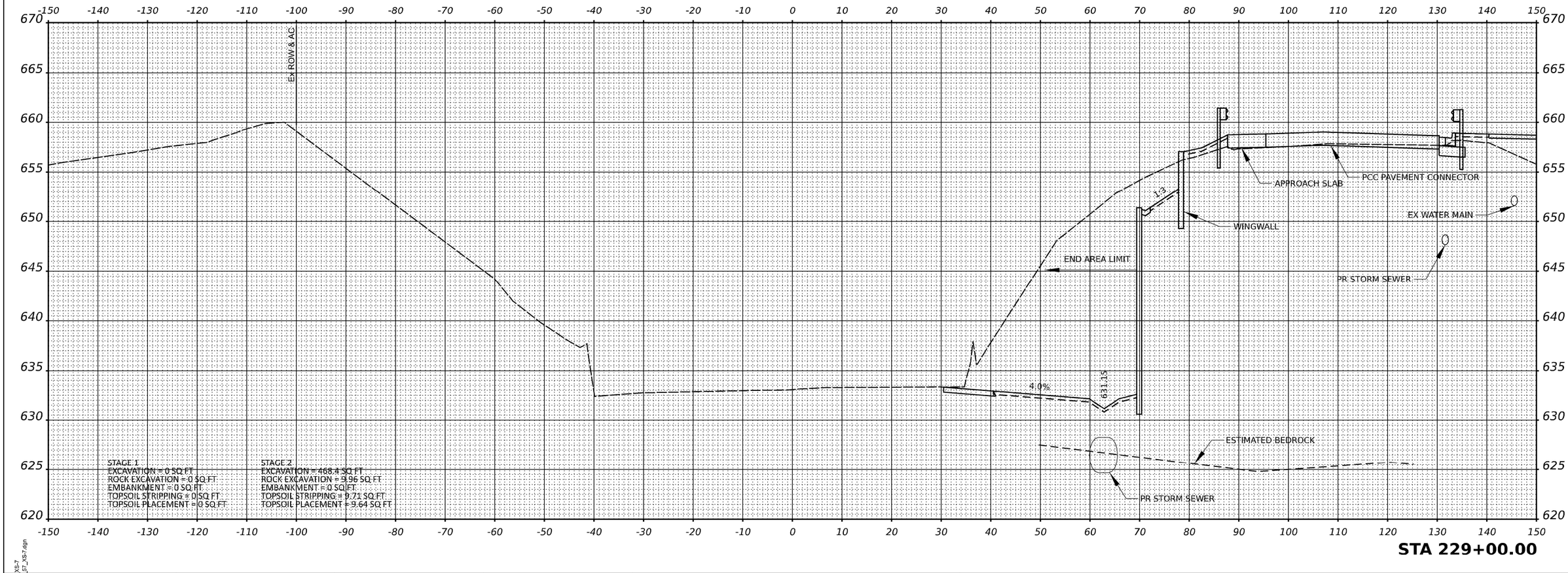

STA 229+00.00

MODEL: PR_57_XS-7
FILE NAME: PR_57_XS-7.dgn

TranSmart
411 South Wells Street Suite 1000
Chicago, Illinois 60607

USER NAME = nsalehian	DESIGNED - BJD	REVISED -	
	DRAWN - BJD	REVISED -	
PLOT SCALE = 0.16666633 ' / In.	CHECKED - TW	REVISED -	
PLOT DATE = 3/29/2021	DATE - 2021/03/26	REVISED -	

STATE OF ILLINOIS
DEPARTMENT OF TRANSPORTATION

INTERSTATE 57
CROSS SECTIONS

SCALE: 1" = 10' | SHEET 6 OF 13 SHEETS | STA. 229+00 | TO STA. 229+00

F.A.I. RTE.	SECTION	COUNTY	TOTAL SHEETS	SHEET NO.
57	139 HBR-6	KANKAKEE	202	177
		CONTRACT NO. 66997		
	ILLINOIS	FED. AID PROJECT		

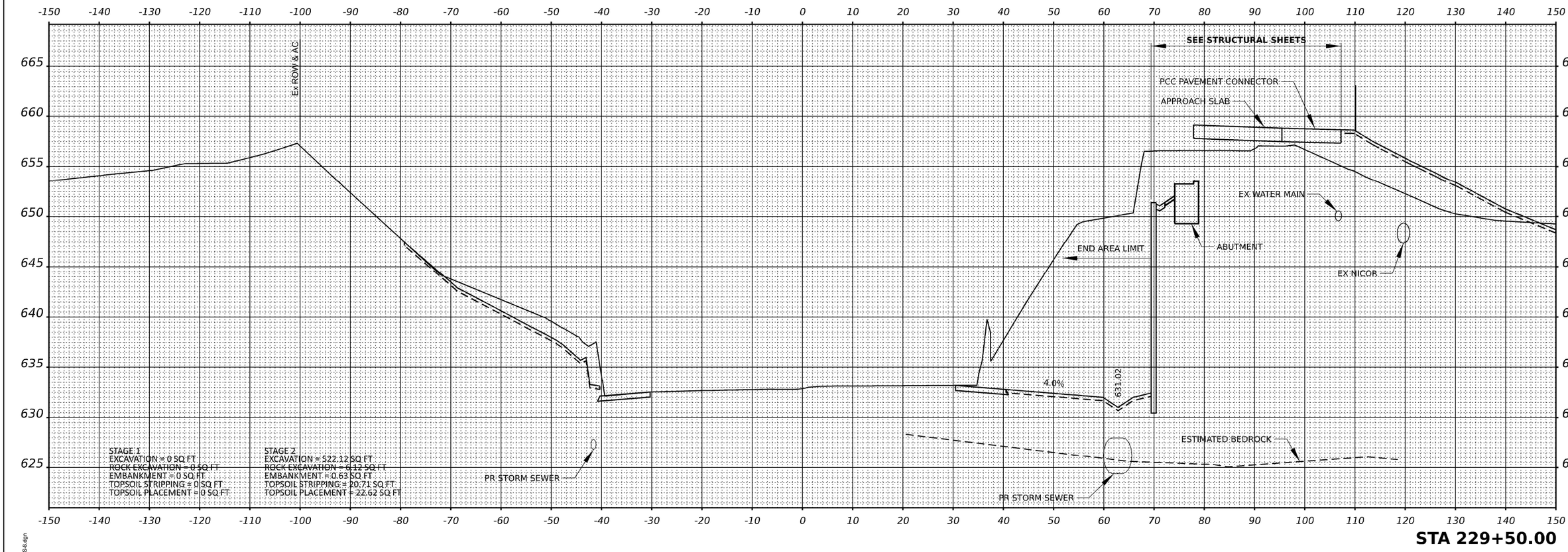

STA 229+50.00

MODEL: PR_57_XS-8
FILE NAME: PR_57_XS-8.dgn

TranSmart
411 South Wells Street Suite 1000
Chicago, Illinois 60607

USER NAME = nsalehian	DESIGNED - BJD	REVISED -
	DRAWN - BJD	REVISED -
PLOT SCALE = 0.16666633 ' / In.	CHECKED - TW	REVISED -
PLOT DATE = 3/29/2021	DATE - 2021/03/26	REVISED -

STATE OF ILLINOIS
DEPARTMENT OF TRANSPORTATION

INTERSTATE 57
CROSS SECTIONS

SCALE: 1" = 10' | SHEET 7 OF 13 SHEETS | STA. 229+50 | TO STA. 229+50

F.A.I. RTE.	SECTION	COUNTY	TOTAL SHEETS	SHEET NO.
57	139 HBR-6	KANKAKEE	202	178
		CONTRACT NO. 66997		
	ILLINOIS	FED. AID PROJECT		

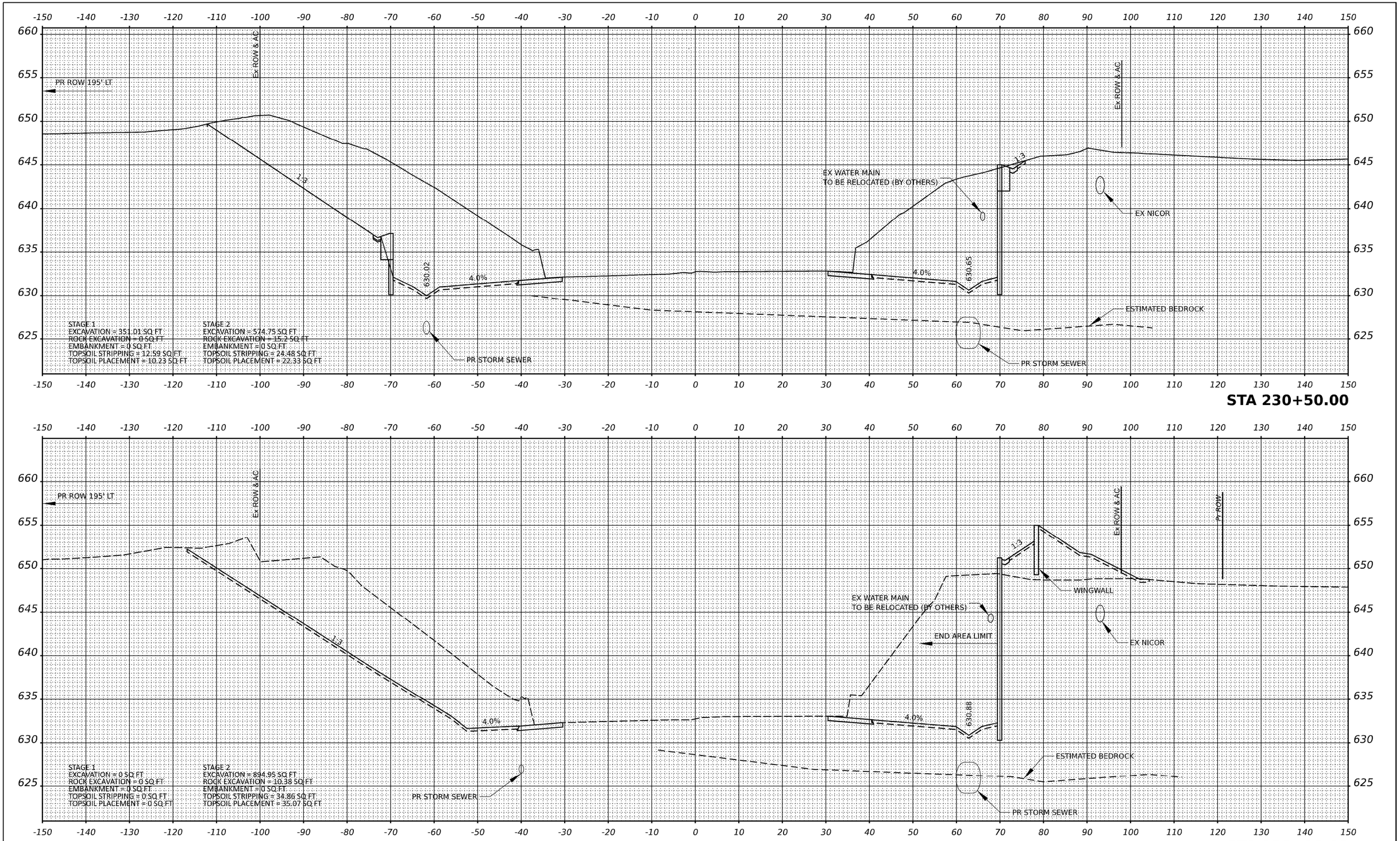

MODEL: PR_57_XS-9
FILE NAME: PR_57_XS-9.dgn

TranSmart
411 South Wells Street Suite 1000
Chicago, Illinois 60607

USER NAME = nsallehan	DESIGNED - BJD	REVISED - 5/7/2021
	DRAWN - BJD	REVISED -
PLOT SCALE = 0.16666633 ' / In.	CHECKED - TW	REVISED -
PLOT DATE = 3/29/2021	DATE - 2021/03/26	REVISED -

STATE OF ILLINOIS
DEPARTMENT OF TRANSPORTATION

INTERSTATE 57
CROSS SECTIONS

SCALE: 1" = 10' | SHEET 8 OF 13 SHEETS | STA. 230+00 | TO STA. 230+50

F.A.I. RTE.	SECTION	COUNTY	TOTAL SHEETS	SHEET NO.
57	139 HBR-6	KANKAKEE	202	179
		CONTRACT NO. 66997		
	ILLINOIS	FED. AID PROJECT		

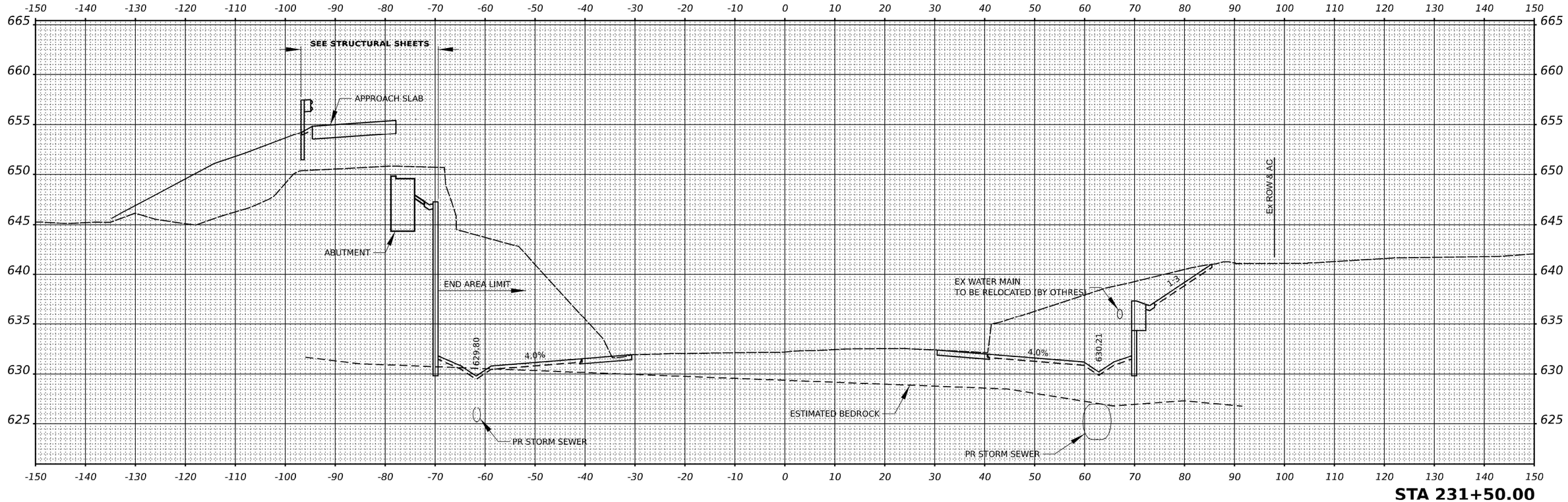

STA 231+50.00

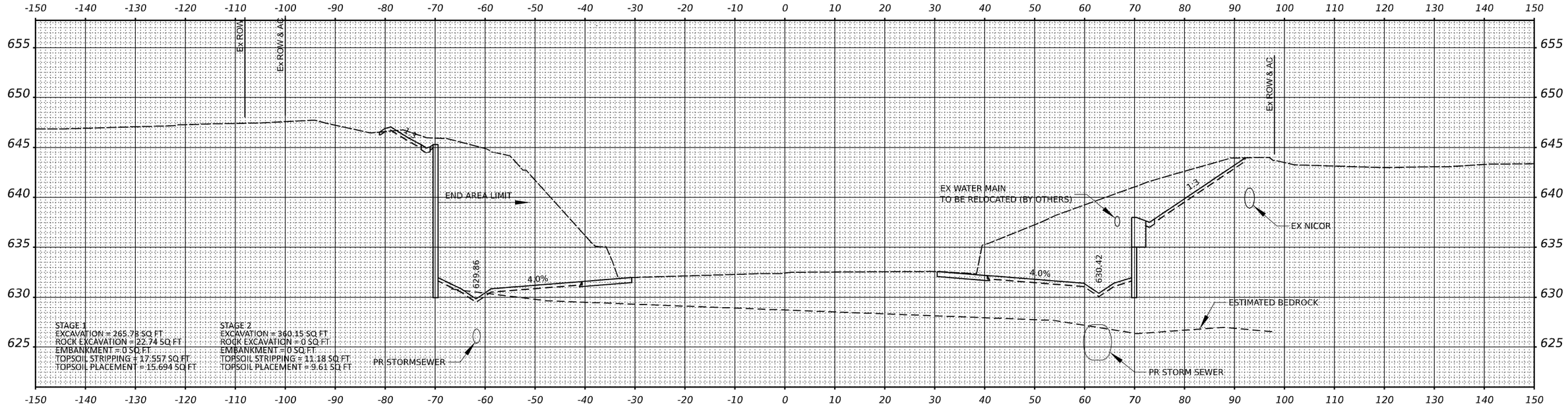

STA 231+00.00

MODEL: PR_57_XS-11
FILE NAME: PR_57_XS-11.dgn

TranSmart
411 South Wells Street Suite 1000
Chicago, Illinois 60607

USER NAME = nsallehlan	DESIGNED - BJD	REVISED - 5/7/2021
	DRAWN - BJD	REVISED -
PLOT SCALE = 0.16666633 ' / In.	CHECKED - TW	REVISED -
PLOT DATE = 3/29/2021	DATE - 2021/03/26	REVISED -

STATE OF ILLINOIS
DEPARTMENT OF TRANSPORTATION

INTERSTATE 57
CROSS SECTIONS

SCALE: 1" = 10' | SHEET 9 OF 13 SHEETS | STA. 231+00 | TO STA. 231+50

F.A.I. RTE.	SECTION	COUNTY	TOTAL SHEETS	SHEET NO.
57	139 HBR-6	KANKAKEE	202	180
		CONTRACT NO. 66997		
	ILLINOIS FED. AID PROJECT			

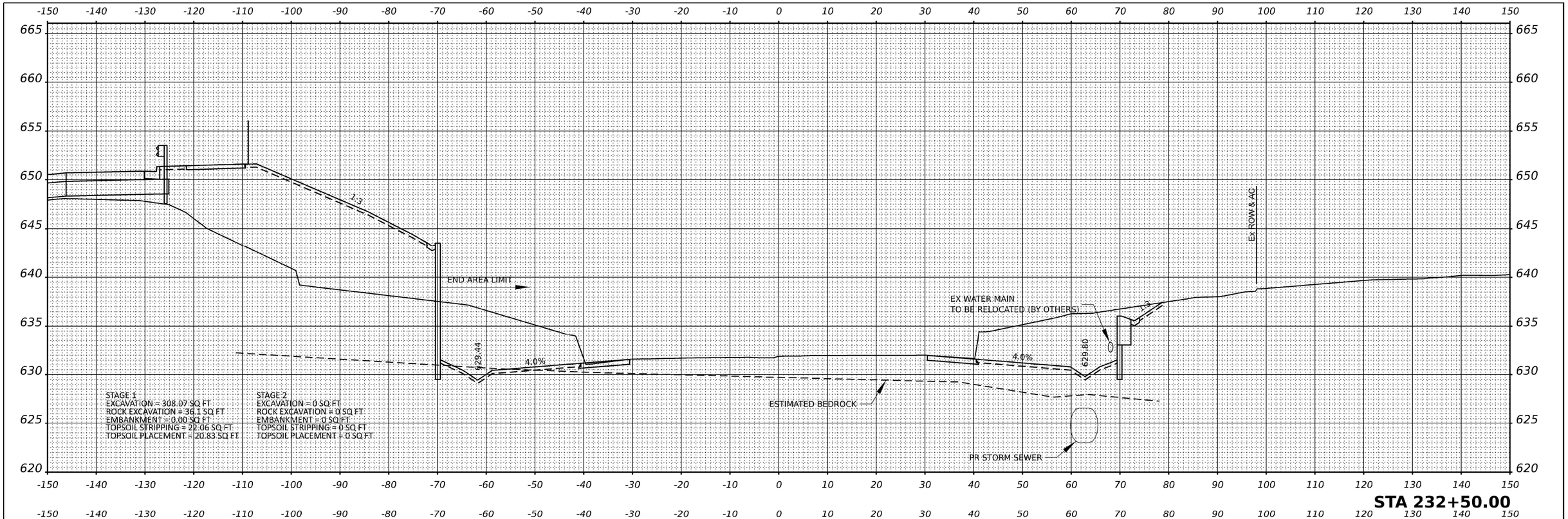

MODEL: PR_57_XS-13
FILE NAME: PR_57_XS-13.dgn

TranSmart
411 South Wells Street Suite 1000
Chicago, Illinois 60607

USER NAME = nsalehian	DESIGNED - BJD	REVISED - 5/7/2021
	DRAWN - BJD	REVISED -
PLOT SCALE = 0.16666633 ' / In.	CHECKED - TW	REVISED -
PLOT DATE = 3/29/2021	DATE - 2021/03/26	REVISED -

STATE OF ILLINOIS
DEPARTMENT OF TRANSPORTATION

INTERSTATE 57
CROSS SECTIONS

SCALE: 1" = 10' | SHEET 10 OF 13 SHEETS | STA. 232+00 | TO STA. 232+50

F.A.I. RTE.	SECTION	COUNTY	TOTAL SHEETS	SHEET NO.
57	139 HBR-6	KANKAKEE	202	181
		CONTRACT NO. 66997		
	ILLINOIS FED. AID PROJECT			

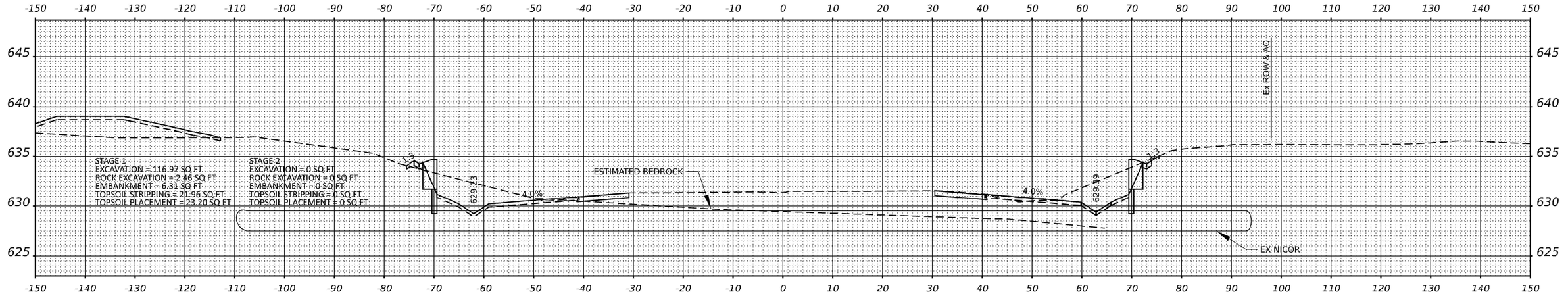

STA 233+50.00

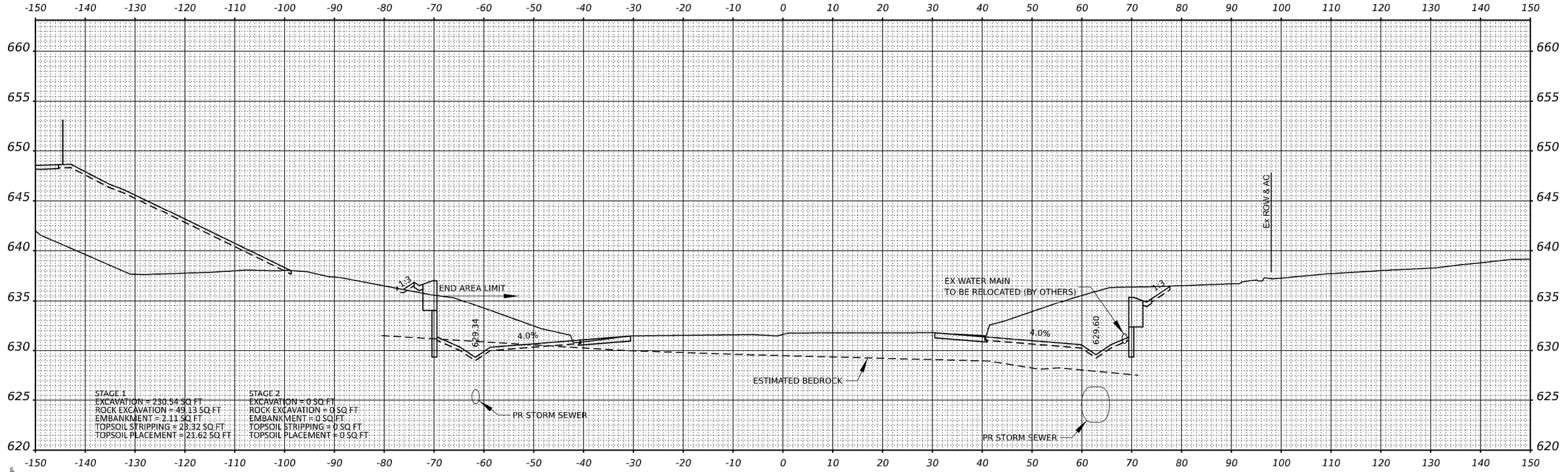

STA 233+00.00

MODEL: PR_57_XS-15
FILE NAME: PR_57_XS-15.dgn

TranSmart
411 South Wells Street Suite 1000
Chicago, Illinois 60607

USER NAME = nsalehian	DESIGNED - BJD	REVISED - 5/7/2021
	DRAWN - BJD	REVISED -
PLOT SCALE = 0.16666633 ' / In.	CHECKED - TW	REVISED -
PLOT DATE = 3/29/2021	DATE - 2021/03/26	REVISED -

STATE OF ILLINOIS
DEPARTMENT OF TRANSPORTATION

INTERSTATE 57
CROSS SECTIONS

SCALE: 1" = 10' | SHEET 11 OF 13 SHEETS | STA. 233+00 | TO STA. 233+50

F.A.I. RTE.	SECTION	COUNTY	TOTAL SHEETS	SHEET NO.
57	139 HBR-6	KANKAKEE	202	182
		CONTRACT NO. 66997		
	ILLINOIS	FED. AID PROJECT		

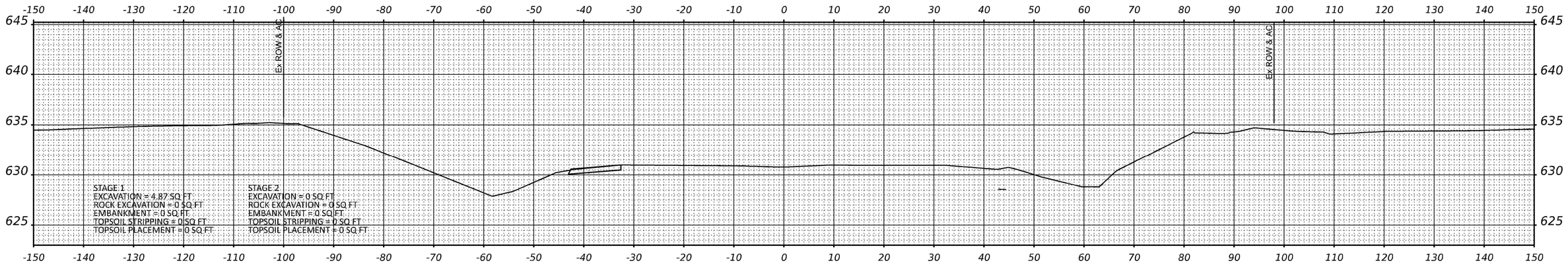

STA 235+00.00

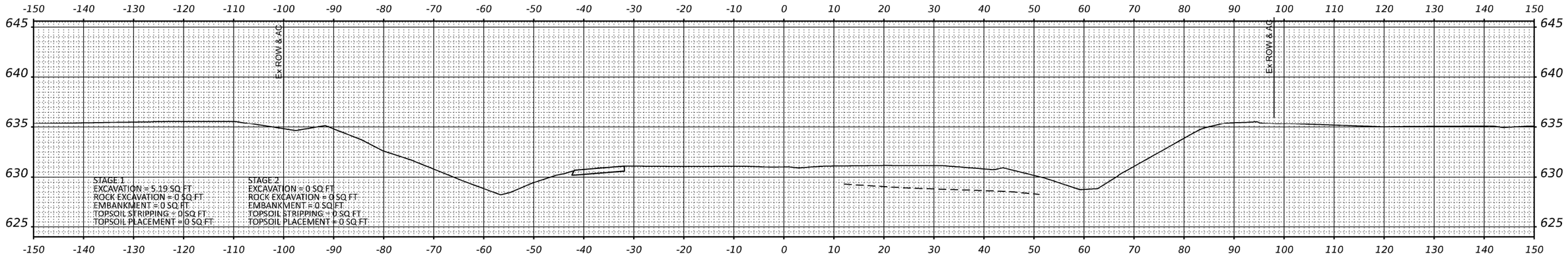

STA 234+50.00

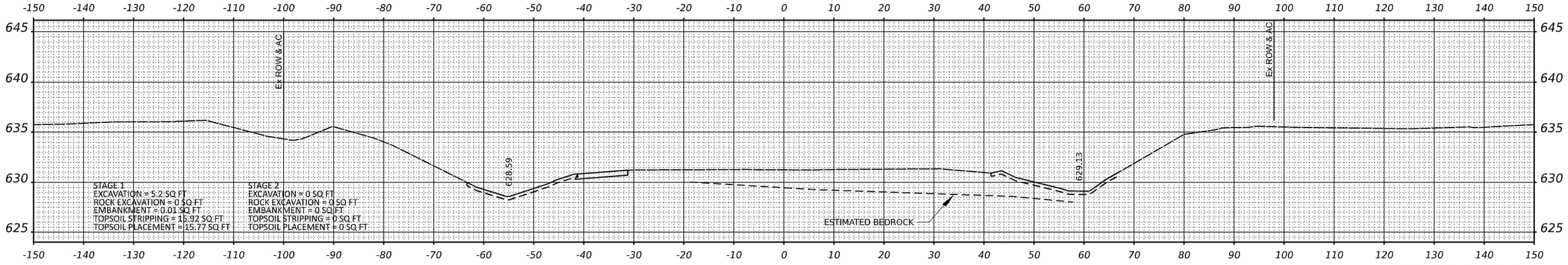

STA 234+00.00

MODEL: PR_57_XS-17
FILE NAME: PR_57_XS-17.dgn

TranSmart
411 South Wells Street Suite 1000
Chicago, Illinois 60607

USER NAME = nsallehan	DESIGNED - BJD	REVISED -
	DRAWN - BJD	REVISED -
PLOT SCALE = 0.16666633 ' / In.	CHECKED - TW	REVISED -
PLOT DATE = 3/29/2021	DATE - 2021/03/26	REVISED -

STATE OF ILLINOIS
DEPARTMENT OF TRANSPORTATION

INTERSTATE 57
CROSS SECTIONS

SCALE: 1" = 10' | SHEET 12 OF 13 SHEETS | STA. 234+00 | TO STA. 235+00

F.A.I. RTE.	SECTION	COUNTY	TOTAL SHEETS	SHEET NO.
57	139 HBR-6	KANKAKEE	202	183
		CONTRACT NO. 66997		
	ILLINOIS FED. AID PROJECT			

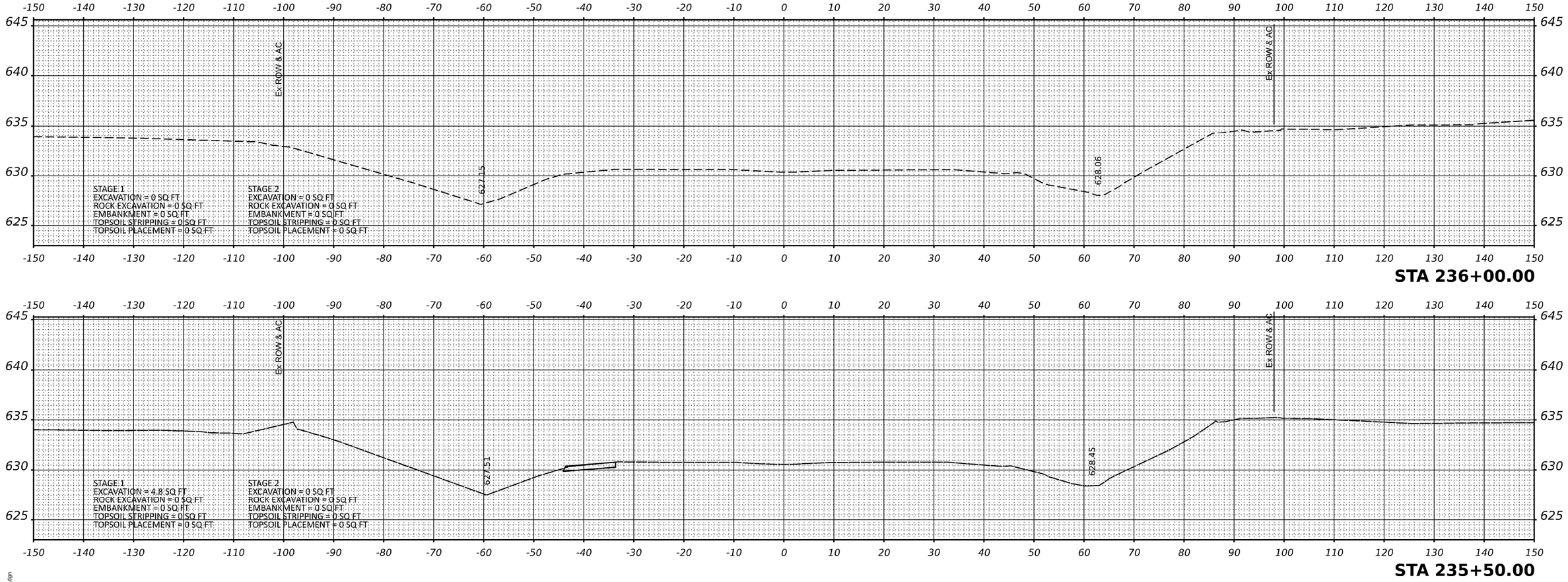

MODEL: PR_57_XS-20
FILE NAME: PR_57_XS-20.dgn

TranSmart
411 South Wells Street Suite 1000
Chicago, Illinois 60607

USER NAME = nsallehlan	DESIGNED - BJD	REVISED -	
	DRAWN - BJD	REVISED -	
PLOT SCALE = 0.16666633 ' / In.	CHECKED - TW	REVISED -	
PLOT DATE = 3/29/2021	DATE - 2021/03/26	REVISED -	

STATE OF ILLINOIS
DEPARTMENT OF TRANSPORTATION

INTERSTATE 57
CROSS SECTIONS

SCALE: 1" = 10' | SHEET 13 OF 13 SHEETS | STA. 235+50 | TO STA. 236+00

F.A.I. RTE.	SECTION	COUNTY	TOTAL SHEETS	SHEET NO.
57	139 HBR-6	KANKAKEE	202	184
		CONTRACT NO. 66997		
	ILLINOIS FED. AID PROJECT			

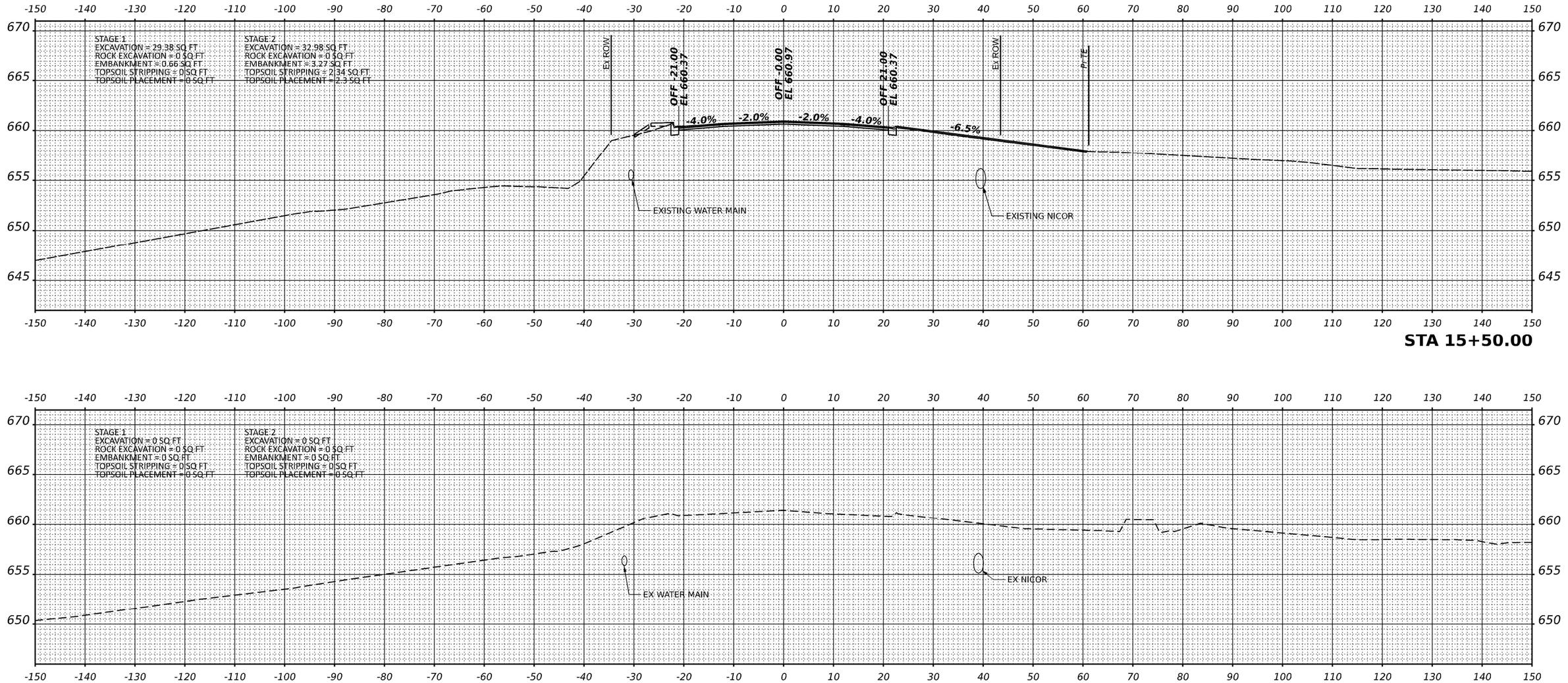

STA 15+50.00

STA 15+00.00

MODEL: 15+00.00
FILE NAME: 15+00.00.dgn

TranSmart
411 South Wells Street Suite 1000
Chicago, Illinois 60607

USER NAME = nsallehan	DESIGNED - NS	REVISED -	
	DRAWN - NS	REVISED -	
PLOT SCALE = 0.16666633 ' / In.	CHECKED - TW	REVISED -	
PLOT DATE = 3/29/2021	DATE - 2021/03/26	REVISED -	

STATE OF ILLINOIS
DEPARTMENT OF TRANSPORTATION

WALDRON ROAD
CROSS SECTIONS

SCALE: | SHEET 1 OF 15 SHEETS | STA. 15+00 | TO STA. 15+50

F.A.I. RTE.	SECTION	COUNTY	TOTAL SHEETS	SHEET NO.
57	139 HBR-6	KANKAKEE	202	185
		CONTRACT NO. 66997		
	ILLINOIS	FED. AID PROJECT		

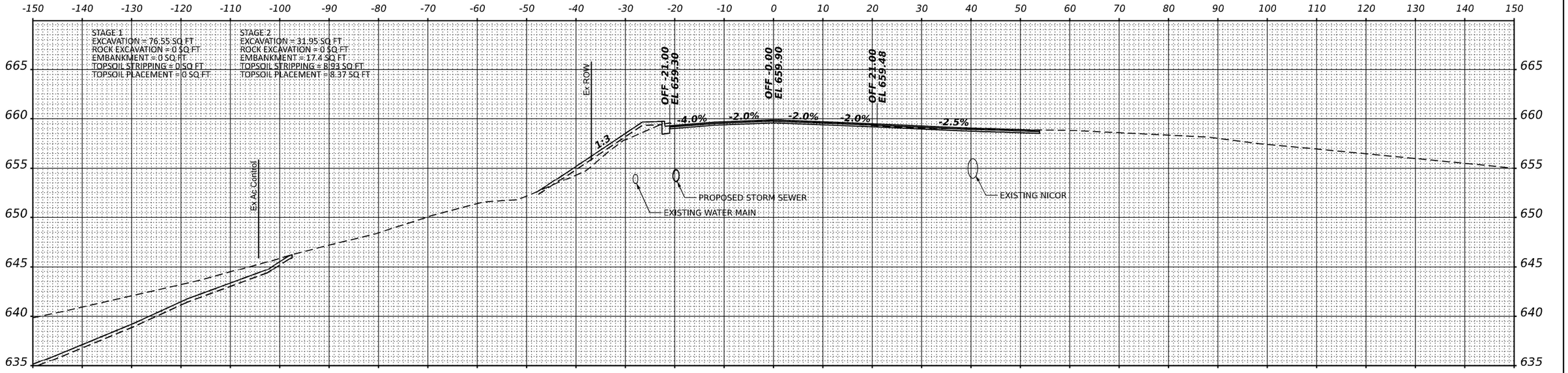

MODEL: 16+00.00
FILE NAME: 16+00.00.dgn

TranSmart
411 South Wells Street Suite 1000
Chicago, Illinois 60607

USER NAME = nsallehlan	DESIGNED - NS	REVISED -	
	DRAWN - NS	REVISED -	
PLOT SCALE = 0.16666633 ' / In.	CHECKED - TW	REVISED -	
PLOT DATE = 3/29/2021	DATE - 2021/03/26	REVISED -	

STATE OF ILLINOIS
DEPARTMENT OF TRANSPORTATION

WALDRON ROAD
CROSS SECTIONS

SCALE: | SHEET 2 OF 15 SHEETS | STA. 16+00 | TO STA. 16+50

F.A.I. RTE.	SECTION	COUNTY	TOTAL SHEETS	SHEET NO.
57	139 HBR-6	KANKAKEE	202	186
		CONTRACT NO. 66997		
	ILLINOIS FED. AID PROJECT			

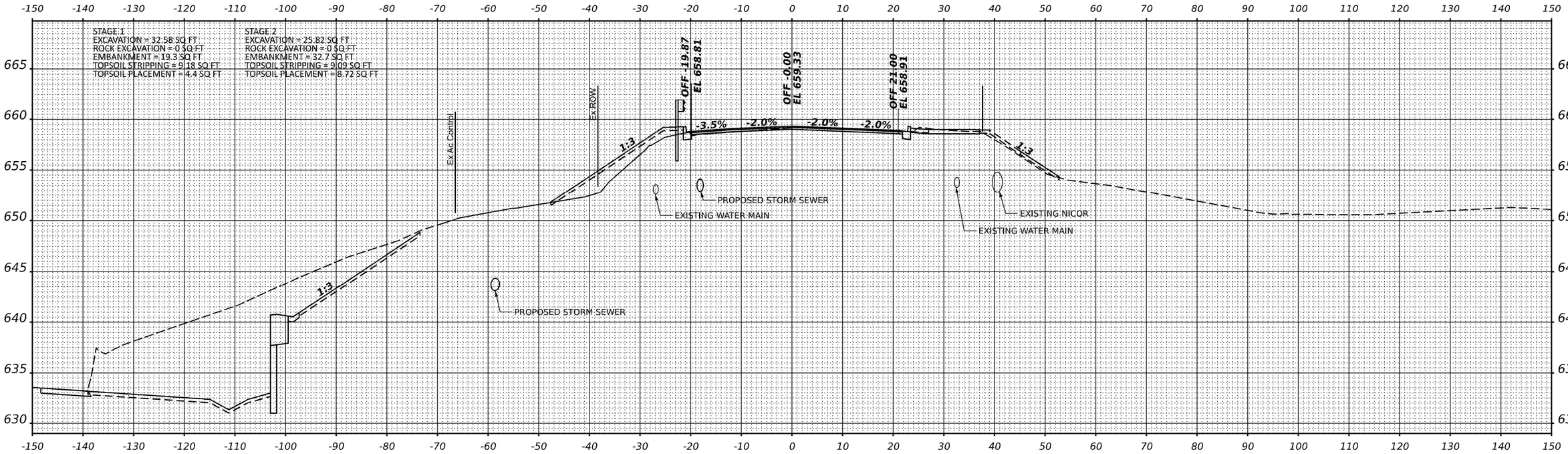

STA 17+00.00

MODEL: 17+00.00
FILE NAME: 17+00.00.dgn

TranSmart
411 South Wells Street Suite 1000
Chicago, Illinois 60607

USER NAME = nsallehan	DESIGNED - NS	REVISED -
	DRAWN - NS	REVISED -
PLOT SCALE = 0.16666633 ' / In.	CHECKED - TW	REVISED -
PLOT DATE = 3/29/2021	DATE - 2021/03/26	REVISED -

STATE OF ILLINOIS
DEPARTMENT OF TRANSPORTATION

WALDRON ROAD
CROSS SECTIONS

SCALE: | SHEET 3 OF 15 SHEETS | STA. 17+00 | TO STA. 17+00

F.A.I. RTE.	SECTION	COUNTY	TOTAL SHEETS	SHEET NO.
57	139 HBR-6	KANKAKEE	202	187
		CONTRACT NO. 66997		
	ILLINOIS FED. AID PROJECT			

STAGE 1
EXCAVATION = 18.4 SQ FT
ROCK EXCAVATION = 0 SQ FT
EMBANKMENT = 101.9 SQ FT
TOPSOIL STRIPPING = 13.88 SQ FT
TOPSOIL PLACEMENT = 11.22 SQ FT

STAGE 2
EXCAVATION = 10.79 SQ FT
ROCK EXCAVATION = 0 SQ FT
EMBANKMENT = 28.48 SQ FT
TOPSOIL STRIPPING = 8.17 SQ FT
TOPSOIL PLACEMENT = 7.95 SQ FT

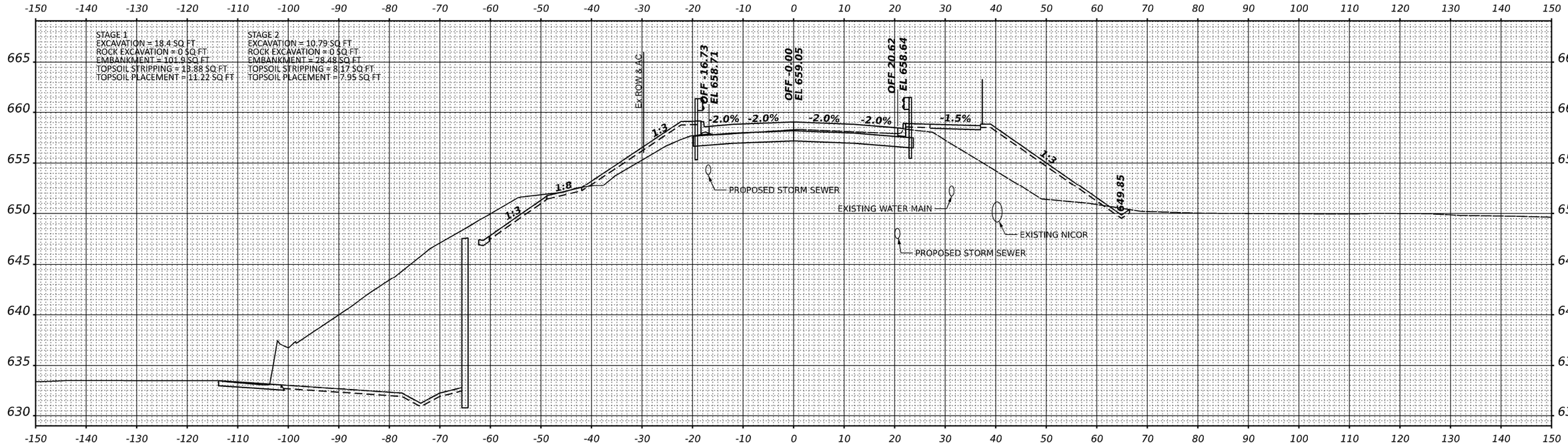

STA 17+50.00

MODEL: 17+50.00
FILE NAME: 17+50.00.dgn

TranSmart
411 South Wells Street Suite 1000
Chicago, Illinois 60607

USER NAME = nsallehlan	DESIGNED - NS	REVISED -
	DRAWN - NS	REVISED -
PLOT SCALE = 0.16666633 ' / In.	CHECKED - TW	REVISED -
PLOT DATE = 3/29/2021	DATE - 2021/03/26	REVISED -

STATE OF ILLINOIS
DEPARTMENT OF TRANSPORTATION

WALDRON ROAD
CROSS SECTIONS

SCALE: | SHEET 4 OF 15 SHEETS | STA. 17+50 | TO STA. 17+50

F.A.I. RTE.	SECTION	COUNTY	TOTAL SHEETS	SHEET NO.
57	139 HBR-6	KANKAKEE	202	188
		CONTRACT NO. 66997		
	ILLINOIS FED. AID PROJECT			

NOTE : SEE STRUCTURAL SHEETS FOR BRIDGE DETAIL

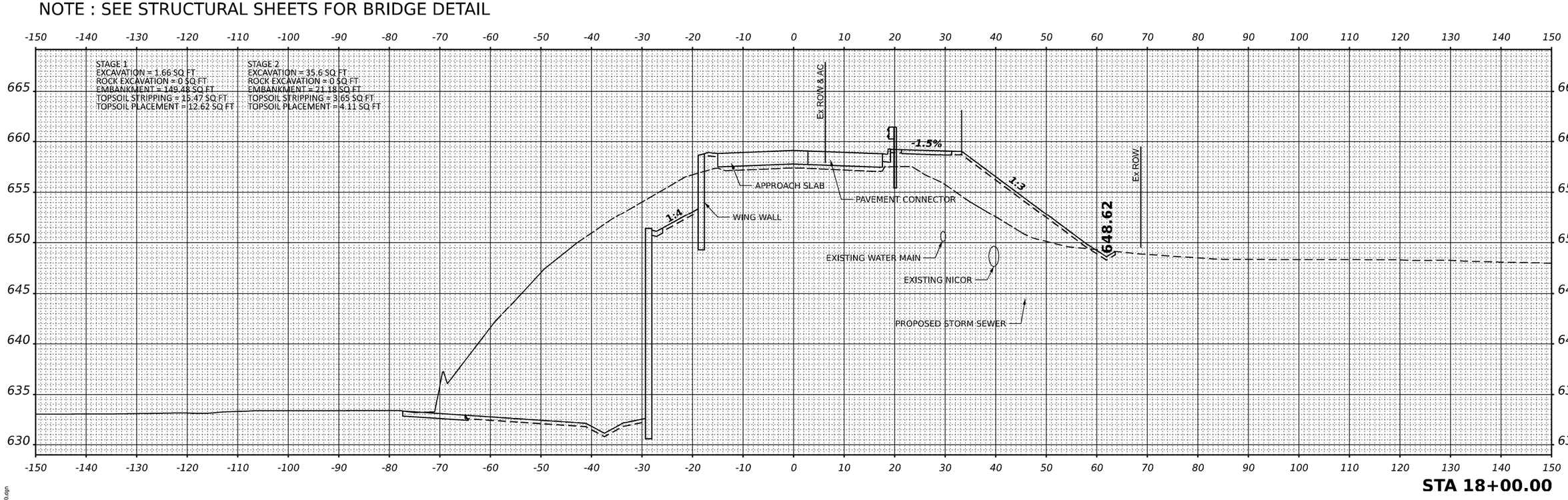

STA 18+00.00

MODEL: 18+00.00
FILE NAME: 18+00.00.dgn

TranSmart
411 South Wells Street Suite 1000
Chicago, Illinois 60607

USER NAME = nsallehan	DESIGNED - NS	REVISED -
	DRAWN - NS	REVISED -
PLOT SCALE = 0.16666633 ' / In.	CHECKED - TW	REVISED -
PLOT DATE = 3/29/2021	DATE - 2021/03/26	REVISED -

STATE OF ILLINOIS
DEPARTMENT OF TRANSPORTATION

WALDRON ROAD
CROSS SECTIONS

SCALE: | SHEET 5 OF 15 SHEETS | STA. 18+00 | TO STA. 18+00

F.A.I. RTE.	SECTION	COUNTY	TOTAL SHEETS	SHEET NO.
57	139 HBR-6	KANKAKEE	202	189
		CONTRACT NO. 66997		
	ILLINOIS FED. AID PROJECT			

NOTE :SECTION THROUGH WALDRON BRIDGE NOT SHOWN.
SEE STRUCTURAL SHEETS FOR BRIDGE DETAIL

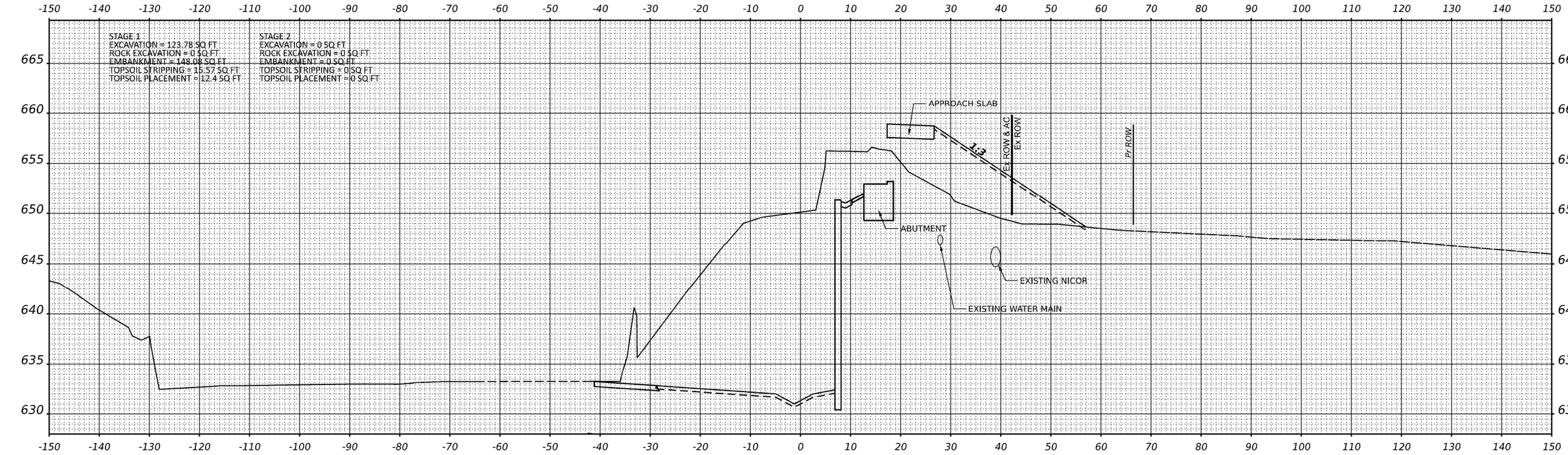

STA 18+50.00

MODEL: 18+50.00
FILE NAME: 18+50.00.dgn

TranSmart
411 South Wells Street Suite 1000
Chicago, Illinois 60607

USER NAME = nsallehlan	DESIGNED - NS	REVISED -	
	DRAWN - NS	REVISED -	
PLOT SCALE = 0.16666633 ' / In.	CHECKED - TW	REVISED -	
PLOT DATE = 3/29/2021	DATE - 2021/03/26	REVISED -	

STATE OF ILLINOIS
DEPARTMENT OF TRANSPORTATION

WALDRON ROAD
CROSS SECTIONS

SCALE: | SHEET 6 OF 15 SHEETS | STA. 18+50 | TO STA. 18+50

F.A.I. RTE.	SECTION	COUNTY	TOTAL SHEETS	SHEET NO.
57	139 HBR-6	KANKAKEE	202	190
		CONTRACT NO. 66997		
	ILLINOIS FED. AID PROJECT			

NOTE :SECTION THROUGH WALDRON BRIDGE NOT SHOWN.
SEE STRUCTURAL SHEETS FOR BRIDGE DETAIL

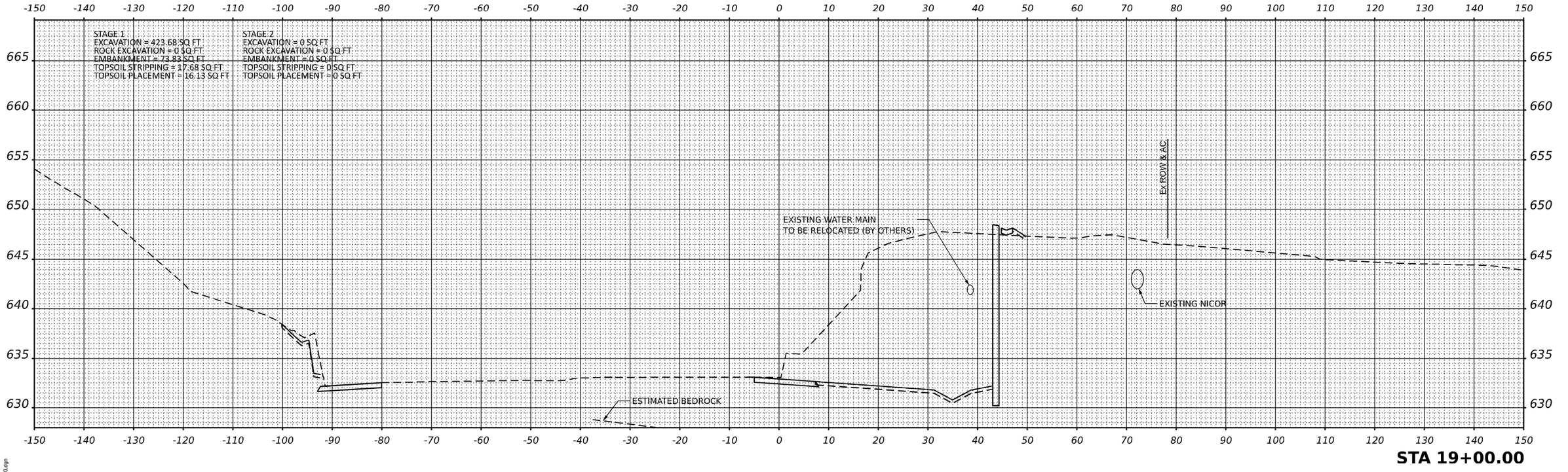

STA 19+00.00

MODEL: 19+00.00
FILE NAME: 19+00.00.dgn

TranSmart
411 South Wells Street Suite 1000
Chicago, Illinois 60607

USER NAME = nsallehan	DESIGNED - NS	REVISED -
	DRAWN - NS	REVISED -
PLOT SCALE = 0.16666633 ' / In.	CHECKED - TW	REVISED -
PLOT DATE = 3/29/2021	DATE - 2021/03/26	REVISED -

STATE OF ILLINOIS
DEPARTMENT OF TRANSPORTATION

WALDRON ROAD
CROSS SECTIONS

SCALE: | SHEET 7 OF 15 SHEETS | STA. 19+00 | TO STA. 19+00

F.A.I. RTE.	SECTION	COUNTY	TOTAL SHEETS	SHEET NO.
57	139 HBR-6	KANKAKEE	202	191
		CONTRACT NO. 66997		
	ILLINOIS	FED. AID PROJECT		

NOTE :SECTION THROUGH WALDRON BRIDGE NOT SHOWN.
SEE STRUCTURAL SHEETS FOR BRIDGE DETAIL

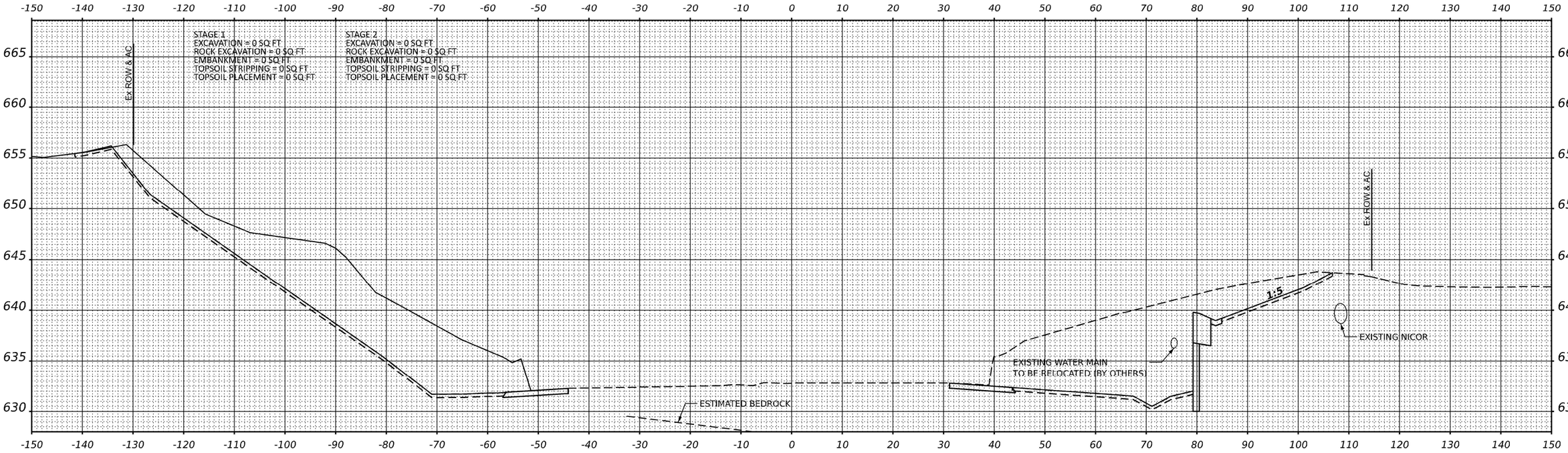

STA 19+50.00

MODEL: 19+50.00
FILE NAME: 19+50.00.dgn

TranSmart
411 South Wells Street Suite 1000
Chicago, Illinois 60607

USER NAME = nsalehian	DESIGNED - NS	REVISED -
	DRAWN - NS	REVISED -
PLOT SCALE = 0.16666633 ' / In.	CHECKED - TW	REVISED -
PLOT DATE = 3/29/2021	DATE - 2021/03/26	REVISED -

STATE OF ILLINOIS
DEPARTMENT OF TRANSPORTATION

WALDRON ROAD
CROSS SECTIONS

SCALE: | SHEET 8 OF 15 SHEETS | STA. 19+50 | TO STA. 19+50

F.A.I. RTE.	SECTION	COUNTY	TOTAL SHEETS	SHEET NO.
57	139 HBR-6	KANKAKEE	202	192
		CONTRACT NO. 66997		
	ILLINOIS	FED. AID PROJECT		

NOTE: SECTION THROUGH WALDRON BRIDGE NOT SHOWN.
SEE STRUCTURAL SHEETS FOR BRIDGE DETAIL

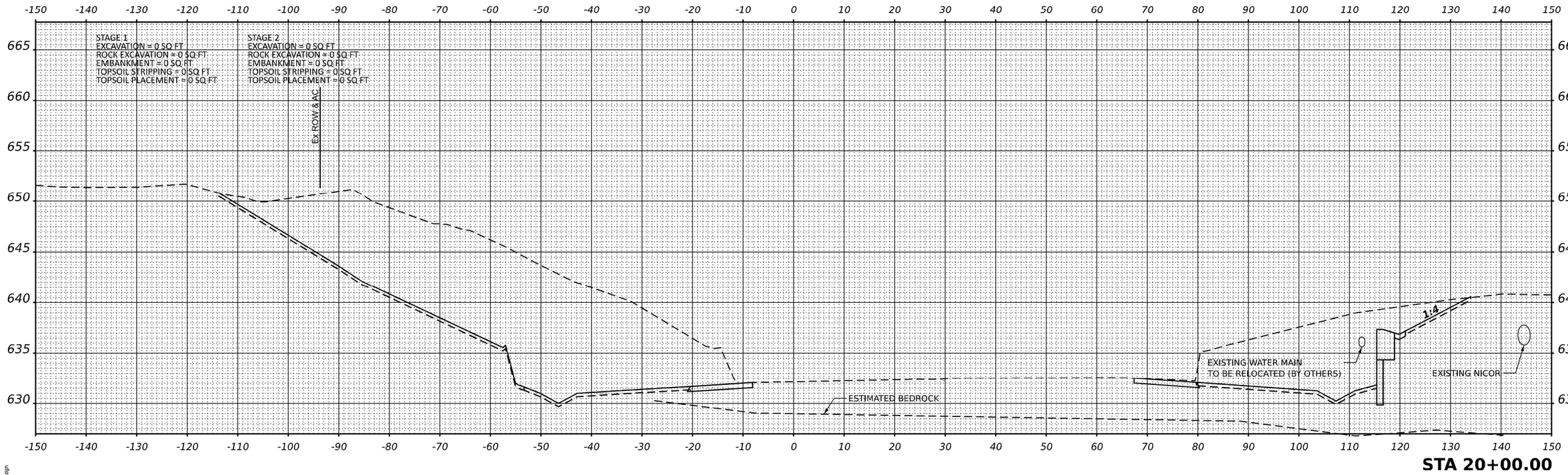

STA 20+00.00

MODEL: 20+00.00
FILE NAME: 20+00.00.dgn

TranSmart
411 South Wells Street Suite 1000
Chicago, Illinois 60607

USER NAME = nsalehian	DESIGNED - NS	REVISED -
	DRAWN - NS	REVISED -
PLOT SCALE = 0.16666633 ' / In.	CHECKED - TW	REVISED -
PLOT DATE = 3/29/2021	DATE - 2021/03/26	REVISED -

STATE OF ILLINOIS
DEPARTMENT OF TRANSPORTATION

WALDRON ROAD
CROSS SECTIONS

SCALE: | SHEET 9 OF 15 SHEETS | STA. 20+00 | TO STA. 20+00

F.A.I. RTE.	SECTION	COUNTY	TOTAL SHEETS	SHEET NO.
57	139 HBR-6	KANKAKEE	202	193
		CONTRACT NO. 66997		
	ILLINOIS	FED. AID PROJECT		

NOTE: SECTION THROUGH WALDRON BRIDGE NOT SHOWN.
SEE STRUCTURAL SHEETS FOR BRIDGE DETAIL

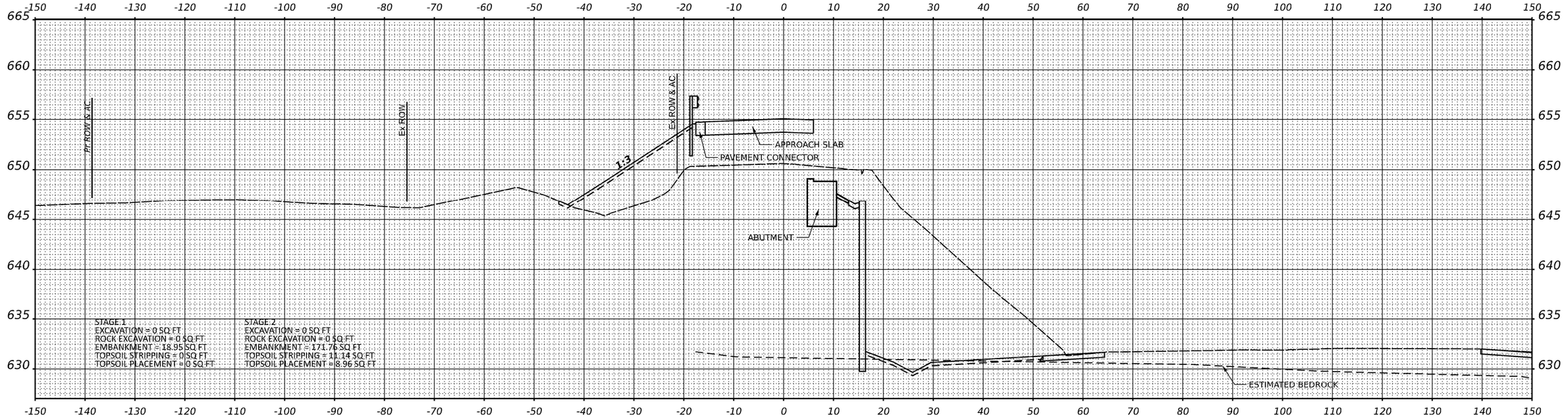

STA 21+00.00

NOTE: SECTION THROUGH WALDRON BRIDGE NOT SHOWN.
SEE STRUCTURAL SHEETS FOR BRIDGE DETAIL

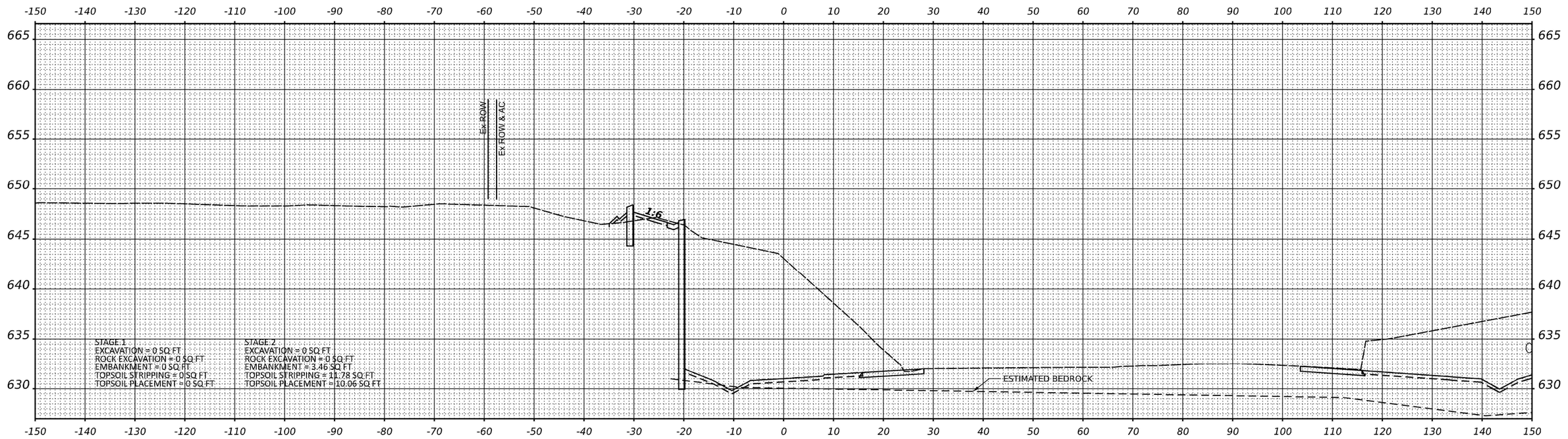

STA 20+50.00

MODEL: 20+50.00
FILE NAME: 20+50.00.dgn

TranSmart
411 South Wells Street Suite 1000
Chicago, Illinois 60607

USER NAME = nsallehan	DESIGNED - NS	REVISED -	
	DRAWN - NS	REVISED -	
PLOT SCALE = 0.16666633 ' / In.	CHECKED - TW	REVISED -	
PLOT DATE = 3/29/2021	DATE - 2021/03/26	REVISED -	

STATE OF ILLINOIS
DEPARTMENT OF TRANSPORTATION

WALDRON ROAD
CROSS SECTIONS

SCALE: | SHEET 10 OF 15 SHEETS | STA. 20+50 | TO STA. 21+00

F.A.I. RTE.	SECTION	COUNTY	TOTAL SHEETS	SHEET NO.
57	139 HBR-6	KANKAKEE	202	194
		CONTRACT NO. 66997		
	ILLINOIS FED. AID PROJECT			

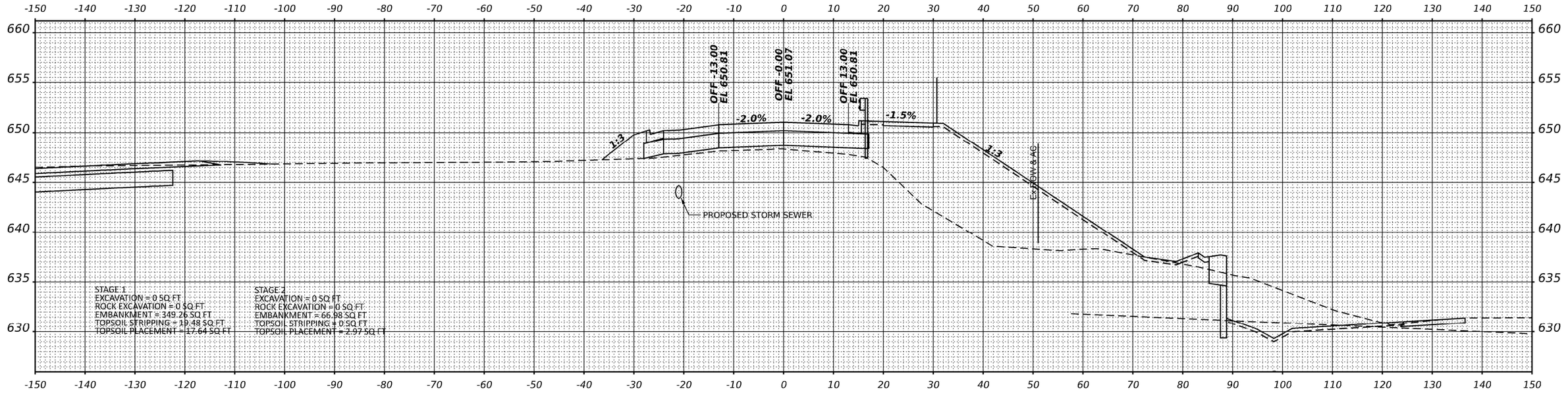

STA 22+00.00

NOTE :SEE STRUCTURAL SHEETS FOR BRIDGE DETAIL

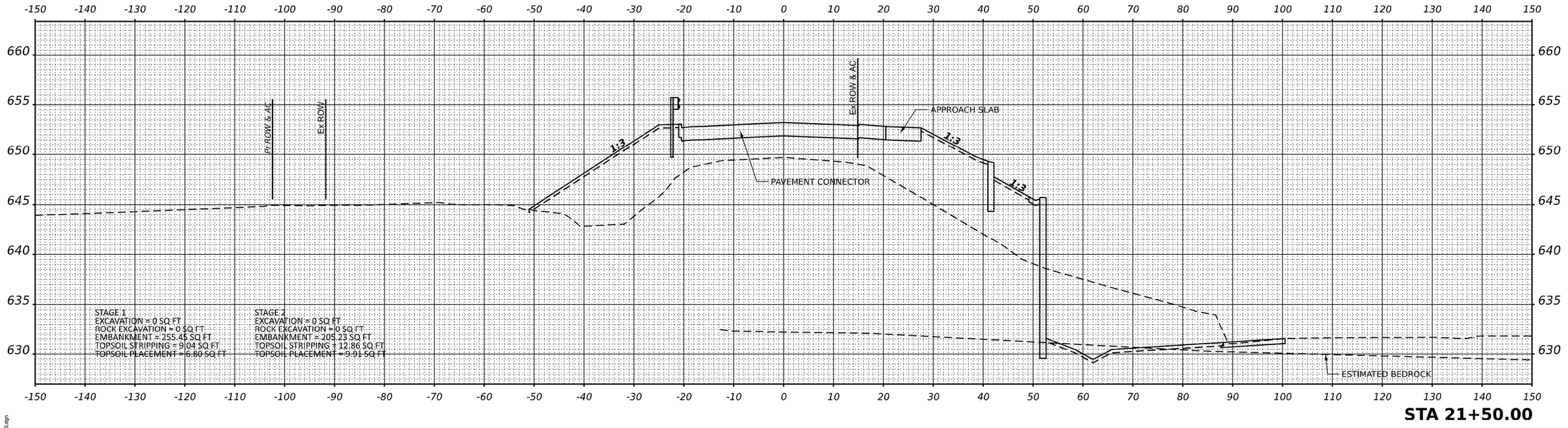

STA 21+50.00

MODEL: 21+50.00
FILE NAME: 21+50.00.dgn

TranSmart
411 South Wells Street Suite 1000
Chicago, Illinois 60607

USER NAME = nsallehlan	DESIGNED - NS	REVISED - 5/7/2021	
	DRAWN - NS	REVISED -	
PLOT SCALE = 0.16666633 ' / In.	CHECKED - TW	REVISED -	
PLOT DATE = 3/29/2021	DATE - 2021/03/26	REVISED -	

STATE OF ILLINOIS
DEPARTMENT OF TRANSPORTATION

WALDRON ROAD
CROSS SECTIONS

SCALE: | SHEET 11 OF 15 SHEETS | STA. 21+50 | TO STA. 22+00

F.A.I. RTE.	SECTION	COUNTY	TOTAL SHEETS	SHEET NO.
57	139 HBR-6	KANKAKEE	202	195
		CONTRACT NO. 66997		
	ILLINOIS FED. AID PROJECT			

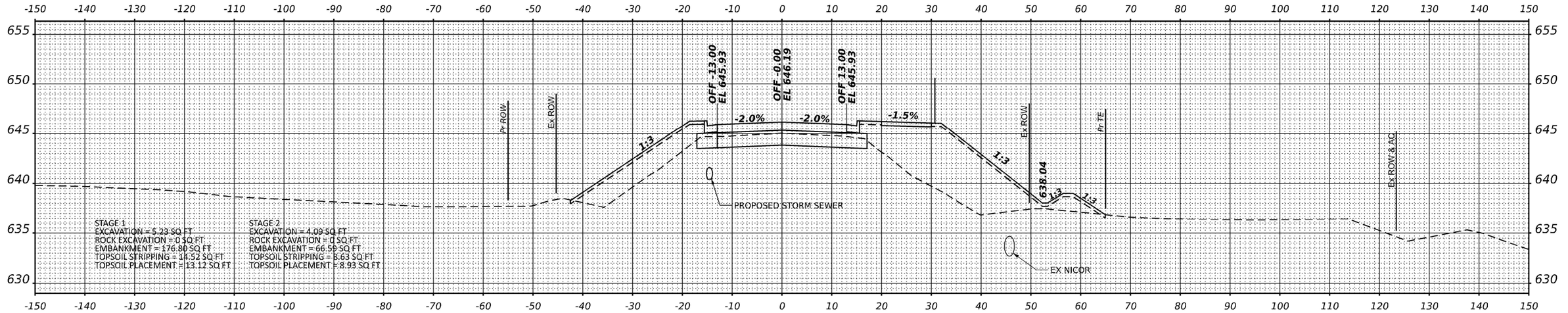

STA 23+00.00

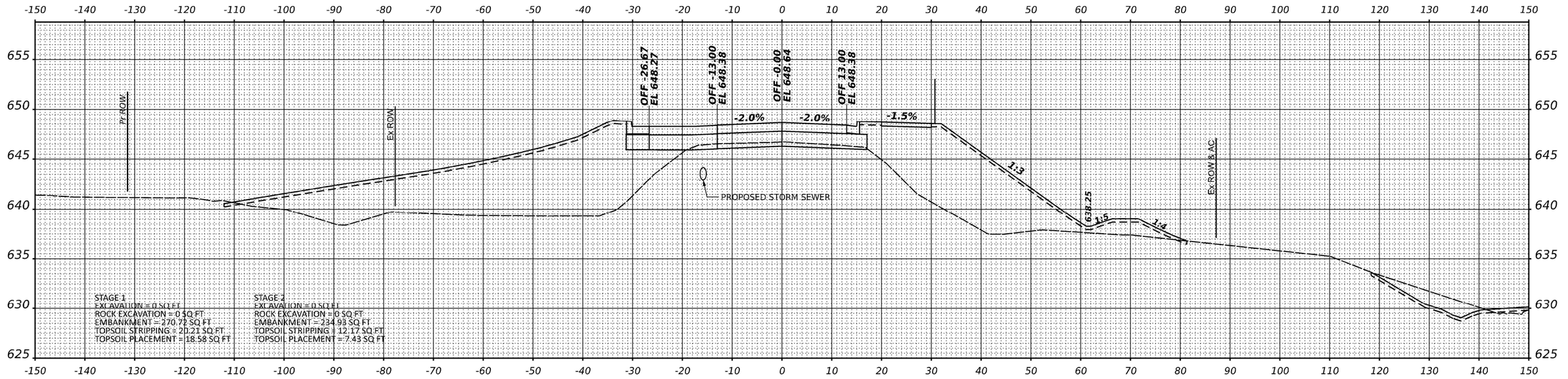

STA 22+50.00

MODEL: 22+50.00
FILE NAME: 22+50.00.dgn

TranSmart
411 South Wells Street Suite 1000
Chicago, Illinois 60607

USER NAME = nsallehan	DESIGNED - NS	REVISED - 5/7/2021	
	DRAWN - NS	REVISED -	
PLOT SCALE = 0.16666633 ' / In.	CHECKED - TW	REVISED -	
PLOT DATE = 3/29/2021	DATE - 2021/03/26	REVISED -	

STATE OF ILLINOIS
DEPARTMENT OF TRANSPORTATION

WALDRON ROAD
CROSS SECTIONS

SCALE: | SHEET 12 OF 15 SHEETS | STA. 22+50 | TO STA. 23+00

F.A.I. RTE.	SECTION	COUNTY	TOTAL SHEETS	SHEET NO.
57	139 HBR-6	KANKAKEE	202	196
		CONTRACT NO. 66997		
	ILLINOIS	FED. AID PROJECT		

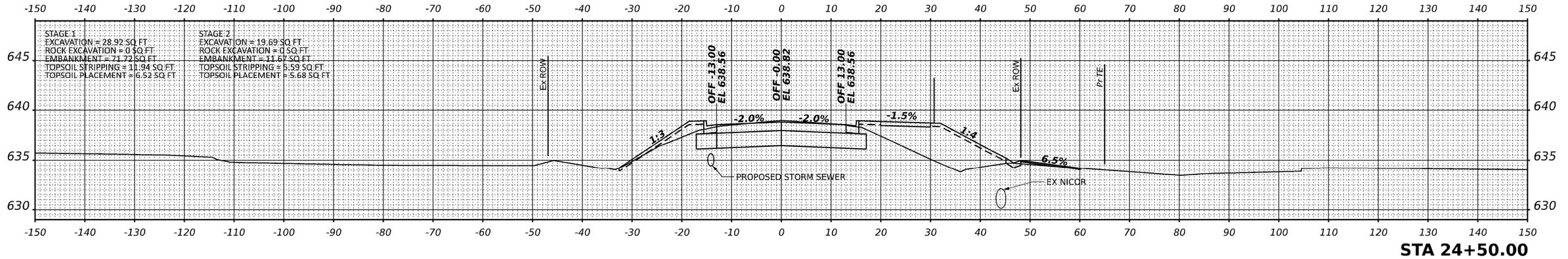

STA 24+50.00

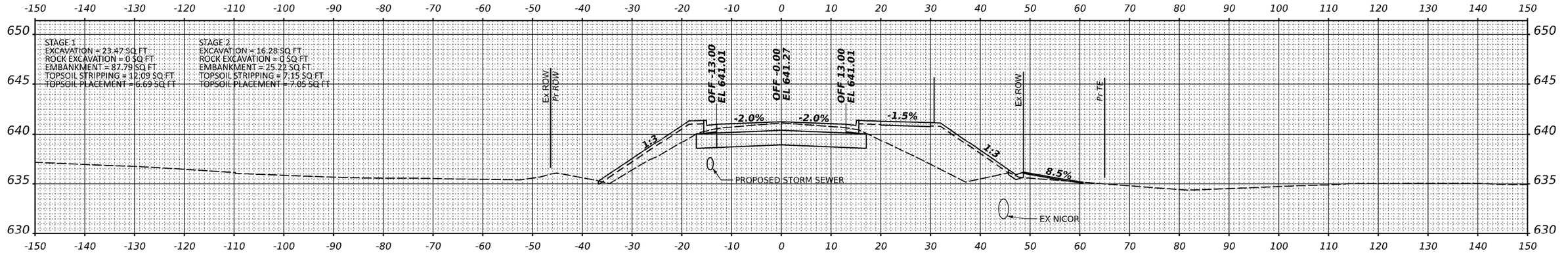

STA 24+00.00

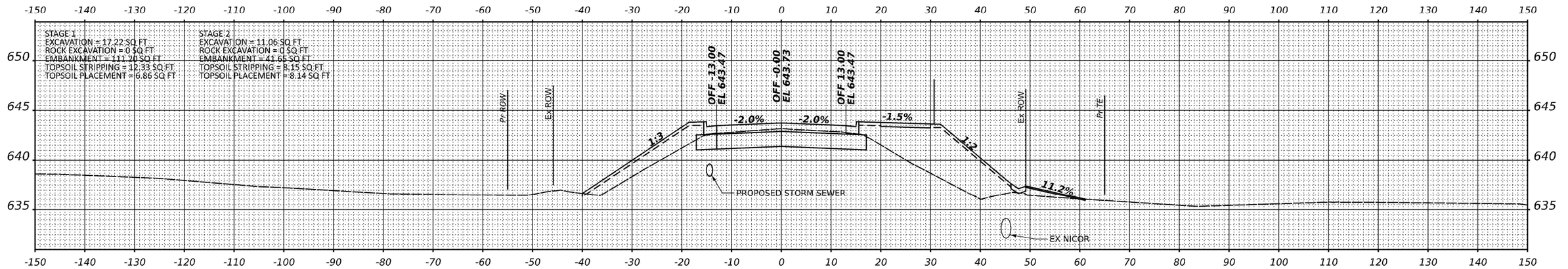

STA 23+50.00

MODEL: 23+50.00
FILE NAME: 23+50.00.dgn

TranSmart
411 South Wells Street Suite 1000
Chicago, Illinois 60607

USER NAME = nsalehian	DESIGNED - NS	REVISED - 5/7/2021
	DRAWN - NS	REVISED -
PLOT SCALE = 0.16666633 ' / In.	CHECKED - TW	REVISED -
PLOT DATE = 3/29/2021	DATE - 2021/03/26	REVISED -

STATE OF ILLINOIS
DEPARTMENT OF TRANSPORTATION

WALDRON ROAD
CROSS SECTIONS

SCALE: | SHEET 13 OF 15 SHEETS | STA. 23+50 | TO STA. 24+50

F.A.I. RTE.	SECTION	COUNTY	TOTAL SHEETS	SHEET NO.
57	139 HBR-6	KANKAKEE	202	197
		CONTRACT NO. 66997		
	ILLINOIS	FED. AID PROJECT		

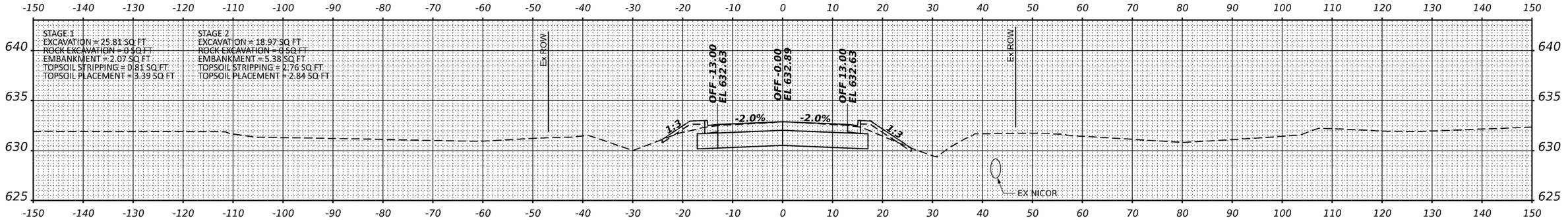

STA 26+00.00

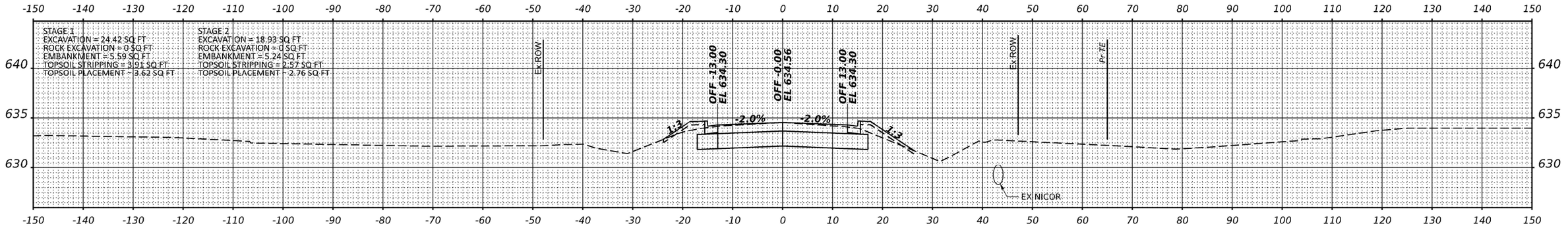

STA 25+50.00

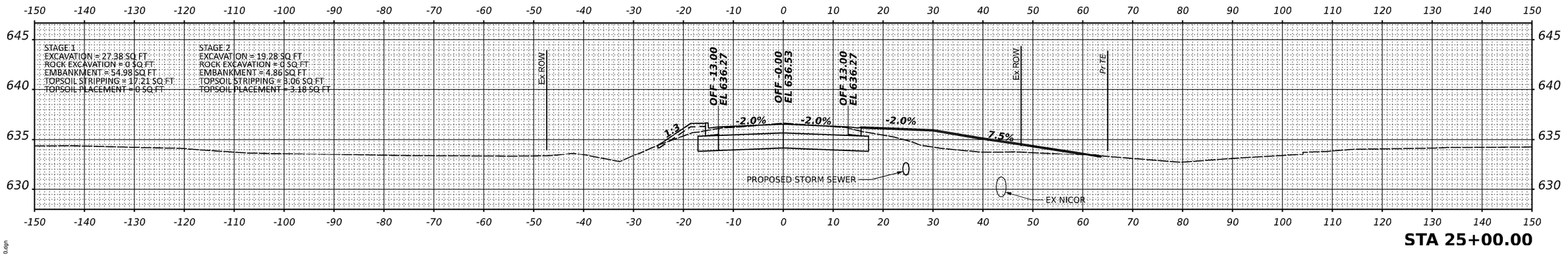

STA 25+00.00

MODEL: 25+00.00
FILE NAME: 25+00.00.dgn

TranSmart
411 South Wells Street Suite 1000
Chicago, Illinois 60607

USER NAME = nsalehian	DESIGNED - NS	REVISED - 5/7/2021	
	DRAWN - NS	REVISED -	
PLOT SCALE = 0.16666633 ' / In.	CHECKED - TW	REVISED -	
PLOT DATE = 3/29/2021	DATE - 2021/03/26	REVISED -	

STATE OF ILLINOIS
DEPARTMENT OF TRANSPORTATION

WALDRON ROAD
CROSS SECTIONS

SCALE: | SHEET 14 OF 15 SHEETS | STA. 25+00 | TO STA. 26+00

F.A.I. RTE.	SECTION	COUNTY	TOTAL SHEETS	SHEET NO.
57	139 HBR-6	KANKAKEE	202	198
		CONTRACT NO. 66863		
	ILLINOIS FED. AID PROJECT			

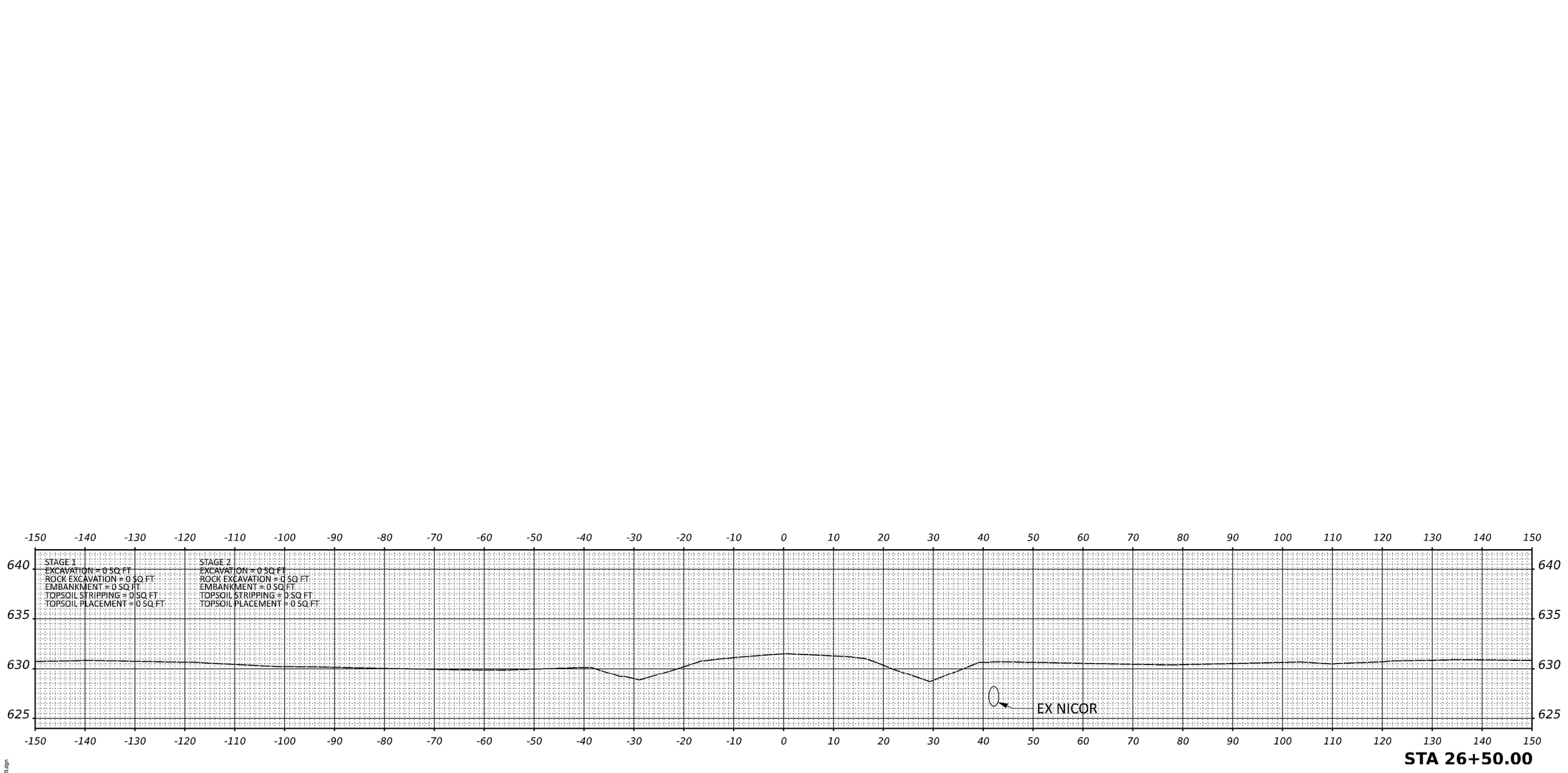

STA 26+50.00

MODEL: 26+50.00
FILE NAME: 26+50.00.dgn

TranSmart
411 South Wells Street Suite 1000
Chicago, Illinois 60607

USER NAME = nsallehan	DESIGNED - NS	REVISED -	
	DRAWN - NS	REVISED -	
PLOT SCALE = 0.16666633 ' / In.	CHECKED - TW	REVISED -	
PLOT DATE = 3/29/2021	DATE - 2021/03/26	REVISED -	

STATE OF ILLINOIS
DEPARTMENT OF TRANSPORTATION

WALDRON ROAD
CROSS SECTIONS

SCALE: | SHEET 15 OF 15 SHEETS | STA. 26+50 | TO STA. 26+50

F.A.I. RTE.	SECTION	COUNTY	TOTAL SHEETS	SHEET NO.
57	139 HBR-6	KANKAKEE	202	199
		CONTRACT NO. 66997		
	ILLINOIS FED. AID PROJECT			

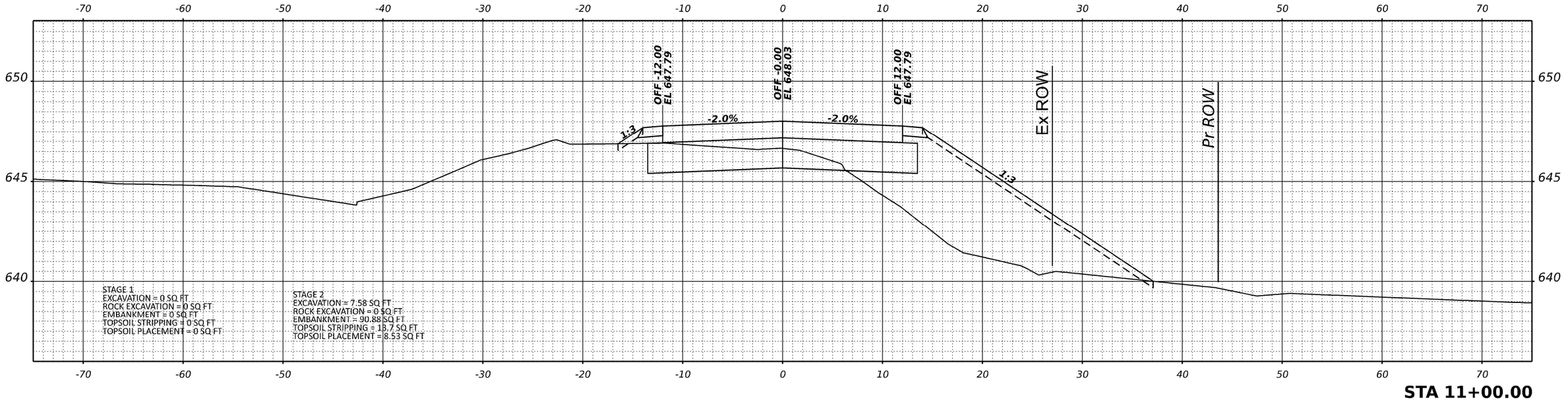

STA 11+00.00

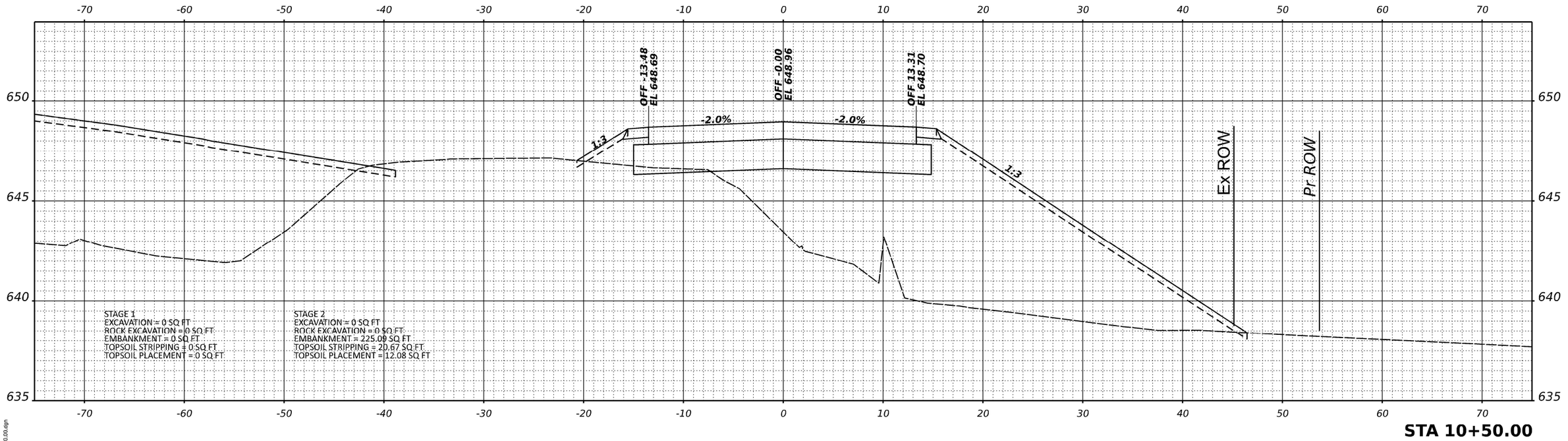

STA 10+50.00

MODEL: 10+50.00
FILE NAME: 10+50.00.dgn

TranSmart
411 South Wells Street Suite 1000
Chicago, Illinois 60607

USER NAME = nsallehlan	DESIGNED - NS	REVISED -
	DRAWN - NS	REVISED -
PLOT SCALE = 0.16666633 ' / In.	CHECKED - TW	REVISED -
PLOT DATE = 3/29/2021	DATE - 2021/03/26	REVISED -

STATE OF ILLINOIS
DEPARTMENT OF TRANSPORTATION

MUN 2530
CROSS SECTIONS

SCALE: | SHEET 1 OF 3 SHEETS | STA. 10+50 | TO STA. 11+00

F.A.I. RTE.	SECTION	COUNTY	TOTAL SHEETS	SHEET NO.
57	139 HBR-6	KANKAKEE	202	200
		CONTRACT NO. 66997		
	ILLINOIS FED. AID PROJECT			

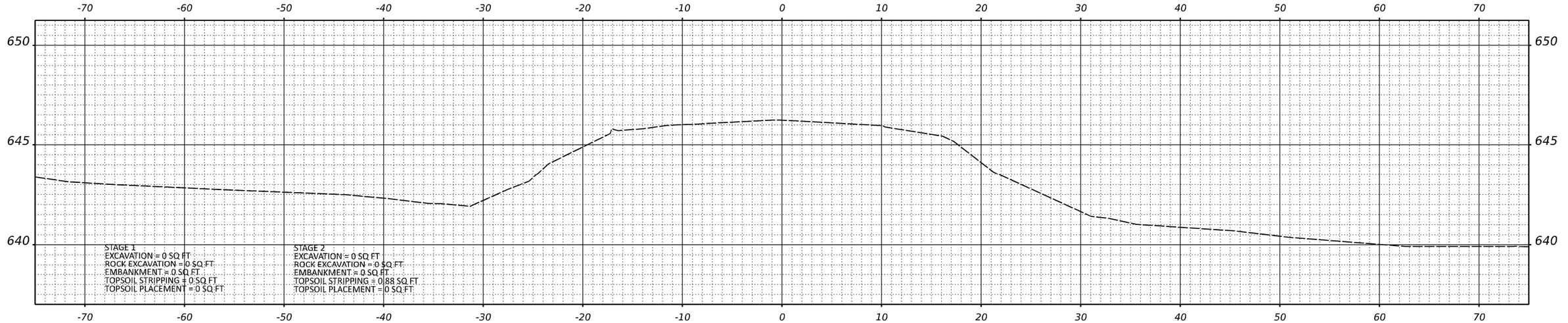

STA 12+00.00

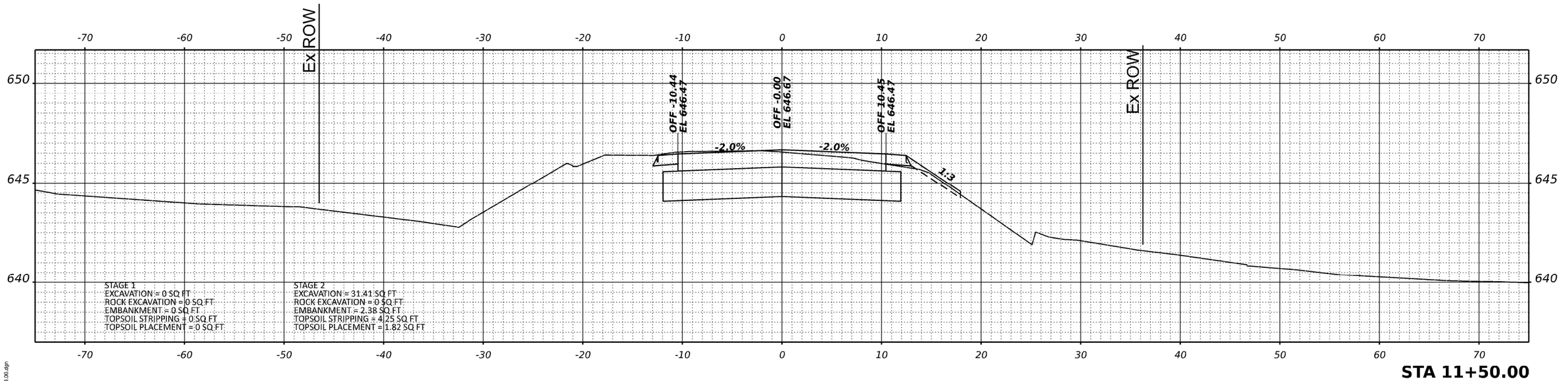

STA 11+50.00

MODEL: 11+50.00
FILE NAME: 11+50.00.dgn

TranSmart
411 South Wells Street Suite 1000
Chicago, Illinois 60607

USER NAME = nsallehan	DESIGNED - NS	REVISED -	
	DRAWN - NS	REVISED -	
PLOT SCALE = 0.16666633 ' / In.	CHECKED - TW	REVISED -	
PLOT DATE = 3/29/2021	DATE - 2021/03/26	REVISED -	

STATE OF ILLINOIS
DEPARTMENT OF TRANSPORTATION

MUN 2530
CROSS SECTIONS

SCALE: | SHEET 2 OF 3 SHEETS | STA. 11+50 | TO STA. 12+00

F.A.I. RTE.	SECTION	COUNTY	TOTAL SHEETS	SHEET NO.
57	139 HBR-6	KANKAKEE	202	201
		CONTRACT NO. 66997		
	ILLINOIS	FED. AID PROJECT		

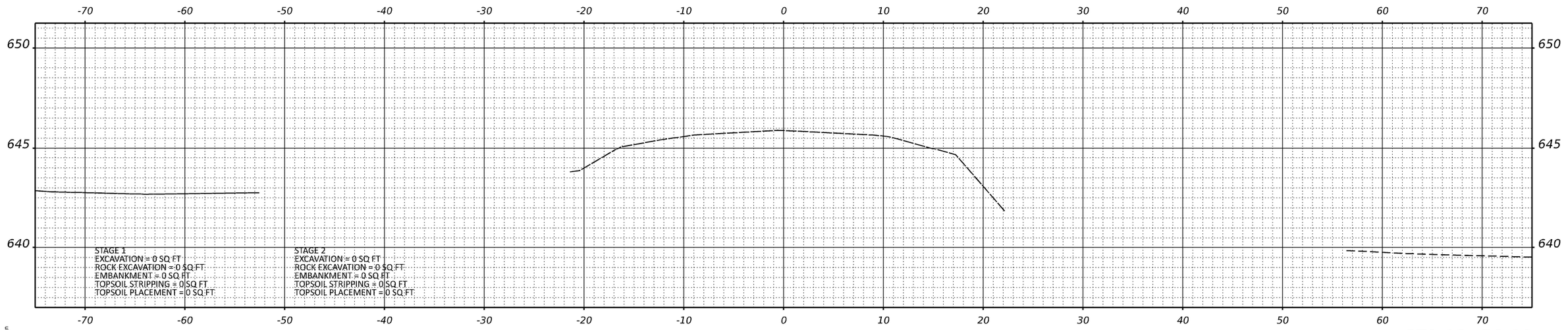

STA 12+50.00

MODEL: 12+50.00
FILE NAME: 12+50.00.dgn

TranSmart
411 South Wells Street Suite 1000
Chicago, Illinois 60607

USER NAME = nsallehlan	DESIGNED - NS	REVISED -
	DRAWN - NS	REVISED -
PLOT SCALE = 0.16666633 ' / In.	CHECKED - TW	REVISED -
PLOT DATE = 3/29/2021	DATE -	REVISED -

STATE OF ILLINOIS
DEPARTMENT OF TRANSPORTATION

MUN 2530
CROSS SECTIONS

SCALE: | SHEET 3 OF 3 SHEETS | STA. 12+50 | TO STA. 12+50

F.A.I. RTE.	SECTION	COUNTY	TOTAL SHEETS	SHEET NO.
57	139 HBR-6	KANKAKEE	202	202
		CONTRACT NO. 66997		
	ILLINOIS	FED. AID PROJECT		