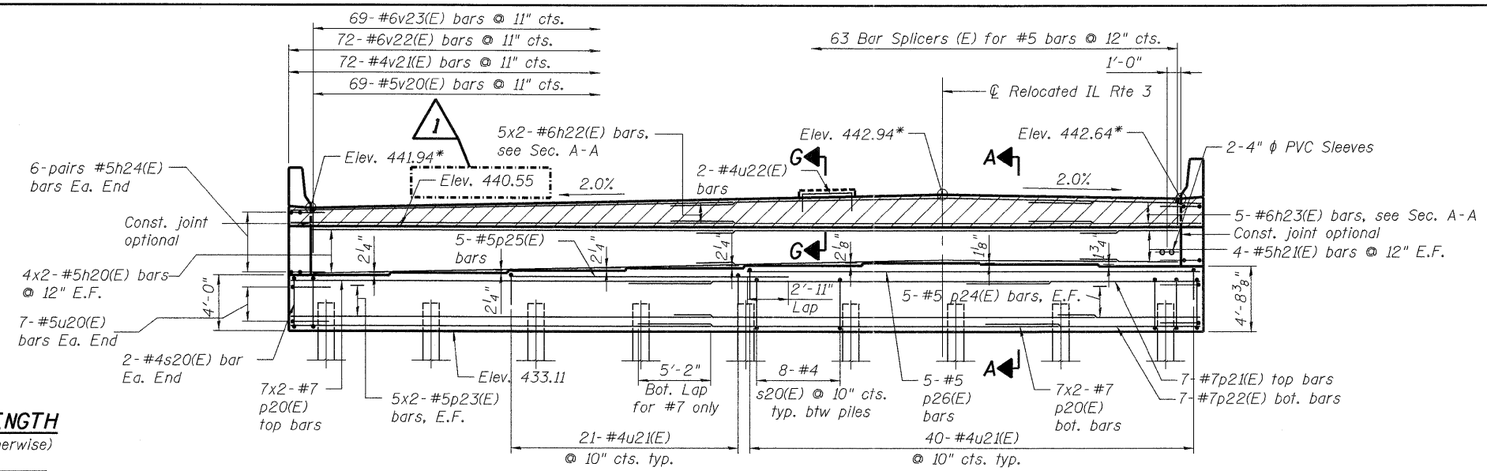

ELEVATION

(Looking North)

*Elevations @ Front Face of Backwall

MIN. LAP LENGTH

(Unless noted otherwise)

Bar Size	Lap
#5	2'-7"
#6	4'-5"
#7	5'-10"

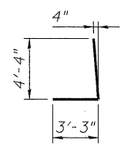

BAR h24(E)

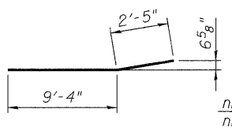

BAR h26(E)

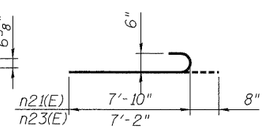

BARS n21(E) & n23(E)

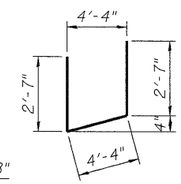

BAR u20(E)

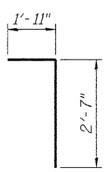

BAR v20(E)

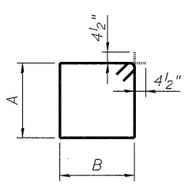

Bar	A	B
s20(E)	3'-8"	4'-5"
s21(E)	2'-2"	2'-2"

BARS s20(E) & s21(E)

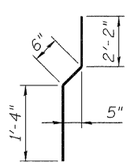

BAR v21(E)

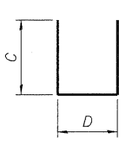

Bar	C	D
n20(E)	7'-10"	1'-4"
n22(E)	7'-2"	1'-4"
u21(E)	2'-3"	4'-2"
u22(E)	1'-9"	3'-9"

BARS n20(E), n22(E), u21(E), & u22(E)

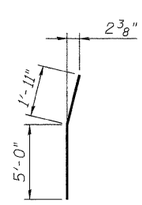

BAR v24(E)

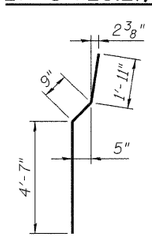

BAR v25(E)

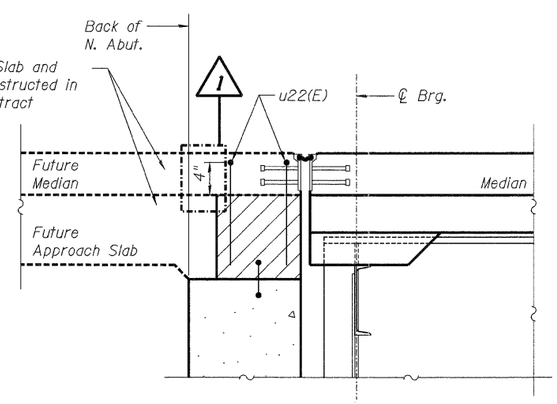

SECTION G-G

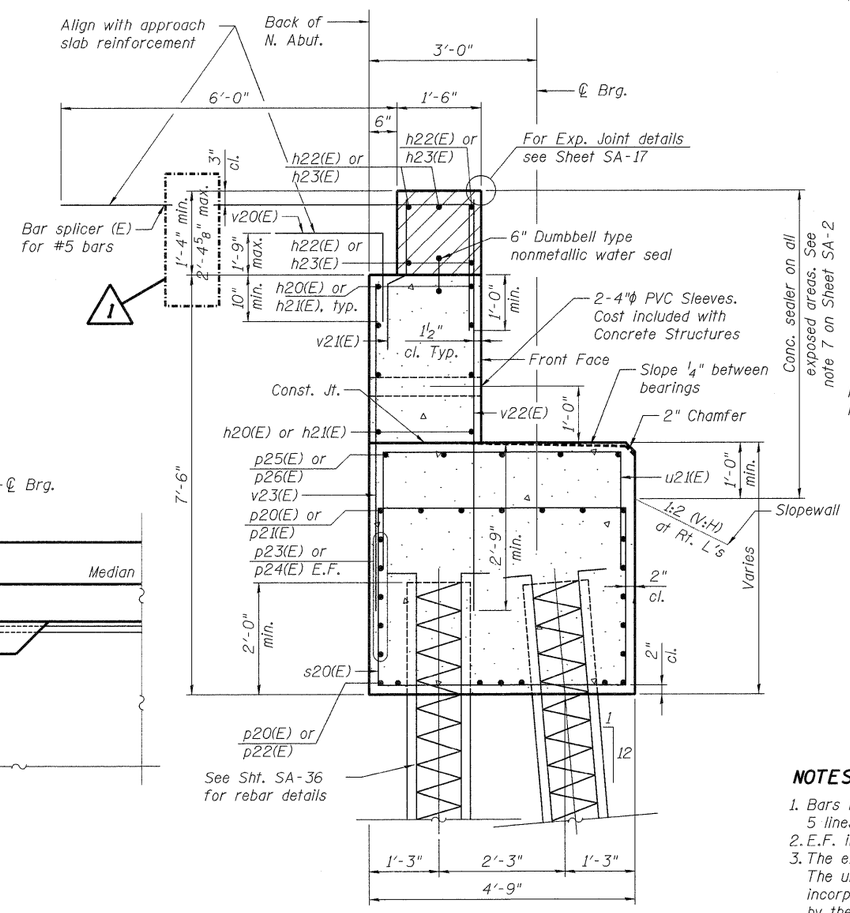

SECTION A-A

NORTH ABUTMENT BAR LIST

Bar	No.	Size	Length	Shape
h20(E)	16	#5	30'-0"	
h21(E)	8	#5	7'-0"	
h22(E)	10	#6	30'-0"	
h23(E)	5	#6	13'-10"	
h24(E)	24	#5	7'-7"	
h25(E)	28	#5	11'-8"	
h26(E)	20	#5	11'-9"	
n20(E)	14	#6	17'-0"	
n21(E)	8	#6	8'-6"	
n22(E)	14	#6	15'-8"	
n23(E)	8	#6	7'-10"	
p20(E)	28	#7	30'-0"	
p21(E)	7	#7	16'-9"	
p22(E)	7	#7	15'-5"	
p23(E)	20	#5	30'-0"	
p24(E)	10	#5	10'-3"	
p25(E)	5	#5	19'-10"	
p26(E)	5	#5	32'-6"	
p27(E)	24	#6	11'-10"	
s20(E)	68	#4	16'-11"	
s21(E)	24	#4	9'-5"	
u20(E)	14	#5	9'-6"	
u21(E)	61	#4	8'-8"	
u22(E)	2	#4	7'-3"	
v20(E)	69	#5	4'-6"	
v21(E)	72	#4	4'-0"	
v22(E)	72	#6	7'-6"	
v23(E)	69	#6	6'-1"	
v24(E)	8	#6	6'-11"	
v25(E)	28	#6	7'-3"	
v26(E)	36	#5	6'-7"	

For details of Bar Splicers, see sheet SA-32
For details of piles, see sheet SA-36

NORTH ABUTMENT BILL OF MATERIALS

Item	Unit	Total
Concrete Structures	Cu. Yd.	90.3
Reinforcement Bars, Epoxy Coated	Pound	10,400
Furnishing Metal Shell Piles 14"x0.250"	Foot	1,010
Driving Piles	Foot	1,010
Test Pile Metal Shells	Each	1
Structure Excavation	Cu. Yd.	179
Concrete Sealer	Sq. Ft.	601

NOTES:

1. Bars indicated thus 5x3-#5 etc. indicates 5 lines with 3 lengths per line.
2. E.F. indicates each face.
3. The exposed end of v20(E) bars are to be protected. The unused half of the abutment bar splicers to be incorporated into the approach slab are to be stored by the Contractor at a location as directed by the Engineer.