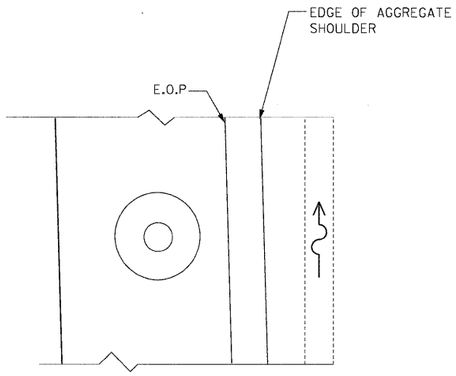

PLAN VIEW
MANHOLE IN SHOULDER WITH GUARDRAIL

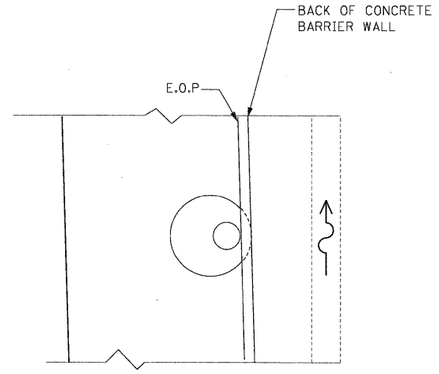

PLAN VIEW
INLET AND CATCH BASIN IN SHOULDER WITH CONCRETE BARRIER WALL

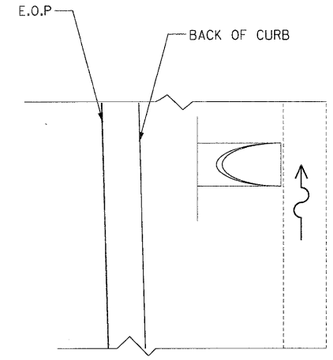

PLAN VIEW
FLARED END SECTION

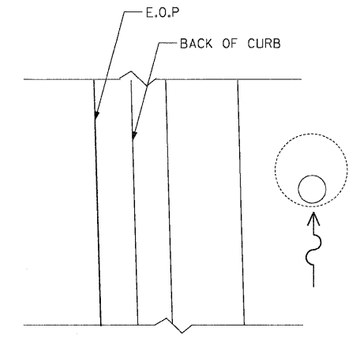

PLAN VIEW
INLET AND CATCH BASIN IN DITCH

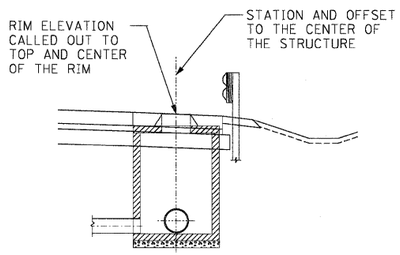

SECTION
MANHOLE IN SHOULDER WITH GAURDRAIL
(CONE AND FLAT SLAB TOP SECTIONS)

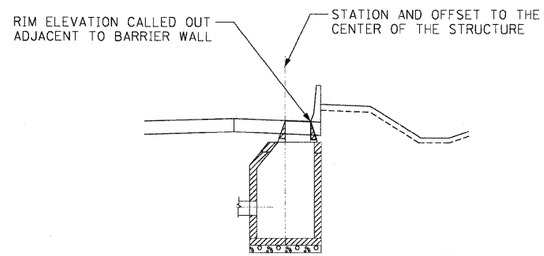

SECTION
INLET AND CATCH BASIN IN SHOULDER WITH CONCRETE BARRIER WALL

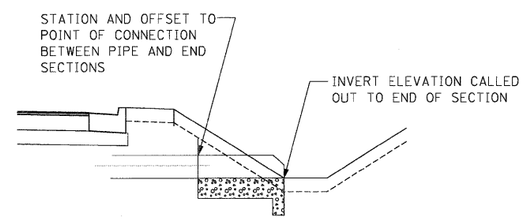

ELEVATION
FLARED END SECTION

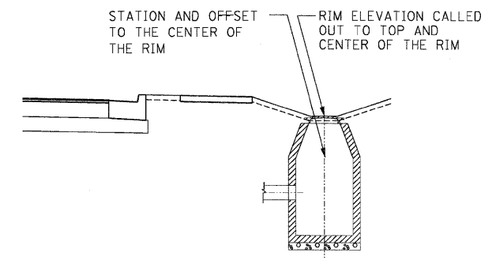

ELEVATION
INLET AND CATCH BASIN IN DITCH OR SWALE

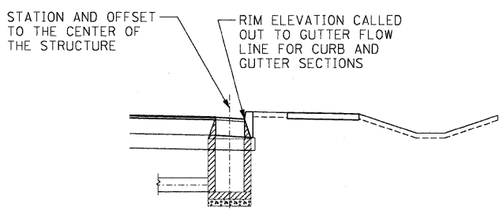

ELEVATION
INLET WITH CURB AND GUTTER

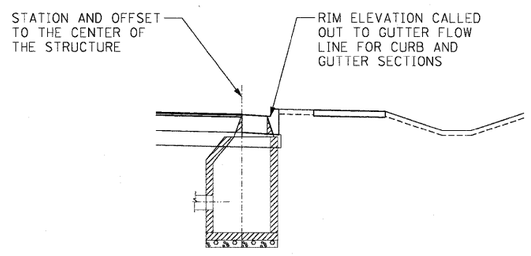

ELEVATION
CATCH BASIN WITH CURB AND GUTTER
(CONE AND FLAT SLAB TOP SECTIONS)

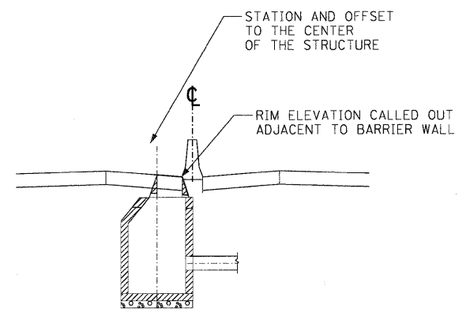

ELEVATION
CATCH BASIN AND INLET IN MEDIAN

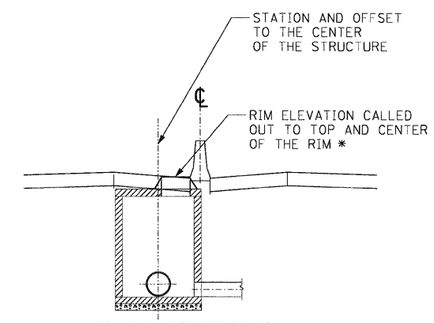

* FRAME & LIDS TO BE ORIENTED ADJACENT TO BARRIER WALL

ELEVATION
MANHOLE IN MEDIAN
(CONE AND FLAT SLAB TOP SECTIONS)