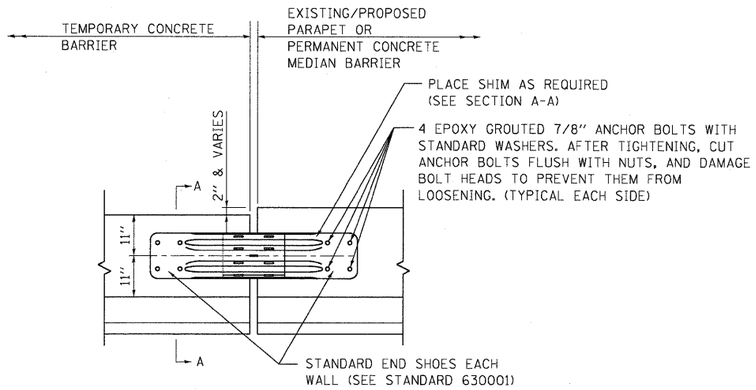

CONNECTION DETAIL

CONNECTION OF TEMPORARY CONCRETE BARRIER WALL TO THE EXISTING/PROPOSED PARAPET OR CONCRETE MEDIAN BARRIER WALL WILL NOT BE PAID FOR SEPARATELY. THE COST OF THIS WORK SHALL BE INCLUDED IN THE CONTRACT UNIT PRICE FOR TEMPORARY CONCRETE BARRIER (INSTALL ONLY) OR RELOCATE TEMPORARY CONCRETE BARRIER AS APPLICABLE.

NOTE: DETAIL IS SHOWN FOR INSTANCE WHEN TRAFFIC IS TO THE RIGHT OF THE CONNECTION. USE OPPOSITE HAND WHEN TRAFFIC IS TO THE LEFT OF THE CONNECTION.

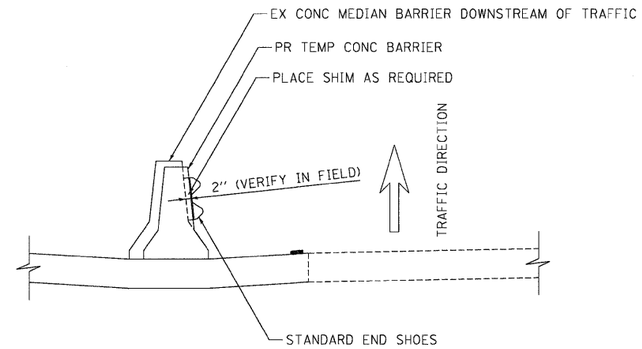

SECTION A-A

CONNECTION BETWEEN TEMPORARY CONCRETE BARRIER AND EXISTING CONCRETE MEDIAN BARRIER

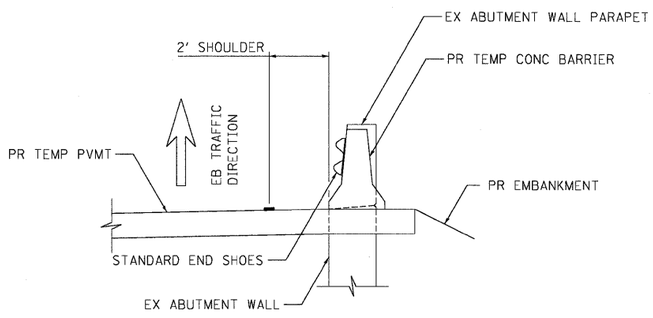

CONNECTION BETWEEN TEMPORARY CONCRETE BARRIER AND PROPOSED ABUTMENT WALL PARAPET

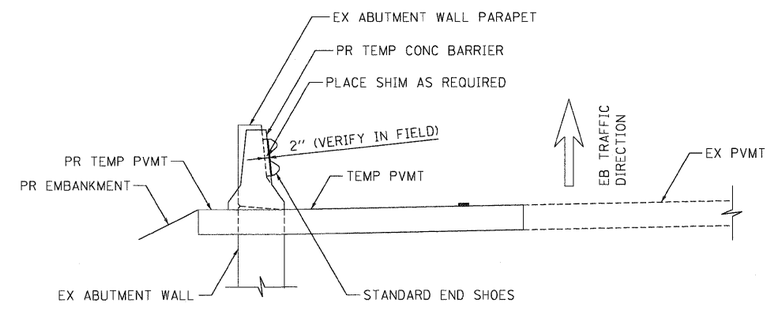

SECTION A-A

CONNECTION BETWEEN TEMPORARY CONCRETE BARRIER AND EXISTING ABUTMENT WALL PARAPET

..\DIGBK90-BORDER01.DGN HAYWARMZ \\FS-0044\AMVAULT\D-TRANS.07\2202\21375-001\CIVIL\CADD\60K90\SHEET\DIGBK90-SHT-ROADDETD03.DGN
5-12-2011, 16:05:56

FILE NAME = $FILEL$	USER NAME = $USER$	DESIGNED - DDH	REVISED -	STATE OF ILLINOIS DEPARTMENT OF TRANSPORTATION FAP ROUTE 345 / US ROUTE 20	ROADWAY DETAILS TEMPORARY CONCRETE BARRIER CONNECTION DETAILS	F.A.P RTE.	SECTION	COUNTY	TOTAL SHEETS	SHEET NO.
		DRAWN - JFS	REVISED -			345	8R-HB-2-BY-1	KANE	434	57
TENG & ASSOCIATES, INC. ENGINEERS/ARCHITECTS/PLANNERS CHICAGO, ILLINOIS	PLOT SCALE = $SCALE$	CHECKED - DDH	REVISED -					CONTRACT NO. 60K90		
	PLOT DATE = $DATE$	DATE - 05/18/11	REVISED -		SCALE: scale / SHEET NO. OF SHEETS / STA. fromstationTO STA. tostation	FED. ROAD DIST. NO.	ILLINOIS	FED. AID PROJECT		