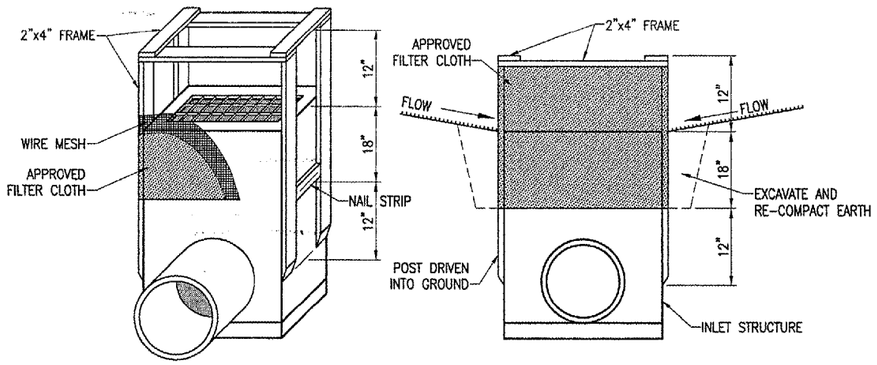

INLET PROTECTION DETAIL

"NOT TO SCALE"

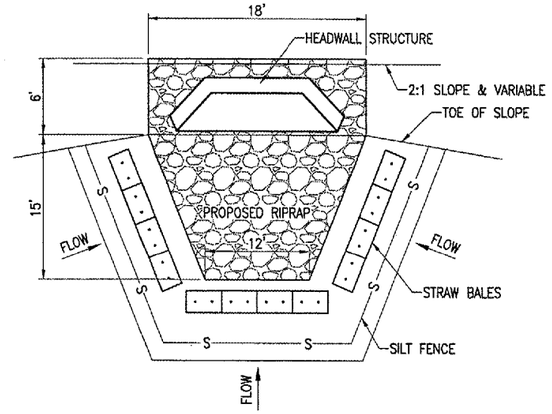

HEADWALL STRUCTURE PROTECTION

"NOT TO SCALE"

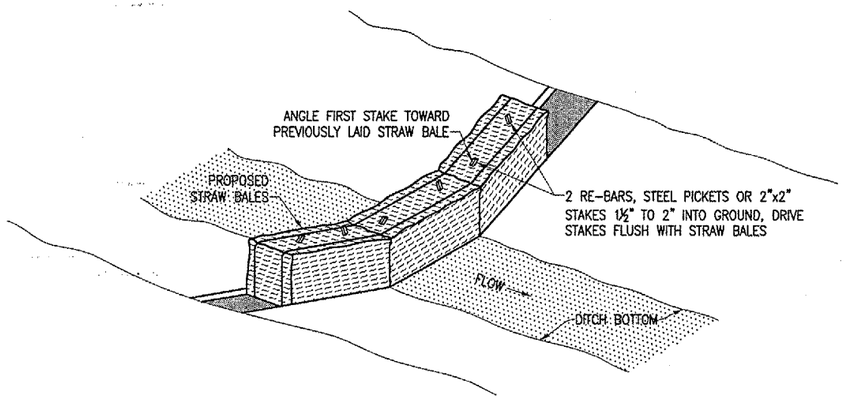

DITCH CHECK DETAIL

"NOT TO SCALE"

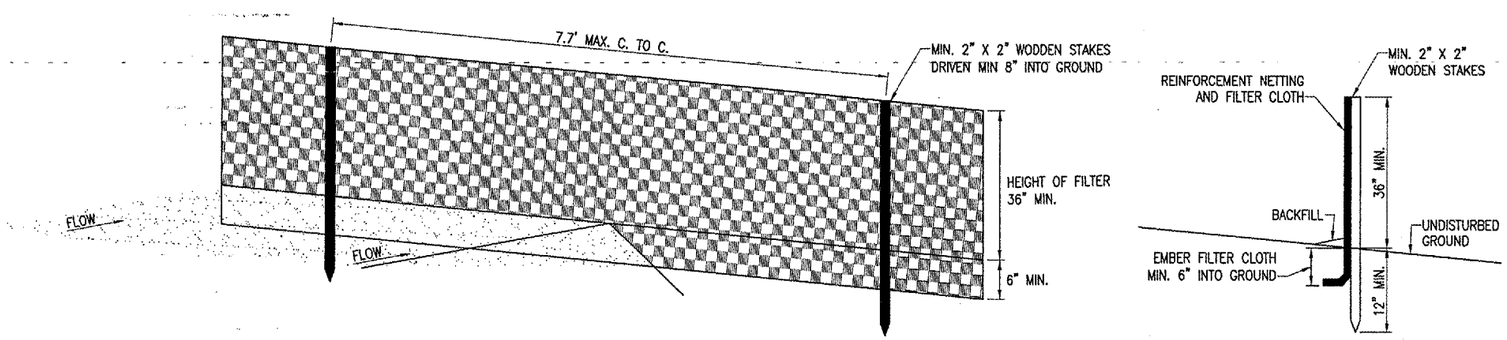

PERSPECTIVE VIEW

SECTION

SILT FENCE DETAIL

"NOT TO SCALE"

HEADWALL STRUCTURE PROTECTION NOTES

THE PROPOSED HEADWALL STRUCTURE PROTECTION WILL BE CONSTRUCTED ACCORDING TO THE DETAILS SHOWN ON THIS SHEET AND WILL INCLUDE STRAW BALES AND SILT FENCE.

THE RIPRAP QUANTITY IN THE HEADWALL STRUCTURE PROTECTION WILL BE PAID SEPERATELY BY ITEM: AR156540 "RIPRAP."

THE HEADWALL STRUCTURE PROTECTION WILL BE PAID FOR UNDER ITEM:
AR156521 "HEADWALL PROTECTION"_____ 2 EACH.

RIPRAP NOTES FOR HEADWALL STRUCTURE PROTECTION

THE PROPOSED RIPRAP WILL BE PLACED TO THE DIMENSIONS AS SHOWN ON THIS SHEET AND IN ACCORDANCE WITH THE SPECIAL PROVISIONS.

INSTALLATION OF FILTER FABRIC WILL BE REQUIRED UNDER THE STONE RIPRAP. THE FILTER FABRIC MATERIAL WILL BE INCLUDED AS PART OF THE RIPRAP INSTALLATION AND NO ADDITIONAL COMPENSATION WILL BE ALLOWED.

THE BED OF THE RIPRAP WILL BE 12" IN DEPTH AND SHALL BE TRIMMED AND SHAPED TO CONFORM WITH THE FINISHED GRADES.

THE RIPRAP WILL BE PAID FOR UNDER ITEM:
AR156540 "RIPRAP"_____ 74 S.Y.

INLET PROTECTION NOTES

ALL PROPOSED EROSION CONTROL MEASURES SHALL BE COMPLETED AS SHOWN AND DETAILED ON THIS SHEET.

THE PROPOSED INLET PROTECTION WILL PREVENT ANY EROSION TO ENTER THE PROPOSED AND EXISTING STORM SEWER SYSTEM.

THE EROSION CONTROL MEASURES SHALL BE CONSTRUCTED IN ACCORDANCE WITH IEPA STANDARDS AND SPECIFICATIONS FOR SOIL EROSIONS AND SEDIMENT CONTROL.

THE SILT FENCE WILL BE PAID FOR UNDER THE INLET PROTECTION ITEM.

THE EROSION CONTROL MEASURES WILL BE PAID FOR UNDER ITEM:
AR156520 "INLET PROTECTION"_____ 9 EACH.

DITCH CHECK NOTES:

ALL PROPOSED EROSION CONTROL MEASURES SHALL BE COMPLETED AS SHOWN AND DETAILED ON THIS SHEET.

THE DITCH CHECK LOCATIONS ARE AS SPECIFIED ON SHEET 51.

THE EROSION CONTROL MEASURES SHALL BE CONSTRUCTED IN ACCORDANCE WITH IEPA STANDARDS AND SPECIFICATIONS FOR SOIL EROSIONS AND SEDIMENT CONTROL.

THE DITCH CHECKS WILL BE PAID FOR UNDER ITEM:
AR156511 "DITCH CHECK"_____ 16 EACH.

EROSION CONTROL NOTES

ALL PROPOSED EROSION CONTROL MEASURES SHALL BE COMPLETED AS DETAILED ON THIS EROSION CONTROL PLAN AND IN ACCORDANCE WITH THE SPECIFICATIONS.

EROSION CONTROL MEASURES ARE GOVERNED BY THE ILLINOIS ENVIRONMENTAL PROTECTION AGENCY'S STANDARDS AND SPECIFICATIONS FOR SOIL EROSIONS AND SPECIFICATION FOR SOIL EROSIONS AND SEDIMENT CONTROL.

FILTER FENCE FOR STRUCTURE PROTECTION AS SHOWN ON THIS SHEET.

THE PROPOSED INLET PROTECTION WILL BE PLACED AT THE LOCATIONS SHOWN ON THIS SHEET.

INSPECTION OF THE INLET PROTECTION SHALL BE FREQUENT AND REPAIR/REPLACEMENT SHALL BE MADE PROMPTLY AS NEEDED.

EROSION CONTROL FENCE SHALL BE REMOVED WHEN THEY HAVE SERVED THEIR USEFULNESS SO AS NOT TO BLOCK OR IMPEDE STORM WATER DRAINAGE.

COST OF REMOVAL AND REPLACEMENT SHALL BE INCLUDED IN THE UNIT PRICE FOR ITEM: AR156520 "INLET PROTECTION."

INLET PROTECTION IS TO INCLUDE ALL INCIDENTALS NECESSARY TO CONSTRUCT THESE ITEMS AND WILL BE PAID FOR UNDER ITEM: AR156520 "INLET PROTECTION."

DATE	REVISION	BY

DECATUR AIRPORT
DECATUR, ILLINOIS
IL. PROJ.: DEC-3414 A.I.P. PROJ.: 3-17-0033-28

HSI Project No. 802-04TXYD
Filename R-581SWP.DWG
Scale N/A
Date 10/28/04

LAYOUT	WJM	10/28/04
DRAWN	CCC	10/28/04
REVIEWED	WJM	06/07/05

HANSON
Engineers, Architects, Scientists
1525 South Sixth Street
Springfield, Illinois 62703-2896
Offices Nationwide

TAXIWAY G WIDENING PHASE II

PROPOSED EROSION CONTROL DETAILS & NOTES

52

JUN 10, 2005 2:39 PM CCC
I:\AIRPORTS\DECATUR\802-04TXYD\AIRPORT\SHEETS\CONTRACT-2\R-581SWP.DWG - Details