STATE OF ILLINOIS
DEPARTMENT OF PUBLIC WORKS & BUILDINGS
DIVISION OF HIGHWAYS

ROUTE NO.	SECTION	COUNTY	TOTAL SHEETS	SHEET NO.
F.A.P. 10	13-VB	TAZEWELL	49	28
FED. ROAD DIST. NO. 7	ILLINOIS	FED. AID PROJECT-		

SHEET NO. 60
65 SHEETS

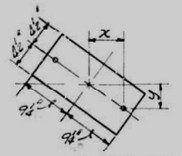

Location	X	Y
So. Brg. Bms. 1-4	6⅞"	4⅜"
So. Brg. Bm. 5	5⅞"	4 11/16"
No. Brg. Bms. 1-4	6⅞"	3⅜"
No. Brg. Bm. 5	6 9/16"	3⅜"

BOTTOM PLATE DETAIL

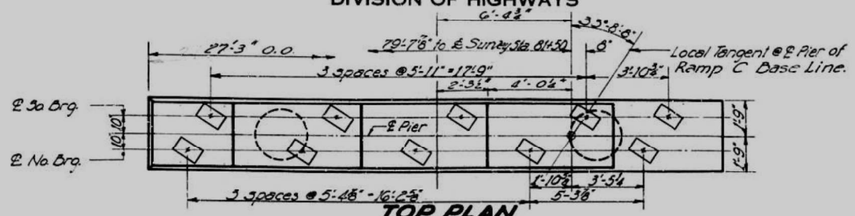

TOP PLAN
Showing bott. brg. pl.

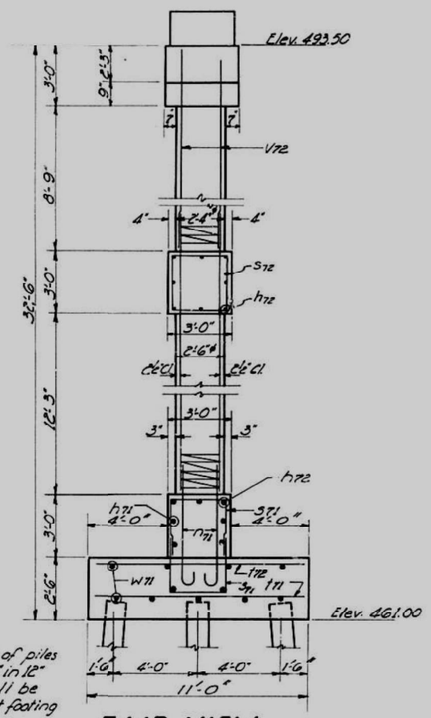

Notes: Outside rows of piles shall be battered 2" in 12"
All edges shall be chamfered ¾" except footing

END VIEW

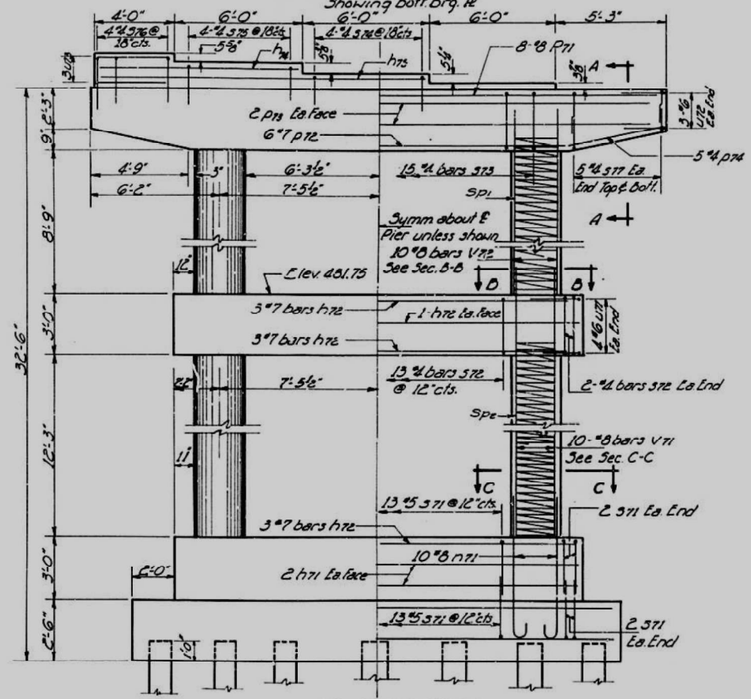

ELEVATION
Looking South

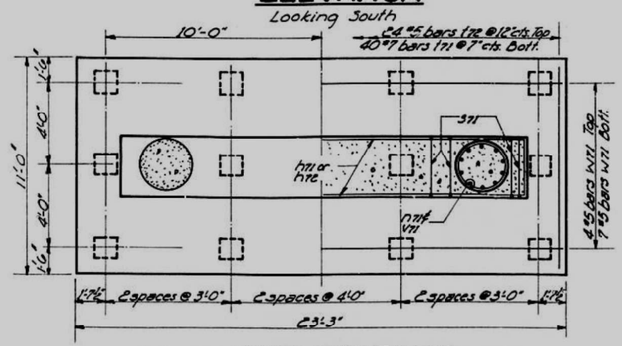

FOOTING PLAN

Sp1 C5" Dia. spiral ⅜" Rod 3" pitch 1½ extra turns top & bottom, the spiral must extend 2" in the cap. For Spiral details, see Sheet #58.

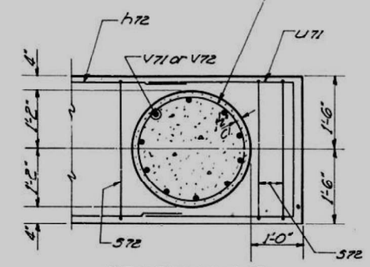

SECTION B-B

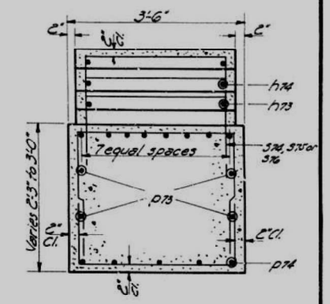

SECTION A-A

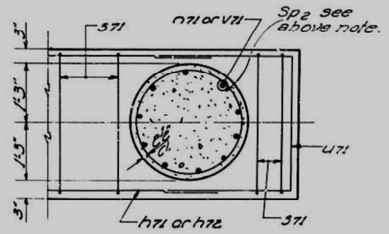

SECTION C-C

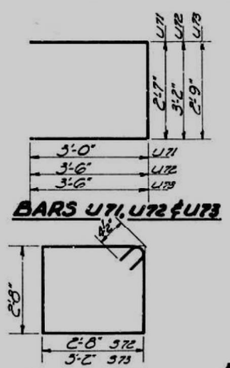

BARS U71, U72 & U73

BARS S72 & S73

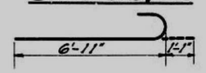

BAR n71

Bar	A	B
s71	2'-8"	2'-10
s74	2'-10"	1'-6"
s75	2'-10	2'-0"
s76	2'-10	2'-6"
s77	3'-2"	1'-11"

BARS S71, S74 to S77

BAR LIST

Bar	No.	Size	Length	Shape
h71	4	#5	19'-0"	—
h72	11	#7	19'-0"	—
h73	2	#4	15'-0"	—
h74	2	#4	9'-0"	—
n71	20	#8	8'-0"	⊃
p11	8	#8	27'-0"	—
p12	6	#7	17'-0"	—
p13	4	#4	27'-0"	—
p14	10	#4	5'-0"	—
s71	34	#5	8'-4"	⊏
s72	17	#4	11'-5"	⊏
s73	15	#4	12'-5"	⊏
s74	4	#4	5'-10"	⊏
s75	4	#4	6'-10"	⊏
s76	4	#4	7'-10"	⊏
s77	20	#4	7'-0"	⊏
t71	40	#7	10'-9"	—
t72	24	#5	10'-9"	—
Sp1	2	#3	*	
U71	8	#6	8'-7"	⊐
U72	6	#6	10'-2"	⊐
U73	3	#6	9'-9"	⊐
Sp2	2	#3	*	
V71	20	#8	17'-3"	—
V72	20	#8	11'-0"	—
W71	11	#5	23'-0"	—

* See Sect. B-B

BILL OF MATERIAL

Item	Unit	Quantity
Class X Conc.	Cu. Yds.	55.4
Reinforcement Bars	Lbs.	6,280
Concrete Piles	Lin. Ft.	630

PILE DATA

Type	Concrete
Est. Length	30 ft.
Capacity	30 Tons.
No. Req'd.	21

DESIGNED	T. Tanaka
CHECKED	J. M. Jayworth
DRAWN	J. M. Jayworth, A. Barraza
CHECKED	T. Tanaka

May 29 1962
EXAMINED — ENGINEER OF BRIDGE AND TRAFFIC STRUCTURES
PASSED — ENGINEER OF DESIGN
APPROVED — CHIEF HIGHWAY ENGINEER

PIER 6C

CEDAR STREET EXTENSION
F.A. RT. 10 SEC. 13-VB
TAZEWELL COUNTY
STATION 78 + 28.29

STATE OF ILLINOIS
DEPARTMENT OF PUBLIC WORKS & BUILDINGS
DIVISION OF HIGHWAYS

ROUTE NO.	SECTION	COUNTY	TOTAL SHEETS	SHEET NO.
F.A.I. 10	13-VB	TAZEWELL	49	29
FED. ROAD DIST. NO. 7	ILLINOIS	FED. AID PROJECT-		

SHEET NO. 61
65 SHEETS

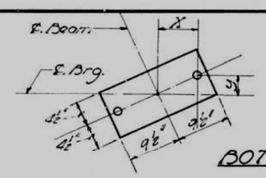

Location	x	y
So. Brg. Bms. 1-5	7½"	3½"
No. Brg. Bms. 1-4.	7½"	2½"
No. Brg. Bm 5	7½"	2"

BOTTOM PLATE DETAIL

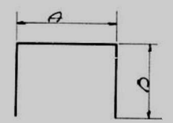

BARS 301, 302, 303, 304, 305 & 306

BARS 201

Bar	A	B
301	2'-9"	3'-6"
302	2'-9"	11'-7"
303	3'-2"	1'-11"
304	2'-11"	2'-0"
305	2'-11"	2'-6"
306	2'-11"	3'-0"

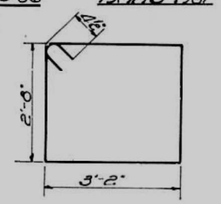

BAR 307

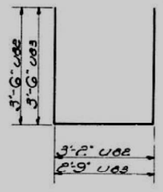

BARS U 02 & 03

Notes:
Outside rows of piles shall be battered 2" in 12".
All edges shall be chamfered ¾" except footing.

PILE DATA

Type	Concrete
Est. Length	35 Ft.
Capacity	30 Tons
No. Req'd.	18

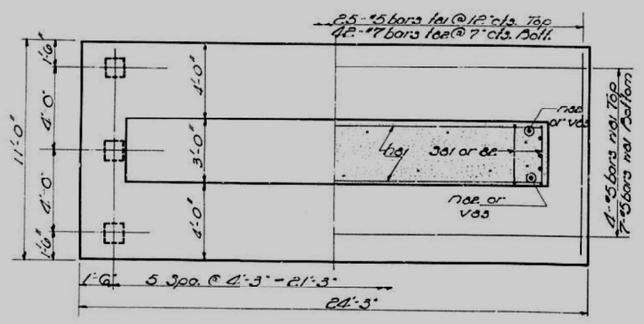

FOOTING PLAN

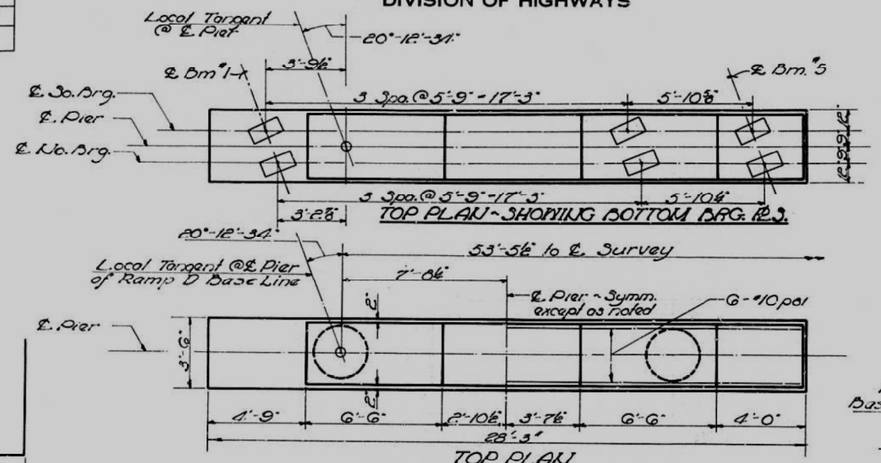

TOP PLAN

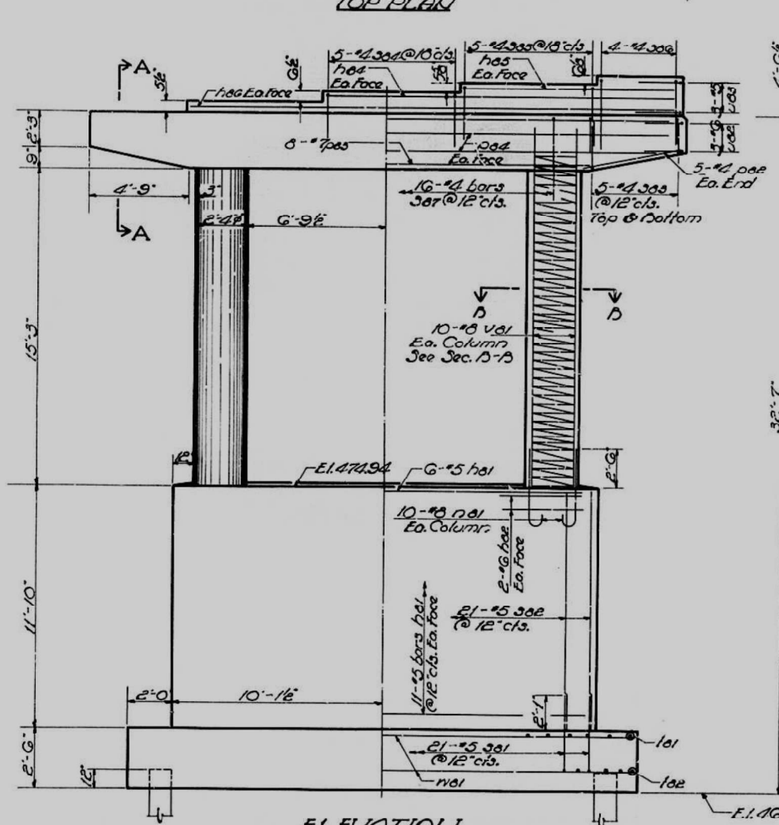

ELEVATION
LOOKING SOUTH

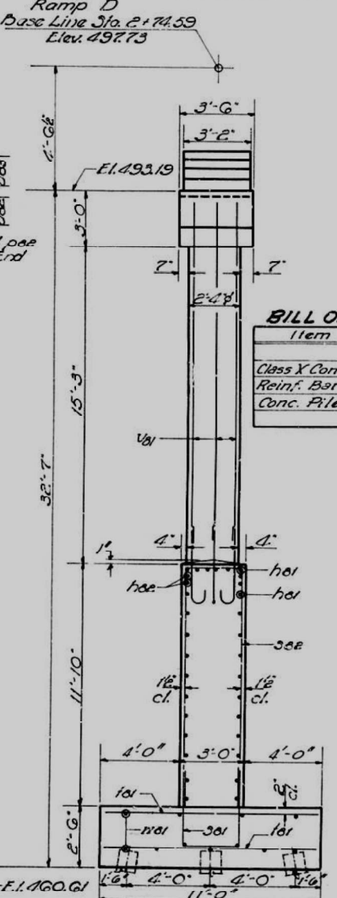

END VIEW

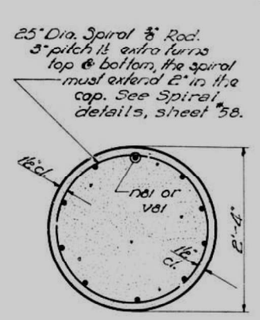

SECTION D-D

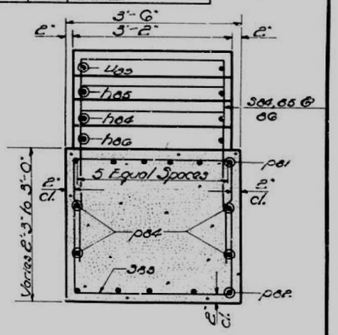

SECTION A-A

BAR LIST

Bar	No.	Size	Length	Sl. pos
b01	28	#5	20'-0"	—
b02	8	#6	5'-0"	—
b04	2	#5	15'-9"	—
b05	2	#5	10'-0"	—
b06	2	#5	23'-0"	—
n01	20	#8	7'-0"	⊃
p01	6	#10	23'-0"	—
p02	10	#4	5'-0"	—
p03	8	#7	13'-9"	—
p04	4	#5	27'-0"	—
301	21	#5	9'-9"	⊓
302	21	#5	25'-11"	⊓
303	20	#4	7'-0"	⊓
304	5	#4	6'-11"	⊓
305	5	#4	7'-11"	⊓
306	4	#4	8'-11"	⊓
307	16	#4	12'-5"	▭
f01	25	#5	10'-9"	—
f02	42	#7	10'-9"	—
U02	6	#6	10'-2"	▭
U03	3	#5	9'-9"	▭
v01	20	#8	17'-6"	—
Sp.	2	#3	*	▭
w01	11	#5	22'-0"	—

* See Sect. B-B

BILL OF MATERIAL

Item	Unit	Quantity
Class X Concrete	Cu. Yds.	68.8
Reinf. Bars	Lbs	6,290
Conc. Piles	Lin. Ft.	630

PIER 5D

CEDAR STREET EXTENSION
F.A. RT. 10 SEC. 13-VB
TAZEWELL COUNTY
STATION 78+28.29

DESIGNED	T. Tanaka	
CHECKED	J. M. Tyawoch	
DRAWN	J. M. Tyawoch / M. Jacobs	
CHECKED	T. Tanaka	

EXAMINED — May 29 1962 — H. E. Bergman, Engineer of Bridge and Traffic Structures
PASSED — Engineer of Design
APPROVED — Chief Highway Engineer

STATE OF ILLINOIS
DEPARTMENT OF PUBLIC WORKS & BUILDINGS
DIVISION OF HIGHWAYS

ROUTE NO.	SECTION	COUNTY	TOTAL SHEETS	SHEET NO.
FAP 10	13-VD	TAZEWELL	34	32
FED. ROAD DIST. NO. 7	ILLINOIS	FED. AID PROJECT		

SHEET NO. 62
65 SHEETS

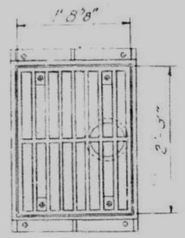

PLAN-FLOOR DRAIN

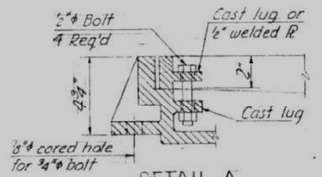

DETAIL A

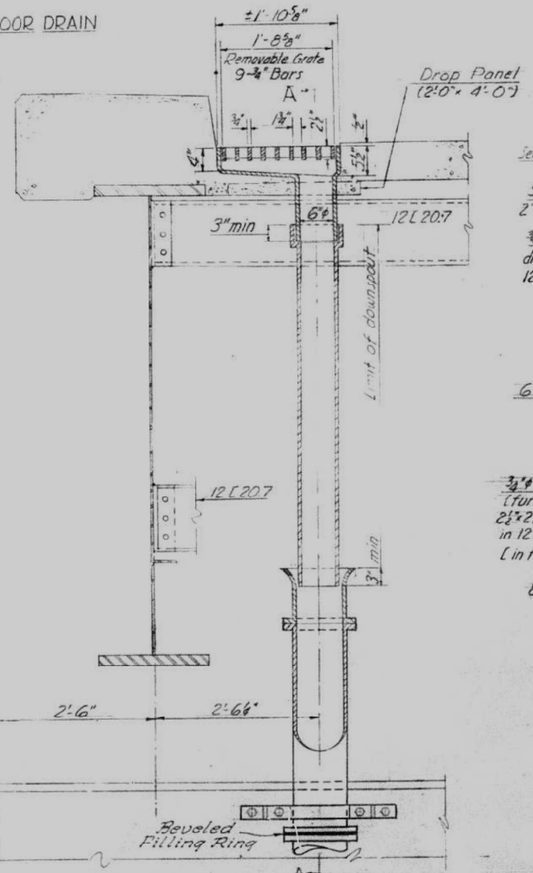

ELEVATION DRAIN ASSEMBLY

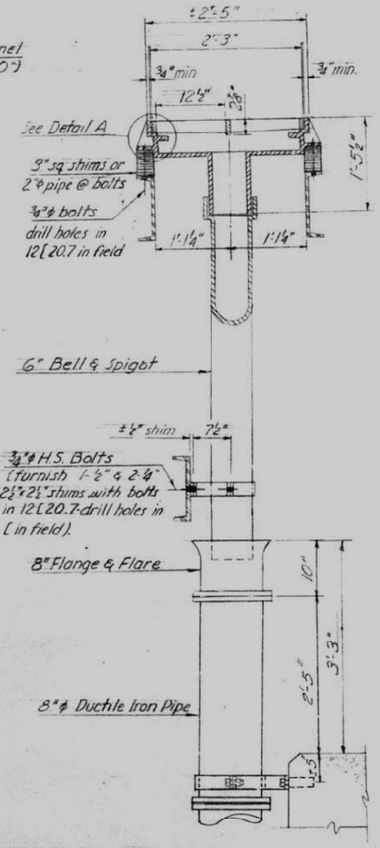

SECTION A-A

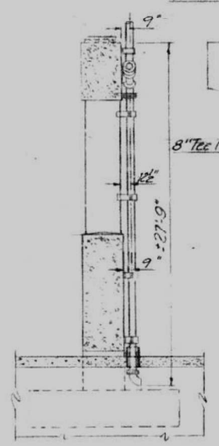

SECTION CC

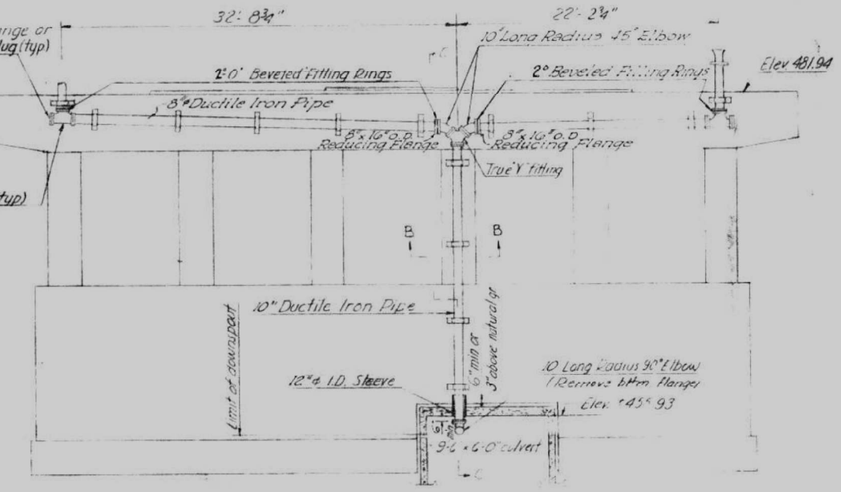

DOWNSPOUT PIPING - SOUTH SIDE PIER 1

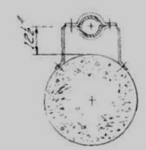

SECTION B-B
See Typical Bracket Details
2 Brackets required

Notes:
Pipe and fittings shall conform to ASTM Designation A 339 (60-45-10) Nodular Iron Castings.
Fittings shall be Class 125 Cast Iron Flanged Fittings shall conform to ASA Std B16.1. Threaded Fittings shall conform to ASA Std B16.12.

For downspouts see Special Provisions.
Brackets and attaching bolts shall be galvanized by the hot dip process. The zinc coating shall conform to ASTM Designation A-153.
Cost of brackets, bolts, expansion anchors & shims shall be incidental to the cost of Cast Iron Downspouts.

Sec. 13 VD
Contractor shall give Downspouts and Brackets two field coats of aluminum paint. Non-leafing aluminum paint shall be used for the first coat. See Articles 56.1 to 56.6 of the Standard Specifications as revised.

BILL OF MATERIAL

Item	Unit	Quantity
*Scuppers	Each	* 2
Cast Iron Downspouts 6"	Lin Ft	13
Cast Iron Downspouts 8"	Lin Ft	64
Cast Iron Downspouts 10"	Lin Ft	25

*Included in Superstructure Bill of Material Sheet *3

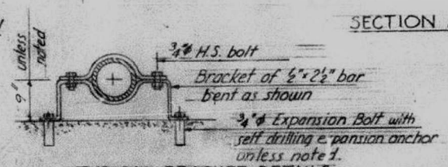

TYPICAL BRACKET DETAILS
14 Brackets req'd - max spacing 8'-0"

DESIGNED	J. B. Ried
CHECKED	James L. Waverung
DRAWN	J. B. R.
CHECKED	James L. Waverung

MAY 29 1962
EXAMINED W. E. Baumann
DIRECTOR OF HIGHWAYS AND TRAFFIC ENGINEERING
PASSED
SUPERVISOR OF BRIDGES
APPROVED
CHIEF HIGHWAY ENGINEER

DRAINAGE DETAILS

CEDAR STREET EXTENSION
F.A. RT. 10 SEC. 13-VD
TAZEWELL COUNTY
STATION 78+28.28

Revised 10/28/61 in Total Bill of Material change Cast Iron Downspouts 192 Lin Ft to Cast Iron Downspouts 6", 8", 10" 13, 64, 125 Respectively J.H.G.

Michael Baker INTERNATIONAL	200 W Adams Street Suite 1800 Chicago, IL 60606 PH: 312.707.8770 FAX: 312.707.8804	USER NAME = DLamb	DESIGNED -	REVISED -
			CHECKED -	REVISED -
		PLOT SCALE = 0:2.0000 ':" / in.	DRAWN -	REVISED -
		PLOT DATE = 5/1/2023	CHECKED -	REVISED -

STATE OF ILLINOIS
DEPARTMENT OF TRANSPORTATION

EXISTING STRUCTURES PLANS

SHEET S-62 OF S-85 SHEETS

F.A.P. RTE.	SECTION	COUNTY	TOTAL SHEETS	SHEET NO.
VAR.	13 (HVB, HB-3) BR-1:R	TAZEWELL	1173	503
		CONTRACT NO. 68C55		
		ILLINOIS	FED. AID PROJECT	

MODEL: Default
FILE NAME: pw:\\mb-us-pw.bentley.com:mb-us-pw-03\Documents\Chicago-IL\01_Projects\179740 IDOT CedarStEx Phll5.0 CADD\CAD_Sheets\ExistingStructurePlans-68C55-062.dgn

STATE OF ILLINOIS
DEPARTMENT OF PUBLIC WORKS & BUILDINGS
DIVISION OF HIGHWAYS

S.B.I. R.R. 10	13-VB	TAZEWELL	49	30	SHEET NO. 63 / 65 SHEETS

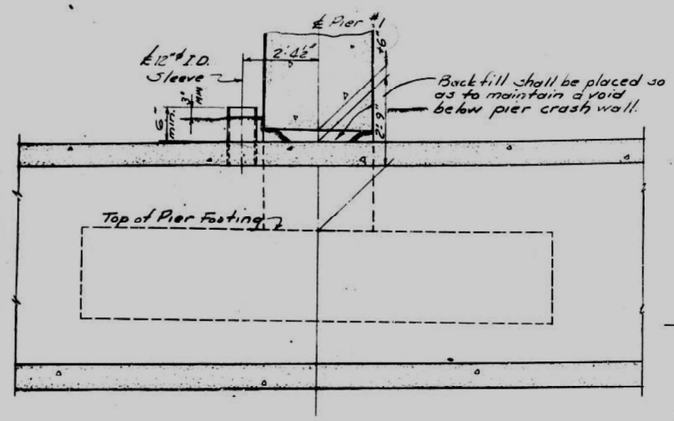

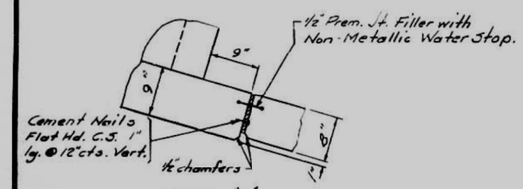

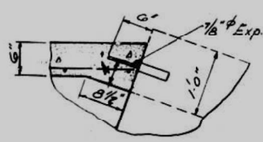

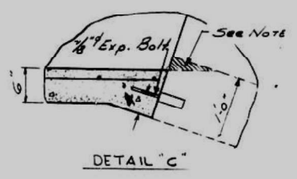

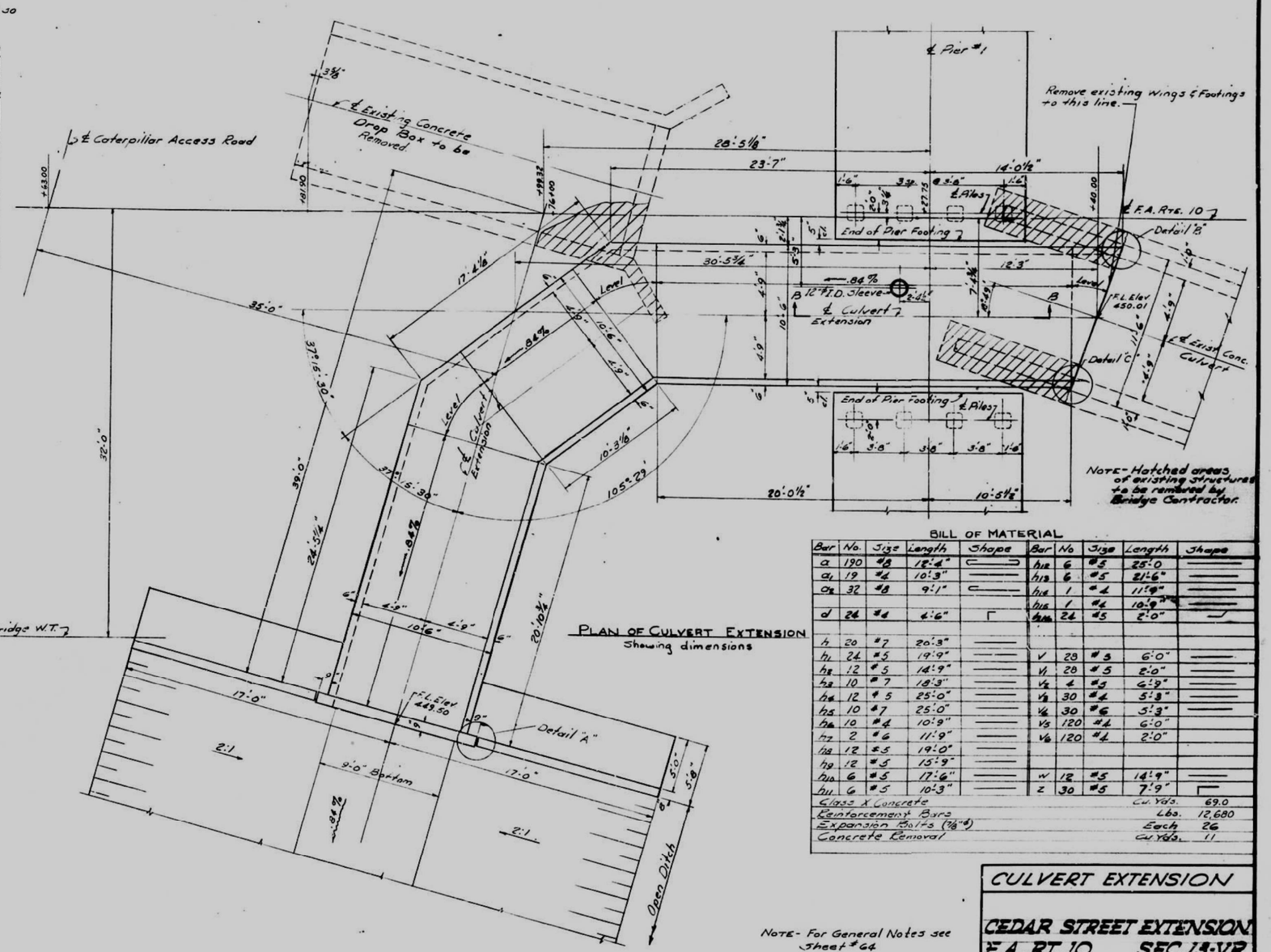

PLAN OF CULVERT EXTENSION
Showing dimensions

NOTE- Hatched areas of existing structures to be removed by Bridge Contractor.

BILL OF MATERIAL

Bar	No.	Size	Length	Shape	Bar	No	Size	Length	Shape
a	190	#8	12'-4"		h_{12}	6	#5	25'-0"	
a_1	19	#4	10'-3"		h_{13}	6	#5	21'-6"	
a_2	32	#8	9'-1"		h_{14}	1	#4	11'-9"	
					h_{15}	1	#4	10'-9"	
d	24	#4	4'-6"		h_{16}	24	#5	2'-0"	
h	20	#7	20'-3"						
h_1	24	#5	19'-9"		v	28	#3	6'-0"	
h_2	12	#5	14'-9"		v_1	28	#5	2'-0"	
h_3	10	#7	18'-3"		v_2	4	#3	6'-3"	
h_4	12	#5	25'-0"		v_3	30	#4	5'-3"	
h_5	10	#7	25'-0"		v_4	30	#6	5'-3"	
h_6	10	#4	10'-9"		v_5	120	#4	6'-0"	
h_7	2	#6	11'-9"		v_6	120	#4	2'-0"	
h_8	12	#5	19'-0"						
h_9	12	#5	15'-9"						
h_{10}	6	#5	17'-6"		w	12	#5	14'-9"	
h_{11}	6	#5	10'-3"		z	30	#5	7'-9"	

Class X Concrete	Cu. Yds.	69.0
Reinforcement Bars	Lbs.	12,680
Expansion Bolts (1/8"ϕ)	Each	26
Concrete Removal	Cu. Yds.	11

NOTE- For General Notes see Sheet #64

DESIGNED	Robert J. Sutter
CHECKED	J.M. Tyanovich
DRAWN	D.F.S.
CHECKED	J.M.J

MAY 29 1962
W.E. Baumann
ENGINEER OF BRIDGES AND STRUCTURES

CULVERT EXTENSION

CEDAR STREET EXTENSION
F.A. RT. 10 SEC. 13-VB
TAZEWELL COUNTY
STATION 78+28.29

Revised 9/13/62: In BILL OF MATERIAL changed Concrete Removal quantity from 10 Cu Yd. to 11 Cu Yd. W.E.B.

STATE OF ILLINOIS
DEPARTMENT OF PUBLIC WORKS & BUILDINGS
DIVISION OF HIGHWAYS

ROUTE NO.	SECTION	COUNTY	TOTAL SHEETS	SHEET NO.
F.A.P. RT. 10	13-VB	TAZEWELL	49	31

SHEET NO. 64 / 65 SHEETS

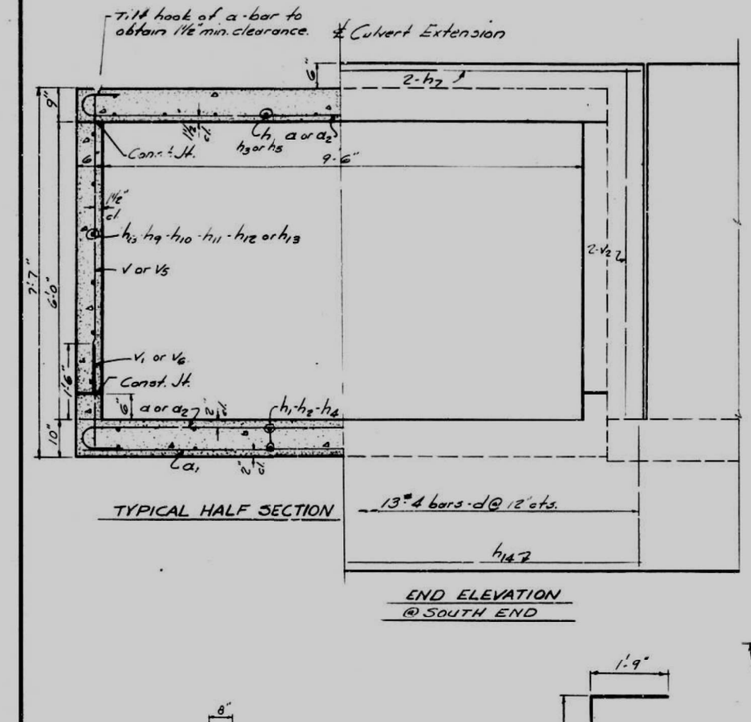

TYPICAL HALF SECTION

END ELEVATION
@ SOUTH END

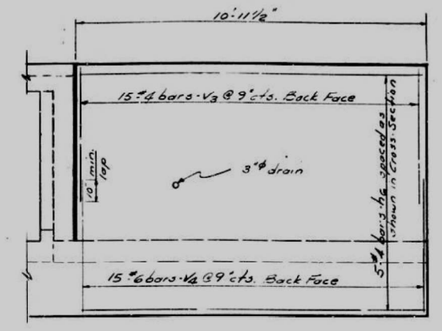

ELEVATION OF WING

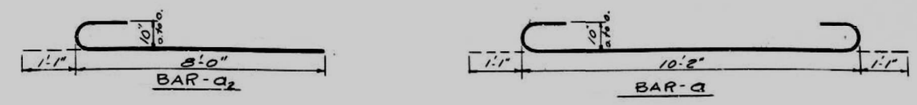

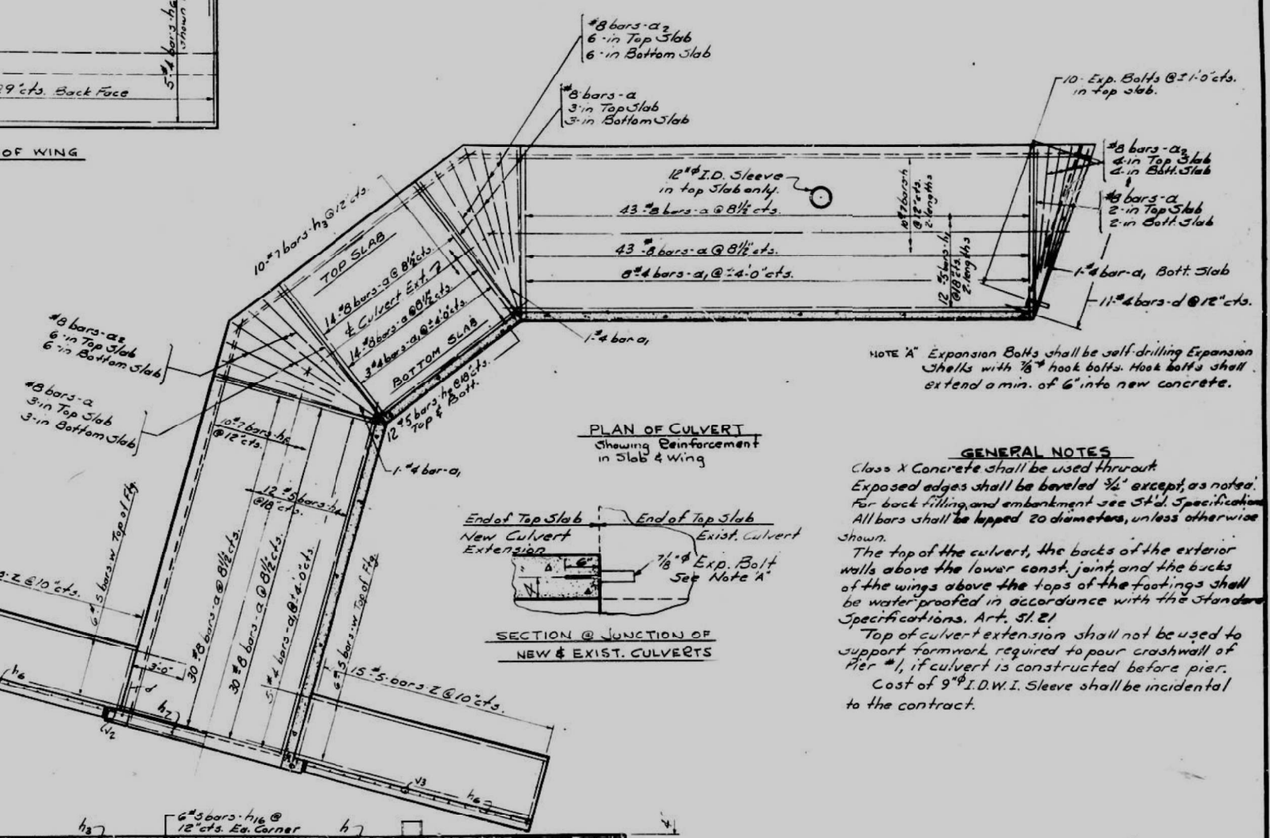

PLAN OF CULVERT
Showing Reinforcement in Slab & Wing

NOTE "A" Expansion Bolts shall be self-drilling Expansion Shells with ⅞"ϕ hook bolts. Hook bolts shall extend a min. of 6" into new concrete.

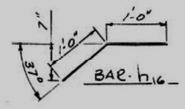

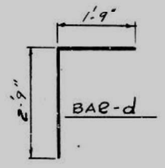

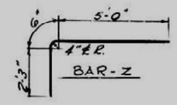

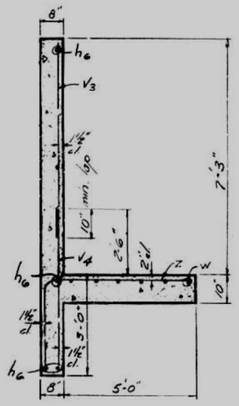

SEC. THRU WING

SECTION @ JUNCTION OF NEW & EXIST. CULVERTS

GENERAL NOTES

Class X Concrete shall be used thruout.
Exposed edges shall be beveled ¾" except, as noted.
For back filling and embankment see Std. Specifications.
All bars shall be lapped 20 diameters, unless otherwise shown.
The top of the culvert, the backs of the exterior walls above the lower const. joint, and the backs of the wings above the tops of the footings shall be water proofed in accordance with the Standard Specifications, Art. 51.21
Top of culvert extension shall not be used to support formwork required to pour crashwall of Pier #1, if culvert is constructed before pier.
Cost of 9"ϕ I.D.W.I. Sleeve shall be incidental to the contract.

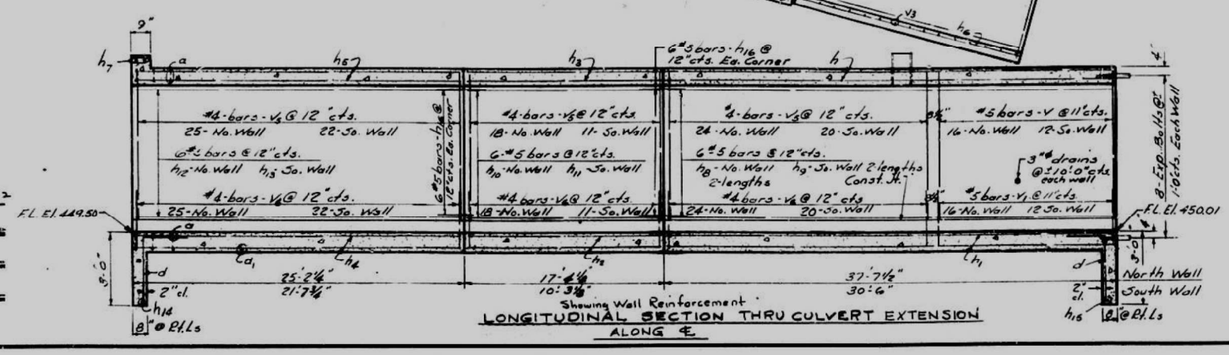

Showing Wall Reinforcement
LONGITUDINAL SECTION THRU CULVERT EXTENSION
ALONG ℄

DESIGNED	Walter Sudgen
CHECKED	J. M. Jgaworth
DRAWN	D.F.S.
CHECKED	J-M-J

EXAMINED — MAY 29 1962 — H. E. Bateman, ENGINEER OF BRIDGE AND TRAFFIC STRUCTURES
PASSED — ENGINEER OF DESIGN
APPROVED — CHIEF HIGHWAY ENGINEER

CULVERT EXTENSION

CEDAR STREET EXTENSION
F.A. RT. 10 SEC. 13-VB
TAZEWELL COUNTY
STATION 78 + 28.29

STATE OF ILLINOIS
DEPARTMENT OF PUBLIC WORKS & BUILDINGS
DIVISION OF HIGHWAYS

ROUTE NO.	SECTION	COUNTY	TOTAL SHEETS	SHEET NO.
F.A.I. 10	13-VB	TAZEWELL	49	32

SHEET NO. 65
65 SHEETS

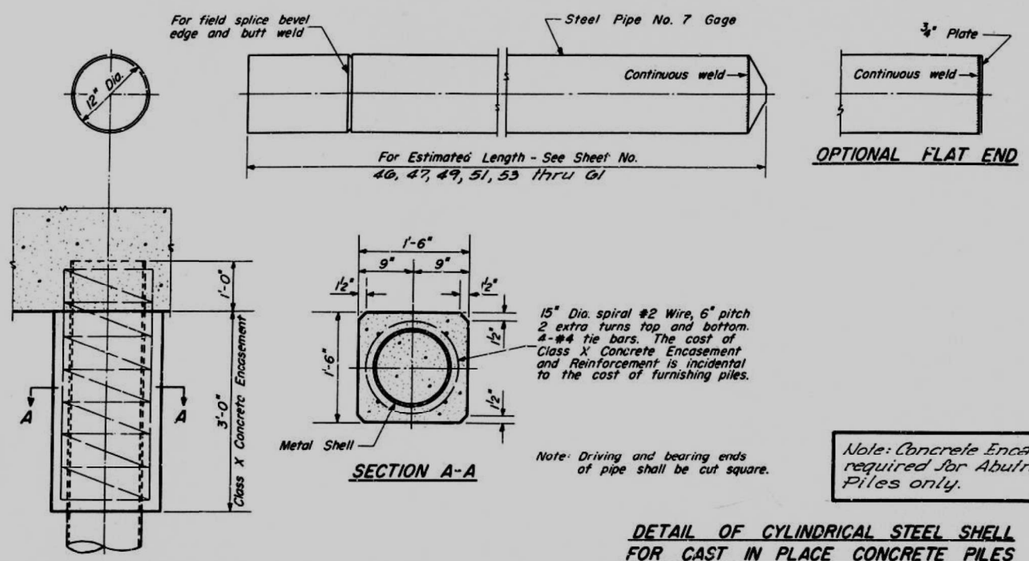

OPTIONAL FLAT END

Note: Concrete Encasement required for Abutment Piles only.

DETAIL OF CYLINDRICAL STEEL SHELL FOR CAST IN PLACE CONCRETE PILES

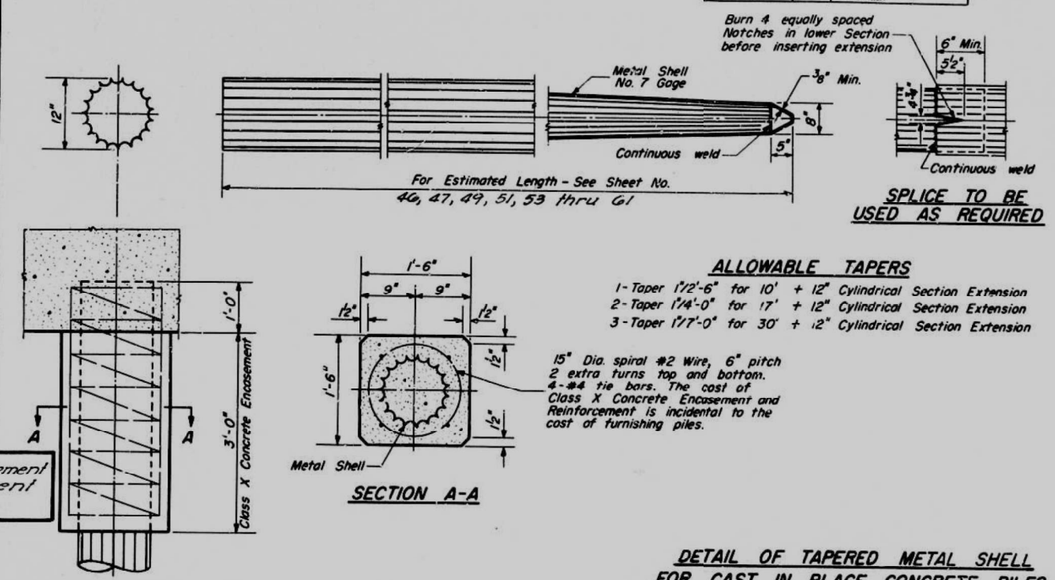

ALLOWABLE TAPERS

1-Taper 1'12'-6" for 10' + 12" Cylindrical Section Extension
2-Taper 1'14'-0" for 17' + 12" Cylindrical Section Extension
3-Taper 1'17'-0" for 30' + 12" Cylindrical Section Extension

DETAIL OF TAPERED METAL SHELL FOR CAST IN PLACE CONCRETE PILES

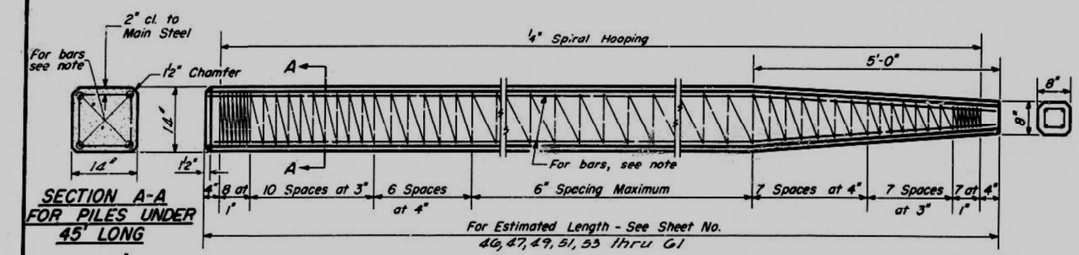

SECTION A-A FOR PILES UNDER 45' LONG

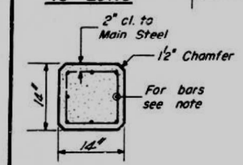

SECTION A-A FOR PILES 45' OR MORE

Note: For 14" Piles 45' long or more use 8-#8 bars 4 for the full length and 4 to the point of bevel.
For 14" Piles under 45' long use 4-#9 bars the full length.

Handling: For Pile lengths up to 45', use two slings placed at a distance of 0.21 L* from each end.
For Piles longer than 45', use three slings placed at a distance of 0.12 L* from each end and at mid-point of pile.
*L = Over all length of pile to be handled.

DESIGNED		EXAMINED	May 29 1962 H. E. Baumann ENGINEER OF BRIDGE AND TRAFFIC STRUCTURES
CHECKED		PASSED	ENGINEER OF DESIGN
DRAWN	W. A. Sausaman	APPROVED	CHIEF HIGHWAY ENGINEER
CHECKED			

X-1 Rev. 5-12-61

DETAIL OF PRECAST CONCRETE PILES

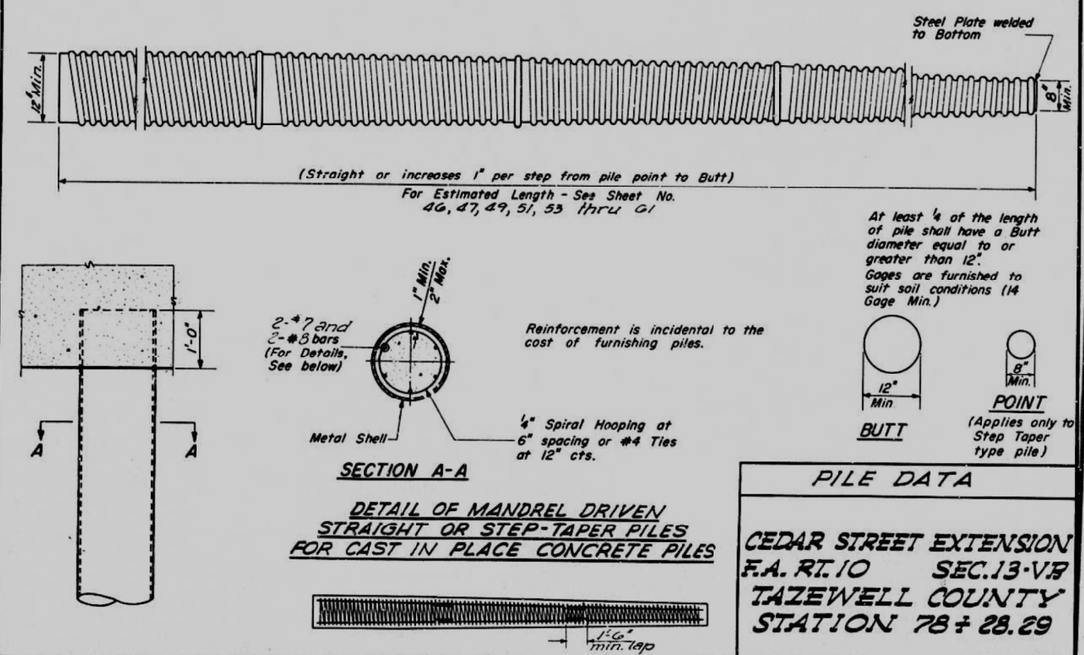

Reinforcement is incidental to the cost of furnishing piles.

At least ¼ of the length of pile shall have a Butt diameter equal to or greater than 12".
Gages are furnished to suit soil conditions (14 Gage Min.)

BUTT

POINT
(Applies only to Step Taper type pile)

DETAIL OF MANDREL DRIVEN STRAIGHT OR STEP-TAPER PILES FOR CAST IN PLACE CONCRETE PILES

PILE DATA

CEDAR STREET EXTENSION
F.A. RT. 10 SEC. 13-VB
TAZEWELL COUNTY
STATION 78 + 28.29

MODEL: Default
FILE NAME: pw:\\mbsi-sv-pw.bentley.com:mbsi-pw-03\Documents\Chicago IL\01 Projects\179740 IDOT Cedar Street Phase 1 CADD\CAD Sheets\ExistingStructurePlan-68C55-085.dgn

Michael Baker INTERNATIONAL
200 W Adams Street
Suite 1500
Chicago, IL 60606
Ph: 312.707.8770
FAX: 312.707.8804

USER NAME = DLamb	DESIGNED -	REVISED -
	CHECKED -	REVISED -
PLOT SCALE = 0:2.0000 ':" / in.	DRAWN -	REVISED -
PLOT DATE = 5/1/2023	CHECKED -	REVISED -

STATE OF ILLINOIS
DEPARTMENT OF TRANSPORTATION

EXISTING STRUCTURES PLANS

SHEET S-65 OF S-85 SHEETS

F.A.P. RTE.	SECTION	COUNTY	TOTAL SHEETS	SHEET NO.
VAR.	13 (HVB, HB-3) BR-1;R	TAZEWELL	1173	506

CONTRACT NO. 68C55

ILLINOIS | FED. AID PROJECT

ROUTE No.	SEC.	COUNTY	TOTAL SHEETS	SHEET NO.
FA 10	13 HB-3	TAZEWELL	50	3
STA. 75 + 00		TO STA 87 + 00		
FED. ROAD DIST. No. 7	ILLINOIS	PROJECT		

PROFILE — SUBMITTED: R. WHITE; ALIGNMENT CHECKED: R.W.; STRUCTURE DETAILS CHKD: — BY: — DATE: 5/18/23

PLAN — SUBMITTED: ALIGNMENT CHECKED: BY: BY WAY CHECKED: — BY: — DATE:

Printed in U.S.A. On ABWRIGHT Trading Cloth

PLATE 1 PLAN - PROFILE B P R STANDARD

MODEL: Default
FILE NAME: pw:\\mbi-ipw.bakerlaw.com\mbi-ipw-03\Documents\Chicago_IL\01 Projects\179740 IDOT Cedar\SE\x1 PhII\5.0 CADD\CAD Sheets\ExistingStructureRun-68C55-066.dgn

Michael Baker INTERNATIONAL 200 W Adams Street Suite 1800 Chicago, IL 60606 PH: 312.707.8775 FAX: 312.707.8804	USER NAME = DLamb	DESIGNED -	REVISED -
		CHECKED -	REVISED -
	PLOT SCALE = 0.1667 ' / in.	DRAWN -	REVISED -
	PLOT DATE = 5/1/2023	CHECKED -	REVISED -

STATE OF ILLINOIS
DEPARTMENT OF TRANSPORTATION

EXISTING STRUCTURES PLANS

SHEET S-66 OF S-85 SHEETS

F.A.P. RTE.	SECTION	COUNTY	TOTAL SHEETS	SHEET NO.
VAR.	13 (HVB, HB-3) BR-1;R	TAZEWELL	1173	507
		CONTRACT NO. 68C55		
		ILLINOIS	FED. AID PROJECT	

ROUTE No.	SEC.	COUNTY	TOTAL SHEETS	SHEET NO.
F.A. 10	13-HB-3	TAZEWELL	50	4
STA. 95+00		TO STA. 110+00		
FED. ROAD DIST. No. 7	ILLINOIS	PROJECT	( )	

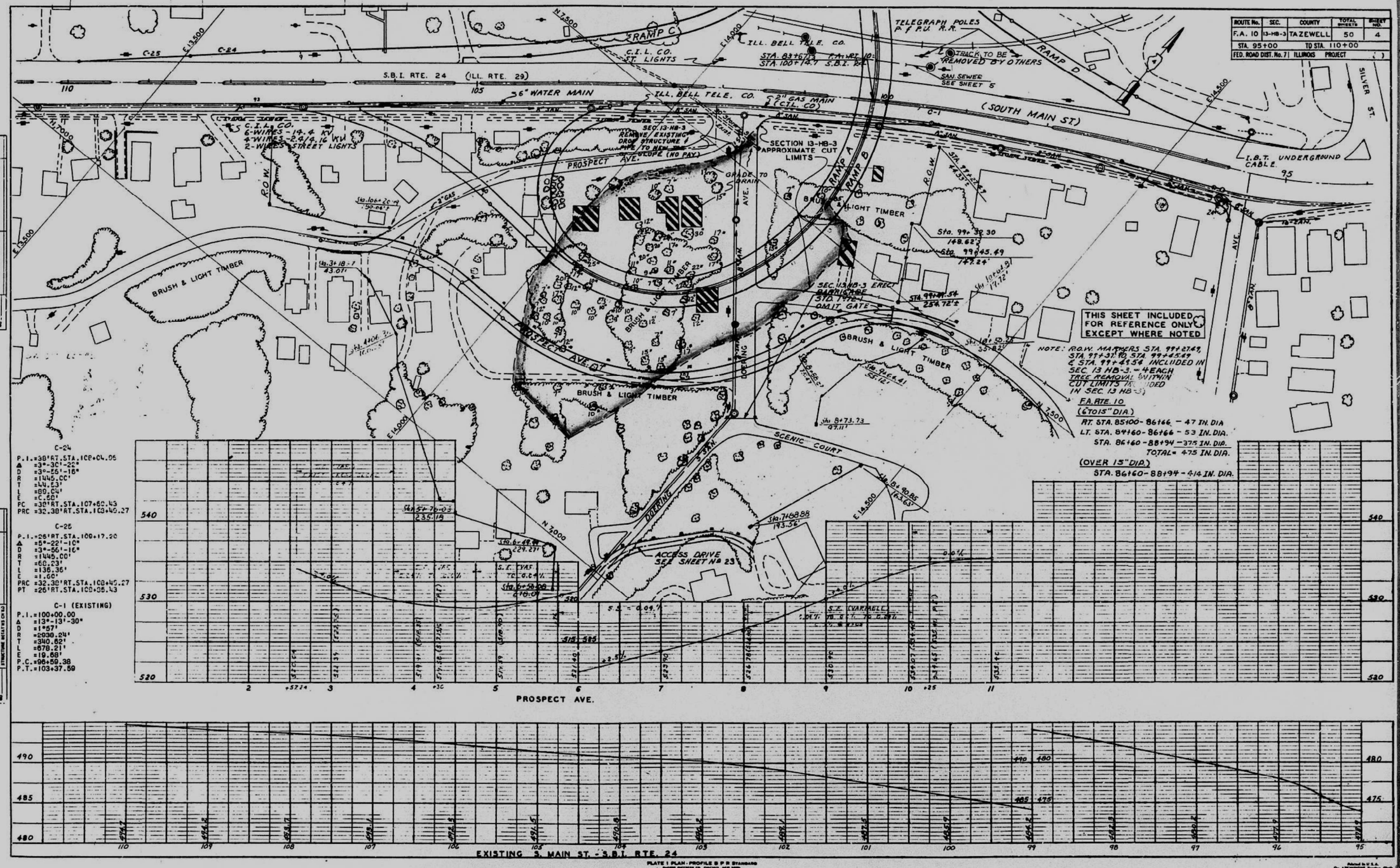

PLATE 1 PLAN - PROFILE B P R STANDARD

USER NAME = DLamb	DESIGNED -	REVISED -	
	CHECKED -	REVISED -	
PLOT SCALE = 0:2.0000 ':" / in.	DRAWN -	REVISED -	
PLOT DATE = 5/1/2023	CHECKED -	REVISED -	

Michael Baker INTERNATIONAL
200 W Adams Street Suite 1800 Chicago, IL 60606 PH: 312.707.8770 FAX: 312.707.8804

STATE OF ILLINOIS
DEPARTMENT OF TRANSPORTATION

EXISTING STRUCTURES PLANS

SHEET S-67 OF S-85 SHEETS

F.A.P. RTE.	SECTION	COUNTY	TOTAL SHEETS	SHEET NO.
VAR.	13 (HVB, HB-3) BR-1;R	TAZEWELL	1173	508
		CONTRACT NO. 68C55		
		ILLINOIS	FED. AID PROJECT	

MODEL: Default
FILE NAME: pw:\\mo-i-s-pw.bentley.com:mb-i-s-pw-03\Documents\Chicago IL\61 Projects\179740 IDOT Cedar\SE\ai Phillis.5.0 CADD\CAD Sheets\ExistingStructurePlans=68C55=067.dgn

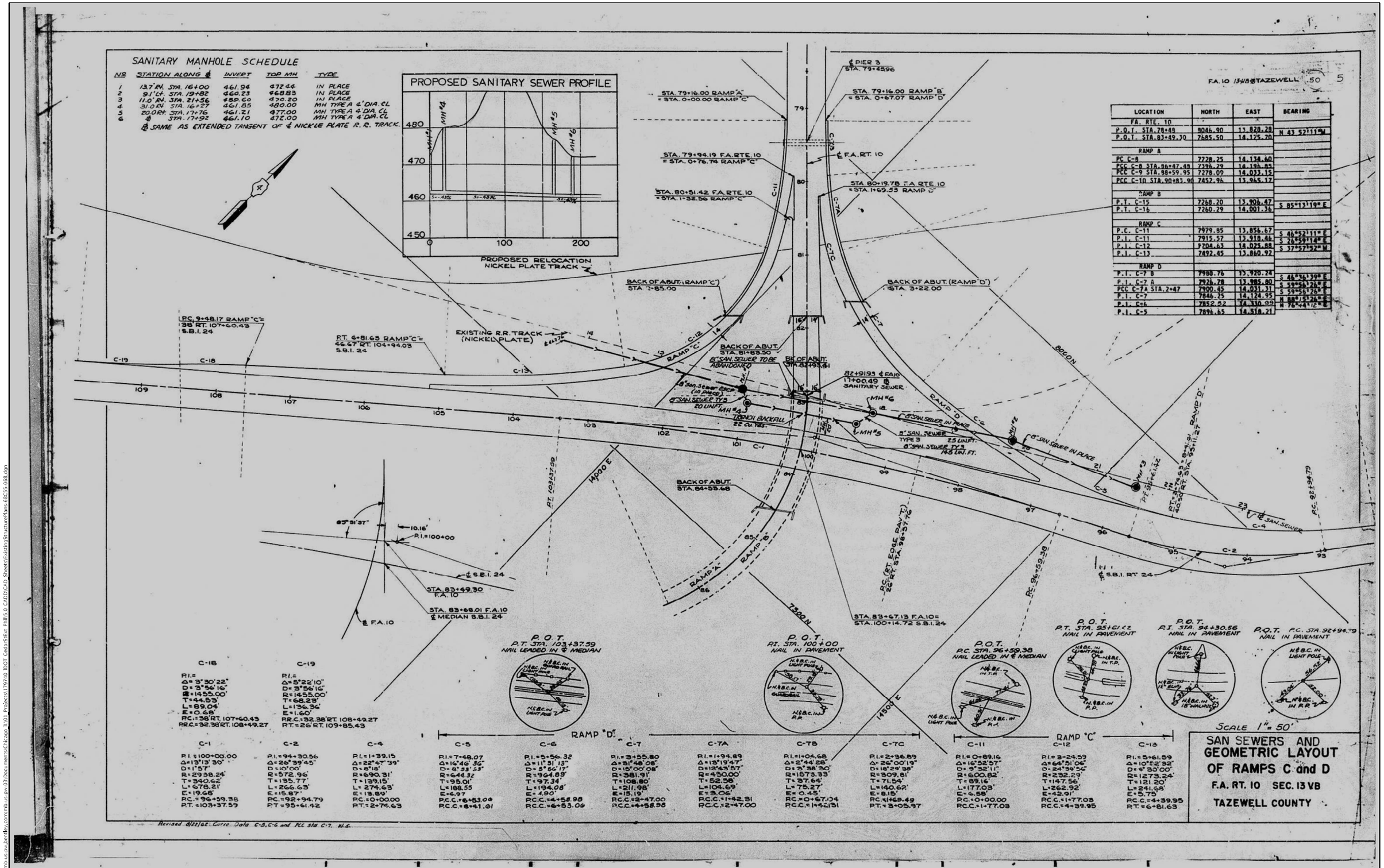

LOCATION	NORTH	EAST	BEARING
FA. RTE. 10			
P.O.T. STA. 78+49	9046.90	13,828.28	N 43°52'11" W
P.O.T. STA. 83+49.30	7685.50	14,125.20	
RAMP A			
PC C-8	7728.25	14,138.60	
PCC C-8 STA. 86+47.48	7396.29	14,196.85	
PCC C-9 STA. 98+59.95	7278.09	14,033.15	
PCC C-10 STA. 90+83.90	7452.96	13,965.17	
RAMP B			
P.T. C-15	7268.20	13,906.47	S 85°13'19" E
P.T. C-16	7260.29	14,001.36	
RAMP C			
P.C. C-11	7979.85	13,856.67	S 46°52'11" E
P.I. C-11	7915.57	13,918.46	S 26°59'14" E
P.I. C-12	7204.63	14,025.88	S 37°57'52" W
P.I. C-13	7492.45	13,860.92	
RAMP D			
P.T. C-7 B	7988.76	13,920.24	S 46°46'39" E
P.I. C-7 A	7926.78	13,985.80	S 59°56'26" E
PCC C-7A STA. 2+47	7900.45	14,031.31	S 59°56'26" E
P.I. C-7	7846.25	14,124.95	N 88°15'26" E
P.I. C-6	7852.52	14,330.99	N 76°41'12" E
P.I. C-5	7896.65	14,518.21	

Michael Baker INTERNATIONAL 200 W Adams Street Suite 1800 Chicago, IL 60606 Ph: 312.707.8770 FAX: 312.707.8804	USER NAME = DLamb	DESIGNED -	REVISED -	STATE OF ILLINOIS DEPARTMENT OF TRANSPORTATION	EXISTING STRUCTURES PLANS	F.A.P. RTE.	SECTION	COUNTY	TOTAL SHEETS	SHEET NO.
		CHECKED -	REVISED -			VAR.	13 (HVB, HB-3) BR-1;R	TAZEWELL	1173	509
	PLOT SCALE = 0:2,0000 ':" / in.	DRAWN -	REVISED -					CONTRACT NO. 68C55		
	PLOT DATE = 5/1/2023	CHECKED -	REVISED -		SHEET S-68 OF S-85 SHEETS		ILLINOIS	FED. AID PROJECT		

MODEL: Default
FILE NAME: pw:\\mwi-is-pw.bentley.com:mbi-is-pw-03\Documents\Chicago_IL\01 Projects\179740 IDOT Cedar\SEK1 PHII\5.0 CADD\CAD Sheets\ExistingStructurePlan-68C55-068.dgn

ROUTE No.	SEC.	COUNTY	TOTAL SHEETS	SHEET NO.
F.A. 10	13-HB-3	TAZEWELL	50	2
FED. ROAD DIST. No. 7	ILLINOIS	PROJECT	( )	

SUMMARY OF QUANTITIES

QUANTITY	UNIT	ITEM	CODE
475	IN. DIA.	TREE REMOVAL (6 TO 15 INCH DIAMETER)	010001
414	IN. DIA.	TREE REMOVAL (OVER 15 INCH DIAMETER)	010002
70,652	CU. YD.	EARTH EXCAVATION	011001
421	CU. YD.	TRENCH BACKFILL	020001
79	TON	GRAVEL OR CRUSHED STONE SURFACE COURSE, TYPE A	036001
6.8	CU. YD.	CONCRETE REMOVAL	049003
25	EACH	EXPANSION BOLTS 7/8 INCH	049006
176	CU. YD.	CLASS A EXCAVATION FOR STRUCTURES	050001
594.3	CU. YD.	CLASS X CONCRETE	052003
941	SQ. YD.	PROTECTIVE COAT	052061
241,330	POUND	FURNISHING AND ERECTING STRUCTURAL STEEL	054001
62	LIN. FT.	PIPE CULVERTS, TYPE 2, 24"	058225
86,320	POUND	REINFORCEMENT BARS	059001
135	LIN. FT.	FURNISHING CREOSOTED PILES UP TO 20'	060004
900	LIN. FT.	FURNISHING CREOSOTED PILES, 20.1 TO 38 FT.	060005
1	EACH	TEST PILE TIMBER	060007
1,035	LIN. FT.	DRIVING TIMBER PILES	060008
980	LIN. FT.	DRIVING CONCRETE PILES	060043
980	LIN. FT.	FURNISHING CONCRETE PILES	060044
2	EACH	TEST PILE CONCRETE	060047
1	EACH	NAME PLATES	061001
28	LIN. FT.	CORRUGATED METAL PIPE, 12"	063003
8	EACH	MANHOLES, TYPE A, 4' DIAMETER, TYPE 1 FRAME, CLOSED LID	075081
1	EACH	INLETS, TYPE A, TYPE 10 FRAME	075105
2	EACH	MANHOLES, DROP TYPE, 4' DIAMETER, TYPE 1 FRAME, CLOSED LID	075341
225	LIN. FT.	CONCRETE GUTTER, TYPE B	080003
461	SQ. YD.	SLOPE WALL, 4 INCH	083002
512	SQ. YD.	PAVEMENT REPLACEMENT - ENTIRE	094007
157	LIN. FT.	PAVED DITCH, 8 FEET	091007
200	LIN. FT.	STEEL PLATE BEAM GUARD RAIL	094001
10	EACH	FURNISHING AND ERECTING RIGHT OF WAY MARKERS	104001
4.1	ACRE	COMPLETE SEEDING	110004
0.3	TON	FERTILIZER NUTRIENTS	110005
8	TON	STRAW FOR ASPHALT-COATED MULCH	111002
800	GAL.	EMULSIFIED ASPHALT	111003
372	SQ. YD.	SODDING	112001
316	LIN. FT.	ALUMINUM HANDRAIL	Z00004
342	LIN. FT.	SANITARY SEWER, 6"	Z00216
1,532	LIN. FT.	SANITARY SEWER, TYPE 2, 8"	Z00217
180	LIN. FT.	SANITARY SEWER, TYPE 3, 8"	Z01063
1,576	CU. YD.	DUMP REMOVAL	Z01053
1	L. SUM	RAILROAD PROTECTIVE SERVICES	Z01065

HIGHWAY CLASSIFICATION

3172 - T - 50 - 1983 (POSTED 35 MPH)
MAXIMUM GRADE: 4.00%
LENGTH OF MAXIMUM GRADE: 339.02 FEET
MINIMUM SIGHT DISTANCE (STOPPING): 552 FEET
MINIMUM HORIZONTAL RADIUS: 308 FEET

GENERAL NOTES

1. BUILDINGS SHOWN ON PLANS BY BROAD SHADED BANDS ARE TO BE REMOVED BY OTHERS
2. TWO (2) SIGNS CONFORMING TO STD. 2158-1 SHALL BE ERECTED AT LOCATIONS AS SHOWN ON SHT. 3.
3. WHENEVER IN THESE PLANS REFERENCE IS MADE TO THE "STANDARD SPECIFICATIONS", IT IS UNDERSTOOD TO INCLUDE THE "SUPPLEMENTAL SPECIFICATIONS", EFFECTIVE APRIL 2, 1962.

QUANTITIES NOT SHOWN ELSEWHERE ON PLANS

COMPLETE SEEDING
Entire Job — 4.1 Acres

FERTILIZER NUTRIENTS
A. Seeding = $\frac{4.1 \times 160}{2000}$ = 0.328 Ton
B. Sodding = $\frac{372 \times 9 \times 160}{43{,}560 \times 2000}$ = 0.006 Ton
TOTAL = 0.334 Ton

STRAW FOR ASPHALT COATED MULCH
2 Ton/Acre X 4 Acre = 8 Ton

EMULSIFIED ASPHALT
100 Gals./Ton of Straw X 8 = 800 Gals

SODDING
Abutments of Grade Separation — 372 Sq. Yds.

INDEX OF SHEETS

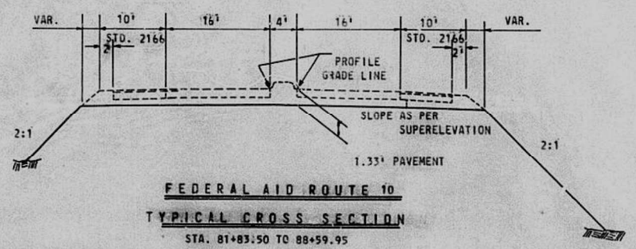

FEDERAL AID ROUTE 10
TYPICAL CROSS SECTION
STA. 81+83.50 TO 88+59.95

SUBMITTED Jan. 23, 1962
C. Daville
DISTRICT DESIGN ENGINEER

EXAMINED
DISTRICT CONSTRUCTION ENGINEER

EXAMINED JAN. 26, 1962
R. E. Scribner
DISTRICT MAINTENANCE ENGINEER

EXAMINED 26 JAN. 62
A.G. Litwiler
DISTRICT TRAFFIC ENGINEER

ENTIRE SECTION INSPECTED AND APPROVED AS TO POLICY
DATE March 7 1962
Don Curtis
DISTRICT ENGINEER

Revised 4/1/62 Quantity of Reinf. Bars chgd. from 82,980 to 86,270 J.E.C.
Added item Protective coat

Michael Baker INTERNATIONAL 200 W Adams Street Suite 1800 Chicago, IL 60606 PH: 312.707.8770 FAX: 312.707.8804	USER NAME = DLamb	DESIGNED -	REVISED -
		CHECKED -	REVISED -
	PLOT SCALE = 0:2.0000 ':" / in.	DRAWN -	REVISED -
	PLOT DATE = 5/1/2023	CHECKED -	REVISED -

STATE OF ILLINOIS
DEPARTMENT OF TRANSPORTATION

EXISTING STRUCTURES PLANS

SHEET S-69 OF S-85 SHEETS

F.A.P. RTE.	SECTION	COUNTY	TOTAL SHEETS	SHEET NO.
VAR.	13 (HVB, HB-3) BR-1;R	TAZEWELL	1173	510
		CONTRACT NO. 68C55		
	ILLINOIS	FED. AID PROJECT		

MODEL: Default
FILE NAME: pw:\\mba-us-pw.bentley.com:mb-us-pw-03\Documents\Chicago IL\01 Projects\179740 IDOT CedarStreet Phase 5.0 CADD\CAD Sheets\ExistingStructure\Ram-s68C55-069.dgn

STATE OF ILLINOIS
DEPARTMENT OF PUBLIC WORKS & BUILDINGS
DIVISION OF HIGHWAYS

ROUTE NO.	SECTION	COUNTY	TOTAL SHEETS	SHEET NO.
F.A.P. 10	13-V (F,F)	TAZEWELL	25	15
FED. ROAD DIST. NO. 7	ILLINOIS	FED. AID PROJECT-		

SHEET NO. 30
65 SHEETS

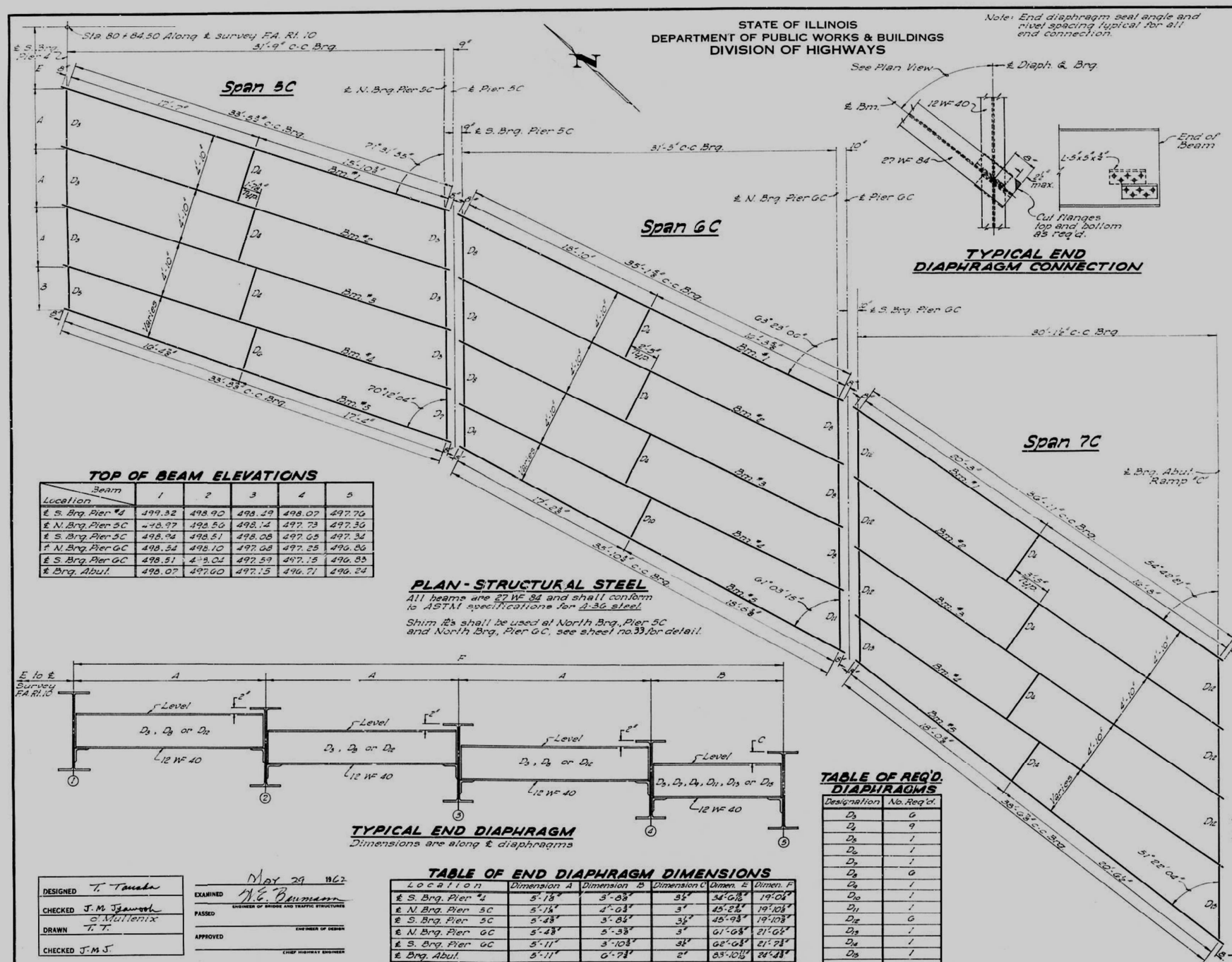

TYPICAL END DIAPHRAGM CONNECTION

DIAPHRAGMS D4 D6 D10 & D14

SEC. AT PIERS 5C, 6C AND ABUTMENT

SEC. AT ℄ S. BRG. PIER 4
Unless noted

TOP OF BEAM ELEVATIONS

Location \ Beam	1	2	3	4	5
℄ S. Brg. Pier #4	499.32	498.90	498.49	498.07	497.76
℄ N. Brg. Pier 5C	498.97	498.56	498.14	497.73	497.36
℄ S. Brg. Pier 5C	498.94	498.51	498.08	497.65	497.34
℄ N. Brg. Pier 6C	498.54	498.10	497.68	497.25	496.86
℄ S. Brg. Pier 6C	498.51	498.04	497.59	497.15	496.88
℄ Brg. Abut.	498.07	497.60	497.15	496.71	496.24

PLAN - STRUCTURAL STEEL

All beams are 27 WF 84 and shall conform to ASTM specifications for A-36 steel.

Shim #2's shall be used at North Brg., Pier 5C and North Brg., Pier 6C, see sheet no. 33 for detail.

TYPICAL END DIAPHRAGM
Dimensions are along ℄ diaphragms

TABLE OF REQ'D. DIAPHRAGMS

Designation	No. Req'd.
D3	6
D4	9
D5	1
D6	1
D7	1
D8	6
D9	1
D10	1
D11	1
D12	6
D13	1
D14	1
D15	1

TABLE OF END DIAPHRAGM DIMENSIONS

Location	Dimension A	Dimension B	Dimension C	Dimen. E	Dimen. F
℄ S. Brg. Pier #4	5'-1 7/8"	3'-8 3/8"	3 1/2"	34'-6 1/2"	19'-0 1/4"
℄ N. Brg. Pier 5C	5'-1 1/4"	4'-0 3/8"	3"	45'-2 1/2"	19'-10 1/8"
℄ S. Brg. Pier 5C	5'-4 3/8"	3'-8 1/4"	3 1/2"	45'-9 3/8"	19'-10 3/8"
℄ N. Brg. Pier 6C	5'-4 3/8"	5'-3 3/8"	3"	61'-6 3/8"	21'-6 1/2"
℄ S. Brg. Pier 6C	5'-11"	3'-10 3/8"	3 1/2"	62'-6 3/8"	21'-7 3/8"
℄ Brg. Abut.	5'-11"	6'-7 3/8"	2"	83'-10 1/2"	24'-4 3/8"

BILL OF MATERIAL

Item	Unit	Quantity
* Structural Steel	Lbs.	62,770

*Weight of Bearing Assemblies (including Lead Plates, Shims & Anchor Bolts) and Open Joint Expansion Device Angles only are included as Structural Steel. Est. wt. = 7,800 lbs.

DESIGNED	T. Tanaka	
CHECKED	J. M. Jgawoch	
	O'Mullenix	
DRAWN	T. T.	
CHECKED	J. M. J.	

May 29 1962
EXAMINED N. E. Baumann
ENGINEER OF BRIDGE AND TRAFFIC STRUCTURES
PASSED
ENGINEER OF DESIGN
APPROVED
CHIEF HIGHWAY ENGINEER

STRUCTURAL STEEL-RAMP C

CEDAR STREET EXTENSION
F.A.RT. 10 SEC. 13-V(F,F,P)
TAZEWELL COUNTY
STATION 78+28.29

MODEL: Default
FILE NAME: pw://mbi-i-s-pw.bentley.com:mbi-i-s-pw-03/Documents/Chicago IL(1) Projects\179740 IDOT Cedar\SIEX PRTS\S.0 CADD\CAD Sheets\ExistingStructurePlan-68C55-070.dgn

Michael Baker INTERNATIONAL
200 W Adams Street
Suite 1850
Chicago, IL 60606
PH: 312.707.8770
FAX: 312.707.8804

USER NAME = DLamb	DESIGNED -	REVISED -	
	CHECKED -	REVISED -	
PLOT SCALE = 0:2.0000 ':" / in.	DRAWN -	REVISED -	
PLOT DATE = 5/1/2023	CHECKED -	REVISED -	

STATE OF ILLINOIS
DEPARTMENT OF TRANSPORTATION

EXISTING STRUCTURES PLANS

SHEET S-70 OF S-85 SHEETS

F.A.P. RTE.	SECTION	COUNTY	TOTAL SHEETS	SHEET NO.
VAR.	13 (HVB, HB-3) BR-1;R	TAZEWELL	1173	511
		CONTRACT NO. 68C55		
		ILLINOIS	FED. AID PROJECT	

ROUTE No.	SEC.	COUNTY	TOTAL SHEETS	SHEET NO.
F.A.1	13-HB-3	TAZEWELL	50	9
STA. 22+00		TO STA. 26+39.86		
FED. ROAD DIST. No. 7	ILLINOIS	PROJECT		( )

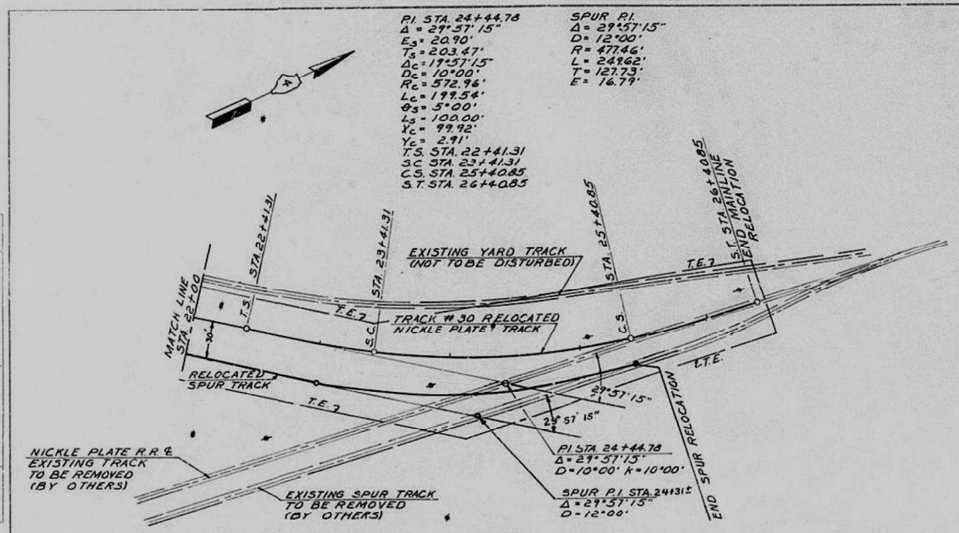

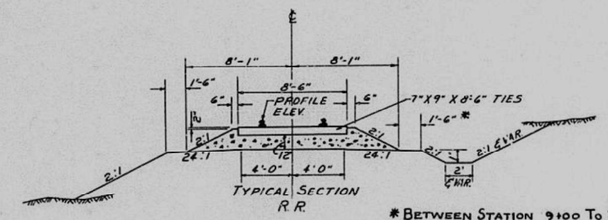

TYPICAL SECTION R.R.

* BETWEEN STATION 9+00 TO STATION 13+40 TO BE 3'-11"

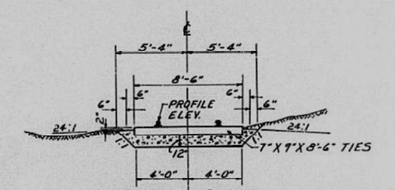

SPECIAL CUT SECTION

NOTE: THIS SECTION TO BE USED WHERE NOT POSSIBLE TO OUTLET DITCH SHOWN ON TYPICAL SECTION AND WHERE TYING INTO EXISTING ROADBED.

ALL CONSTRUCTION ON THIS SHEET TO BE UNDER SECTION 13 HB-3 EXCEPT REMOVING EXISTING TRACK & CONSTRUCTING RELOCATED TRACK & BALLAST TO BE DONE BY RAILROAD.

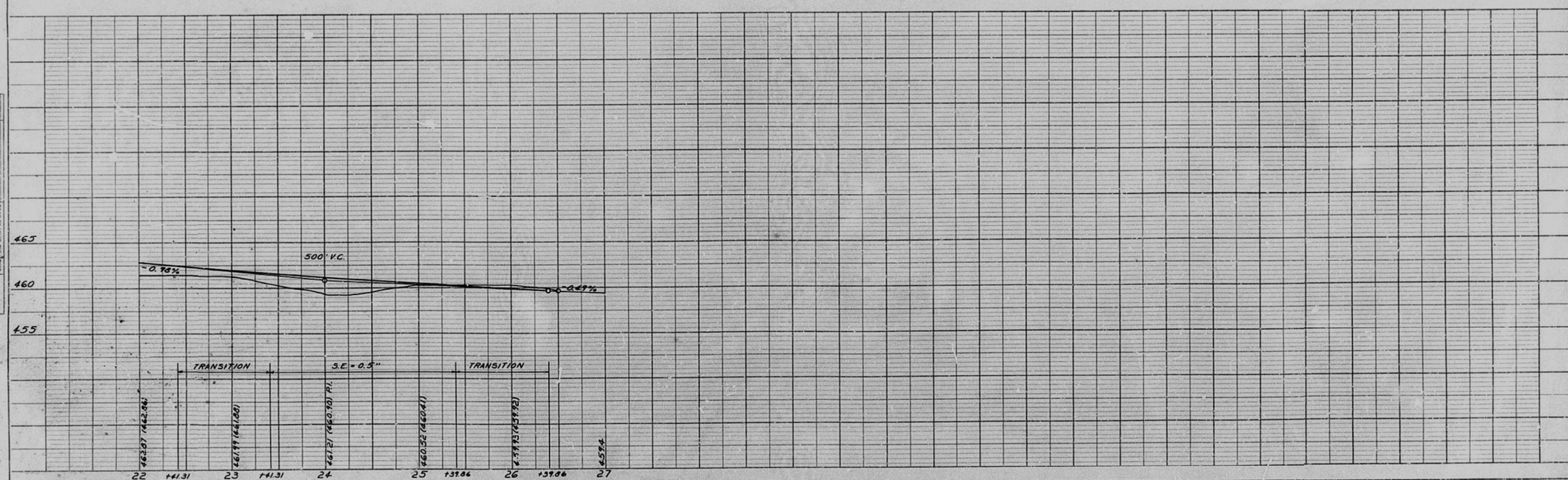

PROFILE — SURVEYED / PLOTTED / NOTE BOOK / NO. / CHECKED / B.M. NOTED / STRUCTURE NOTE (ON RT.) / BY / DATE

FLAN — SURVEYED / PLOTTED / NOTE BOOK / NO. / ALIGNMENT CHECKED / RT OF WAY CHECKED / BY / DATE

PLATE 1 PLAN-PROFILE B.P.R. STANDARD

Printed in U.S.A. On ARCHWRIGHT Tracing Cloth

MODEL: Default
FILE NAME: pw:\\mb-us-pw.bentley.com:mb-us-pw-33\Documents\Chicago-IL\01 Projects\179740 IDOT Cedar-SIExt Phll5.0 CADD\CAD Sheets\ExistingStructurePlans-68C55-071.dgn

Michael Baker INTERNATIONAL — 200 W Adams Street, Suite 1800, Chicago, IL 60606, PH: 312.707.8770, FAX: 312.707.8804	USER NAME = DLamb	DESIGNED -	REVISED -	STATE OF ILLINOIS DEPARTMENT OF TRANSPORTATION	EXISTING STRUCTURES PLANS
		CHECKED -	REVISED -		
	PLOT SCALE = 0.1667 ' / in.	DRAWN -	REVISED -		
	PLOT DATE = 5/1/2023	CHECKED -	REVISED -		SHEET S-71 OF S-85 SHEETS

F.A.P. RTE.	SECTION	COUNTY	TOTAL SHEETS	SHEET NO.
VAR.	13 (HVB, HB-3) BR-1:R	TAZEWELL	1173	512
		CONTRACT NO. 68C55		
		ILLINOIS	FED. AID PROJECT	

STATE OF ILLINOIS
DEPARTMENT OF PUBLIC WORKS & BUILDINGS
DIVISION OF HIGHWAYS

ROUTE NO.	SEC.	COUNTY	TOT. SHEETS	SHEET NO.
F.A. 10	13 HB-3	TAZEWELL	50	11
FED. ROAD DIST. No. 7	ILLINOIS	PROJECT U-131 (25)		

SH. 1 OF 12

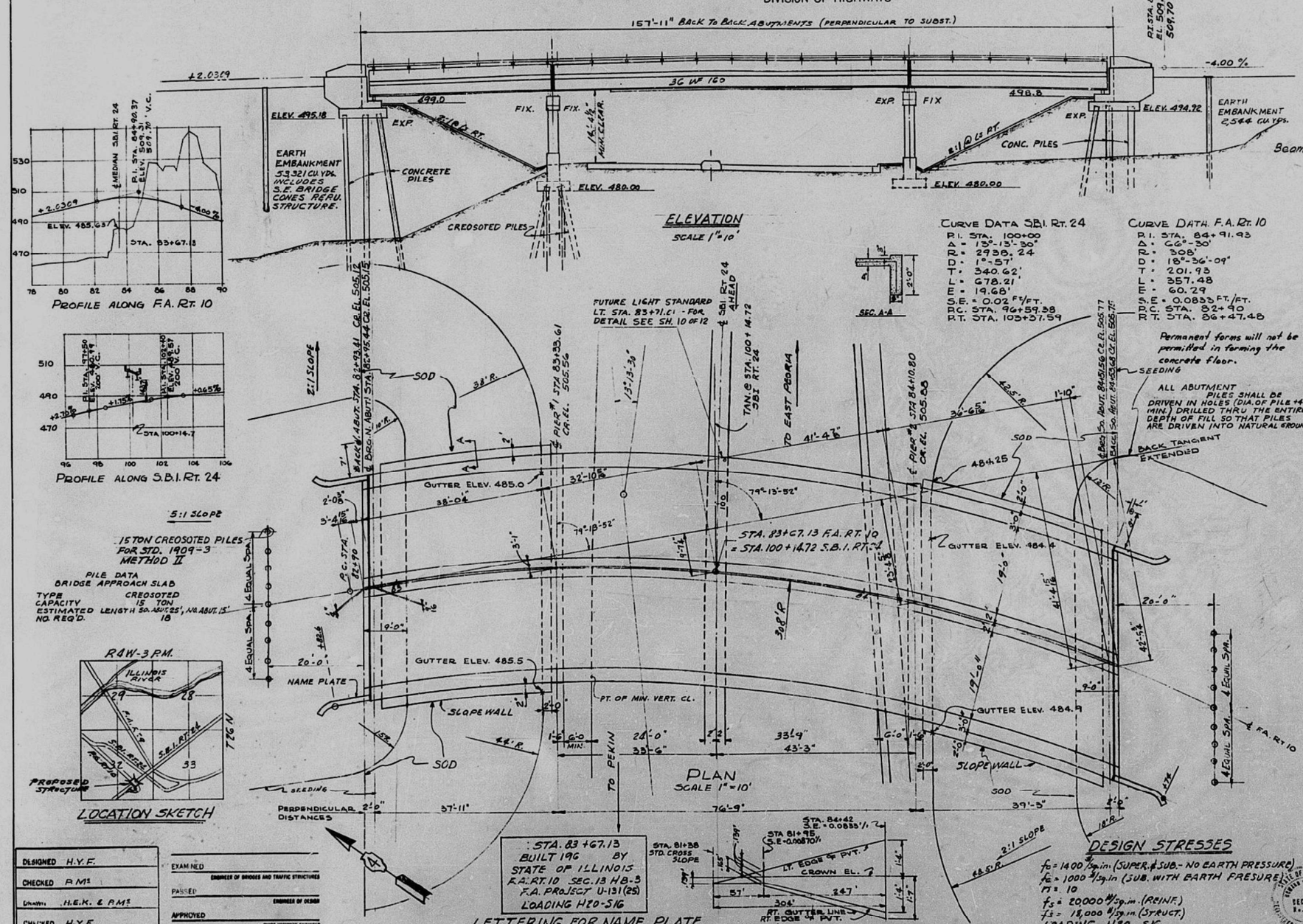

GENERAL NOTES

Class 'X' Concrete shall be used throughout. Coarse aggregate which is to be used in parapet handrail & end posts must be free of chert, flint, limonite, lignite, and soft sandstone.

The concrete floor slab shall be finished in accordance with Article 51.19 of the Standard Specifications and shall be poured in one continuous operation between the limits of the construction joints shown.

All curbs and slab outside of longitudinal bonded construction joints shall be poured monolithically.

Beams and cover plates span 2 only shall conform to ASTM Designation A 373, Structural Steel for Welding.

Rivets 3/4 ϕ, open holes 13/16" ϕ unless noted.

All rocker, bolsters, bearing plates, lead plates, pintles and anchor bolts shall be fabricated and set in accordance with Article 51.15 of the Standard Specifications and are included in quantities of Structural Steel. Estimated weight 12,340 lbs.

Anchor bolts shall be set before riveting diaphragms over supports.

Roadway expansion guards shall be assembled in the shop in the proper position with the adjacent ends in place and shall be left assembled for shop inspection.

Expansion guards shall be fabricated and erected in accordance with Article 51.18(G) of the Standard Specifications and are included in quantities of Structural Steel.

Except as otherwise noted all structural steel shall receive one shop coat of red lead paint and two field coats of aluminum paint. See Articles 56.1 to 56.5 of the Standard Specifications. All paint shall be furnished and applied by the Contractor.

The Contractor shall drive two concrete Test Piles at permanent locations, one in North Abutment Front and one in South Abutment Left as directed by the Engineer before ordering or casting the remainder of the piles.

The Contractor shall drive one Timber Test Pile at a permanent location in Pier No. 1 Left as directed by the Engineer before ordering the remainder of the piles.

Unless otherwise shown on the plans, reinforcement bars shall be lapped 20 bar diameters.

TOTAL BILL OF MATERIAL

ITEM		SUPER.	SUBSTR	TOTAL
CLASS X CONCRETE	CU. YD.	256.0	304.7	560.7
REINFORCEMENT BARS	LBS.	55,930	26,550	82,470
FURNISHING AND ERECTING STRUCTURAL STEEL	LBS	241,330		241,330
ALUMINUM HANDRAIL	LIN. FT.	316		316
FURNISHING CONCRETE PILES	LIN. FT.		880	880
DRIVING CONCRETE PILES	LIN. FT.		880	880
FURNISHING CREOSOTED PILES (20'-30')	LIN. FT.		900	900
DRIVING TIMBER PILES	LIN. FT.		1035	1035
TEST PILES (CONCRETE)	EA.		2	2
TEST PILE (TIMBER)	EA.		1	1
SLOPE WALL, 4 INCH	SQ. YD.		461	461
CLASS A EXCAVATION FOR STRUCTURES	CU. YD.		176	176
NAME PLATE	EA.	1		1
FURNISHING CREOSOTED PILES UP TO 20'	LIN. FT.		135	135
PROTECTIVE COAT	SQ. YD.			941

GENERAL PLAN & ELEVATION

F.A. ROUTE 10 SECTION 13 HB-3

F.A. PROJECT U-131 (25)

F.A. ROUTE 10 OVER S.B.I. ROUTE 24

STATION 83 + 67.13

TAZEWELL COUNTY

WARREN AND VAN PRAAG, INC.
CONSULTING ENGINEERS - DECATUR, ILLINOIS

DESIGNED	H.Y.F.
CHECKED	R.M.
DRAWN	H.E.K. & R.M.
CHECKED	H.Y.F.

EXAMINED — ENGINEER OF BRIDGES AND TRAFFIC STRUCTURES
PASSED — ENGINEER OF DESIGN
APPROVED — CHIEF HIGHWAY ENGINEER

Revised 6/16/82 Quantities of Reinf. Bars chgd. from 50,630 to 55,930 (Super.) & from 79,180 to 82,470 (Total) Added Item Protective Coat. JEK

ADD RADIUS RADII POINTS

STATE OF ILLINOIS
DEPARTMENT OF PUBLIC WORKS & BUILDINGS
DIVISION OF HIGHWAYS

ROUTE No.	SEC.	COUNTY	TOTAL SHEETS	SHEET NO.
F.A. 10	13 HB-3	TAZEWELL	50	12
FED. ROAD DIST. No. 7	ILLINOIS	PROJECT	( )	

SH. 2 OF 12

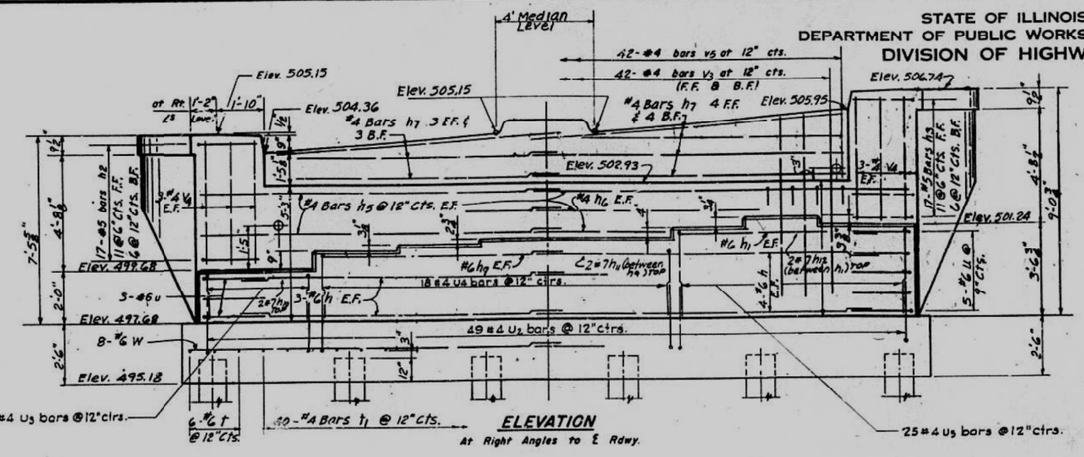

ELEVATION
At Right Angles to ℄ Rdwy.

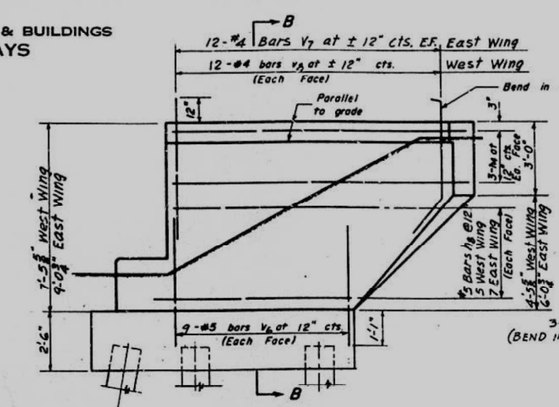

SIDE ELEVATION

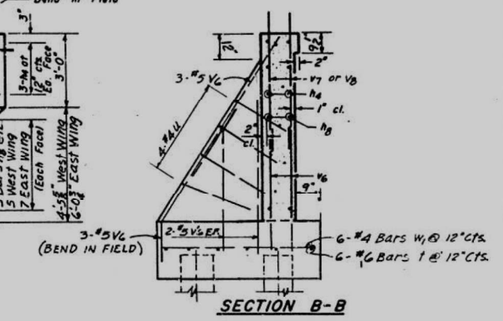

SECTION B-B

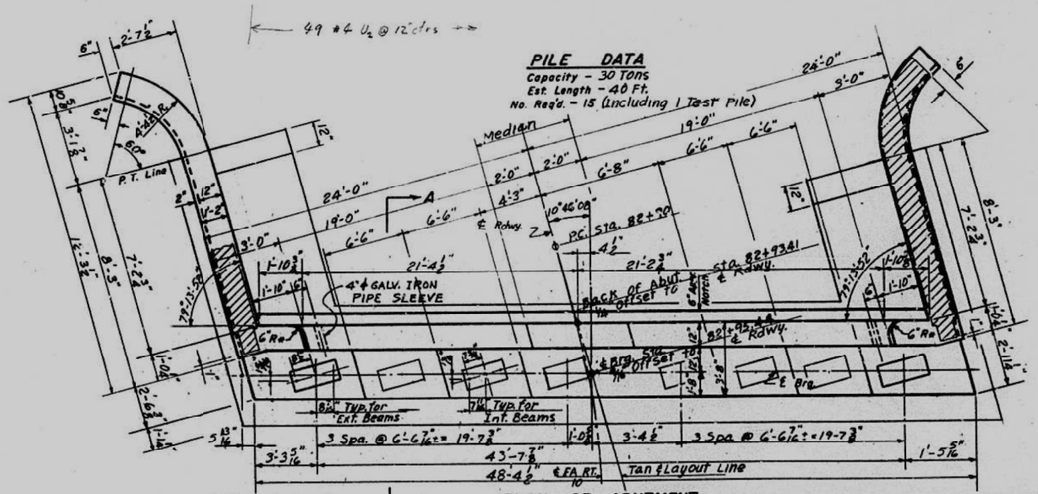

PLAN OF ABUTMENT
Dimensions

* Note: Contractor shall construct curb without radius when a curb & gutter are used on bridge approaches (See road plans).

SHADED AREA TO BE POURED AFTER SUPERSTRUCTURE FALSEWORK HAS BEEN REMOVED. QUANTITY OF CLASS "X" CONC. INCLUDED WITH ABUT. QUANT.

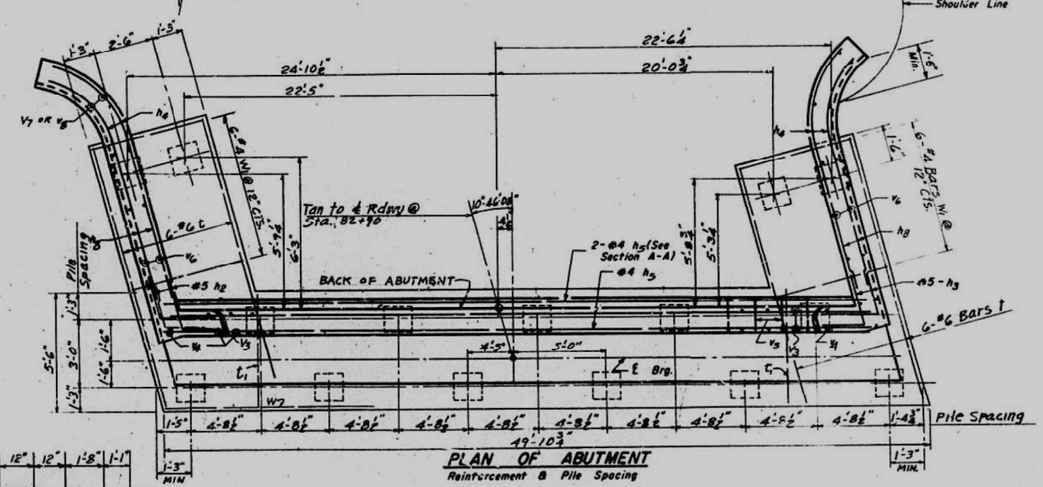

PLAN OF ABUTMENT
Reinforcement & Pile Spacing

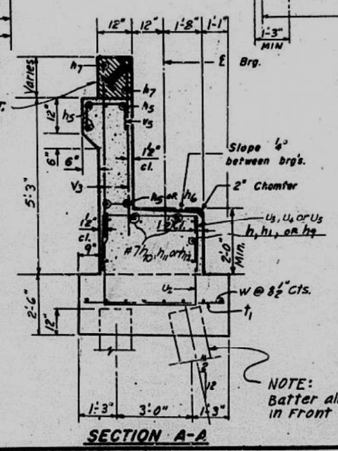

SECTION A-A

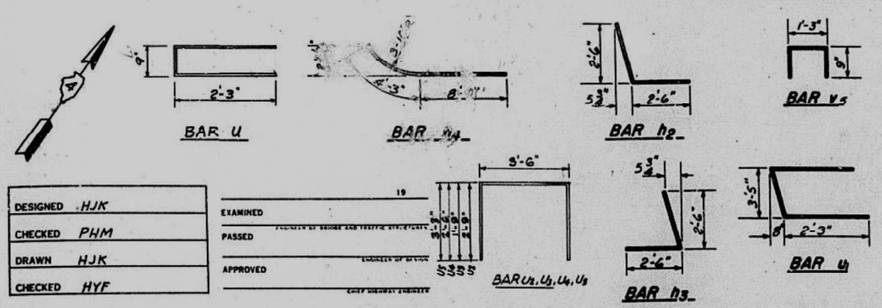

BILL OF REINFORCEMENT

Bar	No.	Size	Length	Shape	Bar	No.	Size	Length	Shape
h	14	#6	29'-0"		U3	6	#4	7'-0"	
h1	8	#6	17'-0"		U4	18	#4	8'-6"	
h2	17	#5	5'-0"		U5	25	#4	10'-3"	
h3	17	#5	5'-0"		V3	42	#4	5'-10"	
h4	12	#5	12'-3"		V4	12	#4	6'-6"	
h5	14	#4	24'-3"		V5	42	#4	2'-9"	
h6	2	#4	7'-3"		V6	56	#5	6'-6"	
h7	14	#4	21'-8"		V7	24	#4	7'-0"	
h8	24	#5	9'-0"		V8	24	#4	6'-3"	
h9	2	#6	18'-6"		t	12	#6	11'-6"	
h10	2	#7	8'-0"		t1	40	#4	5'-3"	
h11	2	#7	22'-0"		W	16	#6	25'-6"	
h12	2	#7	25'-0"		W1	12	#4	4'-8"	
U	8	#4	5'-3"						
U1	8	#6	8'-0"						
U2	49	#4	8'-0"						

NOTE: v, v1, v2 bars not used.

BILL OF MATERIAL

Item	Unit	Quantity
Class X Concrete	Cu. Yd.	69.2
Reinforcement Bars	Lb.	6610
Concrete Pile	L.F.	560
Test Pile (Conc.)	Ea.	1

NORTH ABUTMENT

F.A. ROUTE 10 SECTION 13 HB-3

F.A. ROUTE 10 OVER S.B.I. ROUTE 24

STATION 83+67.13

TAZEWELL COUNTY

WARREN AND VAN PRAAG, INC.
CONSULTING ENGINEERS - DECATUR, ILLINOIS

DESIGNED	HJK
CHECKED	PHM
DRAWN	HJK
CHECKED	HYF

EXAMINED
PASSED
APPROVED

SBA-2

STATE OF ILLINOIS
DEPARTMENT OF PUBLIC WORKS & BUILDINGS
DIVISION OF HIGHWAYS

ROUTE No.	SEC.	COUNTY	TOTAL SHEETS	SHEET NO.
F.A. 10	13HB-3	TAZEWELL	50	13
FED. ROAD DIST. No. 7	ILLINOIS	PROJECT	( )	

SH. 3 OF 12

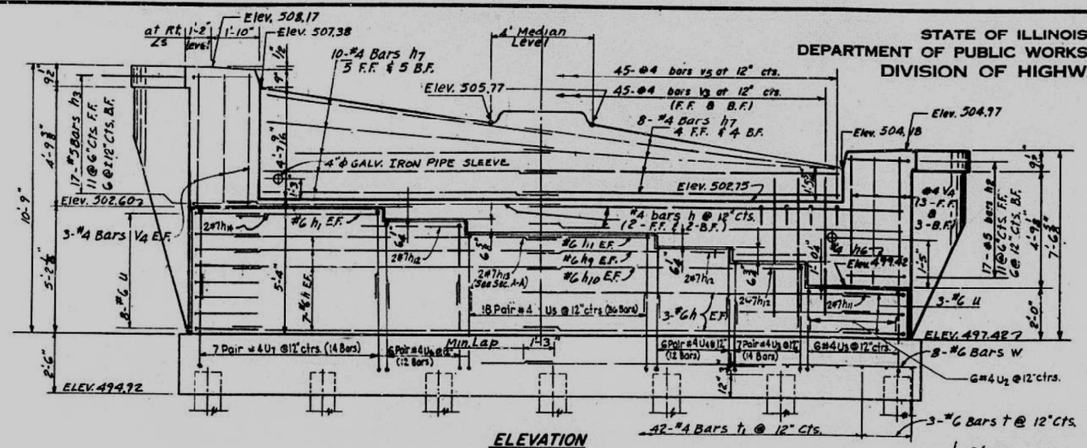

ELEVATION
At Right Angles to ℄ Rdwy.

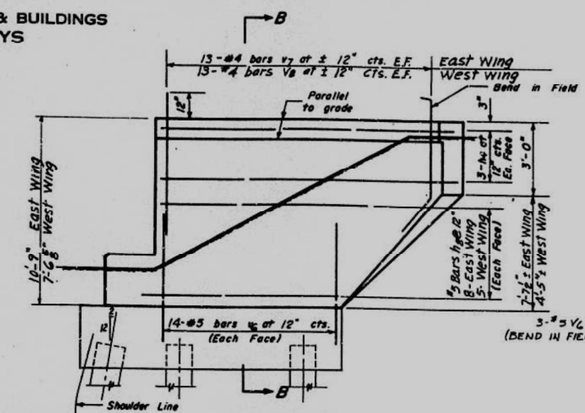

SIDE ELEVATION

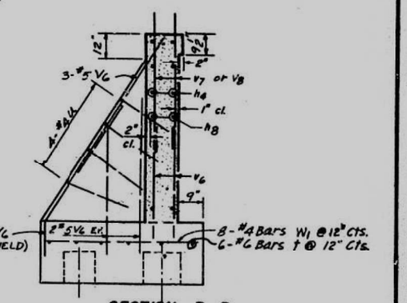

SECTION B-B

PILE DATA
Capacity - 28 Ton
Est. Length - 20 Ft.
No. Req'd. - 17 (Including 1 Test Pile)

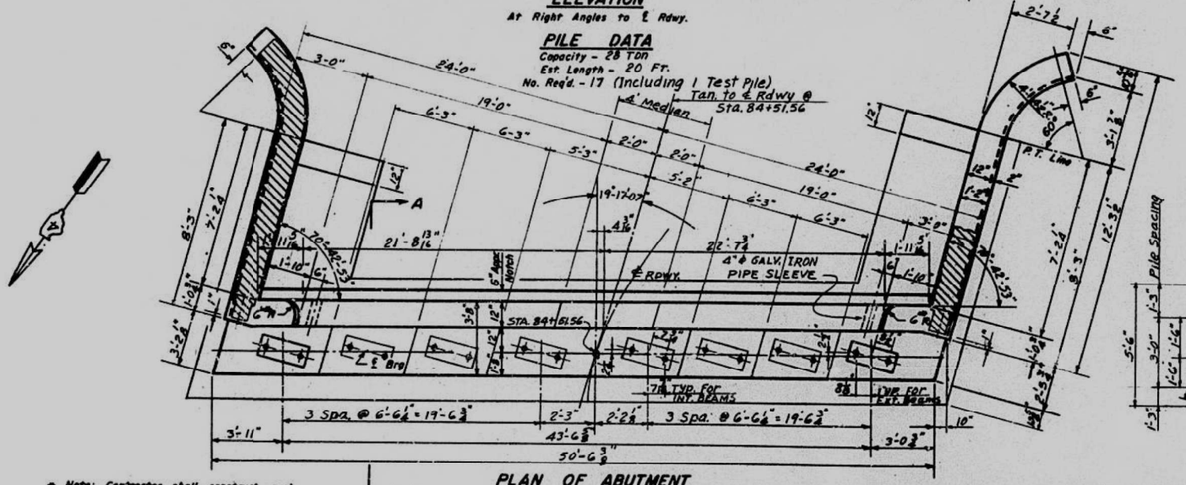

PLAN OF ABUTMENT
Dimensions

* Note: Contractor shall construct curb without radius when a curb & gutter are to be used on bridge approaches (See Road Plans).

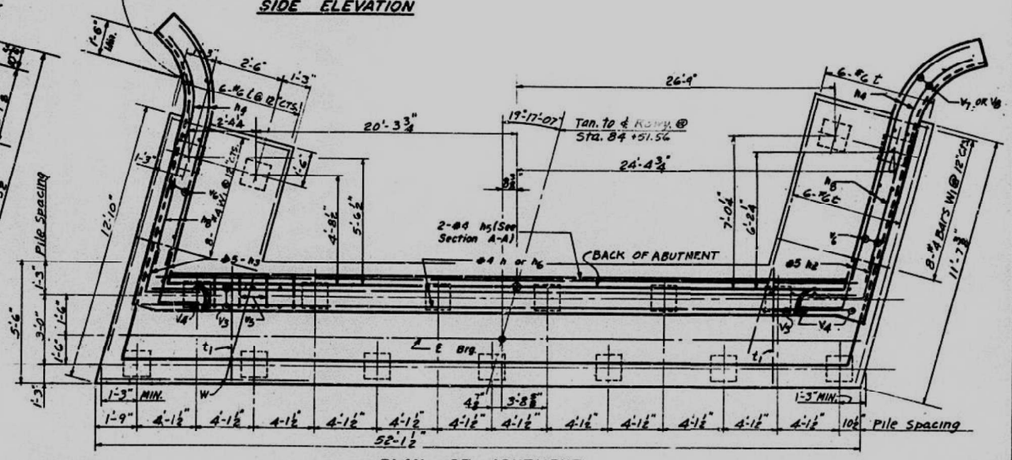

PLAN OF ABUTMENT
Reinforcement & Pile Spacing

SHADED AREA TO BE POURED AFTER SUPERSTRUCTURE FALSEWORK HAS BEEN REMOVED. QUANTITY OF CLASS "X" CONCRETE INCLUDED WITH ABUT.

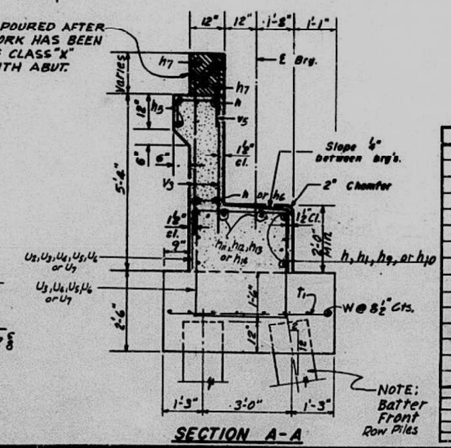

SECTION A-A

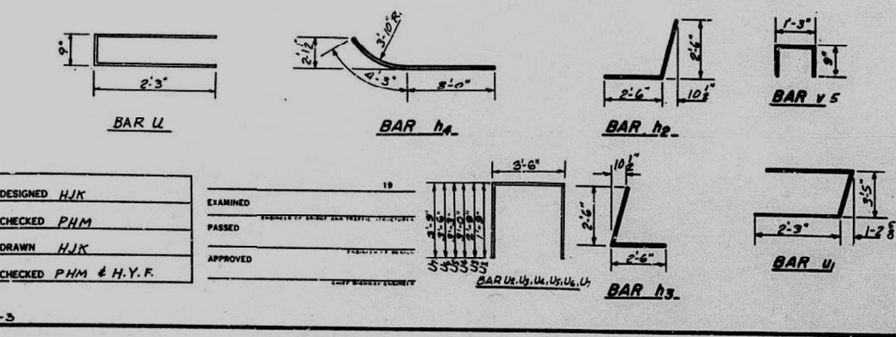

BILL OF REINFORCEMENT

Bar	No.	Size	Length	Shape	Bar	No.	Size	Length	Shape
h	26	#6	24'-9"	—	U5	36	#4	10'-0"	⊏
h1	4	#6	5'-2"	—	U6	12	#4	10'-6"	⊏
h2	17	#5	5'-2"	⌋	U7	14	#4	11'-0"	⊏
h3	17	#5	5'-2"	L	V3	90	#4	5'-10"	—
h4	12	#5	12'-3"	—	V4	12	#4	6'-6"	—
h5	10	#4	25'-9"	—	V5	45	#4	2'-8"	⊏
h6	1	#4	12'-3"	—	V6	76	#5	5'-0"	⊏
h7	18	#4	23'-0"	—	V7	26	#4	9'-3"	—
h8	26	#5	13'-6"	—	V8	26	#4	6'-0"	—
h9	2	#6	12'-6"	—					
h10	2	#6	18'-9"	—					
h11	2	#7	7'-0"	—	t	12	#6	11'-0"	—
h12	6	#7	8'-0"	—	t1	42	#4	5'-3"	—
h13	2	#7	19'-6"	—	W	16	#6	26'-8"	—
h14	2	#7	6'-6"	—	W1	16	#4	4'-8"	—
U	8	#4	8'-3"	⊏					
U1	11	#6	4'-2"	⊏					
U2	6	#4	7'-0"	⊏					
U3	20	#4	9'-0"	⊏					
U4	16	#4	9'-0"	⊏					

NOTE: V, V2, V3 bars not used.

BILL OF MATERIAL

Item	Unit	Quantity
Class X Concrete	Cu. Yd.	81.3
Reinforcement Bars	Lb.	5490
CONC. PILE	L.F.	320
TEST PILE (CONC.)	EA.	1

SOUTH ABUTMENT

F. A. ROUTE 10 SECTION 13 HB-3

℄ A. ROUTE 10 OVER S. B. I. ROUTE 24
STATION 83+67.13
TAZEWELL COUNTY

WARREN AND VAN PRAAG, INC.
CONSULTING ENGINEERS DECATUR, ILLINOIS

DESIGNED	HJK
CHECKED	PHM
DRAWN	HJK
CHECKED	PHM & H.Y.F.

EXAMINED 19
PASSED
APPROVED

SBA-3

MODEL: Default
FILE NAME: pw://msi-us-pw.bentley.com:msi-pw-03:Documents/Chicago_IL(0) Projects\179740 IDOT Cedar\SEx PRIT5.0 CADD\CAD Sheets\ExistingStructurePlan-68C55-074.dgn

Michael Baker INTERNATIONAL
200 W Adams Street Suite 1800 Chicago, IL 60606 PH: 312.707.8770 FAX: 312.707.8804

USER NAME = DLamb	DESIGNED -	REVISED -	
	CHECKED -	REVISED -	
PLOT SCALE = 0:2.0000 ':" / in.	DRAWN -	REVISED -	
PLOT DATE = 5/1/2023	CHECKED -	REVISED -	

STATE OF ILLINOIS
DEPARTMENT OF TRANSPORTATION

EXISTING STRUCTURES PLANS

SHEET S-74 OF S-85 SHEETS

F.A.P. RTE.	SECTION	COUNTY	TOTAL SHEETS	SHEET NO.
VAR.	13 (HVB, HB-3) BR-1;R	TAZEWELL	1173	515
		CONTRACT NO. 68C55		
	ILLINOIS	FED. AID PROJECT		

STATE OF ILLINOIS
DEPARTMENT OF PUBLIC WORKS & BUILDINGS
DIVISION OF HIGHWAYS

ROUTE No.	SEC.	COUNTY	TOTAL SHEETS	SHEET NO.
F.A. 10	13HB-3	TAZEWELL	50	14
FED. ROAD DIST. No.		ILLINOIS	PROJECT ( )	

SH. 4 OF 12

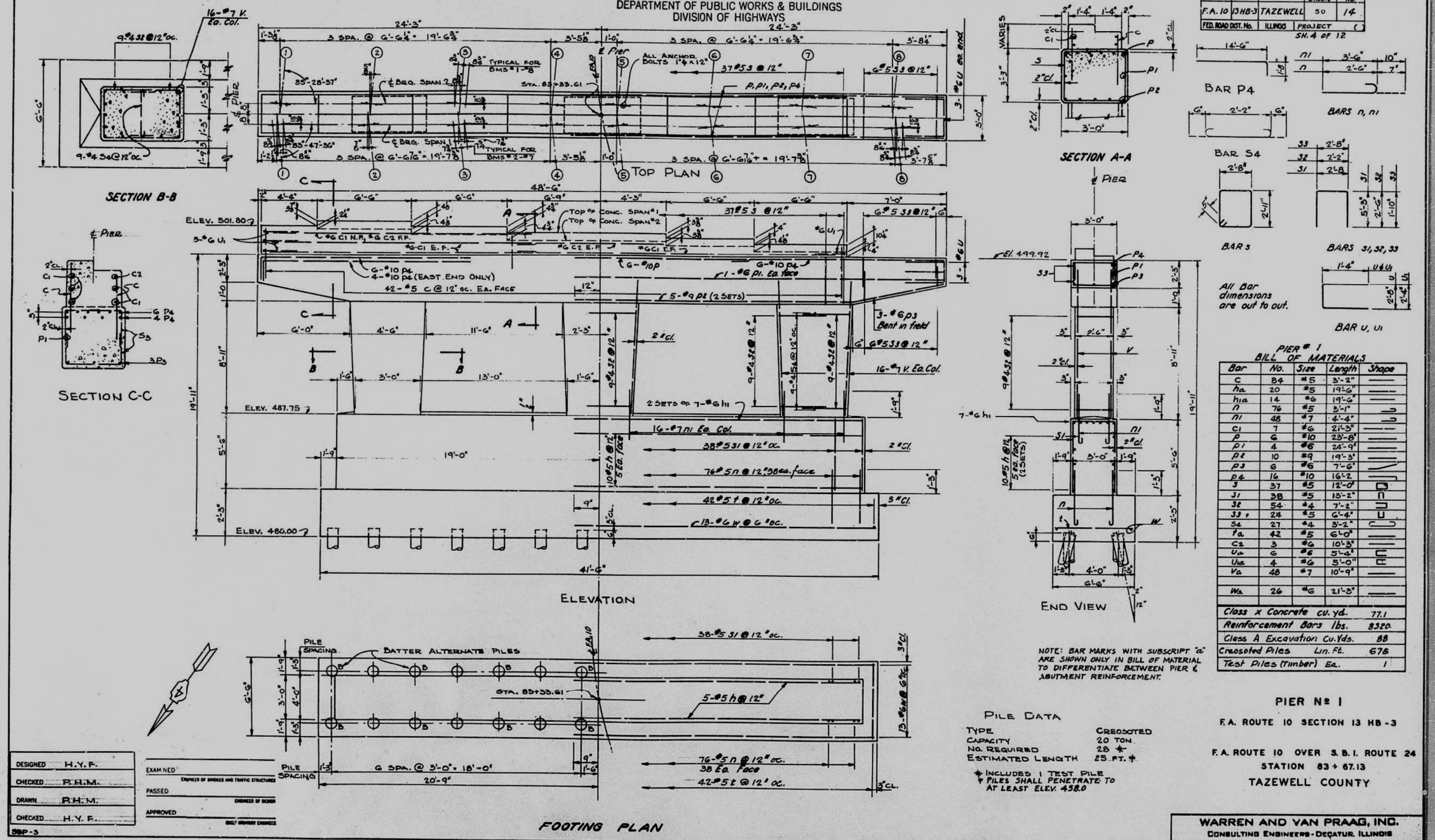

NOTE: BAR MARKS WITH SUBSCRIPT "a" ARE SHOWN ONLY IN BILL OF MATERIAL TO DIFFERENTIATE BETWEEN PIER & ABUTMENT REINFORCEMENT.

PIER # 1
BILL OF MATERIALS

Bar	No.	Size	Length	Shape
C	84	#5	3'-2"	
ha	20	#5	19'-6"	
h1a	14	#6	19'-6"	
n	76	#5	3'-1"	
n1	48	#7	4'-4"	
C1	7	#6	21'-3"	
P	6	#10	23'-8"	
P1	4	#6	24'-9"	
P2	10	#9	19'-3"	
P3	6	#6	7'-6"	
P4	16	#10	16'-2"	
S	37	#5	12'-0"	
S1	38	#5	15'-2"	
S2	54	#4	7'-2"	
S3	24	#5	6'-4"	
S4	27	#4	3'-2"	
Ua	42	#5	6'-0"	
C2	3	#6	10'-3"	
Ua	6	#6	5'-4"	
Ua	4	#6	5'-0"	
Va	48	#7	10'-9"	
Wa	26	#6	21'-3"	

Class X Concrete	cu. yd.	77.1
Reinforcement Bars	lbs.	8320
Class A Excavation	cu. yds.	88
Creosoted Piles	Lin. Ft.	676
Test Piles (Timber)	Ea.	1

PILE DATA

TYPE	CREOSOTED
CAPACITY	20 TON
NO. REQUIRED	28 *
ESTIMATED LENGTH	25 FT. †

* INCLUDES 1 TEST PILE
† PILES SHALL PENETRATE TO AT LEAST ELEV. 458.0

PIER Nº 1

F.A. ROUTE 10 SECTION 13 HB-3

F.A. ROUTE 10 OVER S.B.I. ROUTE 24
STATION 83 + 67.13
TAZEWELL COUNTY

DESIGNED	H.Y.F.
CHECKED	P.H.M.
DRAWN	P.H.M.
CHECKED	H.Y.F.

S8P-3

EXAMINED ENGINEER OF BRIDGES AND TRAFFIC STRUCTURES
PASSED ENGINEER OF DESIGN
APPROVED CHIEF HIGHWAY ENGINEER

WARREN AND VAN PRAAG, INC.
CONSULTING ENGINEERS - DECATUR, ILLINOIS

MODEL: Default
FILE NAME: pw:\\mb-us-pw.bentley.com:mb-us-pw-03\Documents\Chicago_IL\01_Projects\179740 IDOT Cedar\SEK# PIER5.0 CADD\CADD Sheets\ExistingStructure\Plans-68C55-075.dgn

Michael Baker INTERNATIONAL
200 W Adams Street Suite 1800 Chicago, IL 60606 PH: 312.707.8770 FAX: 312.707.8804

USER NAME = DLamb	DESIGNED -	REVISED -	
	CHECKED -	REVISED -	
PLOT SCALE = 0:2.0000 ':" / in.	DRAWN -	REVISED -	
PLOT DATE = 5/1/2023	CHECKED -	REVISED -	

STATE OF ILLINOIS
DEPARTMENT OF TRANSPORTATION

EXISTING STRUCTURES PLANS

SHEET S-75 OF S-85 SHEETS

F.A.P. RTE.	SECTION	COUNTY	TOTAL SHEETS	SHEET NO.
VAR.	13 (HVB, HB-3) BR-1;R	TAZEWELL	1173	516
		CONTRACT NO. 68C55		
		ILLINOIS FED. AID PROJECT		

STATE OF ILLINOIS
DEPARTMENT OF PUBLIC WORKS & BUILDINGS
DIVISION OF HIGHWAYS

ROUTE No.	SEC.	COUNTY	TOTAL SHEETS	SHEET NO.
F.A. 10	13 HB-3	TAZEWELL	50	15
FED. ROAD DIST. No.	ILLINOIS	PROJECT		

SH. 5 OF 12

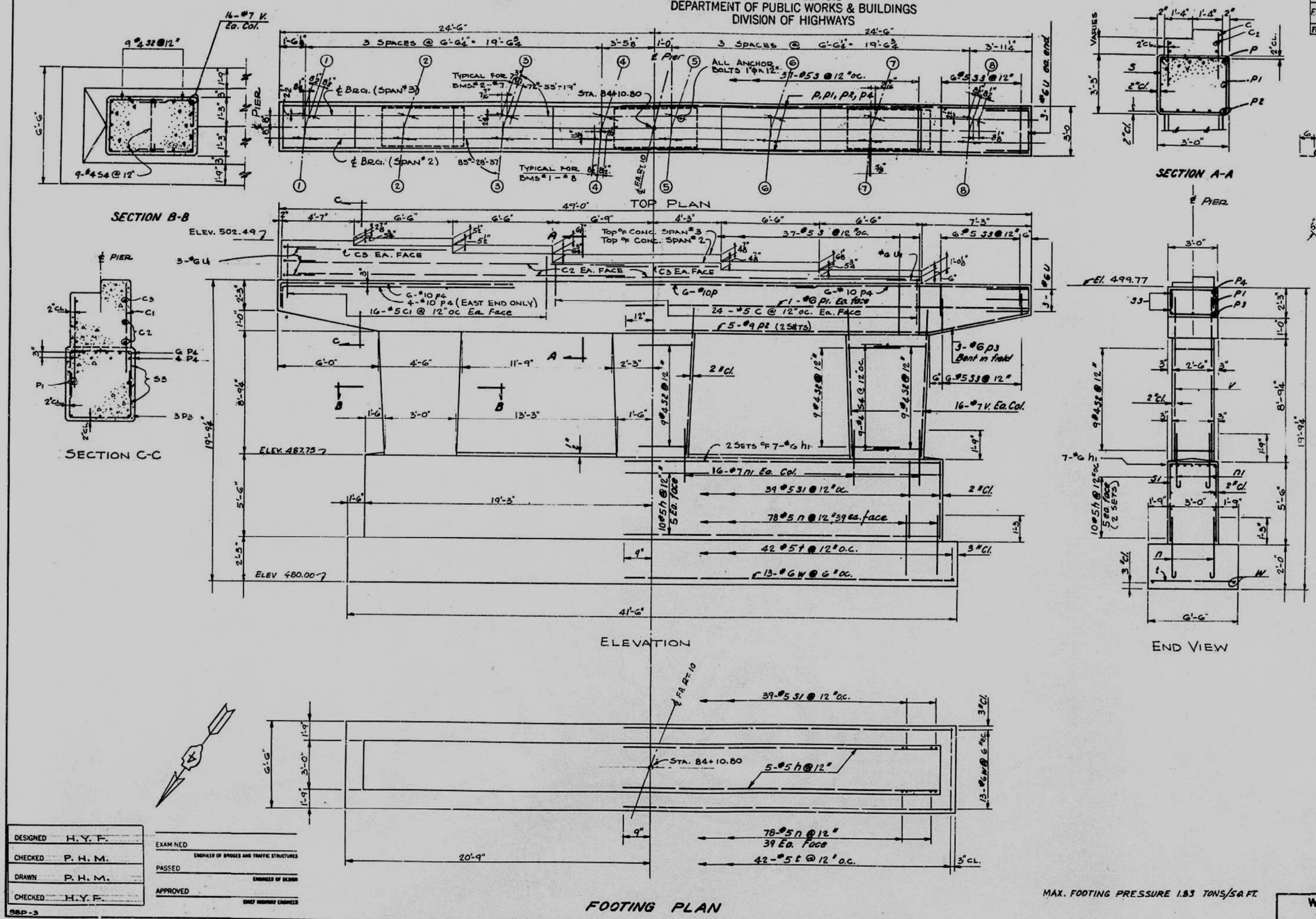

PIER # 2
BILL OF MATERIALS

Bar	No.	Size	Length	Shape
c	48	#5	3'-0"	
ha	20	#5	14'-9"	
h1a	14	#6	19'-9	
n	78	#5	3'-1"	
n1	48	#7	4'-6"	
c1	32	#5	4'-0"	
p	6	#10	24'-2"	
p1	4	#6	25'-0"	
p2	10	#9	19'-6"	
p3	6	#6	7'-6"	
p4	16	#10	16'-2"	
s	37	#5	12'-0"	
s1	39	#5	13'-2"	
s2	54	#4	7'-2"	
s3	24	#5	6'-4"	
s4	27	#4	3'-2"	
ta	42	#5	6'-0"	
c3	4	#6	10'-0	
Ua	6	#6	5'-4"	
U1a	4	#6	5'-0	
Va	48	#7	10'-6"	
c2	6	#6	21'-3	
Wa	26	#6	21'-5"	
Class X Concrete cu. yd.			77.1	
Reinforcement Bars lbs.			8330	
Class A Excavation Cu.Yd.			88	

NOTE: BAR MARKS WITH SUBSCRIPT "a" ARE SHOWN ONLY IN BILL OF MATERIAL TO DIFFERENTIATE BETWEEN PIER & ABUTMENT REINFORCEMENT

PIER № 2

F. A. ROUTE 10 SECTION 13 HB - 3

F. A. ROUTE 10 OVER S. B. I. ROUTE 24
STATION 83 + 67.13
TAZEWELL COUNTY

WARREN AND VAN PRAAG, INC.
CONSULTING ENGINEERS - DECATUR, ILLINOIS

DESIGNED	H. Y. F.
CHECKED	P. H. M.
DRAWN	P. H. M.
CHECKED	H. Y. F.

EXAMINED — ENGINEER OF BRIDGES AND TRAFFIC STRUCTURES
PASSED — ENGINEER OF DESIGN
APPROVED — CHIEF HIGHWAY ENGINEER

S&P-3

STATE OF ILLINOIS
DEPARTMENT OF PUBLIC WORKS & BUILDINGS
DIVISION OF HIGHWAYS

ROUTE No.	SEC.	COUNTY	TOTAL SHEETS	SHEET No.
F.A. RT. 10	13-HB-3	TAZEWELL	50	16
FED. ROAD DIST. No. 7	ILLINOIS	PROJECT		

SH. 6 OF 12

NOTE:
FOR LOCATION AND DETAIL OF PARAPET CONSTRUCTION JOINTS SEE SH. 10 OF 12

NOTE: FOR PLAN OF EXP. GUARDS SEE SH. NO. 10 OF 12

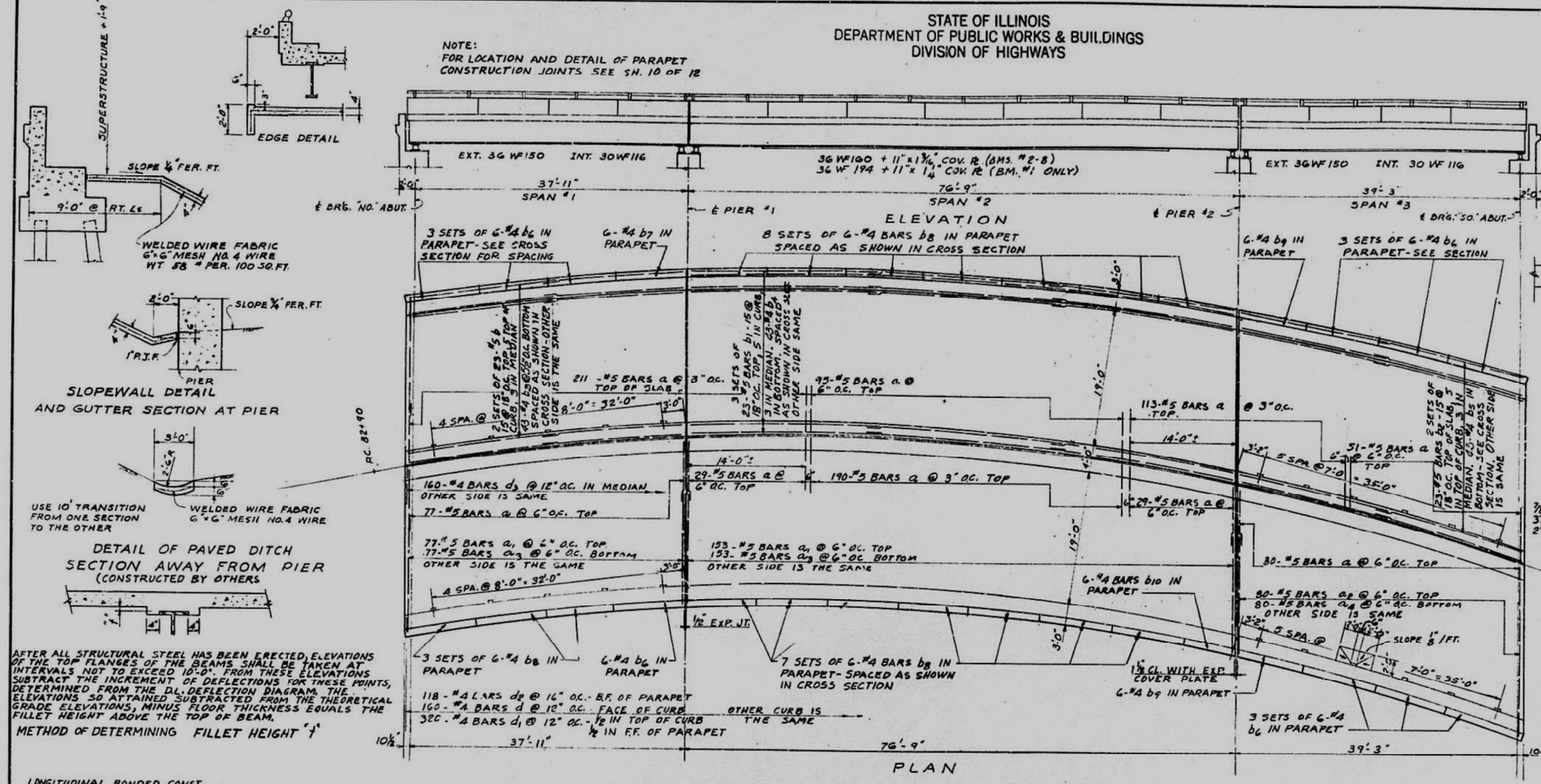

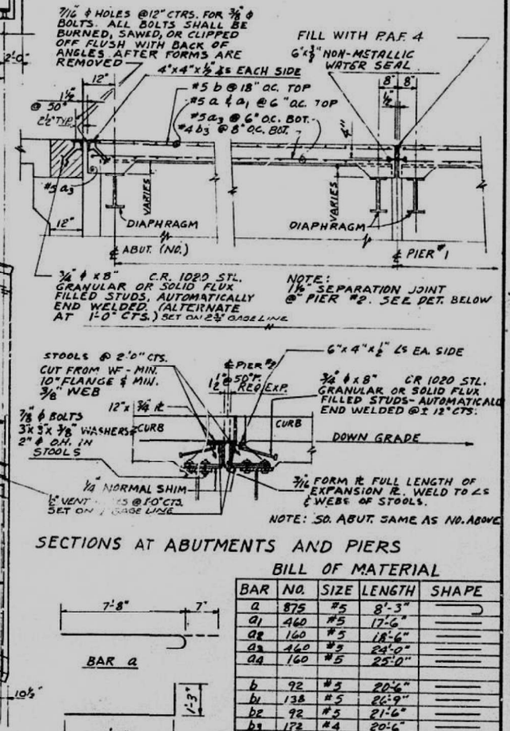

SECTIONS AT ABUTMENTS AND PIERS

BILL OF MATERIAL

BAR	NO.	SIZE	LENGTH	SHAPE
a	875	#5	8'-3"	
a1	460	#5	17'-6"	
a2	160	#5	18'-6"	
a3	460	#5	24'-0"	
a4	160	#5	25'-0"	
b	92	#5	20'-6"	
b1	138	#5	20'-9"	
b2	92	#5	21'-6"	
b3	172	#4	20'-6"	
b4	258	#4	24'-9"	
b5	172	#4	21'-6"	
b6	60	#4	9'-8"	
b7	6	#4	8'-10"	
b8	108	#4	9'-4"	
b9	12	#4	11'-4"	
b10	6	#4	8'-3"	
d	320	#4	1'-1"	
d1	640	#4	2'-8"	
d2	236	#4	3'-10"	
d3	320	#4	2'-1"	
CLASS X CONCRETE			CU. YDS. 252.9	
REINFORCEMENT BARS			LBS. 52,660	
*STRUCTURAL STEEL			LBS. 241,230	
NAME PLATE			EA. 1	

BAR a

BAR d2

BAR d3

SUPERSTRUCTURE

F.A. ROUTE 10 SECTION 13 HB-3

F.A. ROUTE 10 OVER S.B.I. ROUTE 24

STATION 83 + 67.13

TAZEWELL COUNTY

WARREN AND VAN PRAAG, INC.
CONSULTING ENGINEERS - DECATUR, ILLINOIS

DESIGNED	H.Y.F. H.J.K.
CHECKED	P.H.M.
DRAWN	H.Y.F. H.J.K.
CHECKED	P.H.M. H.Y.F.

EXAMINED — ENGINEER OF BRIDGES AND TRAFFIC STRUCTURES
PASSED — ENGINEER OF DESIGN
APPROVED — CHIEF HIGHWAY ENGINEER

Revised 4/11/62 Bottom Slab (Distribution Steel) chgd. to #5 Spacing from 8" to 9". Quantity of Reinf. Bars chgd. from 52,370 to 52,660 lbs.
Added 3/4" Wet Joints on Exp. Guard (detail). Number of b6 bars chgd. from 112 to 172, b4 from 168 to 258 & b5 from 112 to 172. Quantity of Reinf. Bars chgd. from 52,370 to 52,660 lbs.
Removed 6" P.I.F. Wall, Abut. cap & slopewall. J.F.K.

STATE OF ILLINOIS
DEPARTMENT OF PUBLIC WORKS & BUILDINGS
DIVISION OF HIGHWAYS

ROUTE No.	SEC.	COUNTY	TOTAL SHEETS	SHEET No.
F.A. 10	13-HB-3	TAZEWELL	50	17
FED. ROAD DIST. No. 7	ILLINOIS	PROJECT		

SH. 7 OF 12

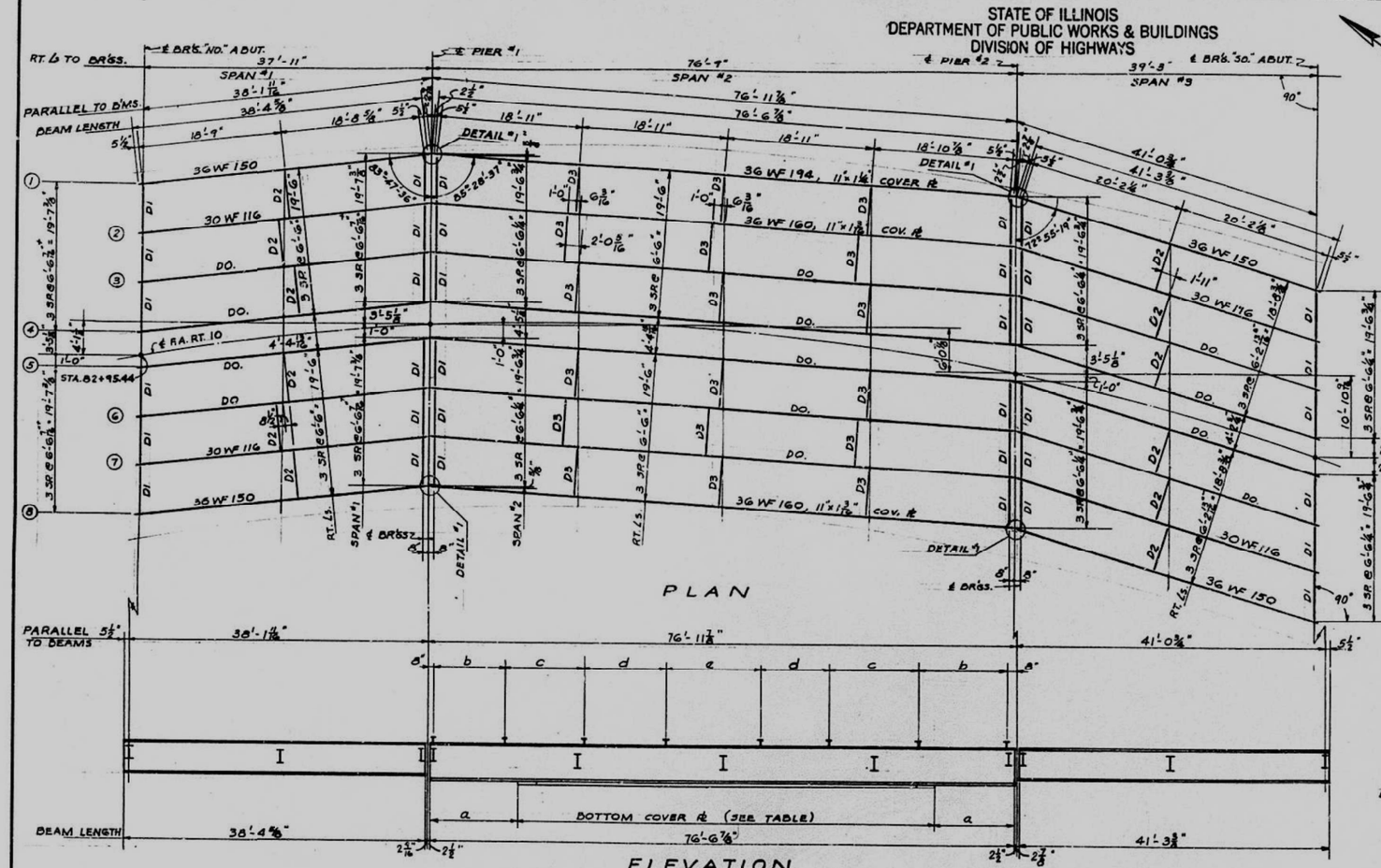

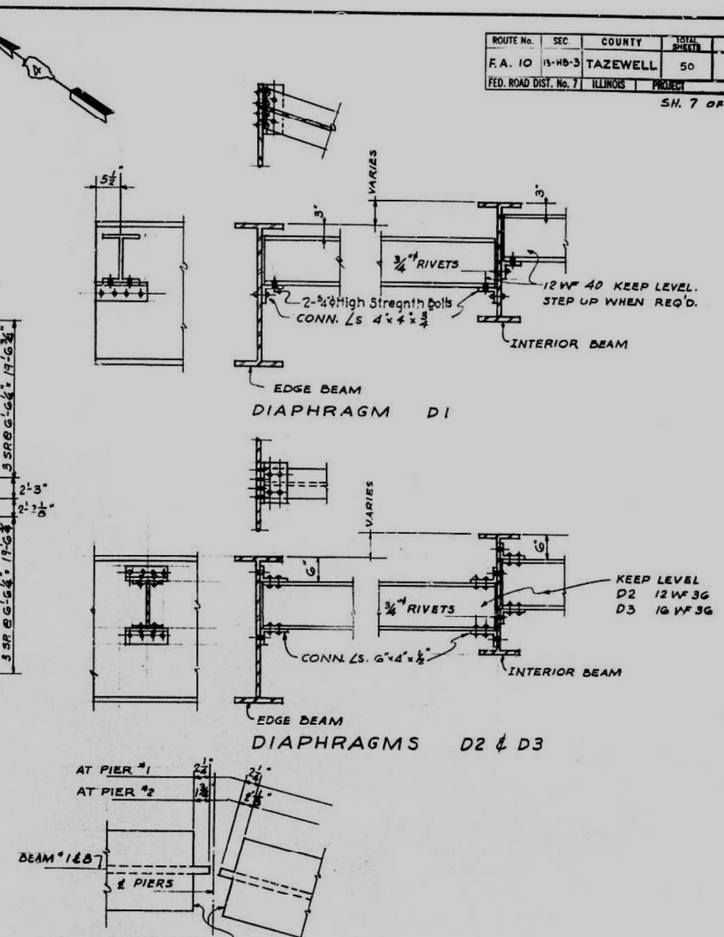

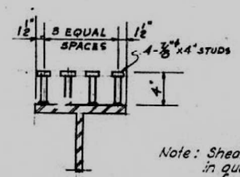

SHEAR STUD DETAIL

Note: Shear connectors included in quantity of structural steel.

COMPOSITE BEAM DATA FOR SPAN 2

BEAM NO.	SIZE	BOTTOM COVER PL	a	SHEAR STUD SPACING b	c	d	e
1	36 WF 194	11"x1 1/4"x 56'-0"	10'-3 7/16"	13 SR @ 11" = 11'-11"	8 SR @ 1'-8" = 10'-0"	7 SR @ 1'-6" = 10'-6"	6 SR @ 1'-9 1/2" ±
2 TO 8	36 WF 160	11"x1 3/16"x 59'-2"	8'-8 7/16"	12 SR @ 10" = 10'-0"	10 SR @ 1'-1" = 10'-10"	7 SR @ 1'-4" = 9'-4"	9 SR @ 1'-8 3/8" ±

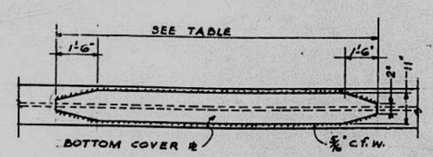

COVER PL DETAIL

DESIGNED	H.Y.F.
CHECKED	R.H.M.
DRAWN	H.Y.F.
CHECKED	R.H.M.

EXAMINED — ENGINEER OF BRIDGES AND TRAFFIC STRUCTURES
PASSED — ENGINEER OF DESIGN
APPROVED — CHIEF HIGHWAY ENGINEER

SUPERSTRUCTURE STRUCTURAL STEEL

F.A. ROUTE 10 SECTION 13 HB-3

F.A. ROUTE 10 OVER S.B.I. ROUTE 24
STATION 83+67.13
TAZEWELL COUNTY

WARREN AND VAN PRAAG, INC.
CONSULTING ENGINEERS - DECATUR, ILLINOIS

MODEL: Default
FILE NAME: pw:\\mbi-us-pw.bentley.com:mbi-us-pw-03\Documents\Chicago_IL\01 Projects\179740 IDOT Cedar\SIE\1 PhII\5.0 CADD\CAD Sheets\ExistingStructurePlan-68C55-078.dgn

Michael Baker INTERNATIONAL
200 W Adams Street
Suite 1850
Chicago, IL 60606
PH: 312.707.8770
FAX: 312.707.8804

USER NAME = DLamb	DESIGNED -	REVISED -	
	CHECKED -	REVISED -	
PLOT SCALE = 0:2,0000 ':" / in.	DRAWN -	REVISED -	
PLOT DATE = 5/1/2023	CHECKED -	REVISED -	

STATE OF ILLINOIS
DEPARTMENT OF TRANSPORTATION

EXISTING STRUCTURES PLANS

SHEET S-78 OF S-85 SHEETS

F.A.P. RTE.	SECTION	COUNTY	TOTAL SHEETS	SHEET NO.
VAR.	13 (HVB, HB-3) BR-1;R	TAZEWELL	1173	519
		CONTRACT NO. 68C55		
		ILLINOIS	FED. AID PROJECT	

STATE OF ILLINOIS
DEPARTMENT OF PUBLIC WORKS & BUILDINGS
DIVISION OF HIGHWAYS

ROUTE No.	SEC.	COUNTY	TOTAL SHEETS	SHEET No.
FA. 10	13-HB-3	TAZEWELL	50	16
FED. ROAD DIST. No. 7	ILLINOIS	PROJECT		

SH. 8 OF 12

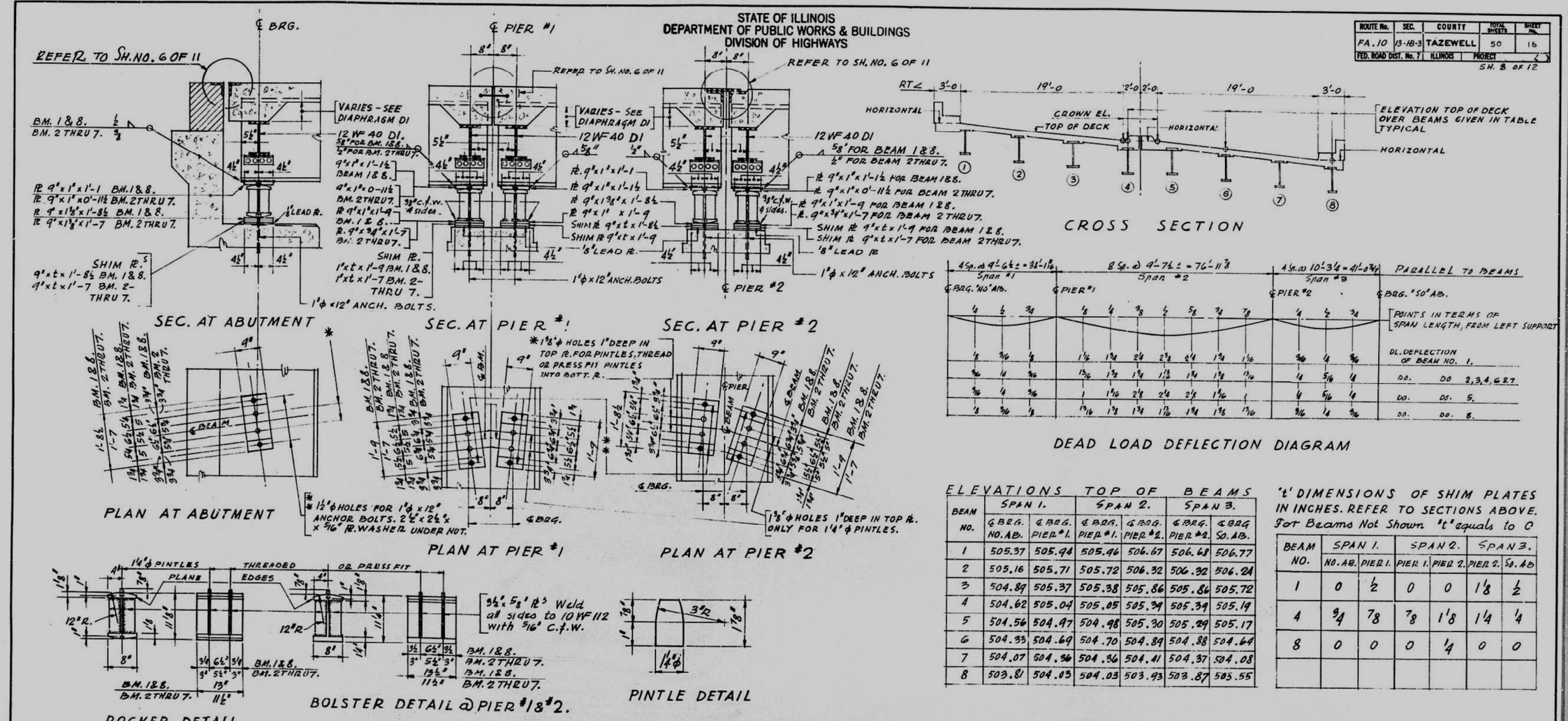

ELEVATIONS TOP OF BEAMS

BEAM NO.	SPAN 1. ℄ BRG. NO. AB.	SPAN 1. ℄ BRG. PIER #1.	SPAN 2. ℄ BRG. PIER #1.	SPAN 2. ℄ BRG. PIER #2.	SPAN 3. ℄ BRG. PIER #2.	SPAN 3. ℄ BRG So. AB.
1	505.37	505.94	505.96	506.67	506.68	506.77
2	505.16	505.71	505.72	506.32	506.32	506.24
3	504.89	505.37	505.38	505.86	505.86	505.72
4	504.62	505.04	505.05	505.39	505.39	505.19
5	504.56	504.97	504.98	505.30	505.29	505.17
6	504.33	504.69	504.70	504.89	504.88	504.64
7	504.07	504.36	504.36	504.41	504.37	504.08
8	503.81	504.03	504.03	503.93	503.87	503.55

't' DIMENSIONS OF SHIM PLATES IN INCHES. REFER TO SECTIONS ABOVE. For Beams Not Shown 't' equals to 0

BEAM NO.	SPAN 1. NO. AB.	SPAN 1. PIER 1.	SPAN 2. PIER 1.	SPAN 2. PIER 2.	SPAN 3. PIER 2.	SPAN 3. So. AB
1	0	½	0	0	1⅛	½
4	¾	⅞	⅞	1⅛	1¼	¼
8	0	0	0	¼	0	0

ELEVATIONS TOP OF DECK OVER BEAMS, SEE CROSS SECTION. POINTS GIVEN IN TERMS OF SPAN LENGTH FROM LEFT SUPPORT

BEAM NO.	SPAN #1 ℄ BRG. NO. AB.	SPAN #1 @ pointa ¼	SPAN #1 @ pointa ½	SPAN #1 @ pointa ¾	SPAN #1 ℄ BRG. PIER #1.	SPAN #2 ℄ BRG PIER #1.	SPAN #2 @ pointa ⅛	SPAN #2 @ pointa ¼	SPAN #2 @ pointa ⅜	SPAN #2 @ pointa ½	SPAN #2 @ pointa ⅝	SPAN #2 @ pointa ¾	SPAN #2 @ pointa ⅞	SPAN #2 ℄ BRG PIER #2.	SPAN #3 ℄ BRG. PIER #2.	SPAN #3 @ pointa ¼	SPAN #3 @ pointa ½	SPAN #3 @ pointa ¾	SPAN #3 ℄ BRG. So. AB.	BEAM NO.
1	505.95	506.10	506.25	506.39	506.52	506.54	506.66	506.77	506.86	506.94	507.03	507.12	507.19	507.25	507.26	507.31	507.34	507.35	507.35	1
2	505.74	505.87	506.01	506.15	506.29	506.30	506.36	506.41	506.47	506.54	506.61	506.70	506.79	506.90	506.90	506.87	506.85	506.84	506.82	2
3	505.47	505.59	505.71	505.83	505.95	505.96	506.01	506.05	506.09	506.13	506.20	506.26	506.31	506.44	506.44	506.39	506.35	506.32	506.30	3
4	505.20	505.30	505.41	505.51	505.62	505.63	505.66	505.70	505.76	505.80	505.84	505.86	505.89	505.97	505.97	505.90	505.85	505.81	505.77	4
5	505.14	505.25	505.36	505.46	505.55	505.56	505.63	505.66	505.68	505.72	505.76	505.81	505.87	505.88	505.87	505.86	505.82	505.78	505.75	5
6	504.91	505.00	505.09	505.17	505.27	505.28	505.28	505.29	505.30	505.31	505.33	505.37	505.41	505.47	505.47	505.38	505.31	505.25	505.23	6
7	504.65	504.72	504.79	504.86	504.94	504.94	504.93	504.92	504.91	504.91	504.91	504.92	504.95	504.99	504.99	504.88	504.79	504.73	504.70	7
8	504.39	504.45	504.50	504.55	504.61	504.61	504.62	504.63	504.63	504.62	504.59	504.56	504.51	504.51	504.50	504.38	504.26	504.20	504.18	8

DESIGNED	H.Y.F.	R.H.M.
CHECKED	H.Y.F.	
DRAWN	G.L.	
CHECKED	H.Y.F.	

EXAMINED — ENGINEER OF BRIDGES AND TRAFFIC STRUCTURES
PASSED — ENGINEER OF DESIGN
APPROVED — CHIEF HIGHWAY ENGINEER

MISCELLANEOUS DETAILS

F.A. ROUTE 10 SECTION 13 HB - 3

F.A. ROUTE 10 OVER S.B.I. ROUTE 24
STATION 63 + 67.13
TAZEWELL COUNTY

WARREN AND VAN PRAAG, INC.
CONSULTING ENGINEERS - DECATUR, ILLINOIS

STATE OF ILLINOIS
DEPARTMENT OF PUBLIC WORKS & BUILDINGS
DIVISION OF HIGHWAYS

ROUTE No.	SEC.	COUNTY	TOTAL SHEETS	SHEET NO.
F.A. 10.	13-HB-3	TAZEWELL	50	19
FED. ROAD DIST. No. 7	ILLINOIS	PROJECT	( )	

SH. NO. 9 OF 12

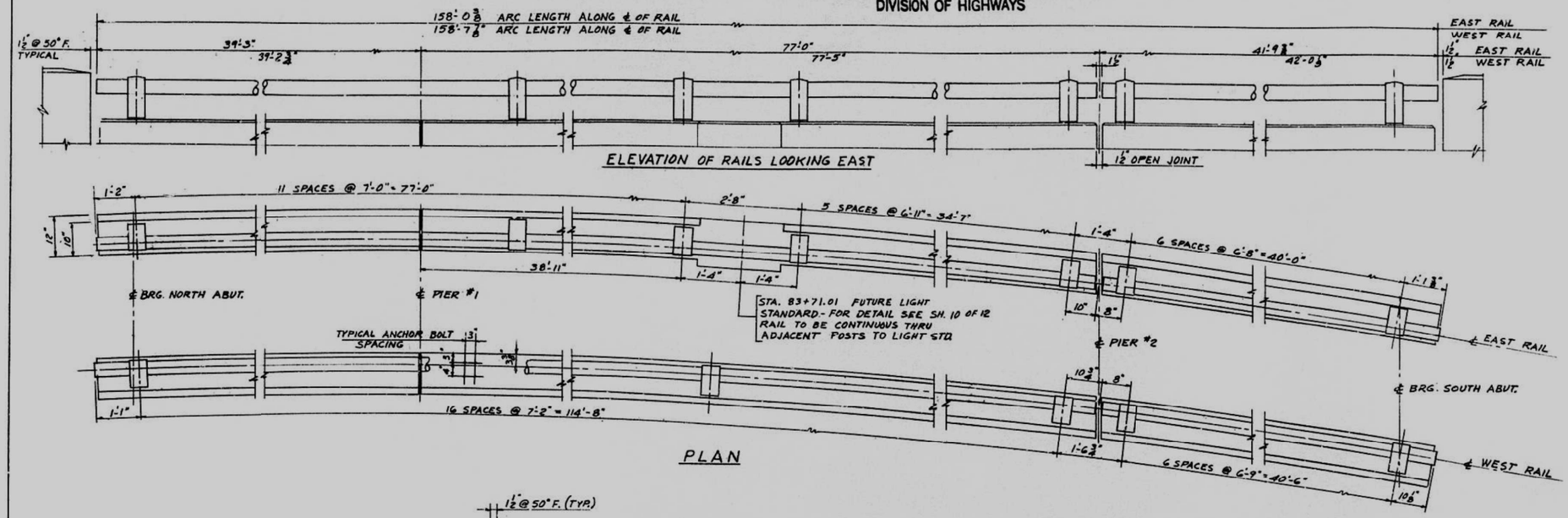

BILL OF MATERIAL

BAR	NO.	SIZE	LENGTH	SHAPE
C	16	#4	5'-3"	
C2	8	#4	3'-6"	
C3	8	#4	3'-4"	
C4	8	#4	3'-7"	
C5	24	#4	6'-0"	
C6	16	#4	3'-0"	
CLASS "X" CONCRETE			CU. YDS.	3.1
REINFORCEMENT BARS			LBS.	260
ALUMINUM HANDRAIL			L.F.	316

DESIGNED G.L.
CHECKED P.H.M.
DRAWN HJK
CHECKED P.H.M.

EXAMINED — ENGINEER OF BRIDGES AND TRAFFIC STRUCTURES
PASSED — ENGINEER OF DESIGN
APPROVED — HIGHWAY ENGINEER

HANDRAIL DETAILS

F.A. ROUTE 10 SECTION 13 HB-3

F.A. ROUTE 10 OVER S.B.I. ROUTE 24
STATION 83+67.13
TAZEWELL COUNTY

NOTES

All Posts shall be placed normal to parapet

All Posts shall be of Aluminum conforming to ASTM Specification B-108 alloy SG-70B-T6.

All Rail Tubing shall be of Aluminum conforming to ASTM Specification B-235 alloy GS-11A-T6.

Alclad Washers shall be made from sheet conforming to ASTM Specification B-209 alloy clad CG-42A-T4.

Rail Tubing may be cut to span 1, 2 or 3 post spaces

For material composition of Prefabricated Pad, See Art. 54.9 (f), (Bearings and Anchorage), of the Std. Specs.

Set Screws shall be of Aluminum conforming to ASTM Specification B-211 alloy CG-42A-T4.

WARREN AND VAN PRAAG, INC.
CONSULTING ENGINEERS - DECATUR, ILLINOIS

STATE OF ILLINOIS
DEPARTMENT OF PUBLIC WORKS & BUILDINGS
DIVISION OF HIGHWAYS

ROUTE NO.	SEC.	COUNTY	TOTAL SHEETS	SHEET NO.
F.A. RT. 10	13 HB-3	TAZEWELL	50	20
FED. ROAD DIST. No. 7	ILLINOIS	PROJECT	( )	

SH. NO 10 OF 12

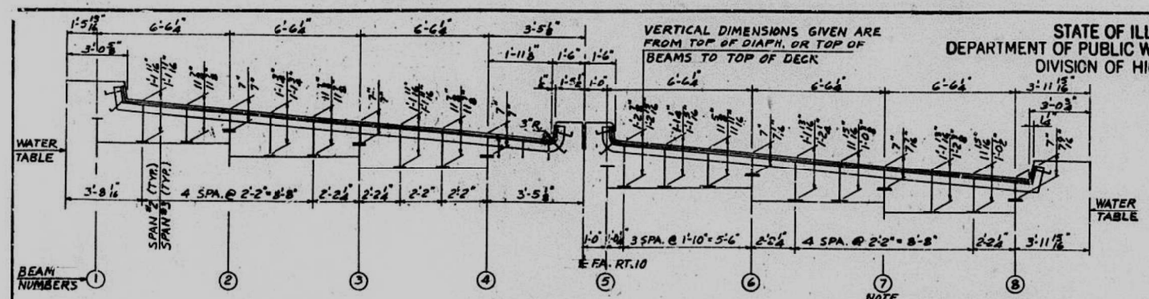

SECTION AT PIER NO. 2
STOOL SPACING & HEIGHTS

NOTE: STOOLS ARE TO BE CUT FROM WF SECTIONS. PROVIDE MIN. 10" FLANGE & MIN. 3/8" WEB. FURNISH (1) 1/16" & (1) 1/8" SHIM FOR EACH OF THE STOOLS IN ADDITION TO 4 NORMAL SHIMS.

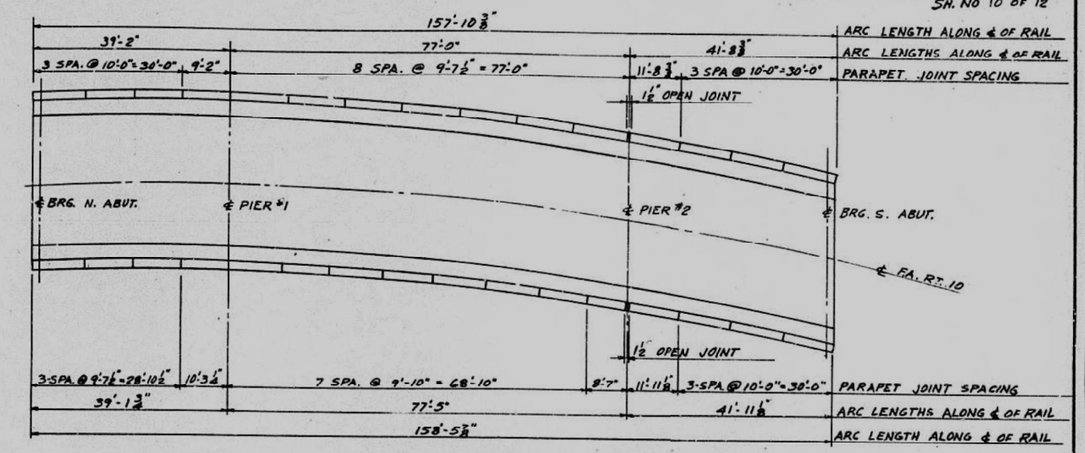

PLAN- CONSTRUCTION JOINT SPACING
FOR PARAPETS

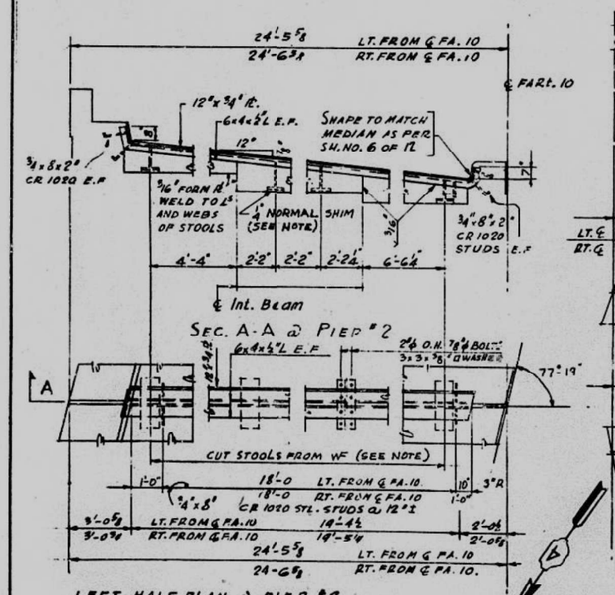

EXPANSION GUARDS. REFER TO SH. No 6 of 12 FOR CROSS SEC.
Right half plan not shown similar to left half by Rotation about ℄ FA. Rt. 10.

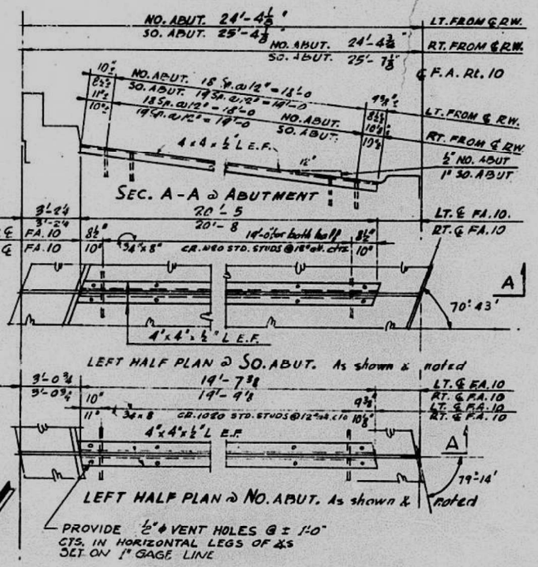

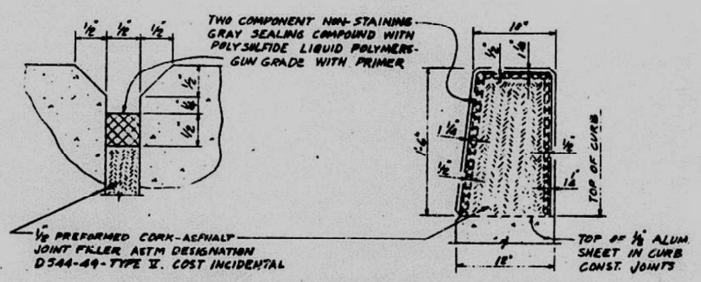

DETAIL OF JOINT IN PARAPET-TYPE HANDRAIL

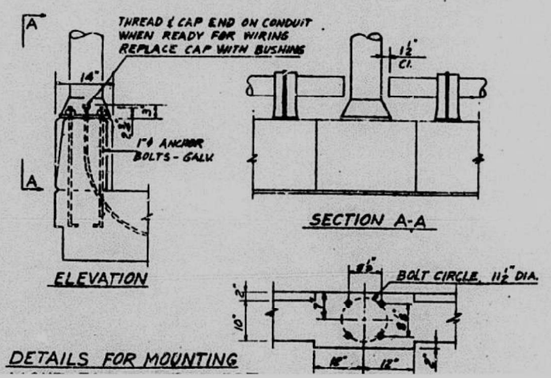

DETAILS FOR MOUNTING

DESIGNED	G.L. H.J.K.
CHECKED	H.Y.P.
DRAWN	G.L. H.J.K.

EXAMINED
ENGINEER OF BRIDGES AND TRAFFIC STRUCTURES
PASSED
ENGINEER OF DESIGN

MISCELLANEOUS DETAILS

F.A. ROUTE 10 SECTION 13-HB-3

F.A. ROUTE 10 OVER S.B.I. ROUTE 24
STATION 63+67.13
TAZEWELL COUNTY

MODEL: Default
FILE NAME: pw:\\ms-ussv.bentley.com:ms-ussv-pw03\Documents\Chicago IL\01 Projects\179740 IDOT Cedo\Sfx+ Path\5.0 CADD\CAD Sheets\ExistingStructurePlans-68C55-081.dgn

Michael Baker INTERNATIONAL
200 W Adams Street
Suite 1800
Chicago, IL 60606
P:+1 312.707.8770
FAX: 312.707.8804

USER NAME = DLamb	DESIGNED -	REVISED -	
	CHECKED -	REVISED -	
PLOT SCALE = 0.1667 ' / in.	DRAWN -	REVISED -	
PLOT DATE = 5/1/2023	CHECKED -	REVISED -	

STATE OF ILLINOIS
DEPARTMENT OF TRANSPORTATION

EXISTING STRUCTURES PLANS

SHEET S-81 OF S-85 SHEETS

F.A.P. RTE.	SECTION	COUNTY	TOTAL SHEETS	SHEET NO.
VAR.	13 (HVB, HB-3) BR-1:R	TAZEWELL	1173	522
		CONTRACT NO. 68C55		
		ILLINOIS	FED. AID PROJECT	

STATE OF ILLINOIS
DEPARTMENT OF PUBLIC WORKS & BUILDINGS
DIVISION OF HIGHWAYS

ROUTE No.	SEC.	COUNTY	TOTAL SHEETS	SHEET NO.
F.A. 10	13HB3	TAZEWELL	50	21
FED. ROAD DIST. No. 7	ILLINOIS	PROJECT	( )	

SH. NO. 11 OF 12

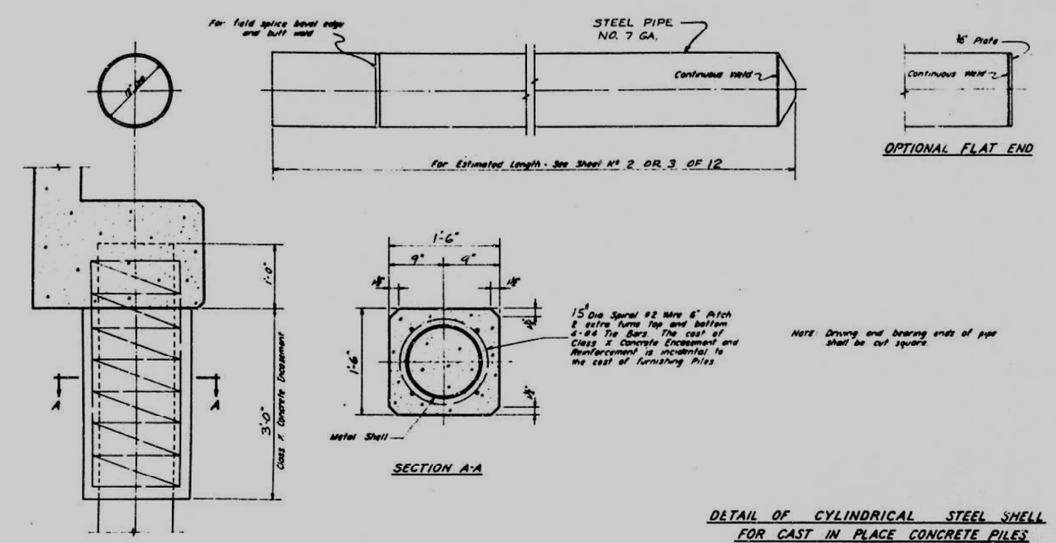

DETAIL OF CYLINDRICAL STEEL SHELL FOR CAST IN PLACE CONCRETE PILES

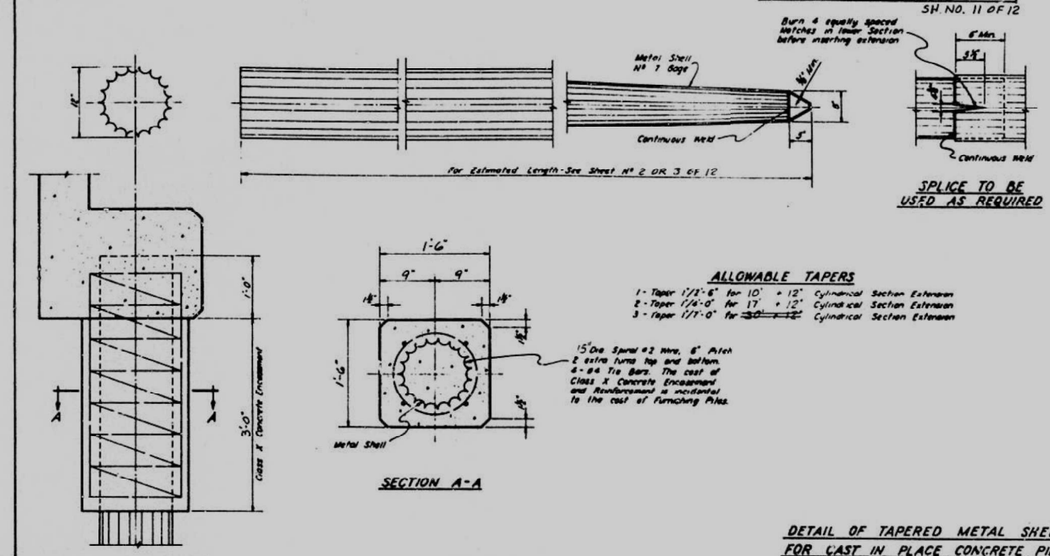

ALLOWABLE TAPERS

1 - Taper 1"/12'-6" for 10' + 12' Cylindrical Section Extension
2 - Taper 1"/6'-0" for 17' + 12' Cylindrical Section Extension
3 - Taper 1"/7'-0" for ~~30' + 12'~~ Cylindrical Section Extension

DETAIL OF TAPERED METAL SHELL FOR CAST IN PLACE CONCRETE PILES

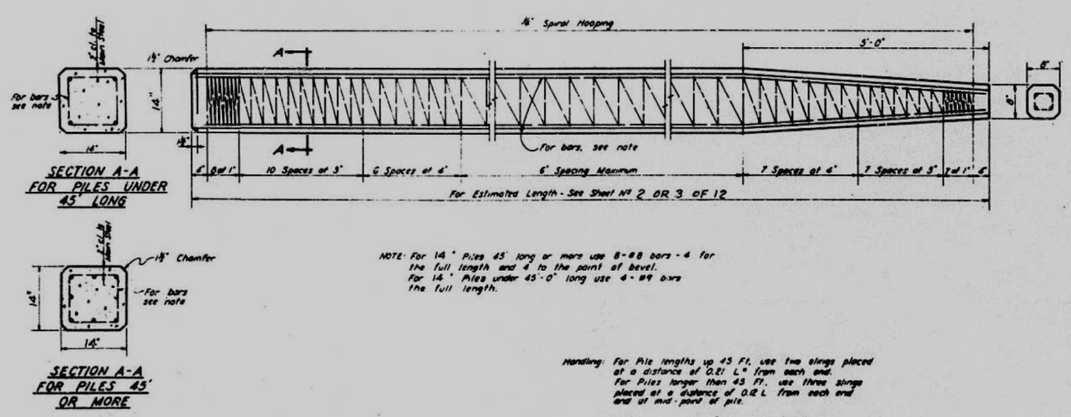

NOTE: For 14" Piles 45' long or more use 8-#8 bars - 4 for the full length and 4 to the point of bevel. For 14" Piles under 45'-0" long use 4-#9 bars the full length.

Handling: For Pile lengths up 45 Ft. use two slings placed at a distance of 0.21 L* from each end. For Piles longer than 45 Ft. use three slings placed at a distance of 0.12 L from each end and at mid-point of pile.

* L = Over all length of pile to be handled.

DESIGNED	P.M.
CHECKED	H.J.K.
DRAWN	H.J.K.
CHECKED	P.M.

EXAMINED — ENGINEER OF BRIDGES AND TRAFFIC STRUCTURES
PASSED — ENGINEER OF DESIGN
APPROVED — CHIEF HIGHWAY ENGINEER

DETAIL OF PRECAST CONCRETE PILES

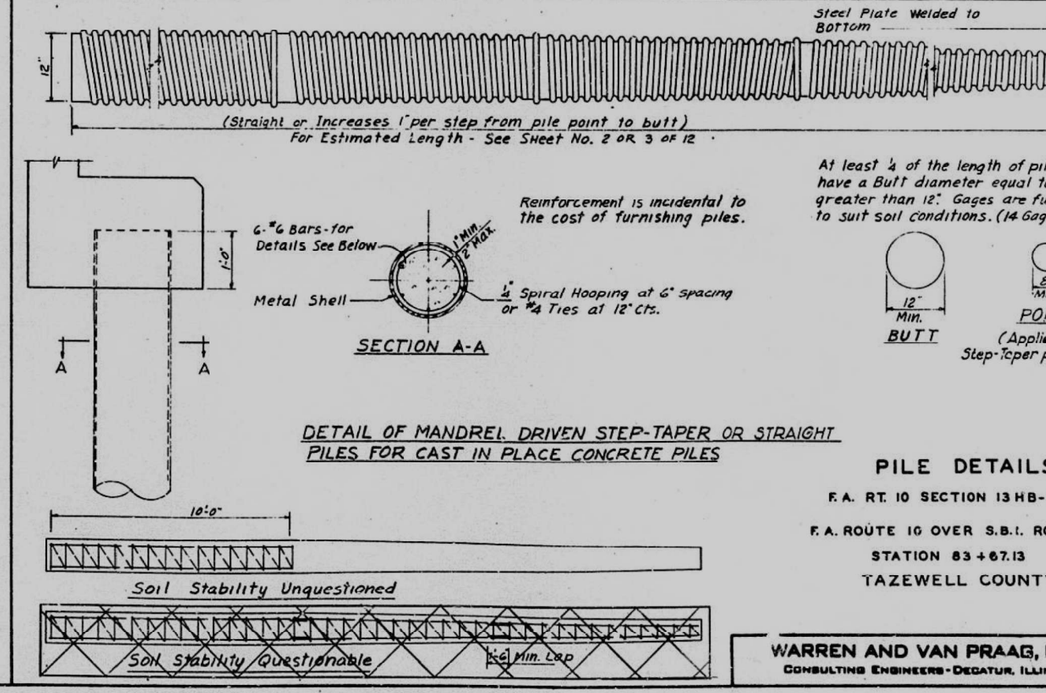

DETAIL OF MANDREL DRIVEN STEP-TAPER OR STRAIGHT PILES FOR CAST IN PLACE CONCRETE PILES

PILE DETAILS

F. A. RT. 10 SECTION 13 HB-3

F. A. ROUTE 10 OVER S.B.I. ROUTE 24

STATION 83 + 67.13

TAZEWELL COUNTY

WARREN AND VAN PRAAG, INC.
CONSULTING ENGINEERS - DECATUR, ILLINOIS

MODEL: Default
FILE NAME: pw:\\mb-us-pw.bentley.com:mb-us-pw-03\Documents\Chicago IL\01 Projects\179740 IDOT Ceda\SIEx Phil\5.0 CADD\CAD Sheets\ExistingStructurePlans-68C55-082.dgn

Michael Baker INTERNATIONAL
200 W Adams Street
Suite 1800
Chicago, IL 60606
PH: 312.707.8770
FAX: 312.707.8804

USER NAME = DLamb	DESIGNED -	REVISED -	
	CHECKED -	REVISED -	
PLOT SCALE = 0:2.0000 ':" / in.	DRAWN -	REVISED -	
PLOT DATE = 5/1/2023	CHECKED -	REVISED -	

STATE OF ILLINOIS
DEPARTMENT OF TRANSPORTATION

EXISTING STRUCTURES PLANS

SHEET S-82 OF S-85 SHEETS

F.A.P. RTE.	SECTION	COUNTY	TOTAL SHEETS	SHEET NO.
VAR.	13 (HVB, HB-3) BR-1:R	TAZEWELL	1173	523
		CONTRACT NO. 68C55		
	ILLINOIS	FED. AID PROJECT		

STATE OF ILLINOIS
DEPARTMENT OF PUBLIC WORKS & BUILDINGS
DIVISION OF HIGHWAYS

ROUTE No.	SEC.	COUNTY	TOTAL SHEETS	SHEET No.
F.A. RT. 10	13 HB 3	TAZEWELL	50	22
FED. ROAD DIST. No. 7	ILLINOIS	PROJECT		

SH. 12 OF 12

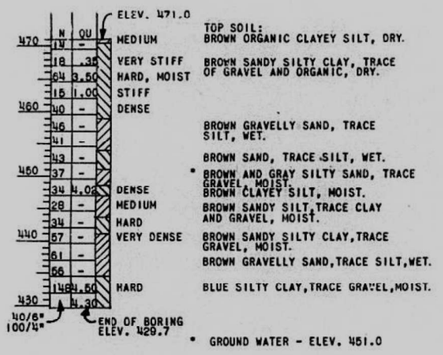

* GROUND WATER - ELEV. 451.0

BORING NO. 1

C.L. STA. 82+95.32

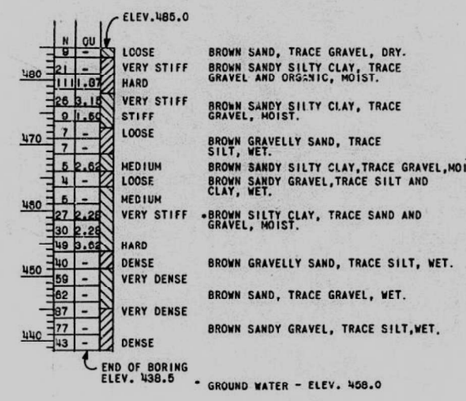

* GROUND WATER - ELEV. 458.0

BORING NO. 2

13.17 FT. RT. STA. 83+33.82

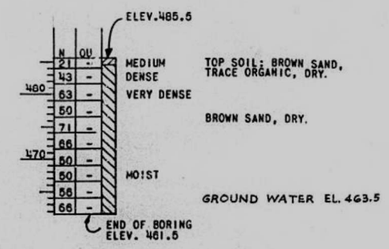

BORING NO. 3

13.69 FT. RT. STA. 84+08.86

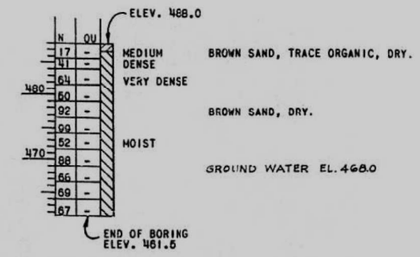

BORING NO. 4

84.7 FT. RT. STA. 84+19.48

NOTE: N=BLOWS PER FOOT OF PENETRATION OF SAMPLING SPOON. HAMMER WEIGHT = 140#, DROP = 30 INCHES.

QU=UNCONFINED COMPRESSIVE STRENGTH IN TONS PER SQUARE FOOT.

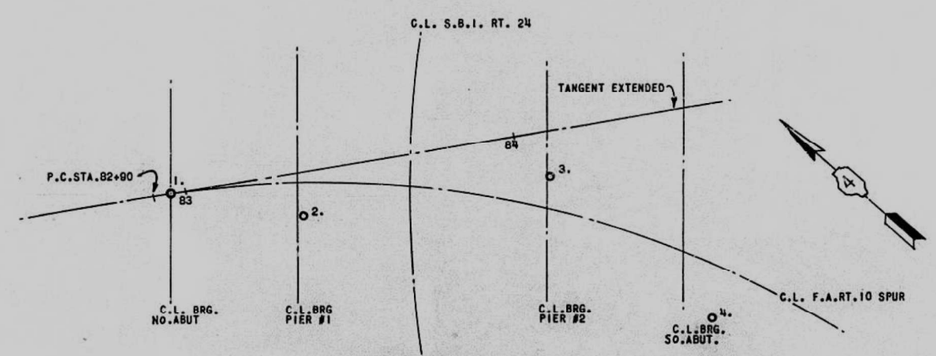

BORING PLAN

DESIGNED	H.E.K.
CHECKED	H.Y.F.
DRAWN	J.P.
CHECKED	H.Y.F.

EXAMINED
ENGINEER OF BRIDGES AND TRAFFIC STRUCTURES
PASSED
ENGINEER OF DESIGN
APPROVED
CHIEF HIGHWAY ENGINEER

SOIL BORINGS

F.A. ROUTE 10 SECTION 13 HB-3

F.A.ROUTE 10 OVER S.B.I. ROUTE 24
STATION 83+67.13
TAZEWELL COUNTY

WARREN AND VAN PRAAG, INC.
CONSULTING ENGINEERS - DECATUR, ILLINOIS

ROUTE No.	SEC.	COUNTY	TOTAL SHEETS	SHEET NO
FA 10	13-HB-3	TAZEWELL	50	23
FED. ROAD DIST. No. 7	ILLINOIS	PROJECT		

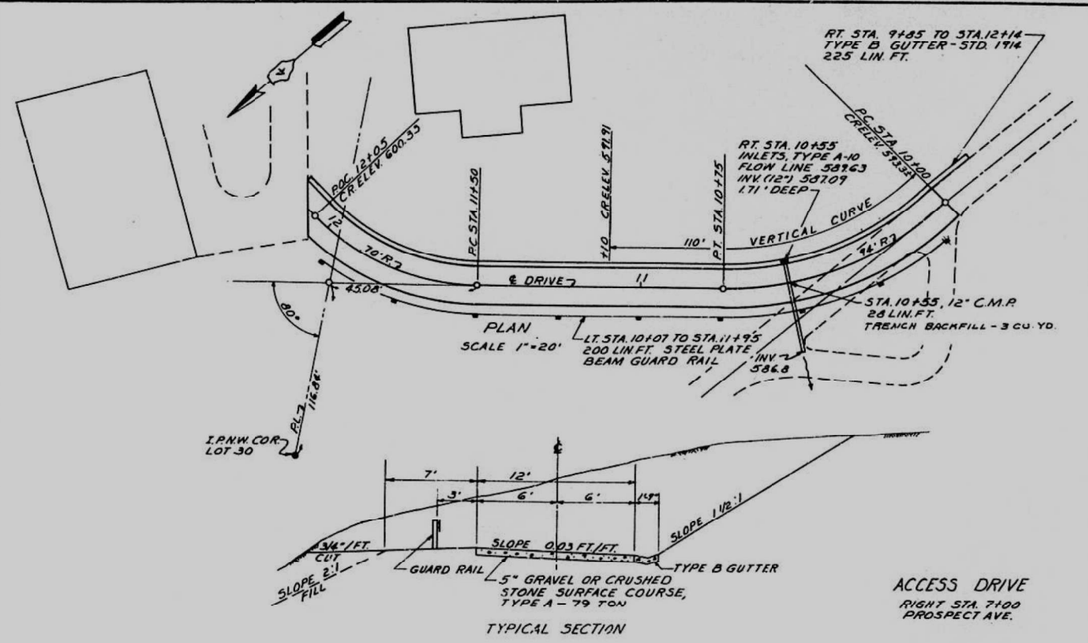

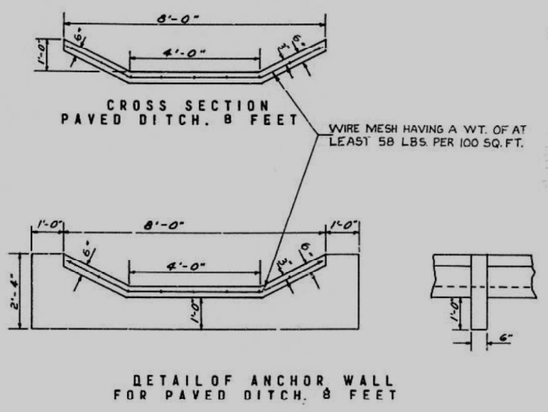

NOTE: PAVED DITCHES SHALL BE CONSTRUCTED OF CLASS X CONCRETE THROUGHOUT. ANCHOR WALLS SHALL BE PROVIDED AT 100 FOOT CENTERS AND SHALL BE MONOLITHIC WITH THE PAVED DITCH. PAVED DITCH SHALL BE PAID FOR AT THE CONTRACT UNIT PRICE PER LINEAL FOOT FOR PAVED DITCH, 8 FEET, WHICH PRICE SHALL INCLUDE PAYMENT FOR ANCHOR WALLS.

NOTE: THE WIRE MESH SHALL BE CONSIDERED INCIDENTAL TO THE CONTRACT UNIT PRICE PER LINEAL FOOT FOR "PAVED DITCH, 8'."

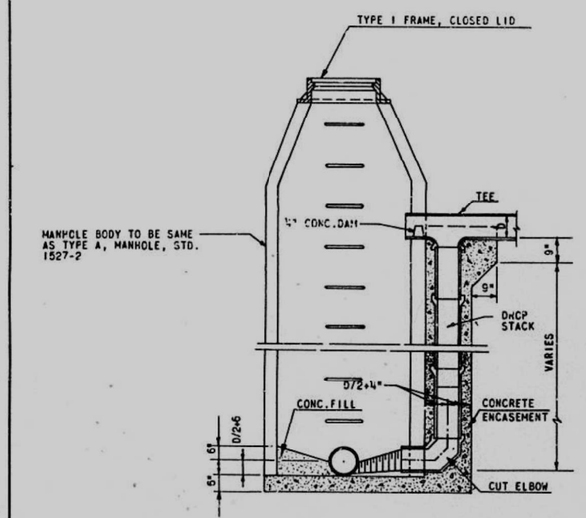

NOTE:
THE CONTRACT UNIT PRICE FOR MANHOLES, DROP TYPE, 4 FT. DIAMETER, TYPE 1 FRAME, CLOSED LID SHALL INCLUDE THE FRAME, COVER AND DROP STACK AND NO ADDITIONAL COMPENSATION WILL BE ALLOWED.

DROP MANHOLE
OAKDALE AVE. SANITARY SEWER

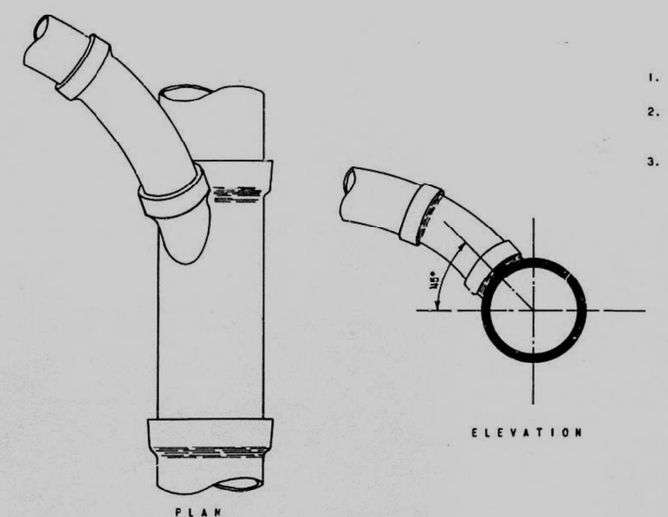

STUB CONNECTION DETAIL
NO SCALE

GENERAL NOTES

1. STUB SHALL CONSIST OF A STANDARD "Y" BRANCH AND SUITABLE STRAIGHT PIPE, CURVES AND STOPPERS.
2. NEW CONNECTIONS SHALL BE MADE WITH PIPE NOT LESS THAN THE SIZE EXISTING IN PRESENT CONNECTION.
3. WHERE DIFFERENCE IN ELEVATION BETWEEN THE EXISTING HOUSE CONNECTION, AT THE POINT WHERE CONNECTION TO LATERAL IS TO BE MADE, AND THE LATERAL IS EXCESSIVE: STRAIGHT LENGTHS OF PIPE MAY BE INSTALLED BETWEEN THE "Y" BRANCH AND THE FIRST CURVED SECTION.

ROUTE No.	SEC.	COUNTY	TOTAL SHEETS	SHEET NO.
F.A.-10	13HB-3	TAZEWELL	50	24
FED. ROAD DIST. No. 7	ILLINOIS	PROJECT		

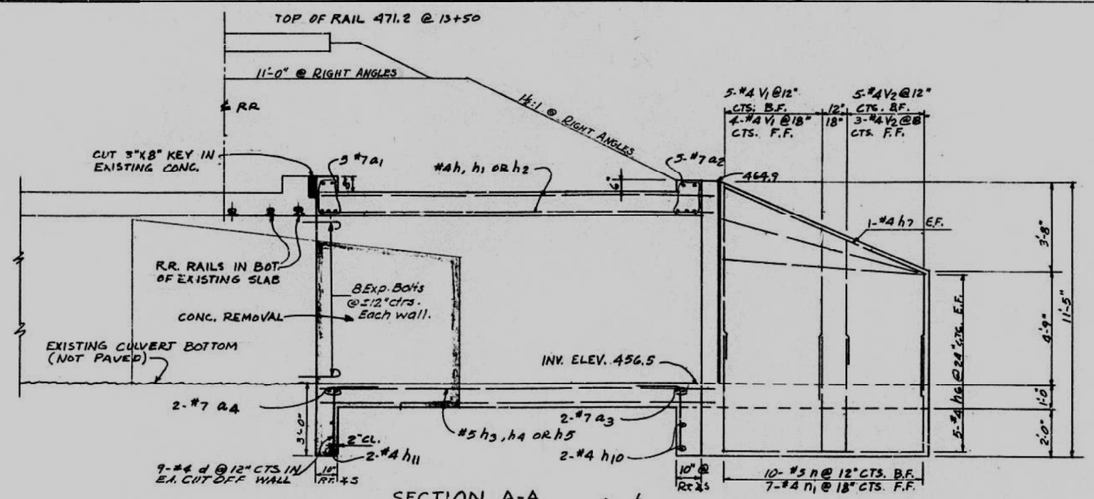

SECTION A-A

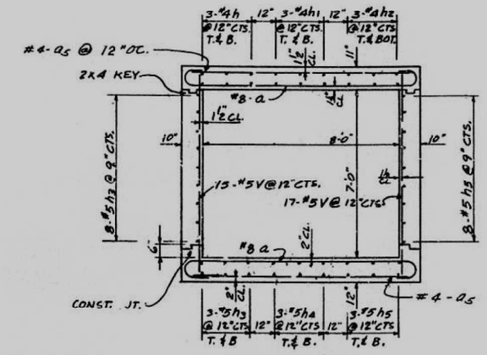

SECTION C-C

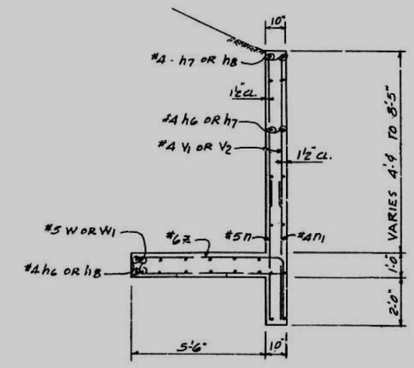

SECTION B-B

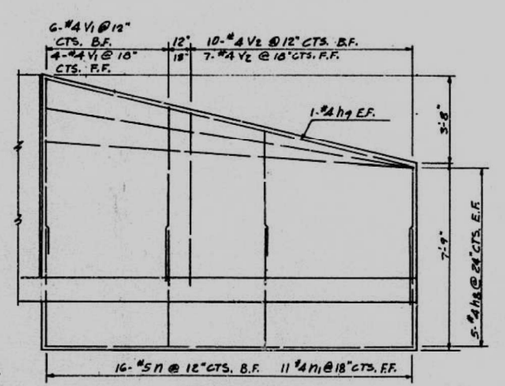

SECTION D-D

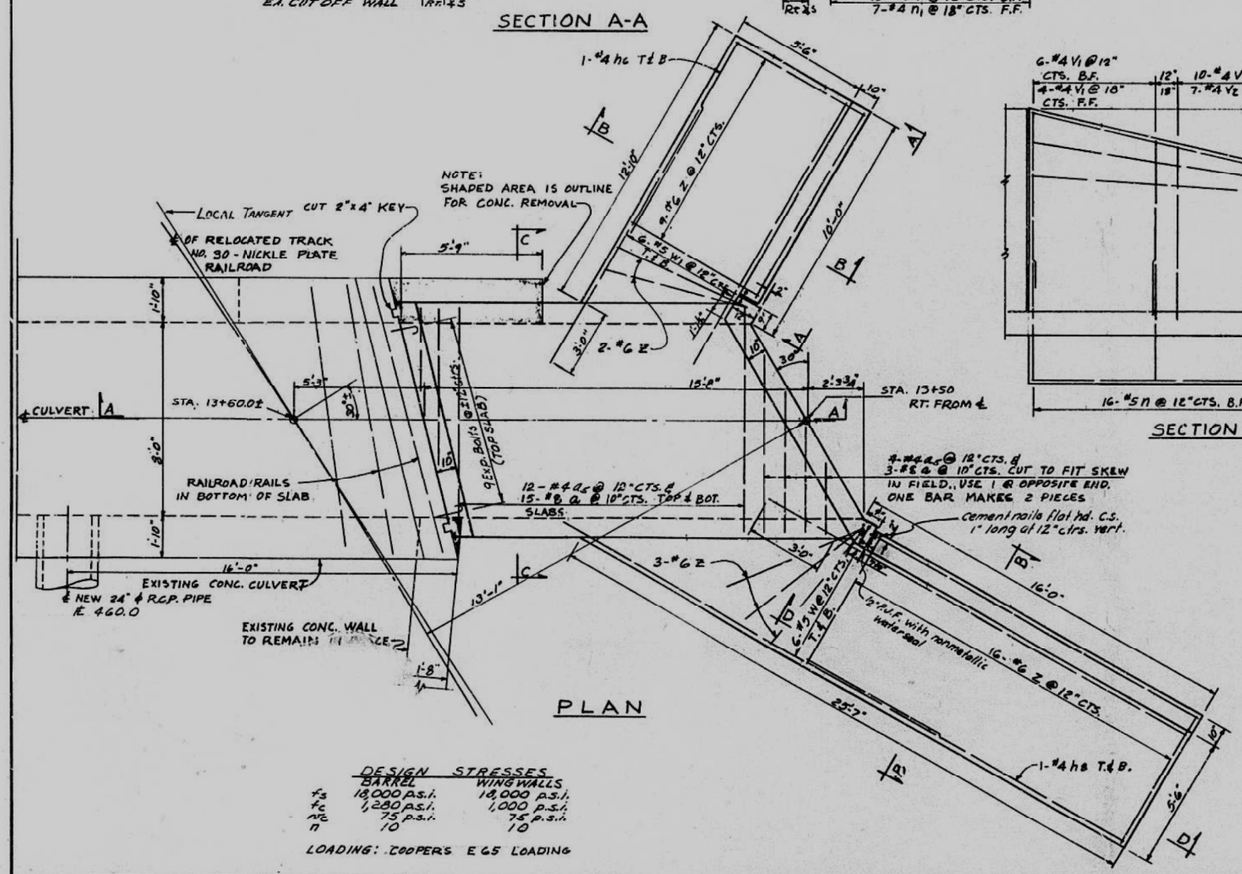

PLAN

DESIGN STRESSES	BARREL	WINGWALLS
f_s	18,000 p.s.i.	18,000 p.s.i.
f_c	1,280 p.s.i.	1,000 p.s.i.
v_c	75 p.s.i.	75 p.s.i.
n	10	10

LOADING: COOPER'S E 65 LOADING

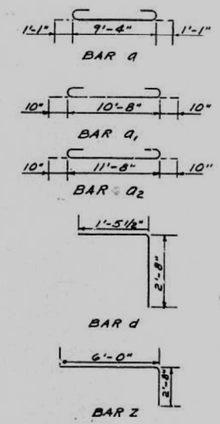

BILL OF MATERIAL

BAR	NO.	SIZE	LENGTH	SHAPE
a	38	#8	11'-4"	
a_1	5	#7	12'-4"	
a_2	5	#7	13'-4"	
a_3	2	#7	11'-8"	
a_4	2	#7	10'-8"	
a_5	22	#4	8'-8"	
d	18	#4	4'-0"	
h	3	#4	14'-0"	
h_1	3	#4	15'-0"	
h_2	3	#4	16'-0"	
h_3	8	#5	14'-0"	
h_4	3	#5	15'-0"	
h_5	11	#5	16'-0"	
h_6	12	#4	9'-10"	
h_7	2	#4	9'-6"	
h_8	12	#4	12'-11"	
h_9	2	#4	13'-4"	
h_{10}	2	#4	11'-8"	
h_{11}	2	#4	10'-8"	
n	26	#5	5'-4"	
n_1	18	#4	3'-8"	
v	32	#5	8'-7"	
v_1	14	#4	6'-9"	
v_2	25	#4	3'-2"	
w	12	#5	13'-6"	
w_1	12	#5	12'-6"	
z	30	#6	8'-6"	
CLASS X CONCRETE			CU.YD.	33.6
REINFORCEMENT BARS			LBS.	3850
CONCRETE REMOVAL			CU.YD.	3.7
Expansion Bolts "6"			EACH	25

GENERAL NOTES

CONCRETE REMOVAL SHALL BE IN ACCORDANCE WITH ART. 49 OF THE STANDARD SPECIFICATIONS.

CLASS X CONCRETE SHALL BE USED THROUGHOUT.

EXPOSED EDGES SHALL HAVE 3/4" CHAMFER.

ALL LAP SPLICES SHALL BE 20 BAR DIAMETERS UNLESS OTHERWISE SHOWN.

ALL BARS SHALL BE ROUND ASTM A305-49. THE SIZE NUMBER IS THE NUMBER OF 1/8 INCHES IN THE NOMINAL DIAMETER. THE COST OF FURNISHING AND INSTALLING CEMENT NAILS AND PREM. JOINT FILLER SHALL BE INCLUDED IN CONTRACT UNIT PRICE FOR CLASS X CONCRETE.

Furnishing the expansion bolts, drilling holes, and installing the bolts complete in place will be paid for at the contract unit price each for EXPANSION BOLTS. (See Art. 49.6 of the standard Specifications). Bolts to extend a minimum of 6" into new concrete.

CULVERT EXTENSION
F.A. Rte. 10 SEC 13HB-3
TAZEWELL COUNTY
STA 13+60±

SCALE 3/8"=1'-0"

WARREN AND VAN PRAAG, INC.
CONSULTING ENGINEERS - DECATUR, ILLINOIS

MODEL: Default
FILE NAME: pw:\\mbsusw.bentley.commbs-uspw03\Documents\Chicago IL\01 Projects\179740 IDOT Ceda\SEx1 Phl15.0 CADD\CAD Sheets\ExistingStructurePlans-68C55-085.dgn

Michael Baker INTERNATIONAL
200 W Adams Street
Suite 1800
Chicago, IL 60606
P:+1 312.707.8770
FAX: 312.707.8804

USER NAME = DLamb	DESIGNED -	REVISED -	
	CHECKED -	REVISED -	
PLOT SCALE = 0:2.0000 ':" / in.	DRAWN -	REVISED -	
PLOT DATE = 5/1/2023	CHECKED -	REVISED -	

STATE OF ILLINOIS
DEPARTMENT OF TRANSPORTATION

EXISTING STRUCTURES PLANS

SHEET S-85 OF S-85 SHEETS

F.A.P. RTE.	SECTION	COUNTY	TOTAL SHEETS	SHEET NO.
VAR.	13 (HVB, HB-3) BR-1;R	TAZEWELL	1173	526
		CONTRACT NO. 68C55		
		ILLINOIS	FED. AID PROJECT	

Bench Mark: Chiseled square on SE wingwall of S.N. 090-0034, Sta. ±81+82.00, Elev=505.64

Existing structure: Structure No. 090-0034, built in 1966 as F.A. Route 10, Sections 13-VB, 13-V(F,E), and 13-VD at Station 78+28.29. Structure consists of a 4-span steel 84" web welded plate girder superstructure unit, a 2-span steel 33WF superstructure unit along Ramp A & B, a 3-span steel 27WF superstructure unit along Ramp C, and a 2-span steel 30WF superstructure unit along Ramp D. Superstructure is supported by pile bent abutments founded on concrete piles and concrete column piers founded on concrete piles. Bridge length is 705-10" back-to-back abutments and width varies from 23'-0" to 88'-0". The structure is to be removed and replaced. Traffic is to be detoured.

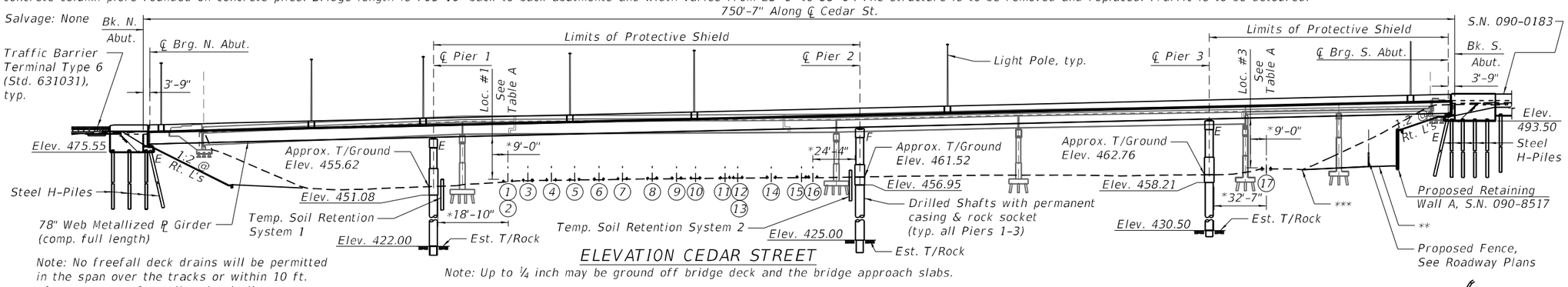

Note: No freefall deck drains will be permitted in the span over the tracks or within 10 ft. of cross arms of a railroad pole line.

ELEVATION CEDAR STREET

Note: Up to ¼ inch may be ground off bridge deck and the bridge approach slabs.

DESIGN SPECIFICATIONS

2020 AASHTO LRFD Bridge Design Specifications, 9th Edition

DESIGN STRESSES

FIELD UNITS

f'c = 4,000 psi (Superstructure)
f'c = 3,500 psi
f'c = 4,000 psi (Drilled Shafts)
fy = 60,000 psi (Reinforcement)
fy = 50,000 psi (M270 Grade 50)

LOADING HL-93

Allow 50#/sq. ft. for future wearing surface.

* at right angles to track

** grading for the construction of future Multi-Use Path

*** the existing ditch SE of Track #17 shall be cleaned out and restored to provide positive drainage

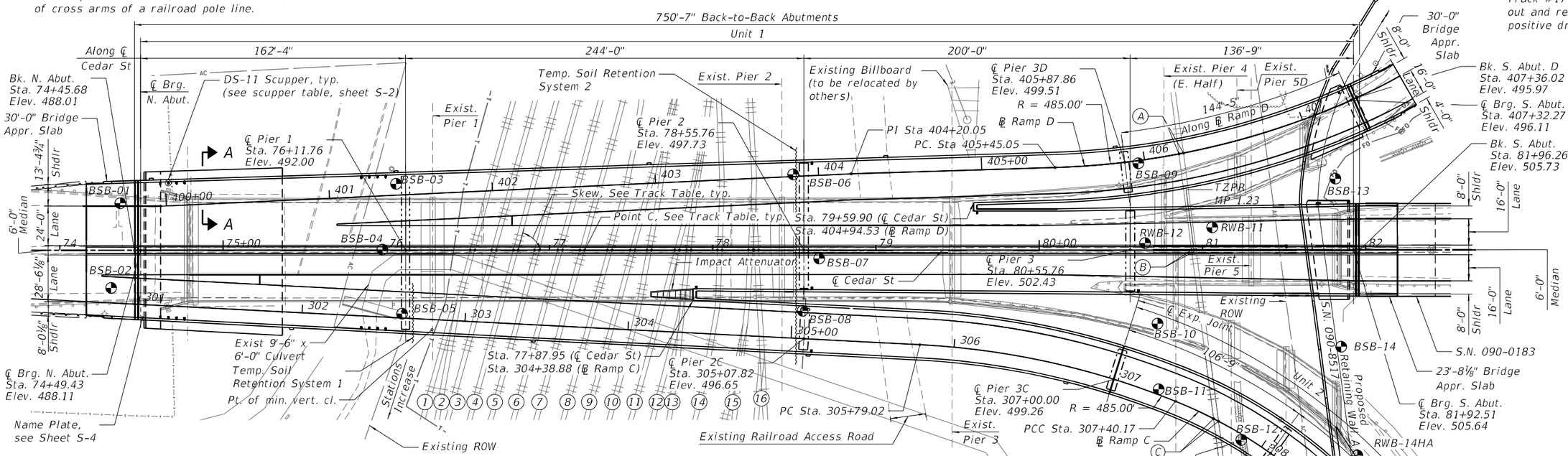

PLAN

TABLE A

	Minimum Required Vertical Clearance	Calculated Vertical Clearance
Loc. #1	23'-0"	23'-2"
Loc. #2	23'-0"	24'-4"
Loc. #3	23'-0"	27'-7"
Loc. #4	23'-0"	23'-5"

APPROVED
For Structural Adequacy Only
Engineer of Bridges & Structures

Signed Joseph M. Kauzlarich
IL Lic. No. 081-007934
Expires 11-30-2024

Date 6/8/2023

STATE OF ILLINOIS
JOSEPH M. KAUZLARICH
081-007934
LICENSED STRUCTURAL ENGINEER

LEGEND

Soil Boring Location

SEISMIC DATA

Seismic Performance Zone (SPZ) = 1
Design Spectral Acceleration at 1.0 sec. (SD1) = 0.079
Design Spectral Acceleration at 0.2 sec. (SDS) = 0.132
Soil Site Class = C

(A): Sta. 00+40.87 (North Rail Track 17) = Sta. 406+20.21 (℄ Ramp D)
Sta. 00+39.92 (South Rail Track 17) = Sta. 406+25.14 (℄ Ramp D)
(B): Sta. 01+00.00 (North Rail Track 17) = Sta. 80+92.08 (℄ Cedar St.)
Sta. 01+00.00 (South Rail Track 17) = Sta. 80+97.10 (℄ Cedar St.)
(C): Sta. 02+03.67 (North Rail Track 17) = Sta. 307+64.50 (℄ Ramp C)
Sta. 02+06.45 (South Rail Track 17) = Sta. 307+70.49 (℄ Ramp C)

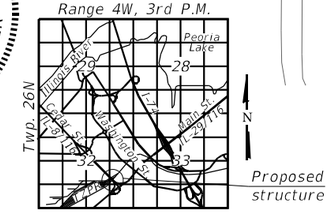

LOCATION SKETCH

GENERAL PLAN AND ELEVATION CEDAR STREET EXTENSION OVER TAZEWELL & PEORIA RAILROAD

F.A.P. 669 - SECTION 13(HVB, HB-3) BR
TAZEWELL COUNTY
STATION 78+20.97
STRUCTURE NO. 090-0182

Michael Baker INTERNATIONAL
200 W Adams Street Suite 1800 Chicago, IL 60606 P: 312.707.8970 FAX: 312.707.8804

USER NAME = DLamb	DESIGNED - JMK	REVISED -	
	CHECKED - JTB	REVISED -	
PLOT SCALE = 66.6664 ' / in.	DRAWN - DMJ	REVISED -	
PLOT DATE = 5/8/2023	CHECKED - JTB	REVISED -	

STATE OF ILLINOIS
DEPARTMENT OF TRANSPORTATION

SHEET S-1 OF S-194 SHEETS

F.A.P. RTE.	SECTION	COUNTY	TOTAL SHEETS	SHEET NO.
VAR.	13 (HVB, HB-3) BR-1:R	TAZEWELL	1173	527
		CONTRACT NO. 68C55		
	ILLINOIS	FED. AID PROJECT		

MODEL: Default
FILE NAME: pw:\\ms-us-cw.pwmibus-pw.bentley.com:mibus-pw-03\Documents\Chicago IL\01 Projects\179740 IDOT Cedar\Sfxt Pkl\5.0 CADD\CAD Sheets\090\182-68C55-001-GDF.dgn

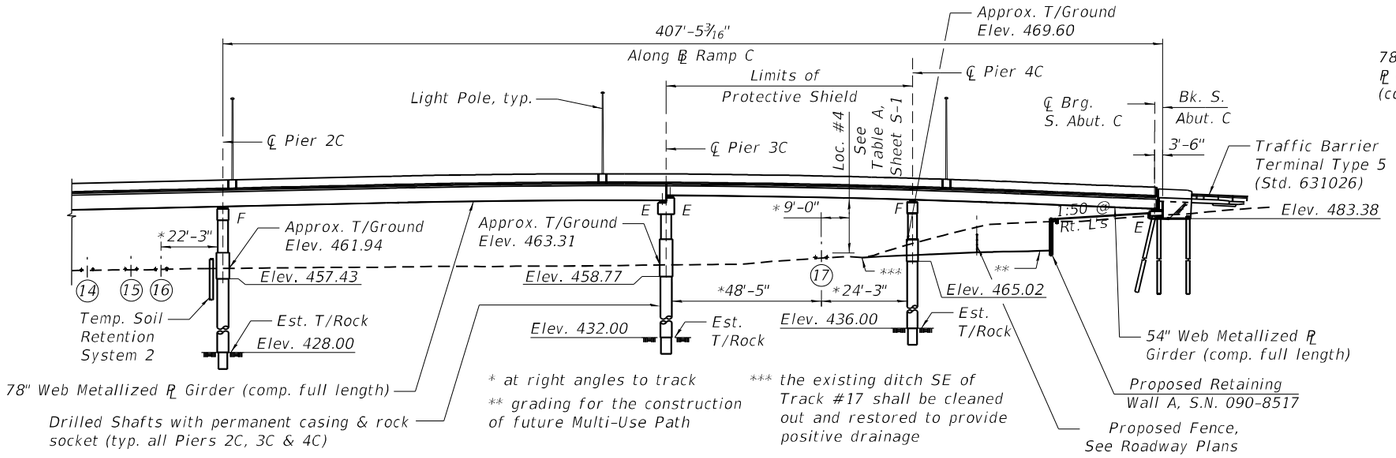

ELEVATION - RAMP C

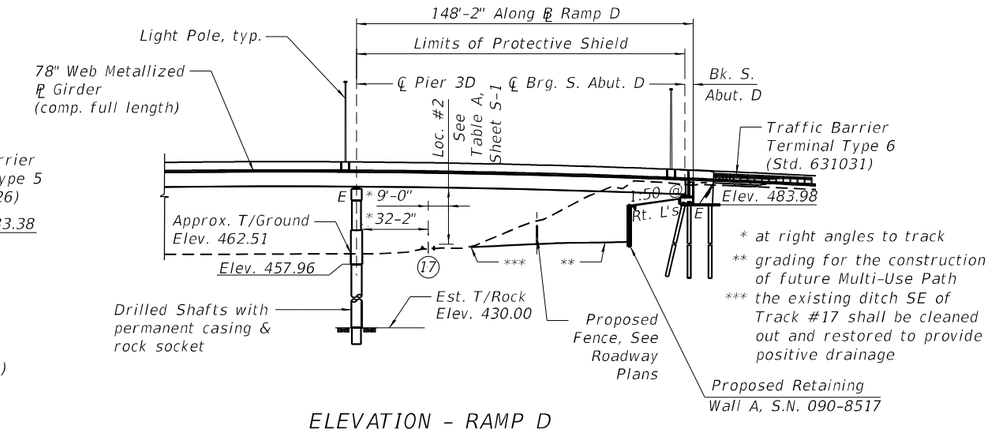

ELEVATION - RAMP D

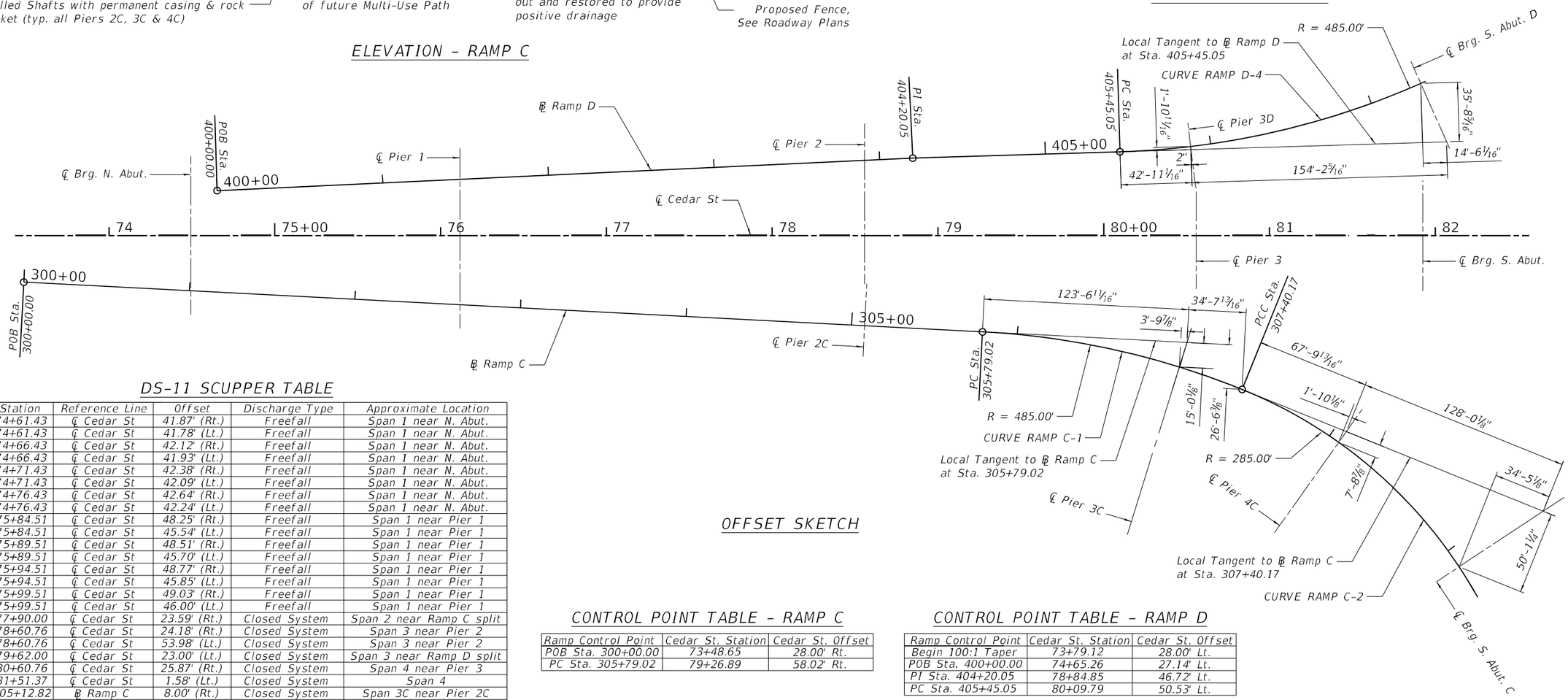

OFFSET SKETCH

DS-11 SCUPPER TABLE

ID	Station	Reference Line	Offset	Discharge Type	Approximate Location
1	74+61.43	℄ Cedar St	41.87' (Rt.)	Freefall	Span 1 near N. Abut.
2	74+61.43	℄ Cedar St	41.78' (Lt.)	Freefall	Span 1 near N. Abut.
3	74+66.43	℄ Cedar St	42.12' (Rt.)	Freefall	Span 1 near N. Abut.
4	74+66.43	℄ Cedar St	41.93' (Lt.)	Freefall	Span 1 near N. Abut.
5	74+71.43	℄ Cedar St	42.38' (Rt.)	Freefall	Span 1 near N. Abut.
6	74+71.43	℄ Cedar St	42.09' (Lt.)	Freefall	Span 1 near N. Abut.
7	74+76.43	℄ Cedar St	42.64' (Rt.)	Freefall	Span 1 near N. Abut.
8	74+76.43	℄ Cedar St	42.24' (Lt.)	Freefall	Span 1 near N. Abut.
9	75+84.51	℄ Cedar St	48.25' (Rt.)	Freefall	Span 1 near Pier 1
10	75+84.51	℄ Cedar St	45.54' (Lt.)	Freefall	Span 1 near Pier 1
11	75+89.51	℄ Cedar St	48.51' (Rt.)	Freefall	Span 1 near Pier 1
12	75+89.51	℄ Cedar St	45.70' (Lt.)	Freefall	Span 1 near Pier 1
13	75+94.51	℄ Cedar St	48.77' (Rt.)	Freefall	Span 1 near Pier 1
14	75+94.51	℄ Cedar St	45.85' (Lt.)	Freefall	Span 1 near Pier 1
15	75+99.51	℄ Cedar St	49.03' (Rt.)	Freefall	Span 1 near Pier 1
16	75+99.51	℄ Cedar St	46.00' (Lt.)	Freefall	Span 1 near Pier 1
17	77+90.00	℄ Cedar St	23.59' (Rt.)	Closed System	Span 2 near Ramp C split
18	78+60.76	℄ Cedar St	24.18' (Rt.)	Closed System	Span 3 near Pier 2
19	78+60.76	℄ Cedar St	53.98' (Lt.)	Closed System	Span 3 near Pier 2
20	79+62.00	℄ Cedar St	23.00' (Lt.)	Closed System	Span 3 near Ramp D split
21	80+60.76	℄ Cedar St	25.87' (Rt.)	Closed System	Span 4 near Pier 3
22	81+51.37	℄ Cedar St	1.58' (Lt.)	Closed System	Span 4
23	305+12.82	℄ Ramp C	8.00' (Rt.)	Closed System	Span 3C near Pier 2C
24	309+06.75	℄ Ramp C	8.00' (Rt.)	Closed System	Span 5C near S. Abut. C
25	407+26.27	℄ Ramp D	8.00' (Lt.)	Closed System	Span 4D near S. Abut. D

Note: see sheet S-93 for scupper details

CONTROL POINT TABLE - RAMP C

Ramp Control Point	Cedar St. Station	Cedar St. Offset
POB Sta. 300+00.00	73+48.65	28.00' Rt.
PC Sta. 305+79.02	79+26.89	58.02' Rt.

CONTROL POINT TABLE - RAMP D

Ramp Control Point	Cedar St. Station	Cedar St. Offset
Begin 100:1 Taper	73+79.12	28.00' Lt.
POB Sta. 400+00.00	74+65.26	27.14' Lt.
PI Sta. 404+20.05	78+84.85	46.72' Lt.
PC Sta. 405+45.05	80+09.79	50.53' Lt.

Michael Baker INTERNATIONAL
200 W Adams Street Suite 1800 Chicago, IL 60606 P:+1 312.707.8770 FAX: 312.707.8804

USER NAME = DLamb	DESIGNED - JMK	REVISED -	
	CHECKED - JTB	REVISED -	
PLOT SCALE = 66.6664 ' / in.	DRAWN - DMJ	REVISED -	
PLOT DATE = 6/6/2023	CHECKED - JTB	REVISED -	

STATE OF ILLINOIS
DEPARTMENT OF TRANSPORTATION

GENERAL PLAN & ELEVATION 2
STRUCTURE NO. 090-0182

SHEET S-2 OF S-194 SHEETS

F.A.P. RTE.	SECTION	COUNTY	TOTAL SHEETS	SHEET NO.
VAR.	13 (HVB, HB-3) BR-1:R	TAZEWELL	1173	528
		CONTRACT NO. 68C55		
	ILLINOIS	FED. AID PROJECT		

MODEL: Default
FILE NAME: pw:\\mi-uscv.bentley.com:mi-uscv-pw03\Documents\Chicago IL\01 Projects\179740 IDOT Ceds/Sfxt PhII\5.0 CADD\CAD Sheets\0900182-68C55-002-GPE.dgn

INDEX OF SHEETS

GENERAL NOTES

1. Fasteners shall be hot-dip galvanized ASTM F3125 Grade A325 Type 1, bolts 7/8 in. ∅, holes 15/16 in. ∅, unless otherwise noted. See special provision Hot-Dip Galvanizing for Structural Steel.

2. Calculated weight of Structural Steel (LT Unit 1) = 2,298,050 LBS
Calculated weight of Structural Steel (RT Unit 1) = 2,289,470 LBS
Calculated weight of Structural Steel (Unit 2) = 272,760 LBS

3. All plate girder segments shall be metalized;
see special provision Metalizing of Structural Steel.
All remaining structural steel shall be galvanized;
see special provision Hot-Dip Galvanizing for Structural Steel.

4. No field welding is permitted except as specified in the contract documents.

5. Reinforcement bars designated (E) shall be epoxy coated.

6. If the Contractor elects to use cantilever forming brackets on the exterior beams or girders, the brackets shall be placed at the same locations as required for the hardwood blocks in Article 503.06(b) of the Standard Specifications. If additional cantilever forming brackets are required, hardwood blocking shall be wedged between the exterior and first interior beam at each of these additional bracket locations.

7. Bearing seat surfaces shall be constructed or adjusted to the designated elevations within a tolerance of 1/8 inch (0.01 ft.). Adjustment shall be made either by grinding the surface or by shimming the bearings.

8. Concrete Sealer shall be applied to the designated areas of the abutments and Pier 3C.

9. The existing structural steel coating contains lead. The Contractor shall take appropriate precautions to deal with the presence of lead on this project.

10. The embankment configuration shown on sheets S-1 & S-2 shall be the minimum that must be placed and compacted prior to construction of the abutments.

11. Payment for superstructure temporary bracing, falsework required for superstructure framing erection, the erection plan, calculations, etc. is included in the cost of furnishing and erecting structural steel. The temporary bracing and/or falsework for superstructure framing erection, if required, are to be designed using AASHTO guide specifications for bridge temporary work, latest edition.

12. The deck pouring sequence shown on the plans has been used to design the required beam camber and to determine the "theoretical grade elevations adjusted for dead load deflection and grinding" used in the calculation of fillet heights, "t". Requests for changes to the plan pouring sequence shall be submitted in writing prior to ordering of steel. Modifications, either to the camber diagrams or the "theoretical grade elevations adjusted for dead load deflection and grinding", resulting from changes to the plan pouring sequence shall be the responsibility of the contractor. All required plans shall be submitted with the request and shall be sealed by an Illinois licensed structural engineer.

13. Slipforming of the parapets is not allowed.

14. The Contractor shall field verify exact location of all existing utilities prior to construction and take precautions not to damage existing utilities during drilled shaft installation, excavations, footing construction, or other underground work. Any such damage shall be repaired by the Contractor at no additional cost.

15. The Contractor shall field verify exact location of existing culvert to remain prior to construction and take precautions not to damage existing culvert during shaft installation, excavations, footing construction, or other underground work. Any such damage shall be repaired by the Contractor at no additional cost.

16. The Contractor shall retain the services of an engineering firm, prequalified in the IDOT consultant selection category of Highway Bridges Advanced Typical, for preparation of the Structural Assessment Report(s). Contractor's pre-approval shall not be applicable for this project. See Special Provision.

17. Current Ratings on File for Existing Structure:
Inventory: HS-43
Operating: HS-73
Live Load Restrictions: No

18. Inventory and Operating Ratings and Live Load Restrictions are provided for information only. Inventory and Operating Ratings are based on HS loading and configuration. Live Load Restrictions are based on Illinois legal loads and configurations. The Ratings and Live Load Restrictions are not necessarily representative of capacities to support the Contractor's equipment.

19. Calculated area of Protective Shield:

Structure Removal:
Existing Span 2 = 1,507 Sq. Yd.
Existing Span 5 = 459 Sq. Yd.
Total = 1,966 Sq. Yd.

Structure Construction:
Proposed Span 2 = 2,912 Sq. Yd.
Proposed Span 4 = 1,708 Sq. Yd.
Total = 4,620 Sq. Yd.

20. The existing bearings contain lead plates. The Contractor shall take precautions to deal with the presence of lead on this project.

TOTAL BILL OF MATERIAL

	ITEM	UNIT	SUPER	SUB	TOTAL
	Removal of Existing Structures No. 1	Each	---	---	1
*	Protective Shield	Sq. Yd.	6,586	---	6,586
	Structure Excavation	Cu. Yd.	---	1,547	1,547
	Concrete Structures	Cu. Yd.	---	1,839.4	1,839.4
	Concrete Superstructure	Cu. Yd.	2,809.3	---	2,809.3
	Concrete Encasement	Cu. Yd.	10.3	25.3	35.6
	Protective Coat	Sq. Yd.	10,986	---	10,986
	Concrete Superstructure (Approach Slab)	Cu. Yd.	269.2	---	269.2
	Furnishing and Erecting Structural Steel	L Sum	0.89	---	0.89
	Stud Shear Connectors	Each	27,349	---	27,349
	Reinforcement Bars	Pound	---	98,890	98,890
	Reinforcement Bars, Epoxy Coated	Pound	811,820	400,490	1,212,310
**	Bar Splicers	Each	---	86	86
	Slope Wall 4 Inch	Sq. Yd.	---	1,038	1,038
	Furnishing Steel Piles HP12x53	Foot	1,238	4,050	5,288
	Driving Piles	Foot	1,238	4,050	5,288
	Test Pile Steel HP12x53	Each	4	3	7
	Pile Shoes	Each	---	72	72
	Name Plates	Each	1	---	1
	Permanent Casing	Foot	---	735	735
	Drilled Shaft in Soil	Cu. Yd.	---	489.3	489.3
	Drilled Shaft in Rock	Cu. Yd.	---	114.4	114.4
	Preformed Joint Seal 2 1/2"	Foot	746	---	746
	Preformed Joint Strip Seal	Foot	31	---	31
	Elastomeric Bearing Assembly, Type II	Each	20	---	20
	Anchor Bolts, 1 1/2"	Each	---	228	228
	Anchor Bolts, 2"	Each	---	88	88
	Temporary Soil Retention System	Sq. Ft.	---	702	702
	Drainage System for Structures	L. Sum	1	---	1
	Granular Backfill for Structures	Cu. Yd.	---	602	602
	Concrete Sealer	Sq. Ft.	---	5,005	5,005
	Geocomposite Wall Drain	Sq. Yd.	---	306	306
	Pipe Underdrains for Structures 4"	Foot	---	324	324
	Drainage Scuppers, DS-11	Each	25	---	25
	Diamond Grinding (Bridge Section)	Sq. Yd.	9,181	---	9,181
	Modular Expansion Joint 6"	Foot	205	---	205
	Bridge Deck Grooving (Longitudinal)	Sq. Yd.	5,242	---	5,242
	High Load Multi-Rotational Bearings, Pot, Fixed-500K	Each	4	---	4
	High Load Multi-Rotational Bearings, Pot, Fixed-700K	Each	12	---	12
	High Load Multi-Rotational Bearings, Pot, Fixed-900K	Each	4	---	4
	High Load Multi-Rotational Bearings, Pot, Non-Guided Expansion-400K	Each	1	---	1
	High Load Multi-Rotational Bearings, Pot, Guided Expansion-300K	Each	12	---	12
	High Load Multi-Rotational Bearings, Pot, Guided Expansion-400K	Each	3	---	3
	High Load Multi-Rotational Bearings, Pot, Guided Expansion-600K	Each	12	---	12
	High Load Multi-Rotational Bearings, Pot, Guided Expansion-700K	Each	15	---	15

* See Note 19
** See sheet S-177 for Bar Splicer details.

STATION 78+20.97
BUILT 20__ BY
STATE OF ILLINOIS
F.A.P. 669-SEC. 13(HVB, HB-3) BR
LOADING HL-93
STRUCTURE NO. 090-0182

NAME PLATE
See Std. 515001

Michael Baker INTERNATIONAL
200 W Adams Street
Suite 1800
Chicago, IL 60606
PH: 312.707.8770
FAX: 312.707.8804

USER NAME = Jaime.Rivera	DESIGNED - JMK	REVISED -	
	CHECKED - JTB	REVISED -	
PLOT SCALE = 0:20000 ':" / in.	DRAWN - DMJ	REVISED -	
PLOT DATE = 5/6/2025	CHECKED - JTB	REVISED -	

STATE OF ILLINOIS
DEPARTMENT OF TRANSPORTATION

GENERAL NOTES & TOTAL BILL OF MATERIAL
STRUCTURE NO. 090-0182

SHEET S-4 OF S-194 SHEETS

F.A.P. RTE.	SECTION	COUNTY	TOTAL SHEETS	SHEET NO.
VAR.	13 (HVB, HB-3) BR-1:R	TAZEWELL	1173	530
		CONTRACT NO. 68C55		
		ILLINOIS	FED. AID PROJECT	

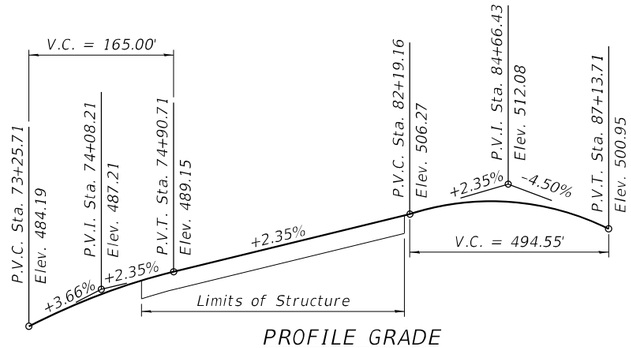

PROFILE GRADE

(along ℄ Cedar Street)

The profile grade shows the final elevations after grinding.
Up to ¼ inch may be ground off the bridge deck and the bridge approach slabs.

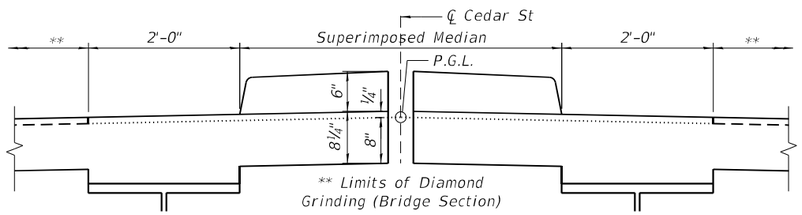

MEDIAN DETAIL AT PROFILE GRADE

(along ℄ Cedar Street)

Bridge deck shown, approach slab similar

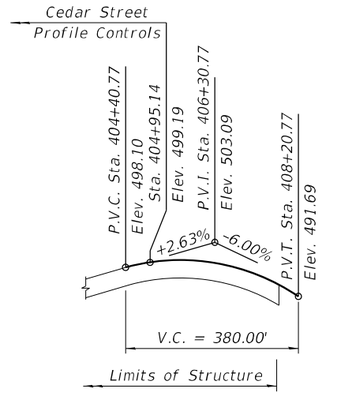

PROFILE GRADE

(along ℄ Ramp D)

The profile grade shows the final elevations after grinding.
Up to ¼ inch may be ground off the bridge deck and the bridge approach slabs.

TRACK TABLE

Track Number	Skew	Rail	Point A Track Sta. A	Point A Track Elev. A	Point B Track Sta. B	Point B Track Elev. B	Point C = CL Cedar CL Cedar St. Sta.	Point C = CL Cedar Track Sta. C	Point C = CL Cedar Track Elev. C	Point D Track Sta. D	Point D Track Elev. D	Point E Track Sta. E	Point E Track Elev. E	Point F Track Sta. F	Point F Track Elev. F
1	71°12'15"	North Rail	–	–	0+92.16	460.23	76+49.68	1+00.00	460.23	1+37.41	460.21	1+75.12	460.23	–	–
	71°24'41"	South Rail	–	–	0+93.35	460.24	76+54.89	1+00.00	460.23	1+38.02	460.17	1+75.27	460.21	–	–
2	74°27'58"	North Rail	0+05.54	460.32	0+64.37	460.23	76+50.23	1+00.00	460.27	1+33.93	460.19	1+73.62	460.21	–	–
	74°26'22"	South Rail	0+05.08	460.33	0+64.06	460.28	76+55.31	1+00.00	460.27	1+34.64	460.18	1+73.88	460.19	–	–
3	74°46'42"	North Rail	0+06.41	460.54	0+66.50	460.59	76+63.54	1+00.00	460.59	1+34.32	460.47	1+73.62	460.72	–	–
	74°46'44"	South Rail	0+06.84	460.56	0+65.56	460.64	76+68.69	1+00.00	460.66	1+34.86	460.60	1+73.62	460.74	–	–
4	74°34'16"	North Rail	0+05.95	460.77	0+65.19	460.78	76+76.82	1+00.00	460.79	1+33.73	460.82	1+61.75	460.79	2+01.61	460.15
	74°46'00"	South Rail	0+05.99	460.79	0+64.82	460.77	76+82.04	1+00.00	460.80	1+34.37	460.81	1+62.12	460.76	2+03.09	460.15
5	74°44'57"	North Rail	0+05.69	460.65	0+64.86	460.55	76+89.92	1+00.00	460.66	1+35.54	460.66	–	–	2+03.84	460.23
	74°53'09"	South Rail	0+06.45	460.62	0+65.16	460.53	76+95.04	1+00.00	460.59	1+36.36	460.60	1+79.69	460.12	2+04.40	460.15
6	74°31'10"	North Rail	0+07.51	460.80	0+65.34	460.87	77+03.76	1+00.00	460.90	1+34.58	460.89	1+79.03	460.85	2+05.75	460.36
	74°44'30"	South Rail	0+07.48	460.80	0+65.43	460.87	77+09.00	1+00.00	460.88	1+34.50	460.88	1+78.98	460.82	2+06.68	460.38
7	74°44'13"	North Rail	0+08.90	461.41	0+63.03	461.37	77+17.54	1+00.00	461.45	1+32.97	461.48	1+79.07	461.32	2+08.26	460.89
	74°21'43"	South Rail	0+09.40	461.45	0+63.90	461.40	77+22.82	1+00.00	461.47	1+34.33	461.44	1+79.94	461.38	2+09.10	460.93
8	76°05'59"	North Rail	0+11.17	461.42	0+63.71	461.58	77+34.68	1+00.00	461.65	1+33.02	461.63	1+80.22	461.60	–	–
	76°08'15"	South Rail	0+11.78	461.52	0+64.30	461.61	77+39.85	1+00.00	461.68	1+33.32	461.64	1+80.86	461.60	–	–
9	74°53'41"	North Rail	0+11.53	461.80	0+65.14	461.70	77+48.25	1+00.00	461.58	1+35.28	461.33	1+80.63	461.39	–	–
	74°54'47"	South Rail	0+12.89	461.85	0+66.14	461.70	77+53.40	1+00.00	461.59	1+36.31	461.36	1+80.64	461.43	–	–
10	77°18'20"	North Rail	0+14.44	461.75	0+61.66	461.76	77+60.08	1+00.00	461.84	1+33.79	461.79	1+78.65	461.78	–	–
	81°09'46"	South Rail	0+14.99	461.87	0+61.65	461.84	77+65.03	1+00.00	461.83	1+34.29	461.74	1+79.31	461.74	–	–
11	74°34'02"	North Rail	0+16.92	462.11	0+64.75	462.18	77+75.97	1+00.00	462.21	1+35.74	461.81	1+76.52	461.68	–	–
	74°54'12"	South Rail	0+17.47	462.12	0+65.31	462.18	77+81.19	1+00.00	462.20	1+36.70	461.80	1+78.19	461.64	–	–
12	82°53'11"	North Rail	–	–	–	–	77+84.18	1+00.00	–	1+38.37	462.05	1+76.98	461.92	–	–
	82°40'36"	South Rail	–	–	–	–	77+89.21	1+00.00	–	1+38.82	462.13	1+80.44	461.95	–	–
13	82°53'11"	North Rail	0+17.96	462.11	0+64.47	462.19	77+84.18	1+00.00	462.19	1+36.57	462.10	1+78.67	461.98	–	–
	82°40'36"	South Rail	0+18.74	462.11	0+64.16	462.22	77+89.21	1+00.00	462.24	1+36.76	462.17	1+79.30	462.08	–	–
14	89°57'44"	North Rail	0+19.11	462.13	0+64.48	462.29	78+03.94	1+00.00	462.26	1+36.51	462.28	1+79.16	462.07	–	–
	90°07'00"	South Rail	0+18.63	462.16	0+63.77	462.30	78+08.83	1+00.00	462.28	1+36.74	462.35	1+79.13	462.20	–	–
15	89°25'12"	North Rail	–	–	0+57.72	462.13	78+22.55	1+00.00	462.34	1+39.86	462.37	1+86.35	462.58	–	–
	89°34'32"	South Rail	–	–	0+57.15	462.15	78+27.52	1+00.00	462.34	1+39.04	462.37	1+86.90	462.60	–	–
16	92°43'35"	North Rail	0+18.85	462.26	0+56.17	462.15	78+24.96	1+00.00	462.34	1+40.17	462.36	1+86.72	462.63	–	–
	92°45'20"	South Rail	0+18.75	462.26	0+55.52	462.16	78+29.88	1+00.00	462.37	1+39.11	462.39	1+86.35	462.66	–	–

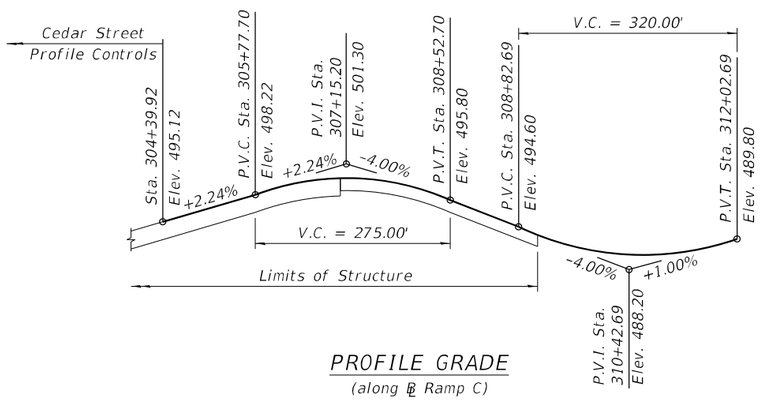

PROFILE GRADE

(along ℄ Ramp C)

The profile grade shows the final elevations after grinding.
Up to ¼ inch may be ground off the bridge deck and the bridge approach slabs.

TRACK TABLE

Track Number	Skew	Rail	Point A Track Sta. A	Point A Track Elev. A	Point B Track Sta. B	Point B Track Elev. B	Point C = CL Cedar CL Cedar St. Sta.	Point C = CL Cedar Track Sta. C	Point C = CL Cedar Track Elev. C	Point D Track Sta. D	Point D Track Elev. D	Point E Track Sta. E	Point E Track Elev. E	Point F Track Sta. F	Point F Track Elev. F	Point G Track Sta. G	Point G Track Elev. G	Point H Track Sta. H	Point H Track Elev. H
17	97°33'08"	North Rail	0+24.36	466.42	0+54.93	466.71	80+92.08	1+00.00	467.14	1+22.23	467.33	1+36.76	467.52	1+65.84	467.85	2+05.95	468.36	2+59.23	469.02
	98°16'23"	South Rail	0+23.01	466.43	0+54.15	466.71	80+97.10	1+00.00	467.18	1+21.30	467.38	1+36.64	467.54	1+64.08	467.88	2+05.35	468.34	2+58.99	469.05

CURVE DATA

(Ramp C)

CURVE RAMP C-1
P.I. Sta. = 306+60.34
Δ = 19° 02' 18" (Rt)
D = 11° 48' 49"
R = 485.00'
T = 81.33'
L = 161.16'
E = 6.77'
e = 6.00%*
P.C. Sta. = 305+79.02
P.T. Sta. = 307+40.17

CURVE RAMP C-2
P.I. Sta. = 308+87.70
Δ = 54° 44' 06" (Rt)
D = 20° 06' 14"
R = 285.00'
T = 147.53'
L = 272.26'
E = 35.92'
e = 6.00%*
P.C. Sta. = 307+40.17
P.T. Sta. = 310+12.43

CURVE DATA

(Ramp D)

CURVE RAMP D-4
P.I. Sta. = 406+45.59
Δ = 23° 25' 28" (Lt)
D = 11° 48' 49"
R = 485.00'
T = 100.55'
L = 198.28'
E = 10.31'
e = 6.00%*
P.C. Sta. = 405+45.05
P.T. Sta. = 407+43.33

* For superelevation transition information, see Sheets 55 & 62.

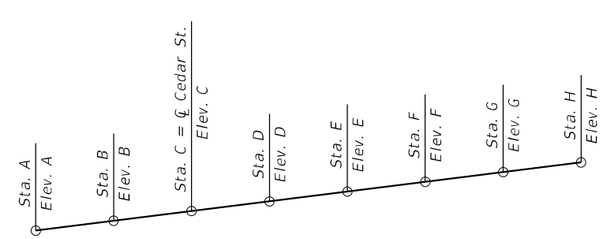

EXISTING TOP OF TRACK ELEVATIONS

(Track 17, See Track Table)

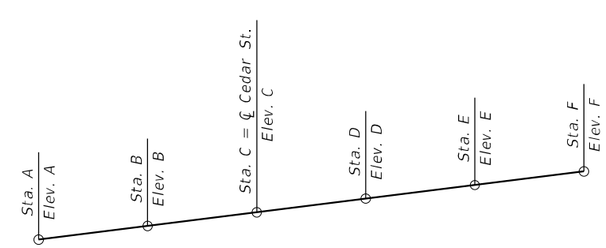

EXISTING TOP OF TRACK ELEVATIONS

(Tracks 1 thru 16, See Track Table)

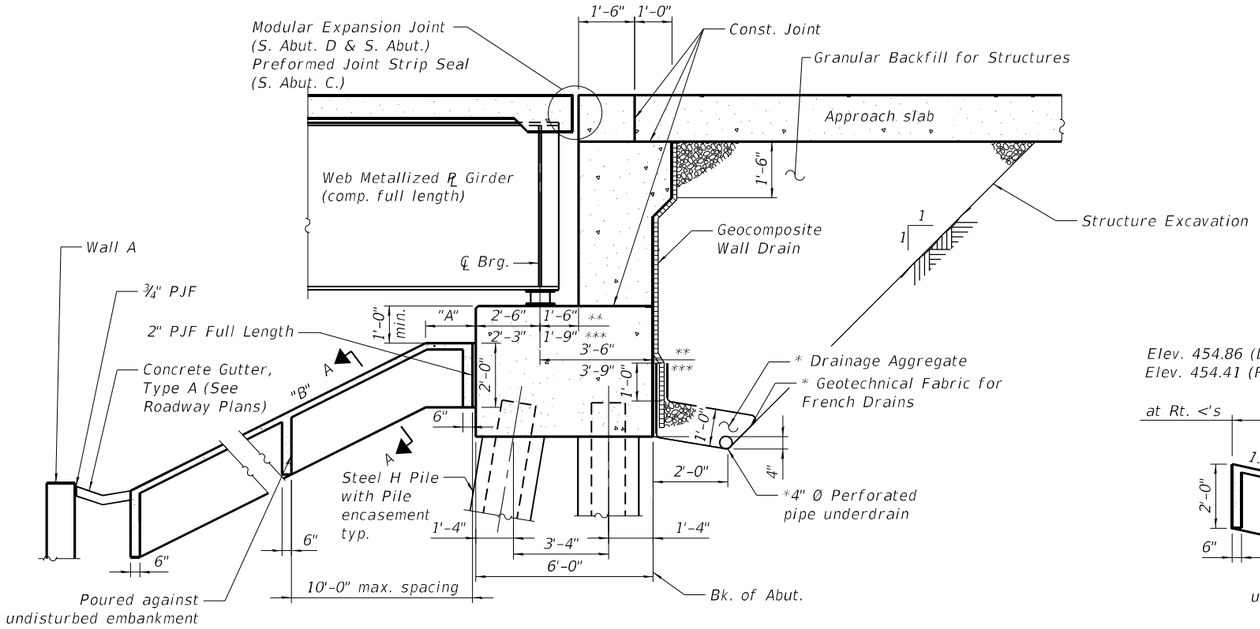

SECTION THRU SOUTH ABUTMENT C, SOUTH ABUTMENT, & SOUTH ABUTMENT D

(Horiz. dim. @ Rt. <'s)

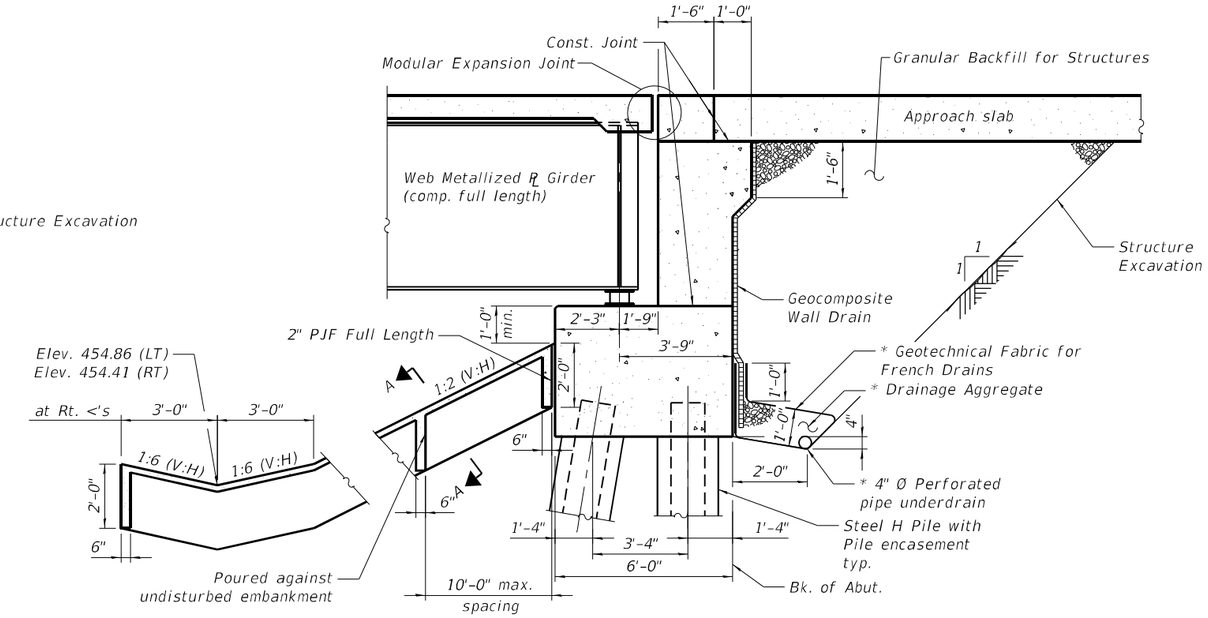

SECTION THRU NORTH ABUTMENT

(Horiz. dim. @ Rt. <'s)

"A" - Berm Width Varies
1'-0" (S. Abut.)
0'-0" (S. Abut. C.)
0'-0" (S. Abut. D.)
"B" - Slope at right angles (U.N.O.)
1:2 (V:H) (S. Abut.)
Varies, 1:53 to 1:56 (V:H) (S. Abut. C.)
Varies, 1:2 to 1:12 (V:H) (S. Abut. D.)

* Included in the cost of Pipe Underdrains for Structures.
** South Abutment C
*** South Abutment & South Abutment D

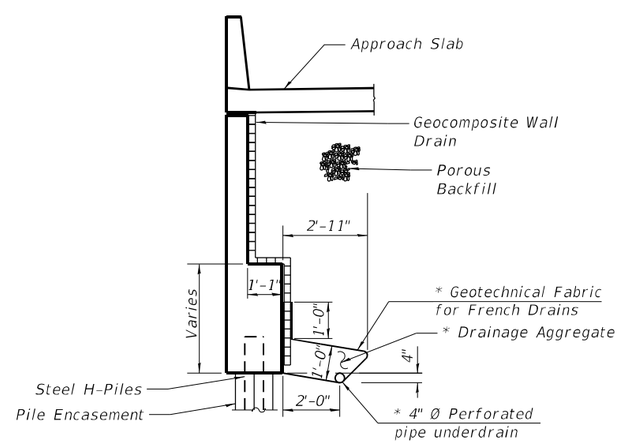

TYPICAL SECTION THRU WINGWALLS AT SOUTH ABUTMENT

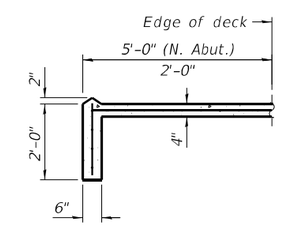

SECTION A-A

Note:
All drainage system components shall extend to 2'-0" from the end of each wingwall except an outlet pipe shall extend until intersecting with the side slopes. The pipes shall drain into concrete headwalls. (See Article 601.05 of the Standard Specifications and Highway Standard 601101).

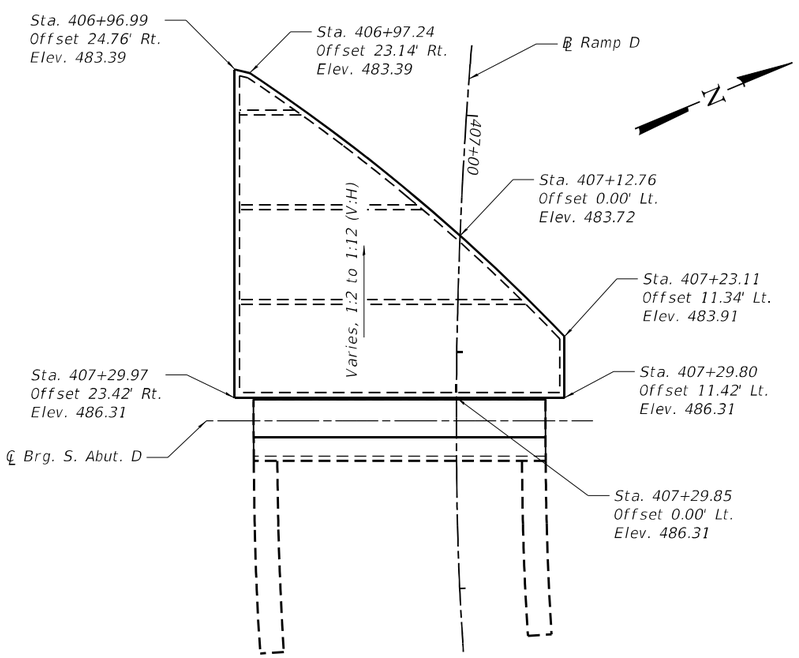

SLOPEWALL PLAN - S. ABUT. D

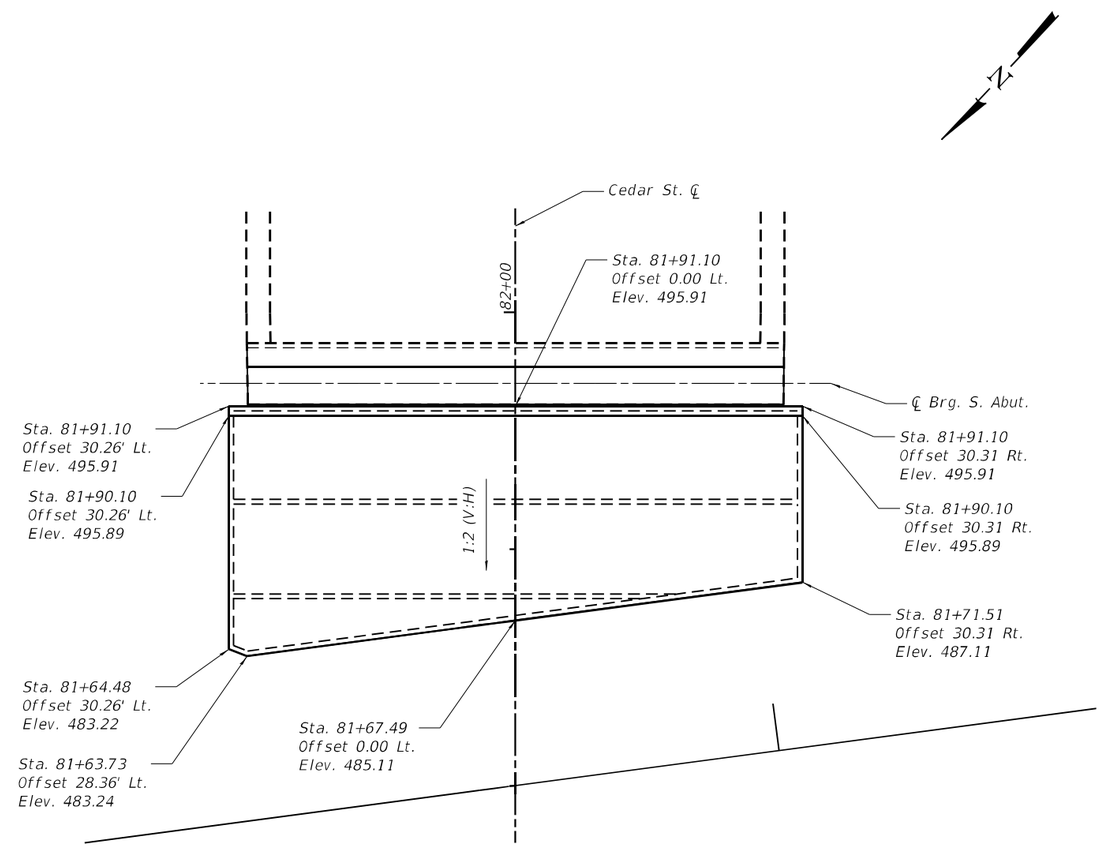

SLOPEWALL PLAN - S. ABUT.

NOTES:

1. Slope wall shall be reinforced with galvanized welded wire fabric. 6" x 6" - W4.0 x W4.0. weighing 58 lbs per 100 sq. ft.

MODEL: Default
FILE NAME: pw:\\mbakerintl.bentley.com:ibi-usw-pw-03\Documents\Chicago IL\01 Projects\179740 IDOT Ceda-SExt PhII\5.0 CADD\CAD Sheets\0900182-68C55-007-SlopeWall.dgn

Michael Baker INTERNATIONAL
200 W Adams Street
Suite 1800
Chicago, IL 60606
P:+1 312.707.8770
FAX: 312.707.8804

USER NAME = DLamb	DESIGNED - MLK	REVISED -	
	CHECKED - YC	REVISED -	
PLOT SCALE = 0.1667 ' / in.	DRAWN - DMJ	REVISED -	
PLOT DATE = 6/6/2023	CHECKED - JTB	REVISED -	

STATE OF ILLINOIS
DEPARTMENT OF TRANSPORTATION

SLOPEWALL PLANS AND DETAILS 1
STRUCTURE NO. 090-0182

SHEET S-7 OF S-194 SHEETS

F.A.P. RTE.	SECTION	COUNTY	TOTAL SHEETS	SHEET NO.
VAR.	13 (HVB, HB-3) BR-1;R	TAZEWELL	1173	533
		CONTRACT NO. 68C55		
	ILLINOIS	FED. AID PROJECT		

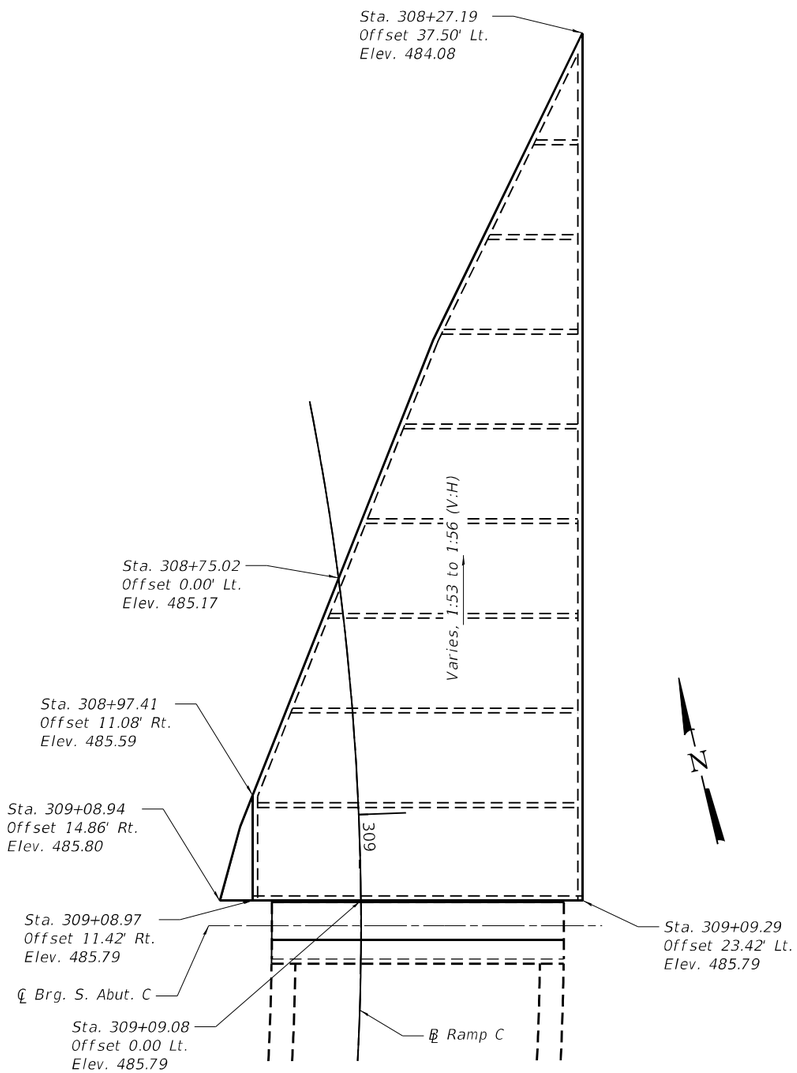

SLOPEWALL PLAN - S. ABUT. C

NOTES:

1. For typical slopewall notes, see sheet S-7.

Michael Baker INTERNATIONAL 200 W Adams Street Suite 1800 Chicago, IL 60606 PH: 312.707.8770 FAX: 312.707.8804	USER NAME = DLamb	DESIGNED - MLK	REVISED -	STATE OF ILLINOIS DEPARTMENT OF TRANSPORTATION	SLOPEWALL PLAN AND DETAILS 2 STRUCTURE NO. 090-0182	F.A.P. RTE.	SECTION	COUNTY	TOTAL SHEETS	SHEET NO.
		CHECKED - YC	REVISED -			VAR.	13 (HVB, HB-3) BR-1:R	TAZEWELL	1173	534
	PLOT SCALE = 0.1667 ' / in.	DRAWN - DMJ	REVISED -					CONTRACT NO. 68C55		
	PLOT DATE = 6/6/2023	CHECKED - JTB	REVISED -		SHEET S-8 OF S-194 SHEETS		ILLINOIS	FED. AID PROJECT		

MODEL: Default
FILE NAME: pw:\\mb-us-pw.bentley.com:mb-us-pw-03\Documents\Chicago-IL\01_Projects\179740 IDOT CedarSt\Ext Phll\5.0 CADD\CAD_Sheets\09900182-68C55-008-SlopeWall2.dgn

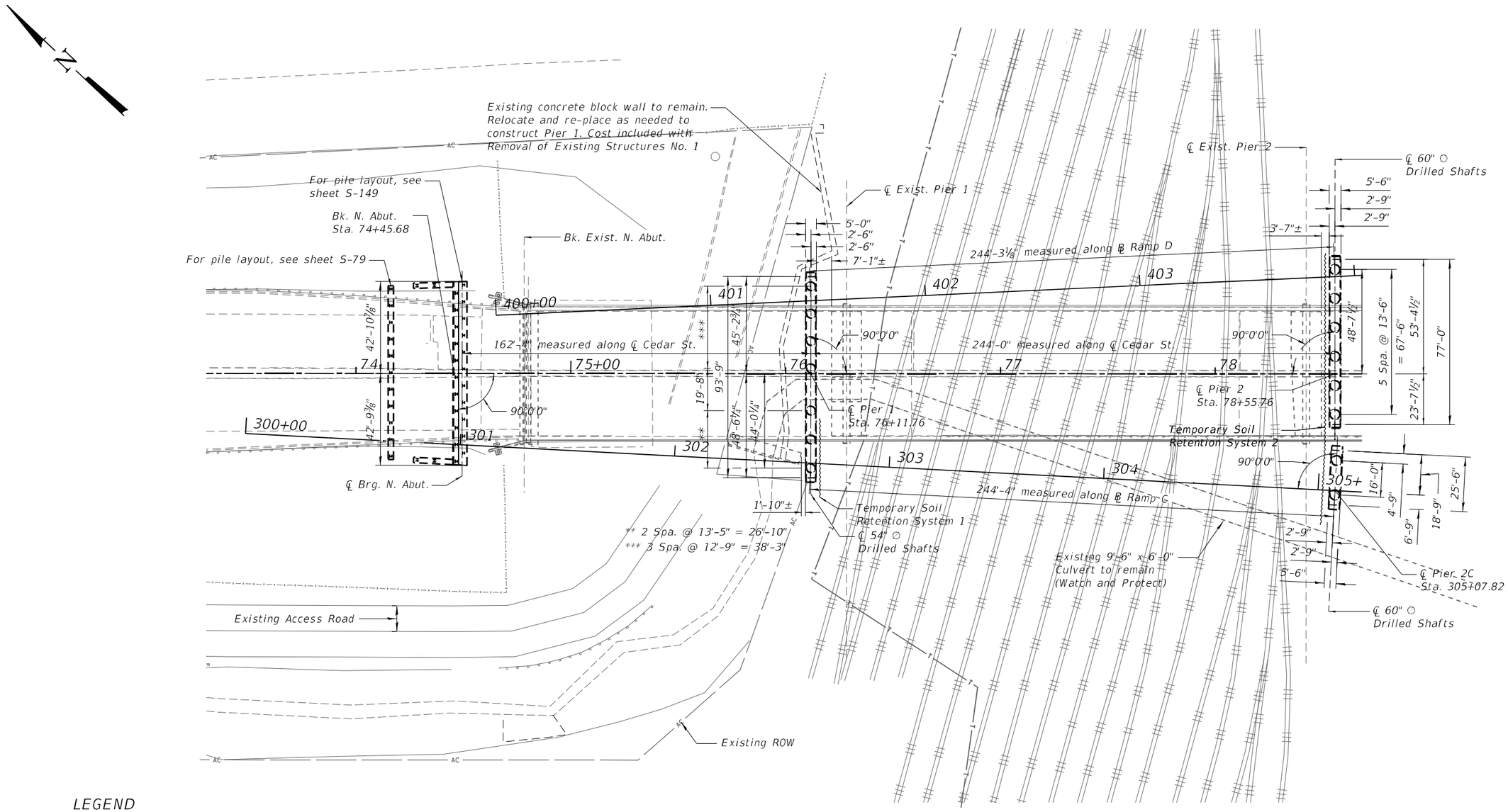

LEGEND

- Exist. Telephone Line
- Exist. Fence
- Exist Guardrail
- Exist. Paved Ditch

FOUNDATION LAYOUT

Michael Baker INTERNATIONAL, 200 W Adams Street, Suite 1800, Chicago, IL 60606, PH: 312.707.8770, FAX: 312.707.8804	USER NAME = DLamb	DESIGNED - JMK	REVISED -	STATE OF ILLINOIS DEPARTMENT OF TRANSPORTATION	FOUNDATION LAYOUT 1 STRUCTURE NO. 090–0182	F.A.P. RTE.	SECTION	COUNTY	TOTAL SHEETS	SHEET NO.
		CHECKED - ADM	REVISED -			VAR.	13 (HVB, HB-3) BR-1;R	TAZEWELL	1173	535
	PLOT SCALE = 49.9998 ' / in.	DRAWN - DMJ	REVISED -					CONTRACT NO. 68C55		
	PLOT DATE = 6/6/2023	CHECKED - ADM	REVISED -		SHEET S-9 OF S-194 SHEETS		ILLINOIS	FED. AID PROJECT		

MODEL: Default
FILE NAME: pw:\\mb-us-pw.bentley.com:mb-us-pw-93\Documents\Chicago 1\101 Projects\179740 IDOT Cedar St\Ex Phll 5.0 CADD\CAD Sheets\0900182-68C55-009-Found1.dgn

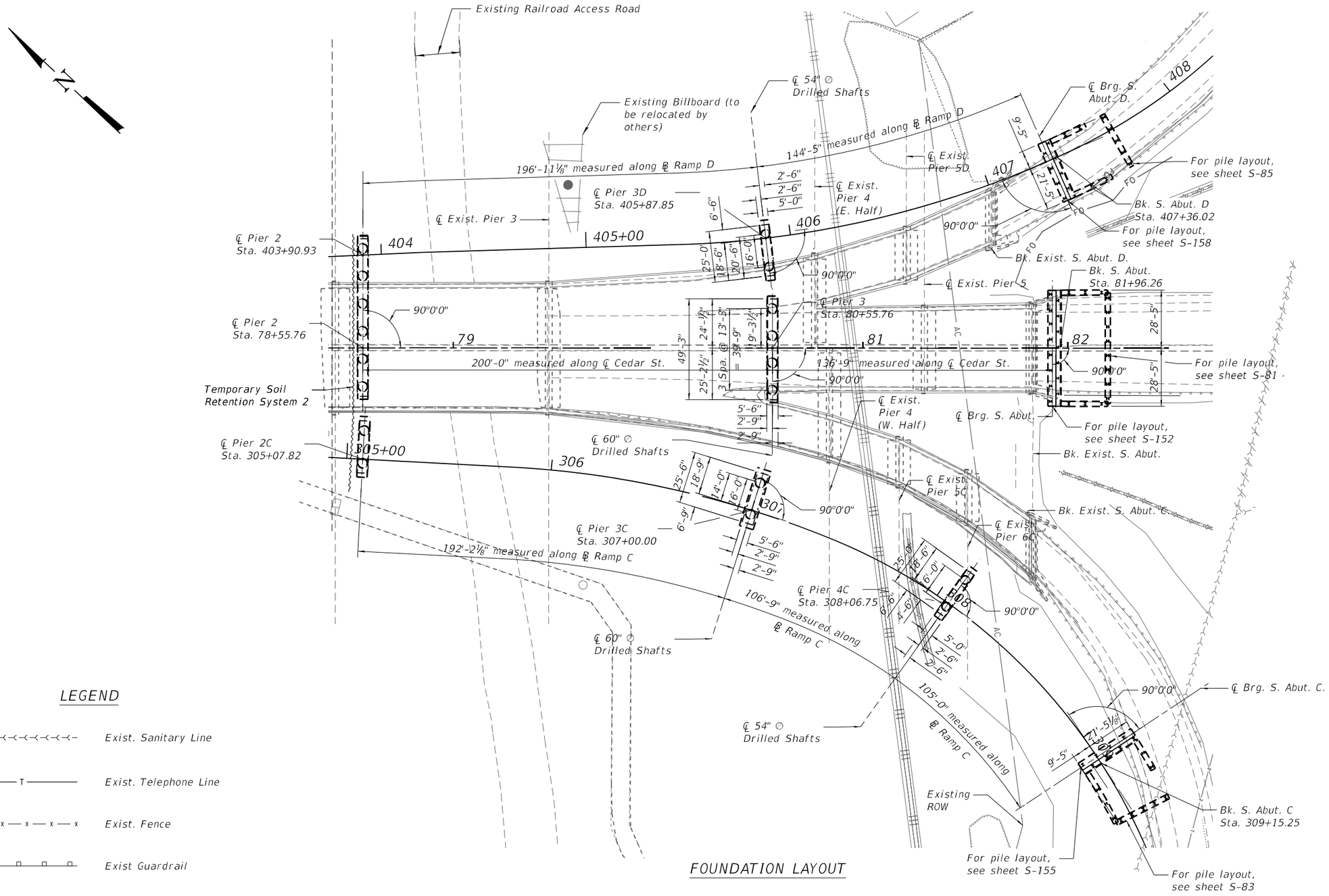

Michael Baker INTERNATIONAL 200 W Adams Street Suite 1800 Chicago, IL 60606 P:+1 312.707.8770 FAX: 312.707.8804	USER NAME = DLamb	DESIGNED - JMK	REVISED -	STATE OF ILLINOIS DEPARTMENT OF TRANSPORTATION	FOUNDATION LAYOUT 2 STRUCTURE NO. 090–0182	F.A.P. RTE.	SECTION	COUNTY	TOTAL SHEETS	SHEET NO.
		CHECKED - ADM	REVISED -			VAR.	13 (HVB, HB-3) BR-1;R	TAZEWELL	1173	536
	PLOT SCALE = 49.9998 ' / in.	DRAWN - DMJ	REVISED -					CONTRACT NO. 68C55		
	PLOT DATE = 6/6/2023	CHECKED - ADM	REVISED -		SHEET S-10 OF S-194 SHEETS		ILLINOIS	FED. AID PROJECT		

MODEL: Default
FILE NAME: pw:\\mbi-us-pw.bentley.com:mbi-us-pw\Documents\Chicago IL\01 Projects\179740 IDOT Ceda\SIE+ Phl1\5.0 CADD\CAD Sheets\0900182-68C55-010-Found1.layout2.dgn

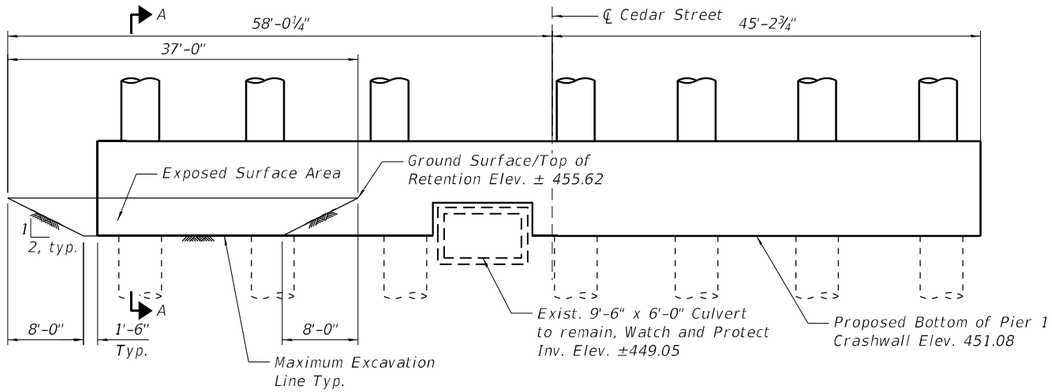

TEMPORARY SOIL RETENTION SYSTEM 1 - ELEVATION

(Looking Downstation)

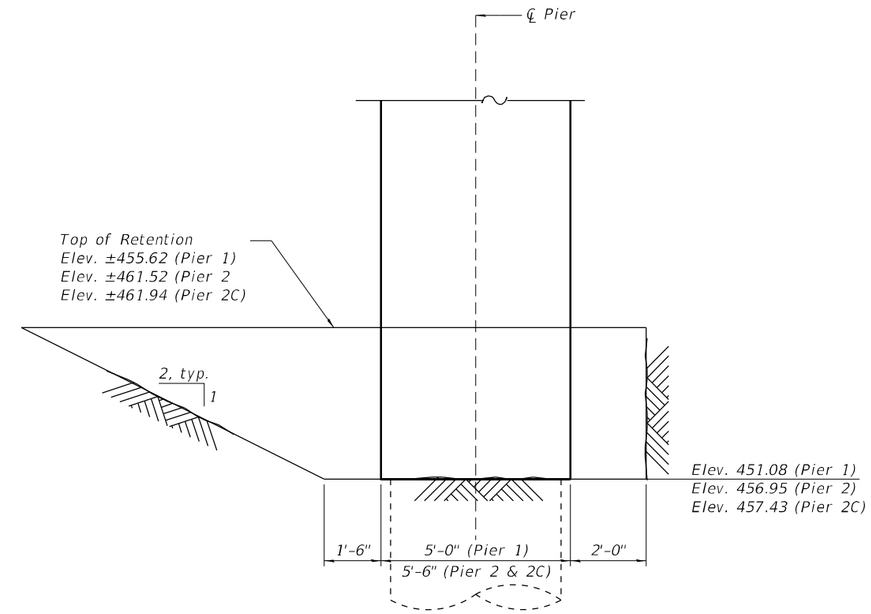

TEMPORARY SOIL RETENTION SYSTEM - SECTION A-A

(Pier 1 Shown)
(Pier 2 & Pier 2C Similar)

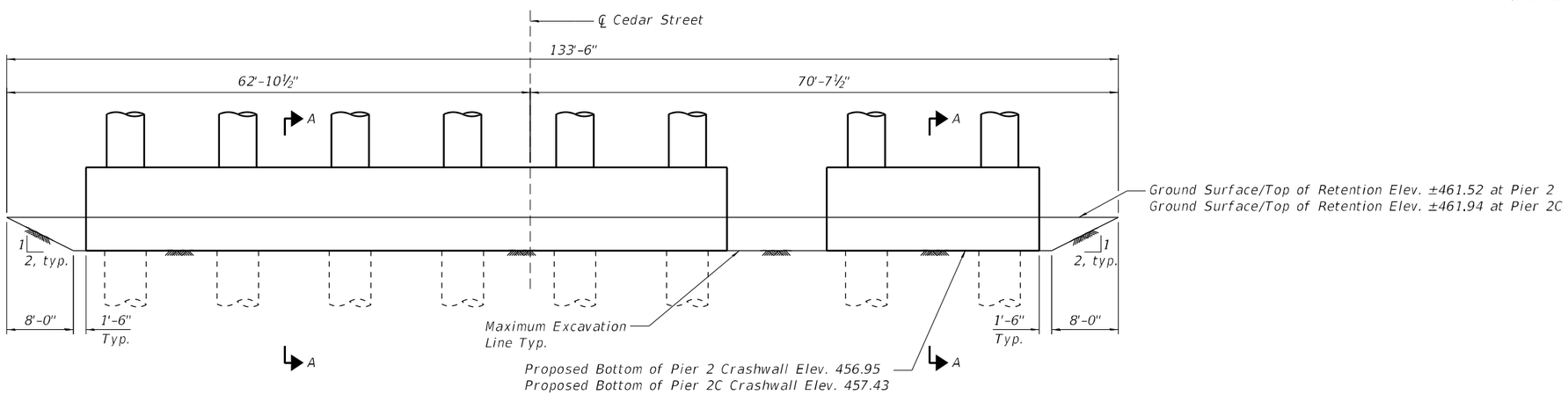

TEMPORARY SOIL RETENTION SYSTEM 2 - ELEVATION

(Looking Upstation)

NOTES:

1. A cantilevered sheet piling does not appear feasible and additional members or other retention systems may be required. The Contractor shall submit a temporary soil retention system design including plan details and calculations for review and acceptance by the Engineer. The plan locations specified reside within Influence Zone 2 and open cut excavation shall not be allowed to protect nearby railroad tracks and utilities.

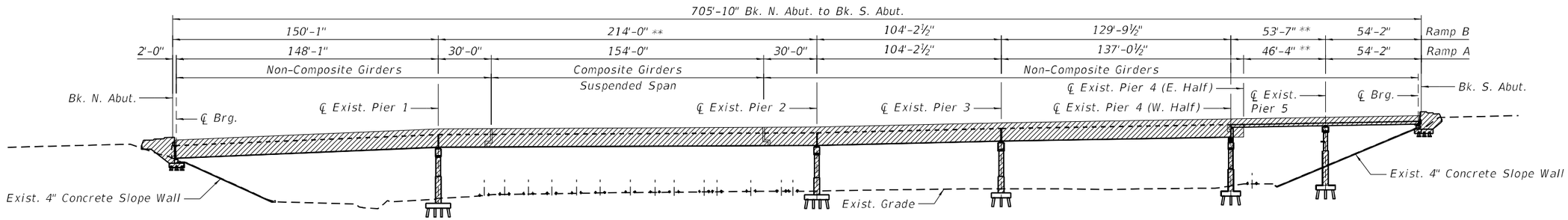

ELEVATION

** Limits of Protective Shield

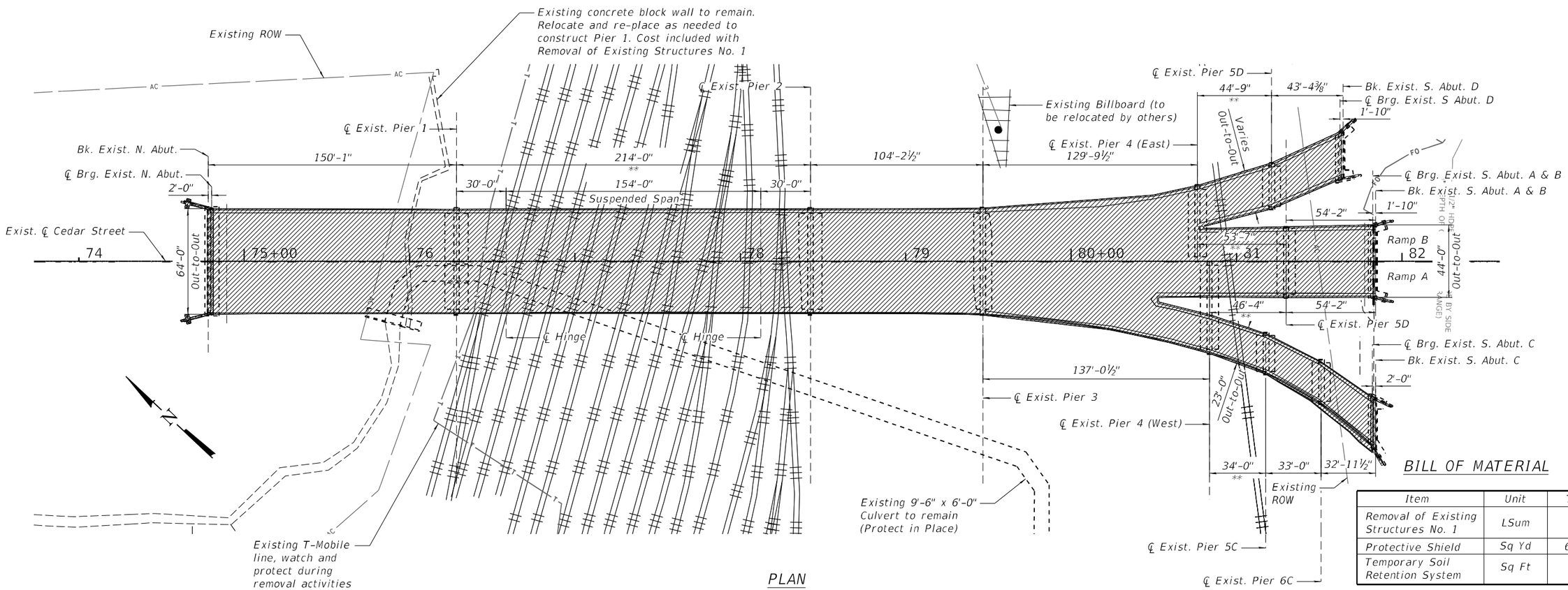

PLAN

** Limits of Protective Shield

BILL OF MATERIAL

Item	Unit	Total
Removal of Existing Structures No. 1	LSum	1
Protective Shield	Sq Yd	6,586
Temporary Soil Retention System	Sq Ft	702

NOTES:

1. A minimum vertical clearance of 23'-0" shall be maintained between top of rail and bottom of protective shield unless otherwise approved by the Railroad.

2. Bridge railing and impact attenuator removal to be included in the cost of Removal of Existing Structures No. 1.

LEGEND

Removal of Existing Structures No. 1

MODEL: Default
FILE NAME: pw:\\mb-us-pw.bentley.com:mb-us-pw-03\Documents\Chicago IL\01 Projects\179740 IDOT Ceda/SIE+ Phll5.0 CADD\CAD Sheets\0900182-68C55-012-RemDet1.dgn

Michael Baker INTERNATIONAL
200 W Adams Street
Suite 1800
Chicago, IL 60606
P:+1 312.707.8770
FAX: 312.707.8804

USER NAME = DLamb	DESIGNED - JMK	REVISED -	
	CHECKED - MLK	REVISED -	
PLOT SCALE = 0.1667 ' / in.	DRAWN - DMJ	REVISED -	
PLOT DATE = 6/6/2023	CHECKED - MLK	REVISED -	

STATE OF ILLINOIS
DEPARTMENT OF TRANSPORTATION

EXISTING STRUCTURE REMOVAL DETAILS 1
STRUCTURE NO. 090-0182

SHEET S-12 OF S-194 SHEETS

F.A.P. RTE.	SECTION	COUNTY	TOTAL SHEETS	SHEET NO.
VAR.	13 (HVB, HB-3) 8R-1;R	TAZEWELL	1173	538
		CONTRACT NO. 68C55		
	ILLINOIS	FED. AID PROJECT		

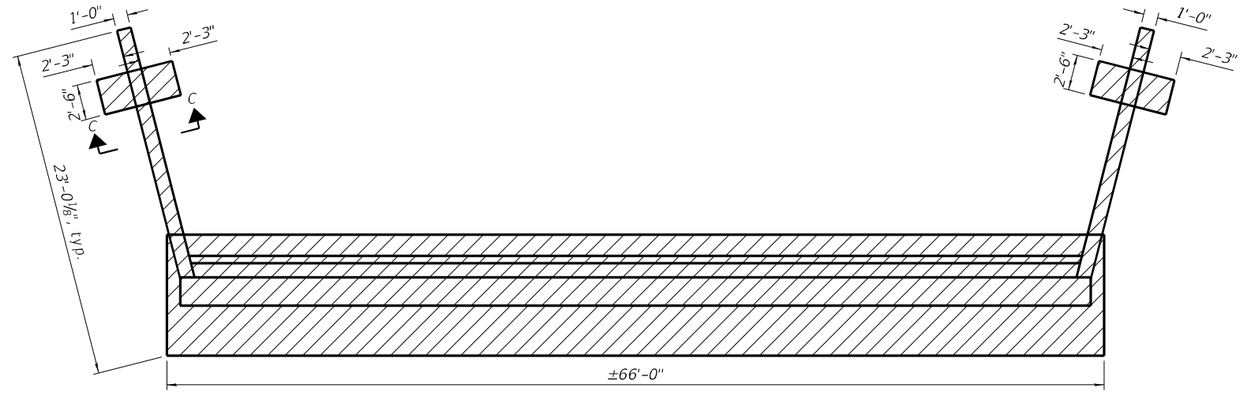

PLAN N. ABUTMENT

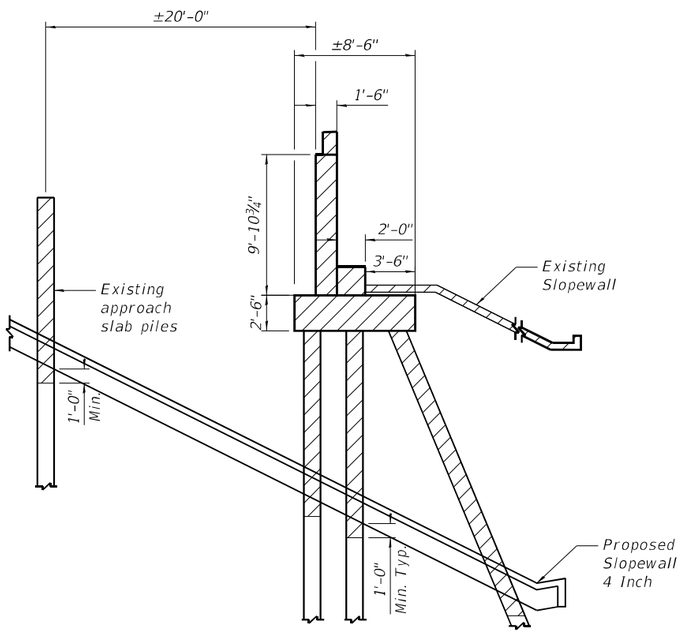

SECTION A-A

Piles to be removed 1'-0" below the proposed elevation of the subgrade for the slopewall. Remove additional piles as necessary for proposed construction.

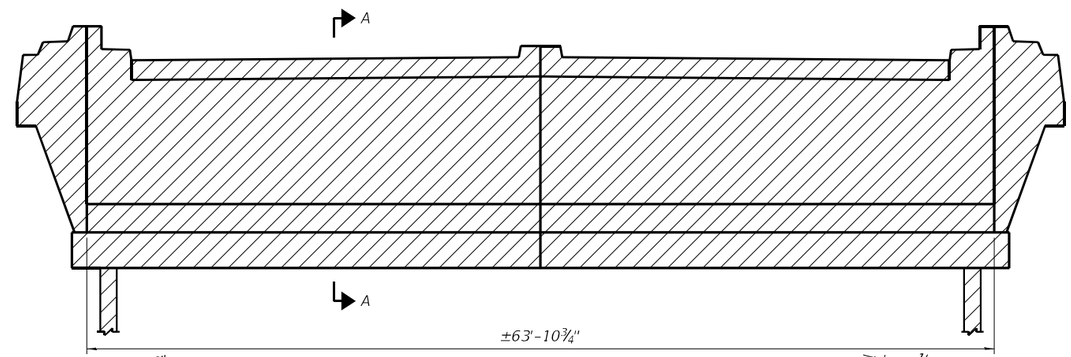

ELEVATION N. ABUTMENT

(Facing Northwest)

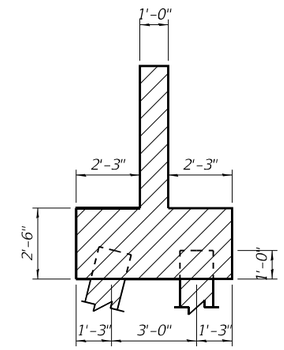

SECTION C-C

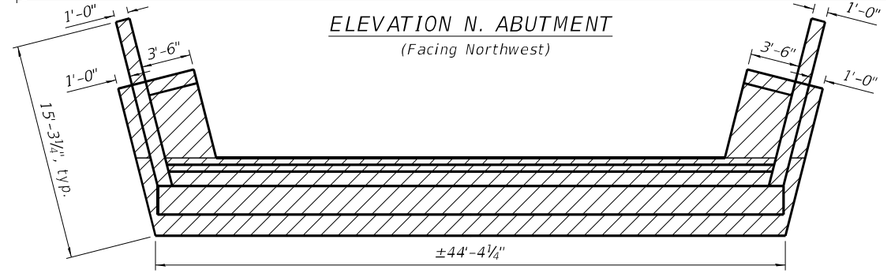

PLAN S. ABUTMENT

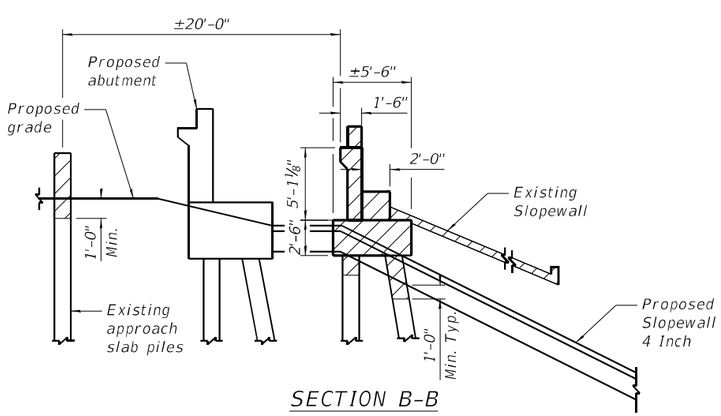

SECTION B-B

Piles to be removed 1'-0" below the proposed elevation of the subgrade for the slopewall or proposed abutment. Remove additional piles as necessary for proposed construction.

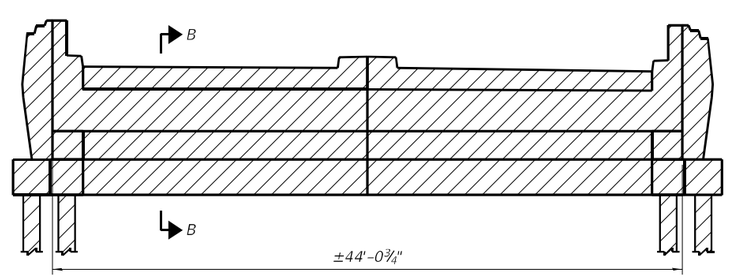

ELEVATION S. ABUTMENT

(Facing Southeast)

LEGEND

Removal of Existing Structures No. 1

MODEL: Default
FILE NAME: pw:\\mi-us-pw.bakerhex.com:mi-us-pw-03\Documents\Chicago IL\01 Projects\179740 IDOT Ceda/SiExt PhII\5.0 CADD\CAD Sheets\0900182-68C55-013-SubRem1.dgn

Michael Baker INTERNATIONAL
200 W Adams Street
Suite 1800
Chicago, IL 60606
P: 312.707.8970
FAX: 312.707.8804

USER NAME = DLamb	DESIGNED - JMK	REVISED -	
	CHECKED - MLK	REVISED -	
PLOT SCALE = 0:2.0000 ':" / in.	DRAWN - DMJ	REVISED -	
PLOT DATE = 6/6/2023	CHECKED - MLK	REVISED -	

STATE OF ILLINOIS
DEPARTMENT OF TRANSPORTATION

EXISTING SUBSTRUCTURE REMOVAL 1
STRUCTURE NO. 090-0182

SHEET S-13 OF S-194 SHEETS

F.A.P. RTE.	SECTION	COUNTY	TOTAL SHEETS	SHEET NO.
VAR.	13 (HVB, HB-3) BR-1:R	TAZEWELL	1173	539
		CONTRACT NO. 68C55		
	ILLINOIS	FED. AID PROJECT		

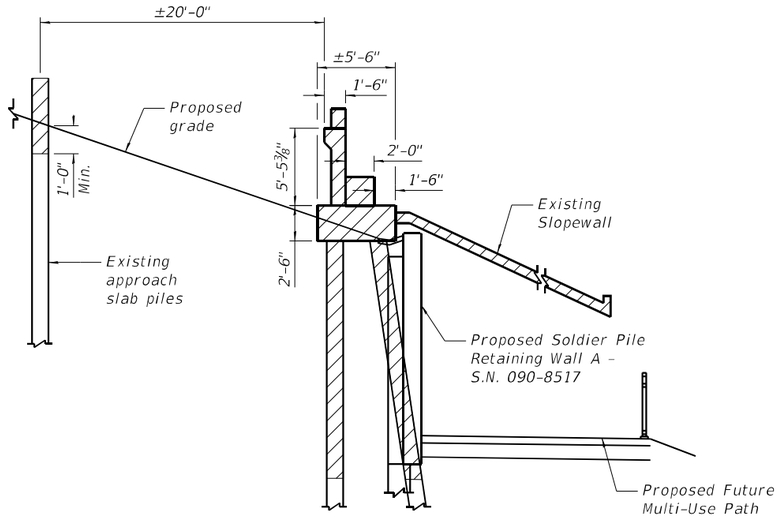

SECTION C-C

Piles to be removed as necessary for proposed construction

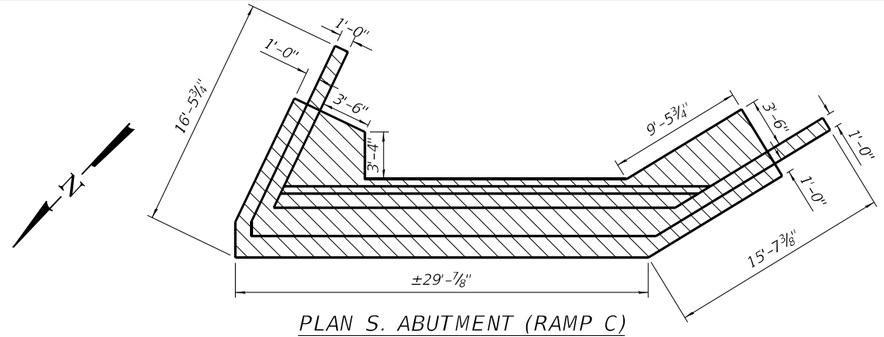

PLAN S. ABUTMENT (RAMP C)

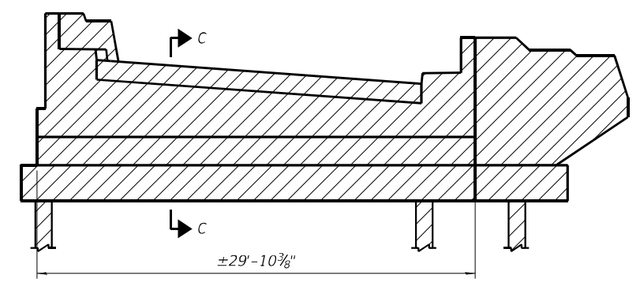

ELEVATION S. ABUTMENT (RAMP C)

(Facing South)

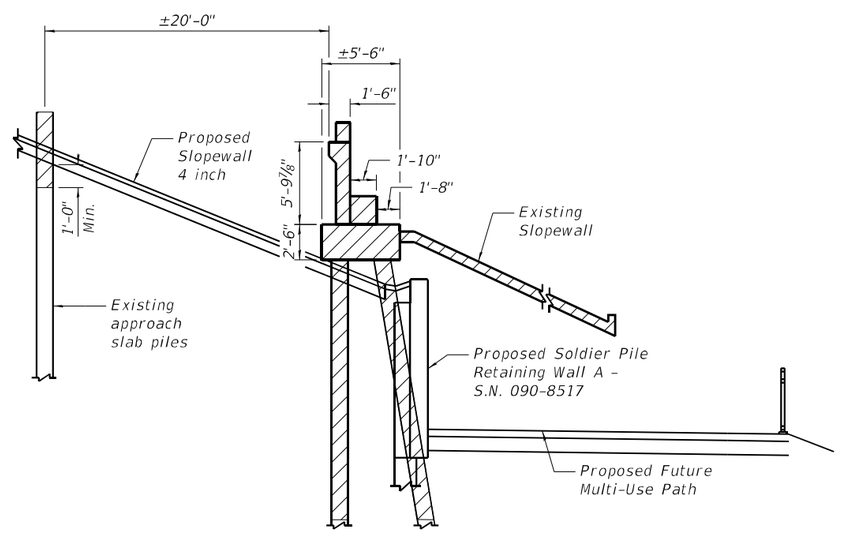

SECTION D-D

Piles to be removed as necessary for proposed construction

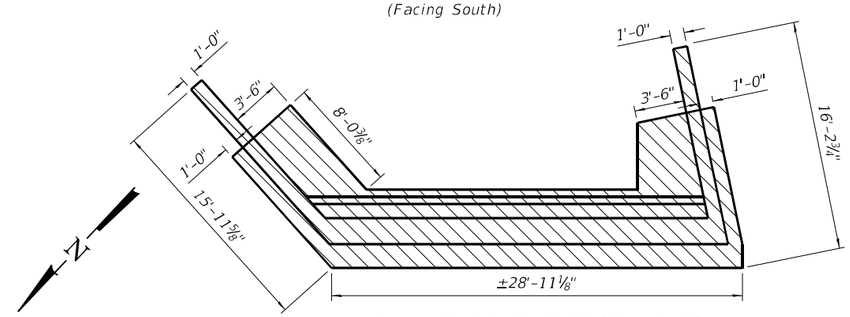

PLAN S. ABUTMENT (RAMP D)

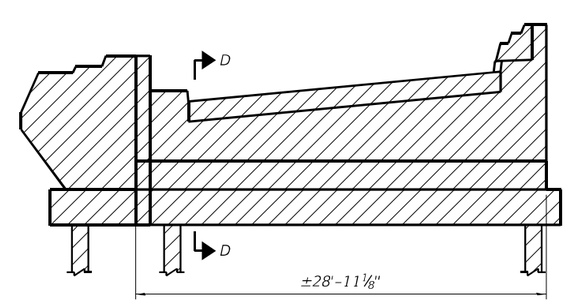

ELEVATION S. ABUTMENT (RAMP D)

(Facing East)

LEGEND

Removal of Existing Structures No. 1

MODEL: Default
FILE NAME: pw:\\mbs-uscov.bentley.com:mbs-uscov:Projects\179740 IDOT Ceda-SExt PhII\5.0 CADD\CAD Sheets\0900182-68C55-S14-SubItem2.dgn

Michael Baker INTERNATIONAL
200 W Adams Street
Suite 1800
Chicago, IL 60606
PH: 312.707.8700
FAX: 312.707.8804

USER NAME = DLamb	DESIGNED - JMK	REVISED -	
	CHECKED - MLK	REVISED -	
PLOT SCALE = 0.1667 ' / in.	DRAWN - DMJ	REVISED -	
PLOT DATE = 6/6/2023	CHECKED - MLK	REVISED -	

STATE OF ILLINOIS
DEPARTMENT OF TRANSPORTATION

EXISTING SUBSTRUCTURE REMOVAL 2
STRUCTURE NO. 090-0182

SHEET S-14 OF S-194 SHEETS

F.A.P. RTE.	SECTION	COUNTY	TOTAL SHEETS	SHEET NO.
VAR.	13 (HVB, HB-3) BR-1;R	TAZEWELL	1173	540
		CONTRACT NO. 68C55		
	ILLINOIS	FED. AID PROJECT		

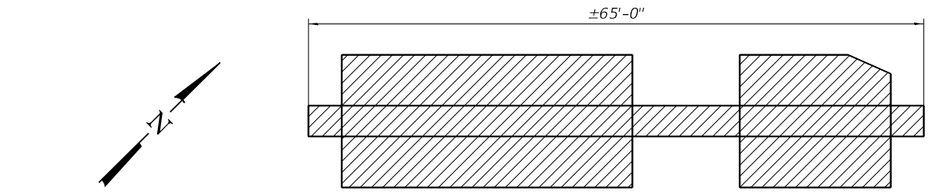

PLAN PIER 1

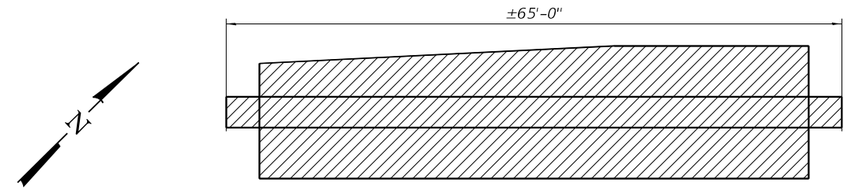

PLAN PIER 2

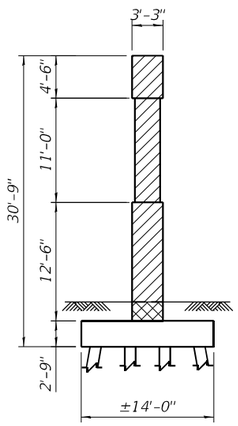

END VIEW

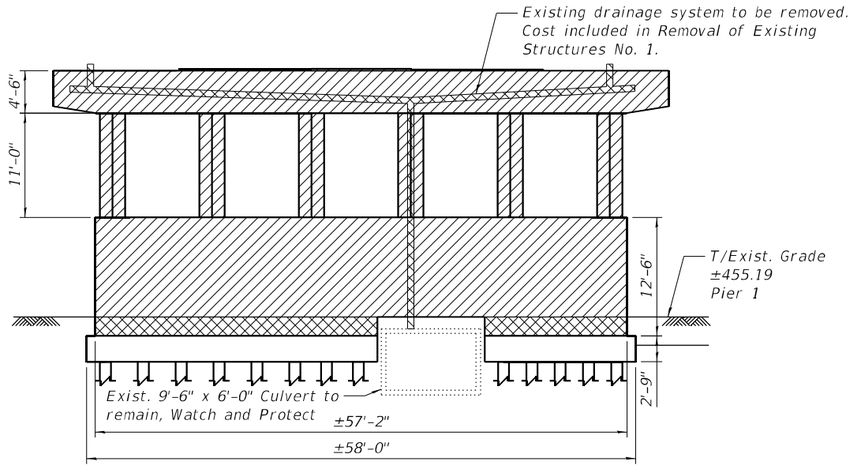

ELEVATION PIER 1

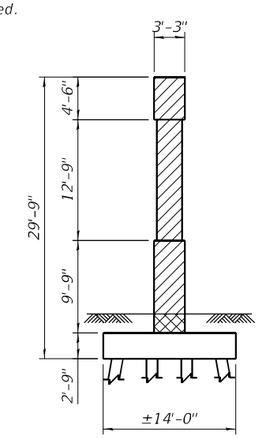

END VIEW

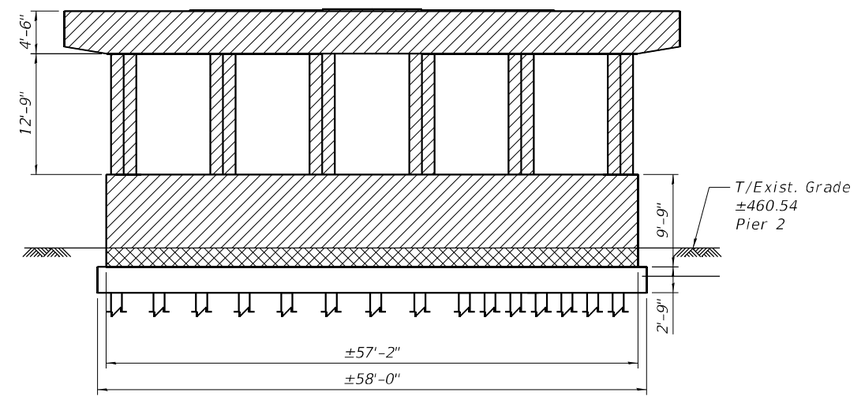

ELEVATION PIER 2

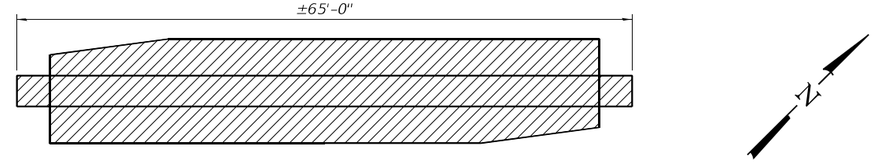

PLAN PIER 3

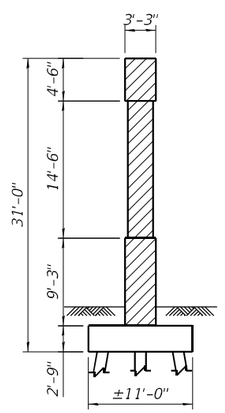

END VIEW

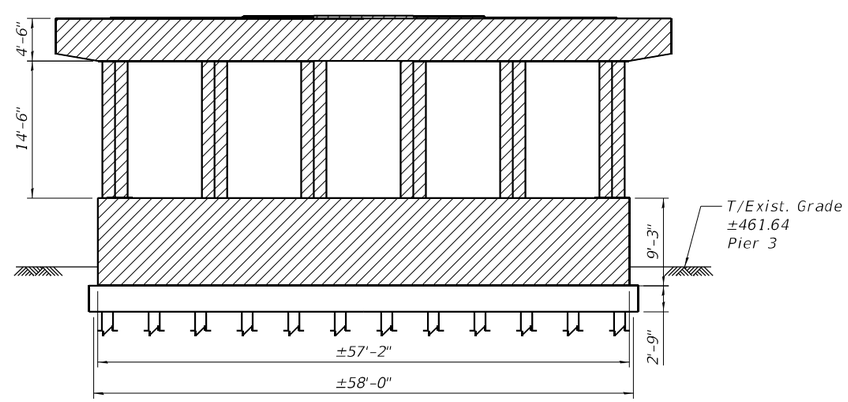

ELEVATION PIER 3

LEGEND

Removal of Existing Structures No. 1

Structure to be Broken and Left in Place, See Sheet 17

MODEL: Default
FILE NAME: pw:\\mb-ic-pw.bentley.com:mb-ic-pw-03\Documents\Chicago IL\01 Projects\179740 IDOT Cedar-Sifex Phase 5.0 CADD\CAD Sheets\0900182-68C55-015-SubRem3.dgn

Michael Baker INTERNATIONAL
200 W Adams Street
Suite 1800
Chicago, IL 60606
PH: 312.707.8172
FAX: 312.707.8804

USER NAME = DLamb	DESIGNED - JMK	REVISED -	
	CHECKED - MLK	REVISED -	
PLOT SCALE = 0:20000 ':" / in.	DRAWN - DMJ	REVISED -	
PLOT DATE = 6/6/2023	CHECKED - MLK	REVISED -	

STATE OF ILLINOIS
DEPARTMENT OF TRANSPORTATION

EXISTING SUBSTRUCTURE REMOVAL 3
STRUCTURE NO. 090–0182

SHEET S-15 OF S-194 SHEETS

F.A.P. RTE.	SECTION	COUNTY	TOTAL SHEETS	SHEET NO.
VAR.	13 (HVB, HB-3) BR-1;R	TAZEWELL	1173	541
		CONTRACT NO. 68C55		
	ILLINOIS	FED. AID PROJECT		

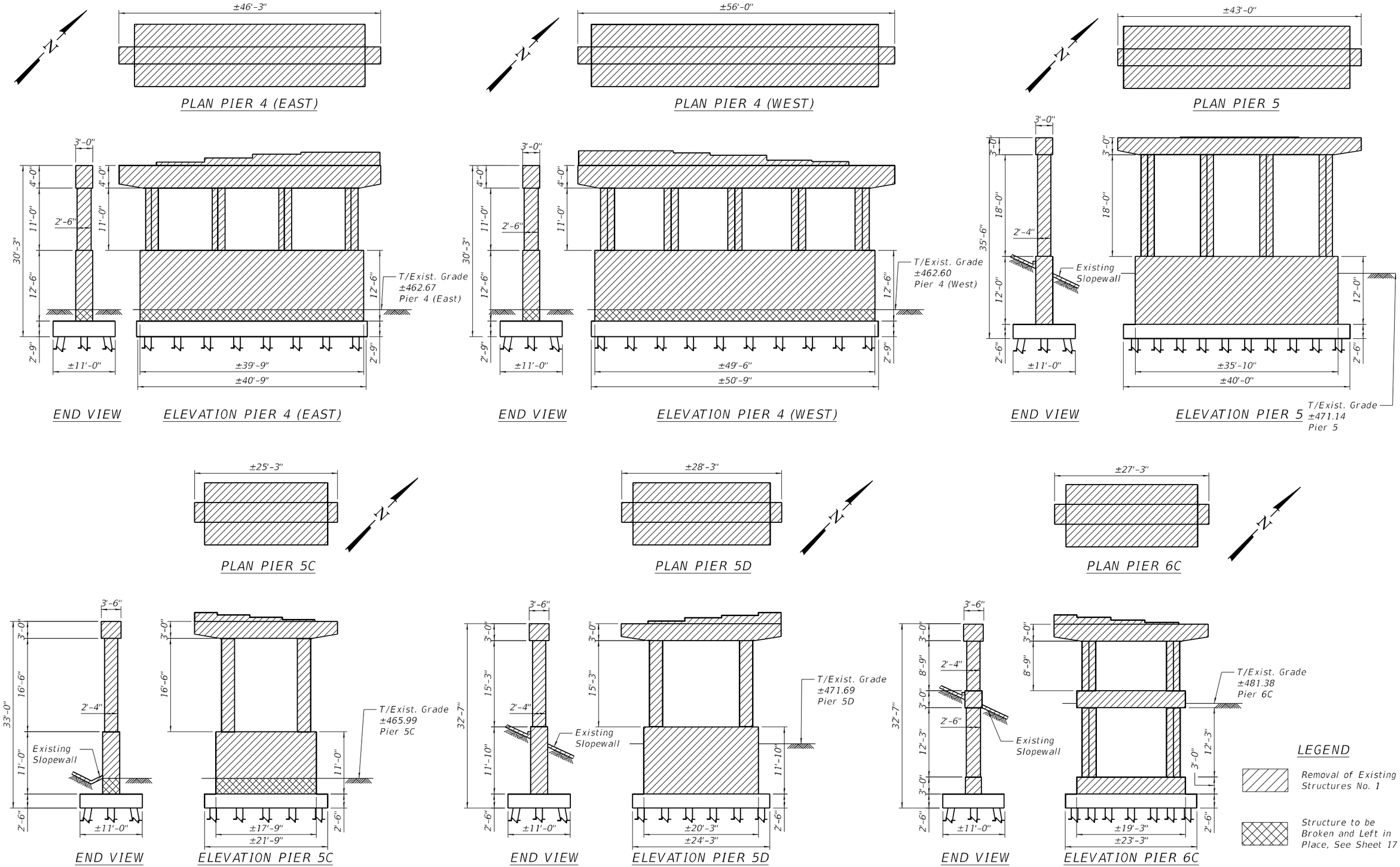

MODEL: Default
FILE NAME: pw:\\mbs-ucs-pw.bentley.commbs-ucs-pw-03\Documents\Chicago IL\01 Projects\179740 IDOT Ceda-SFEx PhII5.0 CADD\CAD Sheets\0900182-68C55-016-SubRem4.dgn

Michael Baker INTERNATIONAL
200 W Adams Street
Suite 1800
Chicago, IL 60606
P:+1 312,707,8770
FAX: 312,707,8804

USER NAME = DLamb	DESIGNED - JMK	REVISED -	
	CHECKED - MLK	REVISED -	
PLOT SCALE = 0:2,0000 ':" / in.	DRAWN - DMJ	REVISED -	
PLOT DATE = 6/6/2023	CHECKED - MLK	REVISED -	

STATE OF ILLINOIS
DEPARTMENT OF TRANSPORTATION

EXISTING SUBSTRUCTURE REMOVAL 4
STRUCTURE NO. 090-0182

SHEET S-16 OF S-194 SHEETS

F.A.P. RTE.	SECTION	COUNTY	TOTAL SHEETS	SHEET NO.
VAR.	13 (HVB, HB-3) BR-1;R	TAZEWELL	1173	542
		CONTRACT NO. 68C55		
	ILLINOIS	FED. AID PROJECT		

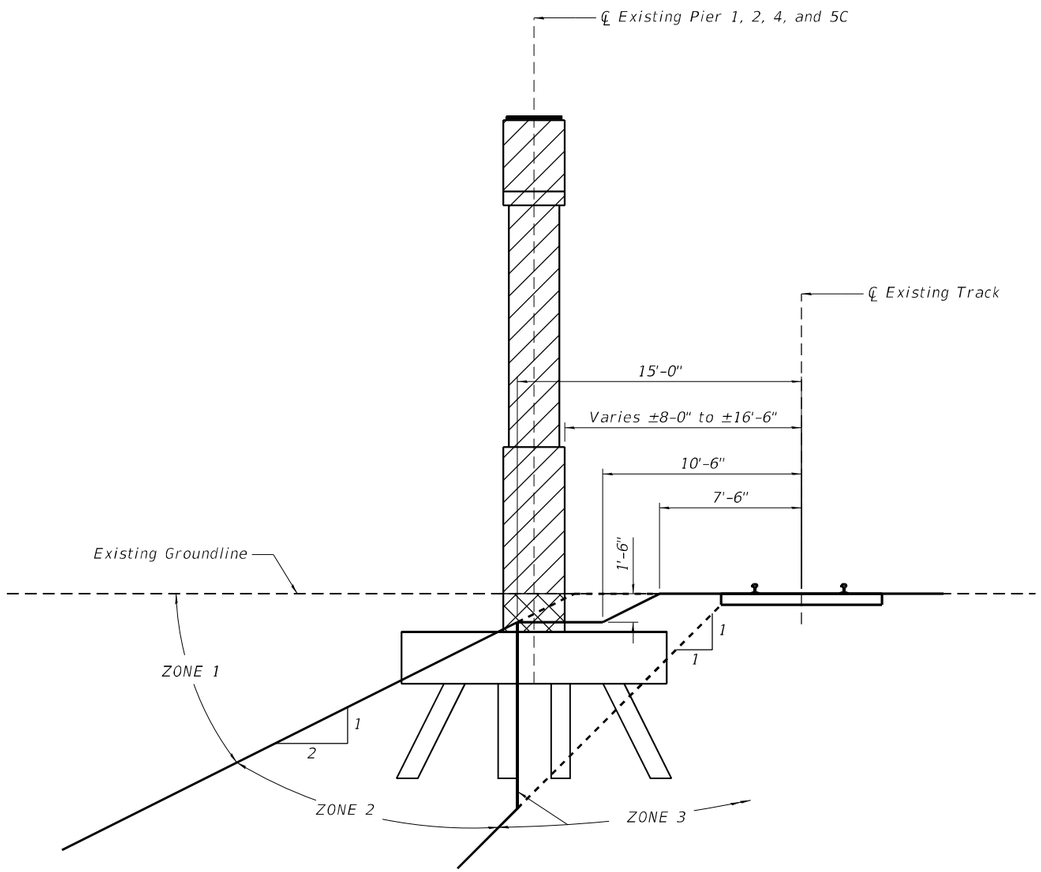

PIER REMOVAL DETAIL 1 - LOOKING ALONG ℄ EXISTING TRACK

Where existing track is too close to existing pier for full removal of existing crash wall
All dimensions are Rt. L's to ℄ Track

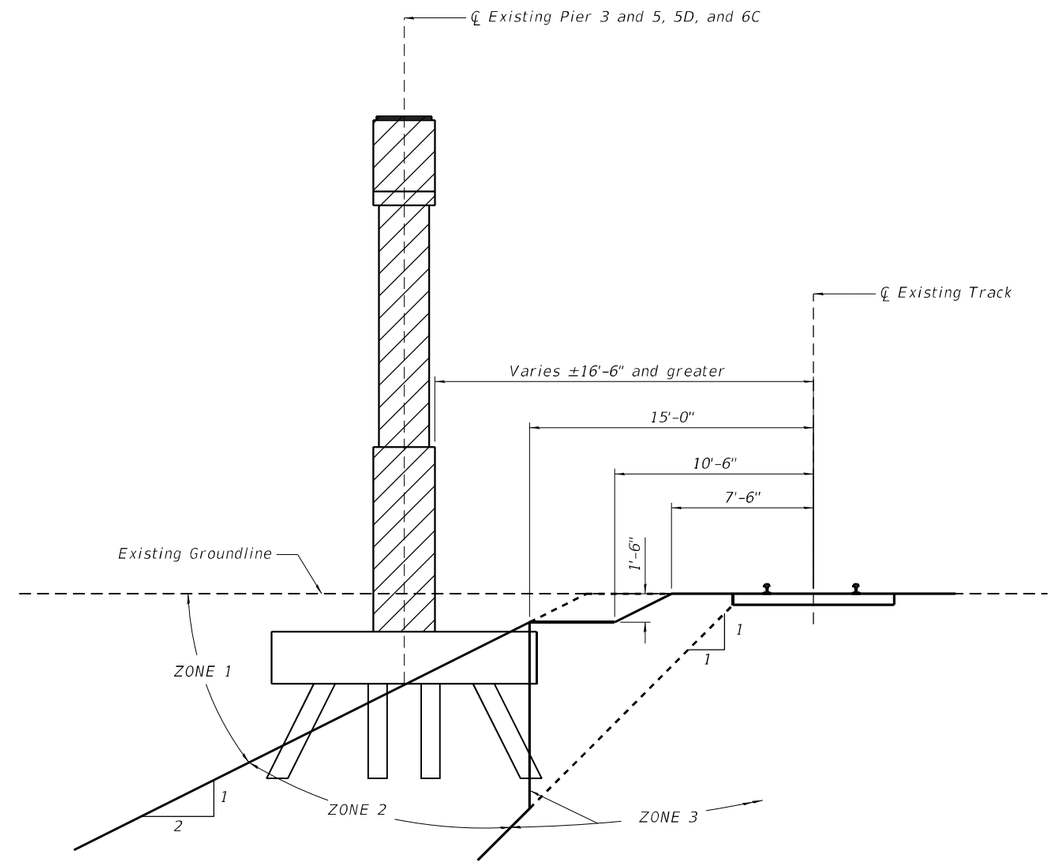

PIER REMOVAL DETAIL 2 - LOOKING ALONG ℄ EXISTING TRACK

Where existing track is far enough from existing pier for full removal of existing crash wall
All dimensions are Rt. L's to ℄ Track

NOTES:

1. Zone 1: Excavations above and outside of the theoretical railroad embankment line do not normally require shoring to protect railroad roadbed. Shoring may be required for other reasons.
2. Zone 2: Excavtions whose bottoms extend into Zone 2 require shoring, but the shoring may normally be pulled back after excavation has been backfilled.
3. Excavations whose bottoms extend into Zone 3 will normally require shoring to be left inplace and cut-off 3 feet below base of rail. Shoring must be designed for Cooper E80 live load.

LEGEND

Removal of Existing Structures No. 1

Structure to be Broken and Left in Place.

Michael Baker INTERNATIONAL
200 W Adams Street
Suite 1800
Chicago, IL 60606
PH: 312.707.8772
FAX: 312.707.8804

USER NAME = DLamb	DESIGNED - JMK	REVISED -	
	CHECKED - MLK	REVISED -	
PLOT SCALE = 0:20000 ':" / in.	DRAWN - DMJ	REVISED -	
PLOT DATE = 6/6/2023	CHECKED - MLK	REVISED -	

STATE OF ILLINOIS
DEPARTMENT OF TRANSPORTATION

EXISTING SUBSTRUCTURE REMOVAL 5
STRUCTURE NO. 090-0182

SHEET S-17 OF S-194 SHEETS

F.A.P. RTE.	SECTION	COUNTY	TOTAL SHEETS	SHEET NO.
VAR.	13 (HVB, HB-3) BR-1;R	TAZEWELL	1173	543
		CONTRACT NO. 68C55		
	ILLINOIS	FED. AID PROJECT		

Girder No.	DEAD LOAD DEFLECTIONS				
	SPAN 1				
	A1	A2	A3	A4	A5
1	1 ¼"	1 ⅛"	¼"	40' -7 ¼"	162' -4 ⅞"
2	1 ⅛"	1 ⅛"	⅛"	40' -7 ¼"	162' -4 ⅞"
3	1 ⅛"	1 ⅛"	⅛"	40' -7 ¼"	162' -4 ⅞"
4	- ¼"	- ⅜"	- ⅜"	16' -7 ½"	66' -6 ⅛"
5	-	-	-	-	-
6	1 ¼"	1 ⅛"	⅛"	40' -7"	162' -4"
7	1 ¼"	1 ⅛"	¼"	40' -7"	162' -4"
8	1 ¼"	1 ¼"	¼"	40' -7"	162' -4"

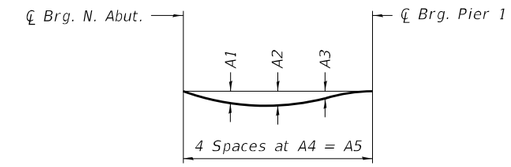

DEAD LOAD DEFLECTION DIAGRAM

(Includes weight of concrete only.)

Note:
The above deflections are not to be used in the field if the engineer is working from the grade elevations adjusted for dead load deflections and grinding as shown on S-19 & S-20.

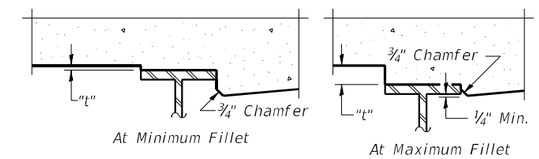

To determine "t": After all structural steel has been erected, elevations of the top flanges of the beams shall be taken at intervals shown below. These elevations subtracted from the "Theoretical Grade Elevations Adjusted for Dead Load Deflection and Grinding" shown on S-19 & S-20, minus the initial slab thickness prior to grinding, equals the fillet heights "t" above top flange of beams.

The slab is to be ground after curing to achieve smoothness, but the slab is not to be ground to elevations below the "Theoretical Grade Elevations" shown below. For grinding the deck, see Special Provisions.

FILLET HEIGHTS

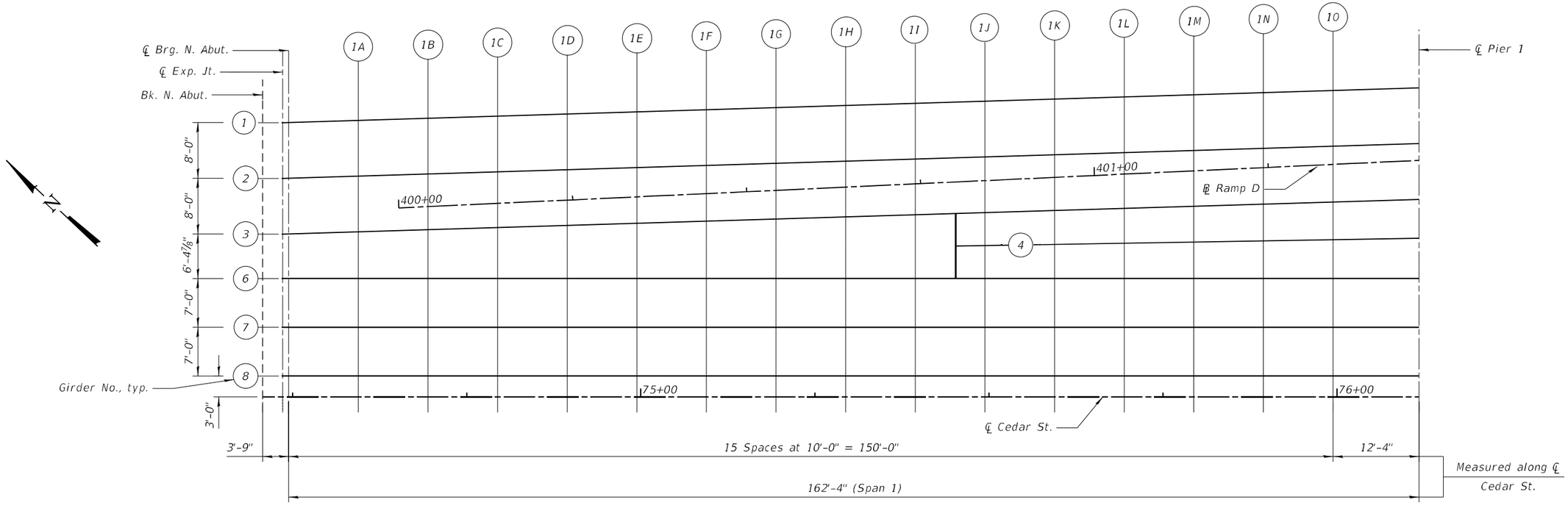

PLAN - SPAN 1

GIRDER 1

Location	Station	Offset	Theoretical Grade Elevations	Theoretical Grade Elevations Adjusted for Dead Load Deflection and Grinding
Bk. N. Abut.	74+45.68	-39.30	487.22	487.24
CL Exp. Jt.	74+47.91	-39.37	487.28	487.30
CL Brg. N. Abut.	74+49.43	-39.41	487.32	487.34
1A	74+59.43	-39.72	487.58	487.63
1B	74+69.43	-40.03	487.83	487.91
1C	74+79.43	-40.33	488.07	488.17
1D	74+89.43	-40.64	488.31	488.42
1E	74+99.43	-40.94	488.54	488.67
1F	75+09.43	-41.25	488.76	488.90
1G	75+19.43	-41.55	488.99	489.12
1H	75+29.43	-41.86	489.22	489.34
1I	75+39.43	-42.16	489.45	489.55
1J	75+49.43	-42.47	489.68	489.76
1K	75+59.43	-42.78	489.91	489.97
1L	75+69.43	-43.08	490.14	490.18
1M	75+79.43	-43.39	490.37	490.39
1N	75+89.43	-43.69	490.60	490.61
1O	75+99.43	-44.00	490.82	490.84
CL Pier 1	76+11.76	-44.37	491.11	491.13

GIRDER 2

Location	Station	Offset	Theoretical Grade Elevations	Theoretical Grade Elevations Adjusted for Dead Load Deflection and Grinding
Bk. N. Abut.	74+45.68	-31.30	487.38	487.40
CL Exp. Jt.	74+47.91	-31.36	487.44	487.46
CL Brg. N. Abut.	74+49.43	-31.41	487.48	487.50
1A	74+59.43	-31.72	487.74	487.79
1B	74+69.43	-32.02	487.99	488.07
1C	74+79.43	-32.33	488.23	488.33
1D	74+89.43	-32.63	488.47	488.58
1E	74+99.43	-32.94	488.70	488.82
1F	75+09.43	-33.24	488.93	489.06
1G	75+19.43	-33.55	489.15	489.28
1H	75+29.43	-33.85	489.38	489.50
1I	75+39.43	-34.16	489.61	489.71
1J	75+49.43	-34.47	489.84	489.92
1K	75+59.43	-34.77	490.07	490.13
1L	75+69.43	-35.08	490.30	490.34
1M	75+79.43	-35.38	490.53	490.55
1N	75+89.43	-35.69	490.76	490.77
1O	75+99.43	-35.99	490.99	491.00
CL Pier 1	76+11.76	-36.37	491.27	491.29

GIRDER 3

Location	Station	Offset	Theoretical Grade Elevations	Theoretical Grade Elevations Adjusted for Dead Load Deflection and Grinding
Bk. N. Abut.	74+45.68	-23.29	487.54	487.56
CL Exp. Jt.	74+47.91	-23.36	487.60	487.62
CL Brg. N. Abut.	74+49.43	-23.41	487.64	487.66
1A	74+59.43	-23.71	487.90	487.95
1B	74+69.43	-24.02	488.15	488.23
1C	74+79.43	-24.32	488.39	488.49
1D	74+89.43	-24.63	488.63	488.74
1E	74+99.43	-24.93	488.86	488.98
1F	75+09.43	-25.24	489.09	489.22
1G	75+19.43	-25.55	489.31	489.44
1H	75+29.43	-25.85	489.54	489.66
1I	75+39.43	-26.16	489.77	489.87
1J	75+49.43	-26.46	490.00	490.08
1K	75+59.43	-26.77	490.23	490.28
1L	75+69.43	-27.07	490.46	490.49
1M	75+79.43	-27.38	490.69	490.71
1N	75+89.43	-27.68	490.92	490.93
1O	75+99.43	-27.99	491.15	491.15
CL Pier 1	76+11.76	-28.37	491.43	491.45

GIRDER 4

Location	Station	Offset	Theoretical Grade Elevations	Theoretical Grade Elevations Adjusted for Dead Load Deflection and Grinding
Start of Girder	75+45.26	-21.67	490.00	490.02
1J	75+49.43	-21.74	490.10	490.11
1K	75+59.43	-21.90	490.33	490.33
1L	75+69.43	-22.07	490.56	490.55
1M	75+79.43	-22.23	490.79	490.78
1N	75+89.43	-22.40	491.02	491.01
1O	75+99.43	-22.56	491.25	491.25
CL Pier 1	76+11.76	-22.77	491.54	491.56

GIRDER 6

Location	Station	Offset	Theoretical Grade Elevations	Theoretical Grade Elevations Adjusted for Dead Load Deflection and Grinding
Bk. N. Abut.	74+45.68	-17.00	487.67	487.69
CL Exp. Jt.	74+47.91	-17.00	487.73	487.75
CL Brg. N. Abut.	74+49.43	-17.00	487.77	487.79
1A	74+59.43	-17.00	488.03	488.09
1B	74+69.43	-17.00	488.29	488.37
1C	74+79.43	-17.00	488.54	488.64
1D	74+89.43	-17.00	488.78	488.90
1E	74+99.43	-17.00	489.01	489.14
1F	75+09.43	-17.00	489.25	489.38
1G	75+19.43	-17.00	489.48	489.61
1H	75+29.43	-17.00	489.72	489.84
1I	75+39.43	-17.00	489.95	490.05
1J	75+49.43	-17.00	490.19	490.27
1K	75+59.43	-17.00	490.42	490.48
1L	75+69.43	-17.00	490.66	490.70
1M	75+79.43	-17.00	490.89	490.92
1N	75+89.43	-17.00	491.13	491.14
1O	75+99.43	-17.00	491.36	491.38
CL Pier 1	76+11.76	-17.00	491.65	491.68

GIRDER 7

Location	Station	Offset	Theoretical Grade Elevations	Theoretical Grade Elevations Adjusted for Dead Load Deflection and Grinding
Bk. N. Abut.	74+45.68	-10.00	487.81	487.83
CL Exp. Jt.	74+47.91	-10.00	487.87	487.89
CL Brg. N. Abut.	74+49.43	-10.00	487.91	487.93
1A	74+59.43	-10.00	488.17	488.23
1B	74+69.43	-10.00	488.43	488.51
1C	74+79.43	-10.00	488.68	488.78
1D	74+89.43	-10.00	488.92	489.04
1E	74+99.43	-10.00	489.15	489.29
1F	75+09.43	-10.00	489.39	489.52
1G	75+19.43	-10.00	489.62	489.75
1H	75+29.43	-10.00	489.86	489.98
1I	75+39.43	-10.00	490.09	490.20
1J	75+49.43	-10.00	490.33	490.41
1K	75+59.43	-10.00	490.56	490.62
1L	75+69.43	-10.00	490.80	490.84
1M	75+79.43	-10.00	491.03	491.06
1N	75+89.43	-10.00	491.27	491.28
1O	75+99.43	-10.00	491.50	491.52
CL Pier 1	76+11.76	-10.00	491.79	491.82

GIRDER 8

Location	Station	Offset	Theoretical Grade Elevations	Theoretical Grade Elevations Adjusted for Dead Load Deflection and Grinding
Bk. N. Abut.	74+45.68	-3.00	487.95	487.97
CL Exp. Jt.	74+47.91	-3.00	488.01	488.03
CL Brg. N. Abut.	74+49.43	-3.00	488.05	488.07
1A	74+59.43	-3.00	488.31	488.37
1B	74+69.43	-3.00	488.57	488.65
1C	74+79.43	-3.00	488.82	488.92
1D	74+89.43	-3.00	489.06	489.18
1E	74+99.43	-3.00	489.29	489.43
1F	75+09.43	-3.00	489.53	489.67
1G	75+19.43	-3.00	489.76	489.90
1H	75+29.43	-3.00	490.00	490.12
1I	75+39.43	-3.00	490.23	490.34
1J	75+49.43	-3.00	490.47	490.55
1K	75+59.43	-3.00	490.70	490.77
1L	75+69.43	-3.00	490.94	490.98
1M	75+79.43	-3.00	491.17	491.20
1N	75+89.43	-3.00	491.41	491.43
1O	75+99.43	-3.00	491.64	491.66
CL Pier 1	76+11.76	-3.00	491.93	491.96

℄ CEDAR ST

Location	Station	Offset	Theoretical Grade Elevations	Theoretical Grade Elevations Adjusted for Dead Load Deflection and Grinding
Bk. N. Abut.	74+45.68	0.00	488.01	488.03
CL Exp. Jt.	74+47.91	0.00	488.07	488.09
CL Brg. N. Abut.	74+49.43	0.00	488.11	488.13
1A	74+59.43	0.00	488.37	488.40
1B	74+69.43	0.00	488.63	488.65
1C	74+79.43	0.00	488.88	488.90
1D	74+89.43	0.00	489.12	489.14
1E	74+99.43	0.00	489.35	489.38
1F	75+09.43	0.00	489.59	489.61
1G	75+19.43	0.00	489.82	489.85
1H	75+29.43	0.00	490.06	490.08
1I	75+39.43	0.00	490.29	490.32
1J	75+49.43	0.00	490.53	490.55
1K	75+59.43	0.00	490.76	490.79
1L	75+69.43	0.00	491.00	491.02
1M	75+79.43	0.00	491.23	491.26
1N	75+89.43	0.00	491.47	491.49
1O	75+99.43	0.00	491.70	491.73
CL Pier 1	76+11.76	0.00	491.99	492.02

Girder No.	DEAD LOAD DEFLECTIONS SPAN 2				
	B1	B2	B3	B4	B5
1	3 1/8"	5 1/8"	3"	61' -0 3/8"	244' -1 3/8"
2	3"	4 7/8"	2 7/8"	61' -0 3/8"	244' -1 3/8"
3	2 7/8"	4 3/4"	2 3/4"	61' -0 3/8"	244' -1 3/8"
4	2 3/4"	4 1/2"	2 5/8"	61' -0 1/8"	244' -0 3/4"
5	- 1/8"	- 1/8"	- 1/8"	10' -10 1/2"	43' -6"
6	2 5/8"	4 3/8"	2 1/2"	61' -0"	244' -0"
7	2 5/8"	4 1/4"	2 3/8"	61' -0"	244' -0"
8	2 1/2"	4 1/4"	2 3/8"	61' -0"	244' -0"

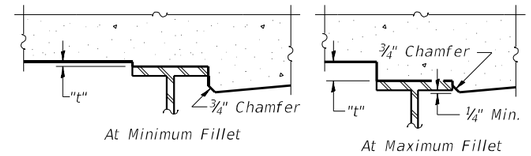

To determine "t": After all structural steel has been erected, elevations of the top flanges of the beams shall be taken at intervals shown below. These elevations subtracted from the "Theoretical Grade Elevations Adjusted for Dead Load Deflection and Grinding" shown on S-22 & S-23, minus the initial slab thickness prior to grinding, equals the fillet heights "t" above top flange of beams.

The slab is to be ground after curing to achieve smoothness, but the slab is not to be ground to elevations below the "Theoretical Grade Elevations" shown below. For grinding the deck, see Special Provisions.

FILLET HEIGHTS

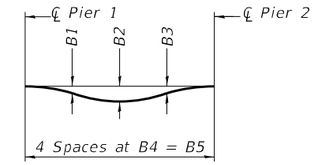

DEAD LOAD DEFLECTION DIAGRAM

(Includes weight of concrete only.)

Note:
The above deflections are not to be used in the field if the engineer is working from the grade elevations adjusted for dead load deflections as shown on S-22 & S-23.

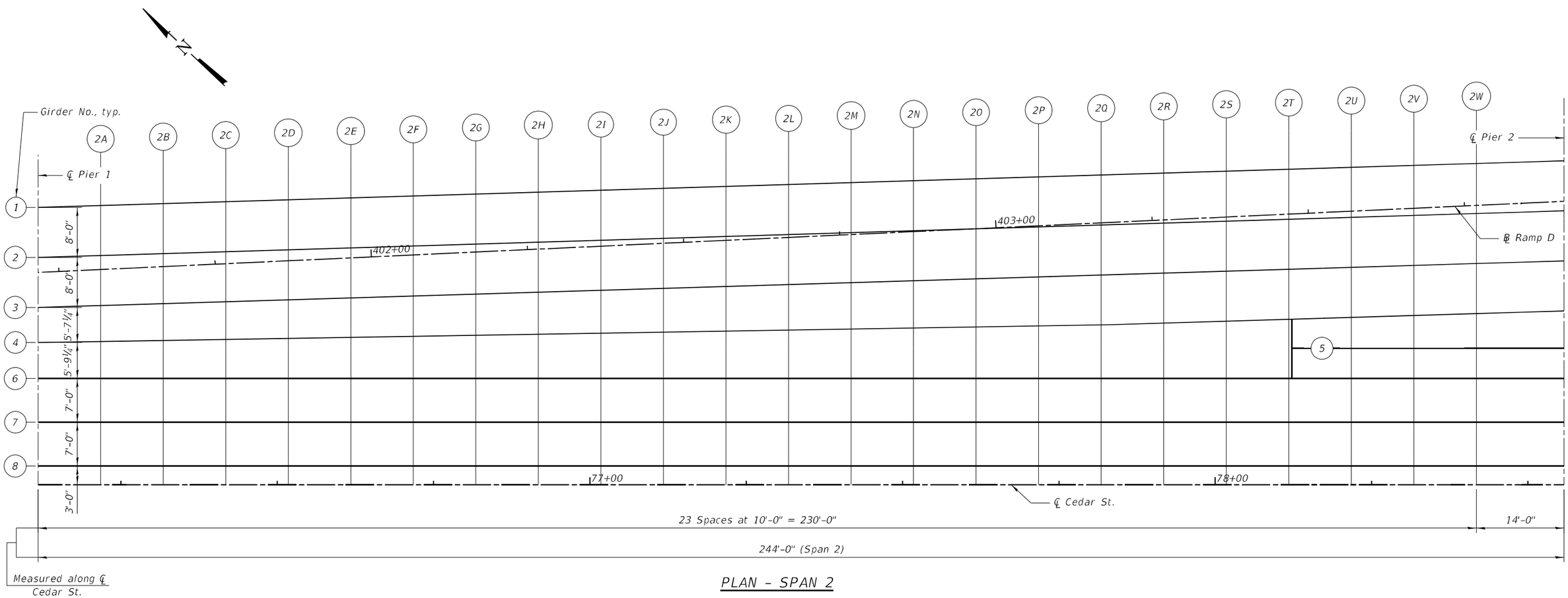

PLAN - SPAN 2

GIRDER 1

Location	Station	Offset	Theoretical Grade Elevations	Theoretical Grade Elevations Adjusted for Dead Load Deflection and Grinding
CL Pier 1	76+11.76	-44.37	491.11	491.13
2A	76+21.76	-44.68	491.34	491.38
2B	76+31.76	-44.99	491.56	491.65
2C	76+41.76	-45.29	491.79	491.92
2D	76+51.76	-45.60	492.02	492.20
2E	76+61.76	-45.90	492.25	492.48
2F	76+71.76	-46.21	492.48	492.76
2G	76+81.76	-46.51	492.71	493.03
2H	76+91.76	-46.82	492.94	493.30
2I	77+01.76	-47.12	493.17	493.57
2J	77+11.76	-47.43	493.40	493.82
2K	77+21.76	-47.74	493.62	494.07
2L	77+31.76	-48.04	493.85	494.30
2M	77+41.76	-48.35	494.08	494.53
2N	77+51.76	-48.65	494.31	494.74
2O	77+61.76	-48.96	494.54	494.95
2P	77+71.76	-49.26	494.77	495.14
2Q	77+81.76	-49.57	495.00	495.33
2R	77+91.76	-49.87	495.23	495.51
2S	78+01.76	-50.18	495.46	495.69
2T	78+11.76	-50.49	495.68	495.87
2U	78+21.76	-50.79	495.91	496.05
2V	78+31.76	-51.10	496.14	496.24
2W	78+41.76	-51.40	496.37	496.43
CL Pier 2	78+55.76	-51.83	496.69	496.71

GIRDER 2

Location	Station	Offset	Theoretical Grade Elevations	Theoretical Grade Elevations Adjusted for Dead Load Deflection and Grinding
CL Pier 1	76+11.76	-36.37	491.27	491.29
2A	76+21.76	-36.68	491.50	491.54
2B	76+31.76	-36.98	491.73	491.80
2C	76+41.76	-37.29	491.95	492.07
2D	76+51.76	-37.59	492.18	492.35
2E	76+61.76	-37.90	492.41	492.63
2F	76+71.76	-38.20	492.64	492.90
2G	76+81.76	-38.51	492.87	493.18
2H	76+91.76	-38.82	493.10	493.45
2I	77+01.76	-39.12	493.33	493.71
2J	77+11.76	-39.43	493.56	493.97
2K	77+21.76	-39.73	493.79	494.21
2L	77+31.76	-40.04	494.01	494.44
2M	77+41.76	-40.34	494.24	494.67
2N	77+51.76	-40.65	494.47	494.88
2O	77+61.76	-40.95	494.70	495.09
2P	77+71.76	-41.26	494.93	495.28
2Q	77+81.76	-41.57	495.16	495.47
2R	77+91.76	-41.87	495.39	495.66
2S	78+01.76	-42.18	495.62	495.84
2T	78+11.76	-42.48	495.85	496.02
2U	78+21.76	-42.79	496.07	496.20
2V	78+31.76	-43.09	496.30	496.39
2W	78+41.76	-43.40	496.53	496.59
CL Pier 2	78+55.76	-43.83	496.85	496.87

GIRDER 3

Location	Station	Offset	Theoretical Grade Elevations	Theoretical Grade Elevations Adjusted for Dead Load Deflection and Grinding
CL Pier 1	76+11.76	-28.37	491.43	491.45
2A	76+21.76	-28.67	491.66	491.70
2B	76+31.76	-28.98	491.89	491.96
2C	76+41.76	-29.28	492.11	492.23
2D	76+51.76	-29.59	492.34	492.50
2E	76+61.76	-29.89	492.57	492.78
2F	76+71.76	-30.20	492.80	493.05
2G	76+81.76	-30.51	493.03	493.33
2H	76+91.76	-30.81	493.26	493.60
2I	77+01.76	-31.12	493.49	493.86
2J	77+11.76	-31.42	493.72	494.11
2K	77+21.76	-31.73	493.95	494.35
2L	77+31.76	-32.03	494.17	494.59
2M	77+41.76	-32.34	494.40	494.81
2N	77+51.76	-32.64	494.63	495.03
2O	77+61.76	-32.95	494.86	495.23
2P	77+71.76	-33.26	495.09	495.43
2Q	77+81.76	-33.56	495.32	495.62
2R	77+91.76	-33.87	495.55	495.81
2S	78+01.76	-34.17	495.78	495.99
2T	78+11.76	-34.48	496.01	496.17
2U	78+21.76	-34.78	496.23	496.36
2V	78+31.76	-35.09	496.46	496.55
2W	78+41.76	-35.39	496.69	496.75
CL Pier 2	78+55.76	-35.82	497.01	497.03

GIRDER 4

Location	Station	Offset	Theoretical Grade Elevations	Theoretical Grade Elevations Adjusted for Dead Load Deflection and Grinding
CL Pier 1	76+11.76	-22.77	491.54	491.56
2A	76+21.76	-22.93	491.77	491.82
2B	76+31.76	-23.10	492.00	492.08
2C	76+41.76	-23.26	492.23	492.35
2D	76+51.76	-23.43	492.47	492.62
2E	76+61.76	-23.59	492.70	492.90
2F	76+71.76	-23.76	492.93	493.18
2G	76+81.76	-23.92	493.16	493.45
2H	76+91.76	-24.09	493.39	493.72
2I	77+01.76	-24.25	493.62	493.98
2J	77+11.76	-24.42	493.86	494.24
2K	77+21.76	-24.59	494.09	494.48
2L	77+31.76	-24.75	494.32	494.72
2M	77+41.76	-24.92	494.55	494.95
2N	77+51.76	-25.08	494.78	495.17
2O	77+61.76	-25.25	495.01	495.37
2P	77+71.76	-25.41	495.25	495.57
2Q	77+81.76	-25.58	495.48	495.77
2R	77+91.76	-25.86	495.71	495.96
2S	78+01.76	-26.17	495.94	496.14
2T	78+11.76	-26.47	496.17	496.32
2U	78+21.76	-26.78	496.39	496.51
2V	78+31.76	-27.09	496.62	496.70
2W	78+41.76	-27.39	496.85	496.90
CL Pier 2	78+55.76	-27.82	497.17	497.19

GIRDER 5

Location	Station	Offset	Theoretical Grade Elevations	Theoretical Grade Elevations Adjusted for Dead Load Deflection and Grinding
Start of Girder	78+12.26	-21.83	496.27	496.29
2U	78+21.76	-21.83	496.49	496.51
2V	78+31.76	-21.83	496.73	496.74
2W	78+41.76	-21.83	496.96	496.97
CL Pier 2	78+55.76	-21.83	497.29	497.31

GIRDER 6

Location	Station	Offset	Theoretical Grade Elevations	Theoretical Grade Elevations Adjusted for Dead Load Deflection and Grinding
CL Pier 1	76+11.76	-17.00	491.65	491.68
2A	76+21.76	-17.00	491.89	491.93
2B	76+31.76	-17.00	492.12	492.20
2C	76+41.76	-17.00	492.36	492.47
2D	76+51.76	-17.00	492.59	492.75
2E	76+61.76	-17.00	492.83	493.03
2F	76+71.76	-17.00	493.06	493.30
2G	76+81.76	-17.00	493.30	493.58
2H	76+91.76	-17.00	493.53	493.85
2I	77+01.76	-17.00	493.77	494.12
2J	77+11.76	-17.00	494.00	494.38
2K	77+21.76	-17.00	494.24	494.62
2L	77+31.76	-17.00	494.47	494.86
2M	77+41.76	-17.00	494.71	495.09
2N	77+51.76	-17.00	494.94	495.32
2O	77+61.76	-17.00	495.18	495.53
2P	77+71.76	-17.00	495.41	495.73
2Q	77+81.76	-17.00	495.65	495.93
2R	77+91.76	-17.00	495.88	496.12
2S	78+01.76	-17.00	496.12	496.32
2T	78+11.76	-17.00	496.35	496.51
2U	78+21.76	-17.00	496.59	496.70
2V	78+31.76	-17.00	496.82	496.90
2W	78+41.76	-17.00	497.06	497.11
CL Pier 2	78+55.76	-17.00	497.39	497.41

GIRDER 7

Location	Station	Offset	Theoretical Grade Elevations	Theoretical Grade Elevations Adjusted for Dead Load Deflection and Grinding
CL Pier 1	76+11.76	-10.00	491.79	491.82
2A	76+21.76	-10.00	492.03	492.07
2B	76+31.76	-10.00	492.26	492.34
2C	76+41.76	-10.00	492.50	492.61
2D	76+51.76	-10.00	492.73	492.88
2E	76+61.76	-10.00	492.97	493.16
2F	76+71.76	-10.00	493.20	493.44
2G	76+81.76	-10.00	493.44	493.71
2H	76+91.76	-10.00	493.67	493.98
2I	77+01.76	-10.00	493.91	494.25
2J	77+11.76	-10.00	494.14	494.51
2K	77+21.76	-10.00	494.38	494.75
2L	77+31.76	-10.00	494.61	494.99
2M	77+41.76	-10.00	494.85	495.22
2N	77+51.76	-10.00	495.08	495.45
2O	77+61.76	-10.00	495.32	495.66
2P	77+71.76	-10.00	495.55	495.86
2Q	77+81.76	-10.00	495.79	496.06
2R	77+91.76	-10.00	496.02	496.26
2S	78+01.76	-10.00	496.26	496.45
2T	78+11.76	-10.00	496.49	496.65
2U	78+21.76	-10.00	496.73	496.84
2V	78+31.76	-10.00	496.96	497.04
2W	78+41.76	-10.00	497.20	497.25
CL Pier 2	78+55.76	-10.00	497.53	497.55

GIRDER 8

Location	Station	Offset	Theoretical Grade Elevations	Theoretical Grade Elevations Adjusted for Dead Load Deflection and Grinding
CL Pier 1	76+11.76	-3.00	491.93	491.96
2A	76+21.76	-3.00	492.17	492.21
2B	76+31.76	-3.00	492.40	492.47
2C	76+41.76	-3.00	492.64	492.74
2D	76+51.76	-3.00	492.87	493.02
2E	76+61.76	-3.00	493.11	493.29
2F	76+71.76	-3.00	493.34	493.57
2G	76+81.76	-3.00	493.58	493.85
2H	76+91.76	-3.00	493.81	494.12
2I	77+01.76	-3.00	494.05	494.38
2J	77+11.76	-3.00	494.28	494.64
2K	77+21.76	-3.00	494.52	494.89
2L	77+31.76	-3.00	494.75	495.13
2M	77+41.76	-3.00	494.99	495.36
2N	77+51.76	-3.00	495.22	495.58
2O	77+61.76	-3.00	495.46	495.79
2P	77+71.76	-3.00	495.69	496.00
2Q	77+81.76	-3.00	495.93	496.20
2R	77+91.76	-3.00	496.16	496.39
2S	78+01.76	-3.00	496.40	496.59
2T	78+11.76	-3.00	496.63	496.78
2U	78+21.76	-3.00	496.87	496.98
2V	78+31.76	-3.00	497.10	497.18
2W	78+41.76	-3.00	497.34	497.39
CL Pier 2	78+55.76	-3.00	497.67	497.69

℄ CEDAR ST

Location	Station	Offset	Theoretical Grade Elevations	Theoretical Grade Elevations Adjusted for Dead Load Deflection and Grinding
CL Pier 1	76+11.76	0.0	491.99	492.02
2A	76+21.76	0.00	492.23	492.25
2B	76+31.76	0.00	492.46	492.49
2C	76+41.76	0.00	492.70	492.72
2D	76+51.76	0.00	492.93	492.96
2E	76+61.76	0.00	493.17	493.19
2F	76+71.76	0.00	493.40	493.43
2G	76+81.76	0.00	493.64	493.66
2H	76+91.76	0.00	493.87	493.90
2I	77+01.76	0.00	494.11	494.13
2J	77+11.76	0.00	494.34	494.37
2K	77+21.76	0.00	494.58	494.60
2L	77+31.76	0.00	494.81	494.84
2M	77+41.76	0.00	495.05	495.07
2N	77+51.76	0.00	495.28	495.31
2O	77+61.76	0.00	495.52	495.54
2P	77+71.76	0.00	495.75	495.78
2Q	77+81.76	0.00	495.99	496.01
2R	77+91.76	0.00	496.22	496.25
2S	78+01.76	0.00	496.46	496.48
2T	78+11.76	0.00	496.69	496.72
2U	78+21.76	0.00	496.93	496.95
2V	78+31.76	0.00	497.16	497.19
2W	78+41.76	0.00	497.40	497.42
CL Pier 2	78+55.76	0.00	497.73	497.75

Girder No.	DEAD LOAD DEFLECTIONS				
	SPAN 3				
	C1	C2	C3	C4	C5
1	3/8"	1 1/2"	1"	49' -0 5/8"	196' -2 3/8"
2	3/8"	1 3/8"	3/4"	49' -3 3/8"	197' -1 3/4"
3	3/8"	1 3/8"	5/8"	49' -6 1/4"	198' -1 1/8"
4	3/8"	1 3/8"	1/2"	49' -9 1/8"	199' -0 1/2"
5	3/8"	1 1/4"	3/4"	50' -0"	200' -0 1/8"
6	3/8"	1 1/4"	3/4"	50' - 0"	200' - 0"
7	3/8"	1 1/4"	3/4"	50' - 0"	200' - 0"
8	3/8"	1 1/4"	3/4"	50' - 0"	200' - 0"

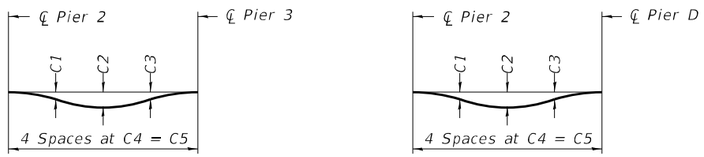

DEAD LOAD DEFLECTION DIAGRAM

(Includes weight of concrete only.)

Note:
The above deflections are not to be used in the field if the engineer is working from the grade elevations adjusted for dead load deflections and grinding as shown on S-25 & S-26.

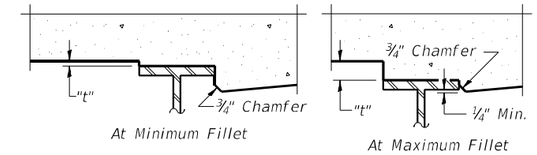

To determine "t": After all structural steel has been erected, elevations of the top flanges of the beams shall be taken at intervals shown below. These elevations subtracted from the "Theoretical Grade Elevations Adjusted for Dead Load Deflection and Grinding" shown on S-25 & S-26, minus the initial slab thickness prior to grinding, equals the fillet heights "t" above top flange of beams.

The slab is to be ground after curing to achieve smoothness, but the slab is not to be ground to elevations below the "Theoretical Grade Elevations" shown below. For grinding the deck, see Special Provisions.

FILLET HEIGHTS

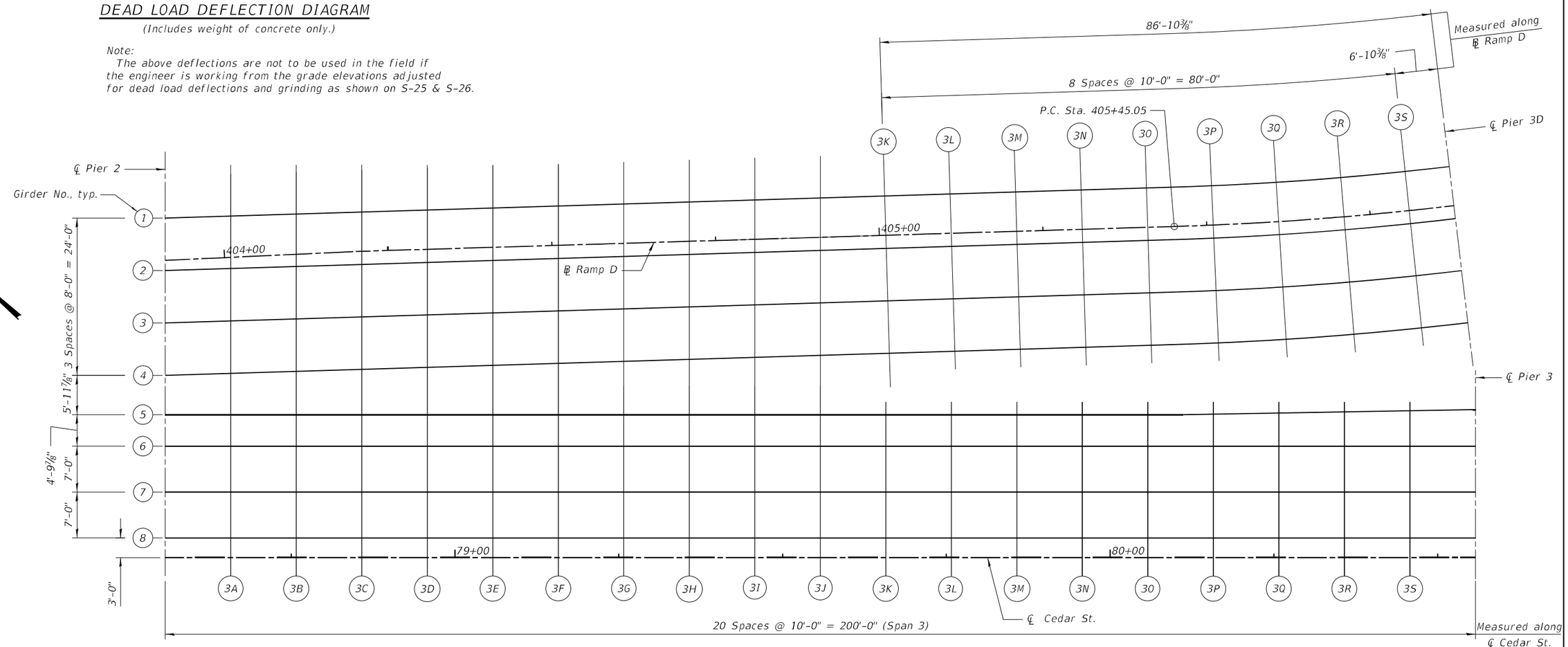

PLAN - SPAN 3

MODEL: Default
FILE NAME: pw:\\mis-is-pw.bentley.com:mb-is-pw-03\Documents\Chicago_IL\01 Projects\179740 IDOT CedarSIEx1 PhII\5.0 CADD\CAD Sheets\0900182-68C55-024-to57 LT.dgn

Michael Baker INTERNATIONAL
200 W Adams Street
Suite 1850
Chicago, IL 60606
PH: 312.707.8770
FAX: 312.707.8804

USER NAME = DLamb	DESIGNED - JMK/ADM	REVISED -
	CHECKED - AMR	REVISED -
PLOT SCALE = 15:11.9992 ':" / in.	DRAWN - DMJ	REVISED -
PLOT DATE = 6/6/2023	CHECKED - AMR	REVISED -

STATE OF ILLINOIS
DEPARTMENT OF TRANSPORTATION

LT UNIT 1 – TOP OF SLAB ELEVATION 7
STRUCTURE NO. 090–0182

SHEET S-24 OF S-194 SHEETS

F.A.P. RTE.	SECTION	COUNTY	TOTAL SHEETS	SHEET NO.
VAR.	13 (HVB, HB-3) BR-1;R	TAZEWELL	1173	550
		CONTRACT NO. 68C55		
		ILLINOIS	FED. AID PROJECT	

GIRDER 1

Location	Station	Offset	Theoretical Grade Elevations	Theoretical Grade Elevations Adjusted for Dead Load Deflection and Grinding
CL Pier 2	78+55.76	-51.83	496.69	496.71
3A	78+65.76	-52.14	496.92	496.93
3B	78+75.76	-52.44	497.15	497.16
3C	78+85.76	-52.75	497.38	497.40
3D	78+95.76	-53.05	497.61	497.64
3E	79+05.76	-53.36	497.84	497.89
3F	79+15.76	-53.66	498.07	498.14
3G	79+25.76	-53.97	498.29	498.39
3H	79+35.76	-54.27	498.52	498.64
3I	79+45.76	-54.58	498.75	498.89
3J	79+55.76	-54.89	498.98	499.12
3K	405+01.00	-6.00	499.14	499.29
3L	405+11.00	-6.00	499.24	499.38
3M	405+21.00	-6.00	499.31	499.44
3N	405+31.00	-6.00	499.35	499.47
3O	405+41.00	-6.00	499.38	499.47
3P	405+51.00	-6.00	499.38	499.45
3Q	405+61.00	-6.00	499.36	499.41
3R	405+71.00	-6.00	499.32	499.35
3S	405+81.00	-6.00	499.25	499.28
CL Pier 3D	405+87.85	-6.00	499.19	499.21

GIRDER 2

Location	Station	Offset	Theoretical Grade Elevations	Theoretical Grade Elevations Adjusted for Dead Load Deflection and Grinding
CL Pier 2	78+55.76	-43.83	496.85	496.87
3A	78+65.76	-44.13	497.08	497.09
3B	78+75.76	-44.44	497.31	497.32
3C	78+85.76	-44.74	497.54	497.56
3D	78+95.76	-45.05	497.77	497.80
3E	79+05.76	-45.35	498.00	498.05
3F	79+15.76	-45.66	498.23	498.30
3G	79+25.76	-45.97	498.45	498.55
3H	79+35.76	-46.27	498.68	498.80
3I	79+45.76	-46.58	498.91	499.04
3J	79+55.76	-46.88	499.14	499.28
3K	405+01.00	2.00	499.32	499.45
3L	405+11.00	2.00	499.44	499.57
3M	405+21.00	2.00	499.54	499.66
3N	405+31.00	2.00	499.61	499.72
3O	405+41.00	2.00	499.67	499.75
3P	405+51.00	2.00	499.70	499.76
3Q	405+61.00	2.00	499.71	499.75
3R	405+71.00	2.00	499.69	499.72
3S	405+81.00	2.00	499.66	499.68
CL Pier 3D	405+87.85	2.00	499.62	499.64

℄ RAMP D

Location	Station	Offset	Theoretical Grade Elevations	Theoretical Grade Elevations Adjusted for Dead Load Deflection and Grinding
3K	405+01.00	0.00	499.27	499.41
3L	405+11.00	0.00	499.39	499.52
3M	405+21.00	0.00	499.48	499.60
3N	405+31.00	0.00	499.55	499.65
3O	405+41.00	0.00	499.60	499.68
3P	405+51.00	0.00	499.62	499.69
3Q	405+61.00	0.00	499.62	499.67
3R	405+71.00	0.00	499.60	499.63
3S	405+81.00	0.00	499.56	499.58
CL Pier 3D	405+87.85	0.00	499.51	499.53

GIRDER 3

Location	Station	Offset	Theoretical Grade Elevations	Theoretical Grade Elevations Adjusted for Dead Load Deflection and Grinding
CL Pier 2	78+55.76	-35.82	497.01	497.03
3A	78+65.76	-36.13	497.24	497.25
3B	78+75.76	-36.43	497.47	497.48
3C	78+85.76	-36.74	497.70	497.72
3D	78+95.76	-37.04	497.93	497.96
3E	79+05.76	-37.35	498.16	498.21
3F	79+15.76	-37.66	498.39	498.46
3G	79+25.76	-37.96	498.61	498.71
3H	79+35.76	-38.27	498.84	498.96
3I	79+45.76	-38.57	499.07	499.20
3J	79+55.76	-38.88	499.30	499.44
3K	405+01.00	10.00	499.49	499.62
3L	405+11.00	10.00	499.64	499.77
3M	405+21.00	10.00	499.77	499.88
3N	405+31.00	10.00	499.87	499.97
3O	405+41.00	10.00	499.96	500.03
3P	405+51.00	10.00	500.02	500.07
3Q	405+61.00	10.00	500.05	500.09
3R	405+71.00	10.00	500.07	500.09
3S	405+81.00	10.00	500.06	500.08
CL Pier 3D	405+87.85	10.00	500.04	500.06

GIRDER 4

Location	Station	Offset	Theoretical Grade Elevations	Theoretical Grade Elevations Adjusted for Dead Load Deflection and Grinding
CL Pier 2	78+55.76	-27.82	497.17	497.19
3A	78+65.76	-28.12	497.40	497.41
3B	78+75.76	-28.43	497.63	497.64
3C	78+85.76	-28.74	497.86	497.88
3D	78+95.76	-29.04	498.09	498.12
3E	79+05.76	-29.35	498.32	498.37
3F	79+15.76	-29.65	498.55	498.62
3G	79+25.76	-29.96	498.77	498.87
3H	79+35.76	-30.26	499.00	499.12
3I	79+45.76	-30.57	499.23	499.36
3J	79+55.76	-30.87	499.46	499.59
3K	405+01.00	18.00	499.66	499.79
3L	405+11.00	18.00	499.84	499.96
3M	405+21.00	18.00	500.00	500.10
3N	405+31.00	18.00	500.13	500.22
3O	405+41.00	18.00	500.25	500.31
3P	405+51.00	18.00	500.34	500.38
3Q	405+61.00	18.00	500.40	500.43
3R	405+71.00	18.00	500.45	500.46
3S	405+81.00	18.00	500.47	500.48
CL Pier 3D	405+87.85	18.00	500.47	500.49

GIRDER 5

Location	Station	Offset	Theoretical Grade Elevations	Theoretical Grade Elevations Adjusted for Dead Load Deflection and Grinding
CL Pier 2	78+55.76	-21.83	497.29	497.31
3A	78+65.76	-21.83	497.53	497.54
3B	78+75.76	-21.83	497.76	497.78
3C	78+85.76	-21.83	498.00	498.02
3D	78+95.76	-21.83	498.23	498.27
3E	79+05.76	-21.83	498.47	498.52
3F	79+15.76	-21.83	498.70	498.77
3G	79+25.76	-21.83	498.94	499.03
3H	79+35.76	-21.83	499.17	499.28
3I	79+45.76	-21.83	499.41	499.53
3J	79+55.76	-21.83	499.64	499.77
3K	79+65.76	-21.83	499.88	500.01
3L	79+75.76	-21.83	500.11	500.24
3M	79+85.76	-21.83	500.35	500.46
3N	79+95.76	-21.83	500.58	500.68
3O	80+05.76	-21.83	500.82	500.90
3P	80+15.76	-21.91	501.05	501.11
3Q	80+25.76	-22.07	501.28	501.33
3R	80+35.76	-22.24	501.51	501.54
3S	80+45.76	-22.41	501.75	501.77
CL Pier 3	80+55.76	-22.58	501.98	502.00

GIRDER 6

Location	Station	Offset	Theoretical Grade Elevations	Theoretical Grade Elevations Adjusted for Dead Load Deflection and Grinding
CL Pier 2	78+55.76	-17.00	497.39	497.41
3A	78+65.76	-17.00	497.62	497.64
3B	78+75.76	-17.00	497.86	497.87
3C	78+85.76	-17.00	498.09	498.11
3D	78+95.76	-17.00	498.33	498.36
3E	79+05.76	-17.00	498.56	498.61
3F	79+15.76	-17.00	498.80	498.87
3G	79+25.76	-17.00	499.03	499.12
3H	79+35.76	-17.00	499.27	499.38
3I	79+45.76	-17.00	499.50	499.62
3J	79+55.76	-17.00	499.74	499.87
3K	79+65.76	-17.00	499.97	500.10
3L	79+75.76	-17.00	500.21	500.33
3M	79+85.76	-17.00	500.44	500.56
3N	79+95.76	-17.00	500.68	500.78
3O	80+05.76	-17.00	500.91	500.99
3P	80+15.76	-17.00	501.15	501.21
3Q	80+25.76	-17.00	501.38	501.43
3R	80+35.76	-17.00	501.62	501.65
3S	80+45.76	-17.00	501.85	501.88
CL Pier 3	80+55.76	-17.00	502.09	502.11

GIRDER 7

Location	Station	Offset	Theoretical Grade Elevations	Theoretical Grade Elevations Adjusted for Dead Load Deflection and Grinding
CL Pier 2	78+55.76	-10.00	497.53	497.55
3A	78+65.76	-10.00	497.76	497.78
3B	78+75.76	-10.00	498.00	498.01
3C	78+85.76	-10.00	498.23	498.26
3D	78+95.76	-10.00	498.47	498.50
3E	79+05.76	-10.00	498.70	498.75
3F	79+15.76	-10.00	498.94	499.01
3G	79+25.76	-10.00	499.17	499.26
3H	79+35.76	-10.00	499.41	499.52
3I	79+45.76	-10.00	499.64	499.76
3J	79+55.76	-10.00	499.88	500.01
3K	79+65.76	-10.00	500.11	500.24
3L	79+75.76	-10.00	500.35	500.47
3M	79+85.76	-10.00	500.58	500.70
3N	79+95.76	-10.00	500.82	500.92
3O	80+05.76	-10.00	501.05	501.13
3P	80+15.76	-10.00	501.29	501.35
3Q	80+25.76	-10.00	501.52	501.57
3R	80+35.76	-10.00	501.76	501.79
3S	80+45.76	-10.00	501.99	502.02
CL Pier 3	80+55.76	-10.00	502.23	502.25

GIRDER 8

Location	Station	Offset	Theoretical Grade Elevations	Theoretical Grade Elevations Adjusted for Dead Load Deflection and Grinding
CL Pier 2	78+55.76	-3.00	497.67	497.69
3A	78+65.76	-3.00	497.90	497.92
3B	78+75.76	-3.00	498.14	498.15
3C	78+85.76	-3.00	498.37	498.40
3D	78+95.76	-3.00	498.61	498.64
3E	79+05.76	-3.00	498.84	498.89
3F	79+15.76	-3.00	499.08	499.15
3G	79+25.76	-3.00	499.31	499.40
3H	79+35.76	-3.00	499.55	499.66
3I	79+45.76	-3.00	499.78	499.90
3J	79+55.76	-3.00	500.02	500.15
3K	79+65.76	-3.00	500.25	500.38
3L	79+75.76	-3.00	500.49	500.61
3M	79+85.76	-3.00	500.72	500.84
3N	79+95.76	-3.00	500.96	501.06
3O	80+05.76	-3.00	501.19	501.28
3P	80+15.76	-3.00	501.43	501.49
3Q	80+25.76	-3.00	501.66	501.71
3R	80+35.76	-3.00	501.90	501.93
3S	80+45.76	-3.00	502.13	502.16
CL Pier 3	80+55.76	-3.00	502.37	502.39

℄ CEDAR ST

Location	Station	Offset	Theoretical Grade Elevations	Theoretical Grade Elevations Adjusted for Dead Load Deflection and Grinding
CL Pier 2	78+55.76	0.00	497.73	497.75
3A	78+65.76	0.00	497.96	497.98
3B	78+75.76	0.00	498.20	498.22
3C	78+85.76	0.00	498.43	498.45
3D	78+95.76	0.00	498.67	498.69
3E	79+05.76	0.00	498.90	498.92
3F	79+15.76	0.00	499.14	499.16
3G	79+25.76	0.00	499.37	499.39
3H	79+35.76	0.00	499.61	499.63
3I	79+45.76	0.00	499.84	499.86
3J	79+55.76	0.00	500.08	500.10
3K	79+65.76	0.00	500.31	500.33
3L	79+75.76	0.00	500.55	500.57
3M	79+85.76	0.00	500.78	500.80
3N	79+95.76	0.00	501.02	501.04
3O	80+05.76	0.00	501.25	501.27
3P	80+15.76	0.00	501.49	501.51
3Q	80+25.76	0.00	501.72	501.74
3R	80+35.76	0.00	501.96	501.98
3S	80+45.76	0.00	502.19	502.21
CL Pier 3	80+55.76	0.00	502.43	502.45

Girder No.	DEAD LOAD DEFLECTIONS SPAN 4D				
	D1	D2	D3	D4	D5
1	5/8"	1 1/4"	1 1/8"	35' -7 7/8"	142' -7 1/2"
2	7/8"	1 3/8"	1 3/8"	36' -3"	145' -0 1/8"
3	1"	2 1/8"	1 3/4"	36' -10 1/4"	147' -4 7/8"
4	1 3/8"	2 5/8"	2 1/8"	37' -5 3/8"	149' -9 5/8"

Girder No.	DEAD LOAD DEFLECTIONS SPAN 4				
	D1	D2	D3	D4	D5
5	3/4"	1 3/8"	1 3/8"	34' -2 1/4"	136' -9 1/4"
6	5/8"	1 3/8"	1 1/8"	34' -2 1/4"	136' -9"
7	1/2"	1 1/8"	1"	34' -2 1/4"	136' -9"
8	3/8"	1"	7/8"	34' -2 1/4"	136' -9"

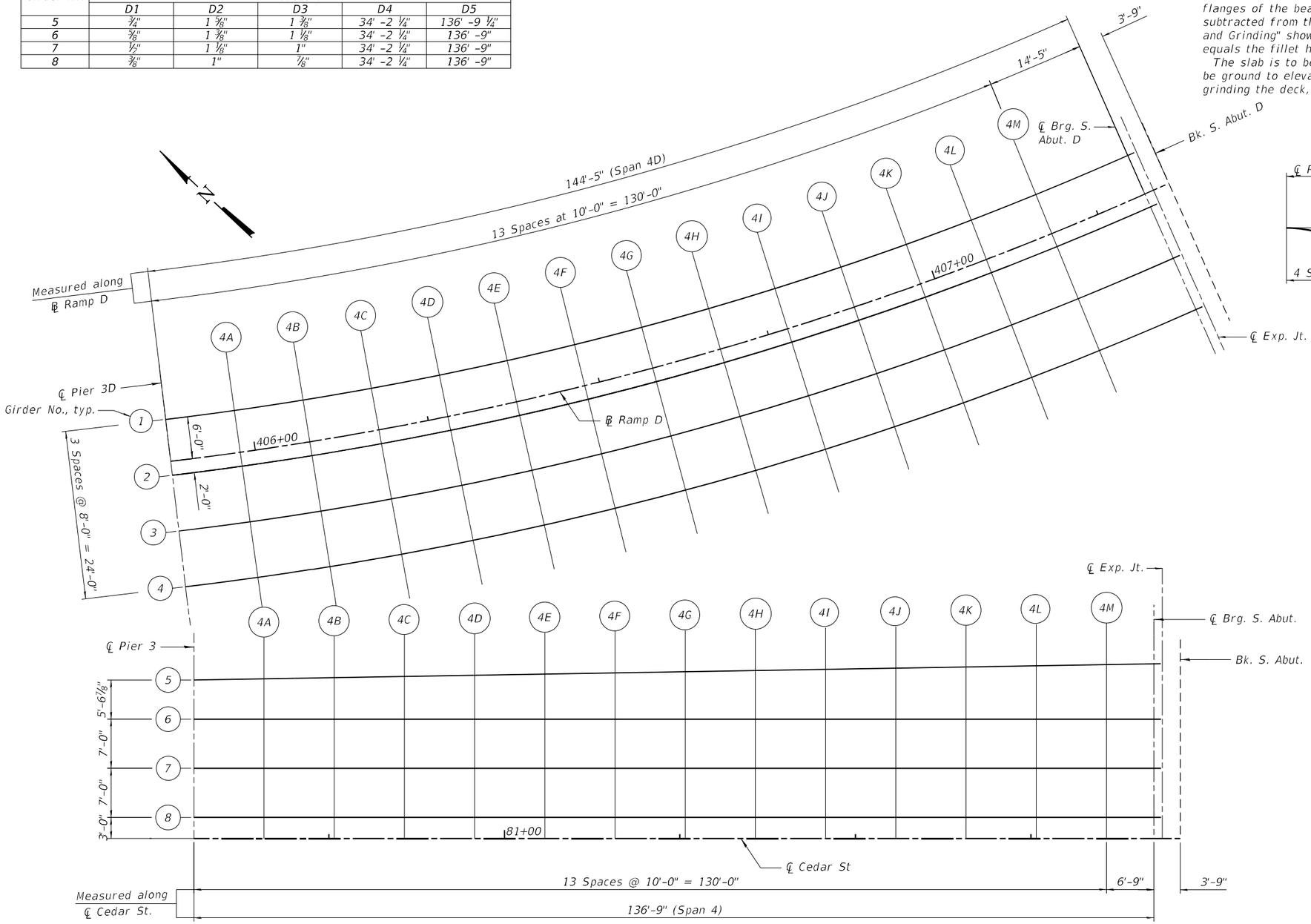

PLAN - SPAN 4 & 4D

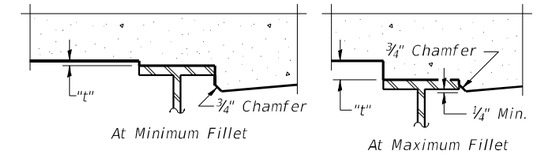

To determine "t": After all structural steel has been erected, elevations of the top flanges of the beams shall be taken at intervals shown below. These elevations subtracted from the "Theoretical Grade Elevations Adjusted for Dead Load Deflection and Grinding" shown on S-28 & S-29, minus the initial slab thickness prior to grinding, equals the fillet heights "t" above top flange of beams.

The slab is to be ground after curing to achieve smoothness, but the slab is not to be ground to elevations below the "Theoretical Grade Elevations" shown below. For grinding the deck, see Special Provisions.

FILLET HEIGHTS

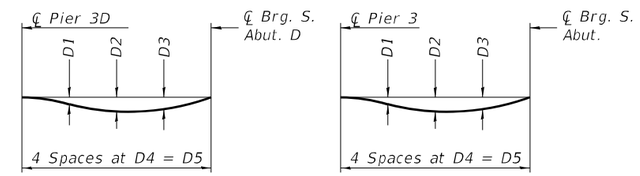

DEAD LOAD DEFLECTION DIAGRAM

(Includes weight of concrete only.)

Note:
The above deflections are not to be used in the field if the engineer is working from the grade elevations adjusted for dead load deflections and grinding as shown on S-28 & S-29.

MODEL: Default
FILE NAME: pw:\\mb-us-pw.bentley.com:mb-us-pw-03\Documents\Chicago IL\01_Projects\179740 IDOT Cedar\SHEX PhII\5.0 CADD\CAD Sheets\0900182-68C55-027-TeS10_LT.dgn

Michael Baker INTERNATIONAL
200 W Adams Street
Suite 1800
Chicago, IL 60606
PH: 312.707.8770
FAX: 312.707.8804

USER NAME = DLamb	DESIGNED - JMK/ADM	REVISED -	
	CHECKED - AMR	REVISED -	
PLOT SCALE = 15:11.9992 ':" / in.	DRAWN - DMJ	REVISED -	
PLOT DATE = 6/6/2023	CHECKED - AMR	REVISED -	

STATE OF ILLINOIS
DEPARTMENT OF TRANSPORTATION

LT UNIT 1 – TOP OF SLAB ELEVATION 10
STRUCTURE NO. 090–0182

SHEET S-27 OF S-194 SHEETS

F.A.P. RTE.	SECTION	COUNTY	TOTAL SHEETS	SHEET NO.
VAR.	13 (HVB, HB-3) BR-1;R	TAZEWELL	1173	553
		CONTRACT NO. 68C55		
	ILLINOIS	FED. AID PROJECT		

GIRDER 1

Location	Station	Offset	Theoretical Grade Elevations	Theoretical Grade Elevations Adjusted for Dead Load Deflection and Grinding
CL Pier 3D	405+87.85	-6.00	499.19	499.21
4A	405+97.85	-6.00	499.09	499.12
4B	406+07.85	-6.00	498.96	499.00
4C	406+17.85	-6.00	498.84	498.89
4D	406+27.85	-6.00	498.69	498.76
4E	406+37.85	-6.00	498.51	498.61
4F	406+47.85	-6.00	498.32	498.43
4G	406+57.85	-6.00	498.10	498.22
4H	406+67.85	-6.00	497.86	497.99
4I	406+77.85	-6.00	497.59	497.72
4J	406+87.85	-6.00	497.31	497.43
4K	406+97.85	-6.00	497.00	497.10
4L	407+07.85	-6.00	496.66	496.75
4M	407+17.85	-6.00	496.31	496.37
CL Brg. S. Abut.	407+32.27	-6.00	495.76	495.78
CL Exp. Jt.	407+33.79	-6.00	495.70	495.72
Bk. S. Abut. D	407+36.02	-6.00	495.61	495.63

℄ RAMP D

Location	Station	Offset	Theoretical Grade Elevations	Theoretical Grade Elevations Adjusted for Dead Load Deflection and Grinding
CL Pier 3D	405+87.85	0.00	499.51	499.53
4A	405+97.85	0.00	499.43	499.46
4B	406+07.85	0.00	499.32	499.37
4C	406+17.85	0.00	499.20	499.27
4D	406+27.85	0.00	499.05	499.14
4E	406+37.85	0.00	498.87	498.99
4F	406+47.85	0.00	498.68	498.81
4G	406+57.85	0.00	498.46	498.61
4H	406+67.85	0.00	498.22	498.37
4I	406+77.85	0.00	497.95	498.11
4J	406+87.85	0.00	497.67	497.81
4K	406+97.85	0.00	497.36	497.48
4L	407+07.85	0.00	497.02	497.13
4M	407+17.85	0.00	496.67	496.74
CL Brg. S. Abut.	407+32.27	0.00	496.12	496.14
CL Exp. Jt.	407+33.79	0.00	496.06	496.08
Bk. S. Abut. D	407+36.02	0.00	495.97	495.99

GIRDER 2

Location	Station	Offset	Theoretical Grade Elevations	Theoretical Grade Elevations Adjusted for Dead Load Deflection and Grinding
CL Pier 3D	405+87.85	2.00	499.62	499.64
4A	405+97.85	2.00	499.54	499.57
4B	406+07.85	2.00	499.44	499.49
4C	406+17.85	2.00	499.32	499.39
4D	406+27.85	2.00	499.17	499.26
4E	406+37.85	2.00	498.99	499.12
4F	406+47.85	2.00	498.80	498.94
4G	406+57.85	2.00	498.58	498.74
4H	406+67.85	2.00	498.34	498.50
4I	406+77.85	2.00	498.07	498.24
4J	406+87.85	2.00	497.79	497.94
4K	406+97.85	2.00	497.48	497.61
4L	407+07.85	2.00	497.14	497.25
4M	407+17.85	2.00	496.79	496.86
CL Brg. S. Abut.	407+32.27	2.00	496.24	496.26
CL Exp. Jt.	407+33.79	2.00	496.18	496.20
Bk. S. Abut. D	407+36.02	2.00	496.09	496.11

GIRDER 3

Location	Station	Offset	Theoretical Grade Elevations	Theoretical Grade Elevations Adjusted for Dead Load Deflection and Grinding
CL Pier 3D	405+87.85	10.00	500.04	500.06
4A	405+97.85	10.00	500.00	500.03
4B	406+07.85	10.00	499.92	499.98
4C	406+17.85	10.00	499.80	499.88
4D	406+27.85	10.00	499.65	499.77
4E	406+37.85	10.00	499.47	499.62
4F	406+47.85	10.00	499.28	499.45
4G	406+57.85	10.00	499.06	499.25
4H	406+67.85	10.00	498.82	499.02
4I	406+77.85	10.00	498.55	498.75
4J	406+87.85	10.00	498.27	498.45
4K	406+97.85	10.00	497.96	498.12
4L	407+07.85	10.00	497.62	497.75
4M	407+17.85	10.00	497.27	497.36
CL Brg. S. Abut.	407+32.27	10.00	496.72	496.74
CL Exp. Jt.	407+33.79	10.00	496.66	496.68
Bk. S. Abut. D	407+36.02	10.00	496.57	496.59

GIRDER 4

Location	Station	Offset	Theoretical Grade Elevations	Theoretical Grade Elevations Adjusted for Dead Load Deflection and Grinding
CL Pier 3D	405+87.85	18.00	500.47	500.49
4A	405+97.85	18.00	500.45	500.49
4B	406+07.85	18.00	500.40	500.47
4C	406+17.85	18.00	500.28	500.38
4D	406+27.85	18.00	500.13	500.27
4E	406+37.85	18.00	499.95	500.13
4F	406+47.85	18.00	499.76	499.97
4G	406+57.85	18.00	499.54	499.77
4H	406+67.85	18.00	499.30	499.54
4I	406+77.85	18.00	499.03	499.27
4J	406+87.85	18.00	498.75	498.97
4K	406+97.85	18.00	498.44	498.63
4L	407+07.85	18.00	498.10	498.25
4M	407+17.85	18.00	497.75	497.85
CL Brg. S. Abut.	407+32.27	18.00	497.20	497.22
CL Exp. Jt.	407+33.79	18.00	497.14	497.16
Bk. S. Abut. D	407+36.02	18.00	497.05	497.07

GIRDER 5

Location	Station	Offset	Theoretical Grade Elevations	Theoretical Grade Elevations Adjusted for Dead Load Deflection and Grinding
CL Pier 3	80+55.76	-22.58	501.98	502.00
4A	80+65.76	-22.75	502.21	502.24
4B	80+75.76	-22.91	502.44	502.49
4C	80+85.76	-23.08	502.67	502.75
4D	80+95.76	-23.25	502.92	503.02
4E	81+05.76	-23.42	503.23	503.36
4F	81+15.76	-23.59	503.55	503.69
4G	81+25.76	-23.76	503.86	504.02
4H	81+35.76	-23.92	504.18	504.34
4I	81+45.76	-24.09	504.50	504.65
4J	81+55.76	-24.26	504.82	504.96
4K	81+65.76	-24.43	505.14	505.25
4L	81+75.76	-24.60	505.46	505.54
4M	81+85.76	-24.76	505.78	505.83
CL Brg. S. Abut.	81+92.51	-24.88	506.00	506.02
CL Exp. Jt.	81+94.03	-24.90	506.05	506.07
Bk. S. Abut.	81+96.26	-24.94	506.12	506.14

GIRDER 6

Location	Station	Offset	Theoretical Grade Elevations	Theoretical Grade Elevations Adjusted for Dead Load Deflection and Grinding
CL Pier 3	80+55.76	-17.00	502.09	502.11
4A	80+65.76	-17.00	502.32	502.35
4B	80+75.76	-17.00	502.56	502.60
4C	80+85.76	-17.00	502.79	502.86
4D	80+95.76	-17.00	503.04	503.13
4E	81+05.76	-17.00	503.34	503.45
4F	81+15.76	-17.00	503.63	503.76
4G	81+25.76	-17.00	503.92	504.06
4H	81+35.76	-17.00	504.22	504.36
4I	81+45.76	-17.00	504.51	504.65
4J	81+55.76	-17.00	504.80	504.93
4K	81+65.76	-17.00	505.10	505.20
4L	81+75.76	-17.00	505.39	505.47
4M	81+85.76	-17.00	505.69	505.73
CL Brg. S. Abut.	81+92.51	-17.00	505.88	505.91
CL Exp. Jt.	81+94.03	-17.00	505.93	505.95
Bk. S. Abut.	81+96.26	-17.00	505.99	506.02

GIRDER 7

Location	Station	Offset	Theoretical Grade Elevations	Theoretical Grade Elevations Adjusted for Dead Load Deflection and Grinding
CL Pier 3	80+55.76	-10.00	502.23	502.25
4A	80+65.76	-10.00	502.46	502.49
4B	80+75.76	-10.00	502.70	502.74
4C	80+85.76	-10.00	502.93	502.99
4D	80+95.76	-10.00	503.18	503.25
4E	81+05.76	-10.00	503.45	503.54
4F	81+15.76	-10.00	503.72	503.83
4G	81+25.76	-10.00	503.98	504.11
4H	81+35.76	-10.00	504.25	504.38
4I	81+45.76	-10.00	504.52	504.64
4J	81+55.76	-10.00	504.79	504.90
4K	81+65.76	-10.00	505.06	505.15
4L	81+75.76	-10.00	505.33	505.40
4M	81+85.76	-10.00	505.60	505.64
CL Brg. S. Abut.	81+92.51	-10.00	505.78	505.81
CL Exp. Jt.	81+94.03	-10.00	505.83	505.85
Bk. S. Abut.	81+96.26	-10.00	505.89	505.91

GIRDER 8

Location	Station	Offset	Theoretical Grade Elevations	Theoretical Grade Elevations Adjusted for Dead Load Deflection and Grinding
CL Pier 3	80+55.76	-3.00	502.37	502.39
4A	80+65.76	-3.00	502.60	502.63
4B	80+75.76	-3.00	502.84	502.87
4C	80+85.76	-3.00	503.07	503.12
4D	80+95.76	-3.00	503.31	503.38
4E	81+05.76	-3.00	503.56	503.64
4F	81+15.76	-3.00	503.80	503.90
4G	81+25.76	-3.00	504.05	504.15
4H	81+35.76	-3.00	504.29	504.40
4I	81+45.76	-3.00	504.54	504.64
4J	81+55.76	-3.00	504.78	504.88
4K	81+65.76	-3.00	505.03	505.11
4L	81+75.76	-3.00	505.27	505.33
4M	81+85.76	-3.00	505.52	505.56
CL Brg. S. Abut.	81+92.51	-3.00	505.69	505.71
CL Exp. Jt.	81+94.03	-3.00	505.72	505.74
Bk. S. Abut.	81+96.26	-3.00	505.78	505.80

℄ CEDAR ST

Location	Station	Offset	Theoretical Grade Elevations	Theoretical Grade Elevations Adjusted for Dead Load Deflection and Grinding
CL Pier 3	80+55.76	0.00	502.43	502.45
4A	80+65.76	0.00	502.66	502.68
4B	80+75.76	0.00	502.90	502.92
4C	80+85.76	0.00	503.13	503.15
4D	80+95.76	0.00	503.37	503.39
4E	81+05.76	0.00	503.60	503.62
4F	81+15.76	0.00	503.84	503.86
4G	81+25.76	0.00	504.07	504.09
4H	81+35.76	0.00	504.31	504.33
4I	81+45.76	0.00	504.54	504.56
4J	81+55.76	0.00	504.78	504.80
4K	81+65.76	0.00	505.01	505.03
4L	81+75.76	0.00	505.25	505.27
4M	81+85.76	0.00	505.48	505.50
CL Brg. S. Abut.	81+92.51	0.00	505.64	505.66
CL Exp. Jt.	81+94.03	0.00	505.68	505.70
Bk. S. Abut.	81+96.26	0.00	505.73	505.75

Girder No.	DEAD LOAD DEFLECTIONS SPAN 1				
	A1	A2	A3	A4	A5
9	1 1/4"	1 1/8"	1/4"	40' -7"	162' -4"
10	1 1/4"	1 1/8"	1/4"	40' -7"	162' -4"
11	1 1/4"	1 1/8"	1/4"	40' -7"	162' -4"
12	- 1/4"	- 3/8"	- 3/8"	16' -7 1/2"	66' -6"
13	- 1/8"	- 1/8"	- 1/8"	10' -8 1/4"	42' -9 1/8"
14	1 1/4"	1 1/4"	1/8"	40' -7 5/8"	162' -6 3/8"
15	1 1/4"	1 1/4"	1/4"	40' -7 5/8"	162' -6 3/8"
16	1 3/8"	1 3/8"	3/8"	40' -7 5/8"	162' -6 3/8"

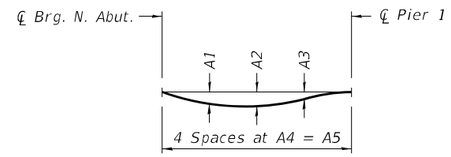

DEAD LOAD DEFLECTION DIAGRAM

(Includes weight of concrete only.)

Note:
The above deflections are not to be used in the field if the engineer is working from the grade elevations adjusted for dead load deflections and grinding as shown on S-31 & S-32.

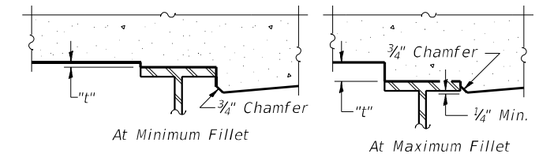

To determine "t": After all structural steel has been erected, elevations of the top flanges of the beams shall be taken at intervals shown below. These elevations subtracted from the "Theoretical Grade Elevations Adjusted for Dead Load Deflection and Grinding" shown on S-31 & S-32, minus the initial slab thickness prior to grinding, equals the fillet heights "t" above top flange of beams.

The slab is to be ground after curing to achieve smoothness, but the slab is not to be ground to elevations below the "Theoretical Grade Elevations" shown below. For grinding the deck, see Special Provisions.

FILLET HEIGHTS

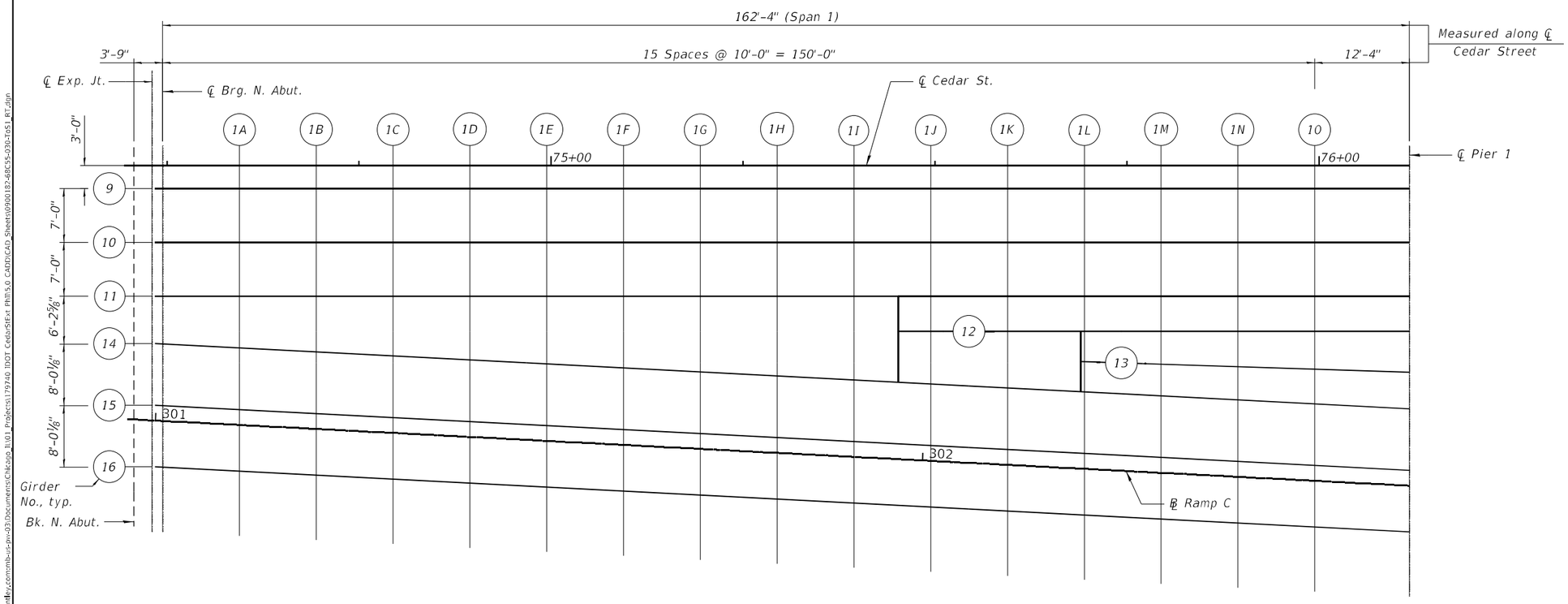

PLAN - SPAN 1

MODEL: Default
FILE NAME: pw:\\ms-us-cs.bentley.com:mbi-us-pw-03\Documents\Chicago IL\01 Projects\179740 IDOT Cedar\SIE+ Phlt5.0 CADD\CAD Sheets\0900182-68C55-030-ToS1 RT.dgn

Michael Baker INTERNATIONAL
200 W Adams Street
Suite 1800
Chicago, IL 60606
P:+ 312.707.8770
FAX: 312.707.8804

USER NAME = DLamb	DESIGNED - JMK/ADM	REVISED -
	CHECKED - AMR	REVISED -
PLOT SCALE = 15:11.9992 ':" / in.	DRAWN - DMJ	REVISED -
PLOT DATE = 6/6/2023	CHECKED - AMR	REVISED -

STATE OF ILLINOIS
DEPARTMENT OF TRANSPORTATION

RT UNIT 1 – TOP OF SLAB ELEVATION 1
STRUCTURE NO. 090–0182

SHEET S-30 OF S-194 SHEETS

F.A.P. RTE.	SECTION	COUNTY	TOTAL SHEETS	SHEET NO.
VAR.	13 (HVB, HB-3) BR-1:R	TAZEWELL	1173	556
		CONTRACT NO. 68C55		
	ILLINOIS	FED. AID PROJECT		

℄ CEDAR ST

Location	Station	Offset	Theoretical Grade Elevations	Theoretical Grade Elevations Adjusted for Dead Load Deflection and Grinding
Bk. N. Abut.	74+45.68	0.00	488.01	488.03
CL Exp. Jt.	74+47.91	0.00	488.07	488.09
CL Brg. N. Abut.	74+49.43	0.00	488.11	488.13
1A	74+59.43	0.00	488.37	488.40
1B	74+69.43	0.00	488.63	488.65
1C	74+79.43	0.00	488.88	488.90
1D	74+89.43	0.00	489.12	489.14
1E	74+99.43	0.00	489.35	489.38
1F	75+09.43	0.00	489.59	489.61
1G	75+19.43	0.00	489.82	489.85
1H	75+29.43	0.00	490.06	490.08
1I	75+39.43	0.00	490.29	490.32
1J	75+49.43	0.00	490.53	490.55
1K	75+59.43	0.00	490.76	490.79
1L	75+69.43	0.00	491.00	491.02
1M	75+79.43	0.00	491.23	491.26
1N	75+89.43	0.00	491.47	491.49
1O	75+99.43	0.00	491.70	491.73
CL Pier 1	76+11.76	0.00	491.99	492.02

GIRDER 9

Location	Station	Offset	Theoretical Grade Elevations	Theoretical Grade Elevations Adjusted for Dead Load Deflection and Grinding
Bk. N. Abut.	74+45.68	3.00	487.95	487.97
CL Exp. Jt.	74+47.91	3.00	488.01	488.03
CL Brg. N. Abut.	74+49.43	3.00	488.05	488.07
1A	74+59.43	3.00	488.31	488.37
1B	74+69.43	3.00	488.57	488.65
1C	74+79.43	3.00	488.82	488.92
1D	74+89.43	3.00	489.06	489.18
1E	74+99.43	3.00	489.29	489.43
1F	75+09.43	3.00	489.53	489.67
1G	75+19.43	3.00	489.76	489.90
1H	75+29.43	3.00	490.00	490.12
1I	75+39.43	3.00	490.23	490.34
1J	75+49.43	3.00	490.47	490.55
1K	75+59.43	3.00	490.70	490.77
1L	75+69.43	3.00	490.94	490.98
1M	75+79.43	3.00	491.17	491.20
1N	75+89.43	3.00	491.41	491.43
1O	75+99.43	3.00	491.64	491.66
CL Pier 1	76+11.76	3.00	491.93	491.96

GIRDER 10

Location	Station	Offset	Theoretical Grade Elevations	Theoretical Grade Elevations Adjusted for Dead Load Deflection and Grinding
Bk. N. Abut.	74+45.68	10.00	487.81	487.83
CL Exp. Jt.	74+47.91	10.00	487.87	487.89
CL Brg. N. Abut.	74+49.43	10.00	487.91	487.93
1A	74+59.43	10.00	488.17	488.23
1B	74+69.43	10.00	488.43	488.51
1C	74+79.43	10.00	488.68	488.78
1D	74+89.43	10.00	488.92	489.04
1E	74+99.43	10.00	489.15	489.29
1F	75+09.43	10.00	489.39	489.53
1G	75+19.43	10.00	489.62	489.76
1H	75+29.43	10.00	489.86	489.98
1I	75+39.43	10.00	490.09	490.20
1J	75+49.43	10.00	490.33	490.41
1K	75+59.43	10.00	490.56	490.62
1L	75+69.43	10.00	490.80	490.84
1M	75+79.43	10.00	491.03	491.06
1N	75+89.43	10.00	491.27	491.29
1O	75+99.43	10.00	491.50	491.52
CL Pier 1	76+11.76	10.00	491.79	491.82

GIRDER 11

Location	Station	Offset	Theoretical Grade Elevations	Theoretical Grade Elevations Adjusted for Dead Load Deflection and Grinding
Bk. N. Abut.	74+45.68	17.00	487.67	487.69
CL Exp. Jt.	74+47.91	17.00	487.73	487.75
CL Brg. N. Abut.	74+49.43	17.00	487.77	487.79
1A	74+59.43	17.00	488.03	488.09
1B	74+69.43	17.00	488.29	488.37
1C	74+79.43	17.00	488.54	488.64
1D	74+89.43	17.00	488.78	488.90
1E	74+99.43	17.00	489.01	489.15
1F	75+09.43	17.00	489.25	489.39
1G	75+19.43	17.00	489.48	489.62
1H	75+29.43	17.00	489.72	489.84
1I	75+39.43	17.00	489.95	490.06
1J	75+49.43	17.00	490.19	490.27
1K	75+59.43	17.00	490.42	490.48
1L	75+69.43	17.00	490.66	490.70
1M	75+79.43	17.00	490.89	490.92
1N	75+89.43	17.00	491.13	491.15
1O	75+99.43	17.00	491.36	491.38
CL Pier 1	76+11.76	17.00	491.65	491.68

GIRDER 12

Location	Station	Offset	Theoretical Grade Elevations	Theoretical Grade Elevations Adjusted for Dead Load Deflection and Grinding
Start of Girder	75+45.26	21.58	490.00	490.02
1J	75+49.43	21.58	490.10	490.11
1K	75+59.43	21.58	490.33	490.33
1L	75+69.43	21.58	490.57	490.56
1M	75+79.43	21.58	490.80	490.79
1N	75+89.43	21.58	491.04	491.03
1O	75+99.43	21.58	491.27	491.27
CL Pier 1	76+11.76	21.58	491.56	491.58

GIRDER 13

Location	Station	Offset	Theoretical Grade Elevations	Theoretical Grade Elevations Adjusted for Dead Load Deflection and Grinding
Start of Girder	75+69.01	26.12	490.47	490.49
1L	75+69.43	25.52	490.49	490.51
1M	75+79.43	25.85	490.72	490.73
1N	75+89.43	26.17	490.95	490.95
1O	75+99.43	26.50	491.17	491.18
CL Pier 1	76+11.76	26.91	491.46	491.48

GIRDER 14

Location	Station	Offset	Theoretical Grade Elevations	Theoretical Grade Elevations Adjusted for Dead Load Deflection and Grinding
Bk. N. Abut.	74+45.68	23.02	487.55	487.57
CL Exp. Jt.	74+47.91	23.14	487.61	487.63
CL Brg. N. Abut.	74+49.43	23.22	487.65	487.67
1A	74+59.43	23.74	487.90	487.95
1B	74+69.43	24.26	488.15	488.23
1C	74+79.43	24.78	488.38	488.49
1D	74+89.43	25.30	488.61	488.74
1E	74+99.43	25.82	488.84	488.97
1F	75+09.43	26.33	489.06	489.20
1G	75+19.43	26.85	489.29	489.42
1H	75+29.43	27.37	489.51	489.63
1I	75+39.43	27.89	489.74	489.84
1J	75+49.43	28.41	489.96	490.04
1K	75+59.43	28.93	490.19	490.24
1L	75+69.43	29.45	490.41	490.45
1M	75+79.43	29.97	490.64	490.66
1N	75+89.43	30.49	490.86	490.87
1O	75+99.43	31.01	491.08	491.10
CL Pier 1	76+11.76	31.65	491.36	491.38

GIRDER 15

Location	Station	Offset	Theoretical Grade Elevations	Theoretical Grade Elevations Adjusted for Dead Load Deflection and Grinding
Bk. N. Abut.	74+45.68	31.03	487.39	487.41
CL Exp. Jt.	74+47.91	31.15	487.45	487.47
CL Brg. N. Abut.	74+49.43	31.23	487.49	487.51
1A	74+59.43	31.75	487.74	487.79
1B	74+69.43	32.27	487.98	488.07
1C	74+79.43	32.79	488.22	488.33
1D	74+89.43	33.31	488.45	488.58
1E	74+99.43	33.83	488.68	488.82
1F	75+09.43	34.34	488.90	489.04
1G	75+19.43	34.86	489.13	489.26
1H	75+29.43	35.38	489.35	489.48
1I	75+39.43	35.90	489.58	489.69
1J	75+49.43	36.42	489.80	489.89
1K	75+59.43	36.94	490.03	490.09
1L	75+69.43	37.46	490.25	490.29
1M	75+79.43	37.98	490.48	490.50
1N	75+89.43	38.50	490.70	490.72
1O	75+99.43	39.02	490.92	490.94
CL Pier 1	76+11.76	39.66	491.20	491.22

GIRDER 16

Location	Station	Offset	Theoretical Grade Elevations	Theoretical Grade Elevations Adjusted for Dead Load Deflection and Grinding
Bk. N. Abut.	74+45.68	39.04	487.23	487.25
CL Exp. Jt.	74+47.91	39.16	487.29	487.31
CL Brg. N. Abut.	74+49.43	39.24	487.33	487.35
1A	74+59.43	39.76	487.58	487.63
1B	74+69.43	40.28	487.82	487.91
1C	74+79.43	40.80	488.06	488.17
1D	74+89.43	41.32	488.29	488.42
1E	74+99.43	41.84	488.52	488.66
1F	75+09.43	42.35	488.74	488.89
1G	75+19.43	42.87	488.97	489.11
1H	75+29.43	43.39	489.19	489.33
1I	75+39.43	43.91	489.42	489.53
1J	75+49.43	44.43	489.64	489.74
1K	75+59.43	44.95	489.87	489.94
1L	75+69.43	45.47	490.09	490.14
1M	75+79.43	45.99	490.32	490.35
1N	75+89.43	46.51	490.54	490.56
1O	75+99.43	47.03	490.76	490.78
CL Pier 1	76+11.76	47.67	491.04	491.06

Girder No.	DEAD LOAD DEFLECTIONS SPAN 2				
	B1	B2	B3	B4	B5
9	2 3/8"	4"	2 1/4"	61' -0"	244' -0"
10	2 3/8"	4"	2 1/8"	61' -0"	244' -0"
11	2 3/8"	3 7/8"	2 1/8"	61' -0"	244' -0"
12	2 1/2"	4"	2"	61' -0"	244' -0"
13	2 1/2"	3 7/8"	1 7/8"	61' -3 1/2"	245' -1 3/4"
14	2 1/2"	4"	2"	61' -2 1/2"	244' -10 1/8"
15	2 5/8"	4 1/8"	2 1/8"	61' -1 1/4"	244' -5 1/4"
16	2 5/8"	4 1/4"	2 1/4"	61' -0"	244' -0 1/4"

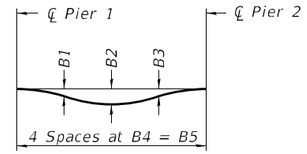

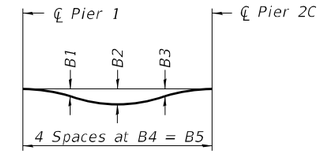

DEAD LOAD DEFLECTION DIAGRAM

(Includes weight of concrete only.)

Note:
The above deflections are not to be used in the field if the engineer is working from the grade elevations adjusted for dead load deflections and grinding as shown on S-34 & S-35.

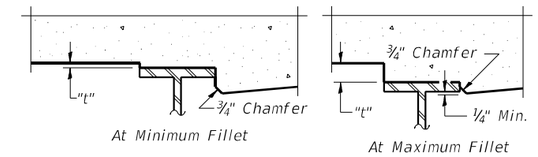

To determine "t": After all structural steel has been erected, elevations of the top flanges of the beams shall be taken at intervals shown below. These elevations subtracted from the "Theoretical Grade Elevations Adjusted for Dead Load Deflection and Grinding" shown on S-34 & S-35, minus the initial slab thickness prior to grinding, equals the fillet heights "t" above top flange of beams.
The slab is to be ground after curing to achieve smoothness, but the slab is not to be ground to elevations below the "Theoretical Grade Elevations" shown below. For grinding the deck, see Special Provisions.

FILLET HEIGHTS

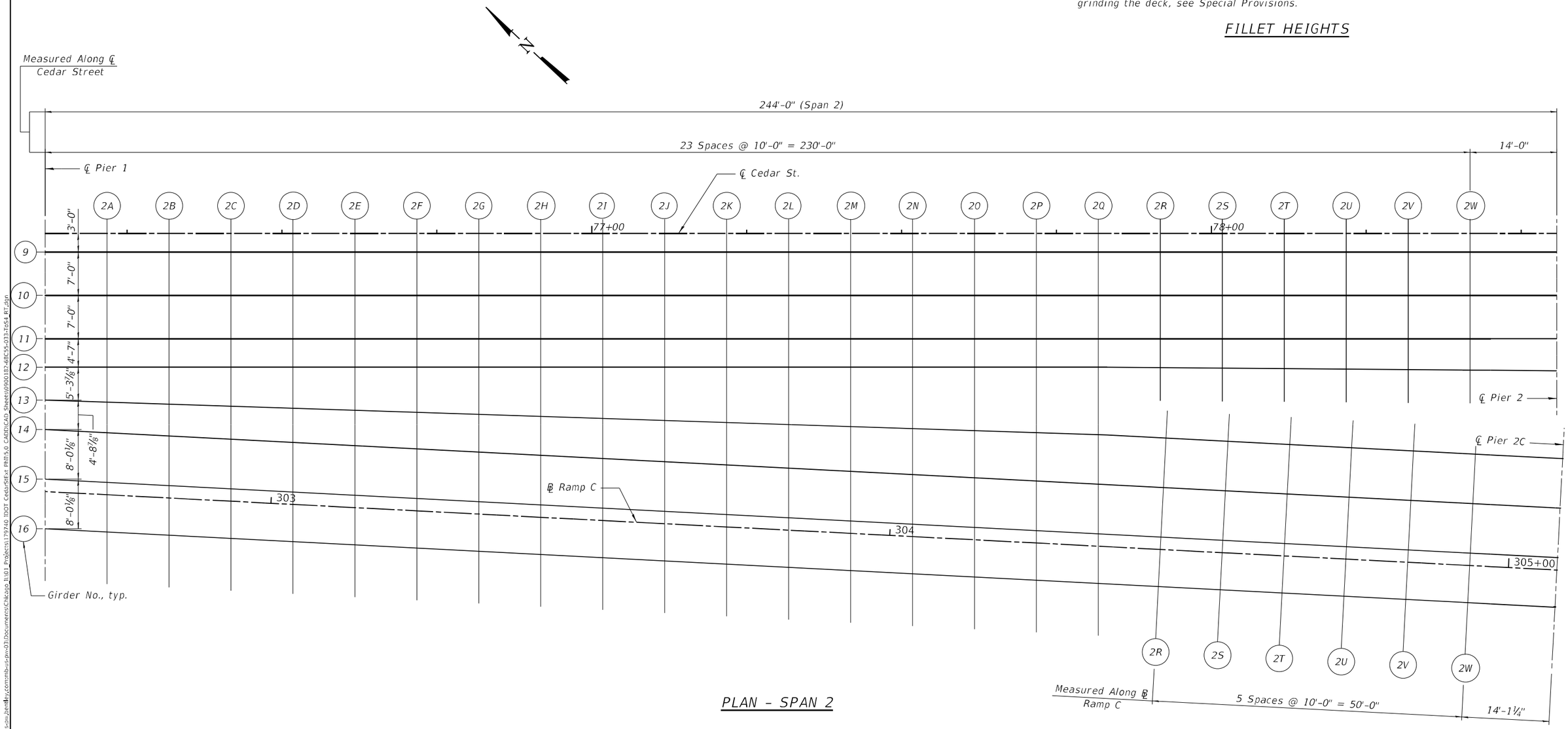

PLAN - SPAN 2

℄ CEDAR ST

Location	Station	Offset	Theoretical Grade Elevations	Theoretical Grade Elevations Adjusted for Dead Load Deflection and Grinding
CL Pier 1	76+11.76	0.00	491.99	492.02
2A	76+21.76	0.00	492.23	492.25
2B	76+31.76	0.00	492.46	492.49
2C	76+41.76	0.00	492.70	492.72
2D	76+51.76	0.00	492.93	492.96
2E	76+61.76	0.00	493.17	493.19
2F	76+71.76	0.00	493.40	493.43
2G	76+81.76	0.00	493.64	493.66
2H	76+91.76	0.00	493.87	493.90
2I	77+01.76	0.00	494.11	494.13
2J	77+11.76	0.00	494.34	494.37
2K	77+21.76	0.00	494.58	494.60
2L	77+31.76	0.00	494.81	494.84
2M	77+41.76	0.00	495.05	495.07
2N	77+51.76	0.00	495.28	495.31
2O	77+61.76	0.00	495.52	495.54
2P	77+71.76	0.00	495.75	495.78
2Q	77+81.76	0.00	495.99	496.01
2R	77+91.76	0.00	496.22	496.25
2S	78+01.76	0.00	496.46	496.48
2T	78+11.76	0.00	496.69	496.72
2U	78+21.76	0.00	496.93	496.95
2V	78+31.76	0.00	497.16	497.19
2W	78+41.76	0.00	497.40	497.42
CL Pier 2	78+55.76	0.00	497.73	497.75

GIRDER 9

Location	Station	Offset	Theoretical Grade Elevations	Theoretical Grade Elevations Adjusted for Dead Load Deflection and Grinding
CL Pier 1	76+11.76	3.00	491.93	491.96
2A	76+21.76	3.00	492.17	492.21
2B	76+31.76	3.00	492.40	492.47
2C	76+41.76	3.00	492.64	492.74
2D	76+51.76	3.00	492.87	493.01
2E	76+61.76	3.00	493.11	493.29
2F	76+71.76	3.00	493.34	493.56
2G	76+81.76	3.00	493.58	493.84
2H	76+91.76	3.00	493.81	494.10
2I	77+01.76	3.00	494.05	494.37
2J	77+11.76	3.00	494.28	494.62
2K	77+21.76	3.00	494.52	494.87
2L	77+31.76	3.00	494.75	495.11
2M	77+41.76	3.00	494.99	495.34
2N	77+51.76	3.00	495.22	495.56
2O	77+61.76	3.00	495.46	495.77
2P	77+71.76	3.00	495.69	495.98
2Q	77+81.76	3.00	495.93	496.18
2R	77+91.76	3.00	496.16	496.38
2S	78+01.76	3.00	496.40	496.58
2T	78+11.76	3.00	496.63	496.78
2U	78+21.76	3.00	496.87	496.98
2V	78+31.76	3.00	497.10	497.18
2W	78+41.76	3.00	497.34	497.39
CL Pier 2	78+55.76	3.00	497.67	497.69

GIRDER 10

Location	Station	Offset	Theoretical Grade Elevations	Theoretical Grade Elevations Adjusted for Dead Load Deflection and Grinding
CL Pier 1	76+11.76	10.00	491.79	491.82
2A	76+21.76	10.00	492.03	492.07
2B	76+31.76	10.00	492.26	492.33
2C	76+41.76	10.00	492.50	492.60
2D	76+51.76	10.00	492.73	492.87
2E	76+61.76	10.00	492.97	493.15
2F	76+71.76	10.00	493.20	493.42
2G	76+81.76	10.00	493.44	493.69
2H	76+91.76	10.00	493.67	493.96
2I	77+01.76	10.00	493.91	494.22
2J	77+11.76	10.00	494.14	494.48
2K	77+21.76	10.00	494.38	494.73
2L	77+31.76	10.00	494.61	494.96
2M	77+41.76	10.00	494.85	495.19
2N	77+51.76	10.00	495.08	495.42
2O	77+61.76	10.00	495.32	495.63
2P	77+71.76	10.00	495.55	495.84
2Q	77+81.76	10.00	495.79	496.04
2R	77+91.76	10.00	496.02	496.24
2S	78+01.76	10.00	496.26	496.43
2T	78+11.76	10.00	496.49	496.63
2U	78+21.76	10.00	496.73	496.83
2V	78+31.76	10.00	496.96	497.03
2W	78+41.76	10.00	497.20	497.24
CL Pier 2	78+55.76	10.00	497.53	497.55

GIRDER 11

Location	Station	Offset	Theoretical Grade Elevations	Theoretical Grade Elevations Adjusted for Dead Load Deflection and Grinding
CL Pier 1	76+11.76	17.00	491.65	491.68
2A	76+21.76	17.00	491.89	491.93
2B	76+31.76	17.00	492.12	492.19
2C	76+41.76	17.00	492.36	492.46
2D	76+51.76	17.00	492.59	492.73
2E	76+61.76	17.00	492.83	493.01
2F	76+71.76	17.00	493.06	493.28
2G	76+81.76	17.00	493.30	493.55
2H	76+91.76	17.00	493.53	493.82
2I	77+01.76	17.00	493.77	494.08
2J	77+11.76	17.00	494.00	494.34
2K	77+21.76	17.00	494.24	494.58
2L	77+31.76	17.00	494.47	494.82
2M	77+41.76	17.00	494.71	495.05
2N	77+51.76	17.00	494.94	495.27
2O	77+61.76	17.00	495.18	495.49
2P	77+71.76	17.00	495.41	495.69
2Q	77+81.76	17.00	495.65	495.89
2R	77+91.76	17.00	495.88	496.09
2S	78+01.76	17.00	496.12	496.29
2T	78+11.76	17.00	496.35	496.49
2U	78+21.76	17.00	496.59	496.69
2V	78+31.76	17.00	496.82	496.89
2W	78+41.76	17.00	497.06	497.10
CL Pier 2	78+55.76	17.00	497.39	497.41

GIRDER 12

Location	Station	Offset	Theoretical Grade Elevations	Theoretical Grade Elevations Adjusted for Dead Load Deflection and Grinding
CL Pier 1	76+11.76	21.58	491.56	491.58
2A	76+21.76	21.58	491.80	491.84
2B	76+31.76	21.58	492.03	492.10
2C	76+41.76	21.58	492.27	492.37
2D	76+51.76	21.58	492.50	492.65
2E	76+61.76	21.58	492.74	492.92
2F	76+71.76	21.58	492.97	493.20
2G	76+81.76	21.58	493.21	493.47
2H	76+91.76	21.58	493.44	493.74
2I	77+01.76	21.58	493.68	494.00
2J	77+11.76	21.58	493.91	494.25
2K	77+21.76	21.58	494.15	494.50
2L	77+31.76	21.58	494.38	494.73
2M	77+41.76	21.58	494.62	494.96
2N	77+51.76	21.58	494.85	495.18
2O	77+61.76	21.58	495.09	495.39
2P	77+71.76	21.58	495.32	495.60
2Q	77+81.76	21.58	495.56	495.80
2R	77+91.76	21.65	495.79	495.99
2S	78+01.76	21.73	496.02	496.19
2T	78+11.76	21.82	496.26	496.39
2U	78+21.76	21.90	496.49	496.59
2V	78+31.76	21.98	496.73	496.79
2W	78+41.76	22.06	496.96	497.00
CL Pier 2	78+55.76	22.17	497.29	497.31

GIRDER 13

Location	Station	Offset	Theoretical Grade Elevations	Theoretical Grade Elevations Adjusted for Dead Load Deflection and Grinding
CL Pier 1	76+11.76	26.91	491.46	491.48
2A	76+21.76	27.24	491.68	491.73
2B	76+31.76	27.56	491.91	491.98
2C	76+41.76	27.89	492.14	492.24
2D	76+51.76	28.22	492.37	492.51
2E	76+61.76	28.55	492.60	492.78
2F	76+71.76	28.88	492.83	493.05
2G	76+81.76	29.20	493.06	493.32
2H	76+91.76	29.53	493.28	493.58
2I	77+01.76	29.86	493.51	493.83
2J	77+11.76	30.19	493.74	494.08
2K	77+21.76	30.52	493.97	494.32
2L	77+31.76	30.85	494.20	494.55
2M	77+41.76	31.17	494.43	494.77
2N	77+51.76	31.50	494.65	494.98
2O	77+61.76	31.83	494.88	495.18
2P	77+71.76	32.16	495.11	495.38
2Q	77+81.76	32.49	495.34	495.57
2R	304+43.72	-18.00	495.57	495.76
2S	304+53.72	-18.00	495.79	495.94
2T	304+63.72	-18.00	496.02	496.13
2U	304+73.72	-18.00	496.24	496.32
2V	304+83.72	-18.00	496.46	496.51
2W	304+93.72	-18.00	496.69	496.72
CL Pier 2C	305+07.82	-18.00	497.00	497.03

GIRDER 14

Location	Station	Offset	Theoretical Grade Elevations	Theoretical Grade Elevations Adjusted for Dead Load Deflection and Grinding
CL Pier 1	76+11.76	31.65	491.36	491.38
2A	76+21.76	32.17	491.59	491.63
2B	76+31.76	32.68	491.81	491.88
2C	76+41.76	33.20	492.04	492.14
2D	76+51.76	33.72	492.26	492.40
2E	76+61.76	34.24	492.48	492.67
2F	76+71.76	34.76	492.71	492.94
2G	76+81.76	35.28	492.93	493.20
2H	76+91.76	35.80	493.16	493.46
2I	77+01.76	36.32	493.38	493.71
2J	77+11.76	36.84	493.61	493.95
2K	77+21.76	37.36	493.83	494.19
2L	77+31.76	37.88	494.06	494.41
2M	77+41.76	38.40	494.28	494.63
2N	77+51.76	38.91	494.51	494.84
2O	77+61.76	39.43	494.73	495.04
2P	77+71.76	39.95	494.96	495.23
2Q	77+81.76	40.47	495.18	495.42
2R	304+43.72	-10.00	495.41	495.61
2S	304+53.72	-10.00	495.63	495.79
2T	304+63.72	-10.00	495.86	495.98
2U	304+73.72	-10.00	496.08	496.17
2V	304+83.72	-10.00	496.30	496.36
2W	304+93.72	-10.00	496.53	496.56
CL Pier 2C	305+07.82	-10.00	496.84	496.87

GIRDER 15

Location	Station	Offset	Theoretical Grade Elevations	Theoretical Grade Elevations Adjusted for Dead Load Deflection and Grinding
CL Pier 1	76+11.76	39.66	491.20	491.22
2A	76+21.76	40.18	491.43	491.47
2B	76+31.76	40.69	491.65	491.72
2C	76+41.76	41.21	491.88	491.98
2D	76+51.76	41.73	492.10	492.25
2E	76+61.76	42.25	492.32	492.52
2F	76+71.76	42.77	492.55	492.78
2G	76+81.76	43.29	492.77	493.05
2H	76+91.76	43.81	493.00	493.31
2I	77+01.76	44.33	493.22	493.56
2J	77+11.76	44.85	493.45	493.80
2K	77+21.76	45.37	493.67	494.04
2L	77+31.76	45.89	493.90	494.26
2M	77+41.76	46.41	494.12	494.48
2N	77+51.76	46.92	494.35	494.69
2O	77+61.76	47.44	494.57	494.89
2P	77+71.76	47.96	494.80	495.08
2Q	77+81.76	48.48	495.02	495.27
2R	304+43.72	-2.00	495.25	495.46
2S	304+53.72	-2.00	495.47	495.64
2T	304+63.72	-2.00	495.70	495.83
2U	304+73.72	-2.00	495.92	496.02
2V	304+83.72	-2.00	496.14	496.21
2W	304+93.72	-2.00	496.37	496.41
CL Pier 2C	305+07.82	-2.00	496.68	496.71

℄ RAMP C

Location	Station	Offset	Theoretical Grade Elevations	Theoretical Grade Elevations Adjusted for Dead Load Deflection and Grinding
2R	304+43.72	0.00	495.21	495.42
2S	304+53.72	0.00	495.43	495.61
2T	304+63.72	0.00	495.66	495.79
2U	304+73.72	0.00	495.88	495.98
2V	304+83.72	0.00	496.10	496.17
2W	304+93.72	0.00	496.33	496.37
CL Pier 2C	305+07.82	0.00	496.64	496.67

GIRDER 16

Location	Station	Offset	Theoretical Grade Elevations	Theoretical Grade Elevations Adjusted for Dead Load Deflection and Grinding
CL Pier 1	76+11.76	47.67	491.04	491.06
2A	76+21.76	48.19	491.27	491.31
2B	76+31.76	48.70	491.49	491.56
2C	76+41.76	49.22	491.72	491.83
2D	76+51.76	49.74	491.94	492.09
2E	76+61.76	50.26	492.16	492.36
2F	76+71.76	50.78	492.39	492.63
2G	76+81.76	51.30	492.61	492.89
2H	76+91.76	51.82	492.84	493.15
2I	77+01.76	52.34	493.06	493.41
2J	77+11.76	52.86	493.29	493.65
2K	77+21.76	53.38	493.51	493.89
2L	77+31.76	53.90	493.74	494.11
2M	77+41.76	54.42	493.96	494.33
2N	77+51.76	54.93	494.19	494.54
2O	77+61.76	55.45	494.41	494.74
2P	77+71.76	55.97	494.64	494.93
2Q	77+81.76	56.49	494.86	495.12
2R	304+43.72	6.00	495.09	495.31
2S	304+53.72	6.00	495.31	495.50
2T	304+63.72	6.00	495.54	495.68
2U	304+73.72	6.00	495.76	495.87
2V	304+83.72	6.00	495.98	496.06
2W	304+93.72	6.00	496.21	496.25
CL Pier 2C	305+07.82	6.00	496.52	496.55

Girder No.	DEAD LOAD DEFLECTIONS SPAN 3				
	C1	C2	C3	C4	C5
9	3/8"	1 1/4"	3/4"	50' - 0"	200' - 0"
10	3/8"	1 3/8"	1/8"	50' - 0"	200' - 0"
11	3/4"	1 1/8"	1 1/8"	50' - 0"	200' - 0"
12	1"	2 1/4"	1 1/4"	50' -0"	200' -0 1/8"

Girder No.	DEAD LOAD DEFLECTIONS SPAN 3C				
	C1	C2	C3	C4	C5
13	1 1/8"	4 3/8"	4 1/8"	48' -8 3/4"	194' -11"
14	1 1/2"	3 5/8"	3 1/4"	48' -2 3/4"	192' -11 1/8"
15	1"	2 3/4"	2 3/8"	47' -8 3/4"	190' -11 1/8"
16	5/8"	1 7/8"	1 5/8"	47' -2 3/4"	188' -11 1/4"

To determine "t": After all structural steel has been erected, elevations of the top flanges of the beams shall be taken at intervals shown below. These elevations subtracted from the "Theoretical Grade Elevations Adjusted for Dead Load Deflection and Grinding" shown on S-37 & S-38, minus the initial slab thickness prior to grinding, equals the fillet heights "t" above top flange of beams.

The slab is to be ground after curing to achieve smoothness, but the slab is not to be ground to elevations below the "Theoretical Grade Elevations" shown below. For grinding the deck, see Special Provisions.

FILLET HEIGHTS

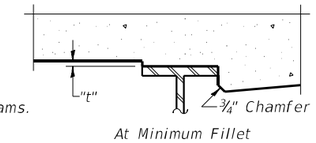

At Minimum Fillet

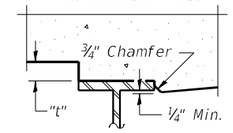

At Maximum Fillet

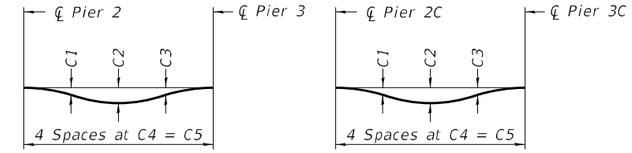

DEAD LOAD DEFLECTION DIAGRAM

(Includes weight of concrete only.)

Note:
The above deflections are not to be used in the field if the engineer is working from the grade elevations adjusted for dead load deflections and grinding as shown S-37 & S-38.

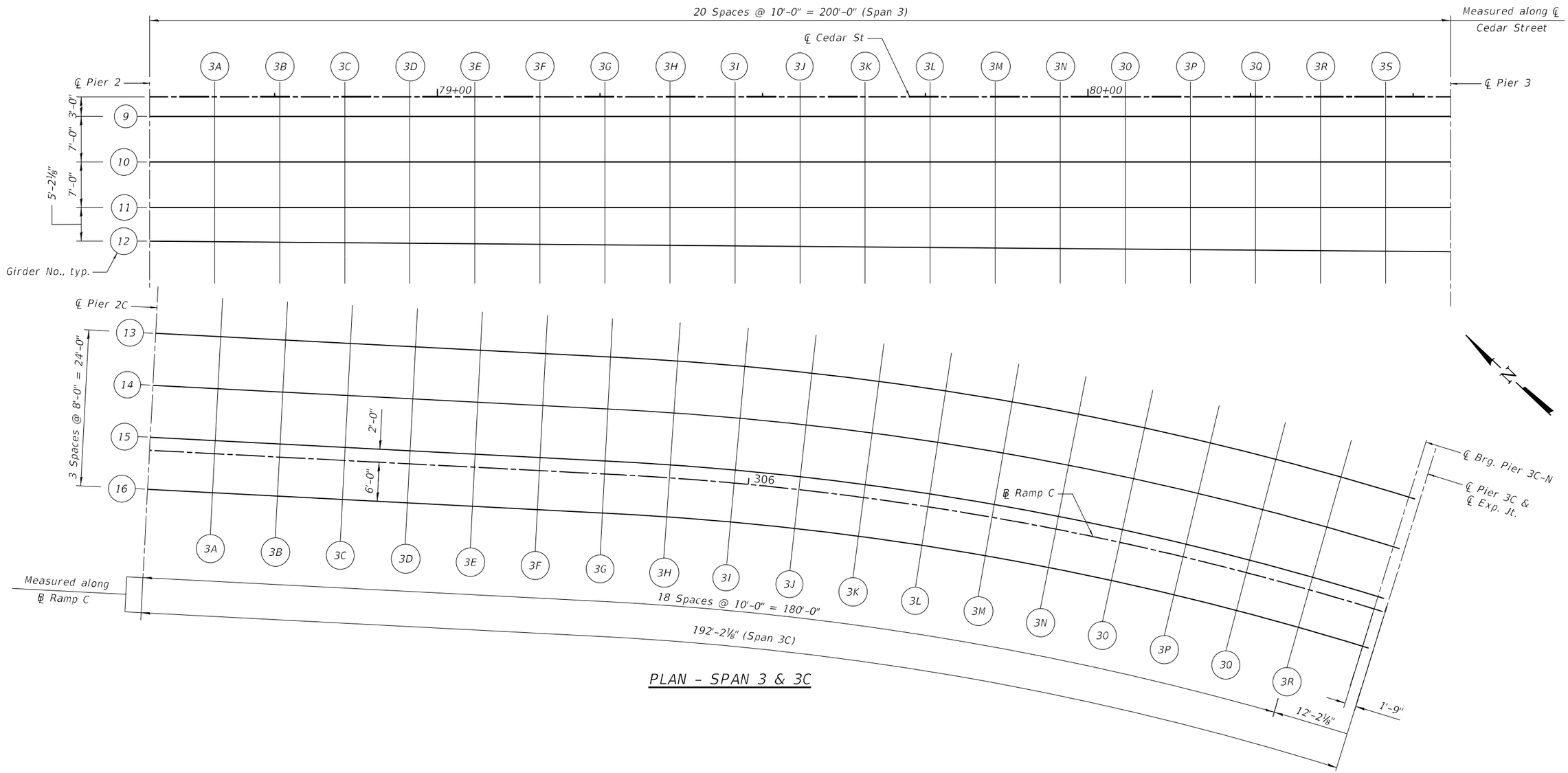

PLAN - SPAN 3 & 3C

MODEL: Default
FILE NAME: pw:\\mb-us-pw.bentley.com:mb-us-pw-03\Documents\Chicago IL\01 Projects\179740 IDOT Cedar\SHEA PhII\5.0 CADD\CAD Sheets\0900182-48C55-036-TC57 RT.dgn

Michael Baker INTERNATIONAL
200 W Adams Street
Suite 1800
Chicago, IL 60606
PH: 312.707.8770
FAX: 312.707.8804

USER NAME = DLamb	DESIGNED - JMK/ADM	REVISED -
	CHECKED - AMR	REVISED -
PLOT SCALE = 15.9999 ' / in.	DRAWN - DMJ	REVISED -
PLOT DATE = 6/6/2023	CHECKED - AMR	REVISED -

STATE OF ILLINOIS
DEPARTMENT OF TRANSPORTATION

RT UNIT 1 – TOP OF SLAB ELEVATIONS 7
STRUCTURE NO. 090–0182

SHEET S-36 OF S-194 SHEETS

F.A.P. RTE.	SECTION	COUNTY	TOTAL SHEETS	SHEET NO.
VAR.	13 (HVB, HB-3) BR-1:R	TAZEWELL	1173	562
		CONTRACT NO. 68C55		
	ILLINOIS	FED. AID PROJECT		

℄ CEDAR ST

Location	Station	Offset	Theoretical Grade Elevations	Theoretical Grade Elevations Adjusted for Dead Load Deflection and Grinding
CL Pier 2	78+55.76	0.00	497.73	497.75
3A	78+65.76	0.00	497.96	497.98
3B	78+75.76	0.00	498.20	498.22
3C	78+85.76	0.00	498.43	498.45
3D	78+95.76	0.00	498.67	498.69
3E	79+05.76	0.00	498.90	498.92
3F	79+15.76	0.00	499.14	499.16
3G	79+25.76	0.00	499.37	499.39
3H	79+35.76	0.00	499.61	499.63
3I	79+45.76	0.00	499.84	499.86
3J	79+55.76	0.00	500.08	500.10
3K	79+65.76	0.00	500.31	500.33
3L	79+75.76	0.00	500.55	500.57
3M	79+85.76	0.00	500.78	500.80
3N	79+95.76	0.00	501.02	501.04
3O	80+05.76	0.00	501.25	501.27
3P	80+15.76	0.00	501.49	501.51
3Q	80+25.76	0.00	501.72	501.74
3R	80+35.76	0.00	501.96	501.98
3S	80+45.76	0.00	502.19	502.21
CL Pier 3	80+55.76	0.00	502.43	502.45

GIRDER 9

Location	Station	Offset	Theoretical Grade Elevations	Theoretical Grade Elevations Adjusted for Dead Load Deflection and Grinding
CL Pier 2	78+55.76	3.00	497.67	497.69
3A	78+65.76	3.00	497.90	497.92
3B	78+75.76	3.00	498.14	498.15
3C	78+85.76	3.00	498.37	498.40
3D	78+95.76	3.00	498.61	498.64
3E	79+05.76	3.00	498.84	498.90
3F	79+15.76	3.00	499.08	499.15
3G	79+25.76	3.00	499.31	499.40
3H	79+35.76	3.00	499.55	499.66
3I	79+45.76	3.00	499.78	499.91
3J	79+55.76	3.00	500.02	500.15
3K	79+65.76	3.00	500.25	500.38
3L	79+75.76	3.00	500.49	500.61
3M	79+85.76	3.00	500.72	500.84
3N	79+95.76	3.00	500.96	501.06
3O	80+05.76	3.00	501.19	501.28
3P	80+15.76	3.00	501.43	501.49
3Q	80+25.76	3.00	501.66	501.71
3R	80+35.76	3.00	501.90	501.93
3S	80+45.76	3.00	502.13	502.16
CL Pier 3	80+55.76	3.00	502.37	502.39

GIRDER 10

Location	Station	Offset	Theoretical Grade Elevations	Theoretical Grade Elevations Adjusted for Dead Load Deflection and Grinding
CL Pier 2	78+55.76	10.00	497.53	497.55
3A	78+65.76	10.00	497.76	497.78
3B	78+75.76	10.00	498.00	498.02
3C	78+85.76	10.00	498.23	498.27
3D	78+95.76	10.00	498.47	498.52
3E	79+05.76	10.00	498.70	498.77
3F	79+15.76	10.00	498.94	499.03
3G	79+25.76	10.00	499.17	499.29
3H	79+35.76	10.00	499.41	499.54
3I	79+45.76	10.00	499.64	499.79
3J	79+55.76	10.00	499.88	500.03
3K	79+65.76	10.00	500.11	500.27
3L	79+75.76	10.00	500.35	500.50
3M	79+85.76	10.00	500.58	500.72
3N	79+95.76	10.00	500.82	500.94
3O	80+05.76	10.00	501.05	501.15
3P	80+15.76	10.00	501.29	501.36
3Q	80+25.76	10.00	501.52	501.58
3R	80+35.76	10.00	501.76	501.80
3S	80+45.76	10.00	501.99	502.02
CL Pier 3	80+55.76	10.00	502.23	502.25

GIRDER 11

Location	Station	Offset	Theoretical Grade Elevations	Theoretical Grade Elevations Adjusted for Dead Load Deflection and Grinding
CL Pier 2	78+55.76	17.00	497.39	497.41
3A	78+65.76	17.00	497.62	497.64
3B	78+75.76	17.00	497.86	497.89
3C	78+85.76	17.00	498.09	498.14
3D	78+95.76	17.00	498.33	498.39
3E	79+05.76	17.00	498.56	498.65
3F	79+15.76	17.00	498.80	498.91
3G	79+25.76	17.00	499.03	499.17
3H	79+35.76	17.00	499.27	499.43
3I	79+45.76	17.00	499.50	499.68
3J	79+55.76	17.00	499.74	499.92
3K	79+65.76	17.00	499.97	500.15
3L	79+75.76	17.00	500.21	500.38
3M	79+85.76	17.00	500.44	500.60
3N	79+95.76	17.00	500.68	500.81
3O	80+05.76	17.00	500.91	501.02
3P	80+15.76	17.00	501.15	501.23
3Q	80+25.76	17.00	501.38	501.45
3R	80+35.76	17.00	501.62	501.66
3S	80+45.76	17.00	501.85	501.88
CL Pier 3	80+55.76	17.00	502.09	502.11

GIRDER 12

Location	Station	Offset	Theoretical Grade Elevations	Theoretical Grade Elevations Adjusted for Dead Load Deflection and Grinding
CL Pier 2	78+55.76	22.17	497.29	497.31
3A	78+65.76	22.25	497.52	497.54
3B	78+75.76	22.33	497.75	497.78
3C	78+85.76	22.42	497.99	498.04
3D	78+95.76	22.50	498.22	498.29
3E	79+05.76	22.58	498.45	498.55
3F	79+15.76	22.66	498.69	498.81
3G	79+25.76	22.74	498.92	499.08
3H	79+35.76	22.82	499.15	499.33
3I	79+45.76	22.90	499.39	499.58
3J	79+55.76	22.98	499.62	499.82
3K	79+65.76	23.07	499.85	500.06
3L	79+75.76	23.15	500.09	500.28
3M	79+85.76	23.23	500.32	500.49
3N	79+95.76	23.31	500.55	500.70
3O	80+05.76	23.39	500.79	500.91
3P	80+15.76	23.47	501.02	501.12
3Q	80+25.76	23.55	501.25	501.32
3R	80+35.76	23.63	501.49	501.53
3S	80+45.76	23.72	501.72	501.75
CL Pier 3	80+55.76	23.80	501.95	501.97

GIRDER 13

Location	Station	Offset	Theoretical Grade Elevations	Theoretical Grade Elevations Adjusted for Dead Load Deflection and Grinding
CL Pier 2C	305+07.82	-18.00	497.00	497.03
3A	305+17.82	-18.00	497.23	497.26
3B	305+27.82	-18.00	497.48	497.54
3C	305+37.82	-18.00	497.77	497.87
3D	305+47.82	-18.00	498.06	498.20
3E	305+57.82	-18.00	498.35	498.54
3F	305+67.82	-18.00	498.64	498.88
3G	305+77.82	-18.00	498.94	499.23
3H	305+87.82	-18.00	499.22	499.56
3I	305+97.82	-18.00	499.47	499.86
3J	306+07.82	-18.00	499.70	500.12
3K	306+17.82	-18.00	499.91	500.34
3L	306+27.82	-18.00	500.10	500.53
3M	306+37.82	-18.00	500.24	500.65
3N	306+47.82	-18.00	500.31	500.69
3O	306+57.82	-18.00	500.37	500.70
3P	306+67.82	-18.00	500.40	500.66
3Q	306+77.82	-18.00	500.41	500.60
3R	306+87.82	-18.00	500.39	500.50
CL Brg. Pier 3C-N	306+98.25	-18.00	500.35	500.37
CL Pier 3C	307+00.00	-18.00	500.34	500.36

GIRDER 14

Location	Station	Offset	Theoretical Grade Elevations	Theoretical Grade Elevations Adjusted for Dead Load Deflection and Grinding
CL Pier 2C	305+07.82	-10.00	496.84	496.87
3A	305+17.82	-10.00	497.07	497.10
3B	305+27.82	-10.00	497.31	497.36
3C	305+37.82	-10.00	497.57	497.64
3D	305+47.82	-10.00	497.83	497.94
3E	305+57.82	-10.00	498.09	498.24
3F	305+67.82	-10.00	498.35	498.54
3G	305+77.82	-10.00	498.62	498.86
3H	305+87.82	-10.00	498.87	499.15
3I	305+97.82	-10.00	499.10	499.41
3J	306+07.82	-10.00	499.30	499.63
3K	306+17.82	-10.00	499.48	499.82
3L	306+27.82	-10.00	499.64	499.98
3M	306+37.82	-10.00	499.76	500.09
3N	306+47.82	-10.00	499.83	500.14
3O	306+57.82	-10.00	499.89	500.15
3P	306+67.82	-10.00	499.92	500.13
3Q	306+77.82	-10.00	499.93	500.08
3R	306+87.82	-10.00	499.91	500.00
CL Brg. Pier 3C-N	306+98.25	-10.00	499.87	499.89
CL Pier 3C	307+00.00	-10.00	499.86	499.88

GIRDER 15

Location	Station	Offset	Theoretical Grade Elevations	Theoretical Grade Elevations Adjusted for Dead Load Deflection and Grinding
CL Pier 2C	305+07.82	-2.00	496.68	496.71
3A	305+17.82	-2.00	496.91	496.93
3B	305+27.82	-2.00	497.14	497.17
3C	305+37.82	-2.00	497.37	497.42
3D	305+47.82	-2.00	497.60	497.68
3E	305+57.82	-2.00	497.83	497.94
3F	305+67.82	-2.00	498.06	498.21
3G	305+77.82	-2.00	498.30	498.48
3H	305+87.82	-2.00	498.52	498.73
3I	305+97.82	-2.00	498.72	498.96
3J	306+07.82	-2.00	498.89	499.15
3K	306+17.82	-2.00	499.04	499.31
3L	306+27.82	-2.00	499.17	499.43
3M	306+37.82	-2.00	499.28	499.53
3N	306+47.82	-2.00	499.35	499.58
3O	306+57.82	-2.00	499.41	499.61
3P	306+67.82	-2.00	499.44	499.60
3Q	306+77.82	-2.00	499.45	499.57
3R	306+87.82	-2.00	499.43	499.50
CL Brg. Pier 3C-N	306+98.25	-2.00	499.39	499.41
CL Pier 3C	307+00.00	-2.00	499.38	499.40

℄ RAMP C

Location	Station	Offset	Theoretical Grade Elevations	Theoretical Grade Elevations Adjusted for Dead Load Deflection and Grinding
CL Pier 2C	305+07.82	0.00	496.64	496.67
3A	305+17.82	0.00	496.87	496.89
3B	305+27.82	0.00	497.09	497.13
3C	305+37.82	0.00	497.32	497.37
3D	305+47.82	0.00	497.54	497.62
3E	305+57.82	0.00	497.76	497.87
3F	305+67.82	0.00	497.99	498.13
3G	305+77.82	0.00	498.22	498.39
3H	305+87.82	0.00	498.44	498.63
3I	305+97.82	0.00	498.62	498.84
3J	306+07.82	0.00	498.79	499.03
3K	306+17.82	0.00	498.94	499.18
3L	306+27.82	0.00	499.06	499.30
3M	306+37.82	0.00	499.16	499.39
3N	306+47.82	0.00	499.23	499.45
3O	306+57.82	0.00	499.29	499.47
3P	306+67.82	0.00	499.32	499.47
3Q	306+77.82	0.00	499.33	499.44
3R	306+87.82	0.00	499.31	499.38
CL Brg. Pier 3C-N	306+98.25	0.00	499.27	499.29
CL Pier 3C	307+00.00	0.00	499.26	499.28

GIRDER 16

Location	Station	Offset	Theoretical Grade Elevations	Theoretical Grade Elevations Adjusted for Dead Load Deflection and Grinding
CL Pier 2C	305+07.82	6.00	496.52	496.55
3A	305+17.82	6.00	496.75	496.77
3B	305+27.82	6.00	496.96	496.99
3C	305+37.82	6.00	497.16	497.20
3D	305+47.82	6.00	497.37	497.42
3E	305+57.82	6.00	497.57	497.65
3F	305+67.82	6.00	497.77	497.88
3G	305+77.82	6.00	497.98	498.11
3H	305+87.82	6.00	498.17	498.32
3I	305+97.82	6.00	498.34	498.51
3J	306+07.82	6.00	498.49	498.66
3K	306+17.82	6.00	498.61	498.79
3L	306+27.82	6.00	498.71	498.89
3M	306+37.82	6.00	498.80	498.97
3N	306+47.82	6.00	498.87	499.03
3O	306+57.82	6.00	498.93	499.07
3P	306+67.82	6.00	498.96	499.07
3Q	306+77.82	6.00	498.97	499.05
3R	306+87.82	6.00	498.95	499.01
CL Brg. Pier 3C-N	306+98.25	6.00	498.91	498.93
CL Pier 3C	307+00.00	6.00	498.90	498.92

Girder No.	DEAD LOAD DEFLECTIONS SPAN 4				
	D1	D2	D3	D4	D5
9	⅜"	⅞"	⅞"	34' -2 ¼"	136' -9"
10	½"	1 ⅛"	1"	34' -2 ¼"	136' -9"
11	½"	1 ¼"	1 ⅛"	34' -2 ¼"	136' -9"
12	⅝"	1 ⅜"	1 ¼"	34' -2 ¼"	136' -9"

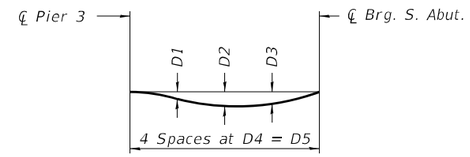

DEAD LOAD DEFLECTION DIAGRAM

(Includes weight of concrete only.)

Note:
The above deflections are not to be used in the field if the engineer is working from the grade elevations adjusted for dead load deflections and grinding as shown on S-40.

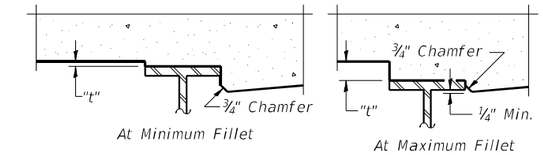

To determine "t": After all structural steel has been erected, elevations of the top flanges of the beams shall be taken at intervals shown below. These elevations subtracted from the "Theoretical Grade Elevations Adjusted for Dead Load Deflection and Grinding" shown on S-40, minus the initial slab thickness prior to grinding, equals the fillet heights "t" above top flange of beams.
The slab is to be ground after curing to achieve smoothness, but the slab is not to be ground to elevations below the "Theoretical Grade Elevations" shown below. For grinding the deck, see Special Provisions.

FILLET HEIGHTS

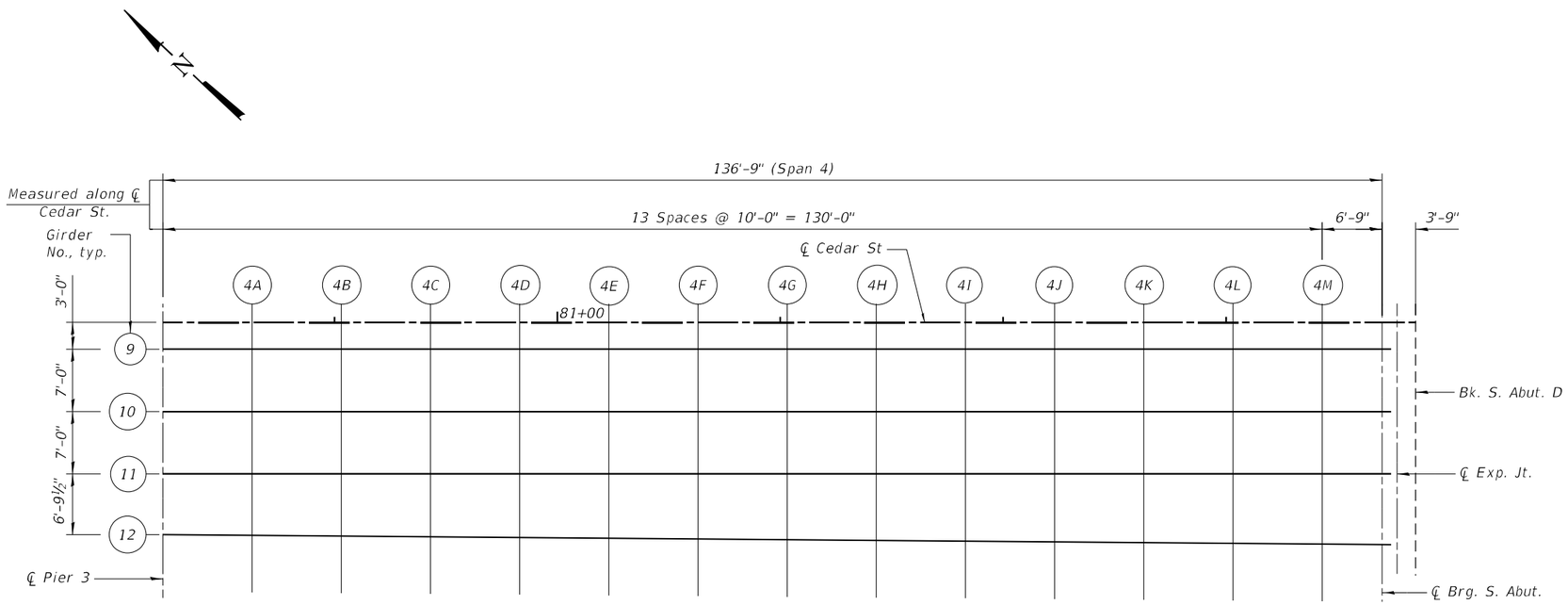

PLAN - SPAN 4

℄ CEDAR ST

Location	Station	Offset	Theoretical Grade Elevations	Theoretical Grade Elevations Adjusted for Dead Load Deflection and Grinding
CL Pier 3	80+55.76	0.00	502.43	502.45
4A	80+65.76	0.00	502.66	502.68
4B	80+75.76	0.00	502.90	502.92
4C	80+85.76	0.00	503.13	503.15
4D	80+95.76	0.00	503.37	503.39
4E	81+05.76	0.00	503.60	503.62
4F	81+15.76	0.00	503.84	503.86
4G	81+25.76	0.00	504.07	504.09
4H	81+35.76	0.00	504.31	504.33
4I	81+45.76	0.00	504.54	504.56
4J	81+55.76	0.00	504.78	504.80
4K	81+65.76	0.00	505.01	505.03
4L	81+75.76	0.00	505.25	505.27
4M	81+85.76	0.00	505.48	505.50
CL Brg. S. Abut.	81+92.51	0.00	505.64	505.66
CL Exp. Jt.	81+94.03	0.00	505.68	505.70
Bk. S. Abut.	81+96.26	0.00	505.73	505.75

GIRDER 9

Location	Station	Offset	Theoretical Grade Elevations	Theoretical Grade Elevations Adjusted for Dead Load Deflection and Grinding
CL Pier 3	80+55.76	3.00	502.37	502.39
4A	80+65.76	3.00	502.60	502.63
4B	80+75.76	3.00	502.84	502.87
4C	80+85.76	3.00	503.07	503.12
4D	80+95.76	3.00	503.31	503.37
4E	81+05.76	3.00	503.54	503.62
4F	81+15.76	3.00	503.78	503.87
4G	81+25.76	3.00	504.01	504.11
4H	81+35.76	3.00	504.25	504.35
4I	81+45.76	3.00	504.48	504.58
4J	81+55.76	3.00	504.72	504.81
4K	81+65.76	3.00	504.95	505.03
4L	81+75.76	3.00	505.19	505.25
4M	81+85.76	3.00	505.42	505.46
CL Brg. S. Abut.	81+92.51	3.00	505.58	505.60
CL Exp. Jt.	81+94.03	3.00	505.62	505.64
Bk. S. Abut.	81+96.26	3.00	505.67	505.69

GIRDER 10

Location	Station	Offset	Theoretical Grade Elevations	Theoretical Grade Elevations Adjusted for Dead Load Deflection and Grinding
CL Pier 3	80+55.76	10.00	502.23	502.25
4A	80+65.76	10.00	502.46	502.49
4B	80+75.76	10.00	502.70	502.73
4C	80+85.76	10.00	502.93	502.98
4D	80+95.76	10.00	503.17	503.24
4E	81+05.76	10.00	503.40	503.49
4F	81+15.76	10.00	503.64	503.74
4G	81+25.76	10.00	503.87	503.99
4H	81+35.76	10.00	504.11	504.22
4I	81+45.76	10.00	504.34	504.46
4J	81+55.76	10.00	504.58	504.68
4K	81+65.76	10.00	504.81	504.90
4L	81+75.76	10.00	505.05	505.11
4M	81+85.76	10.00	505.28	505.32
CL Brg. S. Abut.	81+92.51	10.00	505.44	505.46
CL Exp. Jt.	81+94.03	10.00	505.48	505.50
Bk. S. Abut.	81+96.26	10.00	505.53	505.55

GIRDER 11

Location	Station	Offset	Theoretical Grade Elevations	Theoretical Grade Elevations Adjusted for Dead Load Deflection and Grinding
CL Pier 3	80+55.76	17.00	502.09	502.11
4A	80+65.76	17.00	502.32	502.35
4B	80+75.76	17.00	502.56	502.60
4C	80+85.76	17.00	502.79	502.85
4D	80+95.76	17.00	503.03	503.10
4E	81+05.76	17.00	503.26	503.36
4F	81+15.76	17.00	503.50	503.61
4G	81+25.76	17.00	503.73	503.86
4H	81+35.76	17.00	503.97	504.10
4I	81+45.76	17.00	504.20	504.33
4J	81+55.76	17.00	504.44	504.55
4K	81+65.76	17.00	504.67	504.77
4L	81+75.76	17.00	504.91	504.98
4M	81+85.76	17.00	505.14	505.19
CL Brg. S. Abut.	81+92.51	17.00	505.30	505.32
CL Exp. Jt.	81+94.03	17.00	505.34	505.36
Bk. S. Abut.	81+96.26	17.00	505.39	505.41

GIRDER 12

Location	Station	Offset	Theoretical Grade Elevations	Theoretical Grade Elevations Adjusted for Dead Load Deflection and Grinding
CL Pier 3	80+55.76	23.80	501.95	501.97
4A	80+65.76	23.88	502.19	502.21
4B	80+75.76	23.96	502.42	502.46
4C	80+85.76	24.04	502.65	502.71
4D	80+95.76	24.12	502.89	502.97
4E	81+05.76	24.20	503.12	503.23
4F	81+15.76	24.28	503.35	503.48
4G	81+25.76	24.36	503.59	503.73
4H	81+35.76	24.45	503.82	503.96
4I	81+45.76	24.53	504.05	504.19
4J	81+55.76	24.61	504.29	504.42
4K	81+65.76	24.69	504.52	504.63
4L	81+75.76	24.77	504.75	504.83
4M	81+85.76	24.85	504.99	505.03
CL Brg. S. Abut.	81+92.51	24.91	505.14	505.16
CL Exp. Jt.	81+94.03	24.92	505.18	505.20
Bk. S. Abut.	81+96.26	24.94	505.23	505.25

Girder No.	DEAD LOAD DEFLECTIONS SPAN 4C				
	F1	F2	F3	F4	F5
13	1"	1 1/4"	1/2"	27' -8 1/8"	110' -8 3/8"
14	7/8"	1"	1/2"	27' -0 1/2"	108' -2"
15	3/4"	7/8"	3/8"	26' -4 7/8"	105' -7 5/8"
16	5/8"	3/4"	3/8"	25' -9 1/4"	103' -1 1/8"

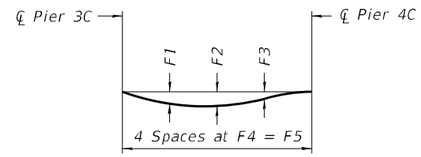

DEAD LOAD DEFLECTION DIAGRAM

(Includes weight of concrete only.)

Note:
The above deflections are not to be used in the field if the engineer is working from the grade elevations adjusted for dead load deflections and grinding as shown on S-42.

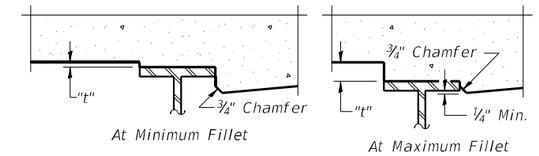

To determine "t": After all structural steel has been erected, elevations of the top flanges of the beams shall be taken at intervals shown below. These elevations subtracted from the "Theoretical Grade Elevations Adjusted for Dead Load Deflection and Grinding" shown on S-42, minus the initial slab thickness prior to grinding, equals the fillet heights "t" above top flange of beams.

The slab is to be ground after curing to achieve smoothness, but the slab is not to be ground to elevations below the "Theoretical Grade Elevations" shown below. For grinding the deck, see Special Provisions.

FILLET HEIGHTS

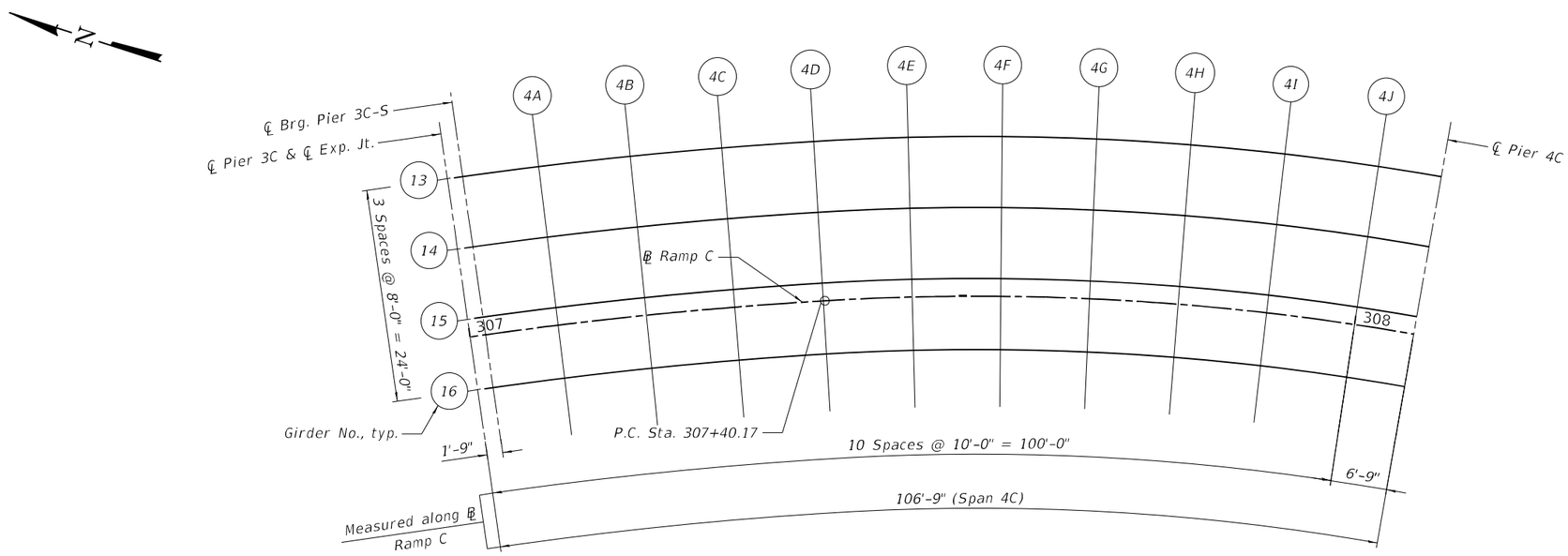

PLAN - SPAN 4

GIRDER 13

Location	Station	Offset	Theoretical Grade Elevations	Theoretical Grade Elevations Adjusted for Dead Load Deflection and Grinding
CL Pier 3C	307+00.00	-18.00	500.34	500.36
CL Brg. Pier 3C-S	307+01.75	-18.00	500.33	500.35
4A	307+10.00	-18.00	500.28	500.33
4B	307+20.00	-18.00	500.19	500.28
4C	307+30.00	-18.00	500.08	500.19
4D	307+40.00	-18.00	499.95	500.07
4E	307+50.00	-18.00	499.79	499.92
4F	307+60.00	-18.00	499.61	499.73
4G	307+70.00	-18.00	499.41	499.50
4H	307+80.00	-18.00	499.19	499.26
4I	307+90.00	-18.00	498.94	498.98
4J	308+00.00	-18.00	498.67	498.70
CL Pier 4C	308+06.75	-18.00	498.48	498.50

GIRDER 14

Location	Station	Offset	Theoretical Grade Elevations	Theoretical Grade Elevations Adjusted for Dead Load Deflection and Grinding
CL Pier 3C	307+00.00	-10.00	499.86	499.88
CL Brg. Pier 3C-S	307+01.75	-10.00	499.85	499.87
4A	307+10.00	-10.00	499.80	499.84
4B	307+20.00	-10.00	499.71	499.78
4C	307+30.00	-10.00	499.60	499.69
4D	307+40.00	-10.00	499.47	499.57
4E	307+50.00	-10.00	499.31	499.42
4F	307+60.00	-10.00	499.13	499.23
4G	307+70.00	-10.00	498.93	499.01
4H	307+80.00	-10.00	498.71	498.77
4I	307+90.00	-10.00	498.46	498.50
4J	308+00.00	-10.00	498.19	498.22
CL Pier 4C	308+06.75	-10.00	498.00	498.02

GIRDER 15

Location	Station	Offset	Theoretical Grade Elevations	Theoretical Grade Elevations Adjusted for Dead Load Deflection and Grinding
CL Pier 3C	307+00.00	-2.00	499.38	499.40
CL Brg. Pier 3C-S	307+01.75	-2.00	499.37	499.39
4A	307+10.00	-2.00	499.32	499.36
4B	307+20.00	-2.00	499.23	499.30
4C	307+30.00	-2.00	499.12	499.20
4D	307+40.00	-2.00	498.99	499.08
4E	307+50.00	-2.00	498.83	498.93
4F	307+60.00	-2.00	498.65	498.74
4G	307+70.00	-2.00	498.45	498.52
4H	307+80.00	-2.00	498.23	498.28
4I	307+90.00	-2.00	497.98	498.02
4J	308+00.00	-2.00	497.71	497.74
CL Pier 4C	308+06.75	-2.00	497.52	497.54

℄ RAMP C

Location	Station	Offset	Theoretical Grade Elevations	Theoretical Grade Elevations Adjusted for Dead Load Deflection and Grinding
CL Pier 3C	307+00.00	0.00	499.26	499.28
CL Brg. Pier 3C-S	307+01.75	0.00	499.25	499.27
4A	307+10.00	0.00	499.20	499.24
4B	307+20.00	0.00	499.11	499.18
4C	307+30.00	0.00	499.00	499.08
4D	307+40.00	0.00	498.87	498.96
4E	307+50.00	0.00	498.71	498.80
4F	307+60.00	0.00	498.53	498.62
4G	307+70.00	0.00	498.33	498.40
4H	307+80.00	0.00	498.11	498.16
4I	307+90.00	0.00	497.86	497.90
4J	308+00.00	0.00	497.59	497.62
CL Pier 4C	308+06.75	0.00	497.40	497.42

GIRDER 16

Location	Station	Offset	Theoretical Grade Elevations	Theoretical Grade Elevations Adjusted for Dead Load Deflection and Grinding
CL Pier 3C	307+00.00	6.00	498.90	498.92
CL Brg. Pier 3C-S	307+01.75	6.00	498.89	498.91
4A	307+10.00	6.00	498.84	498.88
4B	307+20.00	6.00	498.75	498.81
4C	307+30.00	6.00	498.64	498.72
4D	307+40.00	6.00	498.51	498.59
4E	307+50.00	6.00	498.35	498.44
4F	307+60.00	6.00	498.17	498.25
4G	307+70.00	6.00	497.97	498.04
4H	307+80.00	6.00	497.75	497.80
4I	307+90.00	6.00	497.50	497.54
4J	308+00.00	6.00	497.23	497.26
CL Pier 4C	308+06.75	6.00	497.04	497.06

Girder No.	DEAD LOAD DEFLECTIONS SPAN 5C				
	G1	G2	G3	G4	G5
13	3/4"	1 1/2"	1 1/4"	27' -10 7/8"	111' -7 3/8"
14	1/2"	1 1/8"	1"	27' -2"	108' -8 1/4"
15	7/8"	7/8"	3/4"	26' -5 1/4"	105' -8 3/4"
16	3/8"	3/4"	5/8"	25' -8 3/8"	102' -9 1/2"

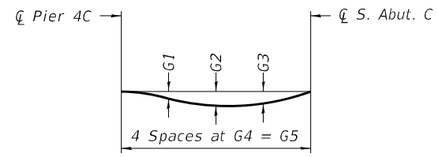

DEAD LOAD DEFLECTION DIAGRAM

(Includes weight of concrete only.)

Note:
The above deflections are not to be used in the field if the engineer is working from the grade elevations adjusted for dead load deflections and grinding as shown on S-44.

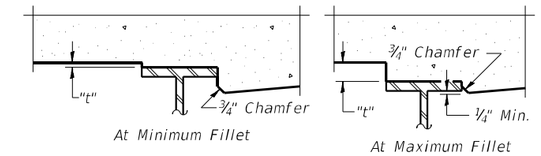

To determine "t": After all structural steel has been erected, elevations of the top flanges of the beams shall be taken at intervals shown below. These elevations subtracted from the "Theoretical Grade Elevations Adjusted for Dead Load Deflection and Grinding" shown on S-44, minus the initial slab thickness prior to grinding, equals the fillet heights "t" above top flange of beams.

The slab is to be ground after curing to achieve smoothness, but the slab is not to be ground to elevations below the "Theoretical Grade Elevations" shown below. For grinding the deck, see Special Provisions.

FILLET HEIGHTS

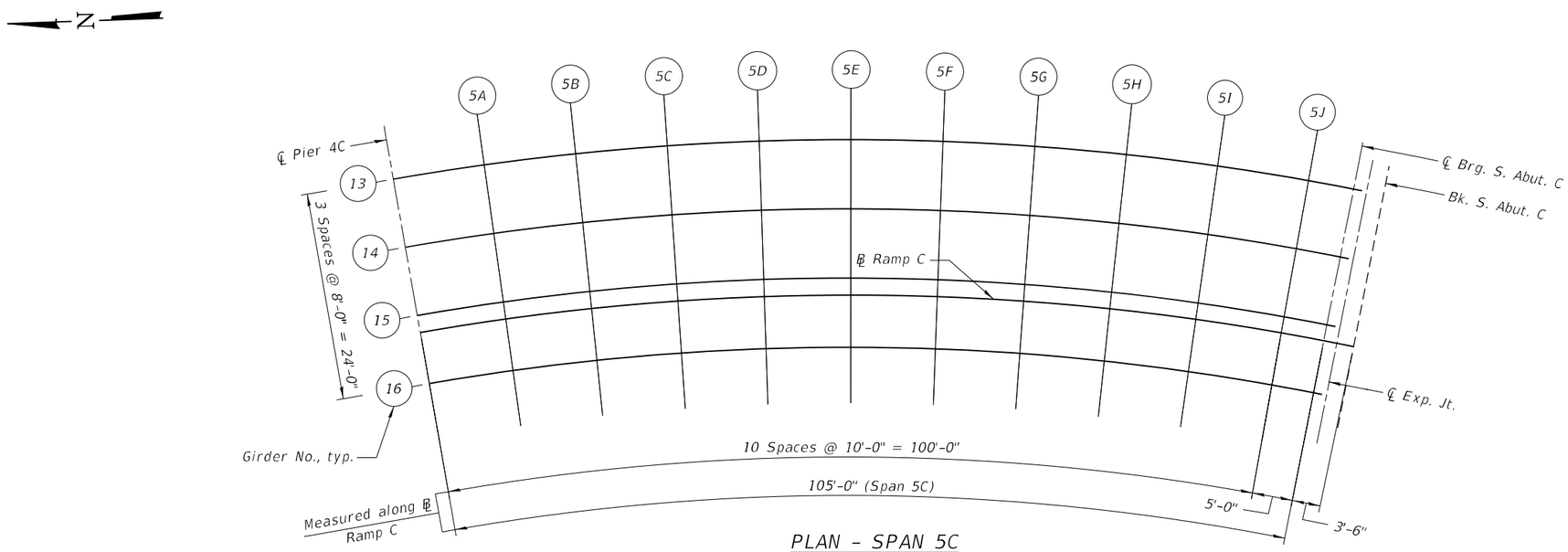

PLAN - SPAN 5C

MODEL: Default
FILE NAME: pw:\\mbs-us-cw.bentley.commbs-us-pw-03\Documents\Chicago IL\01 Projects\179740 IDOT Ceda-SExt PhII\5.0 CADD\CAD Sheets\0900183-68C55-043-ToS3 Unit 2.dgn

Michael Baker INTERNATIONAL
200 W Adams Street
Suite 1800
Chicago, IL 60606
PH: 312.707.8870
FAX: 312.707.8804

USER NAME = DLamb	DESIGNED - JMK/ADM	REVISED -
	CHECKED - AMR	REVISED -
PLOT SCALE = 15:11.9992 ':" / in.	DRAWN - DMJ	REVISED -
PLOT DATE = 6/6/2023	CHECKED - AMR	REVISED -

STATE OF ILLINOIS
DEPARTMENT OF TRANSPORTATION

UNIT 2 – TOP OF SLAB ELEVATION 3
STRUCTURE NO. 090–0182

SHEET S-43 OF S-194 SHEETS

F.A.P. RTE.	SECTION	COUNTY	TOTAL SHEETS	SHEET NO.
VAR.	13 (HVB, HB-3) BR-1;R	TAZEWELL	1173	569
		CONTRACT NO. 68C55		
		ILLINOIS	FED. AID PROJECT	

GIRDER 13

Location	Station	Offset	Theoretical Grade Elevations	Theoretical Grade Elevations Adjusted for Dead Load Deflection and Grinding
CL Pier 4C	308+06.75	-18.00	498.48	498.50
5A	308+16.75	-18.00	498.17	498.21
5B	308+26.75	-18.00	497.84	497.90
5C	308+36.75	-18.00	497.49	497.58
5D	308+46.75	-18.00	497.11	497.23
5E	308+56.75	-18.00	496.72	496.86
5F	308+66.75	-18.00	496.32	496.47
5G	308+76.75	-18.00	495.92	496.06
5H	308+86.75	-18.00	495.52	495.64
5I	308+96.75	-18.00	495.13	495.22
5J	309+06.75	-18.00	494.76	494.81
CL Brg. S. Abut. C	309+11.75	-18.00	494.58	494.60
CL Exp. Jt.	309+13.15	-18.00	494.53	494.55
Bk. S. Abut. C	309+15.25	-18.00	494.46	494.48

GIRDER 14

Location	Station	Offset	Theoretical Grade Elevations	Theoretical Grade Elevations Adjusted for Dead Load Deflection and Grinding
CL Pier 4C	308+06.75	-10.00	498.00	498.02
5A	308+16.75	-10.00	497.69	497.72
5B	308+26.75	-10.00	497.36	497.41
5C	308+36.75	-10.00	497.01	497.08
5D	308+46.75	-10.00	496.63	496.73
5E	308+56.75	-10.00	496.24	496.35
5F	308+66.75	-10.00	495.84	495.96
5G	308+76.75	-10.00	495.44	495.55
5H	308+86.75	-10.00	495.04	495.14
5I	308+96.75	-10.00	494.65	494.73
5J	309+06.75	-10.00	494.28	494.32
CL Brg. S. Abut. C	309+11.75	-10.00	494.10	494.12
CL Exp. Jt.	309+13.15	-10.00	494.05	494.07
Bk. S. Abut. C	309+15.25	-10.00	493.98	494.00

GIRDER 15

Location	Station	Offset	Theoretical Grade Elevations	Theoretical Grade Elevations Adjusted for Dead Load Deflection and Grinding
CL Pier 4C	308+06.75	-2.00	497.52	497.54
5A	308+16.75	-2.00	497.21	497.24
5B	308+26.75	-2.00	496.88	496.93
5C	308+36.75	-2.00	496.53	496.59
5D	308+46.75	-2.00	496.15	496.23
5E	308+56.75	-2.00	495.76	495.85
5F	308+66.75	-2.00	495.36	495.46
5G	308+76.75	-2.00	494.96	495.05
5H	308+86.75	-2.00	494.56	494.64
5I	308+96.75	-2.00	494.17	494.23
5J	309+06.75	-2.00	493.80	493.84
CL Brg. S. Abut. C	309+11.75	-2.00	493.62	493.64
CL Exp. Jt.	309+13.15	-2.00	493.57	493.59
Bk. S. Abut. C	309+15.25	-2.00	493.50	493.52

℄ RAMP C

Location	Station	Offset	Theoretical Grade Elevations	Theoretical Grade Elevations Adjusted for Dead Load Deflection and Grinding
CL Pier 4C	308+06.75	0.00	497.40	497.42
5A	308+16.75	0.00	497.09	497.12
5B	308+26.75	0.00	496.76	496.81
5C	308+36.75	0.00	496.41	496.47
5D	308+46.75	0.00	496.03	496.11
5E	308+56.75	0.00	495.64	495.73
5F	308+66.75	0.00	495.24	495.33
5G	308+76.75	0.00	494.84	494.93
5H	308+86.75	0.00	494.44	494.52
5I	308+96.75	0.00	494.05	494.11
5J	309+06.75	0.00	493.68	493.72
CL Brg. S. Abut. C	309+11.75	0.00	493.50	493.52
CL Exp. Jt.	309+13.15	0.00	493.45	493.47
Bk. S. Abut. C	309+15.25	0.00	493.38	493.40

GIRDER 16

Location	Station	Offset	Theoretical Grade Elevations	Theoretical Grade Elevations Adjusted for Dead Load Deflection and Grinding
CL Pier 4C	308+06.75	6.00	497.04	497.06
5A	308+16.75	6.00	496.73	496.76
5B	308+26.75	6.00	496.40	496.44
5C	308+36.75	6.00	496.05	496.11
5D	308+46.75	6.00	495.67	495.74
5E	308+56.75	6.00	495.28	495.36
5F	308+66.75	6.00	494.88	494.96
5G	308+76.75	6.00	494.48	494.56
5H	308+86.75	6.00	494.08	494.15
5I	308+96.75	6.00	493.69	493.75
5J	309+06.75	6.00	493.32	493.35
CL Brg. S. Abut. C	309+11.75	6.00	493.14	493.16
CL Exp. Jt.	309+13.15	6.00	493.09	493.11
Bk. S. Abut. C	309+15.25	6.00	493.02	493.04

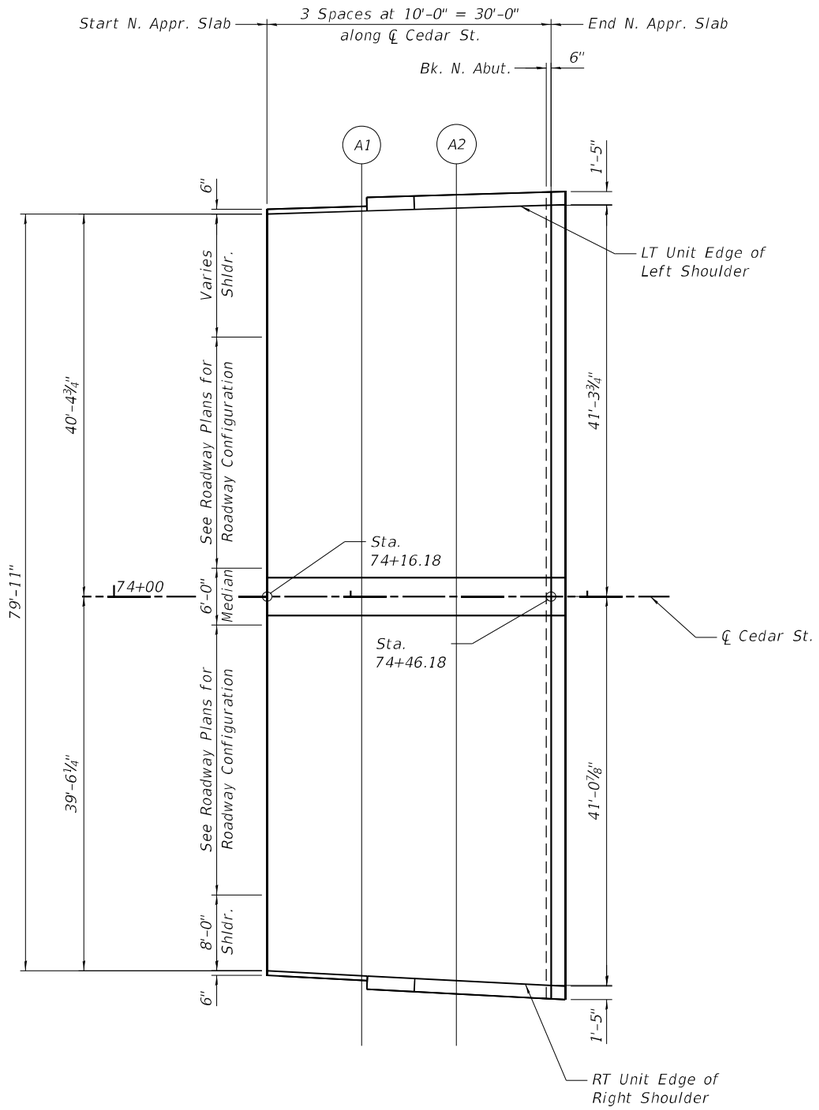

N. APPROACH SLAB PLAN

LT UNIT EDGE OF LEFT SHOULDER

Location	Station	Offset	Theoretical Grade Elevations	Theoretical Grade Elevations Adjusted for Grinding
Start N. Appr. Slab	74+16.18	-40.40	486.37	486.39
A1	74+26.18	-40.70	486.65	486.67
A2	74+36.18	-41.01	486.93	486.95
End N. Appr. Slab	74+46.18	-41.32	487.20	487.22

℄ CEDAR ST.

Location	Station	Offset	Theoretical Grade Elevations	Theoretical Grade Elevations Adjusted for Grinding
Start N. Appr. Slab	74+16.18	0.00	487.18	487.20
A1	74+26.18	0.00	487.47	487.49
A2	74+36.18	0.00	487.75	487.77
End N. Appr. Slab	74+46.18	0.00	488.02	488.04

RT UNIT EDGE OF RIGHT SHOULDER

Location	Station	Offset	Theoretical Grade Elevations	Theoretical Grade Elevations Adjusted for Grinding
Start N. Appr. Slab	74+16.18	39.52	486.39	486.41
A1	74+26.18	40.04	486.67	486.69
A2	74+36.18	40.55	486.94	486.96
End N. Appr. Slab	74+46.18	41.07	487.20	487.22

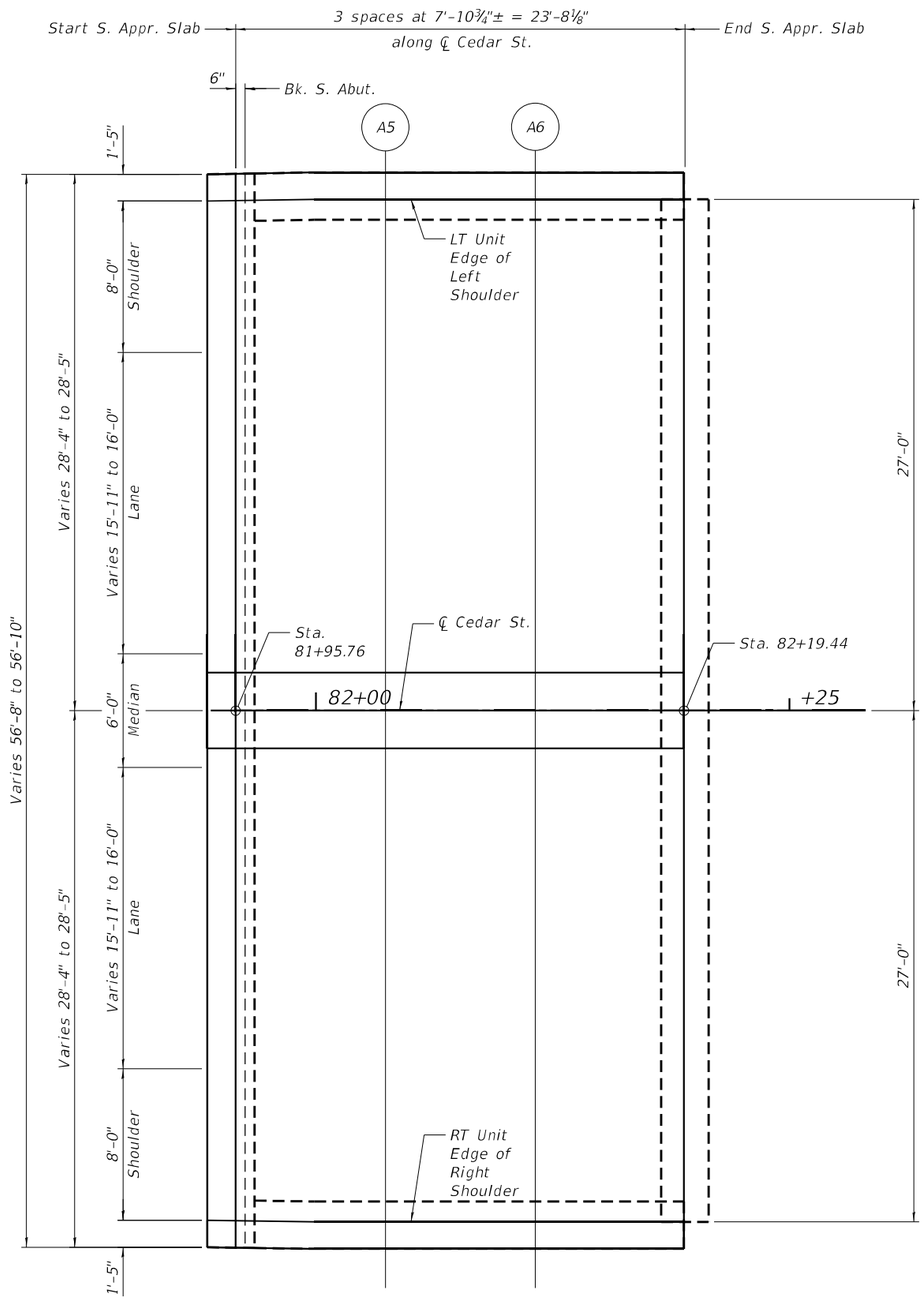

S. APPROACH SLAB PLAN

LT UNIT EDGE OF LEFT SHOULDER

Location	Station	Offset	Theoretical Grade Elevations	Theoretical Grade Elevations Adjusted for Grinding
Start S. Appr. Slab	81+95.76	-26.93	506.13	506.15
A5	82+03.65	-27.00	506.39	506.41
A6	82+11.55	-27.00	506.65	506.67
End S. Appr. Slab	82+19.44	-27.00	506.91	506.93

℄ CEDAR ST.

Location	Station	Offset	Theoretical Grade Elevations	Theoretical Grade Elevations Adjusted for Grinding
Start S. Appr. Slab	81+95.76	0.00	505.72	505.74
A5	82+03.65	0.00	505.90	505.92
A6	82+11.55	0.00	506.09	506.11
End S. Appr. Slab	82+19.44	0.00	506.28	506.30

RT UNIT EDGE OF RIGHT SHOULDER

Location	Station	Offset	Theoretical Grade Elevations	Theoretical Grade Elevations Adjusted for Grinding
Start S. Appr. Slab	81+95.76	26.94	505.18	505.20
A5	82+03.65	27.00	505.36	505.38
A6	82+11.55	27.00	505.53	505.55
End S. Appr. Slab	82+19.44	27.00	505.64	505.66

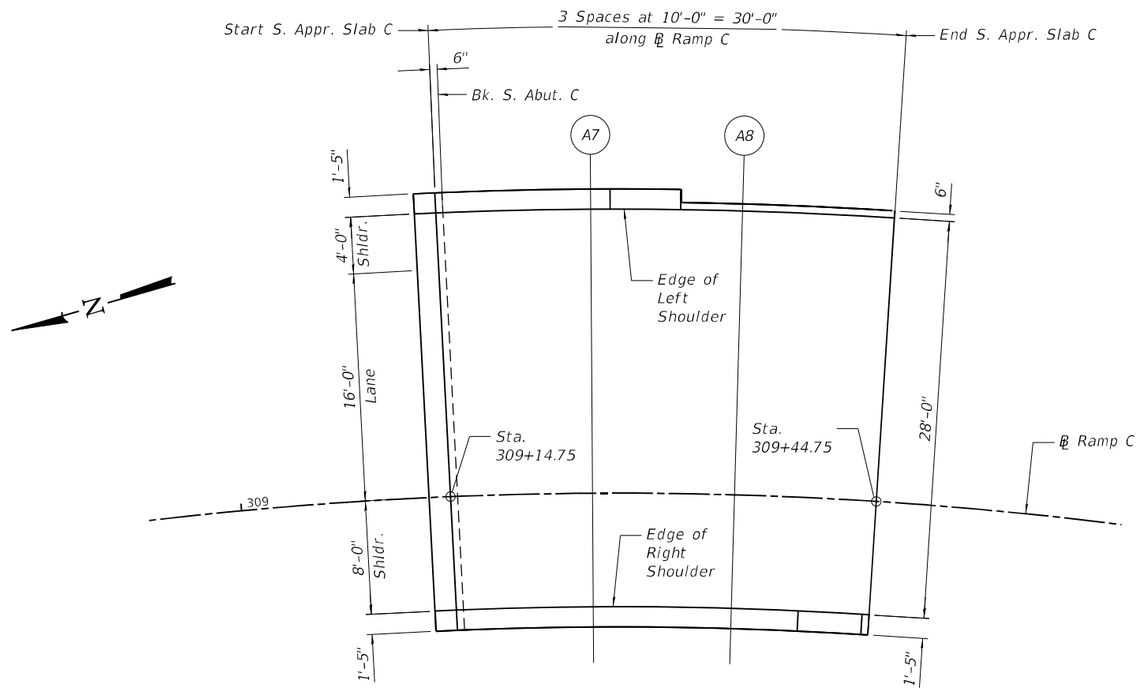

SC APPROACH SLAB PLAN

EDGE OF LEFT SHOULDER

Location	Station	Offset	Theoretical Grade Elevations	Theoretical Grade Elevations Adjusted for Grinding
Start S. Appr. Slab C	309+14.75	-20.00	494.60	494.62
A7	309+24.75	-20.00	494.26	494.28
A8	309+34.75	-20.00	493.93	493.95
End S. Appr. Slab C	309+44.75	-20.00	493.62	493.64

℄ RAMP C

Location	Station	Offset	Theoretical Grade Elevations	Theoretical Grade Elevations Adjusted for Grinding
Start S. Appr. Slab C	309+14.75	0.00	493.40	493.42
A7	309+24.75	0.00	493.06	493.08
A8	309+34.75	0.00	492.73	492.75
End S. Appr. Slab C	309+44.75	0.00	492.42	492.44

EDGE OF RIGHT SHOULDER

Location	Station	Offset	Theoretical Grade Elevations	Theoretical Grade Elevations Adjusted for Grinding
Start S. Appr. Slab C	309+14.75	8.00	492.92	492.94
A7	309+24.75	8.00	492.58	492.60
A8	309+34.75	8.00	492.25	492.27
End S. Appr. Slab C	309+44.75	8.00	491.94	491.96

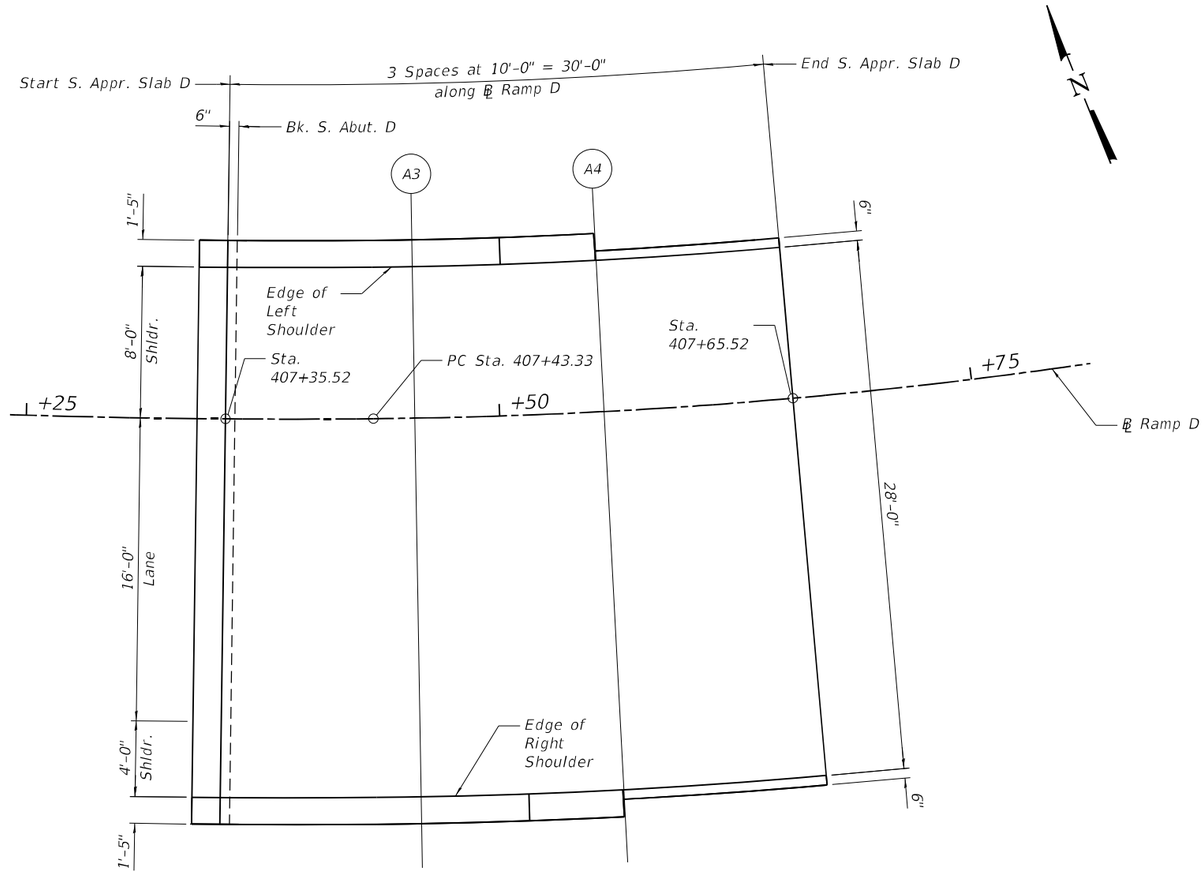

SD APPROACH SLAB PLAN

EDGE OF LEFT SHOULDER

Location	Station	Offset	Theoretical Grade Elevations	Theoretical Grade Elevations Adjusted for Grinding
Start S. Appr. Slab D	407+35.52	-8.00	495.51	495.53
A3	407+45.52	-8.00	495.09	495.11
A4	407+55.52	-8.00	494.65	494.67
End S. Appr. Slab D	407+65.52	-8.00	494.19	494.21

℄ RAMP D

Location	Station	Offset	Theoretical Grade Elevations	Theoretical Grade Elevations Adjusted for Grinding
Start S. Appr. Slab D	407+35.52	0.00	495.99	496.01
A3	407+45.52	0.00	495.57	495.59
A4	407+55.52	0.00	495.13	495.15
End S. Appr. Slab D	407+65.52	0.00	494.67	494.69

EDGE OF RIGHT SHOULDER

Location	Station	Offset	Theoretical Grade Elevations	Theoretical Grade Elevations Adjusted for Grinding
Start S. Appr. Slab D	407+35.52	20.00	497.19	497.21
A3	407+45.52	20.00	496.77	496.79
A4	407+55.52	20.00	496.33	496.35
End S. Appr. Slab D	407+65.52	20.00	495.87	495.89

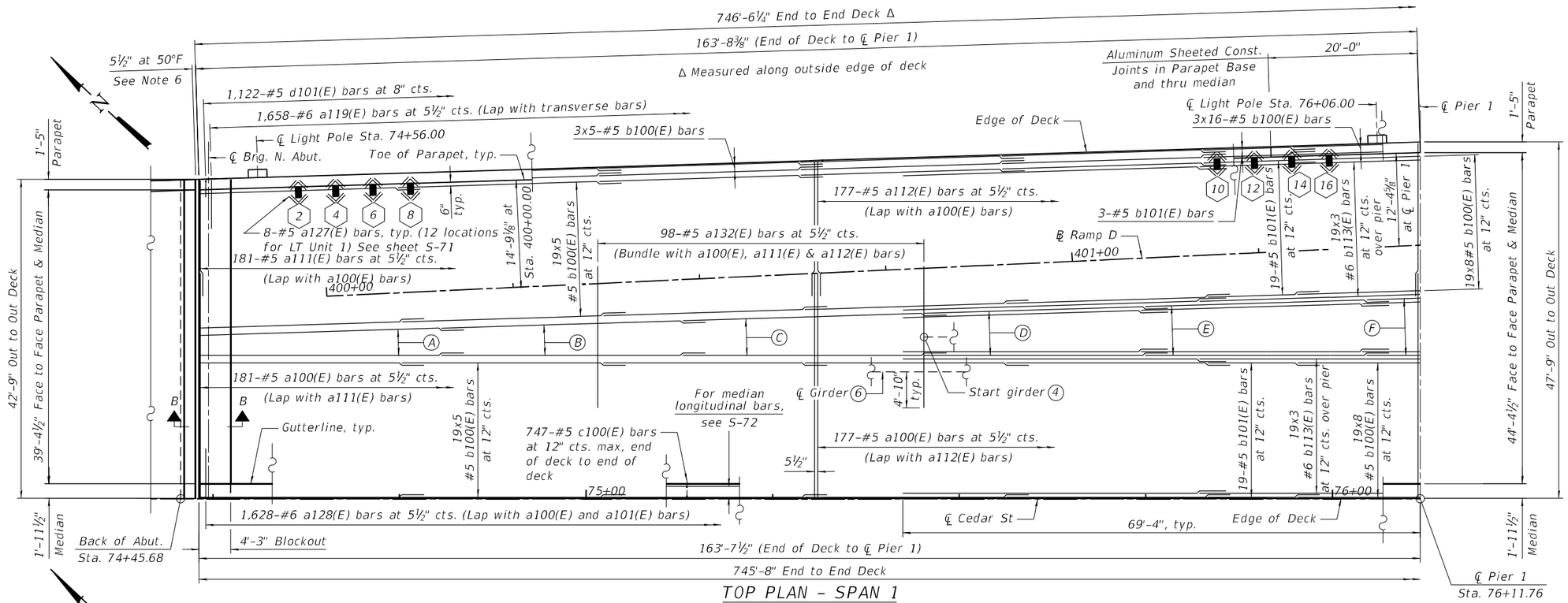

TOP PLAN - SPAN 1

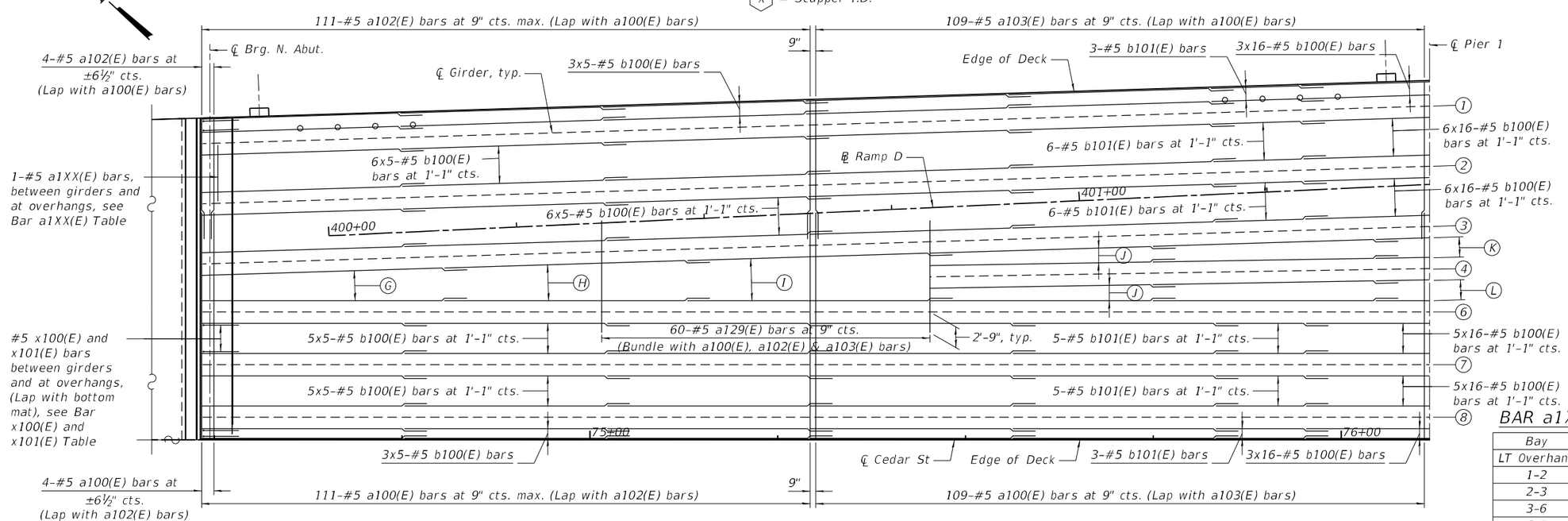

BOTTOM PLAN - SPAN 1

Only showing bottom reinforcement callouts, see Top Plan for other callouts

TOP LONGITUDINAL BARS

- (A) Fan 5-#5 b106(E) bars at 12" cts. max.
- (B) Fan 6-#5 b106(E) bars at 12" cts. max.
- (C) Fan 13-#5 b106(E) bars at 6" cts. max.
- (D) Fan 8-#5 b105(E) bars at 12" cts. max. alternate with 7-#6 b111(E) bars at 12" cts. max.
- (E) Fan 9-#5 b105(E) bars at 12" cts. max. alternate with 8-#6 b109(E) bars at 12" cts. max.
- (F) Fan 10-#5 b105(E) bars at 12" cts. max. alternate with 9-#6 b109(E) bars at 12" cts. max.

NOTES:

1. For Section B-B see S-72.
2. For Bar Bends and Bill of Material, see S-75 and S-76.
3. Bars indicated thus 19x5-#5 etc. indicates 19 lines of bars with 5 lengths per line.
4. Barrier widths are measured perpendicular from the edge of deck. All other dimensions are measured perpendicular to the alignments shown unless noted otherwise.
5. For light pole details, see S-71.
6. Actual dimensions may vary depending on modular joint manufacturer's design, typ.
7. Longitudinal bars on curved alignments shall be sprung into place to be concentric at the spacing noted.

MINIMUM BAR LAPS

Top Transverse #5 bar = 3'-1"
Bottom Transverse #5 bar = 3'-6"
Top Longitudinal #5 bar = 3'-0"
Bottom Longitudinal #5 bar = 3'-0"
Top Longitudinal #6 bar = 3'-7"

BOTTOM LONGITUDINAL BARS

- (G) Fan 6-#5 b106(E) bars at 1'-1" cts. max.
- (H) Fan 12-#5 b106(E) bars at 6½" cts. max.
- (I) Fan 14-#5 b106(E) bars at 6½" cts. max.
- (J) Fan 4x2-#5 b105(E) bars at 1'-1" cts. max.
- (K) Fan 5x3-#5 b105(E) bars at 1'-1" cts. max.
- (L) Fan 5x2-#5 b105(E) bars at 1'-1" cts. max.

BAR a1XX(E) TABLE

Bay	Bar	Size
LT Overhang	a120(E)	#5
1-2	a121(E)	#5
2-3	a121(E)	#5
3-6	a122(E)	#5
6-7	a123(E)	#5
7-8	a123(E)	#5
RT Overhang	a124(E)	#5

BAR x100(E) AND x101(E) TABLE

Bay	No.
LT Overhang	3
1-2	6
2-3	6
3-6	6
6-7	5
7-8	5
RT Overhang	3

Michael Baker INTERNATIONAL
200 W Adams Street Suite 1800 Chicago, IL 60606 P:+1 312.707.8770 FAX: 312.707.8804

USER NAME = DLamb	DESIGNED - TJN	REVISED -	
	CHECKED - DRH	REVISED -	
PLOT SCALE = 15.999936 ' / in.	DRAWN - TJN	REVISED -	
PLOT DATE = 6/6/2023	CHECKED - DRH	REVISED -	

STATE OF ILLINOIS
DEPARTMENT OF TRANSPORTATION

LT UNIT 1 – DECK PLAN 1
STRUCTURE NO. 090–0182

SHEET S-49 OF S-194 SHEETS

F.A.P. RTE.	SECTION	COUNTY	TOTAL SHEETS	SHEET NO.
VAR.	13 (HVB, HB-3) BR-1;R	TAZEWELL	1173	575

CONTRACT NO. 68C55

ILLINOIS | FED. AID PROJECT

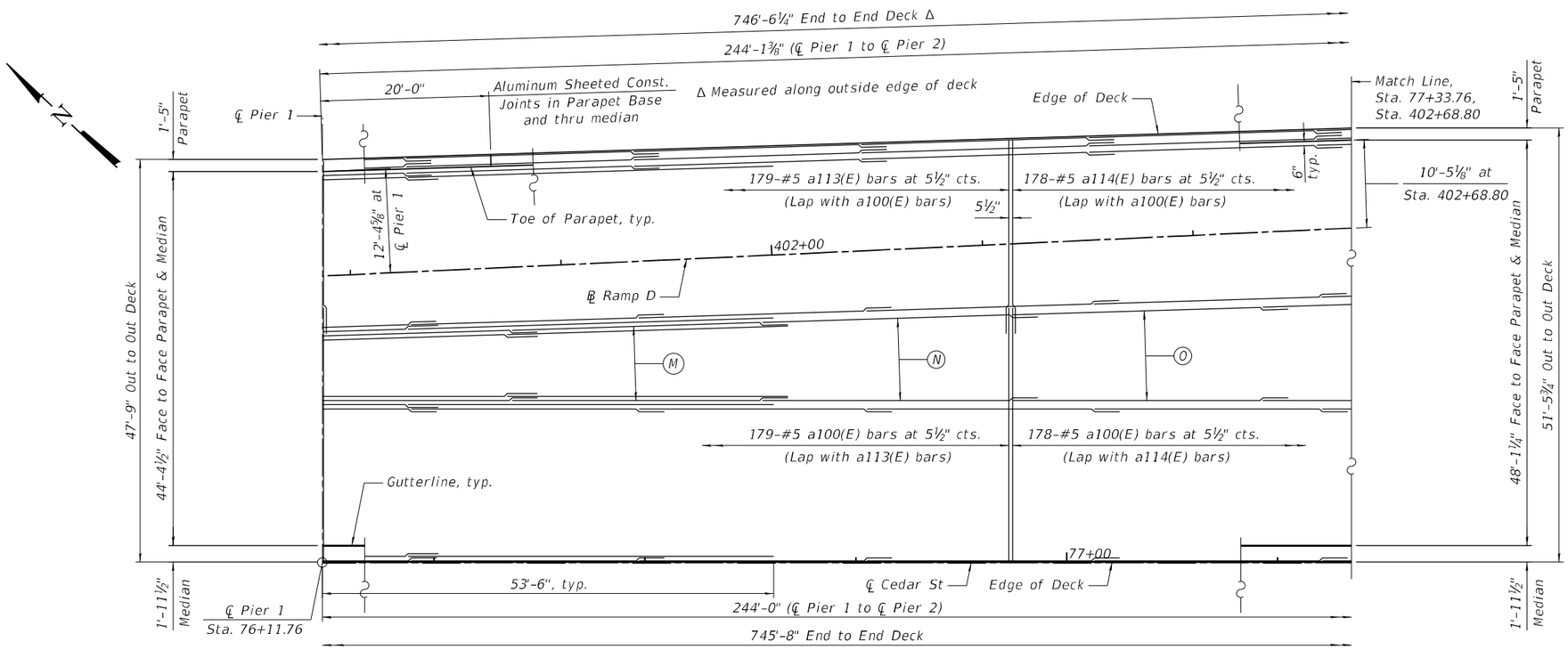

TOP PARTIAL PLAN - SPAN 2

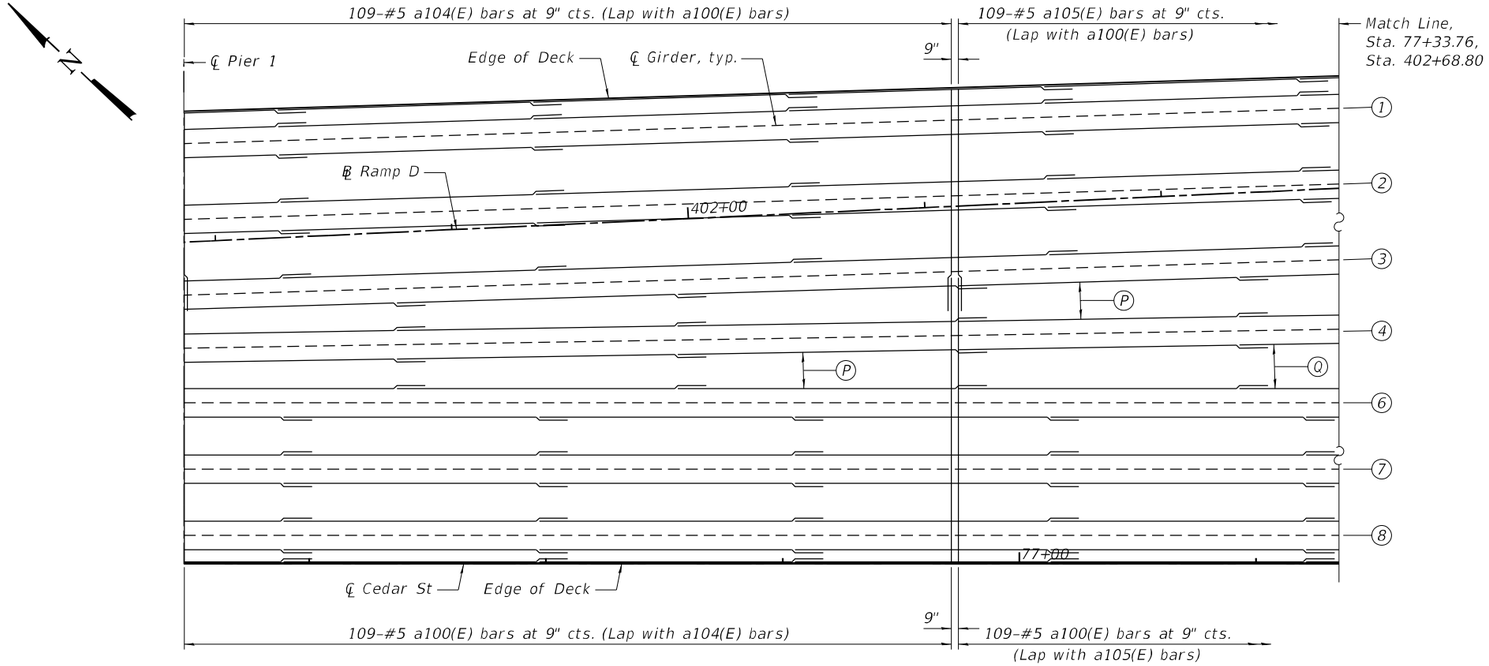

BOTTOM PARTIAL PLAN - SPAN 2

Only showing bottom reinforcement callouts, see Top Partial Plan for other callouts

TOP LONGITUDINAL BARS

(M) Fan 11-#5 b105(E) bars at 12" cts. max. alternate with 10-#6 b109(E) bars at 12" cts. max.

(N) Fan 12-#5 b105(E) bars at 12" cts. max.

(O) Fan 13x2-#5 b105(E) bars at 12" cts. max.

NOTE:

1. For typical deck notes and minimum bar laps, see S-49.

BOTTOM LONGITUDINAL BARS

(P) Fan 6x2-#5 b105(E) bars at 1'-1" cts. max.

(Q) Fan 12x2-#5 b105(E) bars at 6½" cts. max.

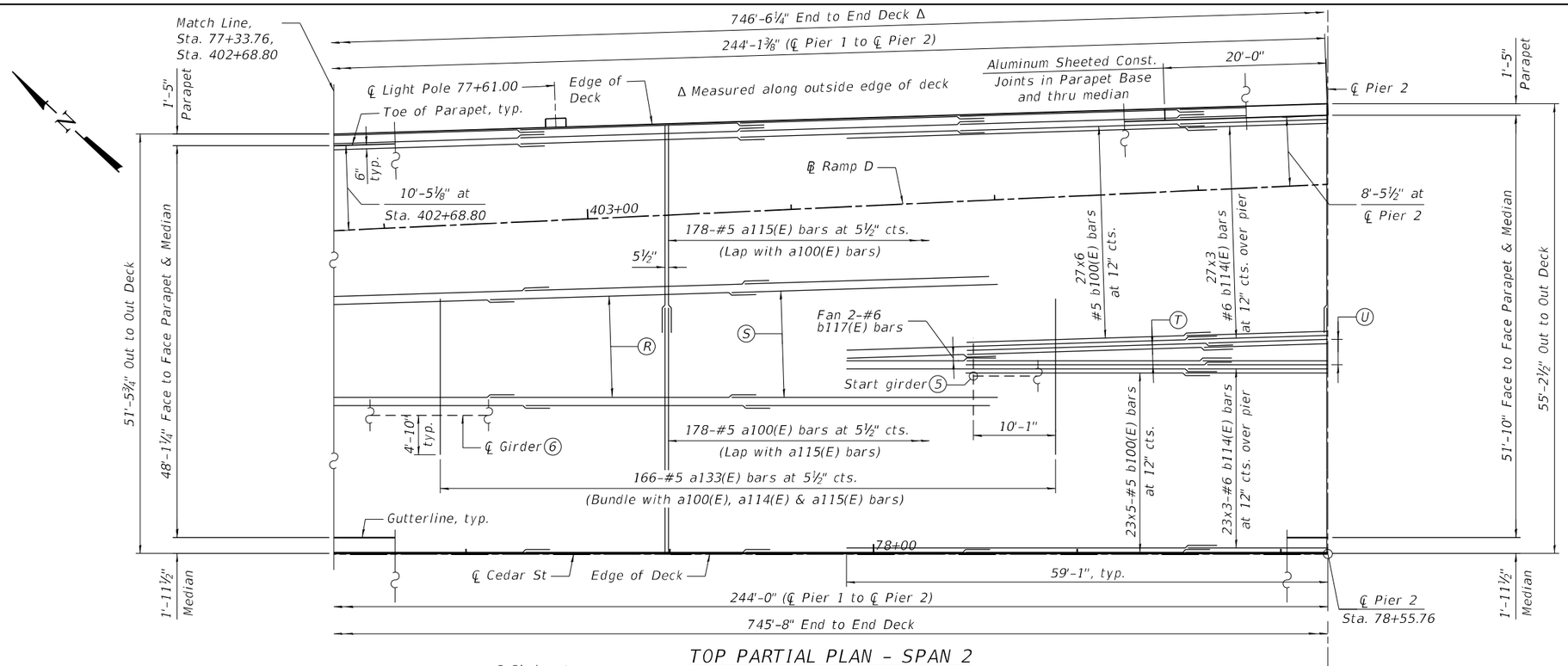

TOP PARTIAL PLAN - SPAN 2

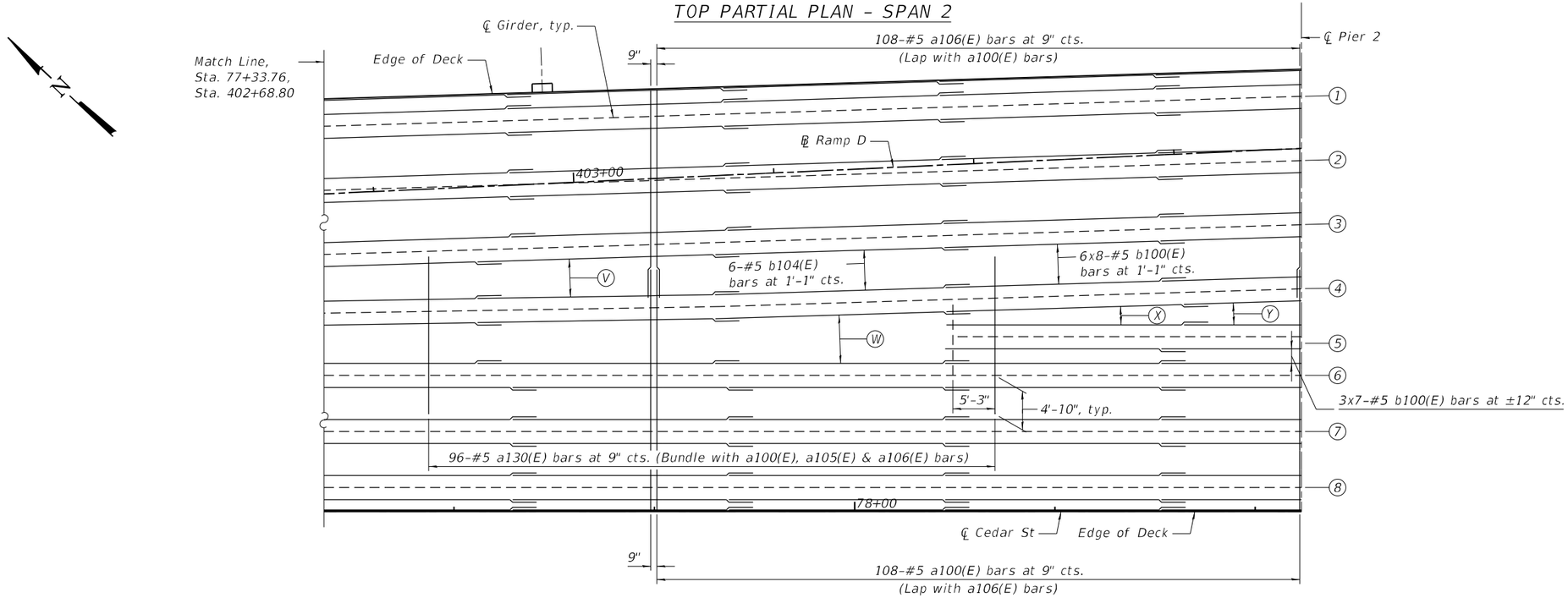

BOTTOM PARTIAL PLAN - SPAN 2

Only showing bottom reinforcement callouts, see Top Partial Plan for other callouts

TOP LONGITUDINAL BARS

(R) Fan 14-#5 b105(E) bars at 12" cts. max.

(S) Fan 15-#5 b105(E) bars at 12" cts. max. alternate with #6 b114(E) or b117(E) bars at 12" cts. max.

(T) Fan 4-#5 b105(E) bars at 12" cts. max. alternate with 3-#6 b109(E) bar

(U) Fan 5-#5 b105(E) bars at 12" cts. max. alternate with 4-#6 b109(E) bars

NOTE:

1. For typical deck notes and minimum bar laps, see S-49.

BOTTOM LONGITUDINAL BARS

(V) Fan 6-#5 b105(E) bars at 1'-1" cts. max.

(W) Fan 14-#5 b104(E) bars at 6½" cts. max.

(X) Fan 4-#5 b105(E) bars at 1'-1" cts. max.

(Y) Fan 5-#5 b105(E) bars at 1'-1" cts. max.

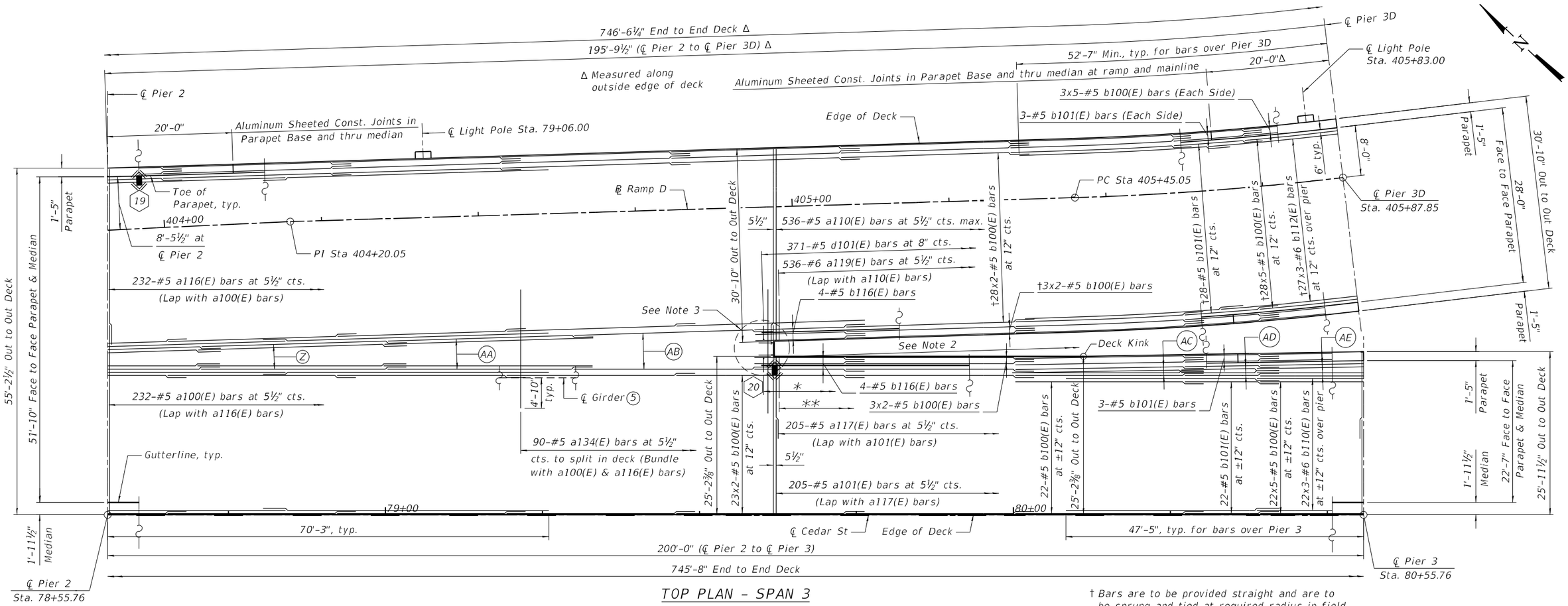

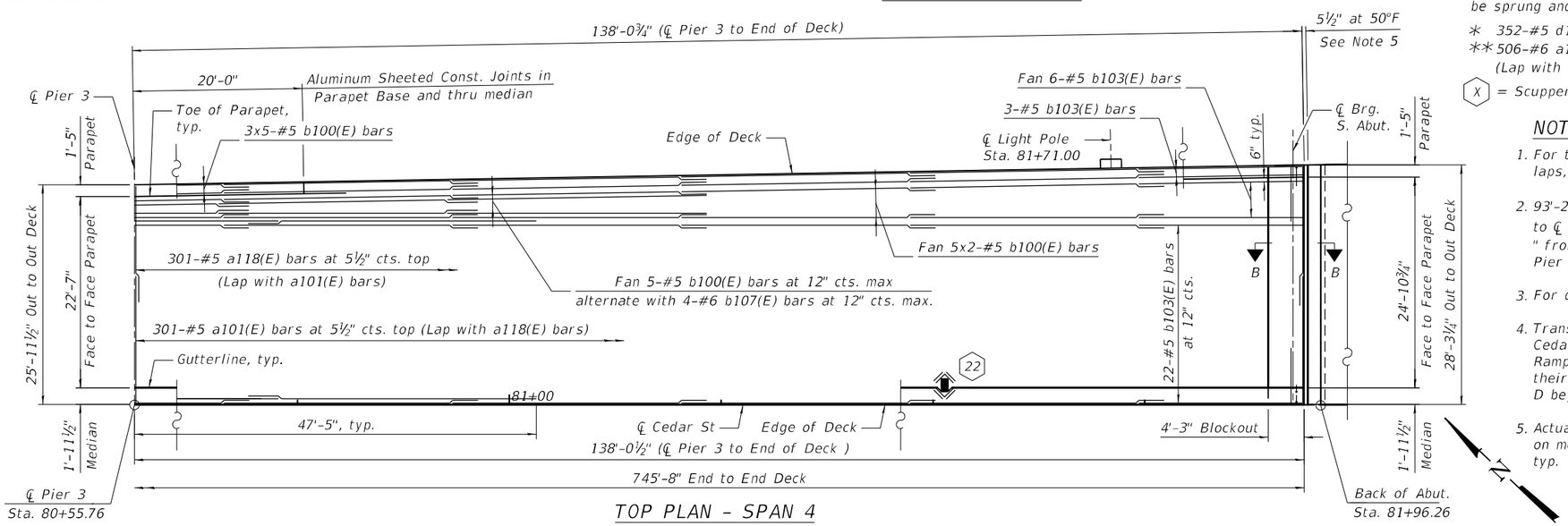

† Bars are to be provided straight and are to be sprung and tied at required radius in field.

∗ 352-#5 d101(E) bars at 8" cts.

∗∗ 506-#6 a119(E) bars at 5½" cts. top (Lap with a117(E) or a118(E) bars)

(X) = Scupper I.D.

NOTES:

1. For typical deck notes and minimum bar laps, see S-49.
2. 93'-2⅞" from edge of deck at Attenuator to ℄ Pier 3D along edge of deck. 93'-9⅝" from edge of deck at Attenuator to ℄ Pier 3 along edge of deck.
3. For details at attenuator, see S-73.
4. Transverse bars are placed normal to ℄ Cedar St. Adjust the orientation of the Ramp D transverse bars by transitioning their orientation to be normal to ℄ Ramp D beyond the ramp and mainline split.
5. Actual dimensions may vary depending on modular joint manufacturer's design, typ.

TOP LONGITUDINAL BARS

(Z) Fan 6-#5 b105(E) bars at 12" cts. max. alternate with 5-#6 b109(E) bars at 12" cts. max.

(AA) Fan 7-#5 b105(E) bars at 12" cts. max. alternate with 6-#6 b109(E) bars at 12" cts. max.

(AB) Fan 8-#5 b105(E) bars at 12" cts. max.

(AC) Fan 3-#5 b100(E) bars at 12" cts. max. alternate with 2-#6 b107(E) bars at 12" cts. max.

(AD) Fan 3-#5 b101(E) bars at 12" cts. max. alternate with 2-#6 b108(E) bars at 12" cts. max.

(AE) Fan 4x2-#5 b100(E) bars at 12" cts. max. alt. with 3x2-#6 b107(E) bars at 12" cts. max.

Michael Baker INTERNATIONAL
200 W Adams Street Suite 1800 Chicago, IL 60606 P:+1 312.707.8770 FAX: 312.707.8804

USER NAME = DLamb	DESIGNED - TJN	REVISED -	
	CHECKED - DRH	REVISED -	
PLOT SCALE = 15.999936 ' / in.	DRAWN - TJN	REVISED -	
PLOT DATE = 6/6/2023	CHECKED - DRH	REVISED -	

STATE OF ILLINOIS
DEPARTMENT OF TRANSPORTATION

LT UNIT 1 – DECK PLAN 4
STRUCTURE NO. 090–0182

SHEET S-52 OF S-194 SHEETS

F.A.P. RTE.	SECTION	COUNTY	TOTAL SHEETS	SHEET NO.
VAR.	13 (HVB, HB-3) BR-1;R	TAZEWELL	1173	578
		CONTRACT NO. 68C55		
		ILLINOIS FED. AID PROJECT		

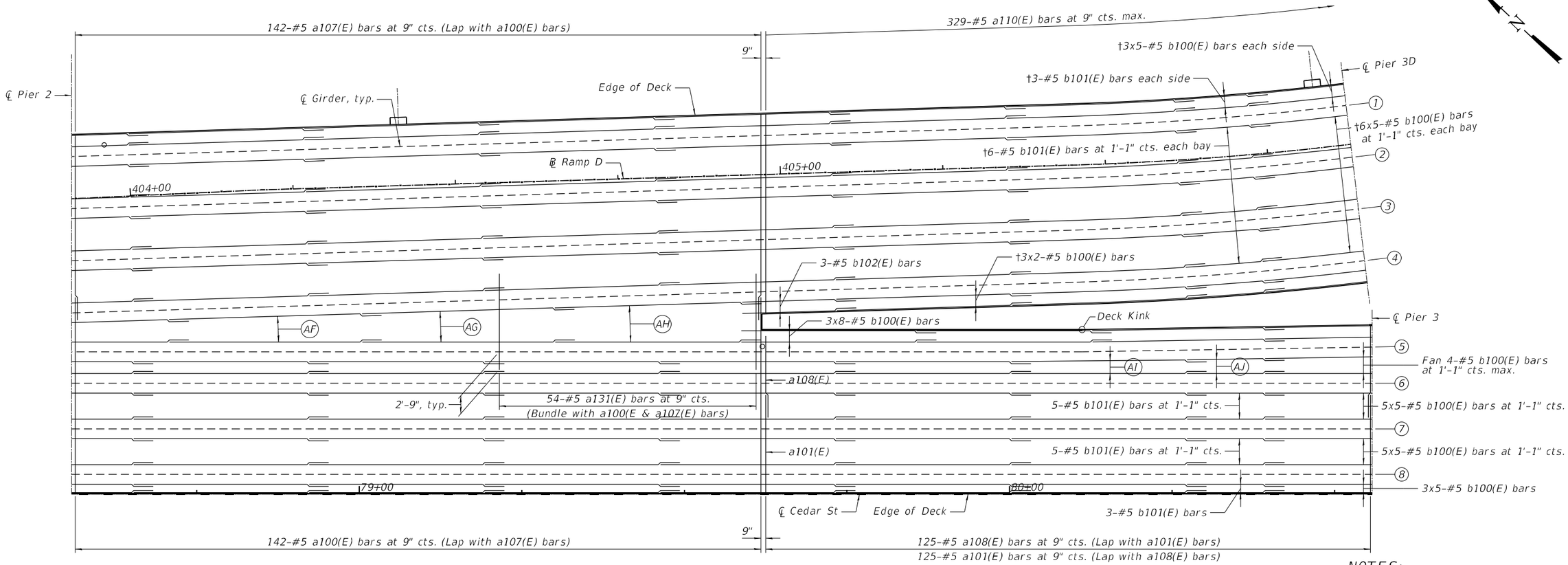

BOTTOM PLAN - SPAN 3

Only showing bottom reinforcement callouts, see Top Plan - Span 3 on S-52 for other callouts

† Bars are to be provided straight and are to be sprung and tied at required radius in field.

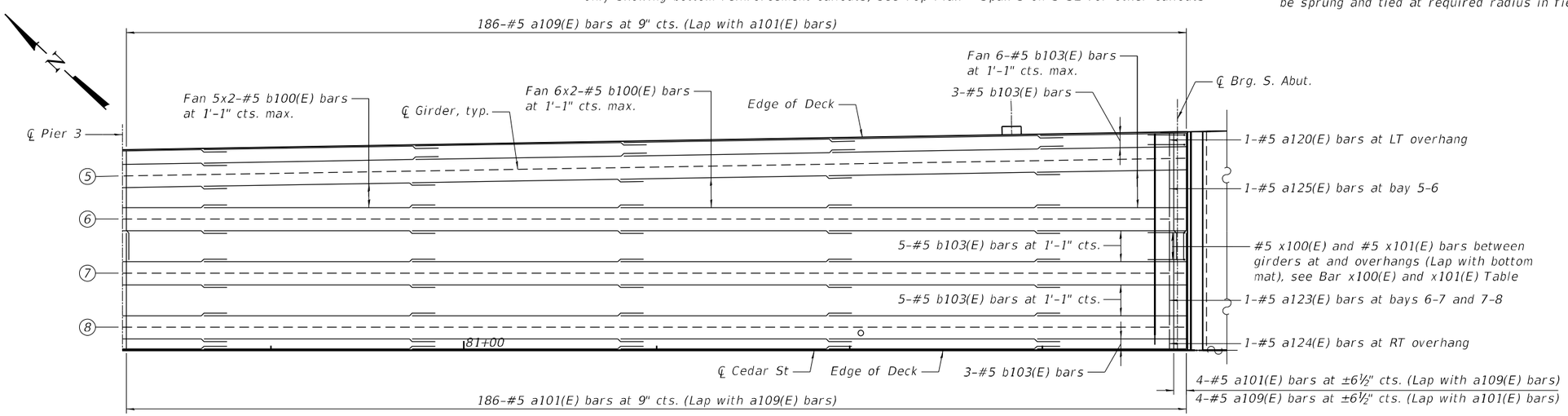

BOTTOM PLAN - SPAN 4

Only showing bottom reinforcement callouts, see Top Plan - Span 4 on S-52 for other callouts

NOTES:

1. For typical deck notes and minimum bar laps, see S-49.
2. For notes related to Spans 3 and 4, see S-52.

BOTTOM LONGITUDINAL BARS

(AF) Fan 6-#5 b105(E) bars at 1'-1" cts. max.

(AG) Fan 12-#5 b105(E) bars at 6½" cts. max.

(AH) Fan 14-#5 b105(E) bars at 6½" cts. max.

(AI) Fan 4-#5 b100(E) bars at 1'-1" cts. max.

(AJ) Fan 4-#5 b101(E) bars at 1'-1" cts. max.

BAR x100(E) AND x101(E) TABLE

Bay	No.
LT Overhang	3
5-6	6
6-7	5
7-8	5
RT Overhang	3

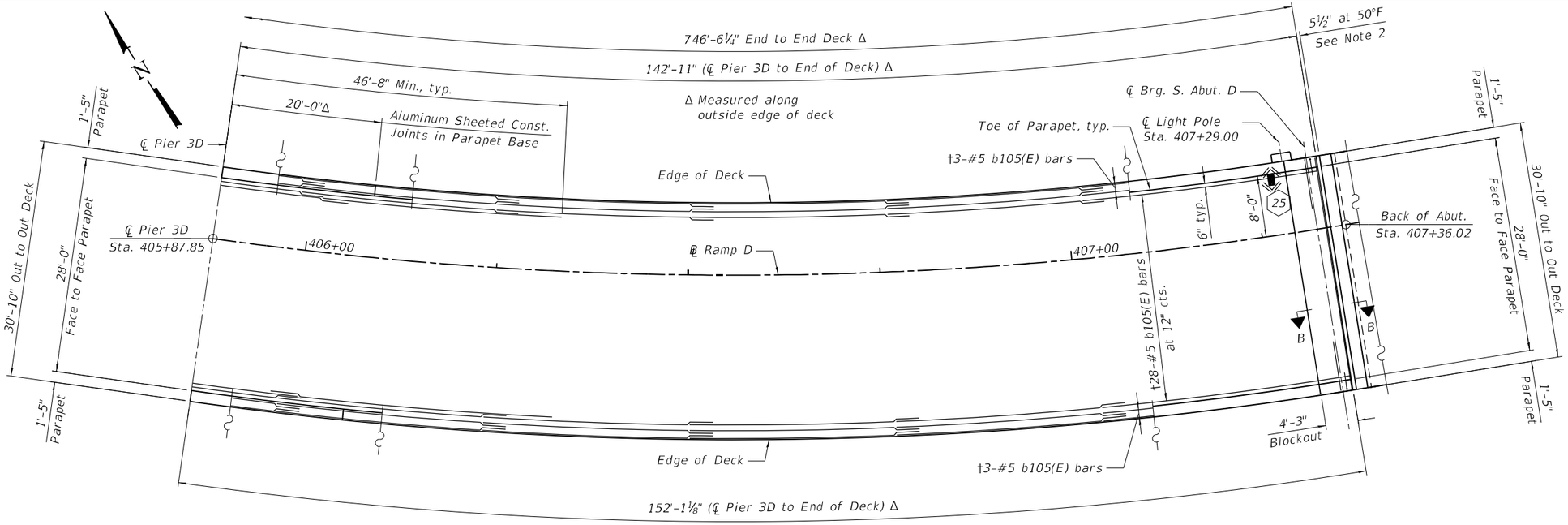

TOP PLAN - SPAN 4D

†Bars are to be provided straight and are to be strung and tied at required radius in field.

(X) = Scupper I.D.

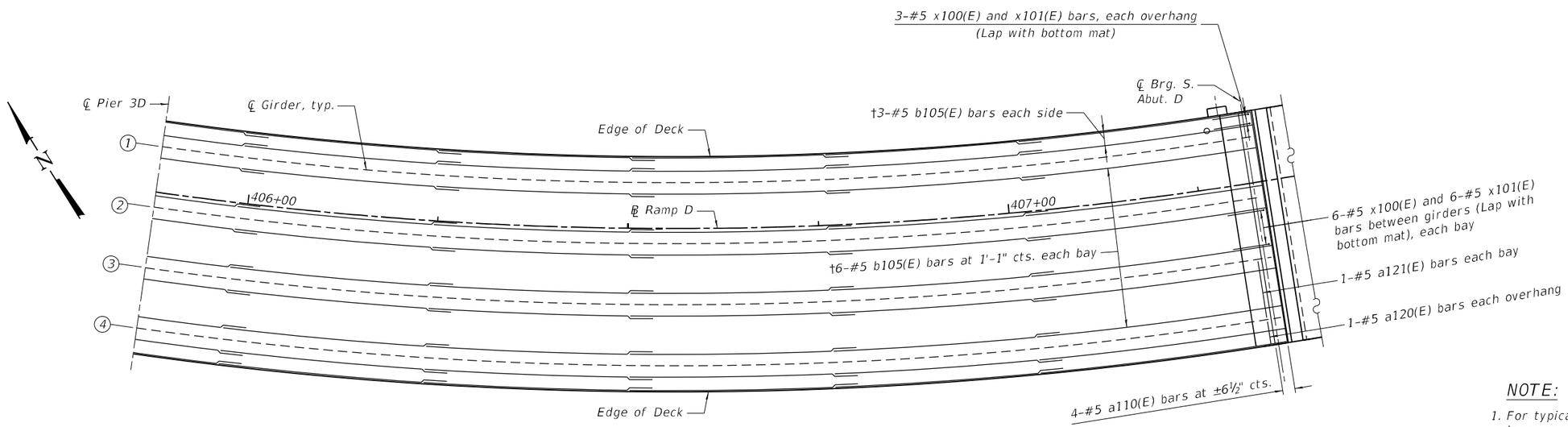

BOTTOM PLAN - SPAN 4D

Only showing bottom reinforcment callouts, see Top Plan for other callouts

†Bars are to be provided straight and are to be strung and tied at required radius in field.

NOTE:

1. For typical deck notes and minimum bar laps, see S-49.
2. Actual dimensions may vary depending on modular joint manufacturer's design, typ.

MODEL: Default
FILE NAME: pw:\\mis-uscov.bentley.commbs-pw:093Documents\Chicago IL\01 Projects\179740 IDOT Ceda-SiExt PRH5.0 CADD\CAD Sheets\0900182-68C55-S54-Deck6h.6_LT.dgn

Michael Baker INTERNATIONAL 200 W Adams Street Suite 1800 Chicago, IL 60606 P:+1 312.707.8770 FAX: 312.707.8804	USER NAME = DLamb	DESIGNED - TJN	REVISED -	STATE OF ILLINOIS DEPARTMENT OF TRANSPORTATION	LT UNIT 1 – DECK PLAN 6 STRUCTURE NO. 090–0182
		CHECKED - DRH	REVISED -		
	PLOT SCALE = 15.999936 ' / in.	DRAWN - TJN	REVISED -		
	PLOT DATE = 6/6/2023	CHECKED - DRH	REVISED -		SHEET S-54 OF S-194 SHEETS

F.A.P. RTE.	SECTION	COUNTY	TOTAL SHEETS	SHEET NO.
VAR.	13 (HVB, HB-3) BR-1;R	TAZEWELL	1173	580
		CONTRACT NO. 68C55		
	ILLINOIS	FED. AID PROJECT		

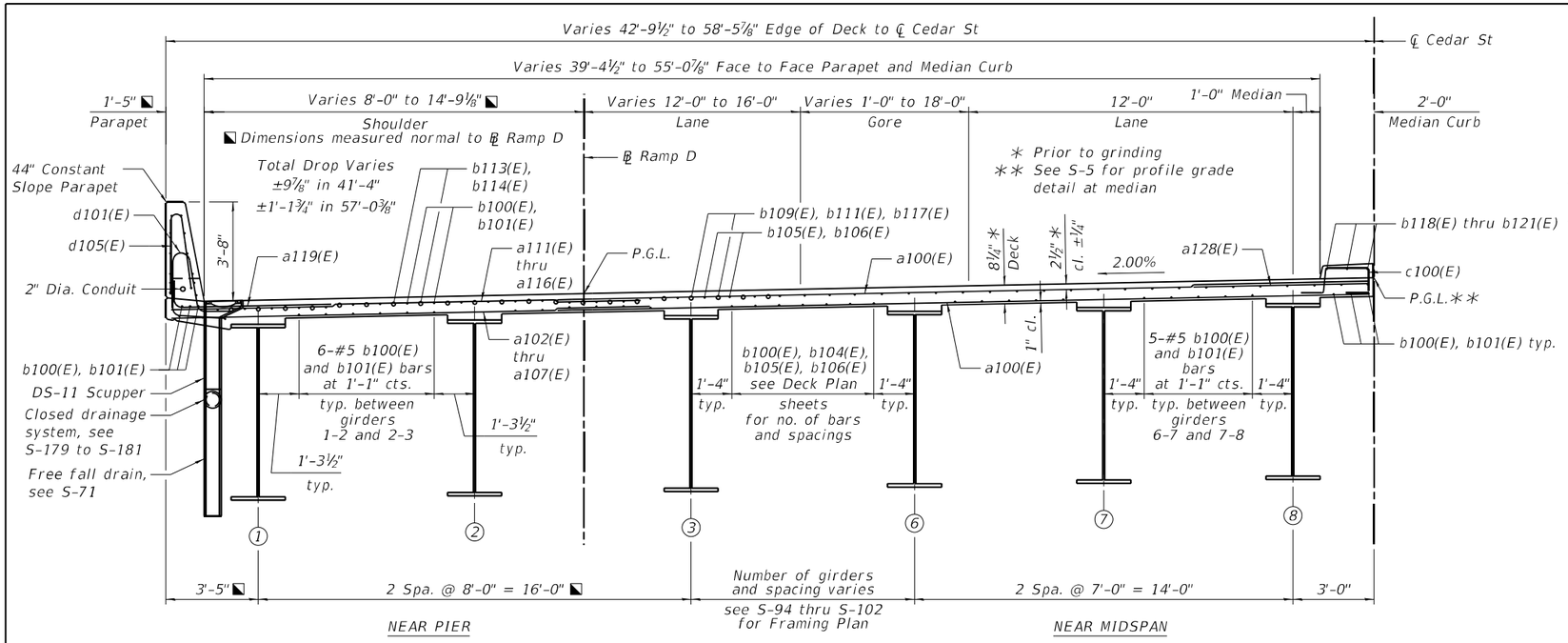

DECK CROSS SECTION - LT UNIT 1 - SPANS 1 THRU 3 BEFORE SPLIT

(Looking Upstation)
Sta. 74+48.14 to 79+61.93 along ℄ Cedar St

NOTES:

1. See S-75 for Bill of Material.
2. For median curb details, see S-72.
3. Barrier widths are measured perpendicular from the edge of deck. All other dimensions are measured perpendicular to the alignments shown unless noted otherwise.
4. Total drop dimensions are from edge of deck at median to toe of parapet.
5. A negative cross-slope indicates a slope in the opposite direction from what is shown.

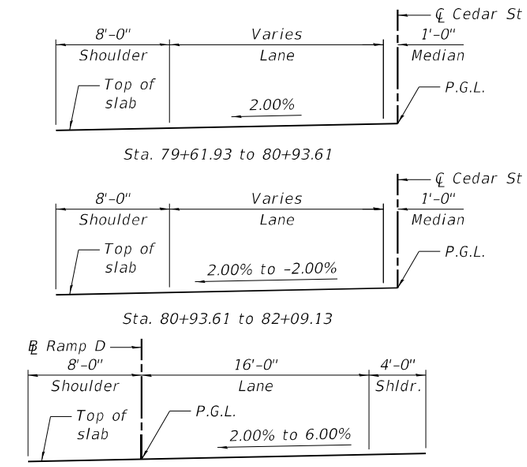

DECK CROSS SLOPE DETAILS

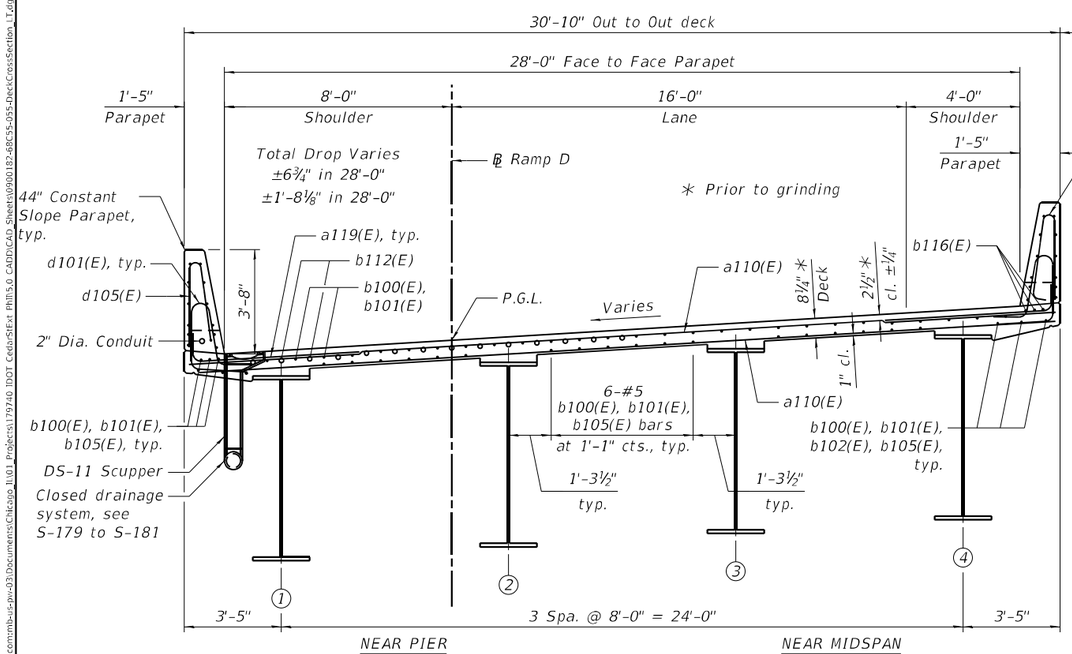

DECK CROSS SECTION - LT UNIT 1 - RAMP D

(Looking Upstation)
Sta. 404+97.21 to 407+33.57 along ⅊ Ramp D

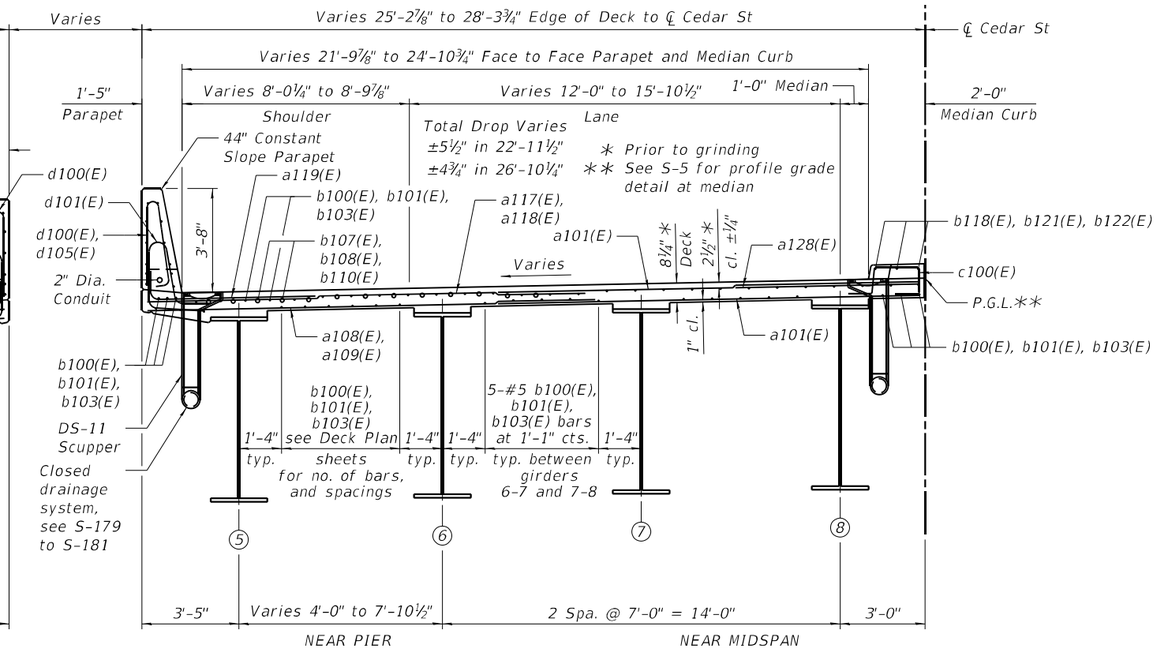

DECK CROSS SECTION - LT UNIT 1 - SPANS 3 THRU 4 AFTER SPLIT

(Looking Upstation)
Sta. 79+61.93 to 81+93.80 along ℄ Cedar St

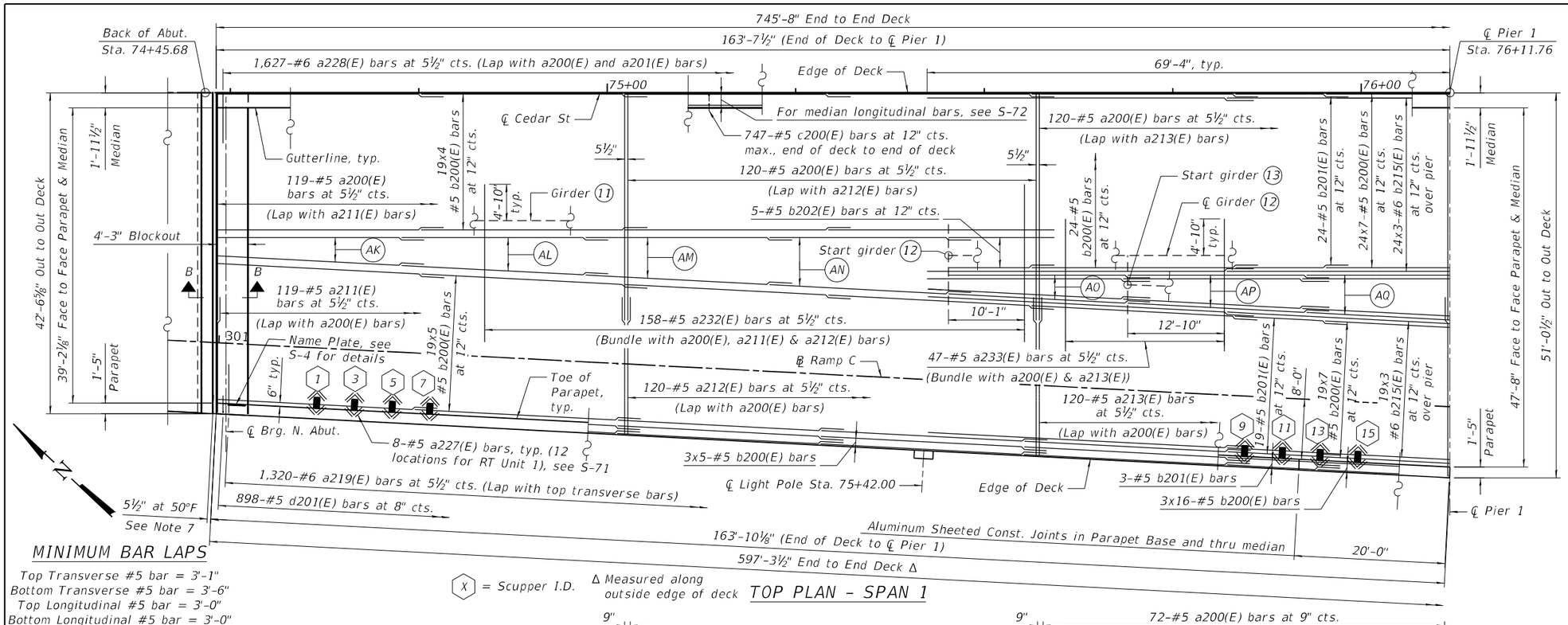

TOP PLAN - SPAN 1

Δ Measured along outside edge of deck

(X) = Scupper I.D.

MINIMUM BAR LAPS

Top Transverse #5 bar = 3'-1"
Bottom Transverse #5 bar = 3'-6"
Top Longitudinal #5 bar = 3'-0"
Bottom Longitudinal #5 bar = 3'-0"
Top Longitudinal #6 bar = 3'-7"

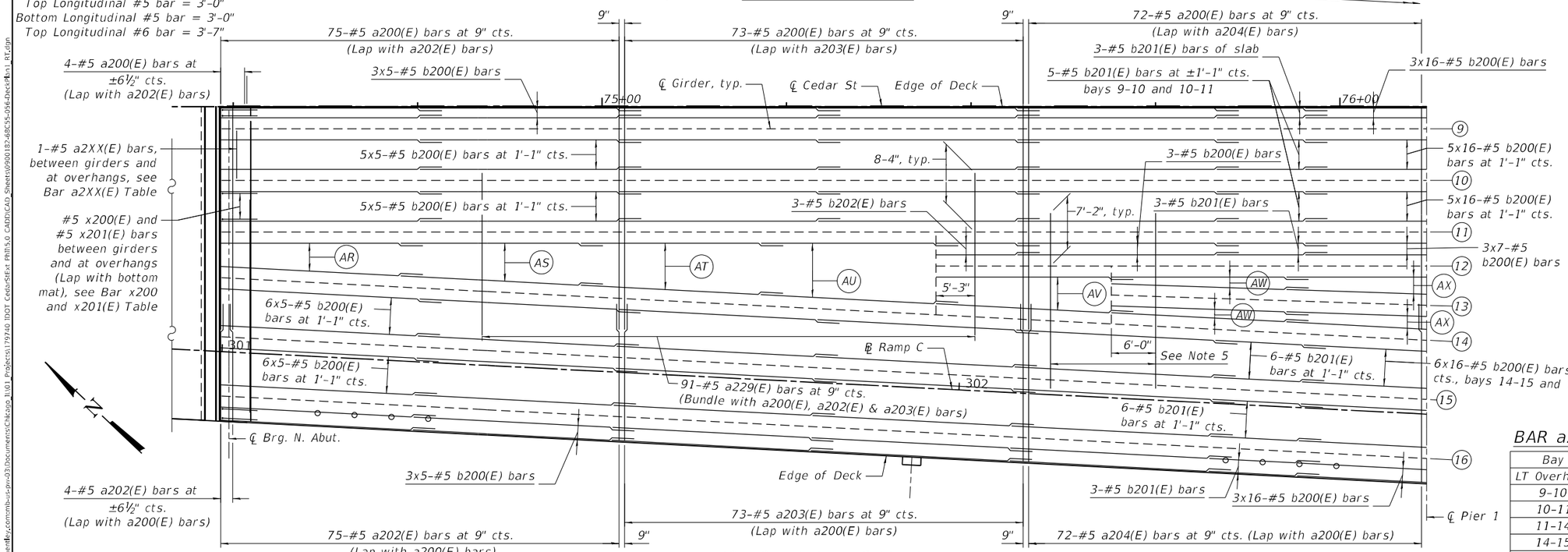

BOTTOM PLAN - SPAN 1

Only showing bottom reinforcement callouts, see Top Plan for other callouts

TOP LONGITUDINAL BARS

- (AK) Fan 5-#5 b206(E) bars at 12" cts. max.
- (AL) Fan 6-#5 b206(E) bars at 12" cts. max.
- (AM) Fan 8-#5 b206(E) bars at 12" cts. max.
- (AN) Fan 16-#5 b205(E) bars at 6" cts. max.
- (AO) Fan 5-#5 b205(E) bars at 12" cts. max. alternate with 4-#6 b218(E) bars at 12" cts. max.
- (AP) Fan 6-#5 b205(E) bars at 12" cts. max. alternate with 5-#6 b211(E) bars at 12" cts. max.
- (AQ) Fan 8-#5 b207(E) bars at 12" cts. max. alternate with 7-#6 b214(E) bars at 12" cts. max.

NOTES:

1. For superstructure details, Section B-B, and Section C-C see S-72.
2. For Bar Bends and Bill of Material, see S-75 and S-76.
3. Bars indicated thus 19x5-#5 etc. indicates 19 lines of bars with 5 lengths per line.
4. Barrier widths are measured perpendicular from the edge of deck. All other dimensions are measured perpendicular to the alignments shown unless noted otherwise.
5. 20-#5 a230(E) bars at 9" cts., (Bundle with a200(E) & a204(E) bars)
6. For light pole details, see S-71.
7. Actual dimensions may vary depending on modular joint manufacturer's design, typ.
8. Longitudinal bars on curved alignments shall be sprung into place to be concentric at the spacing noted.

BOTTOM LONGITUDINAL BARS

- (AR) Fan 6-#5 b206(E) bars at 1'-1" cts. max.
- (AS) Fan 13-#5 b206(E) bars at 6½" cts. max.
- (AT) Fan 14-#5 b206(E) bars at 6½" cts. max.
- (AU) Fan 17-#5 b205(E) bars at 6½" cts. max.
- (AV) Fan 11-#5 b205(E) bars at 6½" cts. max.
- (AW) Fan 3-#5 b205(E) bars at 1'-1" cts. max.
- (AX) Fan 4-#5 b207(E) bars at 1'-1" cts. max.

BAR a2XX(E) TABLE

Bay	Bar	Size
LT Overhang	a224(E)	#5
9-10	a223(E)	#5
10-11	a223(E)	#5
11-14	a222(E)	#5
14-15	a221(E)	#5
15-16	a221(E)	#5
RT Overhang	a220(E)	#5

BAR x200(E) AND x201(E) TABLE

Bay	No.
LT Overhang	3
9-10	5
10-11	5
11-14	5
14-15	6
15-16	6
RT Overhang	3

Michael Baker INTERNATIONAL
200 W Adams Street Suite 1800 Chicago, IL 60606
PH: 312.707.8770 FAX: 312.707.8804

USER NAME = DLamb	DESIGNED - TJN	REVISED -	
	CHECKED - DRH	REVISED -	
PLOT SCALE = 15.999936 ' / in.	DRAWN - TJN	REVISED -	
PLOT DATE = 6/6/2023	CHECKED - DRH	REVISED -	

STATE OF ILLINOIS
DEPARTMENT OF TRANSPORTATION

RT UNIT 1 - DECK PLAN 1
STRUCTURE NO. 090-0182

SHEET S-56 OF S-194 SHEETS

F.A.P. RTE.	SECTION	COUNTY	TOTAL SHEETS	SHEET NO.
VAR.	13 (HVB, HB-3) BR-1;R	TAZEWELL	1173	582
		CONTRACT NO. 68C55		
		ILLINOIS FED. AID PROJECT		

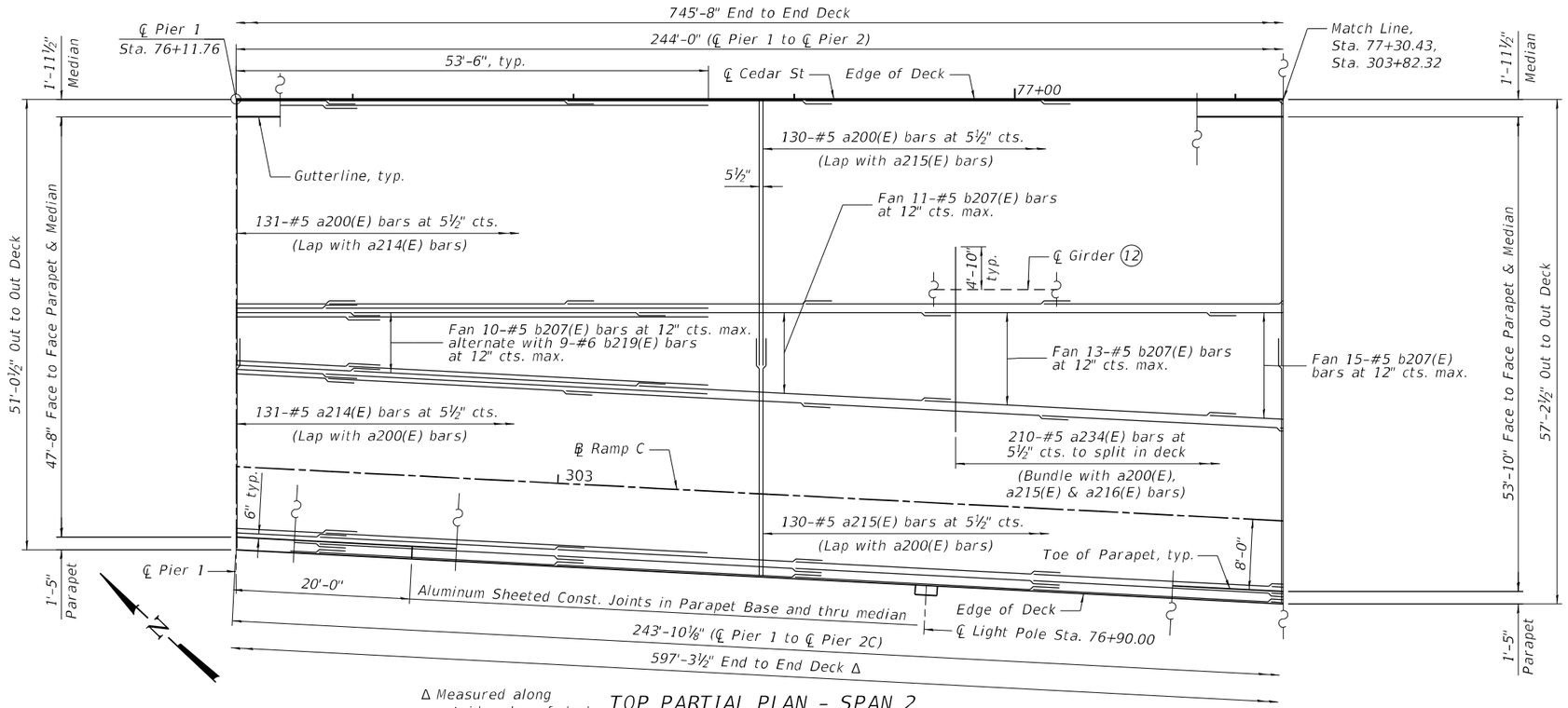

Δ Measured along outside edge of deck

TOP PARTIAL PLAN - SPAN 2

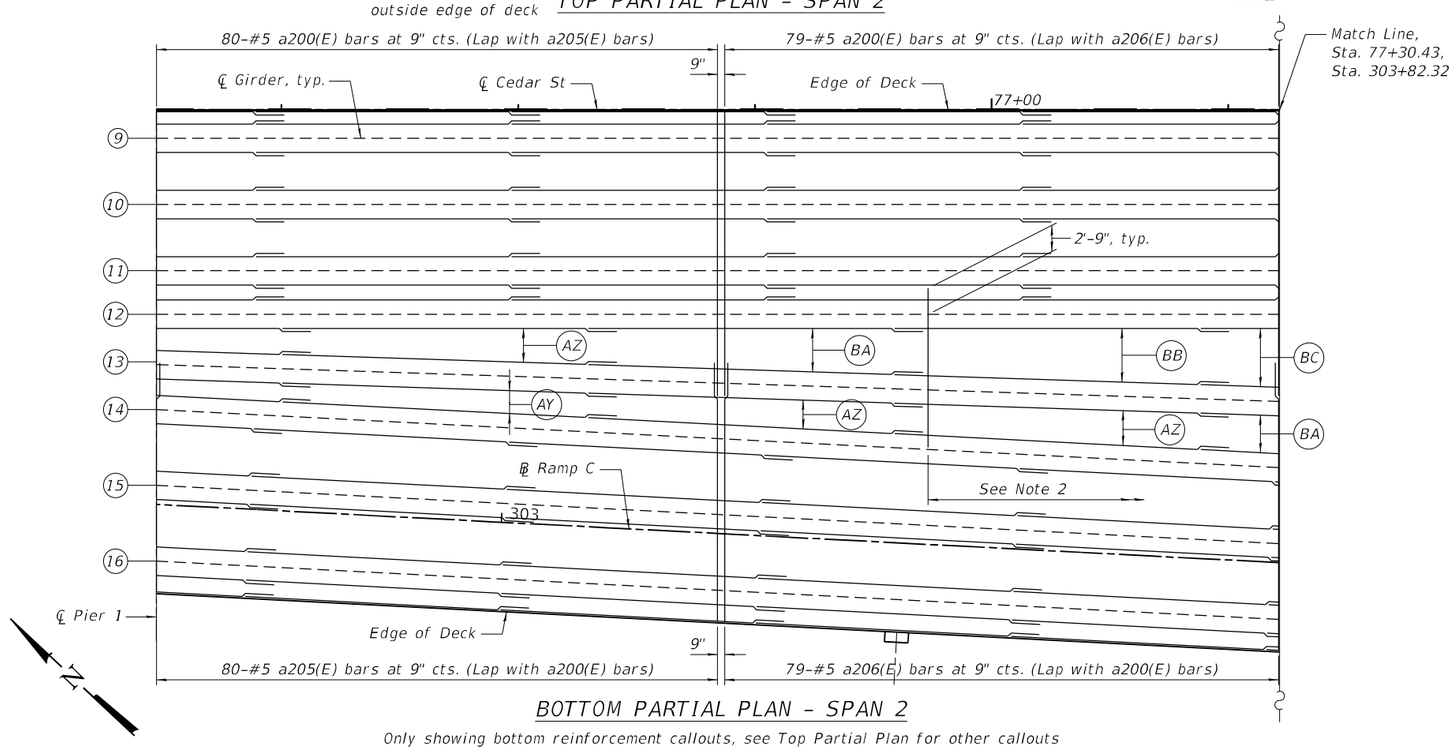

BOTTOM PARTIAL PLAN - SPAN 2

Only showing bottom reinforcement callouts, see Top Partial Plan for other callouts

NOTE:

1. For typical deck notes and minimum bar laps, see S-56.
2. 129-#5 a231(E) bars at 9" cts. to split in deck, (Bundle with a200(E), a206(E) & a207(E) bars)

BOTTOM LONGITUDINAL BARS

- (AY) Fan 4-#5 b207(E) bars at 1'-1" cts. max.
- (AZ) Fan 5-#5 b207(E) bars at 1'-1" cts. max.
- (BA) Fan 6-#5 b207(E) bars at 1'-1" cts. max.
- (BB) Fan 7-#5 b207(E) bars at 1'-1" cts. max.
- (BC) Fan 8-#5 b207(E) bars at 1'-1" cts. max.

Michael Baker INTERNATIONAL
200 W Adams Street
Suite 1800
Chicago, IL 60606
PH: 312.707.8772
FAX: 312.707.8804

USER NAME = DLamb	DESIGNED - TJN	REVISED -
	CHECKED - DRH	REVISED -
PLOT SCALE = 15.999936 ' / in.	DRAWN - TJN	REVISED -
PLOT DATE = 8/6/2023	CHECKED - DRH	REVISED -

STATE OF ILLINOIS
DEPARTMENT OF TRANSPORTATION

RT UNIT 1 – DECK PLAN 2
STRUCTURE NO. 090–0182

SHEET S-57 OF S-194 SHEETS

F.A.P. RTE.	SECTION	COUNTY	TOTAL SHEETS	SHEET NO.
VAR.	13 (HVB, HB-3) BR-1;R	TAZEWELL	1173	583
		CONTRACT NO. 68C55		
		ILLINOIS FED. AID PROJECT		

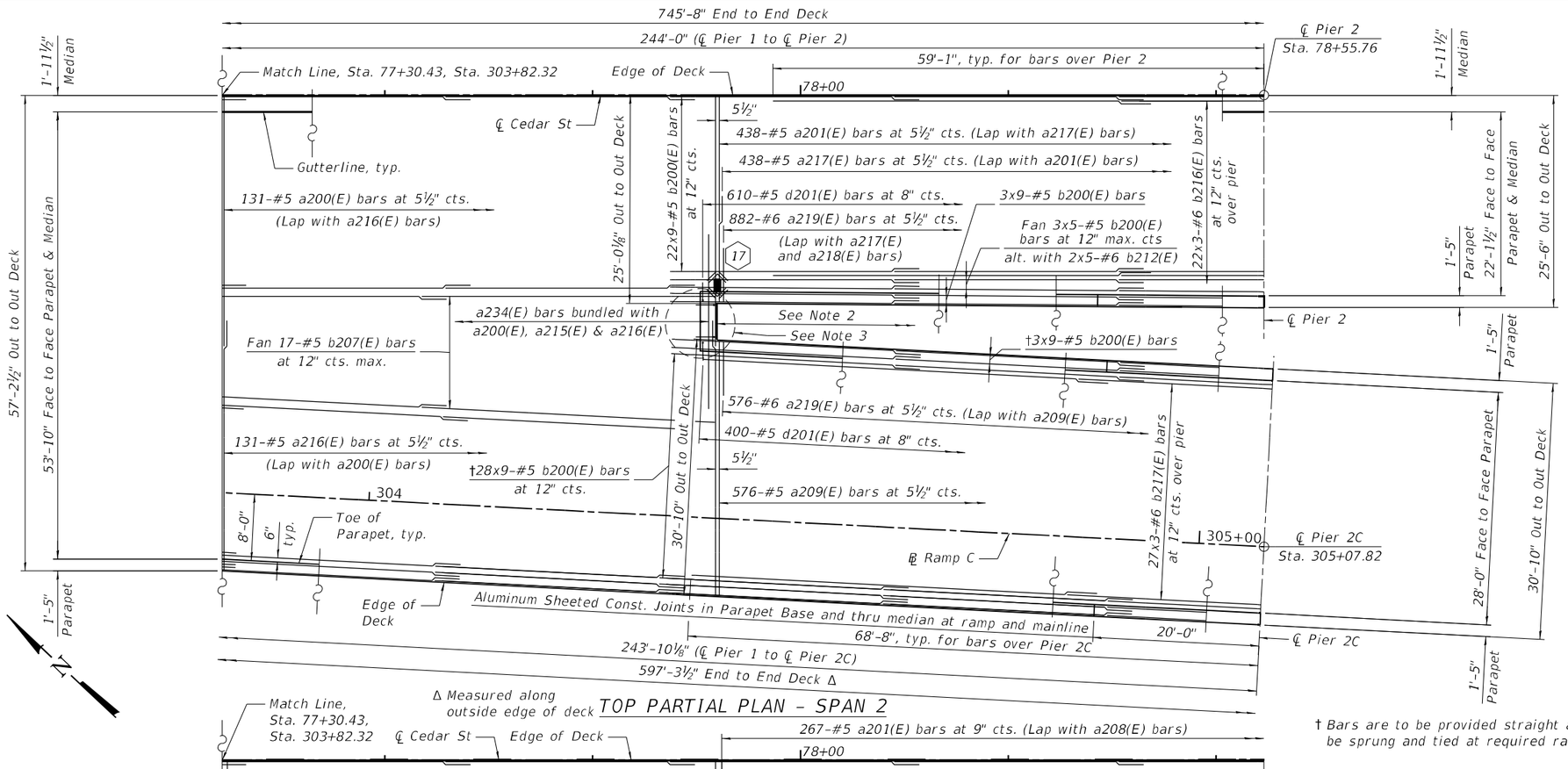

(X) = Scupper I.D.

NOTES:

1. For typical deck notes and minimum bar laps, see S-56.
2. 65'-9¾" from edge of deck at Attenuator to ℄ Pier 2 along edge of deck. 67'-0⅛" from edge of deck at Attenuator to ℄ Pier 2C along edge of deck.
3. For details at attenuator, see S-73.
4. Transverse bars are placed normal to ℄ Cedar St. Adjust the orientation of the Ramp C transverse bars by transitioning their orientation to be normal to ℄ Ramp C beyond the ramp and mainline split.

† Bars are to be provided straight and are to be sprung and tied at required radius in field.

† Bars are to be provided straight and are to be sprung and tied at required radius in field.

MODEL: Default
FILE NAME: pw:\\mbi-ipw.bentley.com:mbi-ipw-03\Documents\Chicago_IL\01 Projects\179740 IDOT Cedar SE\+ PhII\5.0 CADD\CAD Sheet\0900182-68C55-058-Deck-Plan3-RT.dgn

Michael Baker INTERNATIONAL
200 W Adams Street
Suite 1850
Chicago, IL 60606
PH: 312.707.8770
FAX: 312.707.8804

USER NAME = DLamb	DESIGNED - TJN	REVISED -	
	CHECKED - DRH	REVISED -	
PLOT SCALE = 15.999936 ' / in.	DRAWN - TJN	REVISED -	
PLOT DATE = 6/6/2023	CHECKED - DRH	REVISED -	

STATE OF ILLINOIS
DEPARTMENT OF TRANSPORTATION

RT UNIT 1 – DECK PLAN 3
STRUCTURE NO. 090–0182

SHEET S-58 OF S-194 SHEETS

F.A.P. RTE.	SECTION	COUNTY	TOTAL SHEETS	SHEET NO.
VAR.	13 (HVB, HB-3) BR-1;R	TAZEWELL	1173	584
		CONTRACT NO. 68C55		
	ILLINOIS	FED. AID PROJECT		

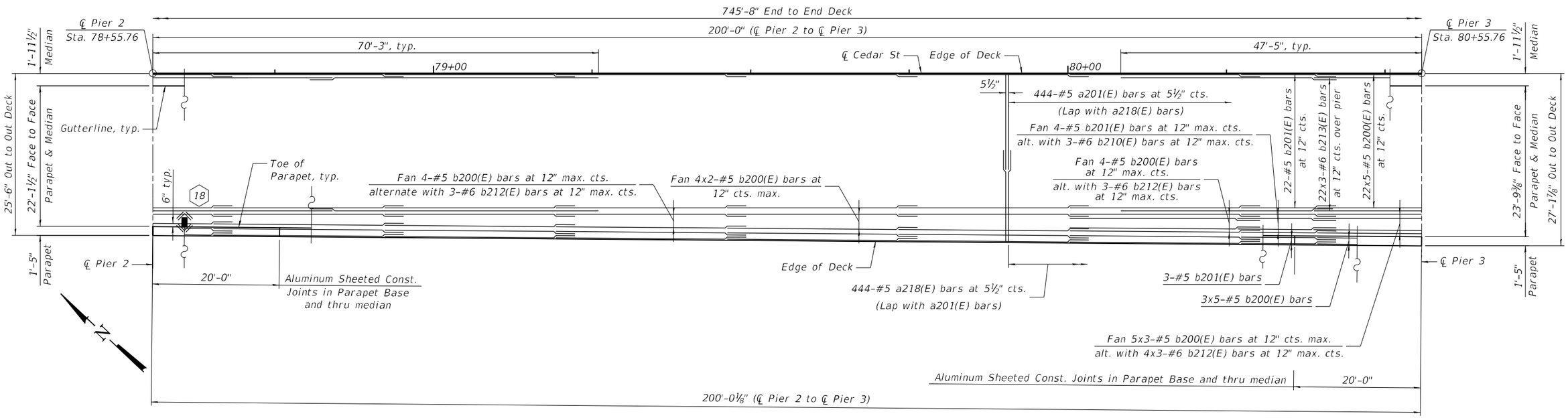

TOP PLAN - SPAN 3

(X) = Scupper I.D.

NOTE:

For typical deck notes and minimum bar laps, see S-56.

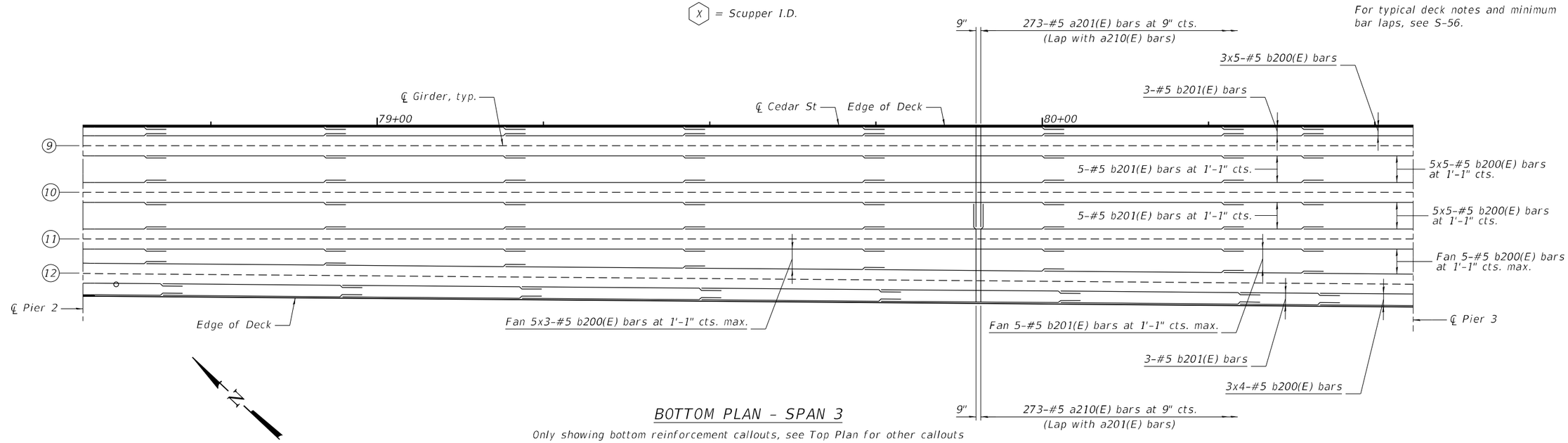

BOTTOM PLAN - SPAN 3

Only showing bottom reinforcement callouts, see Top Plan for other callouts

MODEL: Default
FILE NAME: pw:\\mbakerintl.com\mbi-us-cov_bentley.comms-us-pw-03\Documents\Chicago IL\01 Projects\179740 IDOT Ceda/SFx1 PhII\5.0 CADD\CAD Sheets\0900182-68C55-059-DeckPlan4 RT.dgn

Michael Baker INTERNATIONAL
200 W Adams Street
Suite 1800
Chicago, IL 60606
P:+1 312.707.8770
FAX: 312.707.8804

USER NAME = DLamb	DESIGNED - TJN	REVISED -	
	CHECKED - DRH	REVISED -	
PLOT SCALE = 15.999936 ' / in.	DRAWN - TJN	REVISED -	
PLOT DATE = 6/6/2023	CHECKED - DRH	REVISED -	

STATE OF ILLINOIS
DEPARTMENT OF TRANSPORTATION

RT UNIT 1 – DECK PLAN 4
STRUCTURE NO. 090–0182

SHEET S-59 OF S-194 SHEETS

F.A.P. RTE.	SECTION	COUNTY	TOTAL SHEETS	SHEET NO.
VAR.	13 (HVB, HB-3) BR-1;R	TAZEWELL	1173	585
		CONTRACT NO. 68C55		
	ILLINOIS	FED. AID PROJECT		

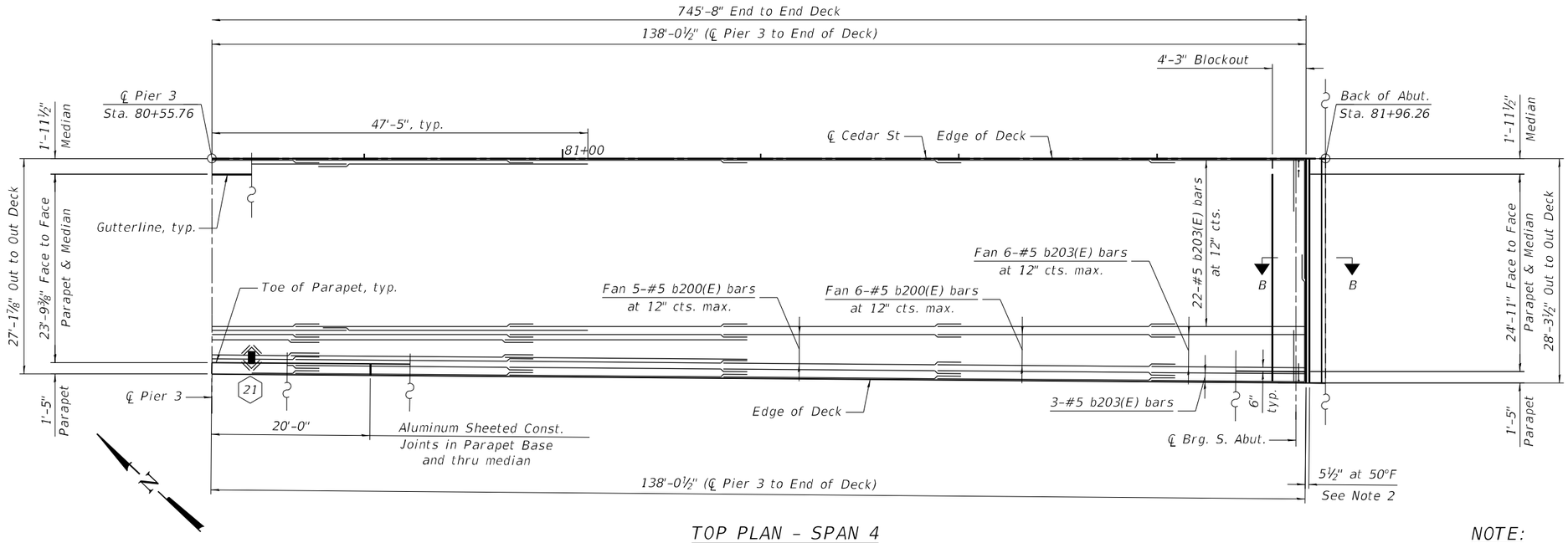

TOP PLAN - SPAN 4

(X) = Scupper I.D.

NOTE:

1. For typical deck notes and minimum bar laps, see S-56.
2. Actual dimensions may vary depending on modular manufacturer's design, typ.

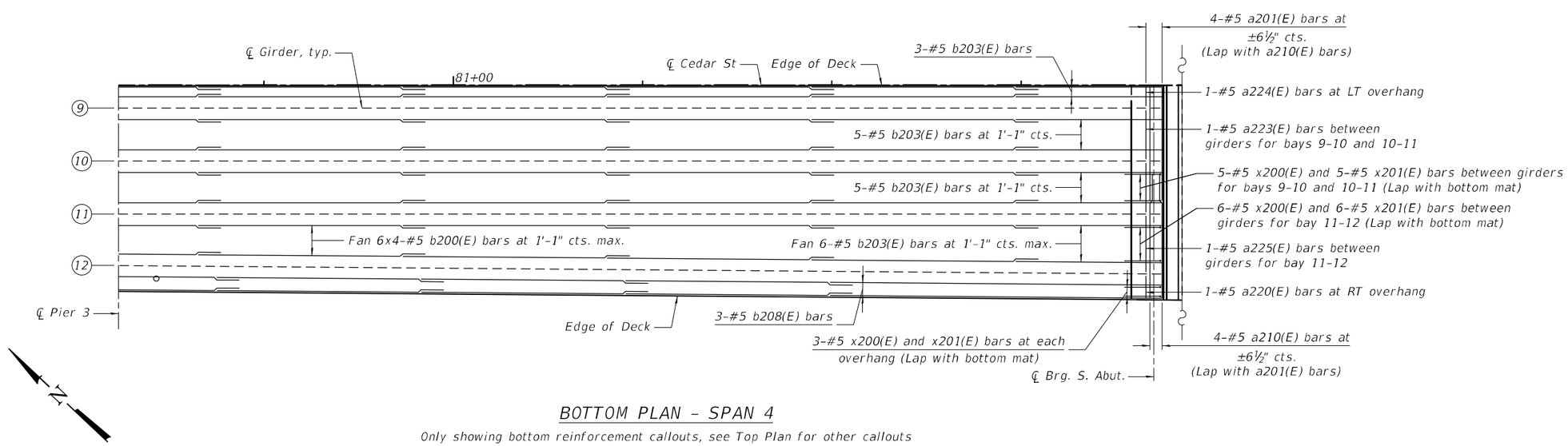

BOTTOM PLAN - SPAN 4

Only showing bottom reinforcement callouts, see Top Plan for other callouts

MODEL: Default
FILE NAME: pw:\\mbi-us-pw.bentley.com:mbi-us-pw-03\Documents\Chicago_IL\01 Projects\179740 IDOT Cedar\SIE\4 PhII\5.0 CADD\CAD Sheets\0900182-68C55-D6\24Deck4Plans RT.dgn

Michael Baker INTERNATIONAL
200 W Adams Street
Suite 1800
Chicago, IL 60606
PH: 312.707.8700
FAX: 312.707.8804

USER NAME = DLamb	DESIGNED - TJN	REVISED -	
	CHECKED - DRH	REVISED -	
PLOT SCALE = 15.999936 ' / in.	DRAWN - TJN	REVISED -	
PLOT DATE = 6/6/2023	CHECKED - DRH	REVISED -	

STATE OF ILLINOIS
DEPARTMENT OF TRANSPORTATION

RT UNIT 1 – DECK PLAN 5
STRUCTURE NO. 090–0182

SHEET S-60 OF S-194 SHEETS

F.A.P. RTE.	SECTION	COUNTY	TOTAL SHEETS	SHEET NO.
VAR.	13 (HVB, HB-3) BR-1;R	TAZEWELL	1173	586
		CONTRACT NO. 68C55		
		ILLINOIS FED. AID PROJECT		

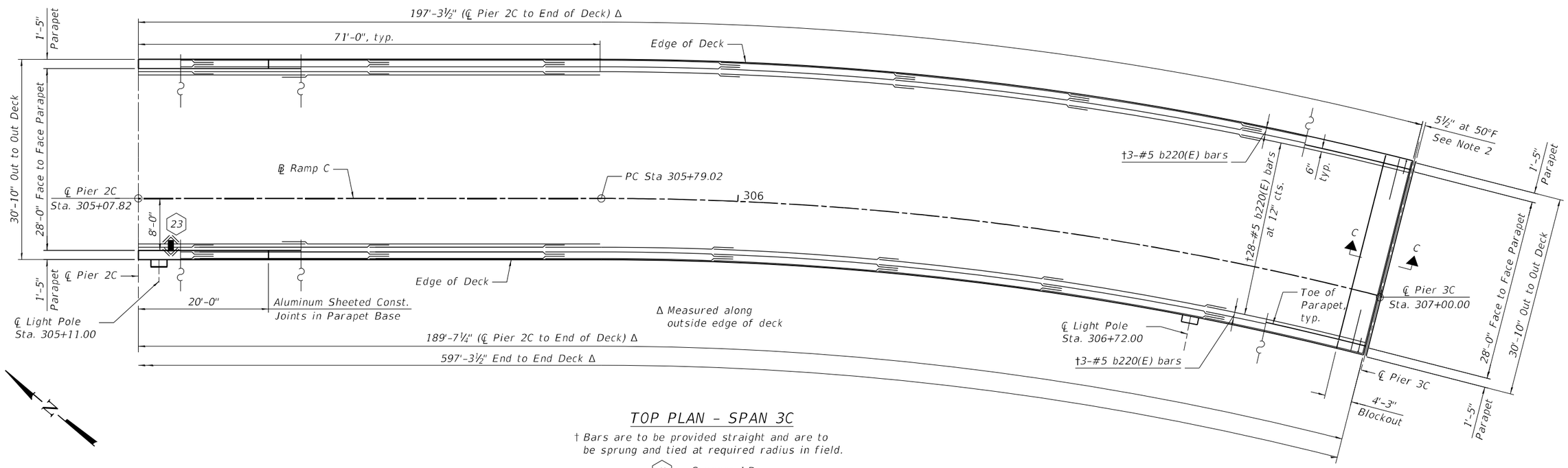

TOP PLAN - SPAN 3C

† Bars are to be provided straight and are to be sprung and tied at required radius in field.

(X) = Scupper I.D.

NOTE:

1. For typical deck notes and minimum bar laps, see S-56.
2. Actual dimensions may vary depending on modular joint manufacturer's design, typ.

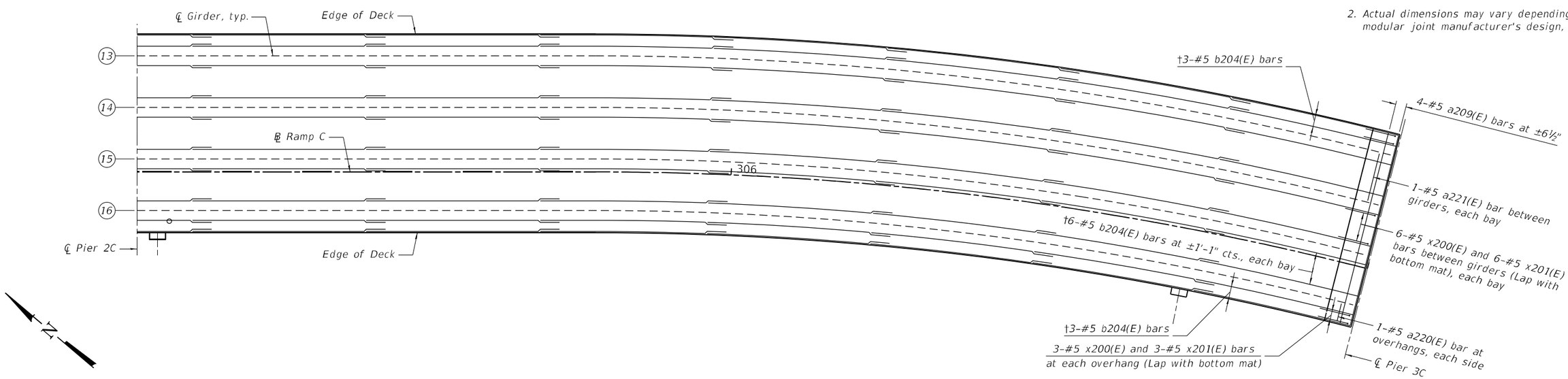

BOTTOM PLAN - SPAN 3C

Only showing bottom reinforcement callouts, see Top Plan for other callouts

† Bars are to be provided straight and are to be sprung and tied at required radius in field.

MODEL: Default
FILE NAME: pw:\\mi-uswpw-031\Documents\Chicago IL\01 Projects\179740 IDOT Cedo\Sfxt Plh\5.0 CADD\CAD Sheets\0900182-68C55-061-Deck6Ln6 Rt.dgn

Michael Baker INTERNATIONAL
200 W Adams Street
Suite 1800
Chicago, IL 60606
P: 312.707.8770
FAX: 312.707.8804

USER NAME = DLamb	DESIGNED - TJN	REVISED -	
	CHECKED - DRH	REVISED -	
PLOT SCALE = 15.999936 ' / in.	DRAWN - TJN	REVISED -	
PLOT DATE = 6/6/2023	CHECKED - DRH	REVISED -	

STATE OF ILLINOIS
DEPARTMENT OF TRANSPORTATION

RT UNIT 1 – DECK PLAN 6
STRUCTURE NO. 090–0182

SHEET S-61 OF S-194 SHEETS

F.A.P. RTE.	SECTION	COUNTY	TOTAL SHEETS	SHEET NO.
VAR.	13 (HVB, HB-3) BR-1:R	TAZEWELL	1173	587
		CONTRACT NO. 68C55		
	ILLINOIS	FED. AID PROJECT		

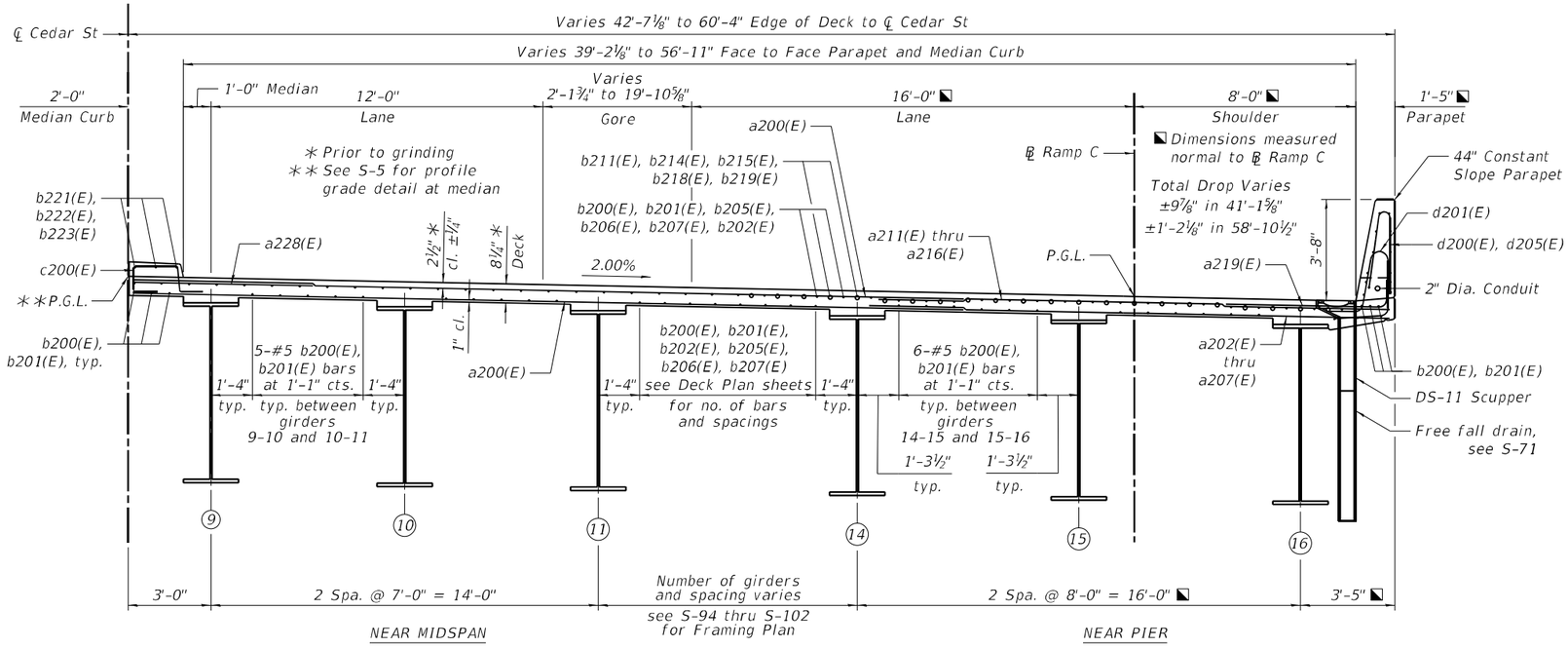

DECK CROSS SECTION - RT UNIT 1 - SPANS 1 THRU 2 BEFORE SPLIT

(Looking Upstation)

Sta. 74+48.14 to 77+89.95 along ℄ Cedar St

NOTES:

1. See S-75 for Bill of Material.
2. For median curb details, see S-72.
3. Barrier widths are measured perpendicular from the edge of deck. All other dimensions are measured perpendicular to the alignments shown unless noted otherwise.
4. Total drop dimensions are from edge of deck at median to toe of parapet.

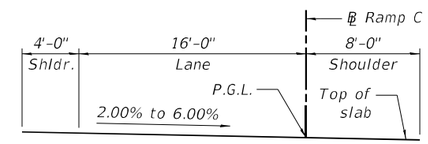

Sta. 305+23.41 to 306+33.51

DECK CROSS SLOPE DETAILS

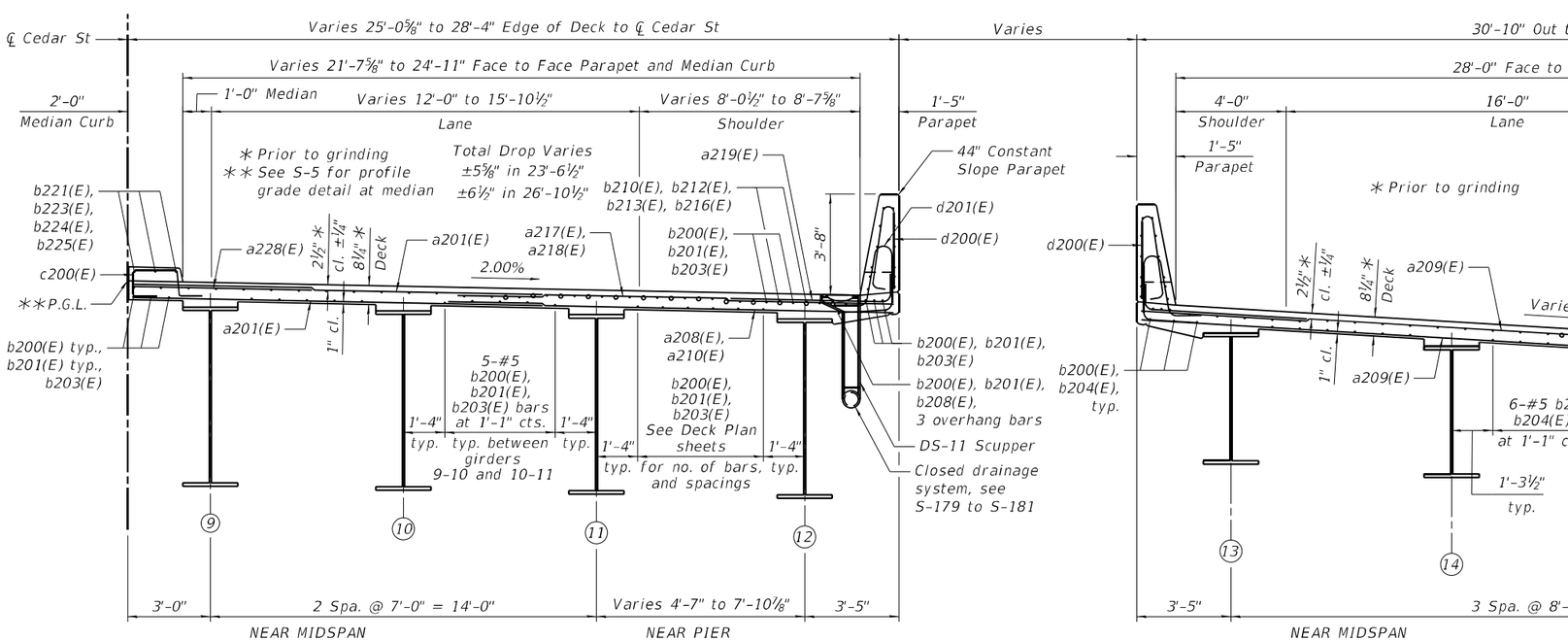

DECK CROSS SECTION - RT UNIT 1 - SPANS 2 THRU 4 AFTER SPLIT

(Looking Upstation)

Sta. 77+89.95 to 81+93.80 along ℄ Cedar St

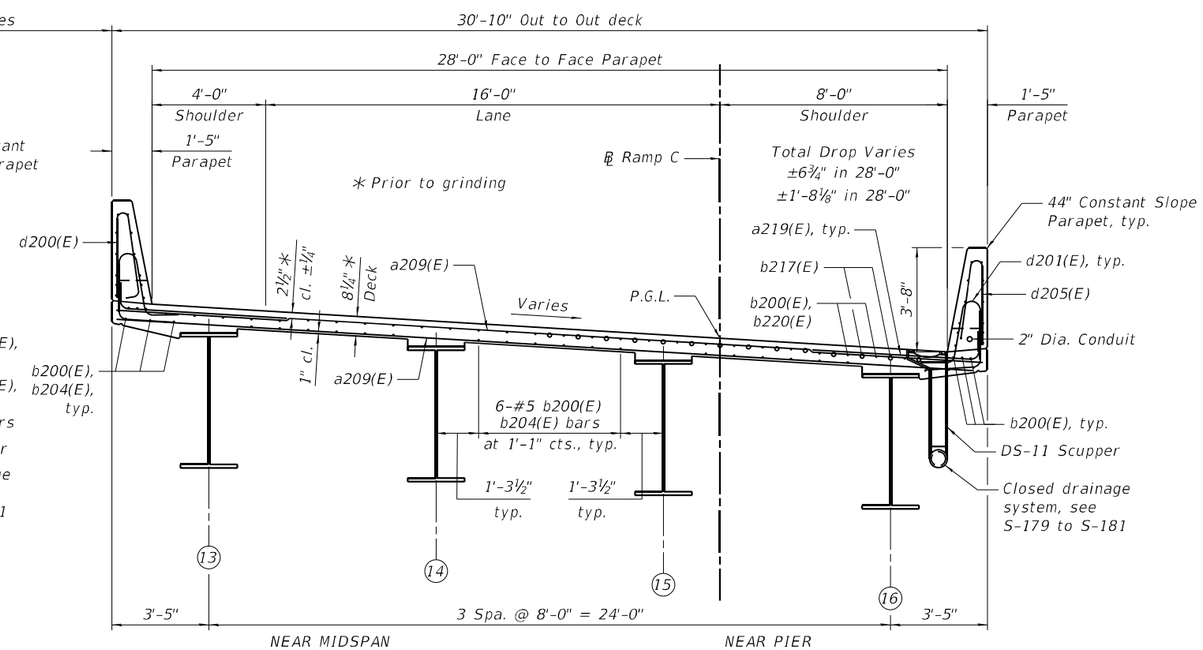

DECK CROSS SECTION - RT UNIT 1 - RAMP C

(Looking Upstation)

Sta. 304+40.81 to 306+99.77 along ℄ Ramp C

Michael Baker INTERNATIONAL
200 W Adams Street
Suite 1800
Chicago, IL 60606
P:+1 312.707.8770
FAX: 3 12.707.8804

USER NAME = DLamb	DESIGNED - TJN	REVISED -	
	CHECKED - DRH	REVISED -	
PLOT SCALE = 5.333312 ' / in.	DRAWN - TJN	REVISED -	
PLOT DATE = 6/6/2023	CHECKED - DRH	REVISED -	

STATE OF ILLINOIS
DEPARTMENT OF TRANSPORTATION

RT UNIT 1 – DECK CROSS SECTIONS
STRUCTURE NO. 090–0182

SHEET S-62 OF S-194 SHEETS

F.A.P. RTE.	SECTION	COUNTY	TOTAL SHEETS	SHEET NO.
VAR.	13 (HVB, HB-3) 8R-1:R	TAZEWELL	1173	588
		CONTRACT NO. 68C55		
	ILLINOIS	FED. AID PROJECT		

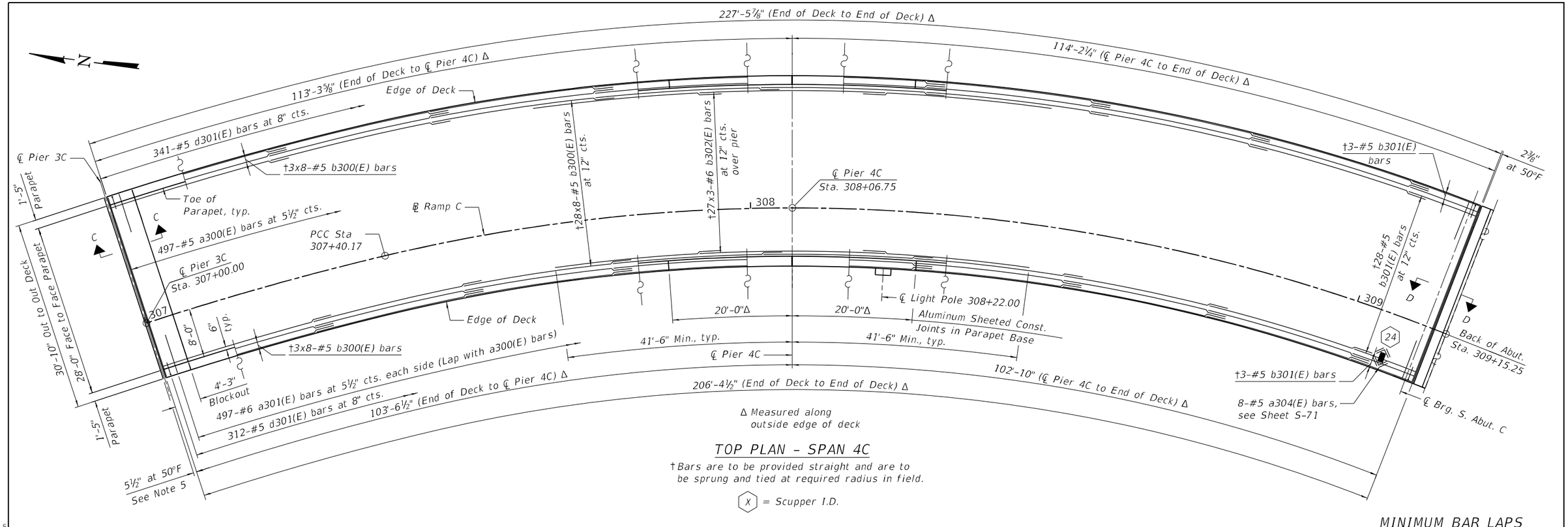

Δ Measured along outside edge of deck

TOP PLAN - SPAN 4C

†Bars are to be provided straight and are to be sprung and tied at required radius in field.

(X) = Scupper I.D.

MINIMUM BAR LAPS

Top Transverse #5 bar = 3'-1"
Bottom Transverse #5 bar = 3'-6"
Top Longitudinal #5 bar = 3'-0"
Bottom Longitudinal #5 bar = 3'-0"
Top Longitudinal #6 bar = 3'-7"

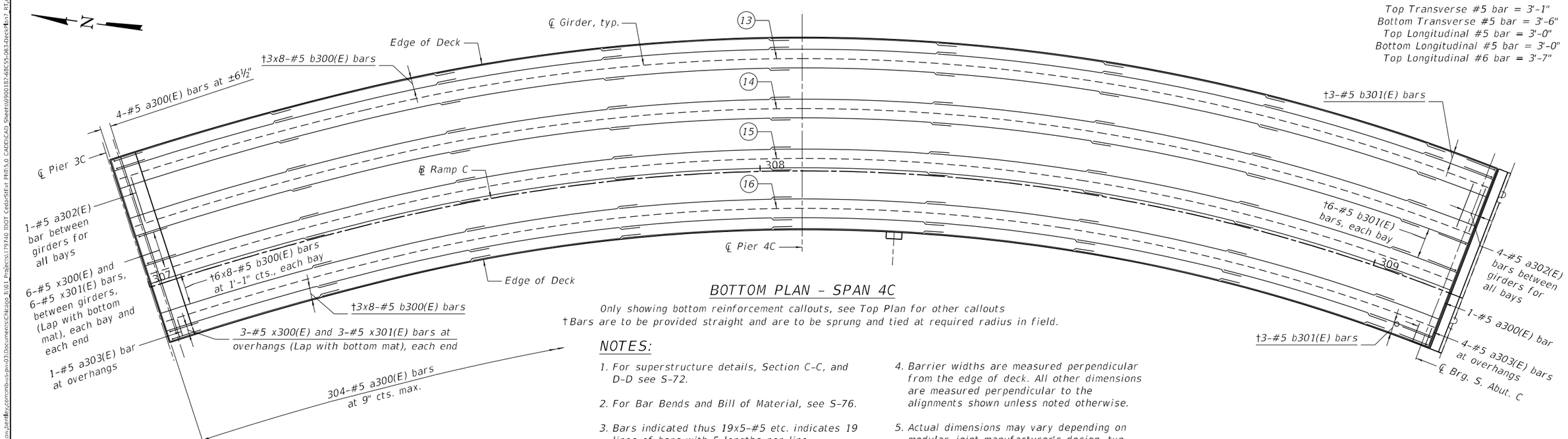

BOTTOM PLAN - SPAN 4C

Only showing bottom reinforcement callouts, see Top Plan for other callouts
†Bars are to be provided straight and are to be sprung and tied at required radius in field.

NOTES:

1. For superstructure details, Section C-C, and D-D see S-72.
2. For Bar Bends and Bill of Material, see S-76.
3. Bars indicated thus 19x5-#5 etc. indicates 19 lines of bars with 5 lengths per line.
4. Barrier widths are measured perpendicular from the edge of deck. All other dimensions are measured perpendicular to the alignments shown unless noted otherwise.
5. Actual dimensions may vary depending on modular joint manufacturer's design, typ.

NOTE:

See S-76 for Bill of Material.

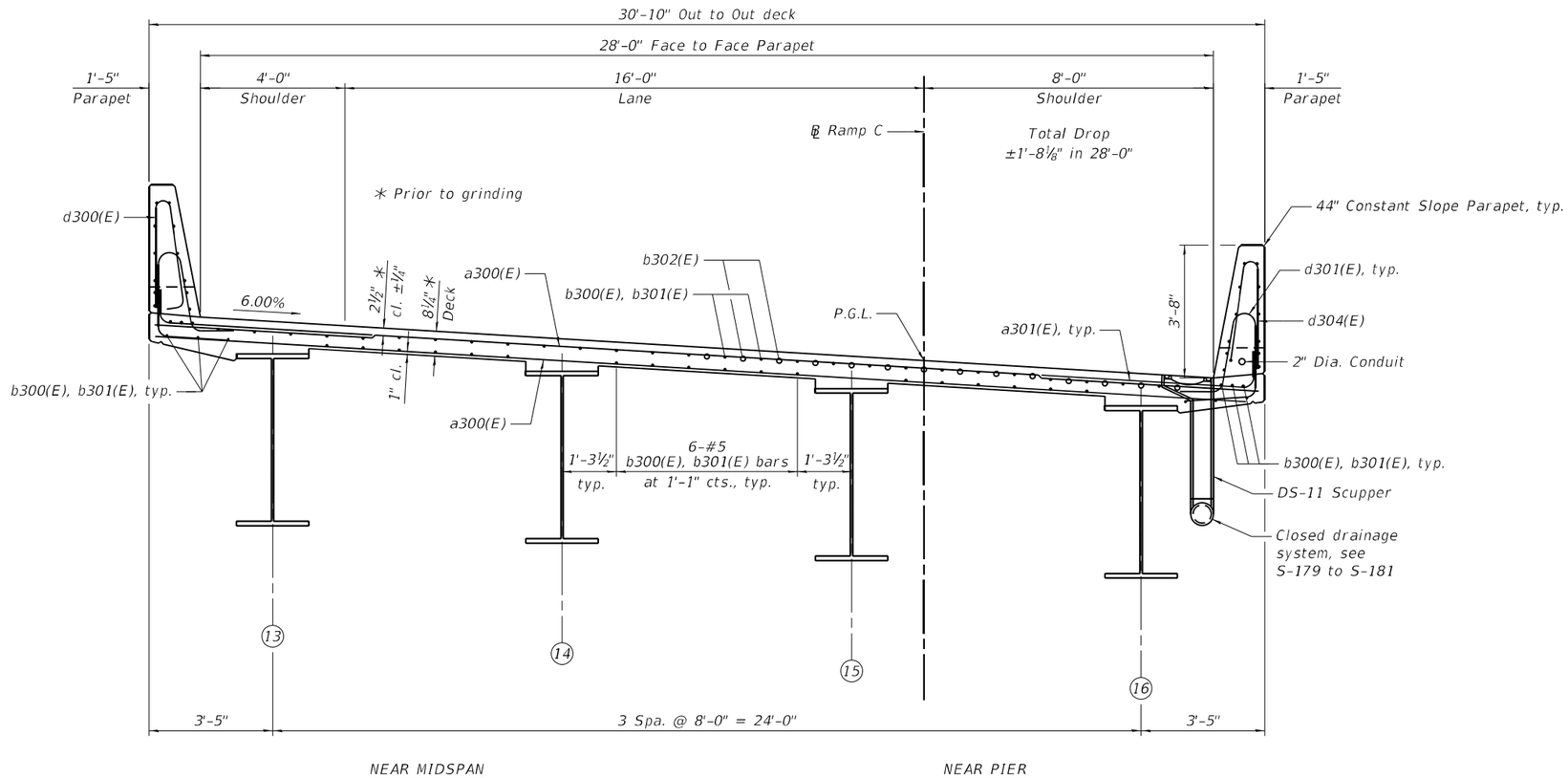

DECK CROSS SECTION - RT UNIT 2 - RAMP C

(Looking Upstation)
Sta. 307+00.23 to 309+13.05 along ℄ Ramp C

MODEL: Default
FILE NAME: pw:\\mb-us-pw.bentley.com:mb-us-pw-03\Documents\Chicago IL\01 Projects\179740 IDOT Ceda/SIE+ Phll5.0 CADD\CAD Sheets\0900182-68C55-064-DeckCrossSections_RT.dgn

Michael Baker INTERNATIONAL 200 W Adams Street Suite 1800 Chicago, IL 60606 PH: 312.707.8770 FAX: 312.707.8804	USER NAME = DLamb	DESIGNED - TJN	REVISED -	STATE OF ILLINOIS DEPARTMENT OF TRANSPORTATION	RT UNIT 2 – DECK CROSS SECTION STRUCTURE NO. 090–0182	F.A.P. RTE.	SECTION	COUNTY	TOTAL SHEETS / SHEET NO.
		CHECKED - DRH	REVISED -			VAR.	13 (HVB, HB-3) 8R-1:R	TAZEWELL	1173 / 590
	PLOT SCALE = 3.999984 ' / in.	DRAWN - TJN	REVISED -					CONTRACT NO. 68C55	
	PLOT DATE = 6/6/2023	CHECKED - DRH	REVISED -		SHEET S-64 OF S-194 SHEETS		ILLINOIS	FED. AID PROJECT	

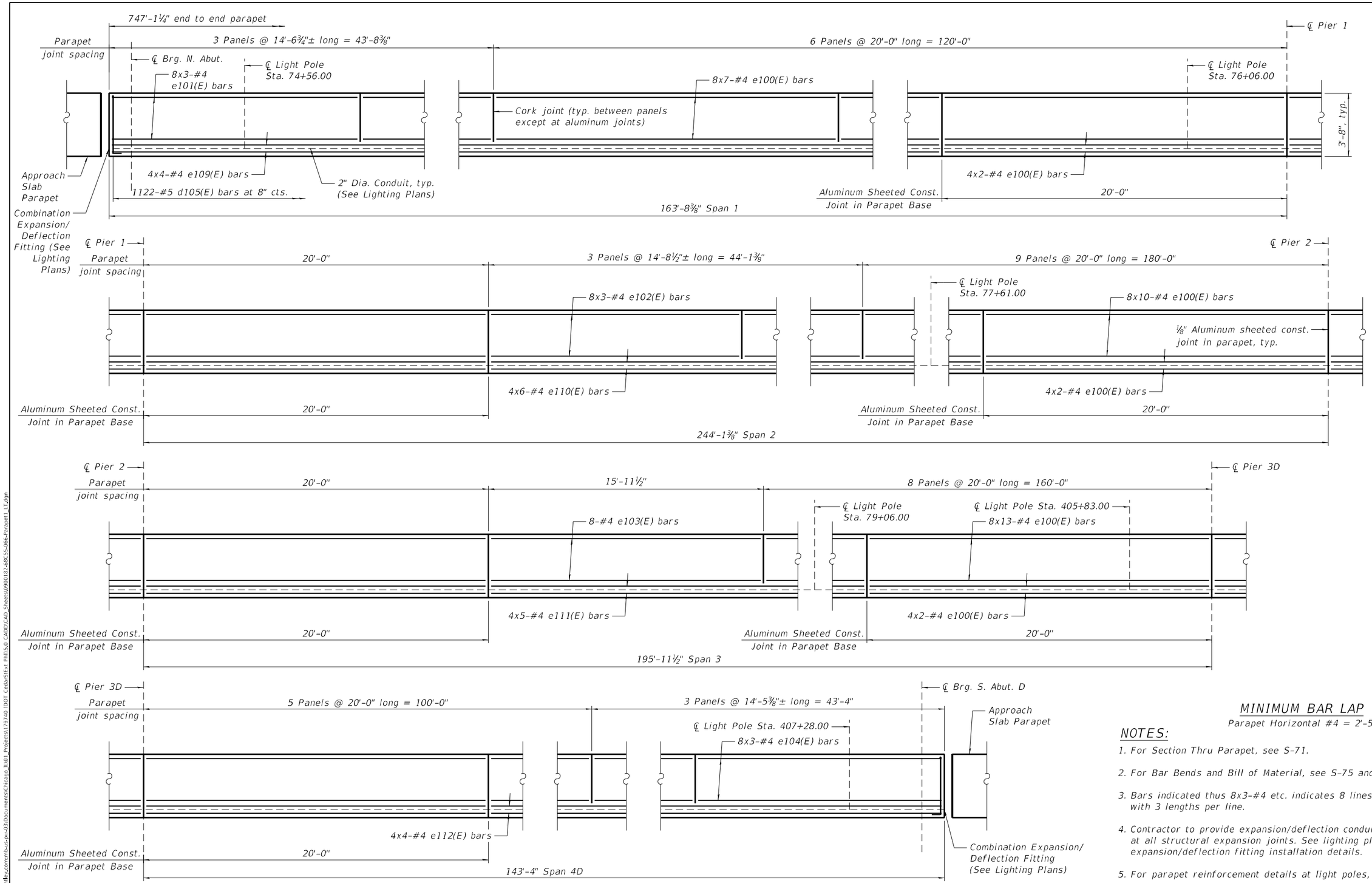

INSIDE ELEVATION OF OUTSIDE PARAPET

Dimensions measured along toe of parapet

MINIMUM BAR LAP

Parapet Horizontal #4 = 2'-5"

NOTES:

1. For Section Thru Parapet, see S-71.
2. For Bar Bends and Bill of Material, see S-75 and S-76.
3. Bars indicated thus 8x3-#4 etc. indicates 8 lines of bars with 3 lengths per line.
4. Contractor to provide expansion/deflection conduit fittings at all structural expansion joints. See lighting plans for expansion/deflection fitting installation details.
5. For parapet reinforcement details at light poles, see S-71.
6. Longitudinal bars are to be provided straight and are to be sprung and tied at required radius in field.

Michael Baker INTERNATIONAL
200 W Adams Street Suite 1800 Chicago, IL 60606 Ph: 312.707.8770 FAX: 312.707.8804

USER NAME = DLamb	DESIGNED - TJN	REVISED -	
	CHECKED - DRH	REVISED -	
PLOT SCALE = 5.3333 ' / in.	DRAWN - TJN	REVISED -	
PLOT DATE = 6/6/2023	CHECKED - DRH	REVISED -	

STATE OF ILLINOIS
DEPARTMENT OF TRANSPORTATION

LT UNIT 1 – PARAPET ELEVATIONS 1
STRUCTURE NO. 090–0182

SHEET S-65 OF S-194 SHEETS

F.A.P. RTE.	SECTION	COUNTY	TOTAL SHEETS	SHEET NO.
VAR.	13 (HVB, HB-3) BR-1;R	TAZEWELL	1173	591
		CONTRACT NO. 68C55		
	ILLINOIS	FED. AID PROJECT		

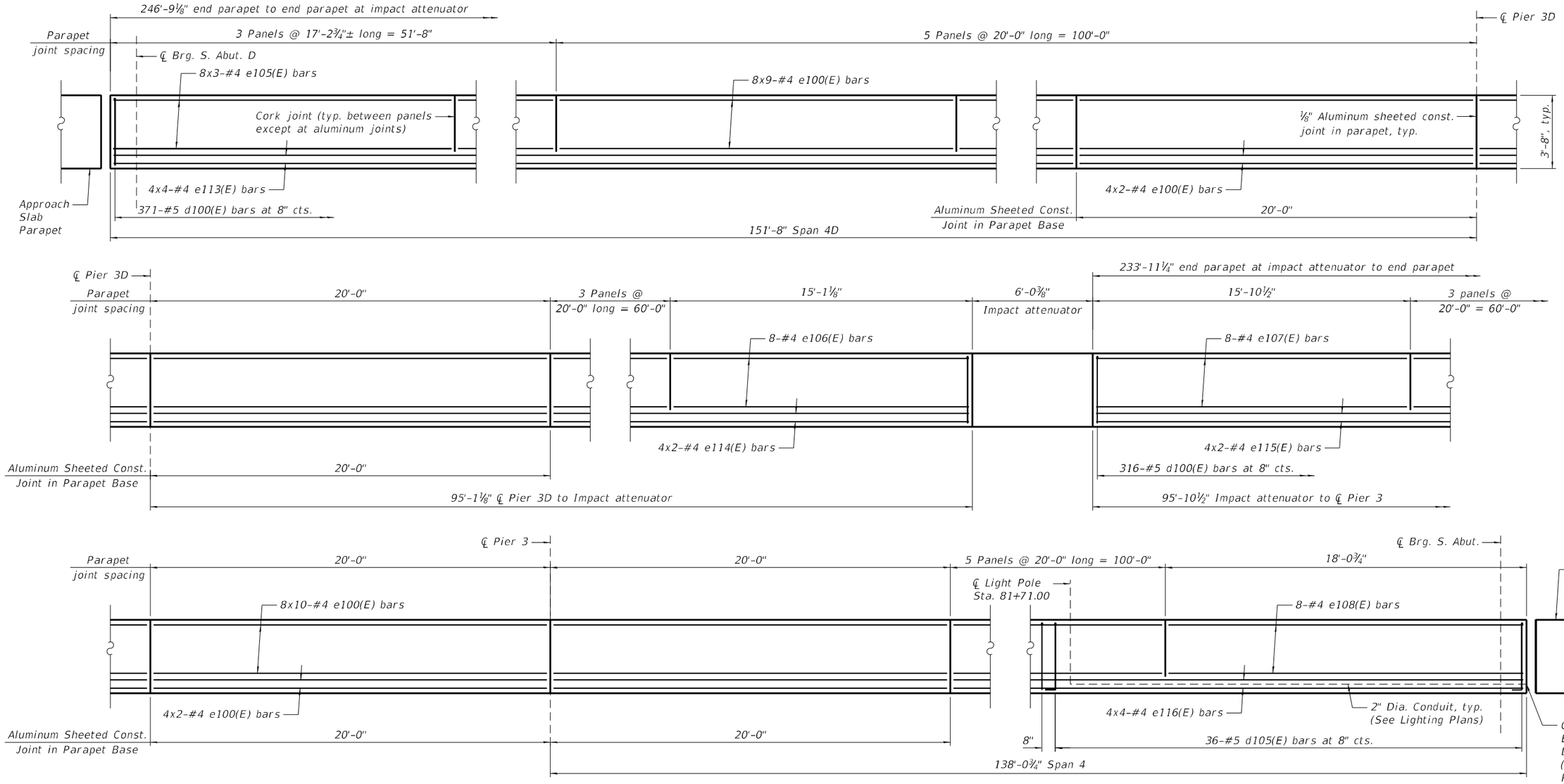

INSIDE ELEVATION OF RAMP D AND MAINLINE PARAPET

Dimensions measured along toe of parapet
Unfolded elevation view shown

NOTES:

1. For typical parapet notes and minimum bar lap, see S-66.
2. For details at impact attenuator, see S-73.

Michael Baker INTERNATIONAL
200 W Adams Street
Suite 1800
Chicago, IL 60606
PH: 312.707.8772
FAX: 312.707.8804

USER NAME = DLamb	DESIGNED - TJN	REVISED -	
	CHECKED - DRH	REVISED -	
PLOT SCALE = 5.3333 ' / in.	DRAWN - TJN	REVISED -	
PLOT DATE = 6/6/2023	CHECKED - DRH	REVISED -	

STATE OF ILLINOIS
DEPARTMENT OF TRANSPORTATION

LT UNIT 1 – PARAPET ELEVATIONS 2
STRUCTURE NO. 090–0182

SHEET S-66 OF S-194 SHEETS

F.A.P. RTE.	SECTION	COUNTY	TOTAL SHEETS	SHEET NO.
VAR.	13 (HVB, HB-3) BR-1;R	TAZEWELL	1173	592
		CONTRACT NO. 68C55		
	ILLINOIS	FED. AID PROJECT		

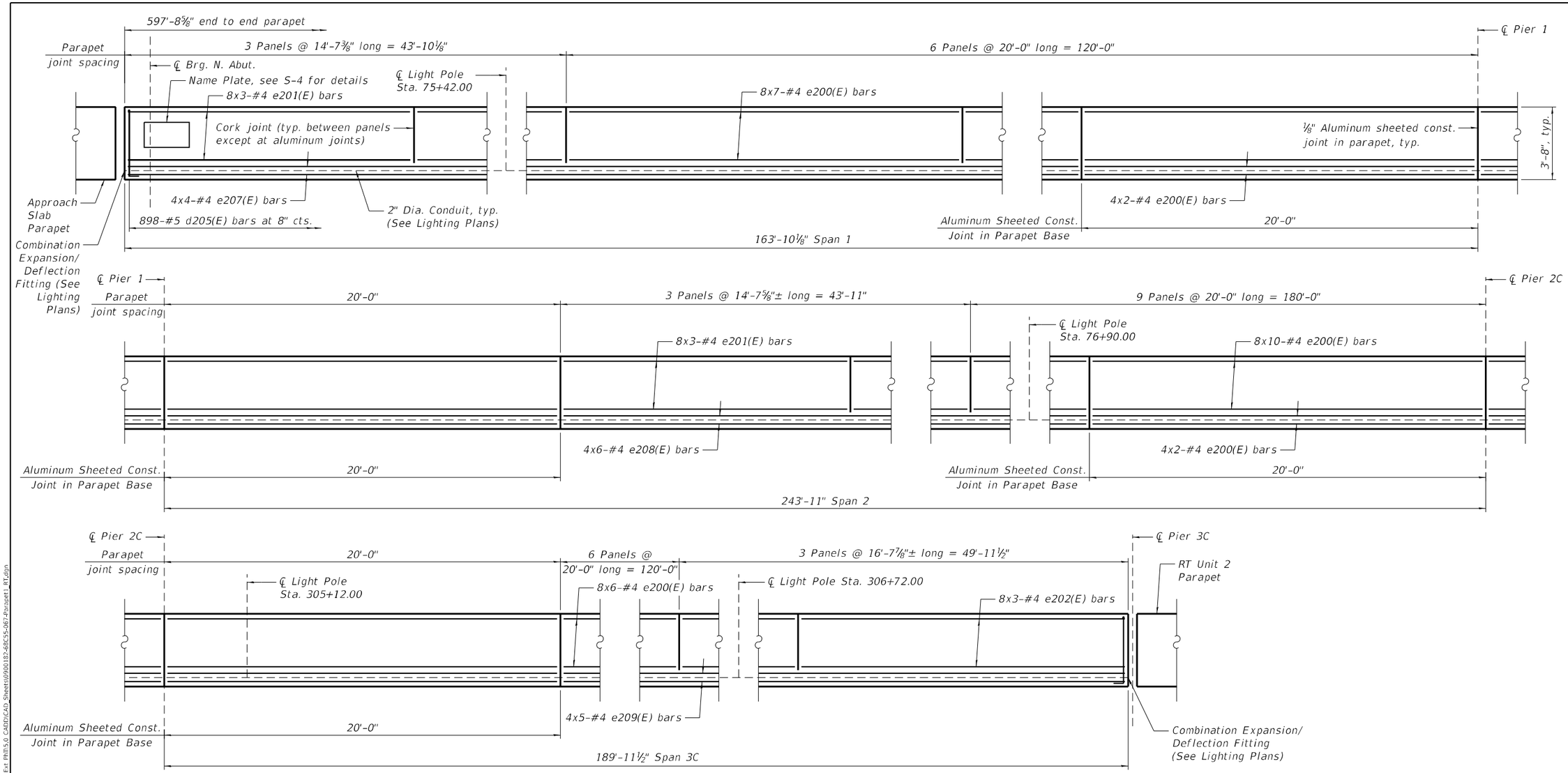

MIRRORED INSIDE ELEVATION OF OUTSIDE PARAPET

Dimensions measured along toe of parapet

MINIMUM BAR LAP

Parapet Horizontal #4 = 2'-5"

NOTES:

1. For Section Thru Parapet, see S-71.
2. For Bar Bends and Bill of Material, see S-75 and S-76.
3. Bars indicated thus 8x3-#4 etc. indicates 8 lines of bars with 3 lengths per line.
4. Contractor to provide expansion/deflection conduit fittings at all structural expansion joints. See lighting plans for expansion/deflection fitting installation details.
5. For parapet reinforcement details at light poles, see S-71.
6. Longitudinal bars are to be provided straight and are to be sprung and tied at required radius in field.

Michael Baker INTERNATIONAL
200 W Adams Street Suite 1800 Chicago, IL 60606 PH: 312.707.8775 FAX: 312.707.8804

USER NAME = DLamb	DESIGNED - TJN	REVISED -
	CHECKED - DRH	REVISED -
PLOT SCALE = 5.3333 ' / in.	DRAWN - TJN	REVISED -
PLOT DATE = 8/6/2023	CHECKED - DRH	REVISED -

STATE OF ILLINOIS
DEPARTMENT OF TRANSPORTATION

RT UNIT 1 – PARAPET ELEVATIONS 1
STRUCTURE NO. 090–0182

SHEET S-67 OF S-194 SHEETS

F.A.P. RTE.	SECTION	COUNTY	TOTAL SHEETS	SHEET NO.
VAR.	13 (HVB, HB-3) BR-1;R	TAZEWELL	1173	593
		CONTRACT NO. 68C55		
		ILLINOIS FED. AID PROJECT		

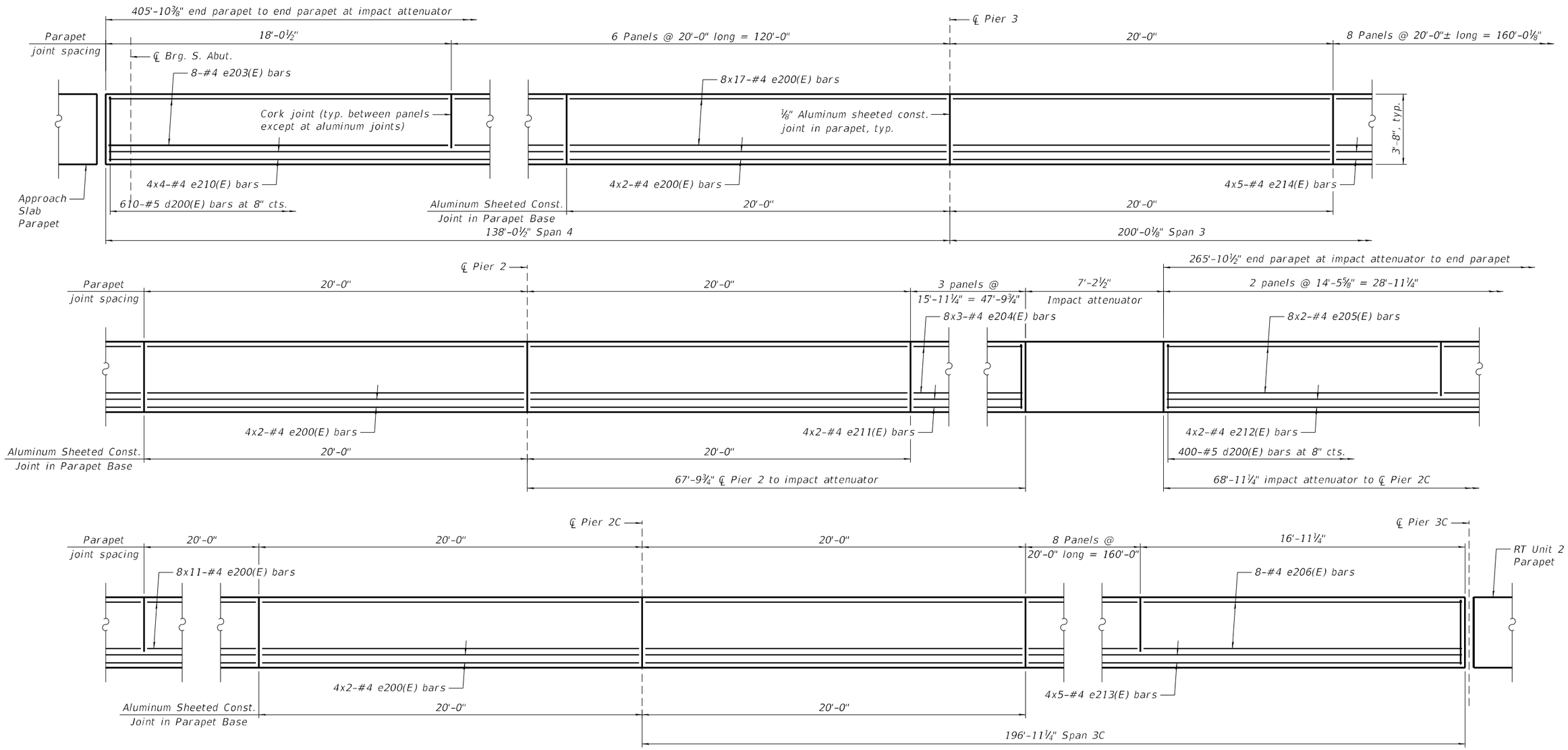

INSIDE ELEVATION OF RAMP C AND MAINLINE PARAPET

Dimensions measured along toe of parapet
Unfolded elevation view shown

NOTES:

1. For typical parapet notes and minimum bar lap, see S-67.
2. For details at impact attenuator, see S-73.

Michael Baker INTERNATIONAL
200 W Adams Street
Suite 1800
Chicago, IL 60606
PH: 312.707.8770
FAX: 312.707.8804

USER NAME = DLamb	DESIGNED - TJN	REVISED -	
	CHECKED - DRH	REVISED -	
PLOT SCALE = 5.3333 ' / in.	DRAWN - TJN	REVISED -	
PLOT DATE = 6/6/2023	CHECKED - DRH	REVISED -	

STATE OF ILLINOIS
DEPARTMENT OF TRANSPORTATION

RT UNIT 1 – PARAPET ELEVATIONS 2
STRUCTURE NO. 090–0182

SHEET S-68 OF S-194 SHEETS

F.A.P. RTE.	SECTION	COUNTY	TOTAL SHEETS	SHEET NO.
VAR.	13 (HVB, HB-3) BR-1:R	TAZEWELL	1173	594
		CONTRACT NO. 68C55		
	ILLINOIS	FED. AID PROJECT		

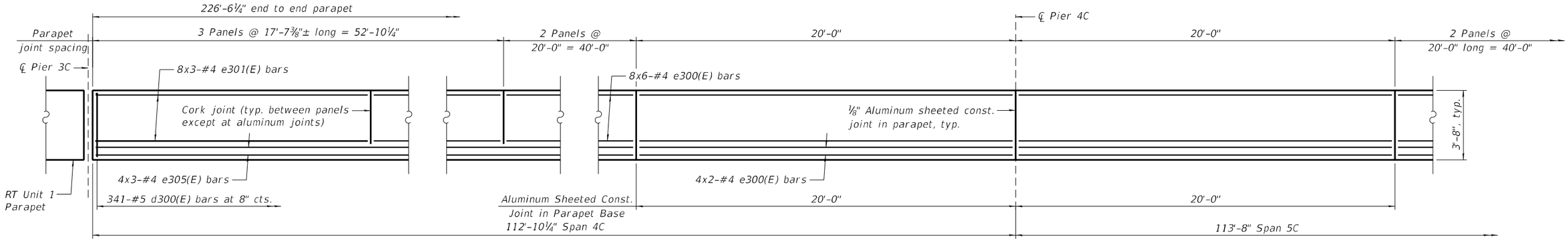

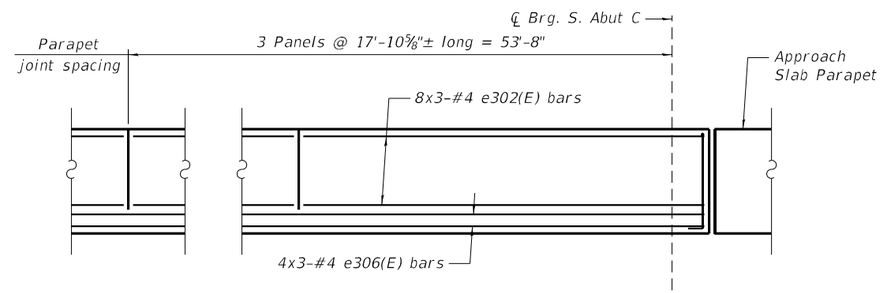

INSIDE ELEVATION OF LT PARAPET

Dimensions measured along toe of parapet

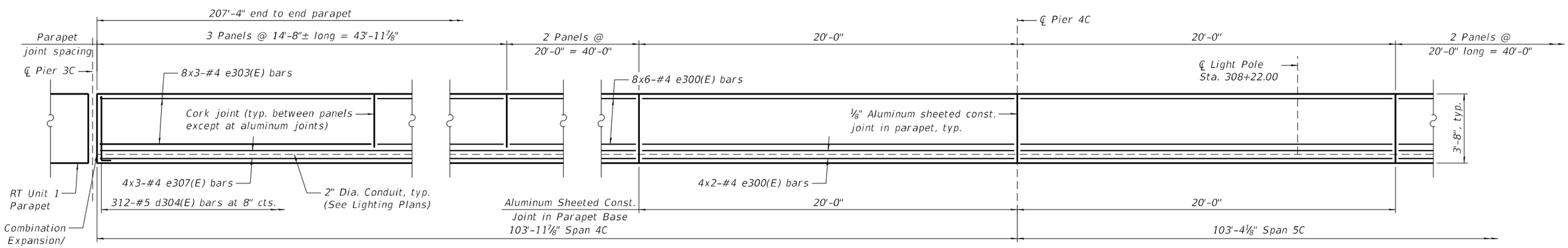

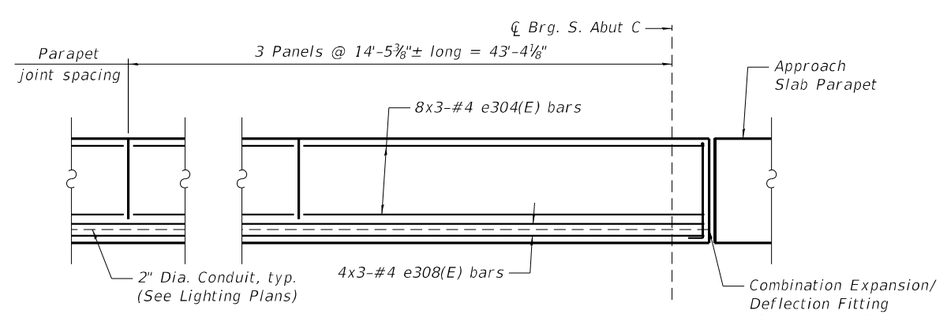

MIRRORED INSIDE ELEVATION OF RT PARAPET

Dimensions measured along toe of parapet

MINIMUM BAR LAP

Parapet Horizontal #4 = 2'-5"

NOTES:

1. For Section Thru Parapet, see S-71.
2. For Bar Bends and Bill of Material, see S-75 and S-76.
3. Bars indicated thus 8x3-#4 etc. indicates 8 lines of bars with 3 lengths per line.
4. Contractor to provide expansion/deflection conduit fittings at all structural expansion joints. See lighting plans for expansion/deflection fitting installation details.
5. For parapet reinforcement details at light poles, see S-71.
6. Longitudinal bars are to be provided straight and are to be sprung and tied at required radius in field.

Michael Baker INTERNATIONAL
200 W Adams Street Suite 1800 Chicago, IL 60606 PH: 312.707.8770 FAX: 312.707.8804

USER NAME = DLamb	DESIGNED - TJN	REVISED -	
	CHECKED - DRH	REVISED -	
PLOT SCALE = 5.3333 ' / in.	DRAWN - TJN	REVISED -	
PLOT DATE = 6/6/2023	CHECKED - DRH	REVISED -	

STATE OF ILLINOIS
DEPARTMENT OF TRANSPORTATION

RT UNIT 2 – PARAPET ELEVATIONS
STRUCTURE NO. 090–0182

SHEET S-69 OF S-194 SHEETS

F.A.P. RTE.	SECTION	COUNTY	TOTAL SHEETS	SHEET NO.
VAR.	13 (HVB, HB-3) BR-1;R	TAZEWELL	1173	595
		CONTRACT NO. 68C55		
	ILLINOIS	FED. AID PROJECT		

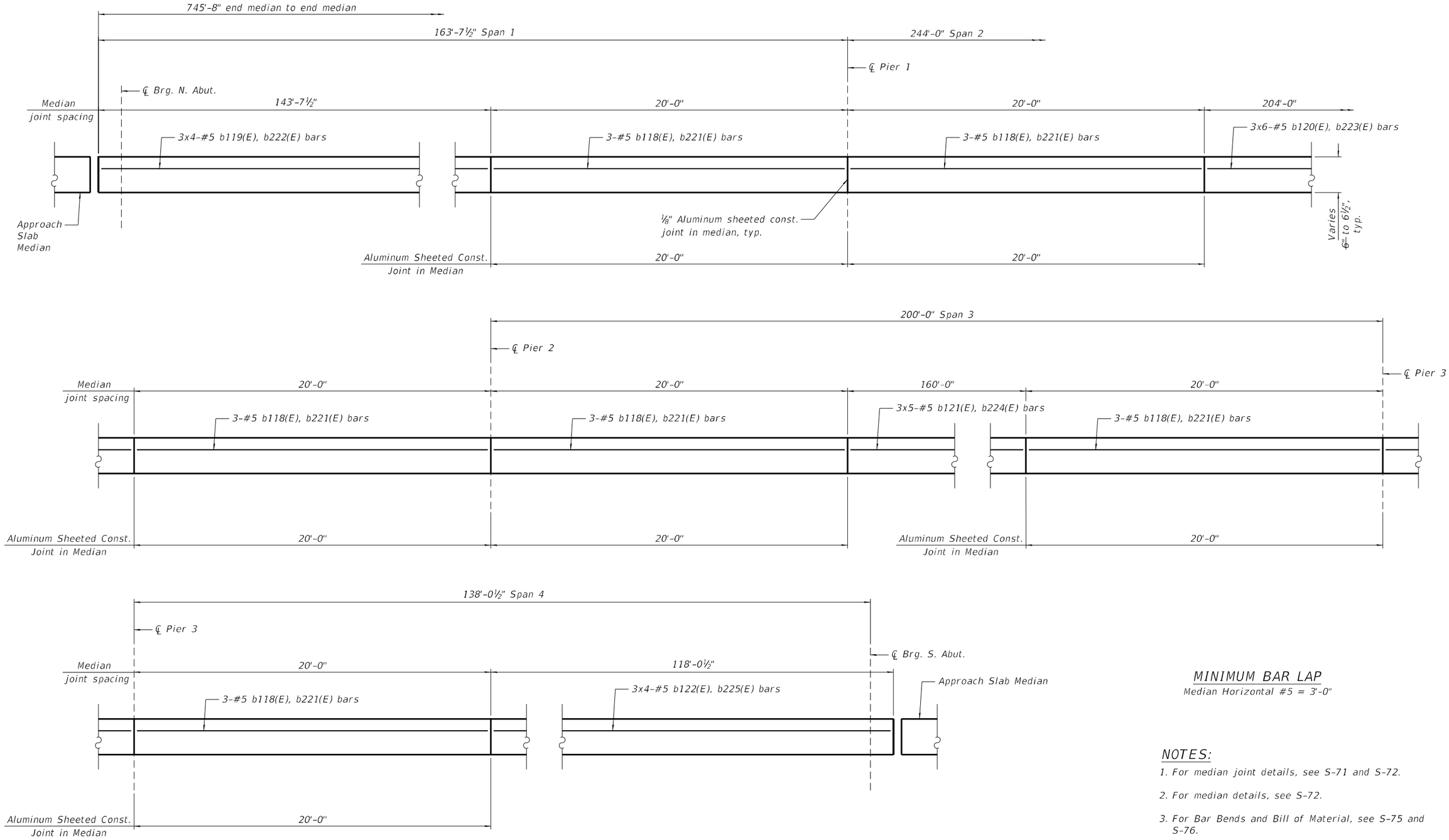

ELEVATION OF MEDIAN

Median identical for LT Unit 1 and RT Unit 1

MINIMUM BAR LAP

Median Horizontal #5 = 3'-0"

NOTES:

1. For median joint details, see S-71 and S-72.
2. For median details, see S-72.
3. For Bar Bends and Bill of Material, see S-75 and S-76.
4. Bars indicated thus 3x2-#5 etc. indicates 3 lines of bars with 2 lengths per line.
5. Bars with b1XX(E) or c1XX(E) designation are for LT Unit 1. Bars with b2XX(E) or c2XX(E) designation are for RT Unit 1.

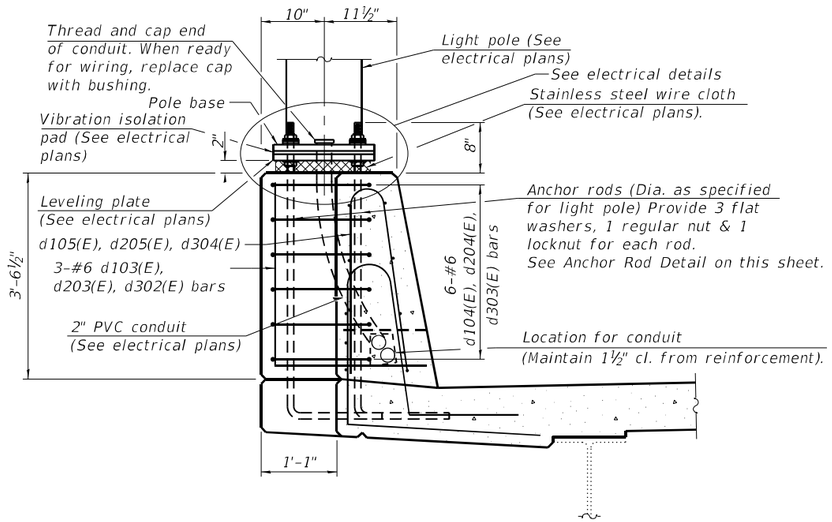

SECTION L-L

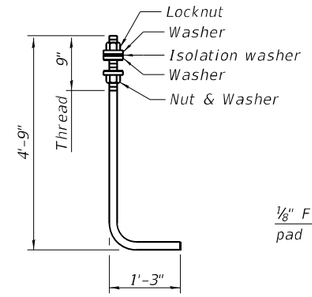

ANCHOR ROD

Diameter as specified for light poles.
(ASTM F 1554 Grade 105)
Full length hot dipped galvanized.

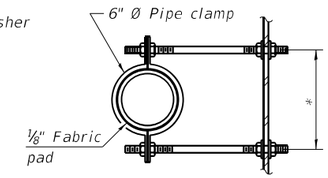

SECTION A-A

*Dimension as required by pipe clamp

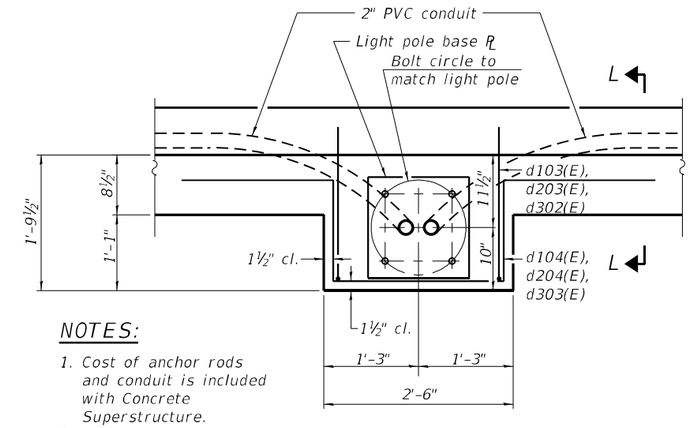

NOTES:

1. Cost of anchor rods and conduit is included with Concrete Superstructure.
2. Light poles are located to provide 4'-9" min. from ℄ Light Pole to parapet joints.

LIGHT POLE PLAN

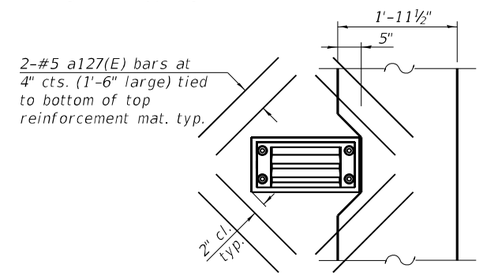

PLAN AT DRAINAGE SCUPPER AT MEDIAN

Note: Cut longitudinal deck and median reinforcement to clear drainage scuppers.

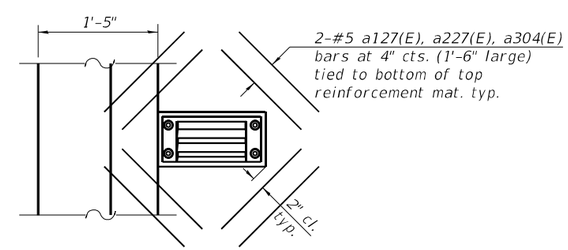

PLAN AT DRAINAGE SCUPPER AT PARAPET

Note: Cut longitudinal deck reinforcement to clear drainage scuppers.

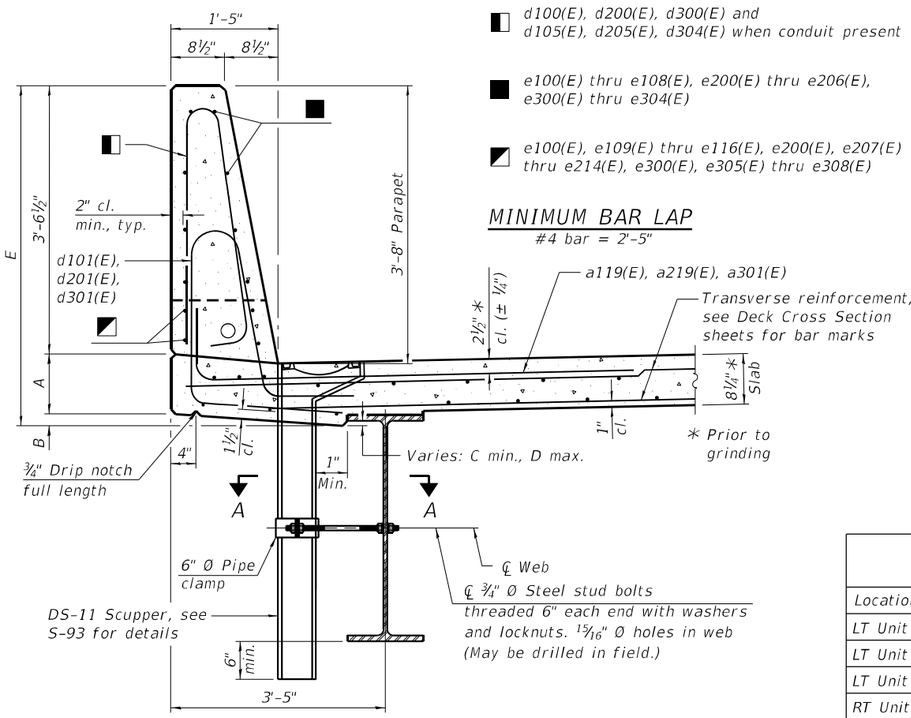

SECTION THRU PARAPET

Notes:
Only use connection details shown at free-fall locations. For connection details to drainage system, see S-179 thru S-181.

Overhang Dimensions					
Location	A	B	C	D	E
LT Unit 1 - Girder 1	9½"	4⅛"	¼"	3⅛"	4'-8⅛"
LT Unit 1 - Girder 4	11½"	5"	¼"	4"	4'-11"
LT Unit 1 - Girder 5	9½"	4⅛"	¼"	2⅜"	4'-8⅛"
RT Unit 1 - Girder 12	9½"	4⅜"	¼"	2¾"	4'-8⅜"
RT Unit 1 - Girder 13	11¾"	5"	¼"	3⅛"	4'-11¼"
RT Unit 1 - Girder 16	9½"	4½"	¼"	2⅝"	4'-8½"
RT Unit 2 - Girder 13	10"	5"	¼"	1½"	4'-9½"
RT Unit 2 - Girder 16	9½"	2⅝"	¼"	1⅝"	4'-6⅝"

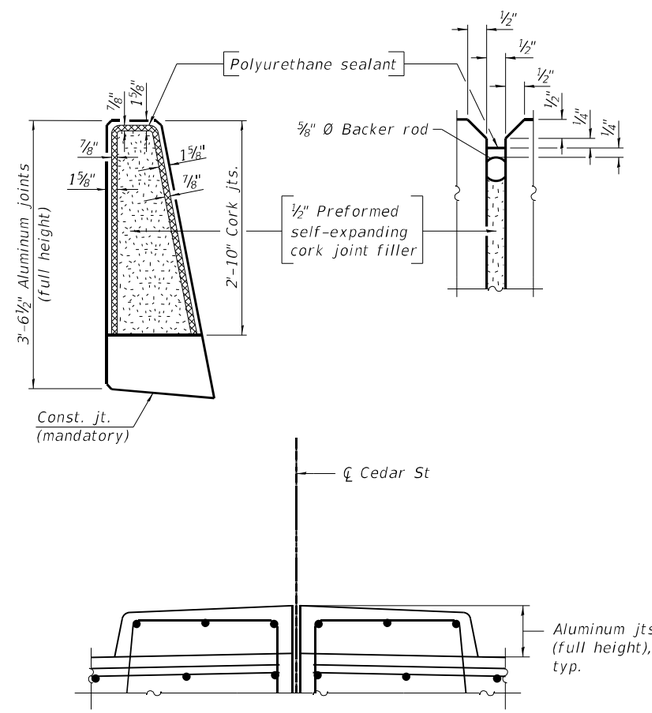

CURB & PARAPET JOINT DETAILS

Notes:
The ⅛" Aluminum sheet shall be ASTM B 209 alloy 3003-H14 and coated to minimize reaction with wet concrete. Cost included with Concrete Superstructure.
The Polyurethane Sealant shall be according to Article 1050.04 of the Std. Spec. and the color shall be gray.

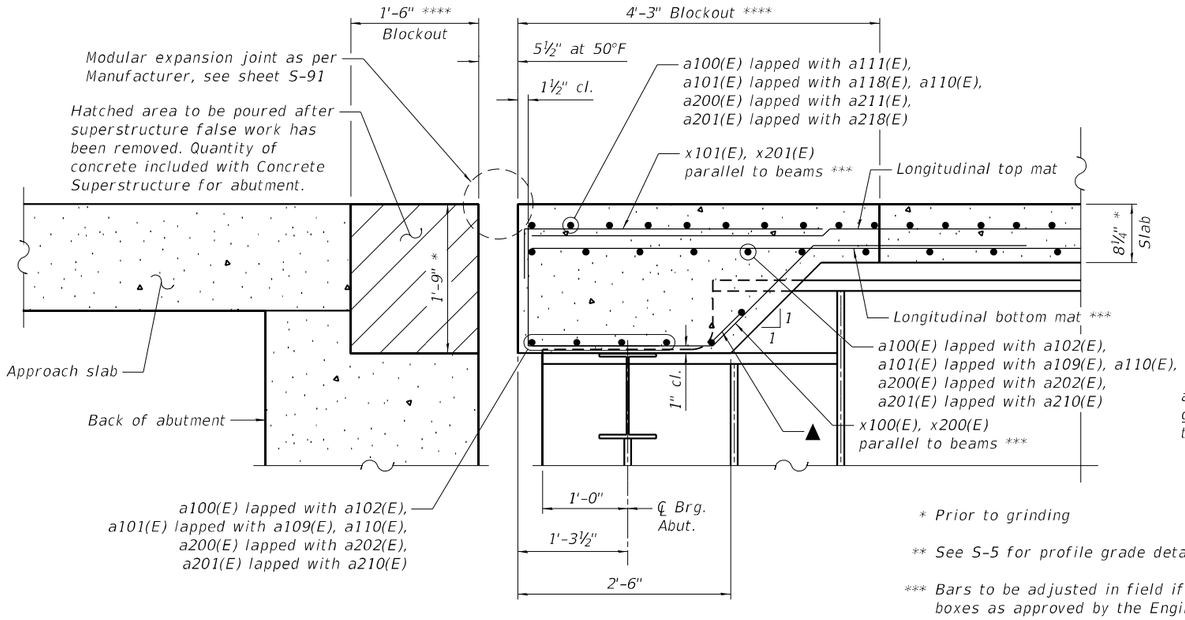

SECTION B-B

Modular Expansion Joint at Abutment
For bar marks not shown, see Deck Plan sheets

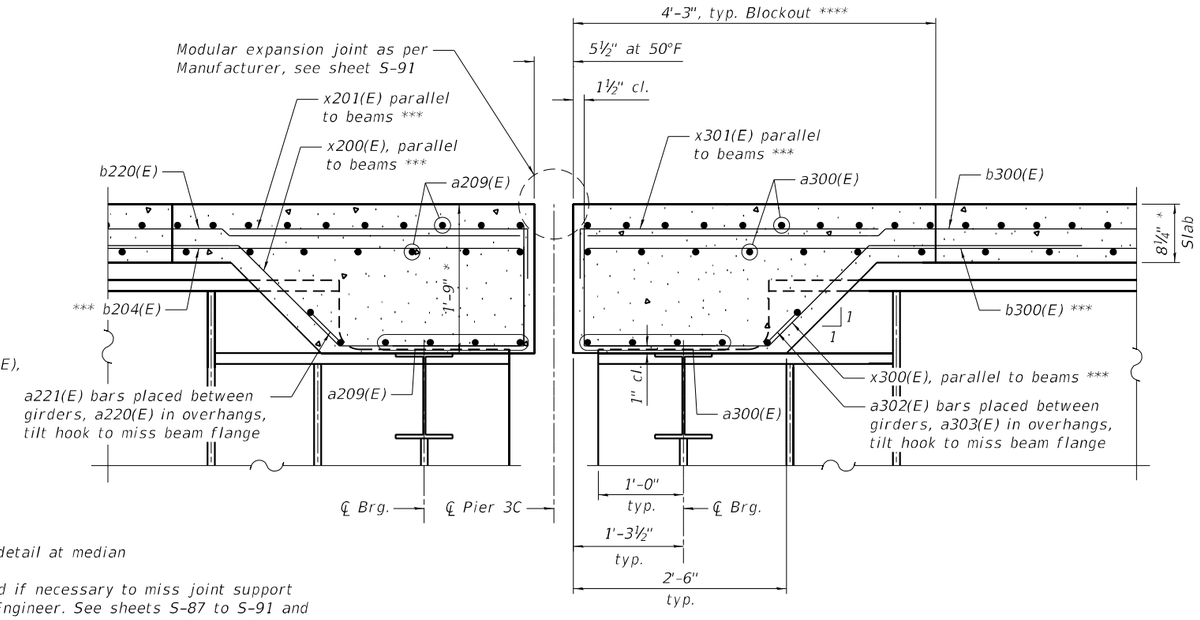

SECTION C-C

Modular Expansion Joint at Pier 3C
Dimensions are typ. for each side of joint

* Prior to grinding

** See S-5 for profile grade detail at median

*** Bars to be adjusted in field if necessary to miss joint support boxes as approved by the Engineer. See sheets S-87 to S-91 and shop drawings for modular expansion joints. See Special Provisions.

**** Blockout dimensions to be verified by Contractor with Joint Manufacturer

▲ a121(E) thru a123(E), a125(E), a221(E) thru a223(E), a225(E) bars placed between girders, a120(E), a124(E), a220(E), a224(E) in overhangs, tilt hook to miss beam flange

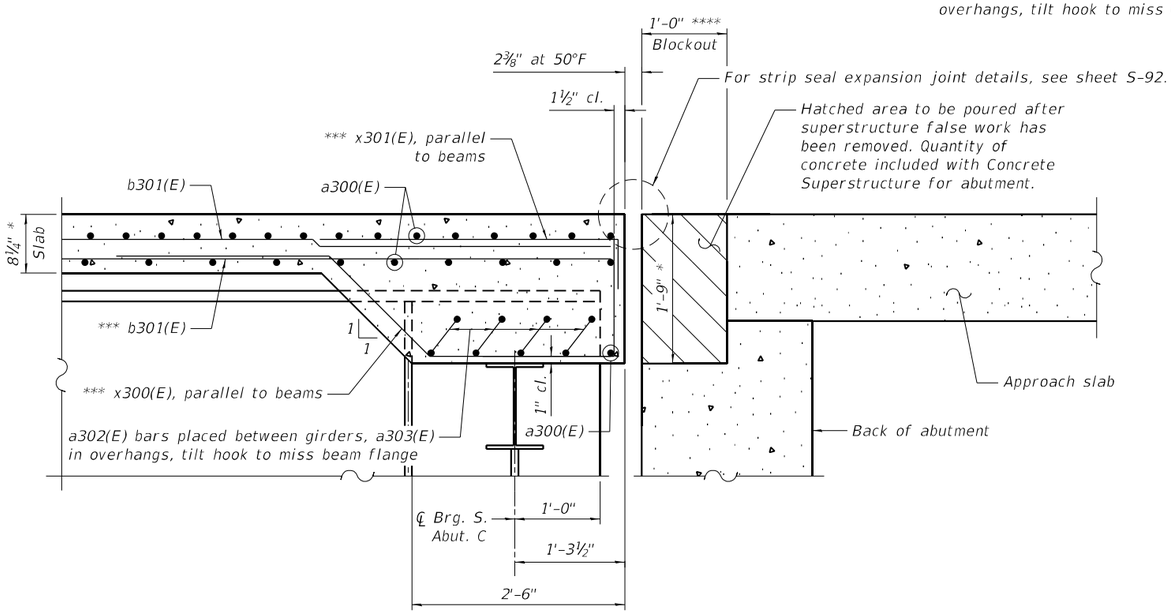

SECTION D-D

Strip Seal Expansion Joint at Abutment

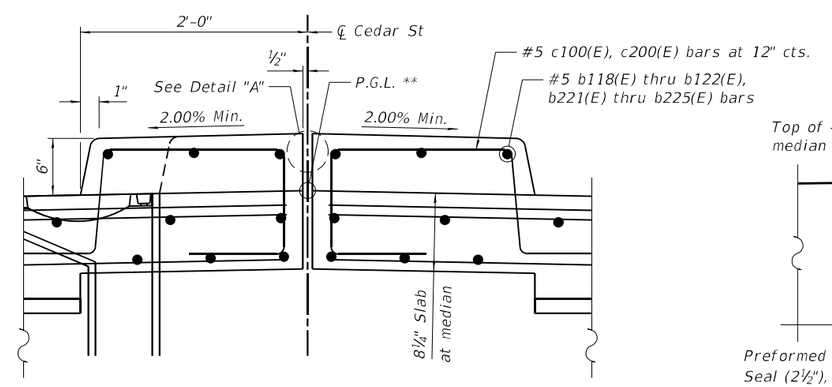

SECTION THRU MEDIAN

Symmetrical about ℄ Cedar St

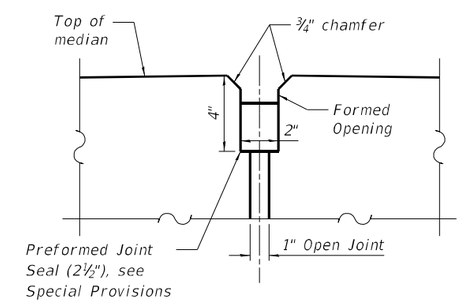

DETAIL "A"

MODEL: Default
FILE NAME: pw:\\mbs-us-pw.bentley.com:mb-us-pw-03\Documents\Chicago_IL\01 Projects\179740 IDOT Ceda\SIE+ PH15.0 CADD\CAD Sheets\0900187-68C55-072-Superhdetz.dgn

Michael Baker INTERNATIONAL
200 W Adams Street
Suite 1800
Chicago, IL 60606
PH: 312.707.8700
FAX: 312.707.8804

USER NAME = DLamb	DESIGNED - TJN	REVISED -
	CHECKED - DRH	REVISED -
PLOT SCALE = 1.333328 ' / in.	DRAWN - TJN	REVISED -
PLOT DATE = 6/6/2023	CHECKED - DRH	REVISED -

STATE OF ILLINOIS
DEPARTMENT OF TRANSPORTATION

SUPERSTRUCTURE DETAILS 2
STRUCTURE NO. 090-0182

SHEET S-72 OF S-194 SHEETS

F.A.P. RTE.	SECTION	COUNTY	TOTAL SHEETS	SHEET NO.
VAR.	13 (HVB, HB-3) BR-1;R	TAZEWELL	1173	598
		CONTRACT NO. 68C55		
		ILLINOIS	FED. AID PROJECT	

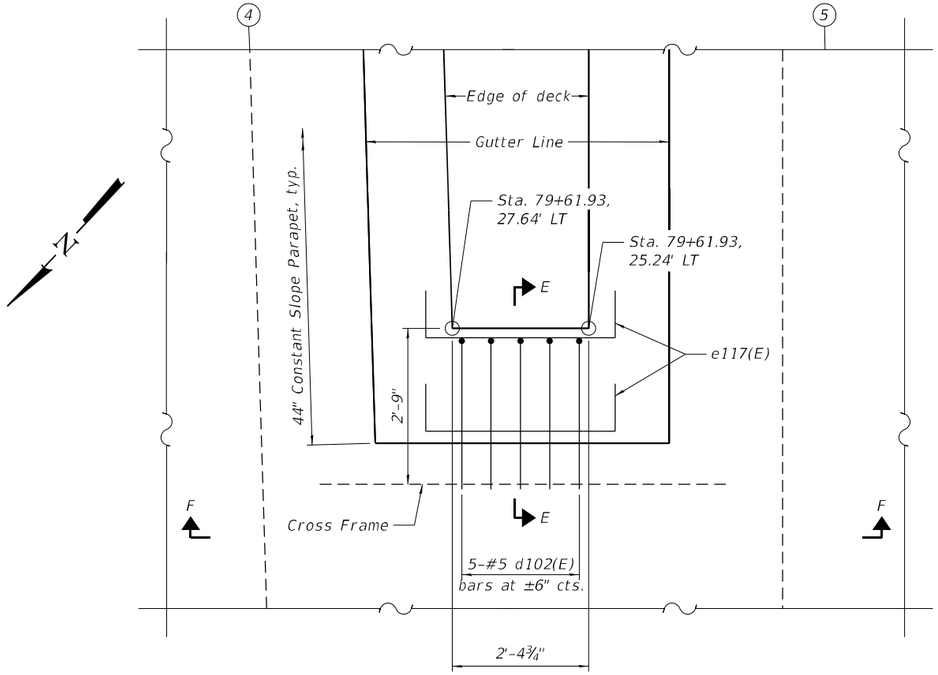

PLAN AT LT SPLIT

Deck drain not shown

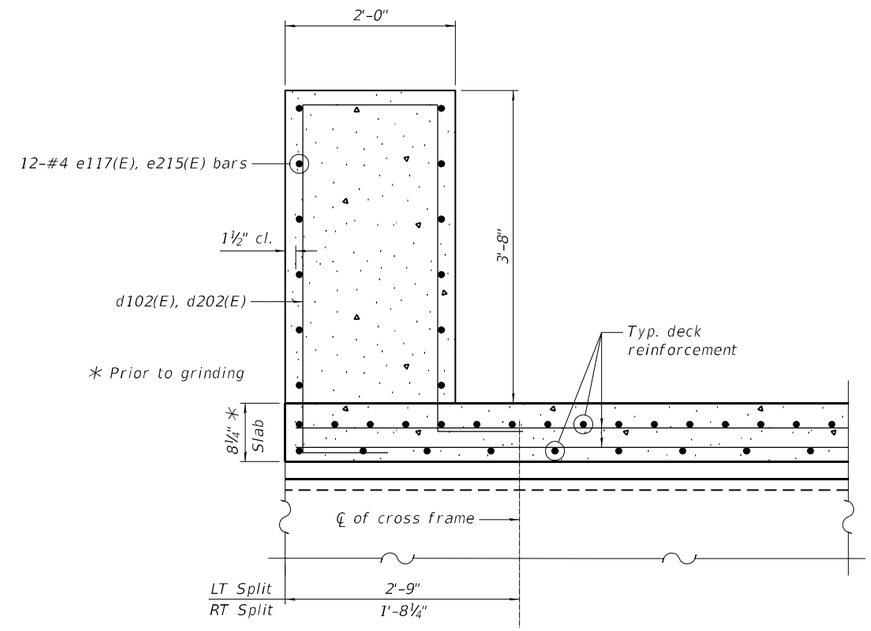

SECTION E-E

LT Split shown RT Split similar

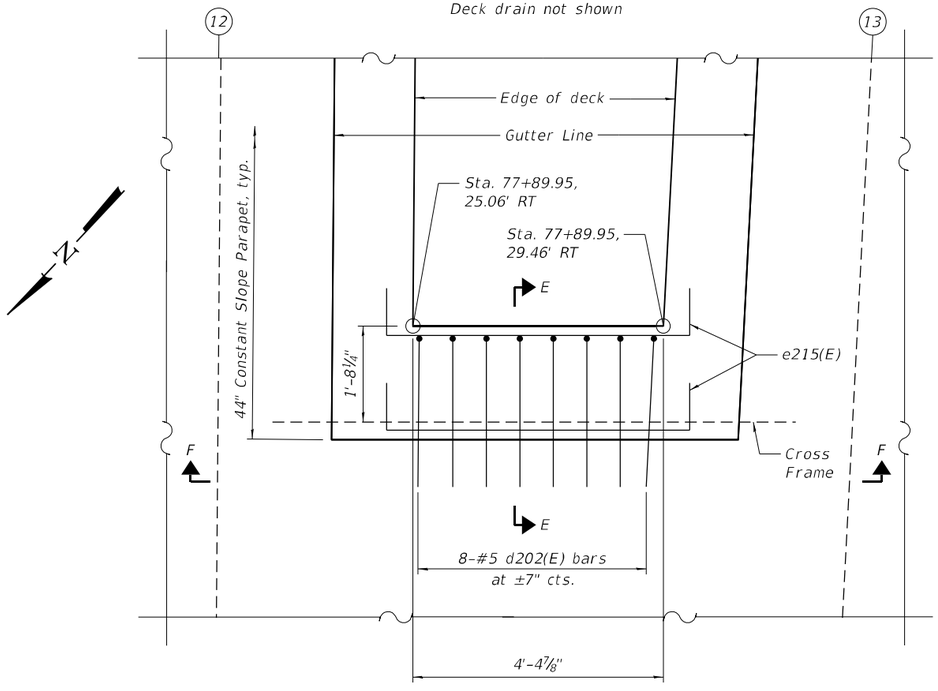

PLAN AT RT SPLIT

Deck drain not shown

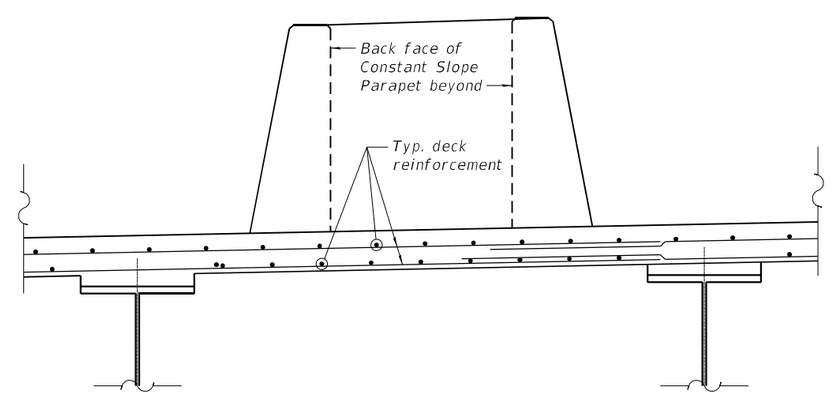

SECTION F-F

MODEL: Default
FILE NAME: pw:\\ms-us-pw.bentley.com:mb-us-pw-03\Documents\Chicago IL\01 Projects\179740 IDOT Cedar\SiExt PhII\5.0 CADD\CAD Sheets\0900182-68C55-073-SuperDet3.dgn

Michael Baker INTERNATIONAL
200 W Adams Street
Suite 1800
Chicago, IL 60606
P: 312.707.6970
FAX: 312.707.6604

USER NAME = DLamb	DESIGNED - TJN	REVISED -	
	CHECKED - DRH	REVISED -	
PLOT SCALE = 2,666656 ' / in.	DRAWN - TJN	REVISED -	
PLOT DATE = 6/6/2023	CHECKED - DRH	REVISED -	

STATE OF ILLINOIS
DEPARTMENT OF TRANSPORTATION

SUPERSTRUCTURE DETAILS 3
STRUCTURE NO. 090-0182

SHEET S-73 OF S-194 SHEETS

F.A.P. RTE.	SECTION	COUNTY	TOTAL SHEETS	SHEET NO.
VAR.	13 (HVB, HB-3) BR-1:R	TAZEWELL	1173	599
		CONTRACT NO. 68C55		
	ILLINOIS	FED. AID PROJECT		

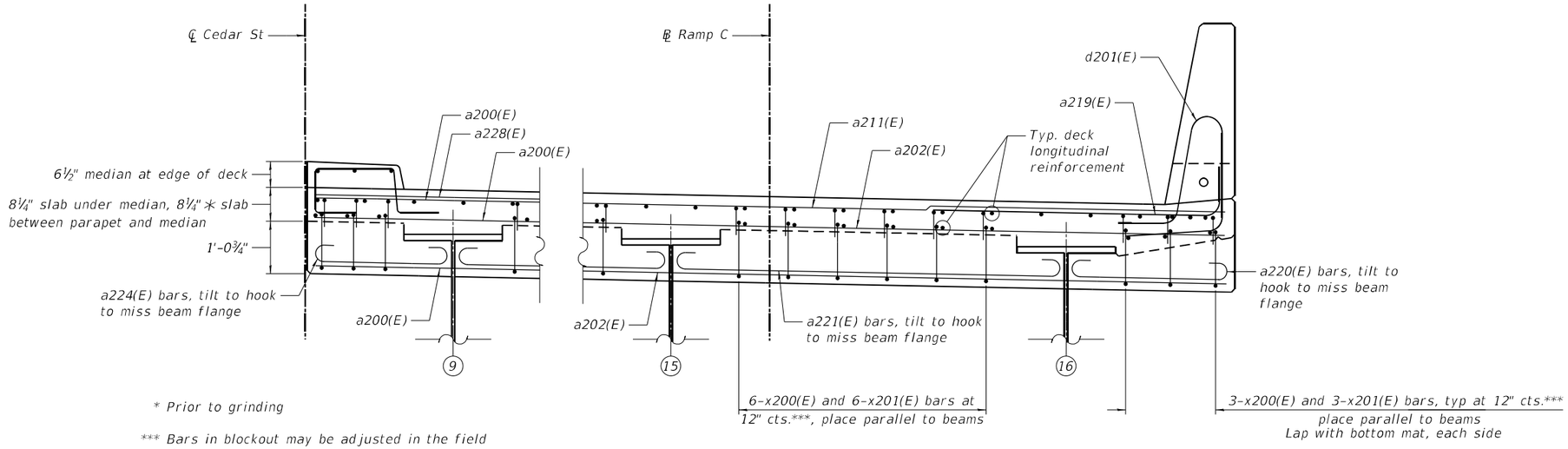

* Prior to grinding

*** Bars in blockout may be adjusted in the field if necessary to miss joint support boxes as approved by the Engineer. See sheets S-87 to S-91 and shop drawings for modular expansion joint. See Special Provisions.

DECK SECTION AT EXPANSION JOINT

Section at RT N. Abut shown, others similar

MODEL: Default
FILE NAME: pw:\\mbi-uscw.bentley.com:mbi-uscw-03\Documents\Chicago IL\01 Projects\179740 IDOT Cedar\Ext PhII\5.0 CADD\CAD Sheets\0900182-68C55-074-SuperDet4.dgn

Michael Baker INTERNATIONAL 200 W Adams Street Suite 1800 Chicago, IL 60606 P:+1 312.707.8770 FAX: 312.707.8804	USER NAME = DLamb	DESIGNED - TJN	REVISED -	STATE OF ILLINOIS DEPARTMENT OF TRANSPORTATION	SUPERSTRUCTURE DETAILS 4 STRUCTURE NO. 090-0182	F.A.P. RTE.	SECTION	COUNTY	TOTAL SHEETS	SHEET NO.
		CHECKED - DRH	REVISED -			VAR.	13 (HVB, HB-3) BR-1;R	TAZEWELL	1173	600
	PLOT SCALE = 2.666656 ' / in.	DRAWN - TJN	REVISED -					CONTRACT NO. 68C55		
	PLOT DATE = 6/6/2023	CHECKED - DRH	REVISED -		SHEET S-74 OF S-194 SHEETS		ILLINOIS	FED. AID PROJECT		