3-9-07 Letting, Item 117

STATE OF ILLINOIS
DEPARTMENT OF TRANSPORTATION
DIVISION OF HIGHWAYS

PROPOSED
FIBER OPTIC FACILITY

As Builts

ROUTE FAI 39 (I–39)
SECTION (141 /201) FIBER OPTICS
PROJECT
OGLE / WINNEBAGO COUNTIES
C–92–032–07

F.A.I. RTE.	SECTION	COUNTY	TOTAL SHEET SHEETS NO.
39	141/201	*	46

*OGLE/WINNEBAGO

CONTRACT NO. 64C83

D–92–015–07

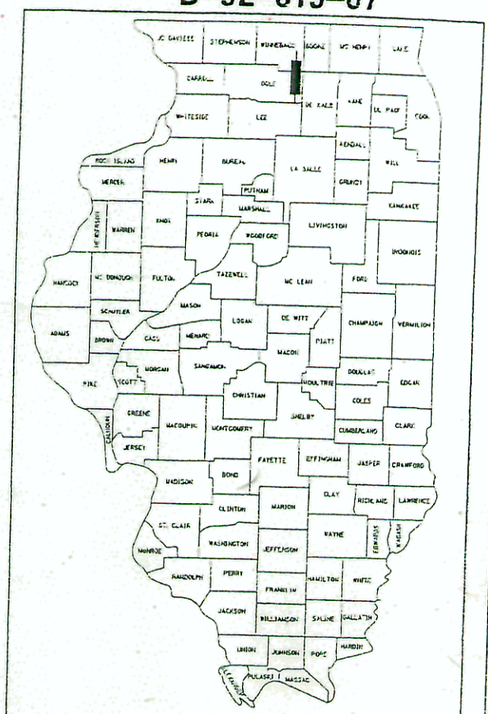

LOCATION OF SECTION INDICATED THUS:- ▬

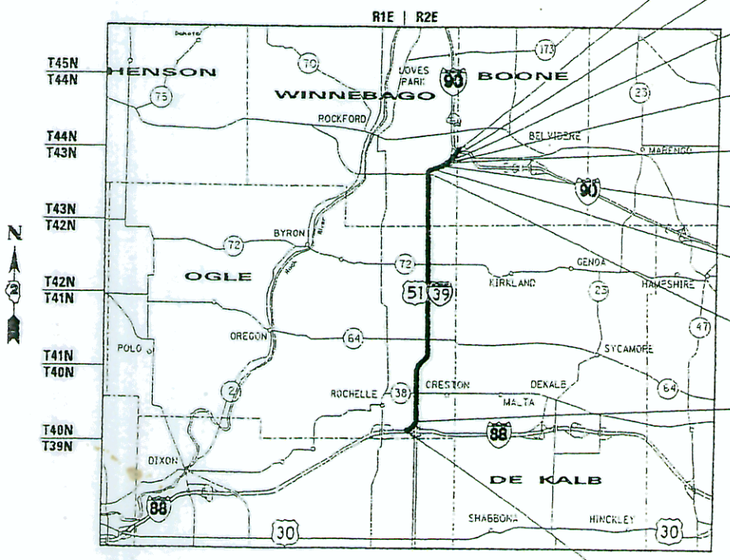

PROJECT ENDS
STA. 16+95 (I–90 SB ON RAMP)

STATION EQUATION #8
STA. 19+40 (I–90 SPUR)
STA. 0+00 (I–90 SB ON RAMP)

STATION EQUATION #7
STA. 893+25.98 (U.S. ROUTE 20 /I–39)
STA. 10+00 (I–90 SPUR)

STATION EQUATION #6
STA. 29+41.22 (RAMP DB)
STA. 891+55.86 (U.S. ROUTE 20 /I–39)

STATION EQUATION #5
STA. 30+00 (RAMP AD)
STA. 3+90 (RAMP DB)

STATION EQUATION #4
STA. 855+55 (U.S. ROUTE 20 /I–39)
STA. 0+00 (RAMP AD)

STATION EQUATION #3
STA. 72+14.51 (RAMP DB)
STA. 744+28.03 (U.S. ROUTE 20 /I–39)

STATION EQUATION #2
STA. 2543+88.01 (I–39)
STA. 31+00.00 (RAMP DB)

STATION EQUATION #1
STA. 0+00 (RAMP H)
STA. 1432+85.65 (I–39)

PROJECT BEGINS
STA. 42+30 (RAMP H)

GROSS LENGTH OF IMPROVEMENT 138,930.18' = 26.31 MILES
NET LENGTH OF IMPROVEMENT 138,930.18' = 26.31 MILES

100' 200' 300' — 1"= 100'
10' 20' 30' — 1"= 10'
50' 100' — 1"= 50'
50' 100' — 1"= 40'
50' 100' — 1"= 30'
50' 100' — 1"= 20'

FULL SIZE PLANS HAVE BEEN PREPARED USING STANDARD ENGINEERING SCALES. REDUCED SIZED PLANS WILL NOT CONFORM TO STANDARD SCALES. IN MAKING MEASUREMENTS ON REDUCED PLANS, THE ABOVE SCALES MAY BE USED.

J.U.L.I.E.
JOINT UTILITY LOCATION INFORMATION FOR EXCAVATION
1–800–892–0123

FOR INDEX OF SHEETS, SEE SHEET NO. 2
FOR LIST OF IDOT HIGHWAY STANDARDS, SEE SHEET NO. 2
FOR LIST OF IDOT DISTRICT–2 STANDARDS, SEE SHEET NO. 2

CONTRACT NO. 64C83

OGLE COUNTY
TOWNSHIP (SECTION)
DEMENT (4, 5, 8, 9, 16, 17, 20, 21, 28, 29, 32)
LYNNVILLE (4, 5, 8, 9, 16, 17, 20, 21, 28, 29, 32, 33)
MONROE (5, 8, 17, 20, 29, 32)

WINNEBAGO COUNTY
TOWNSHIP (SECTION)
ROCKFORD SOUTHEAST PART (9, 16, 17, 20, 29, 32)
CHERRY VALLEY (2, 3 9, 10)
ROCKFORD NORTHEAST PART (35)

SECTION (141/201)
TOWNSHIPS 39N, 40N, 41N, 42N, 43N, 44N
RANGE 2 EAST

Wight

Wight & Company
2500 North Frontage Road Darien, IL 60561
630.969.7000 630.969.7979 fax
Design Firm Registration 184-000451

PROJECT ENGINEER: MASOOD AHMAD
WIGHT & COMPANY: CRAIG CHAMBERS (630) 969–7000
LIAISON ENGINEER: SAMEER ABDULLAH (815) 284–5935

STATE OF ILLINOIS
DEPARTMENT OF TRANSPORTATION
DIVISION OF HIGHWAYS

SUBMITTED December 15 20 06
Joseph E. Cannon
DEPUTY DIRECTOR OF HIGHWAYS, REGION ENGINEER
February 2 20 07
Eric E. Harm PE
Interim ENGINEER OF DESIGN AND ENVIRONMENT
February 2 20 07
Milton R. Sees, P.E. S.E.
DIRECTOR OF HIGHWAYS, CHIEF ENGINEER

PRINTED BY THE AUTHORITY
OF THE STATE OF ILLINOIS

CONTRACT NO. 64C83

F.A.I. RTE.	SECTION	COUNTY	TOTAL SHEETS	SHEET NO.
39	141 & 201	*	46	2
STA.	TO STA.			
FED. ROAD DIST. NO.	ILLINOIS	FED. AID PROJECT		

*OGLE / WINNEBAGO

INDEX OF SHEETS

SHEETS	TITLE
1	COVER SHEET
2	INDEX OF SHEETS / LIST OF HIGHWAY STANDARDS
3	SUMMARY OF QUANTITIES
4	SCHEDULE OF QUANTITIES
5	GENERAL CONSTRUCTION NOTES
6	TYPICAL SECTIONS
7-8	FIBER PLAN: RAMP H (STA. 42+30 - STA. 0+00) I-39 (STA. 1432+85.65 - STA. 1480+00)
9-30	FIBER PLAN: I-39 (STA. 1480+00 - STA. 2510+00)
31-32	FIBER PLAN: I-39 (STA. 2510+00 - STA. 2543+88.01) RAMP DB (STA. 31+00 - 72+14.51) U.S. ROUTE 20 / I-39 (STA. 744+28.03 - STA. 755+00)
33	FIBER PLAN: U.S. ROUTE 20 / I-39 (STA. 755+00 - STA. 836+00)
34-35	FIBER PLAN: U.S. ROUTE 20 / I-39 (STA. 836+00 - STA. 855+55) RAMP AD (STA. 0+00 - STA. 30+00) RAMP DB (STA. 3+90 - STA. 29+41.22) U.S. ROUTE 20 / I-39 (STA. 891+55.86 - STA. 893+26)
36	FIBER PLAN: I-90 SPUR (STA. 10+00 - STA. 19+40) I-90 SB ON RAMP (STA. 0+00 - STA. 16+95)
37	DETAILS: TYPICAL ROAD CROSSING; TYPICAL BORES; TYPES OF BURY
38	DETAILS: TYPICAL ROCK SAW PROFILE; TYPICAL DRAINAGE DITCH CROSSING; UTILITY AVOIDANCE; HANDHOLE SPECIFICATIONS
39	DETAILS: DRAINAGE LINE REPAIR; TRENCHING DETAIL AND HANDHOLE INSTALLATION
40	DETAILS: HANDHOLE AND LOCATE MARKER LOCATION AND WARNING SIGN INSTALLATION PROCEDURE; EXISTING CULVERT CROSSING
41	DETAILS: TYPICAL FOR PARALLELING EXISTING FIBER
42	DETAILS: FUSION COUPLING DETAILS
43	KISHWAUKEE RIVER BRIDGE ATTACHMENT DETAILS
44	BRIDGE ATTACHMENT DETAILS
45	MISCELLANEOUS BRIDGE ATTACHMENT DETAILS
46	STORM WATER POLLUTION PREVENTION PLAN 2.1

IDOT DIST 2 STANDARD

STD. NO.	TITLE
2.1	STORM WATER POLLUTION PREVENTION PLAN EROSION CONTROL PLAN (DIST STD 2.1

IDOT HIGHWAY STANDARDS

STD NO.	TITLE
280001-03	TEMPORARY EROSION CONTROL SYSTEM
664001-01	CHAIN LINK FENCE
665001-01	WOVEN WIRE FENCE
701101-01	OFF-ROAD OPERATIONS, MULTILANE, 4.5m (15' TO 600mm (24") FROM PAVEMENT EDGE
701106-01	OFF-ROAD OPERATIONS, MULTILANE, MORE THAN 4.5m (15') AWAY
701400-02	APPROACH TO LANE CLOSURE FREEWAY/EXPRESSWAY
701406-04	LANE CLOSURE, FREEWAY/EXPRESSWAY, DAY OPERATING ONLY
701426-02	LANE CLOSURE, MULTILANE, INTERMITTENT OR MOVING OPERATION, FOR SPEEDS ≥ 45 MPH TO 55 MPH
702001-06	TRAFFIC CONTROL DEVICES
720011	METAL POSTS FOR SIGNS, MARKERS AND DELINEATORS
728001	TELESCOPING STEEL SIGN SUPPORT
729001	APPLICATIONS OF TYPES A AND B METAL POSTS (FOR SIGNS AND MARKERS)
000001-04	STANDARD SYMBOLS, ABBREVIATIONS AND PATTERNS

ISTHA STANDARDS

DWG. NO.	STD. NO.	TITLE
D5	SD 03-9A	SYMBOLS AND PATTERNS (SHEET 1 OF 5)
D6	SD 03-9A	SYMBOLS AND PATTERNS (SHEET 2 OF 5)
D7	SD 03-9A	SYMBOLS AND PATTERNS (SHEET 3 OF 5)
D8	SD 03-9A	SYMBOLS AND PATTERNS (SHEET 4 OF 5)
D9	SD 03-9A	SYMBOLS AND PATTERNS (SHEET 5 OF 5)
E4	SD 04-11B	CONSTRUCTION SIGNS II (SHEET 1 OF 2)
E5	SD 03-11B	CONSTRUCTION SIGNS II (SHEET 2 OF 2)
E6	SD 04-11C	CONSTRUCTION SIGNS III
E7	SD 03-11D	CONSTRUCTION SIGNS IV (SHEET 1 OF 2)
E8	SD 03-11D	CONSTRUCTION SIGNS IV (SHEET 2 OF 2)
K1	ESC-03-01	TEMPORARY EROSION AND SEDIMENT CONTROLS (SHEET 1 OF 12)
K4	ESC-03-01	TEMPORARY EROSION AND SEDIMENT CONTROLS (SHEET 4 OF 12)
K5	ESC-03-01	TEMPORARY EROSION AND SEDIMENT CONTROLS (SHEET 5 OF 12)

REVISIONS NAME	DATE

ILLINOIS DEPARTMENT OF TRANSPORTATION

INDEX OF SHEETS / LIST OF HIGHWAY STANDARDS

SCALE: VERT. N/A
HORIZ. N/A
DATE DECEMBER 15, 2006

DRAWN BY CKL
CHECKED BY CAC

PLOT DATE = 12/14/2006
FILE NAME = G:\ENG\06 6798-13 IDOT\Sht\SH1002.Index.dgn
PLOT SCALE = #SCALE#
USER NAME = #USER#

CONTRACT NO. 64083

F.A. RTE.	SECTION	COUNTY	TOTAL SHEETS	SHEET NO.
35	141/201	*	46	3
STA.	TO STA.			
FED. ROAD DIST. NO.	ILLINOIS	FED. AID PROJECT		

* OGLE/ WINNEBAGO

SUMMARY OF QUANTITIES

	PAY CODE NO.	PAY ITEM	UNIT	TOTAL QUANTITY	100% STATE Y032-1F OGLE COUNTY	100% STATE Y032-1F WINNEBAGO COUNTY
	20800150	TRENCH BACKFILL	CU YD	31	31	0
*	21101615	TOPSOIL FURNISH AND PLACE, 4"	SQ YD	29,110	20,517	8,593
*	25000210	SEEDING, CLASS 2A	ACRE	6	4	2
*	25000400	NITROGEN FERTILIZER NUTRIENT	POUND	540	380	160
*	25000500	PHOSPHORUS FERTILIZER NUTRIENT	POUND	540	380	160
*	25000600	POTASSIUM FERTILIZER NUTRIENT	POUND	540	380	160
	28000250	TEMPORARY EROSION CONTROL SEEDING	POUND	4,213	2,665	1,548
	50200400	ROCK EXCAVATION FOR STRUCTURES	CU YD	1,259.1	514.7	744.4
	60100915	PIPE DRAINS, 6"	FOOT	12	12	0
	60100925	PIPE DRAINS, 8"	FOOT	4	4	0
	61100500	EXPLORATION TRENCH 52" DEPTH	FOOT	16	16	0
	67100100	MOBILIZATION	L SUM	1	.67	.33
	67000400	ENGINEERS FIELD OFFICE, TYPE A	CAL MO	8	5	3
	70100700	TRAFFIC CONTROL AND PROTECTION, STANDARD 701406	L SUM	1	.67	.33
	81017515	CONDUIT IN TRENCH, 1 1/4" DIA., COILABLE NON-METALLIC CONDUIT	FOOT	50,970	20,820	30,150
	81028040	CONDUIT, BORED AND PULLED, COILABLE NON-METALLIC CONDUIT, 1 1/4"	FOOT	37,820	29,420	8,400
	XX005765	FIBER OPTIC HANDHOLE	EACH	80	51	29
	81900200	TRENCH AND BACKFILL FOR ELECTRICAL WORK	FOOT	16,990	6,940	10,050
	Z0020900	ESTABLISHING AND REFERENCING LAND SECTION MARKERS	EACH	97	60	37
	Z0048665	RAILROAD PROTECTIVE LIABILITY INSURANCE	L SUM	1	.37	.63
	X0325690	ARMORED LOOSE TUBE ENHANCED SINGLE-MODE FIBER OPTIC CABLE-DOUBLE JACKET/SINGLE ARMOR, 96 STRAND	FOOT	442,530	294,960	147,570
	X0325700	CONDUIT ATTACHED TO BRIDGE STRUCTURE, 4", FIBERGLASS REINFORCED EPOXY, SPECIAL	FOOT	3,085	1,140	1,945

* Specialty Item

SPLICES

HH # 8
HH # 15
HH # 19
HH # 28
HH # 33
HH # 36
HH # 37 – 1 CABLE ONLY
HH # 44
HH # 49
HH # 58
HH # 63
HH # 67
HH # 71

NOTE:

1. THE COILABLE NON-METALLIC CONDUIT (1-1/4") IS COMPRISED OF A HIGH DENSITY POLYETHYLENE (HDPE) AS DEFINED IN ARTICLE 1088.03(c) OF THE STANDARD SPECIFICATIONS FOR ROAD AND BRIDGE CONSTRUCTION, ADOPTED JANUARY 1, 2007.

REVISIONS NAME	DATE

ILLINOIS DEPARTMENT OF TRANSPORTATION

SUMMARY OF QUANTITIES

SCALE: VERT. HORIZ.
DATE
DRAWN BY
CHECKED BY

PLOT DATE = Mon Dec 18 16:58:42 2006
FILE NAME = N:\dot\1000\Submittals\sum.dgn
PLOT SCALE = 1.0547 '/ IN.
USER NAME = abdullahm

SCHEDULE OF QUANTITIES

CONTRACT NO. 64C83

F.A.I. RTE.	SECTION	COUNTY	TOTAL SHEETS	SHEET NO.
39	14 / 20)	*	4E	4
STA.	TO STA.			
FED. ROAD DIST. NO.	ILLINOIS	FED. AID PROJECT		

*OGLE / WINNEBAGO

AGRICULTURAL FIELD TILE REPAIR SCHEDULE

STATION	OFFSET	20800150 TRENCH BACKFILL	60100915 PIPE DRAINS 6"	60100925 PIPE DRAINS 8"	61100500 EXPLORATION TRENCH, 52 IN. DEPTH
		CU. YD.	FOOT	FOOT	FOOT
2238+35	160' LT	7.75		4	4
2245+35	170' LT	7.75	4		4
2247+35	160' LT	7.75	4		4
2262+35	170' LT	7.75	4		4
SUB-TOTAL		31.0	12	4	16

1-1/4" CONDUIT IN AREAS OF ROCK EXCAVATION SCHEDULE

STATION FROM	OFFSET	STATION TO	OFFSET	50200400 ROCK EXCAVATION FOR STRUCTURES	81017515 CONDUIT IN TRENCH, 1-1/4" DIA. COILABLE NON-METALLIC CONDUIT	81900200 TRENCH AND BACKFILL FOR ELECTRICAL WORK
				CU. YD.	FOOT	FOOT
1560+00	LT	1567+00	LT	51.9	(3)(700) = 2100	700
1711+40	LT	1722+90	LT	85.2	(3)(1150) = 3450	1150
1788+00	LT	1793+10	LT	37.8	(3)(510) = 1530	510
1795+60	LT	1814+00	LT	136.8	(3)(1840) = 5520	1840
2203+60	LT	2218+00	LT	106.7	(3)(1440) = 4320	1440
2283+50	LT	2296+50	LT	96.3	(3)(1300) = 3900	1300
2352+00	LT	2380+00	LT	218.9	(3)(2955) = 8865	2955
2389+90	LT	2418+35	LT	210.7	(3)(2845) = 8535	2845
2480+00	RT	2510+00	RT	222.2	(3)(3000) = 9000	3000
2522+00	RT	2534+00	RT	92.6	(3)(1250) = 3750	1250
			SUB-TOTAL	1259.1	50970 (SEE NOTE *1)	16990

NOTE *1: THREE 1-1/4" DIAMETER COILABLE NON-METALLIC CONDUITS PLACED WITHIN THE TRENCH AREAS

FIBER OPTIC HANDHOLE SCHEDULE

STATION	OFFSET	XX005765 FIBER OPTIC HANDHOLE	STATION	OFFSET	XX005765 FIBER OPTIC HANDHOLE	STATION	OFFSET	XX005765 FIBER OPTIC HANDHOLE
		EACH			EACH			EACH
10+15 (RAMP H)	115' LT	1	1834+75	120' LT	1	2388+20	115' LT	1
1450+00	135' LT	1	1861+90	185' LT	1	2406+75	115' LT	1
1464+50	95' LT	1	1883+25	120' LT	1	2418+50	130' LT	1
1480+20	90' LT	1	1913+30	120' LT	1	2418+50	80' RT	1
1484+50	90' LT	1	1935+25	85' LT	1	2431+00	80' RT	1
1509+00	205' LT	1	1941+25	85' LT	1	2450+00	155' RT	1
1509+50	105' LT	1	1965+40	95' LT	1	2467+60	80' RT	1
1515+90	125' LT	1	1991+70	145' LT	1	2468+60	90' RT	1
1516+55	675' LT	1	2013+80	140' LT	1	2491+50	140' RT	1
1516+55	700' RT	1	2044+60	125' LT	1	2515+00	130' RT	1
1529+00	200' LT	1	2071+35	115' LT	1	2537+50	140' RT	1
1543+65	155' LT	1	2098+05	140' LT	1	47+46 (RAMP DB)	20' RT	1
1569+00	150' LT	1	2110+15	80' LT	1	49+00	20' RT	1
1596+70	170' LT	1	2112+25	80' LT	1	754+10 (U.S. 20)	100' RT	1
1624+00	210' LT	1	2123+70	200' LT	1	780+00	110' RT	1
1648+00	250' LT	1	2123+70	120' RT	1	795+20	55' RT	1
1663+00	130' LT	1	2150+50	180' LT	1	797+35	55' RT	1
1686+15	160' LT	1	2177+50	182' LT	1	814+20	130' RT	1
1703+85	120' LT	1	2198+00	150' LT	1	831+75	55' RT	1
1729+90	140' LT	1	2217+25	120' LT	1	834+60	55' RT	1
1756+35	155' LT	1	2230+50	120' LT	1	860+00	105' RT	1
1773+35	330' LT	1	2255+20	100' LT	1	30+00 (RAMP AD)	60' RT	1
1774+30	205' LT	1	2283+50	170' LT	1	3+90 (RAMP DB)	90' RT	1
1781+85	150' LT	1	2309+00	141' LT	1	16+00 (RAMP DB)	100' RT	1
1781+85	800' LT	1	2335+00	140' LT	1	14+00 (RAMP)	150' RT	1
1781+85	850' RT	1	2356+20	500' LT	1	16+65 (I-90)	100' RT	1
1809+00	170' LT	1	2369+00	460' LT	1			
							SUB-TOTAL	80

4" CONDUIT ATTACHED TO BRIDGE SCHEDULE

STATION FROM	OFFSET	STATION TO	OFFSET	2001376* CONDUIT ATTACHED TO BRIDGE STRUCTURE, 4", FIBERGLASS REINFORCED EPOXY, SPECIAL
				FOOT
1480+20	90' LT	1464+50	90' LT	430
1936+25	85' LT	1941+25	85' LT	500
2110+15	80' LT	2112+25	80' LT	210
2418+60	80' RT	2430+90	80' RT	1230
2467+60	80' RT	2468+60	80' RT	100
47+50 (RAMP DB)	20' RT	48+95 (RAMP DB)	20' RT	145
795+50 (U.S. 20)	55' RT	797+35 (U.S. 20)	55' RT	185
831+75 (U.S. 20)	55' RT	834+60 (U.S. 20)	55' RT	285
SUB-TOTAL				3085 (SEE NOTE *2)

NOTE *2: ONE 4" CONDUIT IS ATTACHED TO BRIDGE STRUCTURES FOUR 1-1/4" DIAMETER COILABLE NON-METALLIC CONDUITS ARE PLACED WITHIN THE 4" CONDUITS ATTACHED TO BRIDGE STRUCTURES. MATERIAL AND INSTALLATION OF COILABLE NON-METALLIC CONDUITS ARE INCIDENTAL TO THE 4" CONDUIT (2001376*)

1-1/4" CONDUIT, PLACED BY DIRECTIONAL BORING SCHEDULE

STATION FROM	OFFSET	STATION TO	OFFSET	81028040 CONDUIT, BORED AND PULLED, COILABLE NON-METALIC CONDUIT, 1-1/4"
				FOOT
28+25 (RAMP H)	90' LT	27+50 (RAMP H)	90' LT	(4)(75) = 300
1427+00 (I-39)	200' LT	1428+50 (I-39)	180' LT	(4)(250) = 1000
1450+50	135' LT	1452+30	135' LT	(4)(180) = 720
1463+80	95' LT	1464+50	95' LT	(4)(70) = 280
1509+00	205' LT	1509+50	105' LT	(4)(120) = 480
1515+90	125' LT	1518+35	125' LT	(4)(245) = 980
1515+90	125' LT	1515+90	125' RT	(4)(250) = 1000
1516+45	580' RT	1515+55	700' RT	(4)(120) = 480
1516+45	575' LT	1516+55	675' LT	(4)(100) = 400
1525+00	150' LT	1526+50	185' LT	(4)(150) = 600
1569+00	150' LT	1571+00	150' LT	(4)(200) = 800
1621+50	210' LT	1623+70	210' LT	(4)(220) = 880
1648+00	250' LT	1650+00	180' LT	(4)(210) = 840
1655+50	140' LT	1656+50	140' LT	(4)(100) = 400
1683+10	165' LT	1686+10	160' LT	(4)(300) = 1200
1702+85	120' LT	1703+85	120' LT	(4)(100) = 400
1762+45	160' LT	1764+45	160' LT	(4)(200) = 800
1773+35	330' LT	1774+30	205' LT	(4)(150) = 600
1781+85	150' LT	1783+35	150' LT	(4)(150) = 600
1781+85	150' LT	1781+85	130' RT	(4)(280) = 1120
1781+85	700' LT	1781+85	800' LT	(4)(100) = 400
1781+85	750' RT	1781+85	850' RT	(4)(100) = 400
1793+10	120' RT	1795+60	100' LT	(4)(250) = 1000
1819+25	170' LT	1820+50	170' LT	(4)(150) = 600
1834+75	130' LT	1836+25	130' LT	(4)(150) = 600
1852+75	170' LT	1855+25	190' LT	(4)(250) = 1000
1913+30	120' LT	1915+20	115' LT	(4)(190) = 760
1966+40	95' LT	1968+40	95' LT	(4)(200) = 800
1983+25	140' LT	1984+75	140' LT	(4)(150) = 600
1991+70	145' LT	1992+70	130' LT	(4)(100) = 400
2044+60	125' LT	2045+70	125' LT	(4)(110) = 440
2064+25	150' LT	2065+75	150' LT	(4)(150) = 600
2079+50	140' LT	2080+50	140' LT	(4)(100) = 400
2123+70	200' LT	2125+70	200' LT	(4)(200) = 800
2123+70	200' LT	2123+70	115' RT	(4)(315) = 1260
2131+50	190' LT	2132+50	190' LT	(4)(100) = 400
2136+30	150' LT	2137+30	190' LT	(4)(200) = 800
2168+55	125' LT	2170+05	135' LT	(4)(150) = 600
2181+00	150' LT	2182+50	125' LT	(4)(150) = 600
2198+00	150' LT	2199+50	150' LT	(4)(150) = 600
2237+30	160' LT	2238+50	160' LT	(4)(150) = 600
2255+00	160' LT	2256+20	110' LT	(4)(150) = 600
2256+20	110' LT	2257+90	110' LT	(4)(170) = 680
2296+40	144' LT	2297+90	144' LT	(4)(150) = 600
2311+20	140' LT	2312-70	140' LT	(4)(150) = 600
2315+80	140' LT	2316+80	140' LT	(4)(100) = 400
2335+00	140' LT	2336+00	140' LT	(4)(100) = 400
2356+20	500' LT	2357+00	405' LT	(4)(100) = 400
2361+30	120' LT	2363+30	120' LT	(4)(200) = 800
2368+70	380' LT	2369+00	460' LT	(4)(100) = 400
2380+50	150' LT	2381+50	150' LT	(4)(100) = 400
2388+20	110' LT	2389+90	110' LT	(4)(170) = 680
2418+50	130' LT	2418+50	80' RT	(4)(210) = 840
2487+20	140' RT	2489-70	140' RT	(4)(150) = 200
46+20 (RAMP DB)	70' RT	46+46 (RAMP DB)	20' RT	(4)(140) = 560
749+20 (U.S. 20)	132' RT	750+00 (U.S. 20)	100' RT	(4)(90) = 360
753+90	100' RT	754+10	100' RT	(4)(120) = 480
811+00	130' RT	814+20	130' RT	(4)(320) = 1280
30+00 (RAMP AD)	60' RT	3+90 (RAMP AD)	90' RT	(4)(150) = 600
			SUB-TOTAL	37820 (SEE NOTE *3)

NOTE *3: FOUR 1-1/4" DIAMETER COILABLE NON-METALLIC CONDUITS ARE PLACED IN AREAS OF DIRECTIONAL BORING

NOTE:

1. THE COILABLE NON-METALLIC CONDUIT (1-1/4") IS COMPRISED OF A HIGH DENSITY POLYETHYLENE (HDPE) AS DEFINED IN ARTICLE 1088.03(c) OF THE STANDARD SPECIFICATIONS FOR ROAD AND BRIDGE CONSTRUCTION, ADOPTED JANUARY 1, 2007.

REVISIONS NAME	DATE

ILLINOIS DEPARTMENT OF TRANSPORTATION

SCHEDULE OF QUANTITIES

SCALE: VERT. N/A
HORIZ. N/A
DATE DECEMBER 15, 2006

DRAWN BY CKL
CHECKED BY CAC

PLOT DATE = 12/14/2006
FILE NAME = c:\projects\64c83 6790-13 100\civil\sht\SHT004.dgn
PLOT SCALE = $SCALE$
USER NAME = $USER$

CONTRACT NO. 64C8

F.A.I. RTE.	SECTION	COUNTY	TOTAL SHEETS	SH. NO.
39	141 / 201	*	46	

STA. TO STA.

FED. ROAD DIST. NO. ILLINOIS FED. AID PROJECT

* OGLE / WINNEBAGO

GENERAL CONSTRUCTION NOTES

CONSTRUCTION NOTES

1. COIL 50 FEET FROM EACH CABLE REEL IN HANDHOLES.
2. SHORING OF BORE-PITS AND TRENCHES IN ACCORDANCE WITH OSHA REGULATIONS IS MANDATORY.
3. UNDERGROUND 1-1/4" DIAMETER HIGH DENSITY POLYETHYLENE (HDPE) CONDUITS SHALL BE PLACED AT 42" MINIMUM COVER UNLESS OTHERWISE SPECIFIED ON THE CONSTRUCTION DRAWINGS. UNDERGROUND 4" DIAMETER FIBERGLASS REINFORCED EPOXY (FRE) CONDUITS SHALL BE PLACED AT 36" MINIMUM COVER UNLESS OTHERWISE SPECIFIED.
4. ALL DIRECT BURIED CABLE SHALL BE PLACED AT 42" MINIMUM COVER UNLESS OTHERWISE SPECIFIED ON THE CONSTRUCTION DRAWINGS.
5. THE MINIMUM COVER UNDER A PUBLIC ROADWAY SHALL BE 42" OR SUCH GREATER DEPTH AS MAY BE REQUIRED TO CLEAR THE PAVEMENT STRUCTURE.
6. ALL CONDUITS SHALL BE EITHER HIGH DENSITY POLYETHYLENE (HDPE) OR FIBERGLASS REINFORCED (FRE) AND PLACED AS DIRECTED BY THE PLANS AND SPECIFICATIONS.
7. PLACEMENT OF WARNING TAPE AS SHOWN ON CONSTRUCTION DETAILS SHALL BE INCLUDED WITH THE INSTALLATION OF THE FIBER OPTIC CABLES AT NO ADDITIONAL COST.

GENERAL NOTES

1. ALL WORK TO BE PERFORMED IN STRICT ACCORDANCE WITH THE APPLICABLE CODES OR REQUIREMENTS OF ANY REGULATING GOVERNMENTAL AGENCY OR THE RIGHT-OF-WAY GRANTOR.
2. LOCATIONS OF SOME OF THE PHYSICAL FEATURES WERE OBTAINED FROM DATED OR OTHER DRAWINGS AND MAY NOT BE AS SHOWN OR DEPICTED ON THESE DRAWINGS.
3. ANY AND ALL IMPROVEMENTS, SUCH AS ASPHALT OR CONCRETE PAVEMENTS, CURBS, GUTTERS, WALKS, DRAINAGE, SODS, ETC., IF DAMAGED, SHALL BE RESTORED TO ORIGINAL OR BETTER CONDITION WITHIN 24 HOURS OR AS SOON AS PRACTICALLY POSSIBLE. TEMPORARY REPAIRS MAY BE REQUIRED AS DIRECTED BY ON SITE ENGINEER FOR SAFETY CONCERNS.
4. EQUIPMENT TYPES SPECIFIED HEREIN (I.E. "BACK HOE" "SWAMP PLOW" ETC.) ARE SUGGESTIONS ONLY AND ARE NOT INTENDED AS REQUIREMENTS. CONTRACTORS AND SUBCONTRACTORS WILL BE NOTIFIED AS TO EXCEPTIONS.
5. NOT ALL UTILITIES ARE SHOWN ON THE PRINTS. IT IS THE RESPONSIBILITY OF THE CONTRACTOR TO LOCATE ALL UTILITIES. A MINIMUM 12" SEPARATION BETWEEN CONDUIT AND OTHER UTILITIES WILL BE MAINTAINED UNLESS APPROVED BY ENGINEER ON SITE. MARKERS SHALL BE PLACED AT 1000' INTERVALS AND AT CHANGES IN CABLE LOCATION/DIRECTION OR TO MARK THE LOCATION OF HANDHOLES. THE CONTRACTOR SHALL ADJUST EXCAVATION AS NECESSARY TO AVOID HIDDEN OBSTACLES AND TO MAINTAIN MAXIMUM DISTANCE FROM THE EDGE OF PAVEMENT. ALL DEVIATIONS SHALL BE APPROVED BY THE ENGINEER.
6. TREE PRUNING: ANY TREE BRANCHES BROKEN OR DAMAGED DUE TO THE FIBER OPTIC CABLE INSTALLATIONS SHALL BE PRUNED BACK TO THE NEAREST BRANCH UNION ON SOUND WOOD AND SHALL BE INCLUDED WITH COST OF THE FIBER OPTIC CABLE INSTALLATION.
7. TREE REMOVAL: TREES AUTHORIZED FOR REMOVAL BY IDOT SHALL BE EITHER GRUBBED OUT COMPLETELY OR CUT OFF FLUSH WITH GROUND LEVEL. STUMPS REMAINING SHALL BE TREATED WITH TRICLOPYR TO PREVENT RESPROUTING. HERBICIDE TREATMENTS SHALL BE IN ACCORDANCE WITH LABEL DIRECTIONS AND ALL APPLICABLE STATE AND FEDERAL LAWS AND REGULATIONS.
8. ALL DEBRIS RESULTING FROM THE INSTALLATION OF THE CABLE, INCLUDING TRASH, TREE LIMBS, BRUSH, WASTE MATERIALS, ETC., SHALL BE REMOVED FROM THE RIGHT-OF-WAY AND LEGALLY DISPOSED OF BY THE CONTRACTOR.
9. THE CONTRACTOR SHALL BE RESPONSIBLE FOR THE PROTECTION AND THE MAINTENANCE OF PUBLIC AND PRIVATE PROPERTIES. THE CONTRACTOR SHALL PROTECT, SHORE, BRACE, SUPPORT AND MAINTAIN ALL UTILITIES, ALL UNDERGROUND PIPES, CONDUITS DRAINS, FIELD TILES AND OTHER SUBSURFACE OBSTRUCTIONS UNCOVERED OR OTHERWISE AFFECTED BY THE CONSTRUCTION WORK ASSOCIATED WITH INSTALLATION OF THE PROPOSED FIBER OPTIC SYSTEM. APPARENT PIPELINES, SEWERS, CULVERTS, DRAINS, CABLES, AND OTHER EXISTING SUBSURFACE STRUCTURES ARE INDICATED ON THE DRAWINGS. IDOT DOES NOT GUARANTEE THE ACCURACY OF SUCH INFORMATION. OWNERS OF PIPES, CABLES, FIELD TILES AND OTHER BURIED UTILITIES SHALL BE NOTIFIED BY THE CONTRACTOR IN ADVANCE OF ANY EXCAVATION WORK AND REQUESTED TO LOCATE AND EXPOSE UTILITIES. THIS SHALL BE DONE BY CONTACTING JULIE #1-800-892-0123 AND INDIVIDUAL CONTACTS AS REQUIRED. ANY EXPENSE TO THE CONTRACTOR DUE TO ENCOUNTERING SUBSURFACE OBSTRUCTIONS NOT SHOWN, OR IN LOCATIONS DIFFERENT THEN THOSE INDICATED ON THE DRAWINGS SHALL NOT CONSTITUTE A CLAIM FOR PAYMENT. THE CONTRACTOR SHALL MAINTAIN A LOG OF ALL UTILITY CONTACTS MADE DURING THIS PROJECT AND TRANSMIT THE LOG BOOK TO IDOT UPON COMPLETION OF THE PROJECT.

THE CONTRACTOR SHALL BE RESPONSIBLE FOR PROTECTING ALL UTILITY PROPERTY DURING CONSTRUCTION OPERATIONS AS OUTLINED IN ARTICLE 107.31 OF THE STANDARD SPECIFICATIONS, EVEN THOUGH THEY MAY OR MAY NOT BE SHOWN ON THE PLANS. ANY DAMAGE CAUSED BY THE CONSTRUCTION OPERATIONS SHALL BE IMMEDIATELY REPAIRED OR REPLACED TO THE SATISFACTION OF THE ENGINEER OR OWNER. THIS WORK SHALL BE AT THE CONTRACTOR'S EXPENSE. THE J.U.L.I.E. TELEPHONE NUMBER IS (800)892-0123. A MINIMUM OF 48 HOURS ADVANCE NOTICE IS REQUIRED FOR ALL NON-EMERGENCY WORK. KNOWN UTILITIES LOCATED WITHIN THE PROJECT LIMITS OR IMMEDIATELY ADJACENT TO THE PROJECT CONSTRUCTION LIMITS ARE LISTED BELOW. UTILITIES WHICH ARE NOT MEMBERS OF J.U.L.I.E. SHOULD BE NOTIFIED INDIVIDUALLY BY THE CONTRACTOR.

AT&T COMMUNICATIONS, INC.
866 ROCK CREEK ROAD
PLANO, IL 60545
(630)-552-4677

COMMONWEALTH EDISON COMPANY
123 ENERGY AVE.
ROCKFORD, IL 61109
(630)-437-2129

VERIZON
112 WEST ELM STREET
SYCAMORE, IL 60178
(815)-895-1515

AT&T
635 18TH STREET
ROCK ISLAND, IL 61201
(309)-793-4456

NICOR GAS CO.
1844 FERRY ROAD
NAPERVILLE, IL 60563-9600
(630)-983-8676

ROCK RIVER WATER RECLAMATION DISTRICT
P.O. BOX 7480
3333 KISHWAUKEE
ROCKFORD, IL 61126-7480
(815)-387-8676

US SPRINT
5600 N. RIVER ROAD
ROSEMONT, IL 60018
(847)-318-3193

LEVEL 3 COMMUNICATIONS/
(GENUITY TELECOMMUNICATIONS)
149 WEST HWY 174
VILLAGE GREEN SQUARE
REPUBLIC, MO 65378

AT&T CABLE OF IOWA
3033 ASBURY ROAD
DUBUQUE, IA 52001-8459
(319)-556-6595

NORLIGHT TELECOMMUNICATIONS
13935 BISHOPS DRIVE
BROOKFIELD, WI 53005
(262)-792-7219

MEDIACOM
2506-1/2 BLOOMINGTON
STREATOR, IL 61364
(815)-672-5071

ROCHELLE CITY ENGINEER
P.O. BOX 456
3333 LINCOLN HIGHWAY
ROCHELLE, IL 61068
(815)-561-2059

UNDERGROUND TECHNOLOGIES INC.
3150 FOREST VIEW ROAD
ROCKFORD, IL 61109
(815)-394-8999

AT&T
866 ROCK CREEK ROAD
PLANO, IL 60545-9571
(708)-572-6898

WEST SHORE PIPELINE COMPANY
3400 S. BADGER ROAD
ARLINGTON, IL 60005
(847)-439-0270

AT&T
2404 EIGHTH AVE.
ROCKFORD, IL 61108
(815)-394-7276

INSIGHT COMMUNICATIONS OF ROCKFORD
4450 KISHWAUKEE STREET
ROCKFORD, IL 61109
(815)-395-8977

VILLAGE OF CHERRY VALLEY
806 E. STATE STREET
CHERRY VALLEY, IL 61016
(815)-332-3441

NATURAL GAS PIPE LINE
16648 IL HWY 82
GENESEO, IL 61254
(309)-944-4676

IDOT-DIST. 2
819 DEPOT AVE.
DIXON, IL 61021
(815)-284-5469

ALDRIDGE ELECTRIC
24151 SOUTH NORTHERN ILLINOIS DRIVE
CHANNAHON, IL 60410
(815)-467-0428

10. IDOT LOCATES SHALL BE REQUESTED BY CONTACTING KYLE LORENZ (815/284-5469) A REQUEST SHALL BE ACCOMPANIED BY A PLAN SHEET MARKED WITH THE AREA TO BE LOCATED, OR APPROPRIATE MEETING SHALL BE HELD.
11. TEMPORARY EROSION CONTROL SHALL COMPLY WITH ILLINOIS DEPARTMENT OF TRANSPORTATION'S STANDARD SPECIFICATIONS, SECTION 280 AND STANDARD DRAWING 2080001-03 FOR ALL INSTANCES IN WHICH THE CONSTRUCTION RELATED TO THE INSTALLATION OF FIBER OPTIC CABLE SYSTEM DISTURBS THE EXISTING GROUND CONDITION.
12. ANY DAMAGE TO EXISTING FENCE RESULTING FROM THE INSTALLATION AND CONSTRUCTION OF THE FIBER OPTIC SYSTEM SHALL BE REPAIRED BY THE CONTRACTOR IN ACCORDANCE WITH THE APPROPRIATE STANDARDS AT THE CONTRACTOR'S COST. THESE REPAIRS SHALL BE APPROVED BY THE ENGINEER.
13. TEMPORARY EROSION CONTROL SEEDING SHALL BE PLACED EVERY SEVEN DAYS WITHIN THOSE AREAS THAT HAVE BEEN DISTURBED BY THE INSTALLATION OF THE PROPOSED FIBER OPTIC SYSTEM IN ACCORDANCE WITH SECTION 280 OF THE STANDARD SPECIFICATIONS.
14. THE CONTRACTOR SHALL PERFORM ALL PROPOSED WORK IN A MANNER THAT DOES NOT REQUIRE ACCESS TO EXISTING RAILROAD PROPERTY AND IN A MANNER THAT IS SATISFACTORY TO THE RAILROAD ENGINEER. ARTICLE 107.12 OF THE STANDARD SPECIFICATIONS SHALL BE ADHERED TO DURING ALL PHASES OF CONSTRUCTION EXCEPT ACCESS TO RAILROAD RIGHT-OF-WAY WILL NOT BE ALLOWED. THE CONTRACTOR'S OPERATIONS MAY ENCROACH OVER THE RAILROAD'S RIGHT-OF-WAY; HOWEVER, SERVICES OF A RAILROAD FLAGGER WILL BE REQUIRED AS DETERMINED BY THE RAILROAD ENGINEER DURING CONSTRUCTION OF THE PROPOSED FIBER OPTIC SYSTEMS THAT WILL BE ATTACHED TO STRUCTURES THAT PASS OVER RAILROAD RIGHT-OF-WAY. THE COST OF ALL RAILROAD COORDINATION AND REQUIRED FLAGGERS SHALL BE INCLUDED IN THE COST OF THE FIBER OPTIC INSTALLATION.
15. WHEN WORK IS BEING DONE ON TOLLWAY R.O.W. OR WHEN A LOCATE IS REQUIRED FOR TOLLWAY FACILITIES, THE CONTRACTOR SHALL CONTACT THE ILLINOIS STATE TOLL HIGHWAY AUTHORITY AND REQUEST THAT BY A PERMIT OR WHAT EVER IS REQUIRED BY THE TOLLWAY.

JURISDICTIONAL WETLAND PROCEDURES

THE AREAS DESIGNATED AS JURISDICTIONAL WETLANDS ARE INDICATED ON THE DESIGN PLANS. THESE AREAS ARE PROTECTED UNDER STATE AND FEDERAL REGULATIONS. NO TRAFFIC IS ALLOWED IN THESE PROTECTED AREAS, EXCEPT PLOWING EQUIPMENT AND PEDESTRIAN TRAFFIC ARE ALLOWED PROVIDED THE TRAFFIC IS KEPT TO A MINIMUM AND THE SITES ARE RESTORED TO PRE- EXISTING CONDITIONS. CONSTRUCTION ACTIVITY THAT WILL RESULT IN ANY DISCHARGE OR DISTURBANCE OF THE SURFACE TOPOGRAPHY WILL NOT BE ALLOWED. ANY WORK IN WETLAND MUST COMPLY WITH THE REQUIREMENT OF THE NATION WIDE PERMIT #12 OF SECTION 404 OF THE CLEAN WATER ACT.

CONTACT: DR. CASSANDRA RODGERS (815/284-5455)

THREATENED AND ENDANGERED SPECIES (PLANT) PROTECTION PROCEDURES

THE LOCATION OF THREATENED & ENDANGERED SPECIES WILL BE IDENTIFIED IN THE FIELD BY A REPRESENTATIVE OF THE ILLINOIS DEPARTMENT OF TRANSPORTATION. THESE AREAS SHALL BE COMPLETELY ENCLOSED AND PROTECTED BY ORANGE PLASTIC SNOW FENCE BY THE CONTRACTOR. IT SHALL BE THE RESPONSIBILITY OF THE CONTRACTOR TO VERIFY THAT THESE AREAS HAVE BEEN IDENTIFIED PRIOR TO COMMENCING WORK. THREATENED & ENDANGERED SPECIES ARE PROTECTED UNDER STATE AND FEDERAL REGULATIONS. VEHICULAR TRAFFIC, PEDESTRIAN TRAFFIC AND CONSTRUCTION EQUIPMENT WILL NOT BE ALLOWED IN THESE PROTECTED AREAS. CONSTRUCTION ACTIVITY THAT WILL RESULT IN ANY DISCHARGE OR DISTURBANCE TO THE SURFACE TOPOGRAPHY INSIDE THE PROTECTED AREA WILL NOT BE ALLOWED.

CONTACT: DR. CASSANDRA RODGERS (815/284-5455)

LOCATION OF CROSSING UTILITIES FOR REFERENCE ONLY. PLEASE CALL ALL APPLICABLE UTILITY LOCATORS FOR EXACT LOCATION PRIOR TO DIGGING OR TRENCHING.

REVISIONS NAME	DATE

ILLINOIS DEPARTMENT OF TRANSPORTATION

SCALE: VERT. HORIZ.
DATE
DRAWN BY
CHECKED BY

PLOT DATE = Thu Dec 21 09:53:30 2006
FILE NAME = PkI-39 Fiber Optic\SHT005_Notes_01.dgn
PLOT SCALE = 0.5000 ' / IN.
USER NAME = condermance

TYPICAL SECTIONS

CONTRACT NO. 64C83

F.A.I. RTE.	SECTION	COUNTY	TOTAL SHEETS	SHEET NO.
39	141 / 201	*	46	6
STA.		TO STA.		
FED. ROAD DIST. NO.	ILLINOIS FED. AID PROJECT			
*OGLE / WINNEBAGO				

I-39

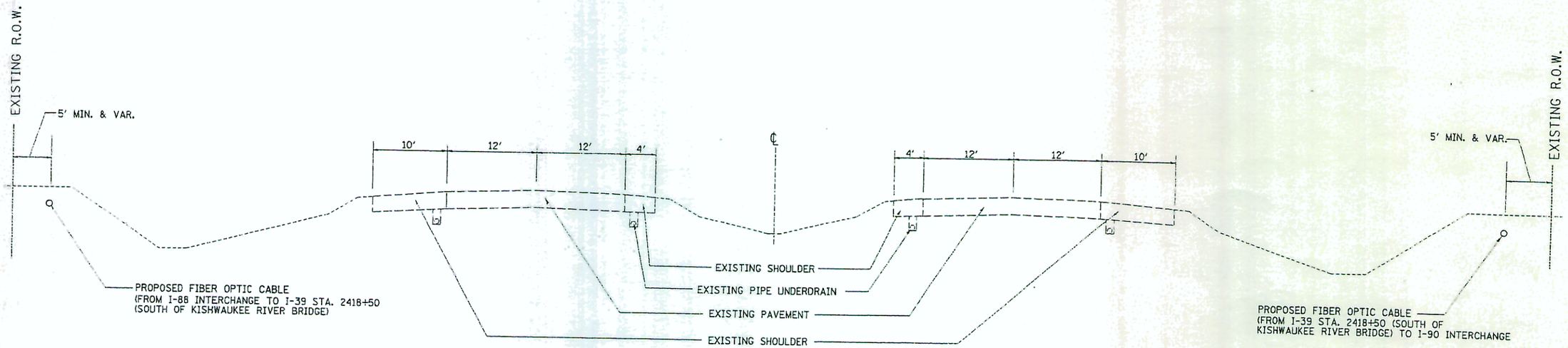

REVISIONS	
NAME	DATE

ILLINOIS DEPARTMENT OF TRANSPORTATION

TYPICAL SECTIONS

SCALE: VERT. N/A HORIZ. N/A

DATE DECEMBER 15, 2006

DRAWN BY CKL

CHECKED BY CAC

PLOT DATE = 12/14/2006
FILE NAME = G:\ENG\86-6798-13 IDOT\Civ\Sht\SHT006_I-39Typicals.dgn
PLOT SCALE = $SCALE$
USER NAME = $USER$

COILED END OF FIBER IN EXISTING H.H.
DID NOT TIE INTO EXISTING FIBER.

CONTRACT NO. 64C83

SHEET NO.	SECTION	COUNTY	TOTAL SHEETS	SHEET NO.
35	14[illegible] 201		46	7

STA. 4131+00 (I-88) TO STA. 13+00 (RAMP H)
FED. ROAD DIST. NO. ILLINOIS FED. AID PROJECT
DEKALB / WINNEBAGO

SEC. 29, T40N, R2E, 3rd. P.M.

Ramp "H" Sta 29+51.72
53' Lt. Sta 4135+91.29 Tollway

Limits of Borrow Area
Sta 4148+92 Exist. Tollway Skew 35°R.F.
Extend Exist. 36" RC P-52 L.F. Lt.
W/P Cut Type 1-R.C.I.P. @ 20°30'R.F.
To Proposed Ramp "H"
1-Headwall (Std 2051) D.S.FL 790.00
Conc. Collar Spcl. (2.40 Cu Yd.)

478.35' LT.
PL 4141+00

STONE RIPRAP SIZE # 2
Lt. Sta. 4148+92 (II) Tollway) 87 S.Y.

INLET TYPE A (STD 1683)
W/ SPECIAL FRAME & CLOSED LID
Rt. Sta. 4141+90 1 Each

1,400' DIRECT BURY

75' DIRECTIONAL BORING

Limits of Borrow Area
80' RT
23+04.809

96.99' RT
PL 24+36.44

90' RT
26+06

400' DIRECT BURY

EXISTING HH 474 (TOLLWAY)

PROJECT LIMIT

125' LT. 4134+50 EXIST. R.O.W.

4135+57.85 125' LT.

(Do Not Disturb) EXIST. M.H.

EXIST. P.O.W.

EXIST. 12" R.C.P.

125' LT. 4141+00 EXIST. R.O.W.

(Do Not Disturb) EXIST. M.H.

125' LT. 4145+00 EXIST. R.O.W.

4145+57.85 125' LT.

EXIST. M.H. (Remove)

EXIT. SIGN

EXIST. 66"x 43" R. ELLIPTICAL PIPE

EXIST. 15" PIPE (DO NOT DISTURB)

EXIST. R.O.W.

EXIST. M.H. (Do Not Disturb)

AC

EXIST. M.H. (Remove)

Extend Exist Tile

901'

4135+97.85 125' RT.

135' RT 4135+50

125' RT 4134+50 EXIST. R.O.W.

75' RT 7+60.08

HEADWALL REMOVAL
Rt. Sta. 4144+25 - 1 Each
Lt. Sta. 4148+31 - 1 Each
Lt. Sta. 4163+47 - 1 Each

STORM SEWER PIPE
Sta. 4141+90 Rt. 40 L.F. S.S. 2-8"

F.L. 793.8

EXIST. 36" R.C.P.

EXIST. 15" PIPE (DO NOT DISTURB)

EXIST. M.H. (Remove & Plug Drain Tile)

305'

75' RT 11+00

E.W.L.N.

MATCH LINE STA 23+04.08

E. Ramp "H"

N.W. Ramp

P.I. Ramp "H" Sta 13+00.446

MATCH LINE STA 13+00.00

STEEL PLATE BEAM GUARD RAIL TYPE A
Rt. Sta. 4155+55.5 To Rt. Sta. 4164+30.5 - 475 Lin. Ft.
Lt. Sta. 4162+50.0 To Lt. Sta. 4167+25 - 475 Lin. Ft.

CONCRETE GUTTER (SPECIAL)
Lt. Sta 4161+05-4162+15 115 Lin. Ft.
Rt. Sta 4161+79-4162+65 97 Lin. Ft.

F.L. 4160+59.02

4160+97.89 125 LT.

B.M. No. 423

39.27'

72°22'15"

4155+51.13 125 Ft.

4156.87.55 140 RT.

4160+97.89 140 RT. B.M. No. 8

EXIST. 15" CONC. PIPE (DO NOT DISTURB)

EXIST. R.O.W.

TO P.O.T. 1409+12.40

P.O.T. 1407+48.20

Ramp "H" Loop

Δ = 9° 46' 34"

4135 4140 4145 N 79°57'16" E 4150 4155 4160

C. ILL. TOLLWAY (I-88)

TO MP 13.0

EXIST. 15" PIPE (DO NOT DISTURB)

EXIST. 66"x 43" R. ELLIPTICAL PIPE

EXIST. 15" CONC. PIPE (DO NOT DISTURB)

EXIST. 36" R.C.P.

EXIST. 15" PIPE (DO NOT DISTURB)

EXIST. M.H. (Remove & Plug Drain Tile)

EXIST. R.O.W.

EXIST. M.H. (Do Not Disturb)

EXIST. M.H. (Remove)

Extend Exist Tile

AC

901'

305'

4135+97.85 125' RT.

4145+97.85 125' RT.

75' RT 7+60.08

75' RT 11+00

E.W.L.N.

HEADWALL REMOVAL
Rt. Sta. 4144+25 - 1 Each
Lt. Sta. 4148+31 - 1 Each
Lt. Sta. 4163+47 - 1 Each

STORM SEWER PIPE
Sta. 4141+90 Rt. 40 L.F. S.S. 2-8"

F.L. 793.8

N 79°57'16" E

P.I. Ramp "H" Sta 13+00.446

MATCH LINE STA 13+00.00

MATCH LINE STA 23+04.08

E. Ramp "H"

N.W. Ramp

STEEL PLATE BEAM GUARD RAIL TYPE A
Rt. Sta. 4155+55.5 To Rt. Sta. 4164+30.5 - 475 Lin. Ft.
Lt. Sta. 4162+50.0 To Lt. Sta. 4167+25 - 475 Lin. Ft.

CONCRETE GUTTER (SPECIAL)
Lt. Sta 4161+05-4162+15 115 Lin. Ft.
Rt. Sta 4161+79-4162+65 97 Lin. Ft.

F.L. 4160+59.02

4160+97.89 125 LT.

B.M. No. 423

39.27'

72°22'15"

4155+51.13 125 Ft.

4156.87.55 140 RT.

4160+97.89 140 RT. B.M. No. 8

EXIST. 15" CONC. PIPE (DO NOT DISTURB)

EXIST. R.O.W.

TO P.O.T. 1409+12.40

P.O.T. 1407+48.20

Ramp "H" Loop

Δ = 9° 46' 34"

4135 4140 4145 4150 4155 4160

C. ILL. TOLLWAY (I-88)

TO MP 13.0

EXIST. 15" PIPE (DO NOT DISTURB)

EXIST. 66"x 43" R. ELLIPTICAL PIPE

U.S.G.S. DATUM
5th G.A. (1929)

SEC 29, T40N, R2E, 3rd PM

CONTRACT NO. 64C83

FED. RTE.	SECTION	COUNTY	TOTAL SHEETS	SHEET NO.
39	141 / 201	*	46	8

STA. 13+00 (RAMP H) TO STA. 1480+00

FED. ROAD DIST. NO. ILLINOIS FED. AID PROJECT

*OGLE / WINNEBAGO

SCALE: 1" = 100'

Ramp "H" Sta. 0+00
69' Lt. Sta. 1432+80.65 ℄ F.A. 412

Sta. 6+61.73
End 10" C.R.P.C.C. Pavement
Begin 10" J.R.P.C.C. Pavement
2" Exp. Joint W/ Dowel Bars

P.I. 1427+95.57

235' DIRECT BURY

410' DIRECT BURY

250' DIRECTIONAL BORING

2,050' DIRECT BURY

40'-0"

5'-0"

B.M. No. 100

TREE

TREE LINE

MATCH LINE
STA 13+00.00

MATCH LINE
STA 1450+00

PROPOSED HH1
(STA. 10+15, 115'L)

PROPOSED HH2
(STA. 1450+00, 135'L)

NORTH

N 22°57'45" W

℄ F.A. 412
(I-39)

1420 1425 1435 1440 1445 1450

Sta. 38+15.07
End 10" C.R.P.C.C. Pavement
Begin 10" J.R.P.C.C. Pavement
2" Exp. Joint W/ Dowel Bars

℄ Ramp "B"
N.E. RAMP

P.I. 1427+95.57
Δ = 22°37'48"
D = 0°28'00"
R = 12,277.70'
T = 2,456.66'
L = 4,849.28'
E = 243.37'
Se = 0.023'/'
S.A. & Crown Reduced to Zero
Sta. 1401+78.91 to Sta. 1404+18.91
Sta. 1451+08.19 to Sta. 1453+48.15

EXISTING F.O.
EXISTING SEWER
EXISTING GAS 4" H.P.

Ramp "B" Sta. 47+67.236
69' Rt. Sta. 1439+91.387 ℄ F.A. 412

5th G.A. (1929)

SEC. 29, T40N, R2E, 3rd. P.M.

SEC. 30, T40N, R2E, 3rd. P.M.

MATCH LINE
STA 1450+00

MATCH LINE
STA 1480+00

F.O.S.J. 2,393.13' And P.I. Sta. 1427+95.57

P.I. 1451+88.19

180' DIRECTIONAL BORING

1,150' DIRECT BURY

70' DIRECTIONAL BORING

EXTENDED BORE 65' TO AVOID UTILITIES AND GUTTER OUTLET

1,610' DIRECT BURY

TREE LINE

B.M. No. 13

PROPOSED HH3
(STA. 1464+50, 95'L)

50' DIRECT BURY

44'R

NORTH

1450 1455 1460 1465 1470 1475 1480

℄ F.A. 412
(I-39)

POT 1453+48.02

POT 1464+44.75

POT 1464+18.08 F.A. 412
Sta. 20+00.00 Crestan Road (T.P. 371-A)

Sta. 1455+00 Const. Crossover

B.M. No. 12

B.M. No. 14

B.M. No. 15

CRESTON ROAD

2-Type A Inlet Box
220-L.F. P.D. CS, 12"
2-End Sections 12"
4-16 Ga. C.S. Diaphragm 12"
20 S.Y. P.C.C. Shoulders
2 CONC. THRUST BLOCKS

2-Type A Inlet Box
132 L.F. P.D. CS, 12"
2-End Sections 12"
4-16 Ga. C.S. Diaphragm 12"
20 S.Y. P.C.C. Shoulders
2 CONC. THRUST BLOCKS

Sta. 1474+50
2-Type A Inlet Box
20 S.Y. P.C.C. Shoulders

Lt. & Rt. Sta. 1474+25 To Lt. & Rt. Sta. 1474+50
48-L.F. P.D. CS 12"

P.I. 1427+95.57
Δ = 22°37'48"
D = 0°28'00"
R = 12,277.70'
T = 2,456.66'
L = 4,849.28'
E = 243.37'
Se = 0.023'/'
S.A. & Crown Reduced to Zero

BITUMINOUS CONCRETE CURB

Lt. Sta. 1474+31 - Lt. Sta. 1475+52 - 221 Lin. Ft.
Lt. Sta. 1476+61 - Lt. Sta. 1476+77 - 216 Lin. Ft.
Lt. Sta. 1478+86 - Lt. Sta. 1480+00 - 114 Lin. Ft.
Rt. Sta. 1474+31 - Rt. Sta. 1476+52 - 221 Lin. Ft.
Rt. Sta. 1476+61 - Rt. Sta. 1478+77 - 216 Lin. Ft.
Rt. Sta. 1478+86 - Rt. Sta. 1480+00 - 114 Lin. Ft.

STEEL PLATE BEAM GUARD RAIL TYPE A

Rt. Sta. 1474+26.33 to Rt. Sta. 1480+00 - 577.67 Lin. Ft.
Lt. Sta. 1474+29.45 to Lt. Sta. 1480+00 - 570.55 Lin. Ft.

TRAFFIC BARRIER TERMINAL TYPE 1

Rt. Sta. 1473+97.33 to Rt. Sta. 1474+26.33 - 1 Each

NOTES:

1. TEMPORARY EROSION CONTROL SEEDING SHALL BE PLACED EVERY SEVEN DAYS WITHIN THOSE AREAS THAT HAVE BEEN DISTURBED BY THE INSTALLATION OF THE PROPOSED FIBER OPTIC CABLES IN ACCORDANCE WITH SECTION 280 OF THE STANDARD SPECIFICATIONS.

PLOT DATE = 12/14/2005
FILE NAME = G:\ENGINEER\6798-13 IL001\Civil\SHEETS\06_FO_PI-1_82.dgn
PLOT SCALE = #SCALE#
USER NAME = #USER#

CONTRACT NO. 64083

F.A. RTE.	SECTION	COUNTY	TOTAL SHEETS	SHEET NO.
39	141 / 201	*	46	8
STA. 1480+00	TO STA. 1510+00			
FED. ROAD DIST. NO.	ILLINOIS FED. AID PROJECT			
*OGLE / WINNEBAGO				

HH#'S PLACED AT BOTTOM OF SLOPE. CONDUIT IN TRENCH UP TO BRIDGE.

U.S.G.S. DATUM 5th G.A. (1929)

Lt. Sta 1480+19.45 ℄ F.A. 412
End 10" C.R.P.C.C. Pavement
Begin Bridge Appr. Slab Pavement
2" Exp. Joint W/ Dowel Bars

Limits of Bridge Approach Slab Pavement (Std. 2353)

Lt. Sta 1484+50.21 ℄ F.A. 412
End Bridge Appr. Slab Pavement
Begin 10" C.R.P.C.C. Pavement
2" Exp. Joint W/ Dowel Bars

MATCH LINE STA. 1480+00

Limits of Bridge Appr. Slab Pavement (Std. 2353)

PROPOSED HH 4 (STA. 1480+20, 90'L)

POT 1482+37.44

POT 1483+11.63

430' BRIDGE ATTACHMENT (SEE DETAIL)

PROPOSED HH 5 (STA. 1484+50, 90'L)

POT 1490+58.95

Sta. 1487+75
2-Type F, Inlet Box
118-L.F. R.D. CS 12"
2-End Sections
4-16 Ga. C.S. Diaphragms-12"
20 S.Y. P.C.C. Shoulders
2 CONC. THRUST BLOCKS

Sta. 1489+55
2-Type F, Inlet Box
20 S.Y. P.C.C. Shoulders

Lt. & Rt. Sta. 1489+55 To Lt. & Rt. Sta. 1489+80
48-L.F. R.D. CS 12"

Sta. 1489+80
2-Type F, Inlet Box
174-L.F. R.D. CS 12"
2 End Sections
4-16 Ga. C.S. Diaphragms-12"
20 S.Y. P.C.C. Shoulders
2 CONC. THRUST BLOCKS

SEC 20 T40N, R2E, 3rd P.M.

Sta 14+60.72 ℄ Ramp "D"
End 10" J.R.P.C.C. Pavement
Begin 10" C.R.P.C.C.

PROPOSED HH 6 (STA. 1509+00, 205'L)

SCALE: 1" = 100'

TREE LINE

P.O.T. Sta 14+80.72 ℄ Ramp "D" = Sta 1504+67.01 ℄ F.A. 412, 86.00' Lt.

AC

2,480' DIRECT BURY

18" CHANNEL

Sta 24+10.58 ℄ Ramp "D" = Sta 1495+17.24 ℄ F.A. 412, 69.00' Lt.

B.M. No. 18

S 1°08'45" E

84'-0"

RAMP "D"

P.I. Sta 15+67.01 ℄ Ramp "D"

P.I. Sta 13+60.72

120° DIRECTIONAL BORING

MATCH LINE STA. 1510+00

1480 1485 1490 1495 ℄ F.A. 412 (I-39) 1500 1505 1510

NORTH

20' DIRECT BURY

63°27'49"

50' DIRECT BURY

P.I. Sta 10+77.69 Ramp "A"

Sta 0+00.00 ℄ Ramp "A" = Sta 1496+55.02 ℄ F.A. 412, 69.00' Rt

N 3°02'15" E

PROPOSED HH 7 (STA. 1509+50, 105'L)

B.M. No. 17

CHICAGO & NORTHWESTERN RY.

Rt. Sta 1480+32.29 ℄ F.A. 412
End 10" C.R.P.C.C. Pavement
Begin Bridge Approach Slab Pavement
2" Exp. Joint W/ Dowel Bars

Limits of Bridge Appr. Slab Pavement (Std. 2353)

P.O.T. 1481+60.08

Rt. Sta 1484+63.04 ℄ F.A. 412
End Bridge Approach Slab Pavement
Begin 10" C.R.P.C.C. Pavement
2" Exp. Joint W/ Dowel Bars

Limits of Bridge Appr. Slab Pavement (Std. 2353)

10 ℄ RAMP "A"

S.E. RAMP

Sta 6+20.08 ℄ Ramp "A" = End 10" C.R.P.C.C. Pavement ℄ Begin 10" J.R.P.C.C. Pavement ℄ 2" Exp. Joint W/ Dowel Bars

Sta 7+60.08 ℄ Ramp "A" = Sta 1504+14.03 ℄ F.A. 412, 109.28' Rt

TRAFFIC BARRIER TERMINAL, TYPE 2
Rt. Sta. 1489+76.08 to Rt. Sta. 1489+90.58 — 1 Each

B.M. No. 19

WIDE FLANGE BEAM TERMINAL JOINT COMPLETE 24"

Rt. Sta. 1480+01.79	to Rt. Sta. 1480+32.29	1 Each
Rt. Sta. 1454+63.04	to Rt. Sta. 1484+93.54	1 Each
Lt. Sta. 1479+88.96	to Lt. Sta. 1480+15.46	1 Each
Lt. Sta. 1484+50.21	to Lt. Sta. 1484+80.71	1 Each

TRAFFIC BARRIER TERMINAL TYPE 5

STEEL PLATE BEAM GUARD RAIL TYPE A

Rt. Sta. 1480+00 to Rt. Sta. 1480+97.33 - 97.33 Lin. Ft.
Rt. Sta. 1483+90.55 to Rt. Sta. 1489+78.08 - 587.5 Lin. Ft.

Lt. Sta. 1480+00 to Lt. Sta. 1480+91.95 — 91.95 Lin. Ft.
Lt. Sta. 1483+85.20 to Lt. Sta. 1489+85.20 - 600 Lin. Ft.

Rt. Sta. 1479+58.35 to Lt. Sta. 1480+92.75 (Median) - 137.5 Lin. Ft.
Lt. Sta. 1483+89.78 to Lt. Sta. 1485+27.28 (Median) - 137.5 Lin. Ft.

TRAFFIC BARRIER TERMINAL TYPE 4

Rt. Sta. 1479+33.35 to Rt. Sta. 1479+58.35 (Median) - 1 Each
Lt. Sta. 1485+24.18 to Lt. Sta. 1485+49.18 (Median - 1 Each

TRAFFIC BARRIER TERMINAL TYPE 1

Lt. Sta. 1489+85.20 - Lt. Sta. 1490+10.20 - 1 Each

TYPE C INLET BOX STD. 2324

Lt. Sta. 1481+06.03	- 1 Each
Rt. Sta. 1481+14.74	- 1 Each
Lt. Sta. 1483+67.76	- 1 Each
Rt. Sta. 1483+76.47	- 1 Each

TYPE D INLET BOX STD. 2324

Lt. Sta. 1481+01.45	- 1 Each
Rt. Sta. 1481+19.33	- 1 Each
Lt. Sta. 1483+63.17	- 1 Each
Rt. Sta. 1483+81.05	- 1 Each

TRAFFIC BARRIER TERMINAL TYPE 6

Rt. Sta. 1490+97.33 to Rt. Sta. 1481+22.33 — 1 Each
Rt. Sta. 1480+92.75 to Rt. Sta. 1481+17.75 (Median) — 1 Each

NOTES:

1. TEMPORARY EROSION CONTROL SEEDING SHALL BE PLACED EVERY SEVEN DAYS WITHIN THOSE AREAS THAT HAVE BEEN DISTURBED BY THE INSTALLATION OF THEPROPOSED FIBER OPTIC CABLES IN ACCORDANCE WITH SECTION 280 OF THE STANDARD SPECIFICATIONS.

PLOT DATE = 12/14/2006
FILE NAME = D:\ENGINE~1\6708-13 1001\Cad\Sht\SHT089_FO_Pln_03.dgn
PLOT SCALE = 1 ' SCALE
USER NAME = system

CONTRACT NO. 64C83

F.A.I. RTE.	SECTION	COUNTY	TOTAL SHEETS	SHEET NO.
39	14I / 20	*	46	10
STA. 1510+00	TO STA. 1523+00			
FED. ROAD DIST. NO.	ILLINOIS	FED. AID PROJECT		

*OGLE / WINNEBAGO

CURVE DATA
℄ RAMP "D"
P.I.10+67.01
Δ=46°51'16" RT.
D=7°30'00"
T=331.02'
R=763.94'
L=624.73'
E=66.63'
S.E.0.08%
S.E. TRANS
STA.6+07.99 - STA.7+99.99

CURVE DATA
℄ RAMP "D"
P.I. STA.3+64.40
Δ=32°28'49" LT.
D=12°00'00"
T=139.08'
R=477.46'
L=270.67'
E=19.64'
S.E.=0.08%
SE. TRANS
STA. 1+13.32 - STA. 2+81.32
STA.4+39.98 - STA.6+07.98

CURVE DATA
℄ RAMP "C"
P.I. STA.17+16.31
Δ=32°00'18" LT.
D=12°00'00"
T=136.93'
R=477.46'
L=266.72'
E=19.25'
S.E. 0.08%
S.E. TRANS.
STA. 14+67.38 - STA. 16+35.38
STA. 17+60.09 - STA. 19+58.08

CURVE DATA
℄ RAMP "C"
P.I.STA.10+64.46
Δ=43°26'51" RT.
D=7°30'00"
T=304.38'
R=763.94'
L=579.30'
E=58.40'
S.E.0.08%
S.E. TRANS
STA. 12+75.36 - STA. 14+67.36

Note:
For Superelevation Transition on Terminal Sections See Detail Sheets

Sta.261+45.75℄ Ill. Rte 38=
Sta.0+00.00 ℄ Ramp "D"

Sta.261+45.54℄ Ill. Rte 38=
Sta.21+05.36 ℄ Ramp"C"

150'-50'-150'
6.0' Offset

PROPOSED HH 9
(STA. 1516+55, 675'L)

TREE LINE

R=145'

Sta. 19+58.08
End 10" J.R.P.C.C. Pavement
2" Exp. Joint

S14°28'48"W

75'R

75°00'

S46°29'06"W

P.T.39+46.09

P.C.15+29.38

P.T.13+59.36

R.W. RAMP
℄ RAMP "C"

S.3°02'15"W

Sta. 6+60.08
End 10" C.R.P.C.C. Pavement
Begin 10" J.R.P.C.C. Pavement
2" Exp. Joint w/ Dowel Bars

P.C. Sta.7+60.08 ℄ Ramp"C"=
Sta.1533+81.12 ℄ F.A. 412,109.28' Lt.

S1°06'45"E

Sta. 14+60.72 ℄ Ramp "D"=
Sta.1504+67.01 ℄ F.A. 412, 68.00' Lt.

P.T. Sta.14+60.72 ℄ Ramp "D"=
Sta.1504+67.01 ℄ F.A. 412, 108.28' Rt.

P.I. 13+60.72

Sta. 14+60.72
End 10" J.R.P.C.C. Pavement
Begin 10" C.R.P.C.C. Pavement
2" Exp. Joint w/ Dowel Bars

SW RAMP
℄ RAMP "D"

P.C. 7+39.99

S45°00'01"E

P.T. 13+92.09

260' DIRECTIONAL BORING
Sta 1+13.32
Begin 10" J.R.P.C.C. Pavement
2" Exp. Joint

465' DIRECT BURY

PROPOSED HH 8
(STA. 1515+90, 125'L)
SPLICE

245' DIRECTIONAL BORING

MATCH LINE
STA. 1523+00

Pi Sta 10+67.01 ℄ Ramp "D"=
Sta.1508+97.54 ℄ F.A.412, 98.02' Lt.

450' DIRECT BURY

Pi Sta.10+64.46 ℄ Ramp"C"
Sta.1525+77.17 ℄ F.A.412,125.41' Lt.

2' STUB

8' STUB (Nose Control Point)

590' DIRECT BURY

MATCH LINE
STA. 1510+00

1505 1510 1515 1520 NORTH 1525 1530

℄ F.A.412 (I-39)

MATCH

Nose Control Point

Pi Sta.10+77.69 ℄ Ramp "A"
Sta.1507+31.19 ℄ F.A.412, 125.11' Rt.

250' DIRECTIONAL BORING

Sta.1517+30.75 Mainline=
Sta 254+26.90 Rte.38

Pi Sta.12+31.54 ℄ Ramp "B"=
Sta.1527+22.99 ℄ F.A.412, 56.76' Rt.

8' STUB (Nose Control Point)

N1°06'45"W

PT 15+30.06

P.O.T. Sta.16+30.06 ℄ Ramp"B"=
Sta.1531+61.01 ℄ F.A.412, 88.00' Rt.

Sta. 6+50.06
End 10" C.R.P.C.C. Pavement
Begin 10" J.R.P.C.C. Pavement
2" Exp. Joint w/ Dowel Bars

N3°02'15"E

CURVE DATA
℄ RAMP "A"
P.I.STA.10+77.69
Δ=45°09'02" RT.
D=7°30'00"
T=317.61'
R=763.94'
L=602.01'
E=63.39'
S.E.0.08%
SE. TRANS.
STA. 12+98.09 - STA. 14+90.09

SE RAMP
℄ RAMP "A"

N49°11'17"E

P.C. Sta.7+60.08 ℄ Ramp"A"=
Sta.1504+42.12 ℄ F.A. 412, 108.28' Rt.

P.C. 16+02.09

P.T. 18+92.09

Sta. 21+20.15
End 10" J.R.P.C.C. Pavement
2" Exp. Joint

P.T. 20+08.15

Sta.24+10.68 ℄ Ramp"C"=
Sta.1495+17.24 ℄ F.A. 412, 69.00' Lt.

N0°32'22"W

1' STUB

1495 NORTH 1500

Sta 0+00.00 ℄ Ramp"A"=
Sta.1495+55.02 ℄ F.A.412, 69.00' Rt.

CURVE DATA
℄ RAMP "A"
P.I.STA.18+16.31
Δ=48°43'38" LT.
D=12°00'00"
T=216.22'
R=477.46'
L=406.06'
E=46.65'
S.E.0.08%
SE. TRANS.
STA. 14+90.09 - STA. 16+58.09
STA. 19+52.15 - STA. 21+20.15

Sta 247+28.61℄ Ill. Rte 38=
Sta. 22+82.05℄ Ramp"A"

210'-80'-210'
6.44' Offset

120' DIRECTIONAL BORING

PROPOSED HH 10
(STA. 1516+55, 700'R)

445' DIRECT BURY

179° 59' 50.5"

P.I. 250+03.07

Sta. 1+38.46
Begin 10" J.R.P.C.C. Pavement
2" Exp. Joint

P.C. 2+50.46

P.T. 6+53.42

N.E. RAMP
℄ RAMP "B"

N46°53'36"W

P.C. 8+92.42

90°00

N0°32'22"W

Sta 247+28.61℄ Ill. Rte 38=
Sta. 0+00.00 ℄ Ramp"B"

180'-60'-180'
6.0' Offset

CURVE DATA
℄ RAMP "B"
P.I. STA.4+64.82
Δ=48°21'17" LT.
D=12°00'00"
T=214.36'
R=477.46'
L=402.98'
E=45.91'
S.E.=0.08%
S.E. TRANS.:
STA.1+38.46 - STA.3+00.48
STA.5+97.42 - STA.7+85.42

CURVE DATA
℄ RAMP "B"
P.I. STA.12+31.54
Δ=47°44'54" RT.
D=7°30'00"
T=336.12'
R=763.94'
L=636.54'
E=71.48'
S.E. 0.08%
S.E. TRANS.
STA. 7+85.42 - 9+57.42

Sta. 16+30.06
End 10" J.R.P.C.C. Pavement
Begin 10" C.R.P.C.C. Pavement
2" Exp. Joint w/Dowel Bars

Sta. 0+00.00 ℄ Ramp"C"=
Sta.1536+40.13℄ F.A.412, 69.00' Lt.

1' STUB

1535 NORTH 1540

2' STUB

NOTES:

1. TEMPORARY EROSION CONTROL SEEDING SHALL BE PLACED EVERY SEVEN DAYS WITHIN THOSE AREAS THAT HAVE BEEN DISTURBED BY THE INSTALLATION OF THEPROPOSED FIBER OPTIC CABLES IN ACCORDANCE WITH SECTION 280 OF THE STANDARD SPECIFICATIONS.

PLOT DATE = 12/14/2006
FILE NAME = c:\DGN\DR-6798-13 IDOT\Cs+Sts\SHTS\R16 FO Pln_04.dgn
PLOT SCALE = 1.0000 '/ IN.
PLOT STYLE = BUSER5
USER NAME = BUSER5

CONTRACT NO. 64C83

SHEET	SECTION	COUNTY	TOTAL SHEETS	SHEET NO.
39	141 / 201	•	42	1

STA. 1523+00 TO STA. 1575+00

FED. ROAD DIST. NO. ILLINOIS FED. AID PROJECT

•OGLE / WINNEBAGO

SCALE 1"=100'

BORE TO HANDHOLE TO CLEAR DITCH.

U.S.G.S. DATUM
5th G.A. (1929)

SEC 20, T40N, R2E, 3rd P.M.

SEC 17 T40N, R2E, 3rd P.M.

P.C. Sta 7+35.99

S.W. RAMP @ RAMP "C"

Sta. 1517+30.75 FA 412 = Sta 254+26.90 RTE. 38

℄ ILL RTE. 38

P.O.T. 1516+48.24

P.O.T. 1517+66.17

B.M. No. 20

P.I. Sta 2+50.03

S.E. RAMP @ RAMP "C"

N 66° 11' 17" E

6+02.05

MATCH LINE STA. 1523+00

P.I. Sta 10+64.46 ℄ Ramp "C"

Sta 8+80.08 ℄ Ramp "C" End 10" J.R.P.C.C. Pavement Begin 10" J.R.P.C.C. Pavement 2" Exp. Joint W/ Dowel Bars

P.C. Sta 7+60.38 ℄ Ramp "C" = Sta 1525+81.12 ℄ F.A. 412, 109.23' Lt.

150' DIRECTIONAL BORING

PROPOSED HH 11 (STA. 1529+00, 200' Lt.)

1,100' DIRECT BURY

Sta 0+00.00 ℄ Ramp "C" = Sta 1536+41.13 ℄ F.A. 412, 89.00' Lt.

MATCH LINE STA. 1540+00

B.M. No. 26

S 3°02'15" W

℄ F.A. 412 (I-39)

NORTH

200' DIRECT BURY

260' DIRECT BURY

P.I. Sta 12+31.54 ℄ Ramp "B"

N 1°08'45" W

N.W. RAMP "B" RAMP "B" 38° W

P.C. 8+93.93

Sta 15+30.06 ℄ Ramp "B" End 10" J.R.P.C.C. Pavement Begin 10" C.R.P.C.C. Pavement 2" Exp. Joint W/ Dowel Bars

P.I. 15+30.06

P.C.T. Sta 16+30.06 ℄ Ramp "B" = Sta. 1531+51.01 ℄ F.A. 412, 86.00' Rt.

19'-0"

AC

FO

E

MATCH LINE STA. 1540+00

365' DIRECT BURY

PROPOSED HH 12 (STA. 1543+65, 151' Lt.)

P.O.T. 1542+51.47

1,635' DIRECT BURY

P.O.T. 1556+21.74

100' DIRECTIONAL BORING

Sta. 1569+95.83 F.A. 412 = Sta. 83+07.00 Twombly Rd.

SCALE: 1" = 100'

700' PLACEMENT IN ROCK

CONDUIT EXTENDED 200' TO HANDHOLE

200' DIRECT BURY

B.M. No. 29

SUMMIT PIPE UNDERDRAIN

SUMMIT PIPE UNDERDRAIN

NORTH

℄ F.A. 412 (I-39)

44°R

44°R

PROPOSED HH 13 (STA. 1569+00, 150' Lt.)

90°34'43"

P.O.T. 1569+61.89

MATCH LINE STA. 1570+00

P.O.T. 1564+91.75

Sta. 25+80.01 ℄ Ramp "E" = Sta 1541+10.76 ℄ F.A. 412, 69.00' Rt.

ROAD

Sta 1559+00 Construct Crossover

Underdrain Omitted Sta. 1530+00 - Sta. 1570+00 Not Required Because of Undercut Backfill & Rock Cut

NOTES:

1. TEMPORARY EROSION CONTROL SEEDING SHALL BE PLACED EVERY SEVEN DAYS WITHIN THOSE AREAS THAT HAVE BEEN DISTURBED BY THE INSTALLATION OF THEPROPOSED FIBER OPTIC CABLES IN ACCORDANCE WITH SECTION 280 OF THE STANDARD SPECIFICATIONS.

PLOT DATE = 12/14/2006
FILE NAME = c:\engcom\6c7983\illinois\sht\ill_fo_pln_85.dgn
FILE SCALE = 1"=100'
PLOT SCALE = 1.0000
USER NAME = susan

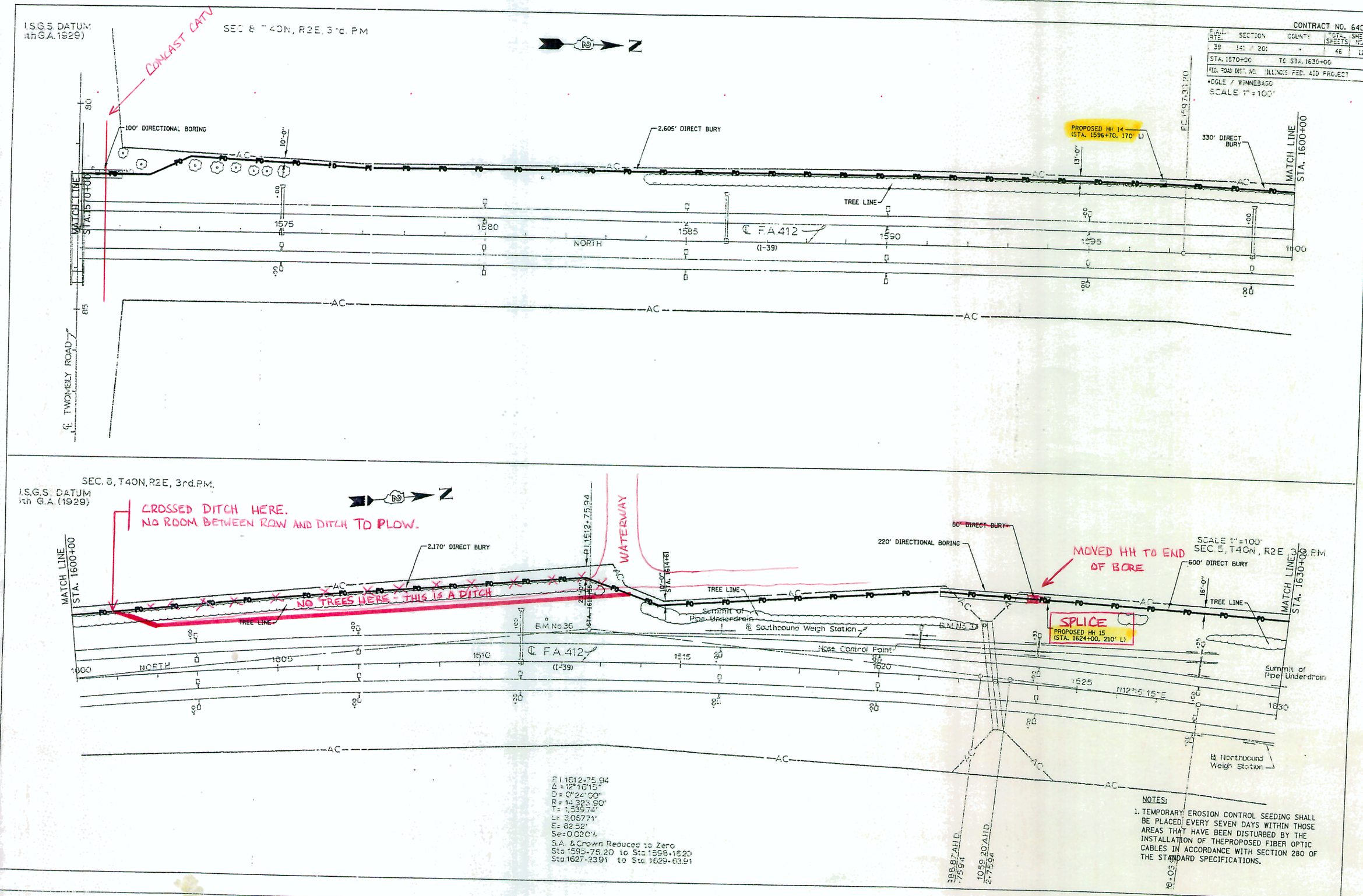

NOTES:

1. TEMPORARY EROSION CONTROL SEEDING SHALL BE PLACED EVERY SEVEN DAYS WITHIN THOSE AREAS THAT HAVE BEEN DISTURBED BY THE INSTALLATION OF THEPROPOSED FIBER OPTIC CABLES IN ACCORDANCE WITH SECTION 280 OF THE STANDARD SPECIFICATIONS.

U.S.G.S. DATUM
5th G.A. (1929)

CONTRACT NO. 64C83

F.A.I. RTE.	SECTION	COUNTY	TOTAL SHEETS	SHEET NO.
39	141 & 201	*	46	13
STA. 1630+00	TO STA. 1680+00			
FED. ROAD DIST. NO.	ILLINOIS	FED. AID PROJECT		

*OGLE & WINNEBAGO

SCALE: 1" = 100'

Δ = 12°07'03"
D = 0°24'00"
R = 14,323.90'
T = 1520.36'
L = 3029.38'
E = 80.46'
Se = 0.020'/'
S.A. & Crown Reduced to Zero
Sta 1646+81.02 to Sta 1649+01.02
Sta 1677+70.40 to Sta 1680+10.40

MATCH LINE STA. 1630+00

1,880' DIRECT BURY

ENVIRONMENTALLY SENSITIVE PLANTING

SOUTHBOUND WEIGH STATION
(See Plan & Profile Sheets)

PROPOSED HH 16
(STA. 1648+00, 250' LT)

P.C. 1640.21

210' DIRECTIONAL BORING

DRAINAGE DITCH LINE

B.M. No. 38

B.M. No. 39

540' DIRECT BURY

100' DIRECTIONAL BORING

345' DIRECT BURY

MATCH LINE STA. 1660+00

Summit of Pipe Underdrain

℄ Southbound Weigh Station

Nose Control Point

℄ F.A. 412 (I-39)

Summit of Pipe Underdrain

Nose Control Point

℄ Northbound Weigh Station

Summit of Pipe Underdrain

SUMMIT PIPE UNDERDRAIN

NORTHBOUND WEIGH STATION
(See Plan & Profile Sheets)

AC

U.S.G.S. DATUM
5th G.A. (1929)

P.I. 1663+41.38
Δ = 12° 07' 03"
D = 0° 24' 00"
R = 14 323.90
T = 1520.36'
L = 3029.38'
E = 80.46'
Se = 0.020'/'
S.A. & Crown Reduced to Zero
Sta 1646+81.02 to Sta 1649+01.02
Sta 1677+70.40 to Sta 1680+10.40

SEC. 5 T40N, R2E, 3rd. P.M.

SEC. 32, 141N, R2E, 3rd. P.M.

SCALE: 1" = 1

LIND RD

N 89° 26' 59" E 2,619.68'

B.M. No. 40

PROPOSED HH 17
(STA. 1663+10, 130' LT)

300' DIRECT BURY

1,700' DIRECT BURY

P.T. 1678+50.40

N 0° 09' 12" E

MATCH LINE STA. 1660+00

MATCH LINE STA. 1680+00

℄ F.A. 412 (I-39)

℄ Northbound Weigh Station

Nose Control Point

IND RD

END PROJECT EBF-412-5(16)
STA. 1680+00.78

EQUATION:
Sta. 1680+00.78 Bk =
Sta. 1680+00.00 Ahd
END CONSTRUCTION
SECTION 141-1

NOTES:

1. TEMPORARY EROSION CONTROL SEEDING SHALL BE PLACED EVERY SEVEN DAYS WITHIN THOSE AREAS THAT HAVE BEEN DISTURBED BY THE INSTALLATION OF THEPROPOSED FIBER OPTIC CABLES IN ACCORDANCE WITH SECTION 280 OF THE STANDARD SPECIFICATIONS.

PLOT DATE = 12/14/2005
FILE NAME = G:\ENG\06-16798-13 (001)\Civ\Sht\SH1813_F0_Pln_P7.dgn
PLOT SCALE = 1'SCALE=
USER NAME = mbeltra

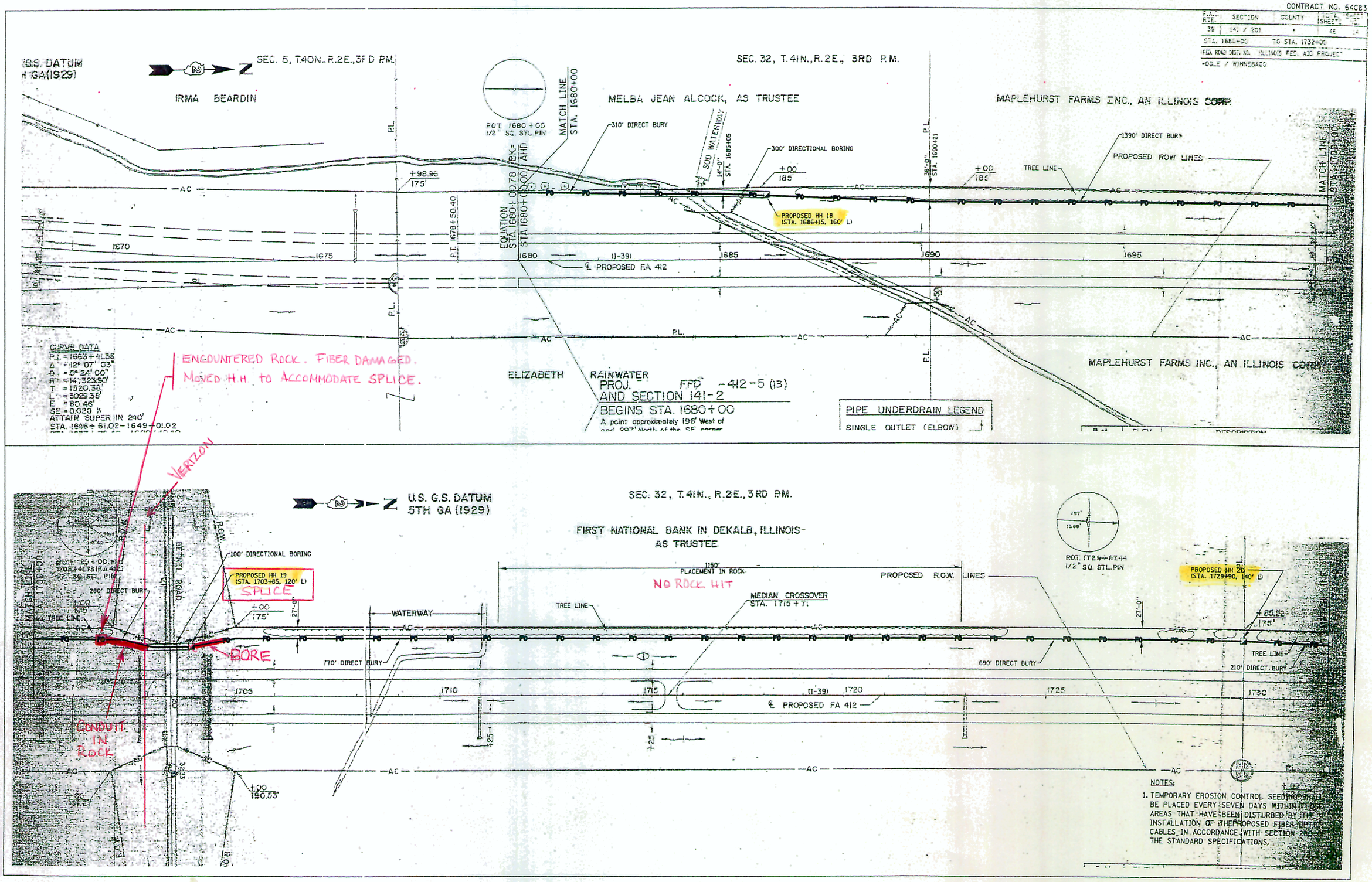
CONTRACT NO. 64C83
SECTION
COUNTY
STA. 1680+00 TO STA. 1732+00
FED. ROAD DIST. NO. ILLINOIS FED. AID PROJECT
WOOLE / WINNEBAGO
U.S. G.S. DATUM
5TH GA (1929)
SEC. 5, T.40N., R.2E., 3RD P.M.
SEC. 32, T.41N., R.2E., 3RD P.M.
IRMA BEARDIN
MELBA JEAN ALCOCK, AS TRUSTEE
MAPLEHURST FARMS INC., AN ILLINOIS CORP.
POT 1680+00 1/2" SQ. STL. PIN
MATCH LINE STA. 1680+00
310' DIRECT BURY
300' DIRECTIONAL BORING
1390' DIRECT BURY
PROPOSED ROW LINES
TREE LINE
PROPOSED HH 18 (STA. 1686+15, 160' L)
EQUATION STA. 1680+00.78 BK = STA. 1680+00.00 AHD
P.T. 1678+50.40
℄ PROPOSED F.A. 412
CURVE DATA
P.I. = 1663+41.35
Δ = 12° 07' 03"
D = 0° 24' 00"
R = 14,323.90'
T = 1520.36'
L = 3029.58'
E = 80.46'
SE = 0.020 ½
ATTAIN SUPER IN 240'
STA. 1646+61.02 - 1649+01.02
ENCOUNTERED ROCK. FIBER DAMAGED.
MOVED H.H. TO ACCOMMODATE SPLICE.
ELIZABETH RAINWATER
PROJ. FFD -412-5 (13)
AND SECTION 141-2
BEGINS STA. 1680+00
A point approximately 196' West of
PIPE UNDERDRAIN LEGEND
SINGLE OUTLET (ELBOW)
VERIZON
U.S. G.S. DATUM
5TH GA (1929)
SEC. 32, T.41N., R.2E., 3RD P.M.
FIRST NATIONAL BANK IN DEKALB, ILLINOIS
AS TRUSTEE
POT 1729+87.44 1/2" SQ. STL. PIN
100' DIRECTIONAL BORING
PROPOSED HH 19 (STA. 1703+85, 120' L)
SPLICE
280' DIRECT BURY
BETHEL ROAD
WATERWAY
1150' PLACEMENT IN ROCK
NO ROCK HIT
MEDIAN CROSSOVER STA. 1715+71
PROPOSED R.O.W. LINES
PROPOSED HH 20 (STA. 1729+90, 140' L)
BORE
770' DIRECT BURY
690' DIRECT BURY
210' DIRECT BURY
℄ PROPOSED FA 412
CONDUIT IN ROCK
NOTES:
1. TEMPORARY EROSION CONTROL SEEDING SHALL BE PLACED EVERY SEVEN DAYS WITHIN THOSE AREAS THAT HAVE BEEN DISTURBED BY THE INSTALLATION OF THE PROPOSED FIBER OPTIC CABLES IN ACCORDANCE WITH SECTION 280 OF THE STANDARD SPECIFICATIONS.

CONTRACT NO. 64083

F.A.I. RTE.	SECTION	COUNTY	TOTAL SHEETS	SHEET NO.
39	141 / 201	*	48	15
STA. 1732+00		TO STA. 1775+00		
FED. ROAD DIST. NO.	ILLINOIS FED. AID PROJECT			
*OGLE / WINNEBAGO				

U.S. G.S. DATUM
5TH GA (1929)

SEC. 29, T.41N., R.2E., 3RD P.M.

HAROLD E. & VERA M. LAZIER

PROPOSED R.O.W. LINES

+32.92
320.90'

TEMPORARY EASEMENT

+72.26
245.94'

+50
183.04'

+00
165.71'

P.O.T. 1748+62.63
1/2" SQ. STL. PIN

LANE

PROPOSED HH 21
(STA. 1756+35, 155' LT)

P.O.T. 1756+30.65
1/2" SQ. STL. PIN

125' DIRECTIONAL BORING

GEORGE HARRY ROSS

TEMPORARY EASEMENT

+00
275'

610' DIRECT BURY

+00
200'

+00
175'

+00
200'

2435' DIRECT BURY

STA 1755+36.15 (F.A. 412)
= STA 26+88.57 (SW RAMP)

STA 1765+01.44 (F.A. 412)
= STA. 0+00 (SE RAMP)

1735 1740 (I-39) 1745 1750 1755 1760

℄ PROPOSED FA 412

WATERWAY

SOD

SEC. LINE

P.L.

+00
205'

+01.94

+33.41
173.84

BELTER FARMS, INC.

PROPERTY STATE OF ILLINOIS

B.M.	ELEV.	DESCRIPTION
141-2-6	777.99	CHISELED SQUARE ON EAST WALL OF [illegible] IN SOD DRAINAGE DITCH 210' [illegible]

PROPOSED HH 22
(STA. 1773+35, 330' LT)

U.S. G.S. DATUM
5TH GA (1929)

SEC. 29, T.41N., R.2E., 3RD P.M.

SEC. 20, T.41N., R.2E., 3RD P.M.

P.O.T. 1770+07.25
1/2" SQ. STL. PIN

930' DIRECT BURY

150' DIRECTIONAL BORING

P.O.T. 1779+82.94
1/2" SQ. STL. PIN

P.O.T. 1782+41.45
1/2" SQ. STL. PIN

P.O.T. 1782+61.70
= 28+00.00 (ILL. RTE 64)
RR ⌀ WASHER

PROPOSED R.O.W. LINES

TREE LINE

75' DIRECTIONAL BORING

+00
200'

GEORGE HARRY ROSS

BELLE C. & JOHN G. BOYLE, JR.

SOD WATERWAY

PROPOSED R.O.W. LINE

+00
95'

+00
270'

PROPOSED HH 23
(STA. 1774+30, 205' LT)

SW RAMP

IRRIGATION POND

70' DIRECT BURY

MATCH LINE STA. 1775+00

1765 1770 1775 (I-39) 1780 1785 1790 1795

℄ PROPOSED FA 412

89° 28' 16"

SE RAMP

NW RAMP

NE RAMP

+00
170.70'

+00
205'

+00
70'

KISHWAUKEE CREEK

P.L.

TEMPORARY EASEMENT

+50
79.77'

+50
125'

+60
50.44'

+60
125'

F+22

F+02

ILL. RTE. 64

SEC. LINE

NOTES:

1. TEMPORARY EROSION CONTROL SEEDING SHALL BE PLACED EVERY SEVEN DAYS WITHIN THOSE AREAS THAT HAVE BEEN DISTURBED BY THE INSTALLATION OF THE PROPOSED FIBER OPTIC CABLES IN ACCORDANCE WITH SECTION 250 OF THE STANDARD SPECIFICATIONS.

B.M.	ELEV.	DESCRIPTION
141-2-7	783.62	CHISELED SQUARE ON TOP OF CONCRETE POST, 180' [illegible] OF STA. 1765+00
141-2-8	789.09	CHISELED SQUARE ON TOP OF CONCRETE POST, 3.5' [illegible] OF STA. 1774+46.6

PLOT DATE = 12/14/2006
FILE NAME = c:\projects\678113 100\tv\dgn\sht015 FO Plan_01.dgn
PLOT SCALE = 1.0000
USER NAME = jusera

CONTRACT NO. 64081

F.A. RTE.	SECTION	COUNTY	SHEET NO.	SHEETS
39	141 / 201	•	46	78
STA. 1775+00		TO STA. 1796+00		
FED. ROAD DIST. NO.	ILLINOIS	FED. AID PROJECT		
• OGLE / WINNEBAGO				

U.S. G.S. DATUM

SEC. 29, T. 41N., R. 2E., 3RD P.M.

SEC. 20, T.41N., R. 2E., 3RD P.M.

GEORGE HARRY ROSS

BELLE C. & JOHN G. BOYLE, JR.

PROPOSED HH 25 (STA. 1781+85, 800' L)

STA. 1+26.46 END STAGE I PAVING

100' DIRECTIONAL BORING

520' DIRECT BURY

PROPOSED HH 24 (STA. 1781+85, 150' L)

680' DIRECT BURY

RIP RAP

ROCK FACE

280' DIRECTIONAL BORING

550' DIRECT BURY

STA. 22+40.90 END STAGE I PAVING

FACE OF EXCAVATED ROCK

PAVEMENT CONSTRUCTED BY OTHERS

TREE LINE

PROPOSED R.O.W. LINES

150' DIRECTIONAL BORING

250' DIRECTIONAL BORING

FACE OF EXCAVATED ROCK

510' PLACEMENT IN ROCK

~200' ROCK

768' DIRECT BURY

40' PLACEMENT IN ROCK

MATCH LINE STA. 1796+00

MATCH LINE STA. 1775+00

SW RAMP ℄

NE RAMP ℄

℄ PROPOSED FA 412

(I-39)

F.A. 412

1770 1775 1780 1785 1790 1795

TEMPORARY EASEMENTS

PAVEMENT CONSTRUCTED BY OTHERS

STA. 20+85.17 END STAGE I PAVING

STA. 1+26.46 END STAGE I PAVING

100' DIRECTIONAL BORING

50' DIRECT BURY

PROPOSED HH 26 (STA. 1781+85, 850' R)

MOVED TO END OF BORE

TEMPORARY EASEMENT

BELLE C. & JOHN G. BOYLE, JR.

GEORGE HARRY ROSS

BETTY EX. FARMS, INC.

SEC. 29, T.41N., R.2E., 3RD P.M.

SEC. 21, T.41N., R.2E., 3RD P.M.

ENCOUNTERED ROCK. COULD NOT BORE ALL THE WAY TO HANDHOLE. MOVED HH TO BETTER LOCATION. DUG TRENCH WITH BACKHOE. PLACED FIBER FROM END OF BORE TO H.H.

NOTES:

1. TEMPORARY EROSION CONTROL SEEDING SHALL BE PLACED EVERY SEVEN DAYS ON ALL DISTURBED AREAS THAT HAVE BEEN DISTURBED DURING INSTALLATION OF THE PROPOSED FIBER OPTIC CABLES IN ACCORDANCE WITH SECTION 251 OF THE STANDARD SPECIFICATIONS.

PLOT DATE = 12/14/2006
FILE NAME = C:\projects\6408613 (DOT)\c\shts\sht816_FO_Plan_18.dgn
PLOT SCALE = 1.0000 '/ IN.
USER NAME = jdeer

CONTRACT NO. 64063

RTE.	SECTION	COUNTY	SHEET NO.
39	141 20	*	42
STA. 1796+00		TO STA. 1860+00	
FED. ROAD DIST. NO.	ILLINOIS	FED. AID PROJECT	

*DOLE / WINNEBAGO

U.S. G.S. DATUM
5TH GA (1929)

SEC. 20, T.41N., R.2E., 3RD P.M.

FRANK K. COUNTRYMAN

P.O.T. 1817 + 51.02
1/2" SQ. STL. PIN

PROPOSED ROW LINES

PROPOSED HH 27
(STA. 1809+00, 170' L)

30' ROCK

520' DIRECT BURY

150' DIRECTIONAL BORING

730' DIRECT BURY

600'
NO ROCK

1800' PLACEMENT IN ROCK

FACE OF EXCAVATED ROCK

STA. 1796+00 MATCH LINE

MATCH LINE STA. 1828+40

STA. 1807+87.28 (FA 412)
= STA. 0+00 (NW RAMP)

STA. 1805+87.28 (FA 412)
= STA. 26+88.57 (NE RAMP)

℄ I-39

1800 1805 1810 1815 1825

SEC. LINE

P.L.

AC

+50 175'

+00 175'

+50 325'

+00 325'

TEMPORARY EASEMENT

SPLICE
PROPOSED HH 28
(STA. 1834+75, 120' L)

U.S. G.S. DATUM
5TH GA (1929)

SEC. 17, T.41N., R.2E., 3RD P.M.

LUCINDA HOLTMAN

SEC. 20, T.41N., R.2E., 3RD P.M.

FRANK K. COUNTRYMAN

CLARENCE W. HOLTMAN

PROPOSED ROW LINES

P.O.T. 1835 + 57.20
1/2" SQ. STL. PIN

P.O.T. 1851 + 21.67
1/2" SQ. STL. PIN

P.O.T. 1825 + 44.00
= 25+00 (MOWERS RD.)
1/2" SQ. STL. PIN

680' DIRECT BURY

150' DIRECTIONAL BORING

1660' DIRECT BURY

250' DIRECTIONAL BORING

475' DIRECT BURY

HH

89° 25' 42"

ADDED BORE
MOVED H.H.

MOWERS ROAD

R.O.W.

STA. 1828+40 MATCH LINE

1830 1835 1840 1845 1850 1855

℄ PROPOSED F.A. 412 (I-39)

+50 61.47'

+50 162.27'

+50 250'

+50 250'

TEMPORARY EASEMENT

NOTES:

1. TEMPORARY EROSION CONTROL SEEDING SHALL BE PLACED EVERY SEVEN DAYS WITHIN ALL AREAS THAT HAVE BEEN DISTURBED BY THE INSTALLATION OF THE PROPOSED FIBER OPTIC CABLES IN ACCORDANCE WITH SECTION 251 OF THE STANDARD SPECIFICATIONS.

PLOT DATE = 12/14/2006
FILE NAME = c:\projects\06-67\P-II 1001\Civil\Sht\1001F0 Pln 11.dgn
PLOT SCALE = 1.0000 '/ INCH
USER NAME = *USER#

CONTRACT NO. 64C83

F.A.I. RTE.	SECTION	COUNTY	SHEET NO.	SHEETS
39	14 / 20	1	45	18

STA. 1860+00 TO STA. 1924+00

FED. ROAD DIST. NO. ILLINOIS FED. AID PROJECT

OGLE / WINNEBAGO

U.S. G.S. DATUM
5TH GA (1929)

SEC. 17, T.41N., R.2E., 3RD P.M.

SEC. 8, T.41N., R.2E., 3RD P.M.

EVELYN R. LUND

EVELYN H. LUND

SEC. 9, T.41N., R.2E., 3RD P.M.

HEART'S DELIGHT ENTERPRISES, INC

MOVED HH #30 TO HERE

MATCH LINE STA. 1860+00

PROPOSED R.O.W. LINES

POT 1862 + 61.57
1/2" SQ. STL. PIN

PROPOSED HH 29
(STA. 1861+90, 185' L)

190' DIRECT BURY

POT 1874 + 44.93
1/2" SQ. STL. PIN

2635' DIRECT BURY

POT 1886 + 31.55
1/2" SQ. STL. PIN

PROPOSED HH 30
(STA. 1888+25, 120' L)

375' DIRECT BURY

(I-39)

℄ PROPOSED FA 412

1865 1870 1875 1880 1885 1890

AC

FO

F+44 F+69

F+23 F+41

℄ IVY FRONTAGE ROAD

40'R

R.O.W.

+50 194.51

+50 207.86

+00.98 275'

B.M.	ELEV.	DESCRIPTION
141-2-15	776.75	PK & WASHER IN BRACE POST, 145.7' RT. STA. 1861 + 52.3

PROPOSED HH 31
(STA. 1913+30, 120' L)

190' DIRECTIONAL BORING

P.C. 1900 + 17.35
1/2" SQ. STL. PIN

P.O.B.T. 1901 + 46.53
1/2" SQ. STL. PIN

P.O.B.T. 1908 + 18.55
1/2" SQ. STL. PIN

P.I. 1914 + 61.76
1/2" SQ. STL. PIN

POT 25+00.00 =
P.O.B.T. & 25' AHEAD
P.I. 1914 + 61.76 (FA 412)

F.G. LIMITS BEGIN
STA. 1908+00

2140' DIRECT BURY

GENEVIEVE W. ALCOCK

JEAN & MYRTLE A. BEARROWS

920' DIRECT BURY

TREE LINE

98° 10' 59"

MEDIAN CROSSOVER
STA. 1908+25

1895 1900 1905 1910 1915 1920

CURVE DATA
P.I. = 1914+61.76
Δ = 7° 41' 31"
D = 0° 12' 00"
R = 21,485.92'
T = 1444.41'

SEC. NOTES:

1. TEMPORARY EROSION CONTROL SEEDING SHALL BE PLACED EVERY SEVEN DAYS WITHIN THE AREAS THAT HAVE BEEN DISTURBED BY THE INSTALLATION OF THE PROPOSED FIBER OPTIC CABLES IN ACCORDANCE WITH SECTION 251 OF THE STANDARD SPECIFICATIONS.

PROPOSED R.O.W. LINES

PLOT DATE = 12/14/2888
FILE NAME = G:\ENG\96-9798-13 TDOT\Civil\Sht\SHT818_F0_P1+_12.dgn
PLOT SCALE = 40.0000 '/ INCH
PLOT STYLE = HIDDEN
USER NAME = rusern

CONTRACT NO. 64C83

F.A. RTE.	SECTION	COUNTY	SHEETS	SHEET NO.
39	141 / 201		48	19
STA. 1924+00	TO STA. 1985+00			
FED. ROAD DIST. NO.	ILLINOIS FED. AID PROJECT			
ROCKFORD / WINNEBAGO				

U.S. G.S. DATUM
5TH GA (1929)

SEC. 8, T.41N., R.2E., 3RD P.M.

PROPOSED HH 32
(STA. 1936+25, 85' L)

JESSIE E. STOCKING

STA 1936+44
40' LT. - INLET BOX C STD 2324
75' LT. - INLET BOX D STD 2324

STA 1927+69
INLET BOX SPECIAL
80' LT. & 782.40
16" PIPE DRAIN 12
SEE SPECIAL DRAWING SHEET NO. 6

P.T. 1929+01.83
1/2" SQ. STL. PIN

P.O.T. 20+00.25 AHEAD
1927+23.44 (FA 412)
1/2" SQ. STL. PIN

1250' DIRECT BURY

INLET BOX SPECIAL
80' LT. & 782.66
16" PIPE DRAIN 12
SEE SPECIAL DRAWING

BRIDGE APPROACH PAVEMENTS (STD. 2355)
STAS. 1935+35.58 - 1936+35.58 & 1940+91.25 - 1941+91.25
STAS. 1935+59.58 - 1936+59.58 & 1940+91.25 - 1941+91.25
REINFORCEMENT BARS 30,380 LBS.
BRIDGE APPROACH PAVEMENT 1068 SQ. YDS.

STA. 1935+20
40' RT. - INLET BOX C STD 2324
75' RT. - INLET BOX D STD 2324

INLET BOX SPECIAL
80' LT. & 782.66
16" PIPE DRAIN 12
SEE SPECIAL DRAWING

500' BRIDGE ATTACHMENT (SEE DETAIL)

℄ PROPOSED F.A. 412 (I-39)

SPLICE

PROPOSED HH 33
(STA. 194)+25, 85' L)

SCALD & DOROTHY ALCOCK

PROPOSED R.O.W.

DONALD & DOROTHY ALCOCK

1470' DIRECT BURY

B.M.	ELEV.	DESCRIPTION
141-2-22	778.64	PK & WASHER IN ROOT OF 12" FENCE LINE 230' RT. STA. 1930+00
141-2-23	775.62	PK & WASHER IN ROOT OF 40" 190' LT. STA. 1940+00

U.S. G.S. DATA
5TH GA (1929)

SEC. 5, T.41N., R.2E., 3RD P.M.

DONALD & DOROTHY ALCOCK

MOVED HH AND EXTENDED BORE

PROPOSED HH 34
(STA. 1966+40, 95' L)

P.I. 1968+12.85
1/2" SQ. STL. PIN

P.O.P.T. 66.03' AHEAD
P.I. 1966+12.85 (FA 412)
= P.O.T. 25+00 (OGILDWD. RD.)

P.T. 1982+30.71
1/2" SQ. STL. PIN

MATCH LINE STA. 1955+00

MATCH LINE STA. 1986+00

200' DIRECTIONAL BORING

FG LIMITS END
STA. 1967+12

150' DIRECTIONAL BORING

1045' DIRECT BURY

1505' DIRECT BURY

325' DIRECT BURY

PROPOSED R.O.W. LINES

TREE LINE

℄ PROPOSED F.A. 412 (I-39)

CURVE DATA
P.I. = 1968+12.85
Δ = 21° 52' 33"
D = 0° 40' 00"
R = 8594.39'
T = 166.35'
L = 328.21'
E = 159.10'

NOTES:
1. TEMPORARY EROSION CONTROL SEEDING SHALL BE PLACED EVERY SEVEN DAYS WITHIN THOSE AREAS THAT HAVE BEEN DISTURBED BY THE INSTALLATION OF THEPROPOSED FIBER OPTIC CABLES IN ACCORDANCE WITH SECTION 280 OF THE STANDARD SPECIFICATIONS.

PLOT DATE = 12/1/2005
FILE NAME = c:\projects\95-6798 13 1001\dgn\95t1301_fo_plan_13.dgn
FOOTAGE = 4,194,304
USER NAME = ausern

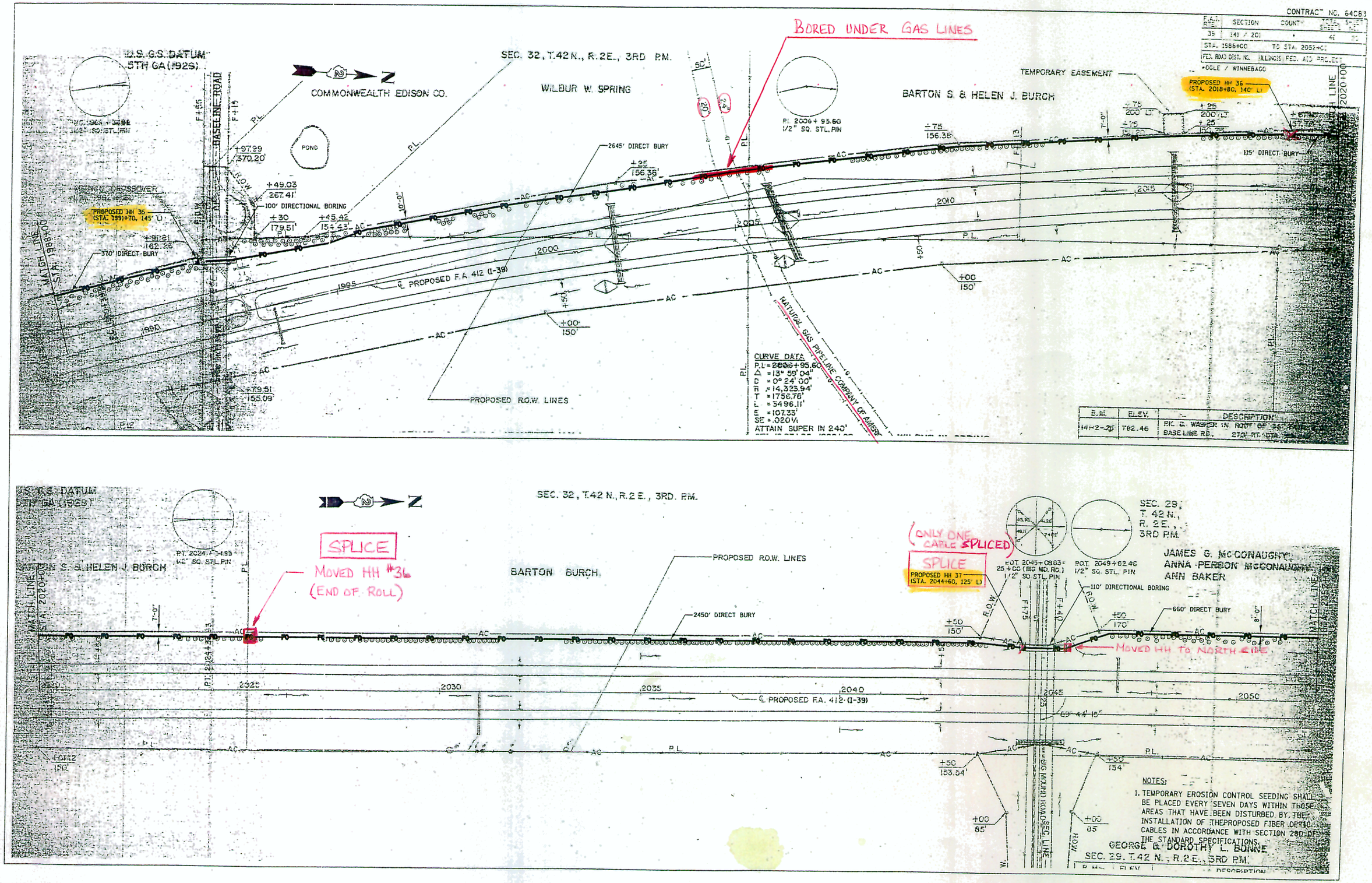

CONTRACT NO. 64083
BORED UNDER GAS LINES
U.S.G.S. DATUM 5TH GA (1929)
SEC. 32, T.42 N., R.2 E., 3RD P.M.
COMMONWEALTH EDISON CO.
WILBUR W. SPRING
BARTON S. & HELEN J. BURCH
TEMPORARY EASEMENT
PROPOSED HH 36 (STA. 2018+80, 140' L)
PROPOSED HH 35 (STA. 1991+70, 145' L)
BASELINE ROAD
POND
2645' DIRECT BURY
100' DIRECTIONAL BORING
370' DIRECT BURY
115' DIRECT BURY
℄ PROPOSED F.A. 412 (I-39)
PROPOSED R.O.W. LINES
NATURAL GAS PIPELINE COMPANY OF AMERICA
CURVE DATA
P.I. = 2006+95.60
Δ = 13° 59' 04"
D = 0° 24' 00"
R = 14,323.94'
T = 1756.76'
L = 3496.11'
E = 107.33'
SE = .020 1/4
ATTAIN SUPER IN 240'
MATCH LINE STA. 1988+00
MATCH LINE STA. 2020+00
SEC. 32, T.42 N., R.2 E., 3RD. P.M.
SEC. 29, T. 42 N., R. 2 E., 3RD P.M.
SPLICE
MOVED HH #36 (END OF ROLL)
BARTON BURCH
PROPOSED R.O.W. LINES
2450' DIRECT BURY
(ONLY ONE CABLE SPLICED)
SPLICE
PROPOSED HH 37 (STA. 2044+60, 125' L)
P.O.T. 2045+08.63 = 25+00 (BIG MD. RD.) 1/2" SQ. STL. PIN
P.O.T. 2049+62.46 1/2" SQ. STL. PIN
110' DIRECTIONAL BORING
660' DIRECT BURY
JAMES G. McCONAUGHY
ANNA PERRON McCONAUGHY
ANN BAKER
MOVED HH TO NORTH SIDE
℄ PROPOSED F.A. 412 (I-39)
BIG MOUND ROAD SEC. LINE
NOTES:
1. TEMPORARY EROSION CONTROL SEEDING SHALL BE PLACED EVERY SEVEN DAYS WITHIN THOSE AREAS THAT HAVE BEEN DISTURBED BY THE INSTALLATION OF THE PROPOSED FIBER OPTIC CABLES IN ACCORDANCE WITH SECTION 280 OF THE STANDARD SPECIFICATIONS.
GEORGE & DOROTHY L. BONNE
SEC. 29, T.42 N., R.2 E., 3RD P.M.

CONTRACT NO. 64083

RTE.	SECTION	COUNTY	TOTAL SHEETS	SHEET NO.
39	141 / 201	*	##	##
STA. 2052+00		TO STA. 2091+00		
FED. ROAD DIST. NO.		ILLINOIS FED. AID PROJECT		
*OGLE / WINNEBAGO				

U.S. G.S. DATUM
5TH GA (1929)

SEC. 29, T.42 N. R.2E., 3RD P.M.

JAMES G. McCONAUGHY, ANNA PERSON McCONAUGHY, & ANN BAKER

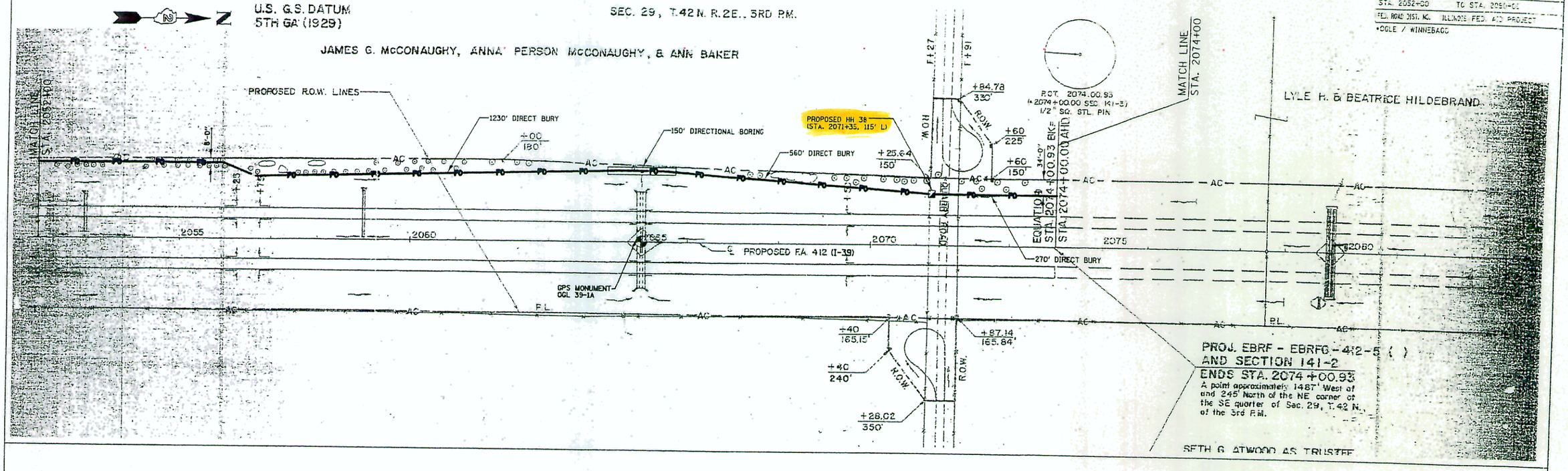

U.S.G.S. DATUM
5TH GA (1929)

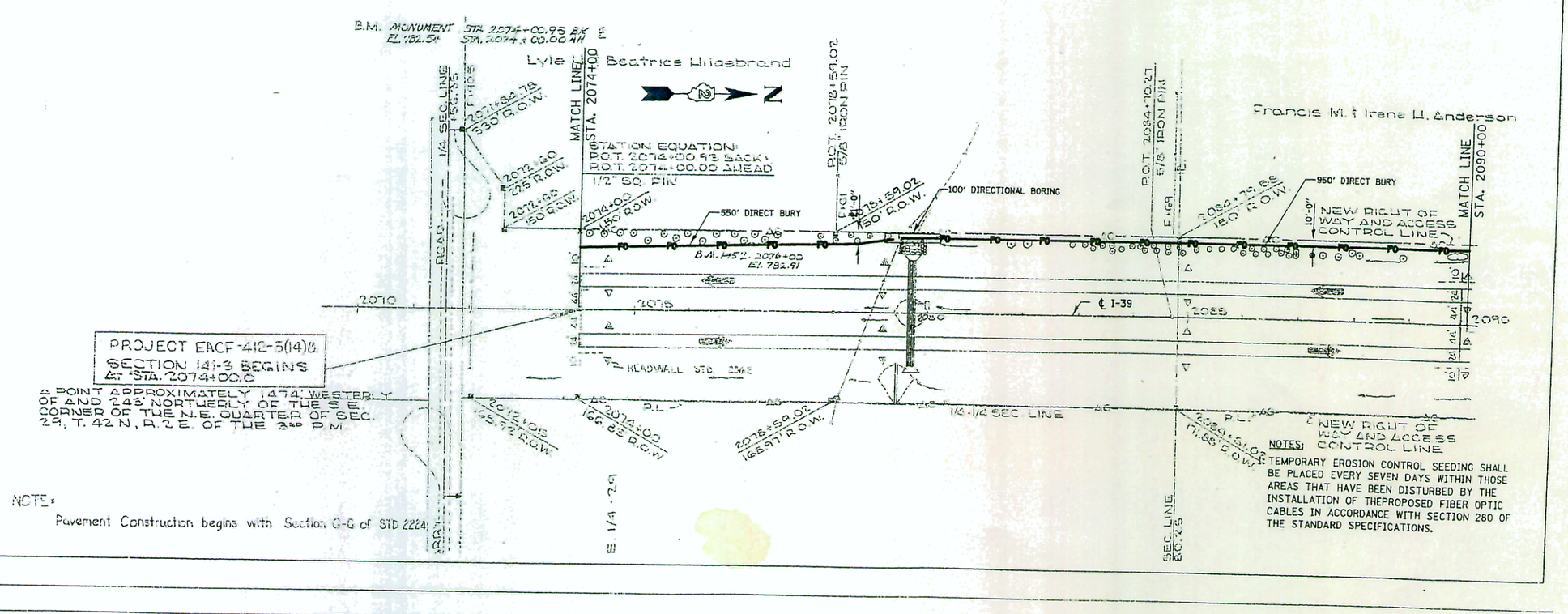

PROJECT EACF-412-5(14)B
SECTION 141-3 BEGINS
AT STA. 2074+00.0
A POINT APPROXIMATELY 1474' WESTERLY OF AND 243' NORTHERLY OF THE S.E. CORNER OF THE N.E. QUARTER OF SEC. 29, T. 42 N., R. 2 E. OF THE 3RD P.M.

NOTE:
Pavement Construction begins with Section G-G of STD 2224

NOTES:
1. TEMPORARY EROSION CONTROL SEEDING SHALL BE PLACED EVERY SEVEN DAYS WITHIN THOSE AREAS THAT HAVE BEEN DISTURBED BY THE INSTALLATION OF THEPROPOSED FIBER OPTIC CABLES IN ACCORDANCE WITH SECTION 280 OF THE STANDARD SPECIFICATIONS.

PLOT DATE = 12/14/2006
FILE NAME = G:\ENGR\BG 67M 13 100\Cad\Sht\SHTB21_FO_Plan_15.dgn
PLOT SCALE = #SCALE#
USER NAME = #USER#

CONTRACT NO. 64083

F.A.I. RTE.	SECTION	COUNTY	TOTAL SHEETS	SHEET NO.
39	14 / 20	*	48	22
STA. 2090+00	TO STA. 2140+00			
FED. ROAD DIST. NO.	ILLINOIS FED. AID PROJECT			

*OGLE / WINNEBAGO

Francis M. & Irene L. Anderson
B.M. MONUMENT 17' RT.
STA. 2091+96 EL. 787.08

B.M. MONUMENT STA. 2098+05.08 ℄
EL. 796.81

Herman E. Demerce
LT STA 2106+30
88' PIPE DRAINS - 12"
1 - 18° ELBOW
END SECTION - 12"
1 INLET SPECIAL
0.3 C.Y. CLASS X CONC.

Herman E. Demerce
RT 2108+00
95' PIPE DRAINS - 12"
1 - 18° ELBOW
END SECTION - 12"
1 INLET SPECIAL
0.5 C.Y. CLASS X CONC.

B.M. MONUMENT STA. 2106+70 ℄
EL. 804.85

RT & LT 2110+27.87
168' PIPE DRAINS - 12"
2 - ELBOWS (24° & 25°)
2 METAL END SECS - 12"
2 TYPE D INLET BOX (SPEC.)
2 TYPE C INLET BOX (SPEC.)
FROM S.T. 12"
FL. OUT TYPE C 809.3
IN TYPE D 810.0
FL. CUT TYPE D 809.7

B.M. MONUMENT S.E. WING N.B. ST. - 74.5' RT
STA. 2110+31.4 ELEV. 816.58
L. F. Demerce

L&R STA. 2112+21.2
164' PIPE DRAIN 12"
64' PIPE DRAIN 4"
2 ELBOWS (25°) 12"
2 TYPE D INLET BOX SPEC.
2 END SECTIONS 12"

L & R STA. 2117+80
184' PIPE DRAIN 12"
2 ELBOWS (18°) 12"
2 END SECTIONS 12"
2 INLET SPECIAL

B.M. MONUMENT STA. 2112
EL. 814.34

MATCH LINE STA. 2090+00
MATCH LINE STA. 2120+00
MATCH LINE STA. 2140+00

PROPOSED HH 39 (STA. 2098+05, 140' L)
PROPOSED HH 40 (STA. 2110+15, 80' L)
PROPOSED HH 41 (STA. 2112+25, 80' L)
PROPOSED HH 42 (STA. 2123+70, 200' L)
PROPOSED HH 43 (STA. 2123+70, 120' R)

NEW RIGHT OF WAY AND ACCESS CONTROL LINES

2025' DIRECT BURY
790' DIRECT BURY
370' DIRECT BURY
315' DIRECTIONAL BORING
570' DIRECT BURY
200' DIRECTIONAL BORING
385' DIRECT BURY
175' DIRECT BURY
100' DIRECTIONAL BORING
200' DIRECTIONAL BORING

BORE
RIP RAP
EXCELSIOR BLANKET
MEDIAN CROSSOVER STA. 2090+55
℄ I-39
GPS MONUMENT DGL 39-1B
HEADWALL STD 2362
BITT. CONC. CURB
210' BRIDGE ATTACHMENT (SEE DETAIL)
EXISTING F.O.
EXISTING GAS
CHANNEL RELOCATION SURVEY ℄

EXCELSIOR BLANKET (12' WIDE)
STA. 2099+00 - 2103+00 (MED.) 533 S.Y.

APPROACH SLAB

B.M. MONUMENT U.S.G.S. C.S. 115'R. STA. 2124+07.5 N FA 412 = EL. 784.12
43.1' R. STA. 670+62.5 FA 72

SCALE: 1" = 100'

ILL. RTE. 72
P.O.T. STA. 662+82.87 =
RAMP C-A / C-B
P.I. STA. 24+87.28

ILL. RTE. 72
P.O.T. STA. 663+19.87 =
RAMP A-D / B-D
P.I. STA. 30+00.00

RAMP C-A / C-B
RAMP A-D / B-D
EXIT A-D / D-B
EXIT C-A / C-B
ROUTE 72

CURVE DATA:
P.I. STA. 37+52.14 ℄
P.I. STA. 40+63.33
Δ = 71°-34'-38"
D = 23°-00'
R = 249.11'
T = 179.58'
L = 311.20'
E = 87.98'
S = 0.08%
ATTAIN SUPERS IN 142' L
STA. 35+25-36+69
STA. 44+03-46+35

CURVE DATA:
P.I. STA. 42+65.74
Δ = 21°-00'
D = 15°-00'
R = 381.97'
T = 70.79'
L = 140.00'
E = 6.50'

CURVE DATA:
P.I. STA. 44+35.52
Δ = 15°-00'
D = 7°-30'
R = 763.94'
T = 100.58'
L = 200.00'

CURVE DATA:
P.I. STA. 52+00.55

CURVE DATA:
P.I. STA. 16+72.88
Δ = 49°-20'-14"
D = 12°-00'
R = 477.46'
T = 219.29'
L = 411.14'
E = 47.98'
S = 0.08%
ATTAIN SUPED IN 168'
STA. 13+52-15+10
STA. 18+09-19+77

CURVE DATA:
P.I. STA. 9+24.42
Δ = 46°-01'-08"
D = 7°-30'
R = 763.94'
T = 324.42'
L = 612.59'
E = 66.03'
S = 0.08%
ATTAIN SUPERS IN STA. 7+75-7+87
STA. 10+50-13+42

P.I. STA. 22+00.56 =
114.59' RT. STA. 2131+60.30

P.I. STA. 97+30.78 =
97.14' RT. 2139+06.52

P.I. STA. 55+70.73

P.I. STA. 44+55.52 =
42.01' LT. STA. 2124+50.64

1" STUB: 69' LT STA. 2110+00.0

1" STUB: 69' RT STA. 2122+34.42

1" STUB: 69' LT STA. 2143+34.86

1" STUB: 69' RT STA. 2155+15.99

NOTES:
1. TEMPORARY EROSION CONTROL SEEDING SHALL BE PLACED EVERY SEVEN DAYS WITHIN THOSE AREAS THAT HAVE BEEN DISTURBED BY THE INSTALLATION OF THE PROPOSED FIBER OPTIC CABLES IN ACCORDANCE WITH SECTION 280 OF THE STANDARD SPECIFICATIONS.

PLOT DATE = 12/14/2006
FILE NAME = D:\ENGNEW\96-6798-13 IDOT\Civil\SHEETS\H922-FO_Plan_16.dgn
PLOT SCALE = 1 SCALES
USER NAME = USDEFA

CONTRACT NO. 64C83

F.A.I. RTE.	SECTION	COUNTY	TOTAL SHEETS	SHEET NO.
39	14 / 20	*	46	03
STA. 2140+00		TO STA. 2180+00		
FED. ROAD DIST. NO.	ILLINOIS	FED. AID PROJECT		
*OGLE / WINNEBAGO				

B.M. MONUMENT STA. 2123+60 ℄
EL. 807.21
Herman F. Deneke

B.M. MONUMENT STA. 669+47.00 EL. 771
EL. 785.22 STA. 2124+50.57 ℄
John M. Olson

B.M. MONUMENT 893'L STA. 2125+36.5
EL. 808.76
B.M. MONUMENT STA. 2131+00
EL. 797.22

B.M. MONUMENT 176' RT
STA. 2144+00 ELEV 794.96
J. M. Olson

NEW RIGHT OF WAY AND ACCESS CONTROL LINE

P.O.T. 2124+13.31 5/8" IRON PIN GG7110 115' R.O.W.

2123+10 210' R.O.W.

P.O.T. 2124+50.57 NAIL & WASHER IN P.O.T. GG7+47.00

LT & RT 2125+46.57
200'- 12" PIPE DRAINS
90'- STORM SEWER T-1, 12"(44'L & 46'R)
2 - 10° ELBOWS
2 - END SECTIONS - 12"
4 - TYPE C INLET BOX (SPEC.)
FOR R. SEE SHEET

RAMP A-D/6-C

RAMP C-A/6-B

RAMP C-A/10-B

RAMP A-C/8-C

1/4 SEC. LINE 12+27+27.28 8" 38 R.O.W.

MATCH LINE STA. 2140+00

2140+00 205' R.O.W.

1000' DIRECT BURY

2145+00 205' R.O.W.

MATCH LINE STA. 2150+00

2150+00 205' R.O.W.

℄ I-39

2123+25 200' R.O.W.

1/4-20 G71+75 100' R.O.W.

1/4-20

APPROACH SLAB (SOUTH)

BRIDGE APPROACH PAVEMENT	783.7	SQ. YD.
REINFORCEMENT BARS	25,180	LBS.

APPROACH SLAB (NORTH)

BRIDGE APPROACH PAVEMENT	95.7	SQ. YD
REINFORCEMENT BARS	3,039.0	LBS.
P.C.C. BRIDGE APPROACH SHLDR. PAV'T.	21.4	SQ. YD.

TOP OF BASE OF NOISE BARRIER

2141+16.4 GO 196.77 R.O.W.

2146+00 197.34 R.O.W.

NEW RIGHT OF WAY AND ACCESS CONTROL LINE

John M. Olson

B.M. MONUMENT STA. 2151+04.78 ℄
EL. 799.55

B.M. MONUMENT STA. 2158+00 ℄
EL. 805.54

Floyd R. & Evelyn Eddy

B.M. MONUMENT 147.5' LT.
STA. 2165+01.5 ELEV. 805.14

B.M. MONUMENT STA. 2167+00 ℄
EL. 807.44

Ansil D. Oster

MATCH LINE STA. 2150+00

2150+00 150' R.O.W.

2151+15 33 R.O.W.

50' DIRECT BURY

2152+00 300' R.O.W.

2152+00 150' R.O.W.

P.O.T. 2153+80.35 5/8" IRON PIN

2154+00 190' R.O.W.

1810' DIRECT BURY

2152+00 150' R.O.W.

NEW RIGHT OF WAY AND ACCESS CONTROL LINE

B.M. 147.5' L. 2165+01.5 EL. 805.14

150' DIRECTIONAL BORING

2168+00 150' R.O.W.

750' DIRECT BURY

2177+00 40' R.O.W.

P.O.T. 2177+51.36 5/8" IRON PIN

MATCH LINE STA. 2180+00

2179+00 40' R.O.W.

PROPOSED HH 44 (STA. 2150+50, 180' L)
SPLICE

PROPOSED HH 45 (STA. 2177+50, 182' L)

250' DIRECT BURY

MEDIAN CROSSOVER STA. 2170+52

HEADWALL STD. 2362

B.M. 2167+00 ℄ EL. 807.44

TOP OF BASE OF NOISE BARRIER

P.O.T. 2151+04.78 P.O.T. 223+00.0 5/8" IRON PIN

2151+05.56 144.12 R.O.W.

2154+00 200.56 R.O.W.

2160+00 204.55 R.O.W.

2166+00 206.51 R.O.W.

2172+00 209.47 R.O.W.

TEL PED. TEL PED. TEL PED. TEL PED.

METAL SHED

EDDY ROAD JE+04.78

KNOLLS EDGE SUBDIVISION

P.L. 1/4-1/4 SEC. LINE

NOTES:
1. TEMPORARY EROSION CONTROL SEEDING SHALL BE PLACED EVERY SEVEN DAYS WITHIN THOSE AREAS THAT HAVE BEEN DISTURBED BY THE INSTALLATION OF THEPROPOSED FIBER OPTIC CABLES IN ACCORDANCE WITH SECTION 280 OF THE STANDARD SPECIFICATIONS.

PLOT DATE = 12/14/2006
FILE NAME = G:\ENGR\95-8798 13 1001\Civil\Sht\Sht823_FO_Pln.17.dgn
PLOT SCALE = 40.0000 '/ In.
USER NAME = dlSFR6

CONTRACT NO. 64C83

F.A.I. RTE.	SECTION	COUNTY	TOTAL SHEET SHEETS	NO.
39	141 / 201	•	46	24
STA. 2180+00		TO STA. 2240+00		
FED. ROAD DIST. NO.	ILLINOIS	FED. AID PROJECT		
•OGLE / WINNEBAGO				

B.M. MONUMENT 215 RT.
STA. 2184+00 ELEV. 809.51
Ansil R. Foster

B.M. MONUMENT STA. 2198+33.45 ℄
EL. 818.45

B.M. MONUMENT 179.5 LT.
STA. 2205+46 ELEV. 829.38

MATCH LINE STA. 2180+00

MATCH LINE STA. 2210+00

100' DIRECT BURY

150' DIRECTIONAL BORING

NEW RIGHT OF WAY AND ACCESS CONTROL LINE

2182+00 150' R.O.W.

34'-0"

2188+50 150' R.O.W.

1560' DIRECT BURY

2198+00 150' R.O.W.

2199+50 178.90' R.O.W.

POT 2198+33.45 5/8" IRON PIN

POT 2198+47.11 POT 2194+00.00 5/8" IRON PIN

Lawrence M. & Vivian E. Degenhardt

ROAD 2199+00 218.90' R.O.W.

2199+50 150' R.O.W.

PEL+96

PIPE '05

400' DIRECT BURY

POT 2203+79.20 5/8" IRON PIN

POT 2206+10.06 5/8" IRON PIN

Mary Jo Hall

Raymond & Mary N. Hall

POT 2209+86.38 5/8" IRON PIN

2203+98.13 150' R.O.W.

2207+79.20 150' R.O.W.

30'-0"

150' DIRECTIONAL BORING

640' PLACEMENT IN ROCK

2180 2185 2190 ℄ I-39 2195 2200 2205 2210

PROPOSED HH 46 (STA. 2198+00, 150' L)

HEADWALL STD. 2362

2184+00 215.40' R.O.W.

2190+50 218.61' R.O.W.

1/4-1/4 SEC. LINE

2197+00 221.67' R.O.W. 215' R.O.W.

47+00 R.O.W.

DRILL ROAD

47+00 R.O.W.

METAL SHED

BARN

2201+00 190.00' R.O.W.

2204+00 228.28' R.O.W.

2207+13.20 228.41' R.O.W.

1/4-17 SEC. LINE 194.12'

1/4-18

NEW RIGHT OF WAY AND ACCESS CONTROL LINE

B.M. MONUMENT STA. 2210+00
EL. 828.16

B.M. MONUMENT STA. 2222+80 ℄
EL. 815.81

B.M. MONUMENT 146.5 LT.
STA. 2228+96 ELEV. 815.16
Raymond & Mary N. Hall

B.M. MONUMENT STA. 2255+00 ℄
EL. 796.94

MATCH LINE STA. 2210+00

2211+00 150' R.O.W.

PROPOSED HH 47 (STA. 2217+25, 120' L)

2217+24.64 150' R.O.W.

30'-0"

POT 2221+50.41 5/8" IRON PIN

NEW RIGHT OF WAY AND ACCESS CONTROL LINE

PROPOSED HH 48 (STA. 2230+50, 120' L)

S.E. 1/4-8

N.E. 1/4-8

1320' DIRECT BURY

2230+50.76 150' R.O.W.

2231+50 150' R.O.W.

150' DIRECTIONAL BORING

690' DIRECT BURY

2230+50 70' R.O.W.

11'-0"

APPROX. LOC. EXIST. FIELD TILE

MATCH LINE STA. 2240+00

2240+00 70' R.O.W.

ROCK

800' PLACEMENT IN ROCK

2210 2215 2220 ℄ I-39 2225 2230 2235 2240

EXCELSIOR BLANKET (500 SQ. YDS.)

HEADWALL STD. 2362

120' DIRECT BURY

NEW RIGHT OF WAY AND ACCESS CONTROL LINE

2212+25 220.63' R.O.W.

EXIST.

2217+26.72 217.80' R.O.W.

2224+00 214.01' R.O.W.

PL

1/4-1/4 SEC. LINE

1/4 SEC. LINE 1253

EXCELSIOR BLANKET
STA. 2225+00 - 2229+00 (MEDIAN) - 500 SQ. YDS.

1/4 SEC. LINE 1516

2230+52.90 210.32' R.O.W.

2233+00 206.66' R.O.W.

APPROX. LOC. EXIST. FIELD TILES

205.84' RT. 2236+46.22

NOTES:

1) TEMPORARY EROSION CONTROL SEEDING SHALL BE PLACED EVERY SEVEN DAYS WITHIN THOSE AREAS THAT HAVE BEEN DISTURBED BY THE INSTALLATION OF THE PROPOSED FIBER OPTIC CABLES IN ACCORDANCE WITH SECTION 280 OF THE STANDARD SPECIFICATIONS.

PLOT DATE = 12/14/2006
FILE NAME = G:\ENGCUS\67982-13 IDOT\Civil\SHT\R24 FO Plan.18 dgn
PLOT SCALE = 1.0000 '/ In.
USER NAME = #USER#

CONTRACT NO. 64C83

F.A. RTE.	SECTION	COUNTY	TOTAL SHEETS	SHEET NO.
35	141 / 201	*	46	25
STA. 2240+00	TO STA. 2300+00			
FED. ROAD DIST. NO.	ILLINOIS	FED. AID PROJECT		

*OGLE / WINNEBAGO

Raymond & Mary N. Wall

B.M. MONUMENT 201' RT
STA 2243+79 ELEV. 801.11
Eddie Clankie

B.M. MONUMENT STA. 2255+00 ℄
EL. 811.41

B.M. MONUMENT 2257+04 ℄
CENTER CRASHWALL EL. 816.35

Maynard W. Troxell

MATCH LINE STA. 2240+00

2240+00 70' R.O.W.

2243+00 180' R.O.W.

2243+79.80 180' R.O.W.

2246+00 150' R.O.W.

11'-0"

APPROX. LOC. EXIST 6" FIELD TILES

1475' DIRECT BURY

2251+00 150' R.O.W.

POT 2255+00.00 POT 201+00.00 5/8" IRON PIN

2256+00 70' R.O.W.

POT 2257+12.75 5/8" IRON PIN

2256+00 90' R.O.W.

SE. 1/4-S

2262+00 70' R.O.W.

APPROX LOC EXIST FIELD TILE (DH)

1215' DIRECT BURY

2265+00 150' R.O.W.

23'-0"

MATCH LINE STA. 2270+00

NEW RIGHT OF WAY AND ACCESS CONTROL LINE

Underdrain

150' DIRECTIONAL BORING

℄ I-39

PROPOSED HH 49 (STA. 2256+20, 100' L)
SPLICE

HEADWALL STA. 2262

170' DIRECTIONAL BORING

NEW RIGHT OF WAY AND ACCESS CONTROL LINE

1/4-1/4 SEC. LINE

PL 2250+00 199.35' R.O.W.

2256+10 195.91' R.O.W.

2257+20 70' R.O.W.

2258+00 195.63' R.O.W.

1/4-1/4 SEC. LINE

PL 2268+00 198.45' R.O.W.

2202+79.02 202.85' R.O.W.

SEC. LINE 177.67

BM ⌀ L.P.

4-S

McNEAL

SOUTH LINE SEC. 5-42-2

2261+01.27 196.44' R.O.W.

James & Betty Hackworth

B.M. MONUMENT
147' LT. STA. 2275+00 ELEV. 843.53
Maynard W. Troxell

B.M. MONUMENT STA 2288+54.45 ℄
ELEV. 846.35

John E. & Dorothy Carlson

MATCH LINE STA. 2270+00

2271+00 150' R.O.W.

NEW RIGHT OF WAY AND ACCESS CONTROL LINE

23'-0"

1350' DIRECT BURY

2277+00 150' R.O.W.

2282+00 80' R.O.W.

POT 2283+54.45 5/8" IRON PIN

2283+49.92 80' R.O.W.

PROPOSED HH 50 (STA. 2283+50, 170' L)

1300' PLACEMENT IN ROCK

2288+75 80' R.O.W.

19'-0"

2294+00 80' R.O.W.

150' DIRECTIONAL BORING

200' DIRECT BURY
B.N. 146.6' L.
EL. 831.7

2298+54

2298+00 150' R.O.W.

8'-0"

MATCH LINE STA. 2300+00

2276+00 200.46' R.O.W.

APPROX LOC EXIST 4" FIELD TILE

1/4 SEC. LINE

2288+52.11 204.28' R.O.W.

2290+00 204.21' R.O.W.

2295+50 198.45' R.O.W.

NEW RIGHT OF WAY AND ACCESS CONTROL LINE

1/4-S

SEC. LINE+50.95

1/4-S

NOTES:
1. TEMPORARY EROSION CONTROL SEEDING SHALL BE PLACED EVERY SEVEN DAYS WITHIN THOSE AREAS THAT HAVE BEEN DISTURBED BY THE INSTALLATION OF THEPROPOSED FIBER OPTIC CABLES IN ACCORDANCE WITH SECTION 280 OF THE STANDARD SPECIFICATIONS.

PLOT DATE = 12/14/2006
FILE NAME = C:\Projects\07T0813 100T\Civil\SHT1825.FD Pln 19.dgn
PLOT SCALE = 4'SCALE'
USER NAME = RJSCH

CONTRACT NO. 64C83

F.A. RTE.	SECTION	COUNTY	TOTAL SHEETS	SHEET NO.
39	141 / 2C	*	46	2E
STA. 2300+00	TO STA. 2325+00			
FED. ROAD DIST. NO.	ILLINOIS FED. AID PROJECT			
*OGLE / WINNEBAGO				

B.M. MONUMENT STA. 2301+49.34 ℄ ELEV. 827.77

J. E. & D. A. CARLSON

TOWNSHIP LINE

B.M. MONUMENT STA. 2309+00.58 BK ℄ STA. 2309+00.00 AH ℄ EL. 811.3

T42N - R2E OF THE 3RD P.M.

T43N - R2E OF THE 3RD P.M.

SE 1/4 - 32

NE 1/4 - 5

MATCH LINE STA. 2300+00

P.O.T. STA. 2301+49.34 = 3/4" IRON PIN, SURFACE

150' R.O.W.

900' DIRECT BURY

9'-0"

HEADWALL STD. 2362

℄ I-39

PROPOSED HH 51 (STA. 2309+00, 141' L)

2308.91 BACK 340' R.O.W.

NEW R.O.W. LINE

MATCH LINE STA. 2309+00

2308.70 150' R.O.W.

EDSON ROAD

FENCE LINE

GAS

VERIZON

NOTE: CUL-DE-SACS TO BE CONSTRUCTED BY OTHERS UNDER SECTION 201-1.

STATION EQUATION: P.O.T. STA. 2309+00.58 BACK = P.O.T. STA. 2309+00.00 AHEAD 3/4" ℄ IRON PIN

℄ OF PROPOSED F.A.P. 412

P.O.T. STA. 2309+23.51 FAP 412 = P.O.T. STA. 20+00.00 EDSON RD. RAILROAD SPIKE

E-W SECTION LINE

NEW RIGHT OF WAY AND ACCESS CONTROL LINE

2308+00 209.03' E.O.W.

2308+00 260' R.O.W.

2308+96.40 BACK 360' R.O.W.

22" ℄ HIGH-PRESSURE GAS MAIN

SECTION 141-3 ENDS AT STA. 2309+00.58

A POINT APPROXIMATELY 1500' WESTERLY OF AND 23' SOUTHERLY OF THE N.E. CORNER OF SEC. 5, T42N, R.2E. OF THE 3RD P.M.

J.S.C. & G.S. DATUM
SEA LEVEL 1929

SEC. 5 T.42N. R.2E. OF 3RD P.M.
OGLE COUNTY

F.A. PROJECT
SECTION 201-1-1 BEGINS
STA. 2309+00.00 AHD.
= STA. 2309+00.58 BK.

A POINT 1500.93 FEET WEST AND 23.51 FEET SOUTH OF THE S.E. CORNER OF SECTION 32, T. 43 N., R. 2 E. OF THE 3RD P.M.

S.M. MONUMENT 147.5' LT. STA. 2317+52 EL. 794.77

S.M. MONUMENT STA. 2324+00 ℄ EL. 787.00

SEC. 32, T.43N., R.2E. OF 3RD P.M.

WINNEBAGO COUNTY

100 0 100 FT.
GRAPHIC SCALE

EDSON ROAD

16+60

R.O.W. 16+60

11'-11" LT. 11+31

F.A. ROUTE 412 STA. 2309+23.51 = STA. 20+00.00 EDSON ROAD

JOHN E. & DOROTHY A. CARLSON

MATCH LINE STA. 2309+00

MATCH LINE STA. 2325+00

100' DIRECTIONAL BORING

815' DIRECT BURY

315' DIRECT BURY

150' DIRECTIONAL BORING

220' DIRECT BURY

AD. EQV. = 60"

36" ℄

INV. 795.20

INV. 795.00

℄ F.A. ROUTE 412 (I-39)

R.R. SPIKE

89° 37' 10"

21+77.28 P.I.

23+60

2305 2310 2315 2320 2325

MEDIAN CROSS-OVER STA. 2316+90 SEE SURFACING DETAIL, SHEET 6

GLADYS MARIE (POLSON) HILDEBRAND

GENERAL TEL. OF ILL. COM. EDISON CO.

FD. CONC. MON. & BRASS PLUG

NOTES:

1. TEMPORARY EROSION CONTROL SEEDING SHALL BE PLACED EVERY SEVEN DAYS WITHIN THOSE AREAS THAT HAVE BEEN DISTURBED BY THE INSTALLATION OF THEPROPOSED FIBER OPTIC CABLES IN ACCORDANCE WITH SECTION 280 OF THE STANDARD SPECIFICATIONS.

PLOT DATE = 12/14/2006
FILE NAME = D:\ENGD\06-6798-13 100T\Civil\Sht\SH1026 F0.plt
PLOT SCALE = 1.0000 '/ INCH
PLOT SCALE = 40.0000 '/ INCH
USER NAME = eszeto

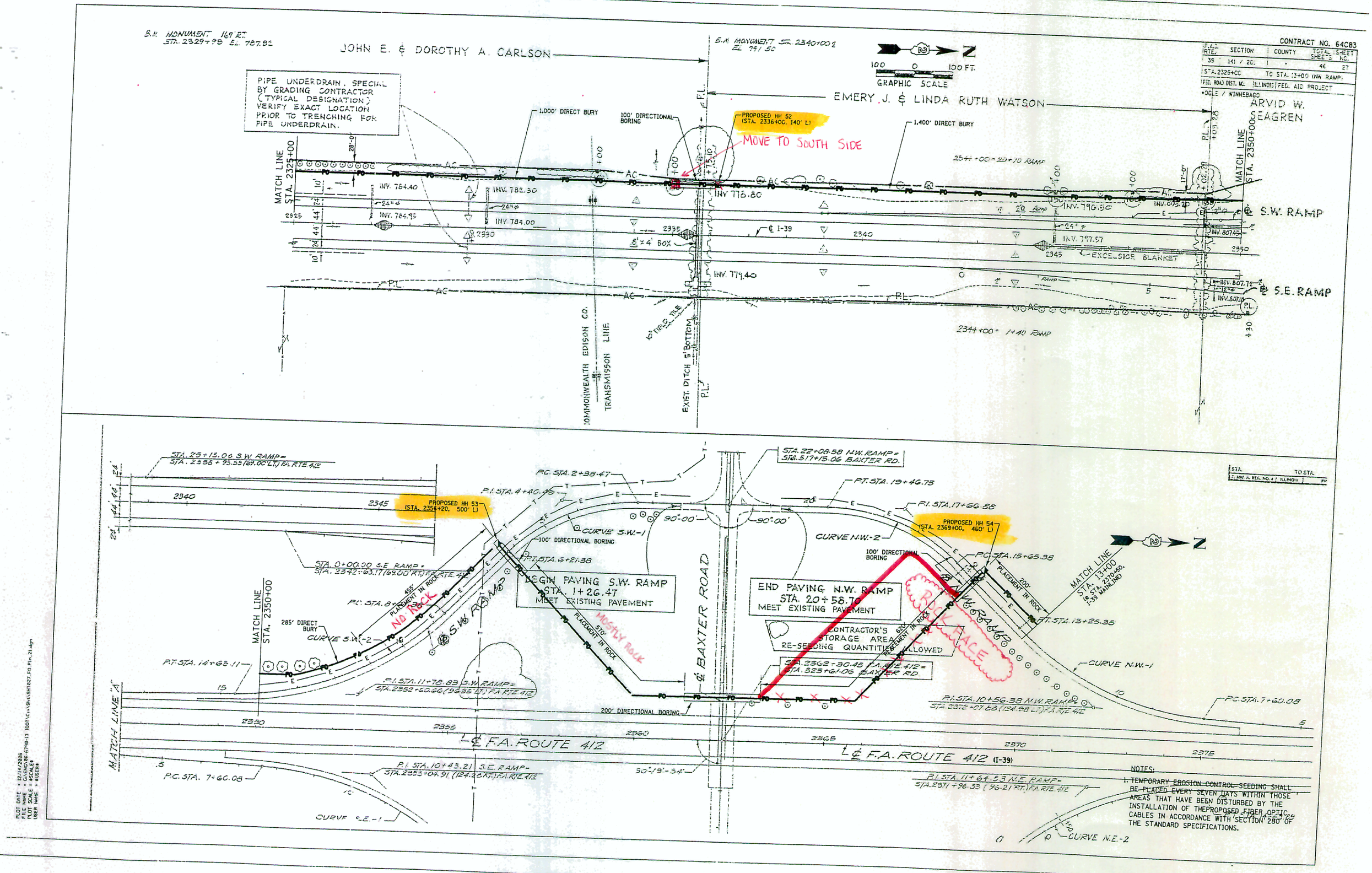

CONTRACT NO. 64C83
F.A.I. RTE. | SECTION | COUNTY | TOTAL SHEETS | SHEET NO.
39 | 141 / 20. | 1 | 46 | 27
STA. 2325+00 TO STA. 13+00 (NW RAMP)
FED. ROAD DIST. NO. | ILLINOIS | FED. AID PROJECT
DOLE / WINNEBAGO
JOHN E. & DOROTHY A. CARLSON
EMERY J. & LINDA RUTH WATSON
ARVID W. SEAGREN
GRAPHIC SCALE
100 0 100 FT.
PIPE UNDERDRAIN, SPECIAL BY GRADING CONTRACTOR (TYPICAL DESIGNATION) VERIFY EXACT LOCATION PRIOR TO TRENCHING FOR PIPE UNDERDRAIN.
1,000' DIRECT BURY
100' DIRECTIONAL BORING
PROPOSED HH 52 (STA. 2336+00, 140' L)
MOVE TO SOUTH SIDE
1,400' DIRECT BURY
MATCH LINE STA. 2325+00
MATCH LINE STA. 2350+00
INV. 784.40
INV. 782.30
INV. 784.95
INV. 784.00
INV. 778.80
INV. 779.40
INV. 796.50
INV. 797.57
INV. 807.45
INV. 807.72
INV. 807.18
8'x4' BOX
EXCELSIOR BLANKET
℄ I-39
℄ S.W. RAMP
℄ S.E. RAMP
2344+00 = 20+10 RAMP
2344+00 = 1+40 RAMP
COMMONWEALTH EDISON CO. TRANSMISSION LINE
EXIST. DITCH 5' BOTTOM
10" FIELD TILE
STA. 25+15.06 S.W. RAMP = STA. 2338+93.55 (69.00' LT.) F.A. RTE. 412
STA. 0+00.00 S.E. RAMP = STA. 2342+63.17 (69.00' RT.) F.A. RTE. 412
PROPOSED HH 53 (STA. 2356+20, 500' L)
P.C. STA. 2+38.47
P.I. STA. 4+40.49
CURVE S.W.-1
100' DIRECTIONAL BORING
P.T. STA. 6+21.38
BEGIN PAVING S.W. RAMP STA. 1+26.47 MEET EXISTING PAVEMENT
MOSTLY ROCK
PLACEMENT IN ROCK
STA. 22+08.58 N.W. RAMP = STA. 517+15.06 BAXTER RD.
P.T. STA. 19+46.73
P.I. STA. 17+66.88
PROPOSED HH 54 (STA. 2369+00, 460' L)
CURVE N.W.-2
P.C. STA. 15+65.38
END PAVING N.W. RAMP STA. 20+58.70 MEET EXISTING PAVEMENT
CONTRACTOR'S STORAGE AREA RE-SEEDING QUANTITIES ALLOWED
STA. 2362+30.45 F.A. RTE. 412 = STA. 323+61.06 BAXTER RD.
ROCK FACE
MATCH LINE STA. 13+00 (STA. 2370+50, I-39 MAINLINE)
P.T. STA. 13+25.38
CURVE N.W.-1
P.C. STA. 7+60.08
P.I. STA. 10+56.38 N.W. RAMP = STA. 2372+07.83 (124.98' LT.) F.A. RTE. 412
℄ BAXTER ROAD
℄ F.A. ROUTE 412
℄ F.A. ROUTE 412 (I-39)
MATCH LINE "A"
285' DIRECT BURY
CURVE S.W.-2
P.T. STA. 14+65.11
P.I. STA. 11+78.83 S.W. RAMP = STA. 2352+60.66 (96.35' LT.) F.A. RTE. 412
200' DIRECTIONAL BORING
P.I. STA. 10+43.21 S.E. RAMP = STA. 2353+04.91 (124.22' RT.) F.A. RTE. 412
P.C. STA. 7+60.08
CURVE S.E.-1
P.I. STA. 11+64.53 N.E. RAMP = STA. 2371+96.33 (96.21' RT.) F.A. RTE. 412
CURVE N.E.-2
NOTES:
1. TEMPORARY EROSION CONTROL SEEDING SHALL BE PLACED EVERY SEVEN DAYS WITHIN THOSE AREAS THAT HAVE BEEN DISTURBED BY THE INSTALLATION OF THE PROPOSED FIBER OPTIC CABLES IN ACCORDANCE WITH SECTION 280 OF THE STANDARD SPECIFICATIONS.

CONTRACT NO. 64C83

F.A.I. RTE.	SECTION	COUNTY	TOTAL SHEET S	SHEET NO.
35	141 / 201	*	46	26

STA. 13+00 INN RAMP, TO STA. 24+10-00

FED. ROAD DIST. NO. 1 ILLINOIS FED. AID PROJECT

*OGLE / WINNEBAGO

B.M. MONUMENT 236' LT STA. 2351+54 EL. 814.64

B.M. MONUMENT STA. 2362+00 ℄ EL. 829.02

B.M. MONUMENT CENTER CRASH WALL STA. 2362+20 EL. 854.53

B.M. MONUMENT STA. 2370+00 ℄ EL. 835.75

B.M. MONUMENT 186' LT STA. 2375+00 EL. 836.93

ARVID W. SEAGREN

MERRITT E. AND RUTH D. BAXTER

EDWIN P. & EDNA E. CARLSON

JOHN F. & DOROTHY A.

COMMONWEALTH EDISON CO. TRANSMISSION LINE

S.W. RAMP

N.W. RAMP

N.E. RAMP

S.E. RAMP

STA. 2382+30.45 F.A. 412 = STA. 325+61.06 BAXTER RD.

TREES TO BE SAVED

MATCH LINE STA. 13+00 STA. 2370+50 I-39 MAINLINE

MATCH LINE STA. 2380+00

MATCH LINE STA. 2410+00

90°-19'-34"

℄ I-39

INV. 809.50

INV. 815.00

INV. 847.00

INV. 852.50

INV. 844.00

INV. 851.55

INV. 830.06

INV. 826.00

52'-0"

1110' PLACEMENT IN ROCK

153.49'

52.76'

2576+00° 15-30 Ramp

NOTE: For Vitrified Clay (VC) Pipe or Corrugated Polyethelene (PE) Tubing shall not be used under the pavement as 4" pipe drain.

ASTM 4000 & AO Ramp

LANDLOCKED

C.E. CO. TOWER

C.E. CO. TRANSMISSION TOWER

TER

ROAD

COMMONWEALTH EDISON CO.

GENERAL TELEPHONE OF ILL.

GRAPHIC SCALE 100 0 100 FT.

EDWIN P. & EDNA E. CARLSON

5/8" IRON ROD BURIED 13"

R.R. SPIKE PUNCH MARK

WIRED WASHER

N. & W.

T.P.

P.P.

50' DIRECT BURY

241-19.85 N.E. RAMP

2388+73.93 F.A. 412 140+75.20 ROTARY RD.

ROCK

670' DIRECT BURY

100' DIRECTIONAL BORING

170' DIRECTIONAL BORING

DELETED UNDERDRAIN

STA. 2388+73.93 F.A. ROUTE 412 = STA. 140+75.20 ROTARY ROAD

STA. 2388+00 — 2389+85 184.0 L.F. PAVED DITCH (SPECIAL) (92.0 L.F. EACH SIDE)

PROPOSED MH 55 (STA. 2388+20, 115' L)

UNDERCUT 2387+50-2389+50

B.M. 24 ELEV. 822.303 7" SPIKE IN 6" WILD CHERRY STA. 2378+03 170' RT.

B.M. 23 ELEV. 834.014 7" SPIKE IN P. POLE, S. SIDE ROTARY RD. 225' LT. F.A. 412 STA. 2388+35

LOWELL A. BAXTER

P.B.M. #11 ELEV. 847.41 STAINLESS STEEL PLUG ℄ 2400+00 180' LEFT

P.B.M. #1 ELEV. 826.035 CHISELLED "O" IN CENTRE OF CRASH WALL 2388+67 ℄

MEDIAN CROSSOVER STA. 2398+40

FACE OF EXCAVATED ROCK (TYP.)

PROPOSED MH 56 (STA. 2406+75, 115' L)

2,010' PLACEMENT IN ROCK

℄ F.A. ROUTE 412 (I-39)

℄ N.E. RAMP

S.E.¼ SEC. 29, T. 43 N., R. 2 E.

N.E.¼ SEC. 29, T. 43 N., R. 2 E.

IRON ROD FLUSH

N.I.G. GAS (2")

ROTARY

JOHN F. & DOROTHY A. CARLSON

LOWELL A. BAXTER

PIPE UNDERDRAIN "6" SPECIAL
PIPE DRAIN "6" SPECIAL
(TYPICAL SYMBOLS) SEE SCHEDULE
AND SPECIAL DETAILS FOR PLACEMENT

STA. 2398+00 RT.
1 58' P CUL 1 RCCP 24"
INLET BOX (STD 2249)
INV. 818.44 at 30.1' RT.
1 PRC FLAR END SEC 24"
℄ 818.0 at 86.1' RT.
1 GRATING FOR CONC. FLAR END SEC. 24"
ROCK EXC. STRUCT. 37 CU. YDS.
TRENCH BACKFILL 6.5 CU. YDS.

STA. 2398+00 RT.
2 58' P CUL 1 RCCP 24"
INLET BOX (STD 2249)
INV. 818.44 at 30.1' RT.
1 PRC FLAR END SEC 24"
℄ 818.0 at 86.1' RT.
1 GRATING FOR CONC. FLAR END SEC
ROCK EXC. STRUCT. 37 CU. YDS.
TRENCH BACKFILL 6.5 CU. YDS.

RT. STA. 2387+00
1 GRATING FOR CONC. FLAR. END SEC. 24"

ROCK EXC. STRUCTURES
LT. 2390+70 6.0 CU.YD.

TEMPORARY EROSION CONTROL SEEDING SHALL BE PLACED EVERY SEVEN DAYS WITHIN THOSE AREAS THAT HAVE BEEN DISTURBED BY THE INSTALLATION OF THE PROPOSED FIBER OPTIC CABLES IN ACCORDANCE WITH SECTION 280 OF THE STANDARD SPECIFICATIONS.

P.B.M. 1A ELEV. 832.272 STEEL PLUG N.W. FRAPART ROTARY ROAD 134+96 50.6' LT

PLOT DATE = 12/14/2006
FILE NAME = G:\ENG\06-6790.13 100FT\Civil\Sht\SHT028_FO_Plan_22.dgn
PLOT SCALE = 50'/IN.
USER NAME = HYNES

CONDUIT WAS ATTACHED TO OUTSIDE OF PARAPET WALL.
REDESIGN DUE TO CONFLICT WITH RECONSTRUCTION PROJECT
GOING ON INSIDE BRIDGE AT SAME TIME.

CONTRACT NO. 64083

SECTION	COUNTY	TOTAL SHEETS	SHEET NO.
14, 7, 20,		48	28

STA. 2410+00 TO STA. 2465+00
FED. ROAD DIST. NO. HOLMGREN FED. AID PROJECT
BOONE & WINNEBAGO

U.S.G.S. DATUM
5TH GA (1929)

LOWELL A. BAXTER

B.M. 21 ELEV. 794.637
7" SPIKE IN 24" R. OAK (TOP S. BANK)
STA. 2414+70 95' RT.
B.M. 20 ELEV. 704.217
7" SPIKE IN 10" ASH (BOTTOM S. BANK)
75' RT. OF STA. 412

B.M. 18 ELEV. 812.024
7" SPIKE IN 11" W. OAK (TOP N. BANK)
STA. 2430+72 105' RT.
B.M. 19 ELEV. 705.010
7" SPIKE IN 30" R. OAK (BOTTOM N. BANK)
75' LT. OF STA. 2427+30

100 0 100 FT.
GRAPHIC SCALE

ELIDA LODGE No. 25
INDEPENDENT ORDER OF THE VIKINGS

FIRST NATIONAL BANK OF ROCKFORD, TRUSTEE

REMOVE & SALVAGE 94' P-CUL 15"
(Cost Incidental To Earth Exc.)

PROPOSED HH 57
(STA. 2418+50, 130' LT)

STA. 2425+00 F.A. ROUTE 412
STA. 10+00 RIVER BASELINE

SAVE TREES

MATCH LINE STA. 2410+00

PLACEMENT IN ROCK

SOUTHBOUND LANES

TREES TO BE REMOVED

DELETED

DRAIN

UNDERCUT & DRAIN

FACE OF EXCAVATED ROCK

℄ F.A. ROUTE 412 (I-39)

1230' ATTACHED INSIDE BRIDGE STRUCTURE (SEE DETAIL)

DID NOT DO

210' DIRECTIONAL BORING

SLICE

PROPOSED HH 58
(STA. 2418+50, 80' R)

BARRY M. WELLIVER

NORTHBOUND LANES

TREES TO REMAIN

PROPOSED HH 59
(STA. 2431+00, 80' R)

KISHWAUKEE GLEN SUBDIVISION
PART OF S.E.¼ SEC. 20-43-2

KISHWAUKEE GLEN DR.

CAVE DR.

FOREST DR.

PARK DR.

BLK. 5 BLK. 4 BLK. 2

CON. EDISON CO.
GEN. TEL. OF ILL.

148.05' L.
2434+06.48

149.22' L.
2437+91.15

SEC. 20, T43N, R2E, 3RD. P.M.

MOVED TO STA. 2436+50

UNDERCUT 2436+40 TO 2440+50 L

880' DIRECT BURY

MATCH LINE STA. 2440+00

ROCK FACE

STA. 2415+75 LT.
⚠1 62' P CUL I RCCP 24"
INLET BOX (STD. 2249)
INV. ~~807.18~~ at 27.5' LT. EL. 807.2
I PRC FLAR END SEC. 24"
R. ~~806.85~~ at 89.5' LT. EL. 807.0
I GRATING FOR CONC. FLAR END SEC. 24" R. 806.86
ROCK EXC. STRUCT. 58 CU. YDS. ~~2420.81.16~~
TRENCH BACKFILL 6.7 CU. YDS.

SECTION 201-1-2A

L. BAXTER

SECTION 201-1B GRADING LIMITS

ROCK EXCAVATION FOR STRUCTURES
RT. & LT. STA. 2431+50 15 CY.

GRATING FOR CONCRETE FLARED END SEC. 36"
RT. & LT. STA. 2418+00 2 Each
RT. STA. 2436+00 1 Each

JAMES M. WELDEN

EDWARD G. AND CAROL J. WELDEN

SECTION 201-2A

U.S. DATUM
GA(1929)

FIRST NATIONAL BANK OF ROCKFORD, TRUSTEE

SEC. 20, T43N, R2E, 3RD. P.M.

100 0 100 FT.
GRAPHIC SCALE

~~B.M. 17 ELEV. 831.40~~
~~7" SPIKE IN 9" W. OAK~~
~~STA. 2441+64 168' LT.~~

B.M. 16 ELEV. 836.480
7" SPIKE IN 10" TWIN W. CHERRY
STA. 2451+38 155' LT.

P.S.M. #12 ELEV. 852.12
STAINLESS STEEL PLUG
2450+00 150' LEFT

WASHERS WIRED TO FENCE POSTS.

JAMES M. WELDEN

TYPICAL SYMBOL EXCELSIOR BLANKET

PLACED FIBER IN FRONT OF WALL DUE TO TREES AND STEEPNESS HH 60 - 61

FIBER IN CONDUIT HH 59 - 60
IN FRONT OF ROCK FACE

SAVE ALL TREES

10 RAISED BERM

P.C. STA. 2464+79.06

NOISE WALL (STA. 2457+00 TO STA. 2467+50)

MATCH LINE STA. 2460+00

TREE REMOVE

SAVE TREES

B.M. 150 ELEV. 842.11
TOP R.O.W. MARKER
2450+00 150' LEFT

B.M. 150 ELEV. 844.81
TOP R.O.W. MARKER
2462+00 150' LEFT

RELOCATED H.H. #60

1000' DIRECT BURY

PROPOSED HH 60
(STA. 2459+00, 155' R)

1,500' DIRECT BURY

LAURA SHEPARDSON

WILBURN H & ANGELINE COMBS

LOT 1 LOT 2 LOT 3 LOT 4 LOT 5

SHEPARDSON'S SUBDIVISION
OF PART OF N.E.¼ SECTION 20-43-2

GERALD & ANN KUEHNE
EMMA B. WILCOXEN
ALVIN O. & JUANITA WORTHINGTON
WESLEY F. AND ELAYNE LUECK
LAURA SHEPARDSON

⚠1 STA. 2446+00 LT.
62' P CUL I RCCP 24"
I INLET BOX (STD. 2249)
29.5' LT. FL. ~~834.06~~, 91.5' LT. FL. ~~833.46~~ 833.17
I PRC FLAR END SEC. 24"
I GRATING FOR CONC. FLAR. END SEC. 24"
ROCK EXC. STRUCT.- 50 CU. YDS.
TRENCH BACKFILL- 6.1 CU. YDS.

ROCK EXCAVATION FOR STRUCTURES
RT. 2455+00 5.0 CU. YDS.

⚠2 STA. 2456+00 LT.
~~60~~ P CUL I RCCP 24"
I INLET BOX (STD. 2249)
29.5' LT. F. 844.46, 83.5' LT. F. 843.98
I PRC FLAR. END SEC. 24"
I GRATING FOR CONC. FLAR. END SEC. 24"
ROCK EXC. STRUCT. 50 CU. YDS.
TRENCH BACKFILL 6.5 CU. YDS.

NOTES:
1. TEMPORARY EROSION CONTROL SEEDING SHALL BE PLACED EVERY SEVEN DAYS WITHIN THOSE AREAS THAT HAVE BEEN DISTURBED BY THE INSTALLATION OF THE CONDUIT AND ELECTRICAL CABLES IN ACCORDANCE WITH SECTION 280 OF THE STANDARD SPECIFICATIONS.

LAURA SHEPARDSON

PLOT DATE = 12/14/2006
FILE NAME = D:\ENGVAR\STRUCTURE\23.dgn
PLOT SCALE = 1.0000
PLOT STYLE = MONOCHROME
USER NAME = KUEHN

PLACED FIBER IN FRONT OF WALL DUE TO TREES AND STEEPNESS.

MOVED HH #63 DUE TO END OF ROLL.

SPLICE

U.S.G.S. DATUM
5TH GA (1929)

FIRST NATIONAL BANK OF ROCKFORD, TRUSTEE

SEC. 20, T43 N, R2E, 3RD. P.M.

PATHFINDER ROAD

GRAPHIC SCALE 100 0 100 FT.

PATHFINDER ESTATES SUBDIVISION PART OF S.E.¼ SEC. 17-43-2

SAVE TREE

BLACKHAWK

STA. 130+80
EXISTING 3'x3' CONC. CULVERT. REMOVE HDWLS. AND FILL BARREL WITH SAND.
3 CU. YDS. CONC. REM.

MATCH LINE STA. 2465+00

JAMES M. WELDEN P.L.

NOISE WALL (STA.2460+00 TO STA.2467+19)

STA. 2468+11.84 ℄ F.A. ROUTE 412 ROUTE BLACKHAWK RD. 2472.98 TS 265.03 LT.

STA. 130+40.34 = 292.02' LT.

EXISTING WELL BUILDING REMOVAL NO. 1

2473+11.44 804.32 LT.

SAVE TREES

REMOVE INLET

84°-55'-39" SAN. TO CURVE

95°-32'-39" TAN. TO CURVE

P.C. STA. 2468+79.06

BUILDING REMOVAL NO. 2

1,180' DIRECT BURY

SEE SHEET No. 11 FOR STILLING BASIN DETAILS

STONE LINED DITCH (TYPICAL SYMBOL)

WAYNE R. & LOIS J. FOSSE

MALM

INGEGORD

260' DIRECT BURY

STA. 2468+07.92 ℄ F.A. ROUTE 412 = STA. 130+39.98 SECTION LINE

PROPOSED HH 61 (STA. 2467+60, 80' RT)

SHEPARDSON

100' BRIDGE ATTACHMENT (SEE DETAIL)

EXISTING 20'

NATURAL GAS CO. (4" MAIN) GEN. TEL. OF ILL.

COMED. CO.

P.K. NAIL STA. 2468+11.84

18" METAL PIPE WITH SAND SECTION IN BARREL

STA. 2468+07.92 CROSS CUT

SEE SHEET 46 FOR ADDITIONAL TIES TO ℄ BLACKHAWK ROAD

24" MAPLE
30" OAK
F. POST

2468+07.92
2468+11.84

PROPOSED MH 62 (STA. 2468+60, 80' RT)

ROCK EXCAVATION FOR STRUCTURES
RT. STA. 2489+00 EST. 14.0 C.Y.
RT. STA. 2499+00 EST. 47.0 C.Y.

TRENCH BACKFILL
RT. STA. 2489+00 4.7 C.Y.
RT. STA. 2499+00 7.9 C.Y.

P.B.M. #13 ELEV. = 855.65 STAINLESS STEEL PLUG 248'+00, 148' ℄

FRED G. & CONSTANCE M. CARLSON

SEC. 17, T43 N, R2E, 3RD. P.M.

P.B.M. #12 ELEV. 865.04 STAINLESS STEEL PLUG @ N.W. END POST OF S.E. BRIDGE OVER BLACKHAWK RD.

P.B.M. #11 ELEV. 844.67 Est. 71
7" SPIKE IN WOOD FENCE POST
STA. 2478+12 185' RT.

SPECIAL 2' BOTTOM DITCH @ 0.5 %

FL. 851.0

NOISE WALL (STA.2469+00 TO STA.2480+00)

STONE LINED DITCH

10' RAISED BERM

℄ F.A. ROUTE 412 (I-39)

TREE LINE

PINE TREES

GPS MONUMENT WIN 39-1A

STA. 2489+50 MEDIAN CROSSOVER AND SIDE ROAD CONNECTION. (SEE DETAILS SHEET 10

10' RAISED BERM

50' DIECTIONAL BORING

1000' PLACEMENT IN ROCK

No Rock Hit

42ND ST. EXTENSION

FRED G. AND CONSTANCE M. CARLSON

FRED G. & CONSTANCE M. CARLSON

MATCH LINE STA. 2490+00

CURVE DATA ℄ 42ND ST. EXTENSION

CONTRACT NO. 64C63

RTE.	SECTION	COUNTY	TOT. SHEETS	SHEET NO.
39	14, / 20		46	35

STA. 2465+00 TO STA. 2510+00

FED. ROAD DIST. NO. ILLINOIS FED. AID PROJECT

P.I. STA 2482+67.40
Δ = 50°-10'-37"
D = 1°-30'-00"
R = 3,819.69'
T = 1,788.34'
L = 3,345.10'
E = 397.91'
S.E. = 0.0525 %

S.E. ATTAINED FROM;
STA. 2462+79.06 TO 2465+79.06
N.B. 2497+24.16 TO 2500+24.16
S.B. 2496+74.16 TO 2501+24.16

1. STA. 129+64.5 35° SK
18" P CUL I RCCP 60"
LT. ℄ 850.9', RT. ℄ 831.6'
CLASS X CONC. 9.1 CU.YD. (STD. 1998)
SOLID YEL. PVT REM RCC (CP 7.3.1)
REINFORCEMENT BARS 525 LB.

2. STA. 129+01.5 53.6' LT.
1 MAN SPL 21 F CL (20% TURN)
INV. 830.5' TOP MASONRY 840.0

3. STA. 129+77.5, 57' LT.
INLET SPECIAL - TOP OF MASONARY 838.0
15" P CUL I RCCP 36" R.E.S.E. ℄ 831.6'
(CONNECT TO STRUCT. 2)

4. STA. 2469+76.5 42° 30' SK
648' P CUL ℄ RCCP 42"
18" P.C. ℄ 830.5 RT. ℄ 822.6'
CLASS X CONC. 15.7 CU.YD. STD. (1998)
REINFORCEMENT BARS 591 LB.

5. STA. 2487+00 LT.
MH TYPE A, 4' DIA. @ MED. INLET (STD. 2250)
GRATE EL. 850.00' INV. 844.10 @ 163.0 LT.
42' P CUL 2 RCCP 24"
1 PRC FLAR END SEC. 24"

STA. 126+64.5
DRAINAGE AREA 52.1 (ACRES)

U.S.G.S. DATUM
5TH GA (1929)

CURVE DATA ℄ F.A. 412
P.I. STA 2482+67.39
Δ = 50°-10'-37"
D = 1°-30'-00"
R = 3,819.69'
T = 1,788.34'
L = 3,345.10'
E = 397.91'
S.E. = 0.0525 %

S.E. ATTAINED FROM;
STA 2462+79.06 TO 2465+79.06
N. B. STA. 2497+24.16 TO 2500+24.16
S. B. STA 2496+74.16 TO 2501+24.16

B.M. 10 ELEV. = 853.649
7" SPIKE IN 10" WILD CHERRY
STA. 2491+85 105' LT.

GRAPHIC SCALE 100 0 100 FT.

FRED G. & CONSTANCE M. CARLSON

½" IRON ROD BURIED
52.85'
10" HICK.
30.10'
6" W. CH.
12" W. CHERRY
2498+66.00

TWIN 12" W. CHERRY
18" HICK.
3" HICKORY
CROSS CUT ON TOP 4" HIGH CONC. PILLAR
S.W. CORNER NW¼ SEC. 16-43-2

B.M. 15 ELEV. 375.270
7" SPIKE IN 3" W. CHERRY CLUSTER
STA. 2508+66 110' RT.

SEC. 17, T43 N, R2E, 3RD. P.M.

6" W. CHERRY
7" W. CHERRY
IRON ROD BURIED 14"
ELM STUMP
REINOLD L. JACKSLAND P.L.

B.M. 11 ELEV. 851.411
7" SPIKE IN 66" WALNUT
STA. 2509+15 130' LT.

REINOLD L. JACKSLAND

SEC. 16, T43 N, R2E, 3RD. P.M.

P.B.M. #14 ELEV. = 859.42
STAINLESS STEEL PLUG
STA. 2508+50; 194' L.

SECTION LINE

GPS MONUMENT WIN 39-1B

STA. 2499+00 RT.
74' P CUL I RCCP 24"
INLET BOX (STD 2244) 628.17
628.91 INV. ~~828.07~~ 21.5' RT. F.L. ~~828.10~~ 95.5' RT
1 PRC FLAR END SEC. 24"
1 GRATING FOR CONC. FLAR END SEC. 24"

STA. 2509+00 RT.
64' P CUL I RCCP 24"
INLET BOX (STD 2249) 818.07
819.5 INV. ~~815.37~~ 29.5' RT. F.L. ~~818.09~~ 93.5' RT.
1 PRC FLAR END SEC. 24"
1 GRATING FOR CONC. FLAR

PROPOSED MH 63 (STA. 2491+50, 140' RT)

SAVE TREES

ROCK WALL

℄ 42ND STREET EXTENSION

12' AUXILIARY LANE

℄ F.A. ROUTE 412 (I-39)

S.W. COR. N.W.¼ SEC. 16-43-2 4' HIGH CONC GATE PILLAR

2000' PLACEMENT IN ROCK

TREE LINE

FOR PROFILE OF 42ND ST. EXTENSION SEE SHEETS 46 & 47

FOR DETAILS OF CUL DE SAC SEE SHEET 10

REINOLD L. JACKSLAND

HARRY A. & SOPHIA BORMAN

IRON ROD BURIED 14"
126.46'
124.00'
10" W. CHERRY
14" W. CHERRY

NOTES:
1. TEMPORARY EROSION CONTROL SEEDING SHALL BE PLACED EVERY SEVEN DAYS WITHIN THOSE AREAS THAT HAVE BEEN DISTURBED BY THE INSTALLATION OF THE PROPOSED FIBER OPTIC CABLES IN ACCORDANCE WITH SECTION 280 OF THE STANDARD SPECIFICATIONS.

PLOT DATE = 12/14/2005
FILE NAME = G:\ENG\DGN\6-6790-13 (ROUTE)\6-6790-13 ROUTE BLACKHAWK RD. FD. Plan_24.dgn
PLOT SCALE = 1.0000 '/ INCH
USER NAME = ROBERTK

U.S.G.S. DATUM
5TH GA (1929)

RELOCATE HH #65
(EASIER TO ACCESS)

CONTRACT NO. 64C83

RTE.	SECTION	COUNTY	TOTAL SHEETS	SHEET NO.
39	141 / 201	*	45	31

STA. 2510+00 TO STA. 49+00 (RAMP DB)
FED. ROAD DIST. NO. ILLINOIS FED. AID PROJECT
* OGLE / WINNEBAGO

REINOLD L. JACKSLAND
F.L.

P.I. STA. 2523+67.95
Δ = 48° 03' 22"
D = 2° 00' 00"
R = 2,864.78'
T = 1,277.17'
L = 2,402.80'
E = 271.80'
S.E. = 0.060'
S.E. ATTAINED
N.B. STA. 2508+90.83 TO 2511+90.83
S.B. STA. 2507+90.83 TO 2512+40.83
N.B. STA. 2533+43.63 TO 2537+93.63
S.B. STA. 2533+93.63 TO 2536+93.63

HARRY A. & SOPHIA BORMAN

SEC. 16, T43N, R2E, 3RD. P.M.

~~7" SPIKE IN TWIN 26" MILD CHERRY STA. 2510+60 70 LT.~~

7" SPIKE IN 24" RED OAK STA. 2534+85 35 LT.

P.B.M. #15 ELEV. = 808.50
STAINLESS STEEL PLUG
STA. 2520+00; 170' L.

GRAPHIC SCALE 100 0 100 FT.

SEE SHEET FOR LAYOUT CONTROLS

R.O.W. LINE

STA. 2510+00

MATCH LINE STA. 2510+00

SAVE TREES

COM. EDISON CO. OIL

BADGER PIPE LINE CO. 12" PETROLEUM LINE (ABANDONED)

4" ELM
½" I. ROD 1" UP
5" HAW
4-20" W. CHERRY CLUMP

~~2520+06.88~~

STONE LINED DITCHES TO STABILIZE EMBANKMENT

510' DIRECT BURY

NATURAL GAS PIPE LINE COMPANY

PROPOSED HH 64
(STA. 2515+00, 130' RT)

710' DIRECT BURY

8" ELM
5" ELM
4" ELM
IRON ROD FLUSH

~~P.C. 2510+90.63~~

℄ F.A. ROUTE 412 (I-39)

12' AUXILIARY LANE

℄ RAMP DB

1,250' PLACEMENT IN ROCK

500' NO ROCK

SEC. 9, T43N, R2E, 3RD. P.M.

RAMP ABD

MATCH LINE STA. 2535+00

~~P.T. STA. 2534+63.63~~

10' RAISED BERM (REMOVED)

NOISE WALL

100' DIRECT BURY

RAY E. LINDEN

IRON ROD FLUSH
15" W. OAK
14" HICKORY
12" BL. OAK

~~P.T. 2534+93.63~~

S. LINE SEC. 16, T43N, R2E, 3RD. P.M.
N. LINE SEC. 16, T43N, R2E, 3RD. P.M.

△1 STA. 2511+00
219' 220' P CUL 2 RCCP 36"

△3 STA. 2522+00 LT.
114' P CUL 2 RCCP 24"
1 MH-TA, 4' DIA WITH MED INL 2250
GRATE ELEV. 806.08 2' LT. INV. 805.36 116' LT. EL. 805.80
1 PRC END SEC. 24"

△2 STA. 2516+84 ; 25°-45' SKEW
386' P CUL 7 RCCP 60"
211' LT. EL. 776.38 , 183' RT. EL. 772.00
1 RC PIPE TEE 60" x 24" x 6'
1 IMPROVED INLET - CLASS X CONC. 21.5 C.Y., REBARS 4000 LB.
1 STILLING BASIN - CLASS X CONC 38.5 C.Y. REBARS 4630 LB.

△4 STA. 2526+00 LT.
116' P CUL 2 RCCP 24"
1 MH-TA, 4' DIA WITH MED INL 2250
GRATE ELEV. ~~809.76~~ 806.76 2' LT. INV. 806.70 118' LT. EL. 805.80
1 PRC FLAR END SEC. 24"

~~STA. 2535+00 BEGIN SECTION 201-3-2A~~
~~STA. 2558+85.39 END SECTION 201-2A~~

END SECTION 201-2A
BEGIN SECTION 201-3-2A
STA. 2558+85.39
BY OTHERS

N.I. GAS CO. 2" MAIN

BRIDGE SECTION 201-3HB
N.B. F.A. ROUTE 412 OVER LINDEN ROAD

UNDERCUT @ LINDEN RD.
STA. 97-103
103+90-108+06

STA. 66+64.42 ℄ RAMP BD
STA. 104+45.57 LINDEN ROAD
BRIDGE SECTION 201-3HE-5
RAMP BD OVER LINDEN ROAD

STA. 48+24.97 ℄ RAMP DB
STA. 105-30.36 LINDEN ROAD
BRIDGE SECTION 201-3HB-4
RAMP DB OVER LINDEN ROAD

P.B.M. #6 ELEV. 840.22
STAINLESS STEEL PLUG @ N.W. ENDPOST RAMP BD / LINDEN RD.

P.B.M. #5
STAIN. 27
S.E. END RAMP DB

=STA. 100+00.00 LINDEN ROAD

℄ F.A. ROUTE 412 (I-39)

MATCH LINE STA. 2535+00

NOISE WALL

BY OTHERS

67°-26'-42"

30°-00'-00"

SAVE TREES

INV. 804.00

250' DIRECT BURY

PROPOSED HH 65
(STA. 2537+50, 140' RT)

2,085' DIRECT BURY

BRIDGE SEQ. 201-2HB-1
N.B. F.A. ROUTE 412
OVER RAMP BD

~~PAVED DITCH (SPECIAL)~~
RAMP "BD" BRIDGE SITE
~~RT. STA. 74+27 76+30 325 L.F.~~
~~LT. STA. 75+40 76+70 430 L.F.~~
~~DELETED CONTRACT #38804;~~
~~ADDED TO SECTION 201-(1,2,2B)~~
~~201-(1,2,2-B)56~~

RAMP 'BD'
STA. 67+45.42
RAMP 'DB'
STA. 47+46.97

℄ RAMP DB

SPECIAL GRADING

℄ RAMP BD

50" MAPLE
BK. NAIL FLUSH

24" MAPLE
P.K. NAIL FLUSH

~~104+43.57 LINDEN ROAD~~

29" HACKBERRY
P.K. NAIL FLUSH

~~105+30.65 LINDEN ROAD~~

6" HIGH
8" HICKORY
9" OAK
4" MAPLE
IRON ROD BURIED 1.5"

~~2540+36.14~~

RAY E. LINDEN

CROSS REFERENCE SHEET No.

RAMP ALIGNMENT	33 TO 34
DRAINAGE STRUCTURES	43
RIGHT OF WAY	58, 59
CONTOUR PLANS	50, 51
RAMP PROFILES	37 TO 42

NOTE: SEE SHEET 43 FOR DRAINAGE STRUCTURES △1 TO △11

140' DIRECTIONAL BORING

~~47+76.84~~

PROPOSED HH 66
(STA. 47+46, 20' R)

145' BRIDGE ATTACHMENT
(SEE DETAIL)

PROPOSED HH 67
(STA. 49+00, 20' R)

MATCH LINE
STA. 49+00

NOTES:

1. TEMPORARY EROSION CONTROL SEEDING SHALL BE PLACED EVERY SEVEN DAYS WITHIN THOSE AREAS THAT HAVE BEEN DISTURBED BY THE INSTALLATION OF THEPROPOSED FIBER OPTIC CABLES IN ACCORDANCE WITH SECTION 280 OF THE STANDARD SPECIFICATIONS.

DURING TESTING, IT WAS DISCOVERED THAT 2 OF THE 3 CABLES PLACED BETWEEN HH # 65 & 67 WERE DAMAGED. WE RAN 2 NEW CABLES BETWEEN ORIGINAL CABLES RAN AND NOISE WALL.

ELIMINATED BORE UNDER WALL. PLACED FIBER AROUND END TO HANDHOLE

PLOT DATE = 12/14/2005
FILE NAME = D:\ENG\JOBS 6700-13 1001\C4-1\SHT\1831_FO_Pln_25.dgn
PLOT SCALE = 1.0000 '/ IN.
USER NAME = rusenk

CONTRACT NO. 64083

F.A. RTE.	SECTION	COUNTY	TOTAL SHEETS	SHEET NO.
35	141 / 201	•	46	32

STA. 49+00 (RAMP DB) TO STA. 775+00 (U.S. 20)

FED. ROAD DIST. NO. ILLINOIS FED. AID PROJECT

COUNTY WINNEBAGO

STA. 723+17.40 (55.91' RT.) P.I. STA. 36+00.95 RAMP "AC" CURVE 1

STA. 724+78.43 (95.03' RT.) P.I. STA. 37+65.66 RAMP "AC" CURVE 2

℄ U.S. ROUTE 20 (I-39)

STA. 782+34.40 U.S. 20 STA. 51+80.45 RAMP "BD"

℄ RAMP AC

℄ RAMP BD

℄ RAMP DB

℄ F.A. ROUTE 412

STA. 2569+44.66 BEGIN APPR. SLAB

P.T. STA. 57+56.89 RAMP "AC"

P.C.C. STA. 364+15.16 RAMP "AC"

P.C.C. STA. 380+35.16 RAMP "AC"

P.C.C. STA. 351+05.76 RAMP "AC"

P.C.C. STA. 494+98.61 RAMP "AC"

P.O.C. STA. 483+41.04 RAMP "AC"

RAMP "AC" C.C. CURVE 5
STA. 2567+72.04 (429.93' RT.) F/L 412
STA. 723+71.99 (405.19' RT.) U.S. 20

STA. 2571+17.78 (69.49' RT.) P.I. STA. 51+30.99 RAMP "AC" CURVE 4

STA. 2561+34.89 END APPROACH SLAB

F.A. ROUTE 412
STA. 2559+57.89
STA. 100+00.00
LINDEN ROAD

STA. 56+65.62 RAMP "BD" STA. 104+45.57 LINDEN RD.

STA. 46+64.97 RAMP "DB" BEGIN APPR. SLAB

STA. 57+26.43

PROPOSED MH 67 (STA. 49+00, 20' RT)

LINDEN ROAD

MATCH LINE STA. 49+00

END CONSTRUCTION STA. 110+00.00

STA. 543+30.71 "BD" END APPR. SLAB

P.T. STA. 566+69.00 RAMP "BD"

NOISE WALL

P.C. STA. 44+18.92 RAMP "BD"

STA. 43+22.39 "BD" BEGIN APPROACH SLAB

33° 34' 05" TAN. TO CURVE

BEGIN RAMP "BD" STA. 42+58.92

P.I. STA. 46+79.76 (79.76' RT.) RAMP "DB" CURVE 2

P.T. STA. 66+34.24 RAMP "DB"

2,280' DIRECT BURY

IRON ROD BURIED 13"
N.&W. WIRED TO FENCE

"BD" P.I. 51+23.86

N.&W. IN SHOULDER WESTBOUND U.S. 20
½" IRON ROD 1" UP

782+34.40 U.S. 20

N.&W. IN SHOULDER EASTBOUND U.S. 20
IRON ROD FLUSH

"DB" P.I. 61+34.24

BEGIN AUXILIARY LANE 744+28.03 (56.00' RT.)
STA. 742+14.51 END RAMP "DB"

℄ RAMP BCD

MATCH LINE STA. 745+00

N

IRON ROD FLUSH
N.&W. IN SHOULDER WESTBOUND U.S. 20

END "DB" 742+14.51

BEGIN "BC" 35+34.95

CURVE	P.I. STA.	Δ	D	T	R	L	E	S.E.	S.E. ATTAINED FROM;
RAMP AC-1	36+00.95	14° 12' 17"	7° 30'	95.19	763.94	189.40	5.91	0.08½	35+05.76 TO 36+95.16
RAMP AC-2	37+65.66	16° 48' 00"	12° 00'	70.50	477.46	140.00	5.18	0.08½	
RAMP AC-3	—	209° 25' 15"	18° 00'	—	318.31	1163.45	—	0.08½	
RAMP AC-4	51+30.99	30° 59' 36"	12° 00'	132.38	477.46	258.28	18.01	0.08½	
RAMP BC-1	49+73.00	34° 42' 33"	7° 30'	238.74	763.94	462.79	36.44	0.08½	46+00.26 TO 47+98.26
RAMP BD-1	51+25.80	62° 30' 33"	4° 56'	704.88	1161.40	1267.08	197.17	0.08½	42+58.92 TO 46+98.92
RAMP DB-2	61+34.24	57° 21' 47"	5° 00'	624.89	1145.92	1147.26	160.27	0.08½	53+47.35 TO 55+87.35

									52+00.89 TO 53+58.89
									51+33.05 TO 53+25.05
									50+06.00 TO 58+46.00
									65+74.61 TO 68+14.61

RELOCATE HH# 67 SPLICE

END OF NOISE WALL MEETS END OF BRIDGE.
MOVED HH to NORTH. BORED UNDER WALL.
RAN FIBER IN FRONT DUE TO TREES AND CONFLICT WITH EXISTING F.O. AND OTHER UTILITIES.

(HH 67 to MULFORD RD)

J. Fred & William H. Vogt

STA. 753+00

Sta. 753+10
45° Type-1A-24"
R. 12' FL. 800.8
R. 58' FL. 800.6
Std. 1976-D-24"-2 Hdwls
Cl. X Conc. Hdwl. 2.0 Cu. Yds.
℄ Bars 70 Lbs.
Trench Backfill 3 Cu. Yds.
Jute Matting, Est 45 Sq. Yds.

C.I.E. & G. Co.

C.I.E. & G. Co.

18" TEL. CO.

18" TEL. CO.

Sta. 9+51
Std. 2051, D-35, Sx-45° 2Hdwls
Conc. Hdwl. 7.4 Cu. Yds., ℄ Bars 200 Lbs.

Division on Mulford
Sta. 9+00.50 To
Sta. 10+98.50

N

Ralph R. & Mildred G. Froehlich

Sta. 764+50 — ℄ Inlet Special Type 2
El. 791.79
Fl. 786.25
160' Type-2A-48"
L. 70' FL. 786.5
L. 2' FL. 786.3
R. 2' FL. 786.2
R. 71' FL. 785.0
Sta. 1996, D-48"-30° Skew-2 Hdwls
Cl. X Conc. Hdwl. 12.2 Cu. Yds. ℄ Bars 760 Lbs.
Class A Trench Backfill 6 Cu. Yds.

P.C. Sta. 759+22.29

Sta. 764+50
5' St. 20 Sq. Yds
Jute Matting

CURVE DATA:
Δ = 50° 41' 00"
D = 16° 06' 00"
T = 2713.50'
L = 5066.33'
R = 5729.65'
E = 610.04'
S = 0.01 ½

Full Superelevation
Sta. 759+72.29 To
Sta. 809+40.62

Raymond J. & Isidore Froehlich

Proposed Right of Way Line ℄ of Proposed Improvement

MATCH LINE STA. 745+00

NOISE WALL

120' DIRECTIONAL BORING

CONSTR. EARTH DITCH CHECK

Sta. 746+00
50° Type-1A-24"
R. 11' F.L. 805.4
R. 61' F.L. 805.5
Std. 1976, D-24"-2 Hdwls.
Cl. X Conc. Hdwl. 2Cu. Yds., ℄ Bars 70 Lbs.
Jute Matting: Est. 45 Sq. Yds.

420' DIRECT BURY

90° DIRECTIONAL BORE

290' DIRECT BURY

SET REBAR SURVEY MARKER

Sta. 10+65
Std. 2051, D-35" Sx-45° 2Hdwls
Cl. X Conc. Hdwl. 7.4 Cu. Yds., ℄ Bars 200 Lbs.

PROPOSED HH 68 (STA. 754+10, 100' RT)

Edwin J. Gustafson

WOVEN WIRE FENCE
See Sheet No. 5-A
For SCHEDULE

Contractor Shall Open Ditch to Secure Outlet For Culvert. To Be Included In The Contract Unit Price Per Cubic Yard For EARTH EXCAVATION.

℄ U.S. ROUTE 20 (I-39)

MATCH LINE STA. 775+00

Remove

2,120" DIRECT BURY

Sta. 771+00
46° Type-1A-24"
R. 12' FL. 785.1
R. 58' FL. 788.0
Std. 1976, D-24"-2 Hdwls
Cl. X Conc. Hdwl. 2.0 Cu. Yds., ℄ Bars 70 Lbs.
Trench Backfill 3 Cu. Yds.
Jute Matting:
Est. 45 Sq. Yds.

NOTES:
1. TEMPORARY EROSION CONTROL SEEDING SHALL BE PLACED EVERY SEVEN DAYS WITHIN THOSE AREAS THAT HAVE BEEN DISTURBED BY THE INSTALLATION OF THEPROPOSED FIBER OPTIC CABLES IN ACCORDANCE WITH SECTION 280 OF THE STANDARD SPECIFICATIONS.

Raymond J. & Isidore Froehlich

MULFORD RD.

PLOT DATE = 12/14/2005
FILE NAME = G:\ENGR\06\6748-13 (001)\Civil\SHTS\H1832_FD_Pln_26.dgn
PLOT SCALE = #SCALE#
USER NAME = #USER#

RELOCATE HH #70. BORED FROM HH to BRIDGE
DUE to STEEP SLOPE. DID SAME FOR
HH #71 ALSO. THESE AREAS HAVE 1:1 SLOPES
BEHIND GUARDRAIL.

CONTRACT NO. 64C83

F.A.I. RTE.	SECTION	COUNTY	TOTAL SHEETS	SHEET NO.
35	14 / 201		46	33
STA. 775+00	TO STA. 836+00			
FED. ROAD DIST. NO.	ILLINOIS FED. AID PROJECT			
*OGLE / WINNEBAGO				

B.M. NO. 63 4 Nails in W. Face of S. Anchor Post (RR. Tie)
110'± Rt. Sta. 761+30, El. 797.26

U.S.G.S. DATUM
5TH G.A. (1929)

N

Raymond J. & Zudora Froehlich

CURVE DATA:
PI= 786+35.79
Δ = 50°-41'-00"
D = 1°-00'-00"
T = 2713.50'
L = 5068.33'
R = 5729.65'
E = 610.04'
S = 0.01'/'

FULL SUPERELEVATION
Sta. 759+72.29 TO
Sta. 805+40.62

Sta. 794+93 - E
Inlet (Special Type -I)
El. 794.16
F.L. 791.7
48" Type-2A-24"
R. 2' F.L. 791.7
R. 50' F.L. 791.5

Sta. 794+93
76° C.M.P. -24"-T-2A
R. 5'8" F.L. 791.5
R. 120' F.L. 780.6
Sta. 1970, D-24"-1 Hdwl.
Cl. X Conc. Hdwl. 1 Cu. Yd., ℄ Bars 35 Lbs.
See Special Drawing Sheet No. 3

Section 4VB
Omission Station
795+46.91 To
797+09.82

B.M. NO. 64 4 Nails in S. Root 20" Oak
200' Lt. Sta. 797+30, El. 763.21

APPROACH SLABS
Standard 2136-1 Method II, Construct R.C. Caps On Pile Bents Back Of Abutments, See Detail Sheet No. 86
Reinforcement Bars ---------- 33,560 Lbs.
P.C.C. Pavement (16 1/2"-12"-16 1/2") --- 474 Sq. Yds
Class X Concrete ---------- 7.1 Cu. Yds.

Kenneth P. & Dorothy Armour

MATCH LINE STA. 806+00

PROPOSED HH 69
(STA. 780+00, 110' Rt)

CONSTR. EARTH DITCH CHECK

MATCH LINE STA. 775+00

Sta. 781+00
Est. 45 Sq. Yds.
Jute Matting

SET PERM. R.O.W. MARK

℄ U.S. ROUTE 20 (I-39)

500' DIRECT BURY

Sta. 781+00
45° Type-1A-24"
R. 15' F.L. 791.7
R. 58' F.L. 791.5
Std. 1975, D-24"-2 Hdwls.
Cl. X Conc. Hdwl 2 Cu. Yds., ℄ Bars 70 Lbs.
Trench Backfill 3 Cu. Yds.

Permanent B.M.
Sta. 775+00, 120' Rt.
See Sheet #31 For Detail

Denotes R.O.W. Markers

PROPOSED HH 70
(STA. 795+20, 55' Rt)

1,590' DIRECT BURY

Proposed Right of Way Lines
℄ of Proposed Improvement

Raymond J. & Zudora Froehlich

Sta. 789+64 - 45° R.H. Skew
31-1 Type-3A-42"
L. 160' F.L. 778.7
R. 132' F.L. 778.0
Std. 1982, D-42"-45° Skew-2 Hdwls.
Cl. X Conc. Hdwl. 2.6 Cu. Yds., ℄ Bars 730 Lbs.

3 NAILS 12" MAPLE
3 NAILS IN 8" W. CHERRY
3 NAILS 8" DBLS. W. CHERRY
I.P. (BURIED 18")
I.P. (BURIED 10")
FG & E.M. EK

Kenneth P. & Dorothy Armour

Parnell T. Parker

Remove By Others

Remove

Remove CONSTR. EARTH DITCH CHECK

PROPOSED HH 71
(STA. 797+35, 55' Rt)

890' DIRECT BURY

SPLICE

Parnell T. Parker

Sta. 805+00
74° Type-2A-24"
R. 5° F.L. 785.9
R. 85' F.L. 781.2
Std. 1976, D-24"-2 Hdwls.
Cl. X Conc. Hdwl. 2 Cu. Yds., ℄ Bars 70 Lbs.

Sta. 805+00
Est. 45 Sq. Yds.
Jute Matting

FG & E.M. EK

185' BRIDGE ATTACHMENT
(SEE DETAIL)

PAVED DITCH, 2'
Rt. Sta. 795+00 To Sta. 800+00 ------ 101 Lin. Ft.

WOVEN WIRE FENCE
See Sheet No. 5-A
For SCHEDULE

B.M. NO. 64A 3 Nails in N. Side of S. Twin Elms
300'± Rt. of Sta. 809+00, El. 782.02

U.S. DATUM
G.A. (1929)

Attain Normal Crown
Sta. 809+40.62 To
Sta. 810+40.62

CURVE DATA:
PI= 786+35.79
Δ = 90°-41'-00"
D = 1°-00'-00"
T = 2713.50'
L = 5068.33'
R = 5729.65'
E = 610.04'
S = 0.01'/'

MATCH LINE STA. 806+00

150' R.O.W.

Kenneth P. & Dorothy Armour

Parnell T. & Dorothy G. Parker

B.M. NO. 65 3 Nails in E. Side of Grey Back Hard Maple
150'± Lt. of Sta. 827+80, El. 780.27

JUTE MATTING
Pt. Sta. 808+00 To Sta. 810+00 ------ 335 Sq. Yds

Kenneth P. & Dorothy Armour

Sta. 813+20
46 Type-1A-24"
L. 11' F.L. 782.1
L. 59' F.L. 782.0
Std. 1975, D-24"-2 Hdwls.
Cl. X Conc. Hdwl. 2 Cu. Yds., ℄ Bars 70 Lbs.
Trench Backfill 3 Cu. Yds.
Jute Matting: Est. 45 Sq. Yds.

Sta. 6+93-24" P.C.
Std. 1976, D-24"-2 Hdwls.
Cl. X Conc. Hdwl. 2 Cu. Yds.
℄ Bars 70 Lbs.

Julius T. & Edith L. Anderson

Contractor Shall Secure Outlet For Ditch To Be Included In The Contract Unit Price Per Cubic Yard For EARTH EXCAVATION.

AREA FOR STOCK-PILING AGGREGATE (BY OTHERS)
725 CU. YDS.

320' DIRECTIONAL BORING

505' DIRECT BURY

Permanent B.M.
Sta. 808+00 120' Rt.
See Sheet #31 For Detail

Proposed Right of Way Lines
℄ of Proposed Improvement

WATER

Sta. 815+67.19 - Bypass
Sta. 10+00 - Perryville Rd.

Omission Station:
814+42.50 To 11+47.00

PROPOSED HH 72
(STA. 814+20, 130' Rt)

Sta. 819+00
46° Type-1A-24"
R. 15' F.L. 782.8
R. 58' F.L. 782.3
Std. 1975, D-24"-2 Hdwls.
Cl. X Conc. Hdwl. 1.8 Cu. Yds., ℄ Bars 70 Lbs.
Trench Backfill 3 Cu. Yds.
Jute Matting: Est. 45 Sq. Yds.

Julius T. & Edith L. Anderson

WOVEN WIRE FENCE
SEE SHEET NO 5-A
FOR SCHEDULE

Contractor Shall Secure Outlet For Ditch To Be Included In The Contract Unit Price Per Cubic Yard For EARTH EXCAVATION.

RELOCATE HH #74
BORE FROM HH to BRIDGE

APPROACH SLABS Std. 2138-1 Method II Construct R.C. Cap On Back Of Abutments. See Detail Sheet No. 88
Reinforcement Bars ---------- 35,850 Lbs.
P.C.C. Pavement (16 1/2"-12"-16 1/2") --- 637 Sq. Yds
Class X Concrete ---------- 12.6 Cu. Yds.

Henry W. Madigan

Section 4 VS1
Omission Station
831+05.3 To 833+85.01

PROPOSED HH 74
(STA. 834+60, 55' Rt)

PROPOSED HH 73
(STA. 831+75, 55' Rt)

℄ U.S. ROUTE 20 (I-39)

1,785' DIRECT BURY

Denotes R.O.W. Markers

JUTE MATTING
PERRYVILLE ROAD
North Bridge Cone (Slopes Over 3:1) ------ 2,746 Sq. Yds
South Bridge Cone (Slopes Over 3:1) ------ 2,584 Sq. Yds
MAIN LINE
L. & R. Sta. 828+24 To Sta. 832+15
(Slopes Over 3:1) ------ 3,412 Sq. Yds.
L. & R. Sta. 832+15 To Sta. 835+00
(Slopes Over 3:1) ------ 2,267 Sq. Yds.

285' BRIDGE ATTACHMENT
(SEE DETAIL)

145' DIRECT BURY

P.O.T. 833+40.93

MATCH LINE STA. 836+00

1. TEMPORARY EROSION CONTROL SEEDING SHALL BE PLACED EVERY SEVEN DAYS WITHIN THOSE AREAS THAT HAVE BEEN DISTURBED BY THE INSTALLATION OF THE PROPOSED FIBER OPTIC CABLES IN ACCORDANCE WITH SECTION 280 OF THE STANDARD SPECIFICATIONS.

RELOCATE HH # 73. PLACE CONDUIT IN TRENCH
FROM HH UP TO BRIDGE DUE TO TREES
AND 1:1 SLOPE BEHIND GUARDRAIL

PLOT DATE = 12/14/2006
FILE NAME = C:\Projects\6798-13 (001)\Civil\Sht\SH033 FO Pln_27.dgn
PLOT SCALE = 1.0000 '/ IN.
USER NAME = ericsm

CONTRACT NO. 64083

FED. ROAD DIST. NO.	SECTION	COUNTY	TOTAL SHEETS	SHEET NO.
38	141 / 201	•	46	34

STA. 836+00 TO STA. 948+00 (RAMP AD)

FED. ROAD DIST. NO. ILLINOIS FED. AID PROJECT

• OGLE / WINNEBAGO

END SECTION 4-1
STA. 848+00

BEGIN SECT. 5
STA. 848+00

PROJECT F-284(7)

U.S. ROUTE 20 (I-39)

MATCH LINE
STA. 836+00

MATCH LINE
STA. 885+00

MATCH LINE
RAMP "AD"
STA. 948+00

N

Sta. 844+50
24" R.C.T-IA

2,400' DIRECT BURY

℄ of Proposed Improvement

SIGN
STD. 2156-1

Sta. 854+05
Jute Mat Meander Ditch
For Quantities See Sheet 82

Channel Change:
Sta. 850+42 L. 353' FL. 739.4
Sta. 855+61 R. 218' FL. 734.5

Temporary Drainage Easement

ATTAIN SUPERELEVATION
Sta. 850+85.61 To
Sta. 861+85.61

CURVE DATA
Δ = 175°40'-00"
D = 0°-50'-00"
T = 1068.48'
L = 2120.00'
R = 6875.46'
E = 82.53'
S = 0.01'/'

FULL SUPERELEVATION
Sta. 861+85.61 To
Sta. 882+05.61

P.C. Sta. 861+35.61

GAS

525' DIRECT BURY

PROPOSED MH 75
(STA. 860+00, 105' R)

Sta. 856+73

Typical Section
of
Channel Sta. 856+73

Est. 4150 Cu. Yds.
CHANNEL EXCAVATION
Included in Quantities

Meelagar Creek

Remove

Temporary Drainage Easement

P.I. Sta. 856+28
R. 100'

Note: For Drainage Details
Sta. 848+00 To Sta. 853 + 85.56
See Sheet No. 30
For Quantities & Details of
Ramps "AC" "AD" "BC" "BD" "CA"
"CC" "DA" & "DB" See Sheet No. 29 Through No. 43

3 NAILS 16" ELDER

3 NAILS 34" OAK

3 NAILS 7" ELM

I.P. (BURIED 18")

I.P.

NOTES:

1. TEMPORARY EROSION CONTROL SEEDING SHALL BE PLACED EVERY SEVEN DAYS WITHIN THOSE AREAS THAT HAVE BEEN DISTURBED BY THE INSTALLATION OF THEPROPOSED FIBER OPTIC CABLES IN ACCORDANCE WITH SECTION 280 OF THE STANDARD SPECIFICATIONS.

PLOT DATE = 12/14/2006
FILE NAME = G:\ENG\Mc-6794-13 (ROUTE)\SHEETS\SHT834_FO_Plan_28.dgn
PEN TBL = ACAD.tbl
USER NAME = dgeer

CONTRACT NO. 64C82

F.A.I. RTE.	SECTION	COUNTY	TOTAL SHEETS	SHEET NO.
39	14 201	•	46	38

STA. 5+80 (RAMP AD) TO STA. 883+26 (I-39)

FED. ROAD DIST. NO. ILLINOIS | FED. AID PROJECT

•OGLE / WINNEBAGO

SCHEDULE OF QUANTITIES — INTERCHANGE

ITEM	UNIT	RAMP "BC"	RAMP "DA"	RAMP "DB"	RAMP "BD"	RAMP "DE"	RAMP "AC"	RAMP "AD"	RAMP "CE"	RAMP SYSTEM "BB"	RAMP SYSTEM "CB"	TOTAL
PORTLAND CEMENT CONCRETE PAVEMENT (10")	SQ. YDS	4720	13432	4740	3171	4951	2875	6095	3855			43839
PAVEMENT FABRIC	SQ. YDS	4729	13432	4740	3171	4951	2875	6095	3855			43848
SUB-BASE GRANULAR MATERIAL, TYPE "A"	TONS	1097	1144	1100	1488	1878	984	2290	1222			11152
GRAVEL OR CRUSHED STONE BASE COURSE, TYPE "A"	TONS					2140				610	376	3126
COVER COAT MIXTURE COMPLETE	TONS					408				190	592	
BITUMINOUS MATERIALS (PRIME COAT)	GALS.					1215				335	1447	
JUTE MATTING	SQ-YDS		664	580		385			1031			2660
ALTERNATE A												
STABILIZED SHOULDER (BAM)	SQ. YDS	3391	2147	3320	1858	1410	1627	4231	2104			20088
COVER COAT AGGREGATE	TONS	68	43	66	37	28	33	85	42			402
BITUMINOUS MATERIALS (COVER COAT) A-3	GALS.	1695	1073	1660	929	705	814	2116	1052			10044
ALTERNATE B												
STABILIZED SHOULDERS (BAM)	SQ. YDS	3391	2147	3320	1858	1410	1627	4231	2104			20088
ALTERNATE C												
STABILIZED SHOULDERS (PAM)	SQ. YDS	3391	2147	3320	1858	1410	1627	4231	2104			20088
COVER COAT AGGREGATE	TONS	68	43	66	37	28	33	85	42			402
BITUMINOUS MATERIALS (COVER COAT) A-3	GALS.	1695	1073	1660	929	705	814	2116	1052			10044

Joseph E. Carlson

3rd. National Bank of Rockford

EARTHWORK:
AREA NO. 4
EARTH EXCAVATION 37,285 CU. YDS.
EMBANKMENT 241 CU. YDS.
HAUL 36,245 CU. YDS. TO BY-PASS SW COR. NE 1/4 SE 1/4 SEC. 35-
HAUL 716 CU. YDS. TO RAMP "CA" 44+2
BALANCE 853+26 TO 875+00

MATCH LINE STA. 853+26

Northern Illinois Toll Hwy Right of Way

RELOCATE HH #78

1,580' DIRECT BURY

Samuel Larson

NEW R.O.W.

EARTHWORK:
AREA NO. 1
EARTH EXCAVATION 2,545 CU.YD
EMBANKMENT S CU.YD
HAUL 12,532 C S. TO BY-PASS
BALANCE 675 TO 873+44

PROPOSED HH (STA. 16+00, R)

915' DIRECT BURY

PROPOSED HH 77 (STA. 3490, 90' R) (RAMP DB)

First Illinois Spiritualist Camp

150' DIRECTIONAL BORING

PROPOSED HH 76 (STA. 30+00, 60' R) (RAMP AD)

2,030' DIRECT BURY

MATCH LINE STA. 865+00

MATCH LINE STA. 9+80

EARTHWORK:
AREA NO. 3
EARTH EXCAVATION 3196 CU. YDS.
EMBANKMENT 1785 CU. YDS.
HAUL 787 CU. YDS. TO RAMP "BD"

EARTHWORK:
AREA NO. 2
EARTH EXCAVATION 63,088 CU.YDS.
EMBANKMENT 2 CU.YDS.
HAUL 34,154 CU. YDS. TO RAMP "CA"
HAUL 28,933 CU. YDS. TO BY-PASS
BALANCE 875+44 TO 860+00

RELOCATE HH #75 *

SPLICE

* STOPPED JOB HERE OCT. 2007.
WILL PLACE REMAINDER OF FIBER WHEN NEW R.O.W. IS SECURED FOR I-90 RECONSTRUCTION PROJECT.

FOR RAMP EARTHWORK SEE RAMP PROFILE SHEETS.
FOR ALL OTHER EARTHWORK SEE PLAN AND PROFILE SHEETS.

NOTE: CONTRACTOR SHALL CONSTRUCT AREA 1 THRU 4 TO FACILITATE DRAINAGE.

NOTES:
1. TEMPORARY EROSION CONTROL SEEDING SHALL BE PLACED EVERY SEVEN DAYS WITHIN THOSE AREAS THAT HAVE BEEN DISTURBED BY THE INSTALLATION OF THEPROPOSED FIBER OPTIC CABLES IN ACCORDANCE WITH SECTION 280 OF THE STANDARD SPECIFICATIONS.

LEGEND
NON-PARTICIPATING

ILLINOIS DIVISION OF HIGHWAYS
ROCKFORD BYPASS
F. A. ROUTE 194
PROJECT _____ SECTION 5
WINNEBAGO COUNTY
INTERCHANGE QUANTITIES AND R.O.W.

Designed by: | Drawn By: | Checked By:

PLOT DATE = 12/14/2005
FILE NAME = c:\projects\06-67981\1 1001\dwg\sht\1805_FQ_Pln_25.dgn
COLOR TABLE = 65C64.tbl
USER NAME = kuscha

CONTRACT NO. 64C83

F.A.I. RTE.	SECTION	COUNTY	TOTAL SHEETS	SHEET NO.
39	141 / 201	*	46	36

STA. 893+26 (I-39) TO STA. 114+60 (I-90)

FED. ROAD DIST. NO. ILLINOIS FED. AID PROJECT

*OGLE / WINNEBAGO

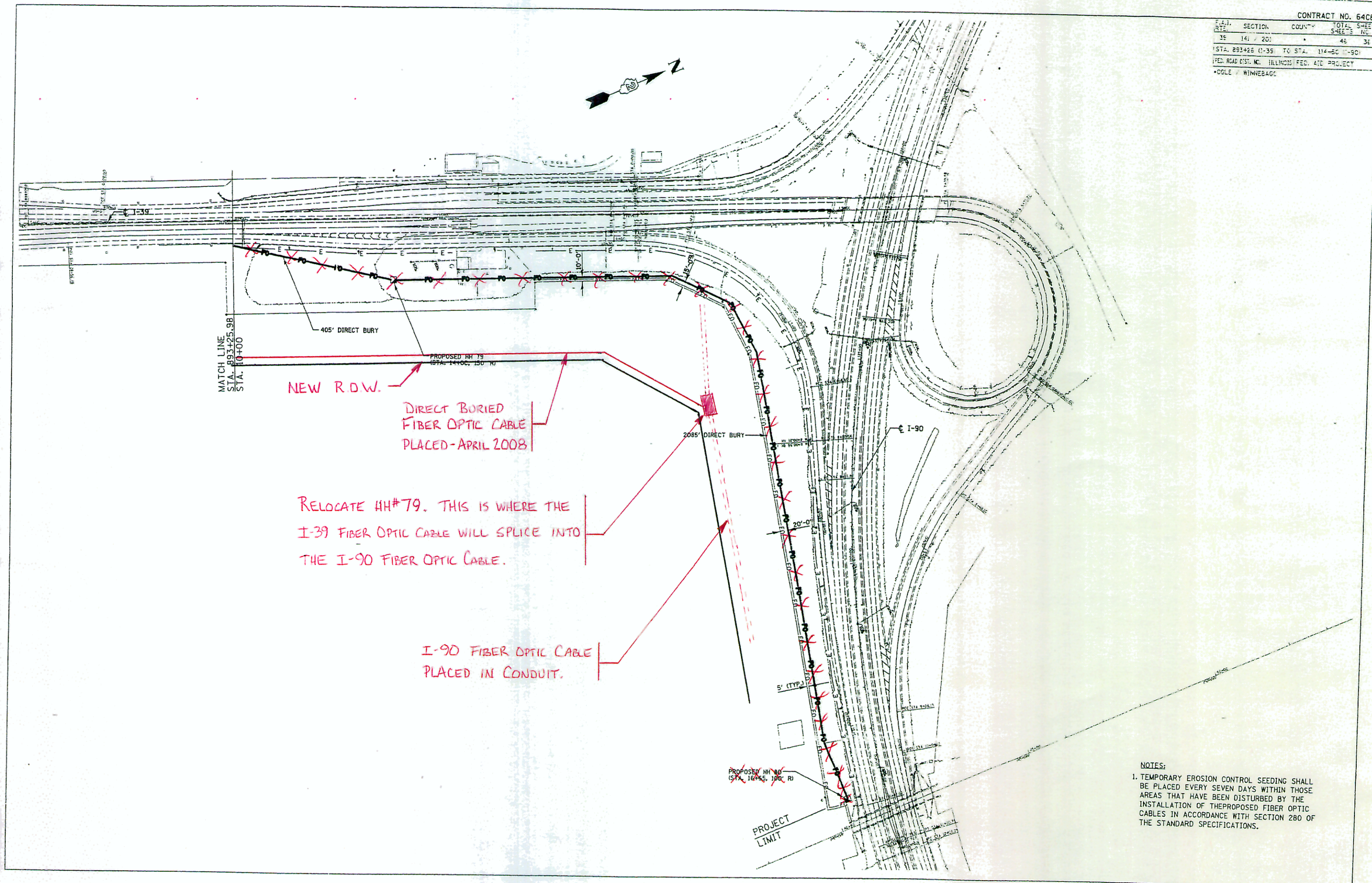

NOTES:

1. TEMPORARY EROSION CONTROL SEEDING SHALL BE PLACED EVERY SEVEN DAYS WITHIN THOSE AREAS THAT HAVE BEEN DISTURBED BY THE INSTALLATION OF THEPROPOSED FIBER OPTIC CABLES IN ACCORDANCE WITH SECTION 280 OF THE STANDARD SPECIFICATIONS.

PLOT DATE = 12/14/2006
FILE NAME = G:\ENG\06-6790-13 IDOT\Civ\Sht\SHT036_FD_70_EX.dgn
PLOT SCALE = $SCALE$
USER NAME = $USER$

CONTRACT NO. 64C83

F.A.I. RTE.	SECTION	COUNTY	TOTAL SHEETS	SHEET NO.
39	14(/ 20(	*	46	37
STA.	TO STA.			
FED. ROAD DIST. NO.	ILLINOIS FED. AID PROJECT			

*OGLE / WINNEBAGO

TYPICAL PRIMARY STATE HIGHWAY TOLLWAY OR RAMP

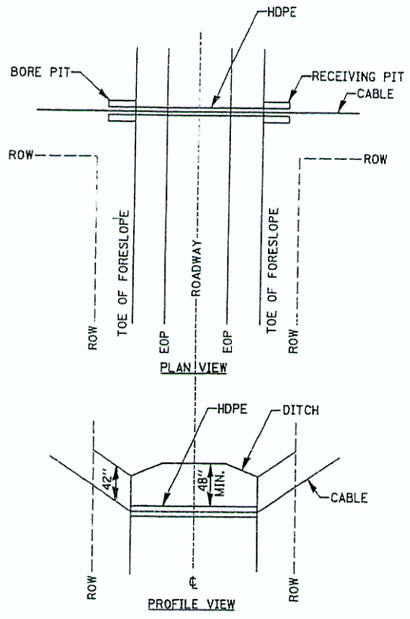

1. HDPE CONDUITS SHALL EXTEND FROM TOE OF SLOPE TO TOE OF SLOPE
2. BORE AND RECEIVING PITS SHALL BE AT A DISTANCE OF TEN FEET PLUS THE DEPTH OF THE PIT WITHOUT SHORING ON CONVENTIONAL HIGHWAYS, IF SHORING IS USED , THE PIT SHALL BE LOCATED A MINIMUM OF TEN FEET FROM THE EDGE OF THE TRAVELED WAY (PAVED SHOULDER) PAVEMENT.
3. CONDUITS MUST BE A MINIMUM OF 42" BELOW THE DESIGNED DITCH GRADES.
4. ENDS OF ALL CONDUITS MUST BE FOAM PLUGGED. (ARNCO HYDRA-SEAL S-60 OR AUTHORITY APPROVED EQUAL)
5. ALL OPERATIONS MUST MEET REGULATING AGENCY REQUIREMENTS.

TYPICAL PRIMARY STATE HIGHWAY OR TOLLWAY

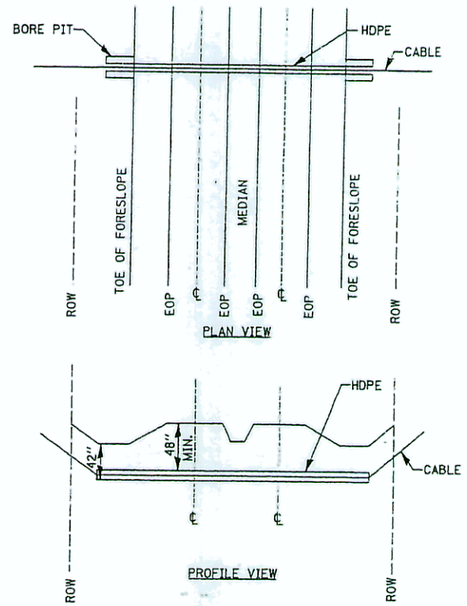

1. HDPE CONDUITS SHALL EXTEND FROM TOE OF BACKSLOPE TO TOE OF BACKSLOPE UNLESS OTHERWISE APPROVED.
2. BORE AND RECEIVING PITS SHALL BE A MINIMUM OF 30 FEET FROM THE EDGE OF PAVEMENT ON FULLY ACCESS-CONTROLLED HIGHWAYS UNLESS OTHERWISE APPROVED.
3. CONDUITS MUST BE A MINIMUM OF 42" BELOW THE DESIGNED DITCH GRADES ON EACH SIDE OF HIGHWAY.
4. ENDS OF ALL CONDUITS MUST BE FOAM PLUGGED. (ARNCO HYDRA-SEAL S-60 OR IDOT APPROVED EQUAL)
5. ALL OPERATIONS MUST MEET REGULATING AGENCY REQUIREMENTS.
6. PITS FOR BORING ARE NOT PERMITTED IN THE HIGHWAY MEDIAN.

TYPICAL ROAD CROSSING

TYPICAL BORE OR JACK

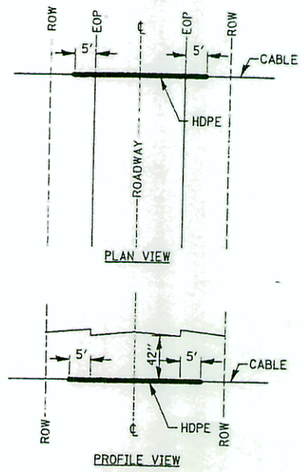

1. CONDUITS MUST EXTEND 5FT. EACH SIDE OF EOP / BACK OF CURB
2. BORE AND RECEIVING PITS SHALL NOT BE EXCAVATED WITHIN 5FT OF EOP / BACK OF CURB.
3. ENDS OF ALL CONDUITS MUST BE FOAM PLUGGED (ARNCO HYDRA-SEAL S-60 OR IDOT APPROVED EQUAL)
4. CONDUITS MUST BE A MINIMUM OF 42" BELOW E.O.P.
5. ALL OPERATIONS MUST MEET REGULATING AGENCY REQUIREMENTS.

TYPICAL BORES

DIRECT BURIED CABLE

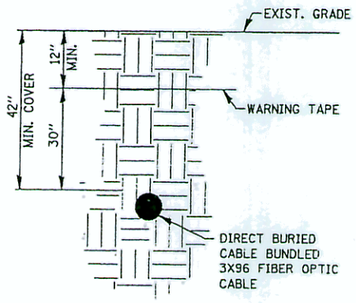

NOTES
1. PLACEMENT OF WARNING TAPE SHALL BE INCLUDED WITH INSTALLATION OF FIBER OPTIC CABLES AND CONDUITS AT NO ADDITIONAL COST

BORED CONDUIT WITH FIBER OPTIC CABLE AND MULTIPLE INNERDUCTS

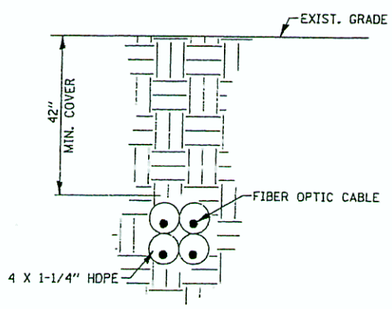

TYPES OF BURY
CABLE AND INNERDUCT

LOCATION OF CROSSING UTILITIES FOR REFERENCE ONLY. PLEASE CALL ALL APPLICABLE UTILITY LOCATORS FOR EXACT LOCATION PRIOR TO DIGGING OR TRENCHING.

PLOT DATE = 12/14/2006
FILE NAME = c:\projects\ge-6798-13 (DOT)\c+\Sht\SH1837_Details_01.dgn
PLOT SCALE = 100.0000
USER NAME = USER#

CONTRACT NO. 64C83

FAP RTE.	SECTION	COUNTY	TOTAL SHEETS	SHEET NO.
39	141 / 201	*	48	38
STA.	TO STA.			
FED. ROAD DIST. NO.	ILLINOIS FED. AID PROJECT			

*OGLE / WINNEBAGO

SURFACE ROCK

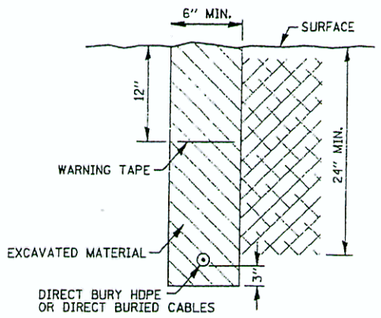

BELOW SURFACE ROCK

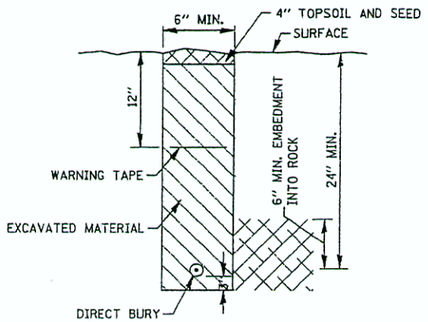

1. MINIMUM COVER REQUIREMENT IN ROCK IS 24" OF COVER FROM THE TOP OF THE CABLE OR DUCT.
2. COMPACT BACK FILL MATERIAL TO THE SATISFACATION OF THE ENGINEER.
3. NOTIFY IDOT IF BLASTING IS REQUIRED.
4. PLACEMENT OF WARNING TAPE SHALL BE INCLUDED WITH INSTALLATION OF FIBER OPTIC CABLES AND CONDUITS AT NO ADDITIONAL COST.

TYPICAL ROCK SAW PROFILE

FIG. 1

PLOWING WITH NO DISTURBANCE OF DRAINAGE DITCH BANKS

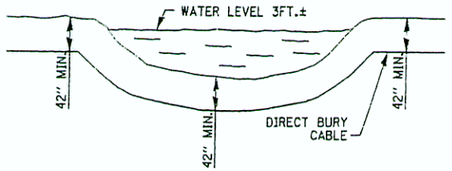

FIG. 2

REMOVE AND REPLACE BANKS IF NEEDED TO ALLOW PLOWING OF CABLE WITHOUT ADVERSE ANGLE CHANGE

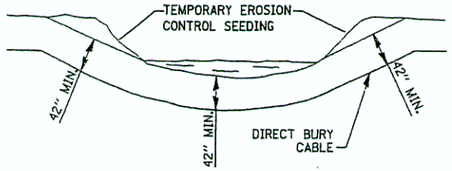

1. THE CONSTRUCTION OF THE CABLE MUST NOT RESULT IN ANY INCREASE IN EXISTING GROUND ELEVATIONS.
2. NORMAL CONSTRUCTION TECHNIQUE IS TO PLOW THE CABLE AT A MINIMUM DEPTH OF 42 INCHES.
3. TBON = FIBER OPTIC CABLE
4. BORE PITS SHALL NOT BE EXCAVATED CLOSER THEN 25 FEET FROM THE TOP OF THE DITCH BANKS.
5. CONDUITS MUST BE A MINIMUM OF 42" BELOW LOWEST POINT OF THE DRAINAGE DITCH.
6. CONDUIT ENDS MUST BE PLUGGED. (ARNCO HYDRA-SEAL S-60 OR IDOT APPROVED EQUAL)
7. ALL OPERATIONS MUST MEET REGULATING REQUIREMENTS.
8. RESTORATION SHALL CONFORM TO THE REQUIREMENTS OF GENERAL NOTE 11 OF THE "GENERAL CONSTRUCTION NOTES".
9. CONSTRUCTION SHALL NOT DISTURB OR RESTRICT STREAM OR DITCH FLOW AS PER IDNR PERMITS.

FIG. 3

SAME AS FIGURE #2 BUT DRAINAGE DITCH BANKS ARE MORE VERTICAL AND MAY REQUIRE TEMPORARY EROSION CONTROL SEEDING.

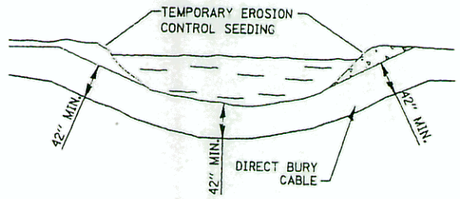

FIG. 4

TYPICAL DIRECTIONAL BORE

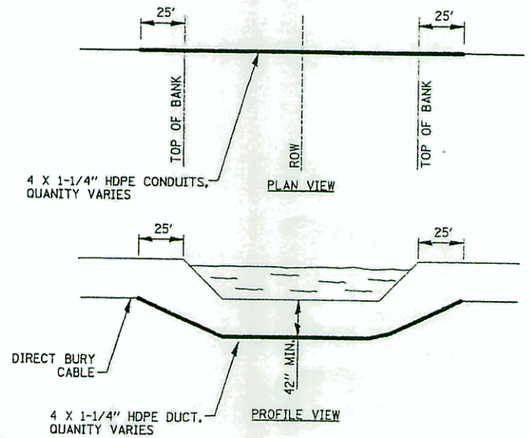

TYPICAL DRAINAGE DITCH CROSSING

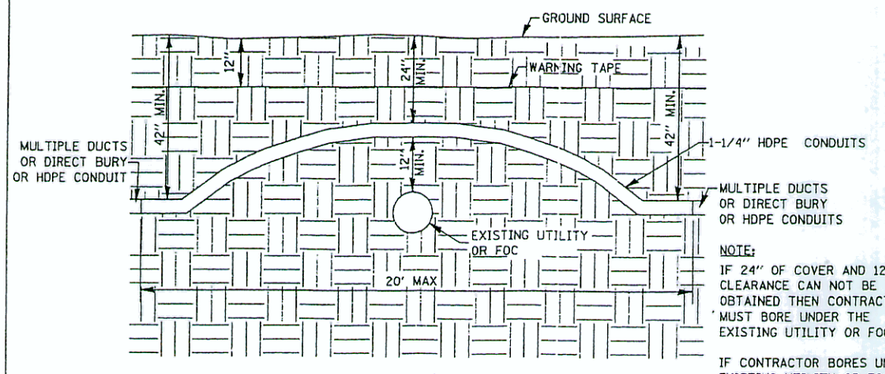

NOTE:
IF 24" OF COVER AND 12" CLEARANCE CAN NOT BE OBTAINED THEN CONTRACTOR MUST BORE UNDER THE EXISTING UTILITY OR FOC.

IF CONTRACTOR BORES UNDER EXISTING UTILITY OR FOC 48" MIN. SEPARATION MUST BE MAINTAINED. IF CROSSING WITH OPEN EXCAVATION 12" SEPARATION.

UTILITY AVOIDANCE DETAIL

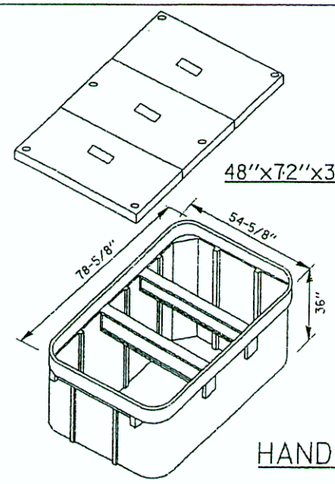

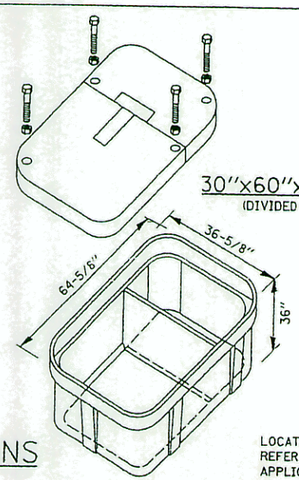

HANDHOLE SPECIFICATIONS

LOCATION OF CROSSING UTILITIES FOR REFERENCE ONLY, PLEASE CALL ALL APPLICABLE UTILITY LOCATORS FOR EXACT LOCATION PRIOR TO DIGGING OR TRENCHING.

PLOT DATE = 12/14/2005
FILE NAME = D:\ENG\98-6798-13 IDOT\Civil\Sht\SH1838.Detail.R2.dgn
PLOT SCALE = #SCALE#
USER NAME = #USER#

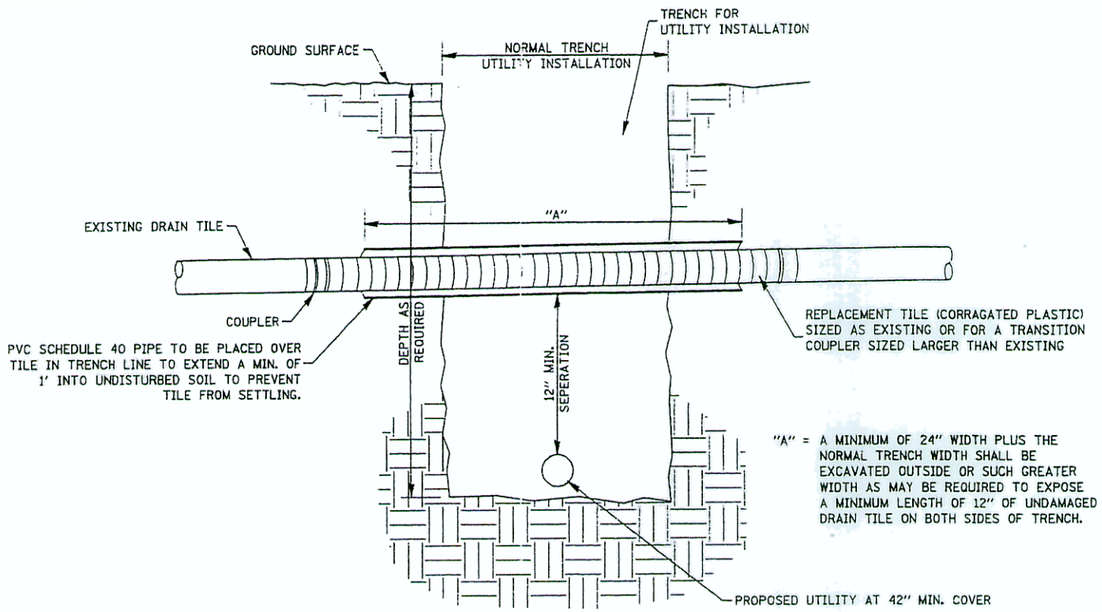

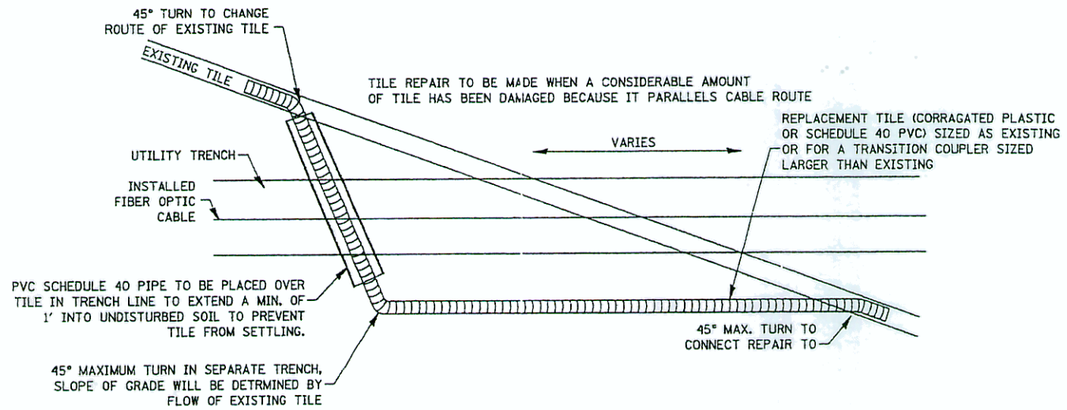

NOTES

CONTRACTOR SHALL LOG ALL BREAKS & SUBMIT TO IDOT.

REPLACEMENT OF DRAINAGE TILE SHALL BE ACCOMPLISHED SO AS TO CAUSE THE MINIMUM OF DISTURBANCE TO EXISTING FIELD TILE. THE REPAIRED DRAINAGE TILE SHALL BE LEFT IN A FUNCTIONAL CONDITION WITH SPECIAL EMPHASIS PLACED ON MAINTAINING EXISTING FLOW LINE ELEVATIONS.

REPAIRED WITH CORRAGATED PLASTIC DRAIN TILE SIZED TO MATCH THE EXISTING, USING A CONNECTING DEVICE OF A FERNCO PLAIN AND FLEXIBLE PIPE COUPLING OR EQUAL. SCHEDULE 40 PVC PIPE SHALL BE PLACED OVER REPAIRED TILE AND EXTEND A MIN. OF 1' INTO UNDISTURBED SOIL. (REPLACEMENT TILE CAN BE SIZED LARGER THAN EXISTING IF TRANSITION COUPLER IS USED FOR PROPER CONNECTION.)

WHEN REPAIRING TILE IN SOIL WITH A HIGH CONTENT OF SAND WHERE FILTER MATERIAL HAS BEEN PLACED OVER TILE TO PREVENT SAND FROM ENTERING TILE THE FILTER MATERIAL MUST BE REPLACED AS WELL OR WHERE TILE REPAIR IS MADE WITH PLASTIC TILE TO REPLACE CLAY TILE FOR A CONSIDERABLE DISTANCE. IN SANDY SOIL THE FILTER MATERIAL WILL BE PLACED TO PREVENT SAND FROM ENTERING TILE.

TILE LINES DISTURBED (WITHIN THE IDOT ROW) SHALL BE REPLACED AS FOLLOWS:

1. CONCRETE COLLAR TO BE PLACED AROUND JOINT WHERE EXISTING TILE LINE AND CORRUGATED ALUMINIZED METAL PIPE CONNECT.
2. MINIMUM LENGTH OF CORRUGATED METAL PIPE SHALL BE 4 FEET. MINIMUM LENGTH OF 2 FEET ON EACH SIDE OF TILE LINE BREAK LOCATION.
3. TRENCH SHALL BE BACKFILLED IN 8 INCHES LOOSE LIFTS, EACH COMPACTED TO THE SATISFACTION OF THE ENGINEER.
   A. BACKFILL AND COMPACT AREA AROUND DRAIN TILE TO BE COMPLETED BY HAND UNTIL NEW TILE IS COMPLETELY COVERED. REMAINDER OF THE TRENCH SHALL BE BACKFILLED BY ACCEPTABLE METHODS.
4. MAINTAIN DRAINAGE OF TILE DURING REROUTING.
5. THIS TYPE OF REPAIR SHALL BE LIMITED TO DRAIN TILES WITH DIAMETER OF LESS THAN 6". DRAIN TILES WITH A DIAMETER OF 6" AND LARGER SHOULD BE REPAIRED IN KIND.

DRAINAGE LINE REPAIR

PLOT DATE = 12/14/2005
FILE NAME = c:\projects\6790-13 1001\c\civil\sht839.dgn
PLOT SCALE = #SCALE#
USER NAME = #USER#

CONTRACT NO. 64C83

F.A.I. RTE.	SECTION	COUNTY	TOTAL SHEETS	SHEET NO.
39	141 / 201	*	46	39
STA.	TO STA.			
FED. ROAD DIST. NO.	ILLINOIS FED. AID PROJECT			

*OGLE / WINNEBAGO

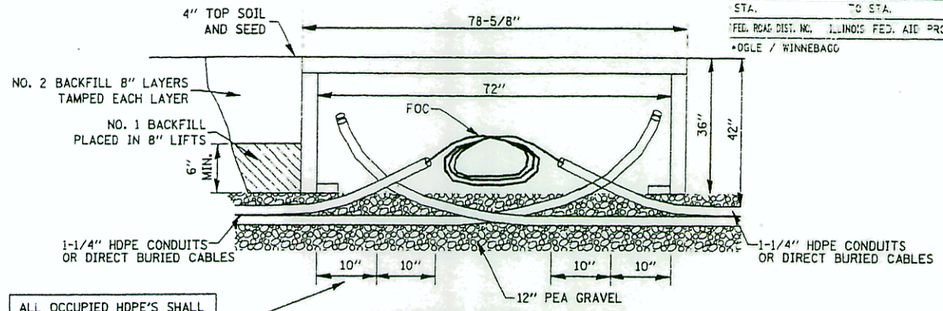

HANDHOLE INSTALLATION FOR PLACING 2 AND 3 DUCTS SECTION

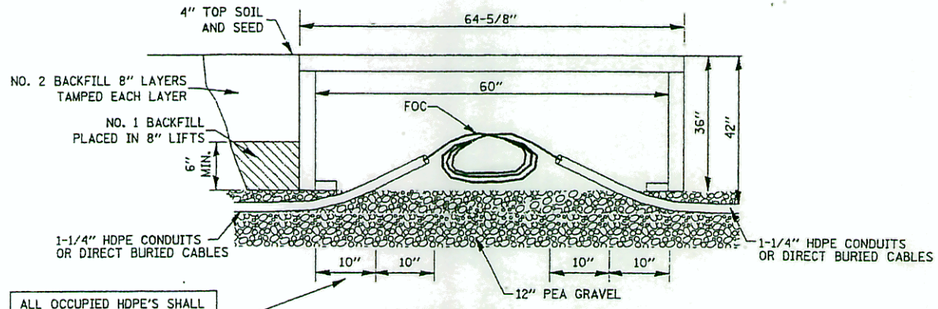

HANDHOLE INSTALLATION FOR DIRECT BURIED SECTION OR FOR PLACING 1 DUCT SECTION

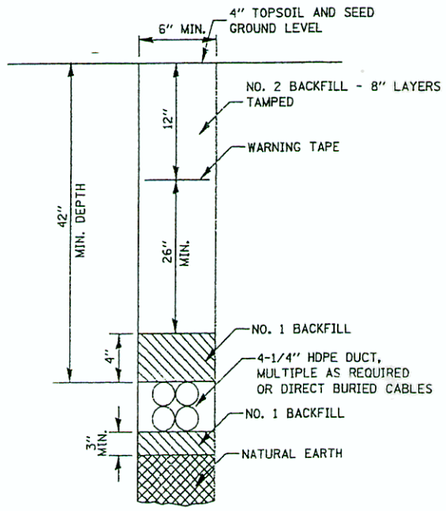

TRENCH IN SOIL

NOTES

1. NO. 2 BACKFILL WILL BE EARTH WHICH IS FREE FROM DEBRIS, CINDERS AND ROCKS MEASURING 2 INCHES, OR GREATER ACROSS THEIR LARGEST DIMENSION.
2. A WATERPROOF SEALING SIMPLEX DUCT PLUG WILL BE AROUND THE FIBER OPTIC CABLE TO SEAL THE OPENING IN THE CONDUIT. FOR CABLES 188 FIBER AND LARGER, USE ARNCO HYDRA-SEAL S-60 OR APPROVED EQUAL.
3. A WATER PROOF SEALING PLUG WILL BE INSTALLED IN ALL VACANT CONDUCTS.
4. A MINIMUM OF 6" OF No.1 BACKFILL SHALL COVER THE CONDUIT IN THE AREAS OF HANDHOLE EXCAVATION. THIS COVER WILL TRANSITION TO 4" AROUND TRENCHING EXCAVATION. MATERIAL AND COMPACTION SHALL BE TO THE SATISFACTION OF THE ENGINEER.
5. BACKFILL SHALL BE COMPACTED TO THE SATISFACTION OF THE ENGINEER.
6. NO.1 BACKFILL WILL BE CLEAN NATURAL SAND WHICH IS FREE OF DEBRIS AND HAS BEEN SIEVED THROUGH A NO. 16 SIEVE. PULVERIZED CLAY WILL NOT BE USED.
7. THE ENDS OF OCCUPIED CONDUITS SHALL BE SEALED WITH SPLIT CONDUIT PLUGS. THE ENDS OF EMPTY CONDUITS SHALL BE SEALED WITH CONDOIT PLUGS.

TRENCHING DETAIL AND HANDHOLE INSTALLATION

LOCATION OF CROSSING UTILITIES FOR REFERENCE ONLY, PLEASE CALL ALL APPLICABLE UTILITY LOCATORS FOR EXACT LOCATION PRIOR TO DIGGING OR TRENCHING.

NOTE: DAMAGE TO SOIL ANCHORS NOT INSTALLED W/ APPROVED DRIVER WILL BE THE RESPONSIBILITY OF CONTRACTOR FOR REPLACEMENT

INSTALLATION OF WARNING POST

1. USE THE SENTRY POST® DRIVER TO RAPIDLY INSTALL THE SENTRY POST® IN MOST SOIL CONDITIONS.
2. THE SOIL ANCHOR IS DRIVEN UNTIL FLUSH WITH GROUND LEVEL OR SLIGHTLY BELOW THE SURFACE.
3. PUSH THE SENTRY POST® DOWN INTO THE ANCHOR APPROXIMATELY 9", THEN PULL UP UNTIL IT LOCKS INTO PLACE.

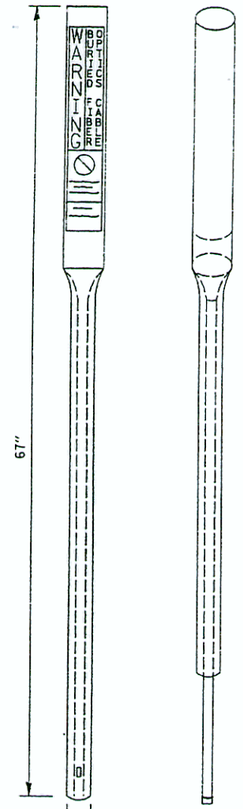

POST

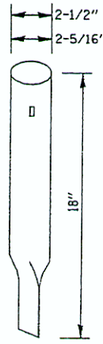

DRIVER

SOIL ANCHOR

HANDHOLE AND LOCATE MARKER LOCATION AND WARNING SIGN INSTALLATION PROCEDURE

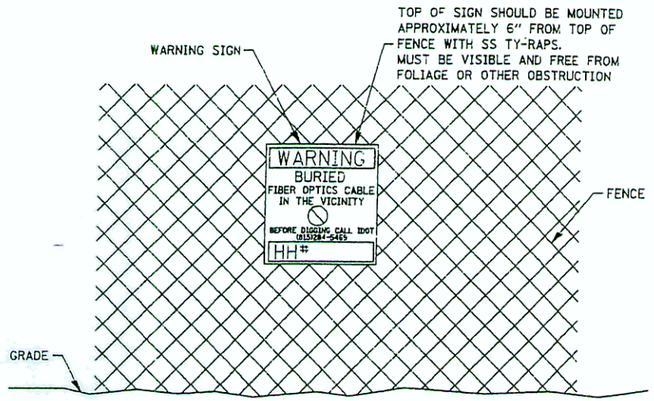

FENCE MOUNTED WARNING SIGN

NTS

NOTES

1. ROUTE MARKER TO BE PLACED 1 FOOT FROM HANDHOLE OR AT FENCE LINE IF POSSIBLE.
2. HANDHOLES SHALL BE BACKFILLED ONLY TO THE TOP OF THE BOX. FLUSH TO GROUND.
3. COIL FIBER CABLE IN HANDHOLE ENSURING THAT THE BEND RADIUS DOES NOT EXCEED VALUES IN TABLE "A".
4. INSTALL GROUND ROD & CAD-WELD AS PER MANUFACTURE'S INSTRUCTIONS. PLACE THE #6 GROUND WIRE (TYPE XHHW, STRANDED, GREEN INSULATED) THAT HAS BEEN ATTACHED TO THE GROUND ROD ON THE CENTER LUG OF THE WARNING SIGN. GROUND RODS AND GROUND WIRES INCLUDED IN THE COST OF HANDHOLE INSTALLATION.
5. BACKFILL MATERIAL SHALL BE COMPACTED TO THE SATISFACTION OF THE ENGINEER.
6. GROUND WIRE SHALL BE BONDED TO BOTH SHEATHS OF ARMORED FIBER OPTIC CABLE IN THE SPLICE ENCLOSURE USING #6 GROUND WIRE. EACH GROUND SHALL BE ISOLATED WITHIN THE ENCLOSURE.
7. INSTALL 1-1/4" HDPE CONDUIT FROM HANDHOLE TO WARNING SIGN TO ALLOW GROUNDING CABLE TO BE INSTALLED.
8. REFERENCE TYPICAL DRAWING FOR HANDHOLE INSTALLATION
9. PLACE 1-1/4" HDPE OVER FIBER OPTIC CABLE TO PROVIDE CRUSH PROTECTION, EXTEND HDPE 1' INSIDE HANDHOLE.
10. NO HANDHOLES WILL BE ALLOWED IN PAVED ROADWAYS OR SHOULDERS.
11. THE TOPS OF ALL HANDHOLES SHALL BE FLUSH WITH THE ADJACENT SLOPES.
12. A WARNING SIGN/LOCATE SIGN IS REQUIRED AT ALL HANDHOLES, AND IS INCLUDED IN COST OF HANDHOLE INSTALLATION.
13. FOR ALL SPLICE AND HANDHOLES, NUMBER DECALS WILL BE APPLIED AFTER INSTALLATION IS COMPLETED AND AT THE DIRECTION OF THE ENGINEER.

TABLE "A"

FIBER COUNT	MINIMUM BEND RADIUS (AT REST)
24F	6"
48F	6"
72F	8"
96F	8"
144F	10"
188F	10"
288F	10"
432F	10"
864F	11"

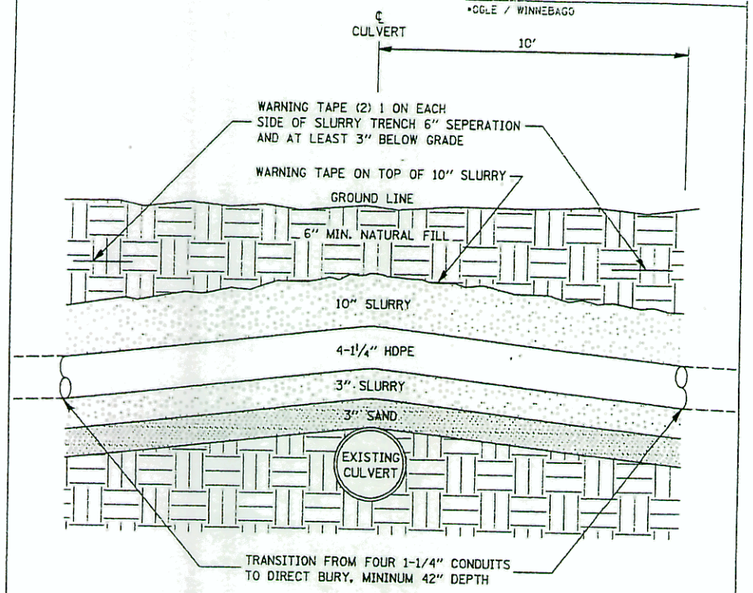

SIDE VIEW

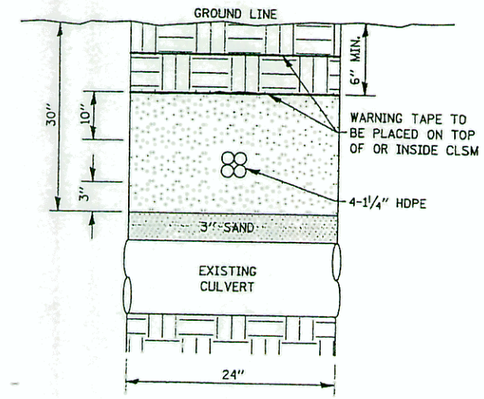

PROFILE VIEW

EXISTING CULVERT CROSSING

LOCATION OF CROSSING UTILITIES FOR REFERENCE ONLY, PLEASE CALL ALL APPLICABLE UTILITY LOCATORS FOR EXACT LOCATION PRIOR TO DIGGING OR TRENCHING.

PLOT DATE = 12/14/2006
FILE NAME = D:\ENG\QE-6790-13 IDOT\Cad\Sht\SH1840_Details R4.dgn
PLOT SCALE = #SCALE#
USER NAME = #USER#

CONTRACT NO. 64C83

F.A.I. RTE.	SECTION	COUNTY	TOTAL SHEETS	SHEET NO.
39	141 / 201	*	46	41
STA.		TO STA.		
FED. ROAD DIST. NO.	ILLINOIS	FED. AID PROJECT		

*OGLE / WINNEBAGO

TYPICAL FOR PARALLELING EXISTING FIBER

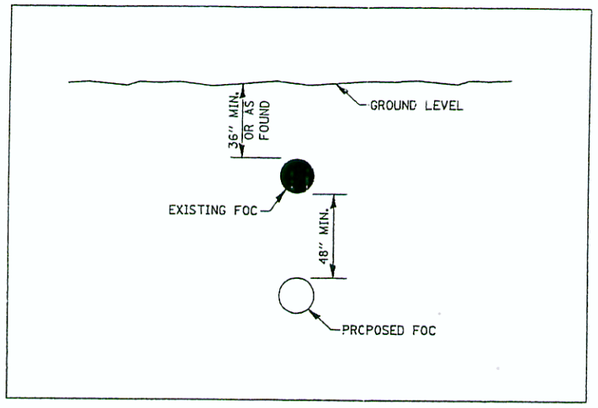

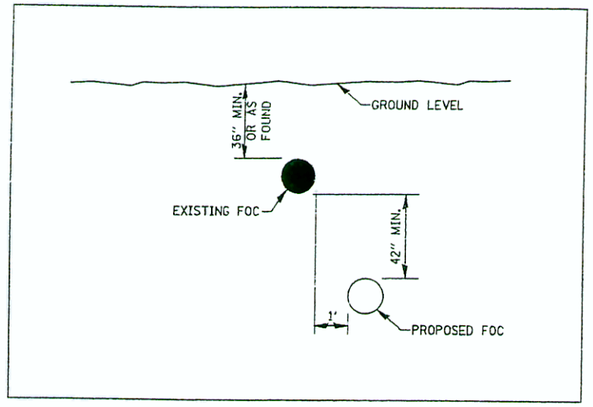

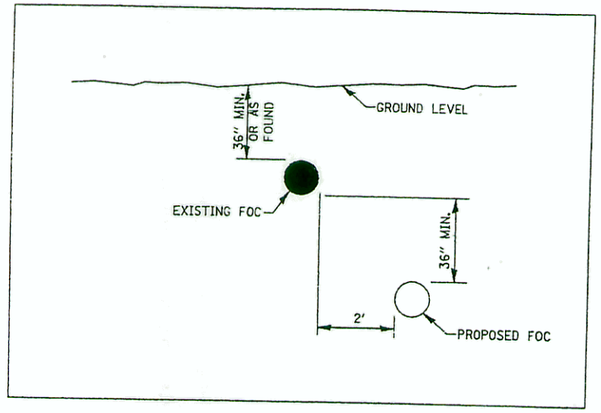

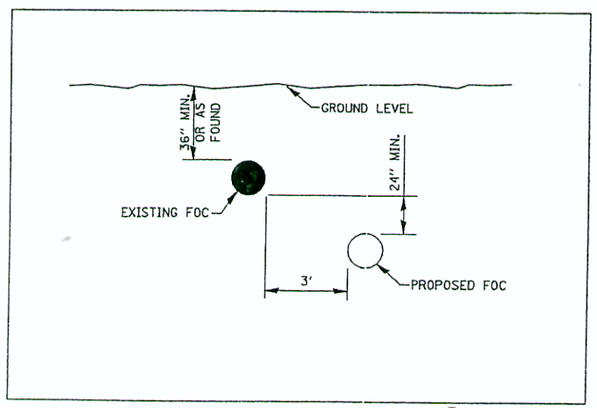

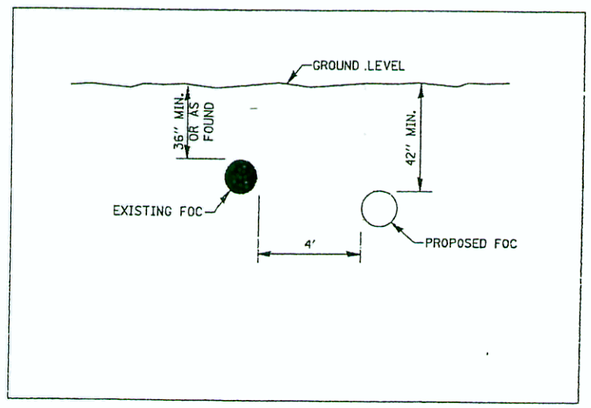

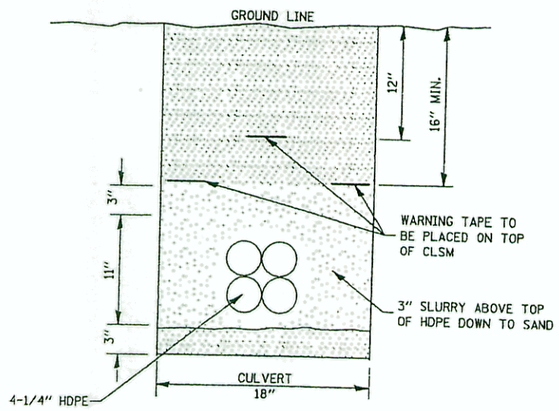

SIDE PROFILE VIEW

LOW COVER PROTECTION

LOCATION OF CROSSING UTILITIES FOR REFERENCE ONLY, PLEASE CALL ALL APPLICABLE UTILITY LOCATORS FOR EXACT LOCATION PRIOR TO DIGGING OR TRENCHING.

DETAILS

PLOT DATE = 12/14/2006
FILE NAME = G:\ENG\06-6798-13 IDOT\Civ\Sht\SHT041_Details_05.dgn
PLOT SCALE = $SCALE$
USER NAME = $USER$

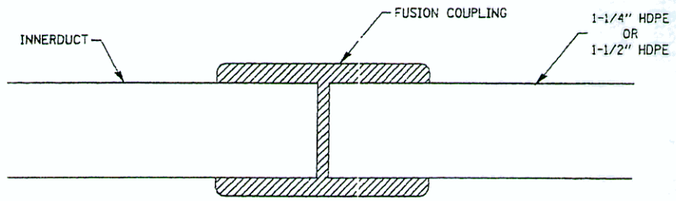

NOTE:
IN A PROPER ELECTROFUSION JOINT, MOLTEN MATERIAL FLOWS TO THE COLD ZONE WHERE IT SOLIDIFIES AND FREEZES OFF THE ESCAPE PATH. WITH THE MOLTEN MATERIAL CONTAINED, MELT PENETRATION WILL BUILD INTERFACE PRESSURE. WIRE WINDINGS WILL FLOW IN A DESIGNED AND CONTROLLED PATTERN AND A PROPER BONDING OF MATERIALS CAN BE OBTAINED.

PROPER FUSION DETAIL

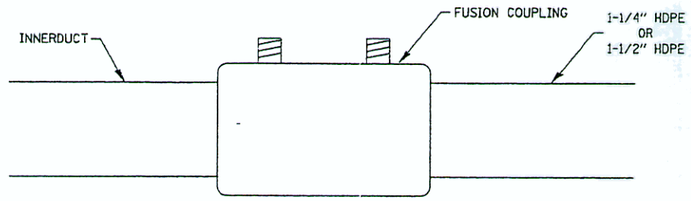

STANDARD JOINING PROCEDURES

1. THE PIPE MUST HAVE A SQUARE EVEN CUT.

2. REMOVE ANY BURRS OR SHAVINGS FROM THE PIPE ENDS THAT MAY HAVE DEVELOPED DURING THE CUTTING PROCESS.

3. CLEAN PIPE ENDS INSIDE AND OUT WITH A CLEAN CLOTH TO REMOVE ANY DIRT OR CONTAMINATES.

   PIPE PREPARATION AND CONTAMINATION ARE VERY IMPORTANT COSIDERATIONS IN THE ELECTROFUSION PROCESS. THEREFORE, CAREFULL ATTENTION SHOULD BE GIVEN TO PROPER SCRAPING AND CLEANING PROCEDURES.

4. SCRAPE PIPE ENDS TO REMOVE ANY OXIDATION OR SURFACE CONTAMINATION. FOR BEST RESULTS, SECURE TOOL ON PIPE AND MAKE TWO REVOLUTIONS.

5. REMOVE SCRAPING TOOLS AND CLEAN BLADE AREA WITH A CLEAN, DRY CLOTH. REPEAT THIS PROCEDURE SEVERAL TIMES DURING THE SCRAPING OPERATION TO REMOVE BUILD-UP OF MATERIAL.

6. CONTINUE SCRAPING UNTIL ONLY A VIRGIN SURFACE REMAINS.

   CAUTION: AVOID ALL POSSIBLE RECONTAMINATION OF THE PREPARED SURFACE. DO NOT TOUCH INSIDE OF FITTING OR SCRAPED PIPE SURFACES WITH YOUR HANDS AS PERSPIRATION AND BODY OILS COULD CONTAMINATE JOINTING AREAS AND AFFECT JOINT PERFORMANCE.

7. TO DETERMINE STAB DEPTH,MEASURE HALF THE LENGTH OF THE COUPLING AND MARK THE PIPE ENDS AN EQUIVALENT LENGTH. FOR EASE OF INSTALLATION, A STAB DEPTH INDICATOR AND INTERNAL FITTING STOPS ARE A MOLDED PART OF CENTRAL ELECTROFUSION COUPLINGS AND REDUCERS.

8. SLIDE FITTING ONTO PIPE UNTIL PIPE ENDS MEET WITH THE STOPS IN THE I.D. OF THE FITTING. CHECK MEASUREMENT MARK FOR PROPER STAB DEPTH.

9. MAINTAINING STAB DEPTH, PLACE INTO THE PROPER CLAMPING TOOL TO SECURE THE PIPE FROM MOVEMENT DURING THE FUSION CYCLE. FOR BEST RESULTS, ALIGNMENT CLAMPS SHOULD BE PLACED AS CLOSE TO THE FITTING AS POSSIBLE.

10. THE SEQUENCE PROCESSOR SHOULD BE CONNECTED TO AN ADEQUATE AC POWER SOURCE (110 VOLT).

    NOTE: IF UTILIZING A GENERATOR, THE GENERATOR SHOULD BE ENGAGED BEFORE PLUGGING THE SEQUENCE PROCESSOR IN.

11. THE SEQUENCE PROCESSOR WILL AUTOMATICALLY RUN A QUICK DIAGNOSTIC CHECK OF ITS OPERATIONAL FUNCTIONS (VOLTAGE INPUT/OUTPUT, ETC.) WHEN DIAGNOSTIC CHECK IS COMPLETE "ATTACH FITTING" WILL APPEAR ON THE VISUAL DISPLAY.

12. ATTACH LEADS FROM THE SEQUENCE PROCESSOR TO THE FITTING TERMINALS WHEN PROPER CONNECTION IS MADE, THE REQUIRED "FUSION CYCLE TIME" WILL APPEAR ON THE VISUAL DISPLAY.

13. PRESS START BUTTON TO BEGIN FUSION CYCLE. FUSION CYCLE TIME WILL COUNTDOWN ON THE VISUAL DISPLAY. PROPER VOLTAGE READ OUT SHOULD REMAIN BETWEEN 39.8 AND 40.2 VOLTS.

14. WHEN THE FUSION CYCLE IS COMPLETE, "FUSION COMPLETE AND RECOMMENDED COOLING TIME" WILL APPEAR ON THE VISUAL DISPLAY.

15. DISCONNECT LEADS FROM FITTING. CLAMPING DEVICE SHOULD REMAIN IN PLACE TO SECURE PIPE AND FITTING DURING THE RECOMMENDED COOLING TIME. AFTER REMOVING CLAMP, ADDITIONAL COOLING TIME SHOULD BE ALLOWED BEFORE SUBJECTING THE JOINT TO BENDING, BURYING, PRESSURE TESTING, OR SIMILAR HANDLING AND BACKFILL STRESS.

    NOTE: IN THE EVENT OF OUT-OF-ROUND PIPE, IT IS IMPORTANT TO ASSURE AN ADEQUATE AND EVEN SCRAPE IS ACHIEVED AROUND THE ENTIRE CIRCUMFERENCE OF THE PIPE. A RUBBER PIPE STOPPER CAN BE PLACED IN THE END OF THE PIPE TO AID IN ROUNDING THE AREA TO BE SCRAPED.

16. MULTIPLE DUCTS FUSION ARE TO BE STAGGERED AND AFTER COMPLETION TO BE BOUND TOGETHER WITH TY-STRAPS (AT 5' SPACING) SO TO OCCUPY MINIMUM POSSIBLE SPACE AND THEN BACKFILLED.

FUSION COUPLINGS DETAIL

PLOT DATE = 12/14/2006
FILE NAME = C:\IDOT\Civil\Sht\SH1042.Detail 06.dgn
PLOT SCALE = #SCALE#
USER NAME = #USER#

CONTRACT NO. 64083

F.A.I. RTE.	SECTION	COUNTY	TOTAL SHEETS	SHEET NO.
39	14 / 20	*	48	42
STA.	TO STA.			
FED. ROAD DIST. NO.	ILLINOIS FED. AID PROJECT			

*OGLE / WINNEBAGO

LOCATION OF CROSSING UTILITIES FOR REFERENCE ONLY, PLEASE CALL ALL APPLICABLE UTILITY LOCATORS FOR EXACT LOCATION PRIOR TO DIGGING OR TRENCHING.

CONTRACT NO. 64C83

F.A.I. RTE.	SECTION	COUNTY	TOTAL SHEETS	SHEET NO.
39	14(/ 20(	*	46	43
STA.	TO STA.			
FED. ROAD DIST. NO.	ILLINOIS	FED. AID PROJECT		

OGLE / WINNEBAGO

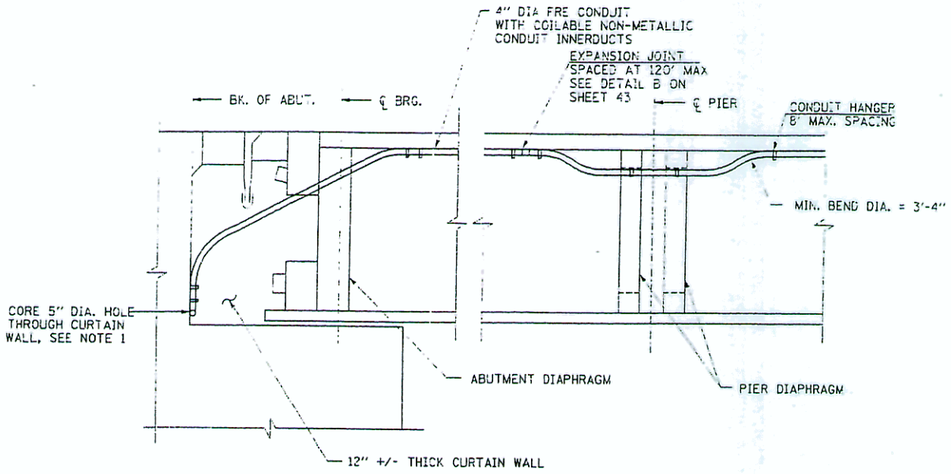

ELEVATION-CONDUIT LAYOUT DETAIL

TYPICAL AT EACH END OF BRIDGE

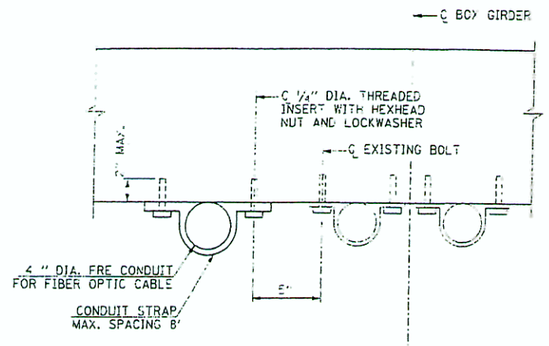

CONDUIT HANGER DETAIL

NOTES:

1. 4" DIA. FRE CONDUIT SHALL PASS THRU THE CURTAIN WALL AND TERMINATE INTO A JUNCTION BOX ATTACHED TO THE EXTERIOR FACE OF THE CURTAIN WALL. THE HOLE SHALL BE SEALED WITH A COMMERCIAL GRADE SILICONE SEALANT.
2. NO DRILLING IS PERMITTED WITHOUT THE APPROVAL OF THE ENGINEER.
3. ALL MATERIAL INCLUDING BUT NOT LIMITED TO CONDUIT, 4" DIA. FRE CONDUIT, 1-1/4" COILABLE NON-METALLIC CONDUITS, JUNCTION BOXES, HANGERS, STRAPS, CORING, EXPANSION JOINTS AND INSERTS NECESSARY TO INSTALL THE CONDUIT TO THE STRUCTURE AS SHOWN ON THIS DRAWING ARE INCLUDED IN PAY ITEM: "CONDUIT ATTACHED TO BRIDGE STRUCTURE, 4", FIBERGLASS REINFORCED EPOXY. SPECIAL".
4. SEE "BRIDGE ATTACHMENT DETAILS" (SHEET NO.44) FOR FIBER OPTIC CONDUIT ATTACHMENTS TO ALL OTHER BRIDGE STRUCTURES.
5. THE 4" FRE CONDUIT SHALL BE BULLET RESISTANT.
6. STEEL NUTS, BOLTS AND WASHERS SHALL BE ACCORDING TO ASTM A307.

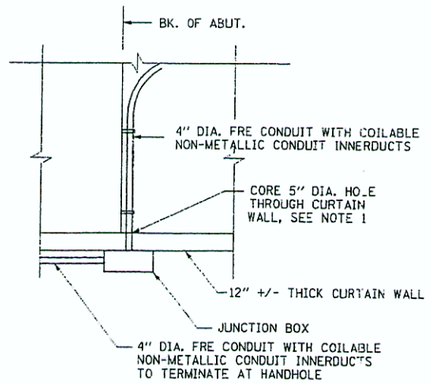

PLAN-CONDUIT LAYOUT DETAIL

TYPICAL AT EACH END OF BRIDGE

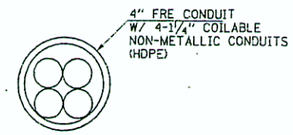

TYPICAL CONDUIT DETAIL

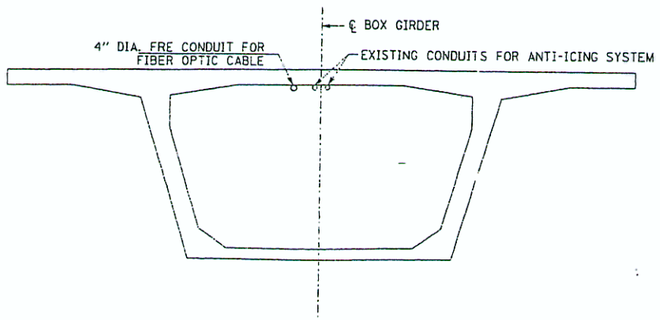

BOX GIRDER BETWEEN PIERS

(LOOKING NORTH)

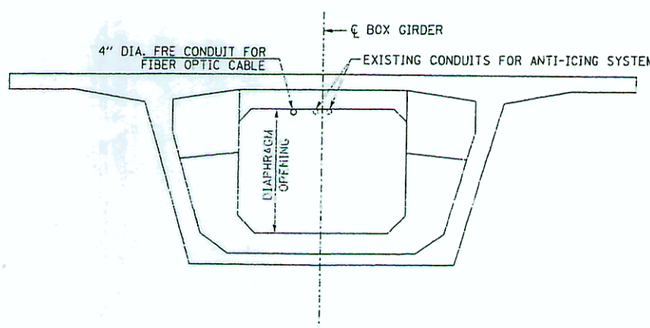

BOX GIRDER AT PIERS

(LOOKING NORTH)

REVISIONS NAME	DATE

ILLINOIS DEPARTMENT OF TRANSPORTATION

KISHWAUKEE RIVER BRIDGE ATTACHMENT DETAILS

SCALE: VERT. N/A HORIZ. N/A

DATE DECEMBER 15, 2006

DRAWN BY CKL

CHECKED BY CAC

PLOT DATE = 12/14/2006
FILE NAME = G:\ENG\86-6798-13 (DOT\Civ\Sht\SHT843_Details_07.dgn
PLOT SCALE = #SCALE#
USER NAME = #USER#

CONTRACT NO. 64C83

F.A.I. RTE.	SECTION	COUNTY	TOTAL SHEETS	SHEET NO.
1339	141 / 201	141 / 201	46	44
STA.		TO STA.		
FED. ROAD DIST. NO.	ILLINOIS FED. AID PROJECT			
*OGLE / WINNEBAGO				

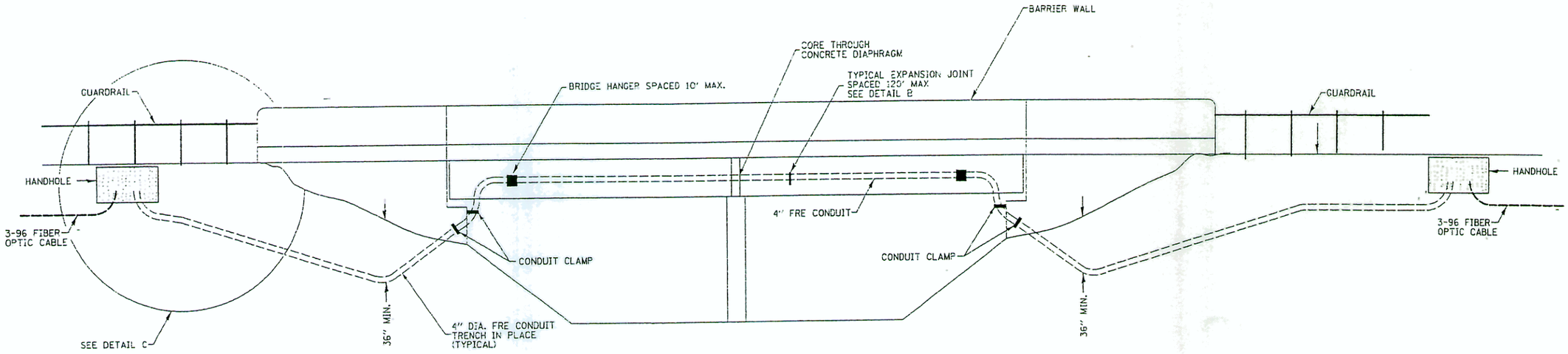

TYPICAL BRIDGE ATTACHMENT DETAIL
NTS

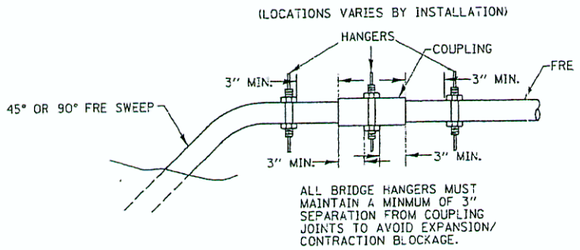

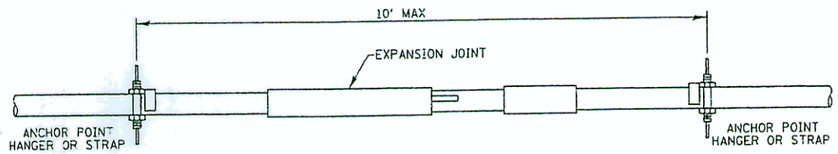

DETAIL B

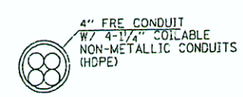

TYPICAL CONDUIT DETAIL

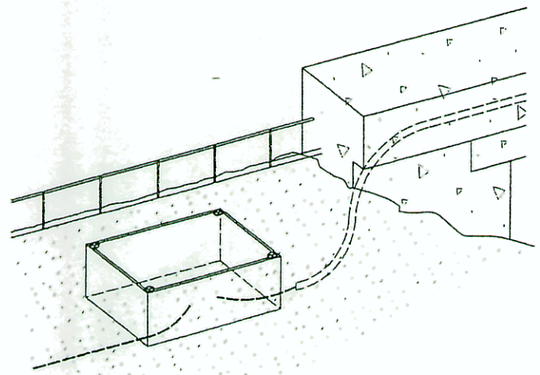

DETAIL C
NTS

NOTES:

1. ALL MATERIAL INCLUDING BUT NOT LIMITED TO CONDUIT, 4" DIA. FRE CONDUIT, 1-1/4" COILABLE NON-METALLIC CONDUITS, HANGERS, STRAPS, CORING, EXPANSION JOINTS AND INSERTS NECESSARY TO INSTALL THE CONDUIT AND CABLE TO THE STRUCTURE AS SHOWN ON THIS DRAWING IS INCLUDED IN PAY ITEM: "CONDUIT ATTACHED TO BRIDGE STRUCTURE, 4", FIBERGLASS REINFORCED EPOXY, SPECIAL".
2. SEE "KISHWAUKEE RIVER BRIDGE ATTACHMENT DETAILS" (SHEET NO. 43) FOR FIBER OPTIC CONDUIT ATTACHMENT TO THE KISHWAUKEE RIVER BRIDGE STRUCTURE.
3. THE 4" FIBERGLASS REINFORCED EPOXY CONDUIT PLACED IN SOIL CONDITIONS SHALL BE TRENCHED IN PLACE AT A MINIMUM DEPTH OF 36".
4. THE 4" FRE CONDUIT SHALL BE BULLET RESISTENT.

REVISIONS	
NAME	DATE

ILLINOIS DEPARTMENT OF TRANSPORTATION

BRIDGE ATTACHMENT DETAILS

SCALE: VERT. N/A HORIZ. N/A
DATE DECEMBER 15, 2006

DRAWN BY CKL
CHECKED BY CAC

PLOT DATE = 12/14/2006
FILE NAME = G:\ENG\06-6790-13 IDOT\Civ\Sht\SHT#44_Details_08.dgn
PLOT SCALE = $SCALE$
USER NAME = $USER$

CONTRACT NO. 64C83

F.A.I. RTE.	SECTION	COUNTY	TOTAL SHEETS	SHEET NO.
39	141 / 201	*	46	45

STA. TO STA.

FED. ROAD DIST. NO. ILLINOIS FED. AID PROJECT

*OGLE / WINNEBAGO

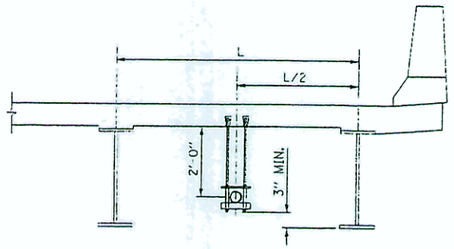

TYPICAL SECTION

DETAILS FOR PPC BEAMS SIMILAR
SEE NOTE 5

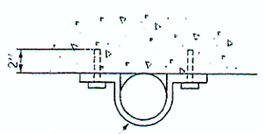

CONDUIT STRAP

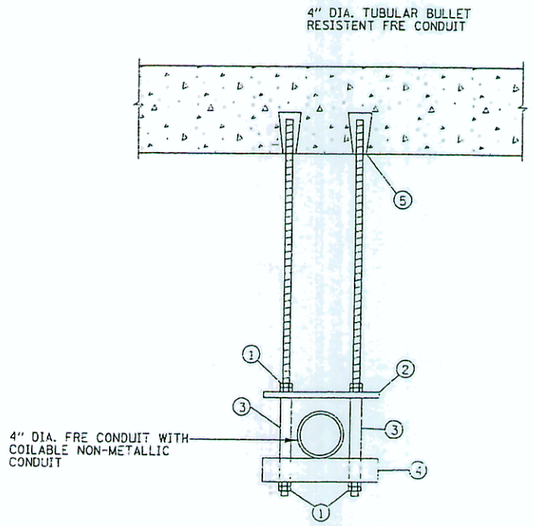

CONDUIT HANGER DETAIL

1. 5/8" DIA. ALL-THREAD ROD WITH TWO HEX NUTS. ONE FLAT AND ONE LOCK WASHER , H.D.G. (TYP.) AND ONE 1/4" NYLON VIBRATION DAMPING WASHER.
2. 1/2" X 2" FIBERGLASS FLAT BAR
3. 1" O.D. FIBERGLASS ROUND TUBE (TYP.)
4. 2" X 2" X 1/4" FIBERGLASS SQUARE TUBE
5. EXPANSION ANCHORS - 3" MINIMUM EMBEDMENT

NOTES:

1. ALL HARDWARE (INCLUDING INSERTS) SHALL BE ASTM A307 AND BE HOT DIP GALVANIZED IN ACCORDANCE WITH ASTM A123.
2. ALL-THREAD ROD TO BE CUT FROM 12'-0" HOT DIP GALVANIZED STOCK AND ENDS TO BE COLD GALVANIZED AFTER SIZING AND DRESSING OPERATION (A307).
3. INSERT TO BE STAINLESS STEEL WEDGE ANCHOR TO BE INSTALLED IN ACCORDANCE WITH MANUFACTURER'S INSTRUCTIONS.
4. LOW POINT OF HANGER MUST BE ABOVE BOTTOM FLANGE OF GIRDER.
5. FOR THE PPC BEAM STRUCTURES, IT WILL BE NECESSARY TO CORE A 5" DIAMETER HOLE THROUGH THE PIER DIAPHRAGMS. THE APPROXIMATE DIAPHRAGM THICKNESS IS 2'-0".
6. ALL MATERIAL INCLUDING BUT NOT LIMITED TO CONDUIT, 4" DIA. FRE CONDUIT, 1-1/4" COILABLE NON-METALLIC CONDUITS, HANGERS, STRAPS, CORING, EXPANSION JOINTS AND INSERTS NECESSARY TO INSTALL THE CONDUIT AND CABLE TO THE STRUCTURE AS SHOWN ON THIS DRAWING IS INCLUDED IN PAY ITEM: "CONDUIT ATTACHED TO BRIDGE STRUCTURE, 4", FIBERGLASS REINFORCED EPOXY. SPECIAL".
7. THE 4" FRE CONDUIT SHALL BE BULLET RESISTANT.

REVISIONS	
NAME	DATE

ILLINOIS DEPARTMENT OF TRANSPORTATION

MISCELLANEOUS BRIDGE ATTACHMENT DETAILS

SCALE: VERT. N/A HORIZ. N/A
DATE DECEMBER 15, 2006

DRAWN BY CKL
CHECKED BY CAC

PLOT DATE = 12/14/2006
FILE NAME = G:\FAP\06-6798-13 IDOT\Civ\Sht\SHT045_Details.dgn
PLOT SCALE = $SCALE$
USER NAME = $USER$

CONTRACT NO. 64C83

F.A.I. RTE.	SECTION	COUNTY	TOTAL SHEETS	SHEET NO.
39	141 / 201	*	46	46
* STA.	TO STA.			
FED. ROAD DIST. NO.	ILLINOIS FED. AID PROJECT			
*OGLE / WINNEBAGO				

STORM WATER POLLUTION PREVENTION PLAN
EROSION CONTROL PLAN

THE FOLLOWING PLAN WAS ESTABLISHED AND INCLUDED IN THESE PLANS TO DIRECT THE CONTRACTOR IN THE PLACEMENT OF TEMPORARY EROSION CONTROL SYSTEMS AND TO PROVIDE A STORM WATER POLLUTION PREVENTION PLAN FOR COMPLIANCE UNDER NPDES.

THE PURPOSE OF THIS PLAN IS TO MINIMIZE SILTATION WITHIN THE CONSTRUCTION ZONE AND TO ELIMINATE SEDIMENTS FROM ENTERING AND LEAVING THE CONSTRUCTION ZONE BY UTILIZING PROPER TEMPORARY EROSION CONTROL SYSTEMS AND PROVIDING GROUND COVER WITHIN A REASONABLE AMOUNT OF TIME.

CERTAIN ITEMS, AS SHOWN IN THIS PLAN AND REFERENCED BY THE LEGEND, SHALL BE PLACED BY THE CONTRACTOR AT THE BEGINNING OF CONSTRUCTION. OTHER ITEMS SHALL BE PLACED BY THE CONTRACTOR AS DIRECTED BY THE ENGINEER ON A CASE BY CASE SITUATION RESULTING FROM THE CONTRACTOR'S SEQUENCE OF ACTIVITIES, TIME OF YEAR, AND EXPECTED WEATHER CONDITIONS.

THE CONTRACTOR SHALL PLACE PERMANENT EROSION CONTROL SYSTEMS AND SEEDING WITHIN A REASONABLE AMOUNT OF TIME: THEREFORE, REDUCING THE AMOUNT OF AREA BEING OPEN TO THE POSSIBILITY OF EROSION AND REDUCING THE AMOUNT OF TEMPORARY SEEDING. THE RESIDENT ENGINEER WILL DETERMINE IF TEMPORARY EROSION CONTROL SYSTEMS SHOWN IN THE PLAN CAN BE DELETED, THE SIZE OF THE PROPOSED DITCH CHECKS, THE PROPER METHOD OF INSTALLATION, AND IF ANY ADDITIONAL TEMPORARY EROSION CONTROL SYSTEMS SHALL BE ADDED WHICH ARE NOT INCLUDED IN THE PLANS. THE CONTRACTOR SHALL PERFORM ALL WORK AS DIRECTED BY THE ENGINEER AND AS SHOWN IN STANDARD 280001 OF THE PLANS,

SITE DESCRIPTION
DESCRIPTION OF CONSTRUCTION ACTIVITY: CONSTRUCTION OF FIBER OPTIC SYSTEM WITHIN I-39 R.O.W. EXTENDING FROM I-88 TO I-90. CONSTRUCTION BY DIRECT BURIAL, DIRECTIONAL BORING, ROCK EXCAVATION, AND ATTACHMENT TO BRIDGE STRUCTURES THAT CARRY I-39 OVER OTHER FEATURES. WORK INCLUDES HANDHOLE PLACEMENTS, AGRICULTURAL DRAINAGE TILE REPAIR DAMAGED BY FIBER CONSTRUCTION ACTIVITIES. AND SEEDING AND FERTILIZER PLACEMENT.

DESCRIPTION OF INTENDED SEQUENCE OF ACTIVITIES:
THE SEQUENCE OF EVENTS ARE AS FOLLOW: CLEARING, EMBANKMENT, EXCAVATION, GRADING AND PAVING. THIS PROJECT WILL BE CONSTRUCTED IN SEGMENTS AS SHOWN IN THE "STAGING PLANS".

TOTAL CONSTRUCTION SITE (CONSTRUCTION LIMIT TO CONSTRUCTION LIMIT) 28.3 ACRES

PROPOSED R.O.W. (TOTAL PARCEL AREA) 0.0 ACRES

DISTURBED BY EXCAVATION (E.O.P. TO CONSTRUCTION LIMIT) 5.67 ACRES

SUPPORTING REPORTS AND PLANS
THE FOLLOWING ASSISTED IN DEVELOPING THE EROSION CONTROL PLAN AS REFERENCED DOCUMENTS:

SOIL PROFILE SHEETS, SOILS REPORTS, BORING LOGS
USGS DRAINAGE MAPS, PROJECT PLAN DOCUMENTS

DRAINAGE TRIBUTARIES RECEIVING WATER FROM CONSTRUCTION SITE
KILBUCK CREEK; KISHWAUKEE RIVER; MADIGAN CREEK

EROSIONS CONTROLS AND SEDIMENT CONTROL PROCEDURES
STABILIZATION PRACTICES AT THE BEGINNING OF CONSTRUCTION:
PERIMETER EROSION CONTROL SHALL BE PLACED PRIOR TO BEGINNING EARTHWORK.

STABILIZATION PRACTICES DURING CONSTRUCTION:
AS EARTH EXCAVATION AND EMBANKMENT ARE BEING COMPLETED THE CONTRACTOR SHALL PLACE DITCH CHECKS, INLET AND PIPE PROTECTION, EROSION CONTROL BLANKET, AND SEEDING AS STAGES OF THE PROJECT ARE COMPLETED. PERIMETER EROSION BARRIER WILL BE INSTALLED AT ADDITIONAL LOCATIONS AS THE PROJECT PROGRESSES. SEEDING SHALL BE COMPLETED AS SPECIFIED IN THE EROSION CONTROL/ SEEDING MOBILIZATION AND TEMPORARY SEEDING SPECIAL PROVISION.

MAINTENANCE AFTER FINAL GRADING
TEMPORARY EROSION CONTROL SYSTEMS SHALL BE LEFT IN PLACE WITH PROPER MAINTENANCE UNTIL PERMANENT EROSION CONTROL IS IN PLACE AND WORKING PROPERLY AND ALL PROPOSED TURF AREAS SEEDED AND ESTABLISHED WIYH THE PROPER STAND. ONCE PERMANENT EROSION CONTROL SYSTEMS AS PROPOSED IN THE PLANS ARE FUNCTIONAL AND ESTABLISHED, TEMPORARY ITEMS SHALL BE REMOVED, CLEANED UP AND DISTURBED TURF RESEEDED.

PLOT DATE = 12/14/2005
FILE NAME = G:\ENG\06-6798-13 (DOT\Civil\Sht\SHT#46_StormWater.dgn
PLOT SCALE = $SCALE$
USER NAME = $USER$

ABV	ABOVE
A/C	ACCESS CONTROL
AC	ACRE
ADJ	ADJUST
AS	AERIAL SURVEYS
AGG	AGGREGATE
AH	AHEAD
APT	APARTMENT
ASPH	ASPHALT
AUX	AUXILIARY
AGS	AUXILIARY GAS VALVE (SERVICE)
AVE	AVENUE
AX	AXIS OF ROTATION
BK	BACK
B-B	BACK TO BACK
BKPL	BACKPLATE
B	BARN
BARR	BARRICADE
BGN	BEGIN
BM	BENCHMARK
BIND	BINDER
BIT	BITUMINOUS
BTM	BOTTOM
BLVD	BOULEVARD
BRK	BRICK
BBOX	BUFFALO BOX
BLDG	BUILDING
CIP	CAST IRON PIPE
CB	CATCH BASIN
C-C	CENTER TO CENTER
CL	CENTERLINE OR CLEARANCE
CL-E	CENTERLINE TO EDGE
CL-F	CENTERLINE TO FACE
CTS	CENTERS
CERT	CERTIFIED
CHSLD	CHISELED
CS	CITY STREET
CP	CLAY PIPE
CLSD	CLOSED
CLID	CLOSED LID
CT	COAT OR COURT
COMB	COMBINATION
C	COMMERCIAL BUILDING
CE	COMMERCIAL ENTRANCE
CONC	CONCRETE
CONST	CONSTRUCT
CONTD	CONTINUED
CONT	CONTINUOUS
COR	CORNER
CORR	CORRUGATED
CMP	CORRUGATED METAL PIPE
CNTY	COUNTY
CH	COUNTY HIGHWAY
CSE	COURSE
XSECT	CROSS SECTION
m^3	CUBIC METER
mm^3	CUBIC MILLIMETER
CU YD	CUBIC YARD
CULV	CULVERT
C&G	CURB & GUTTER
D	DEGREE OF CURVE
DC	DEPRESSED CURVE
DET	DETECTOR
DIA	DIAMETER
DIST	DISTRICT
DOM	DOMESTIC
DBL	DOUBLE
DSEL	DOWNSTREAM ELEVATION
DSFL	DOWNSTREAM FLOWLINE
DR	DRAINAGE OR DRIVE
DI	DRAINAGE INLET OR DROP INLET
DRV	DRIVEWAY
DCT	DUCT
EA	EACH
EB	EASTBOUND
EOP	EDGE OF PAVEMENT
E-CL	EDGE TO CENTERLINE
E-E	EDGE TO EDGE
EL	ELEVATION
ENTR	ENTRANCE
EXC	EXCAVATION
EX	EXISTING
EXPWAY	EXPRESSWAY
E	EXTERNAL DISTANCE OF HORIZONTAL CURVE
E	OFFSET DISTANCE TO VERTICAL CURVE
F-F	FACE TO FACE
FA	FEDERAL AID
FAI	FEDERAL AID INTERSTATE
FAP	FEDERAL AID PRIMARY
FAS	FEDERAL AID SECONDARY
FAUS	FEDERAL AID URBAN SECONDARY
FP	FENCE POST
FE	FIELD ENTRANCE
FH	FIRE HYDRANT
FL	FLOW LINE
FB	FOOT BRIDGE
FDN	FOUNDATION
FR	FRAME
F&G	FRAME & GRATE
FRWAY	FREEWAY
GAL	GALLON
GALV	GALVANIZED
G	GARAGE
GM	GAS METER
GV	GAS VALVE
GRAN	GRANULAR
GR	GRATE
GRVL	GRAVEL
GND	GROUND
GUT	GUTTER
GP	GUY POLE
GW	GUY WIRE
HH	HANDHOLE
HATCH	HATCHING
HD	HEAD
HDW	HEADWALL
HDUTY	HEAVY DUTY
ha	HECTARE
HWY	HIGHWAY
HORIZ	HORIZONTAL
HSE	HOUSE
IL	ILLINOIS
IMP	IMPROVEMENT
IN DIA	INCH DIAMETER
INL	INLET
INST	INSTALLATION
IDS	INTERSECTION DESIGN STUDY
INV	INVERT
IP	IRON PIPE
IR	IRON ROD
JT	JOINT
kg	KILOGRAM
km	KILOMETER
LS	LANDSCAPING
LN	LANE
LT	LEFT
LP	LIGHT POLE
LGT	LIGHTING
LF	LINEAL FEET OR LINEAR FEET
L	LITER OR CURVE LENGTH
LC	LONG CHORD
LNG	LONGITUDINAL
L SUM	LUMP SUM
MACH	MACHINE
MB	MAIL BOX
MH	MANHOLE
MATL	MATERIAL
MED	MEDIAN
m	METER
METH	METHOD
M	MID-ORDINATE
mm	MILLIMETER
mm DIA	MILLIMETER DIAMETER
MIX	MIXTURE
MBH	MOBILE HOME
MOD	MODIFIED
MFT	MOTOR FUEL TAX
N & BC	NAIL & BOTTLE CAP
N & C	NAIL & CAP
N & W	NAIL & WASHER
NOAA	NATIONAL OCEANIC ATMOSPHERIC ADMINISTRATION
NC	NORMAL CROWN
NB	NORTHBOUND
NE	NORTHEAST
NW	NORTHWEST
OLID	OPEN LID
PAT	PATTERN
PVD	PAVED
PVMT	PAVEMENT
PM	PAVEMENT MARKING
PED	PEDESTAL
PNT	POINT
PC	POINT OF CURVATURE
PI	POINT OF INTERSECTION OF HORIZONTAL CURVE
PRC	POINT OF REVERSE CURVE
PT	POINT OF TANGENCY
POT	POINT ON TANGENT
POLYETH	POLYETHYLENE
PCC	PORTLAND CEMENT CONCRETE
PP	POWER POLE OR PRINCIPAL POINT
PRM	PRIME
PE	PRIVATE ENTRANCE
PROF	PROFILE
PGL	PROFILE GRADELINE
PROJ	PROJECT
P.C.	PROPERTY CORNER
PL	PROPERTY LINE
PR	PROPOSED
R	RADIUS
RR	RAILROAD
RRS	RAILROAD SPIKE
RPS	REFERENCE POINT STAKE
REF	REFLECTIVE
RCCP	REINFORCED CONCRETE CULVERT PIPE
REINF	REINFORCEMENT
REM	REMOVAL
RC	REMOVE CROWN
REP	REPLACEMENT
REST	RESTAURANT
RESURF	RESURFACING
RET	RETAINING
RT	RIGHT
ROW	RIGHT-OF-WAY
RD	ROAD
RDWY	ROADWAY
RTE	ROUTE
SAN	SANITARY
SANS	SANITARY SEWER
SEC	SECTION
SEED	SEEDING
SHAP	SHAPING
S	SHED
SH	SHEET
SHLD	SHOULDER
SW	SIDEWALK OR SOUTHWEST
SIG	SIGNAL
SOD	SODDING
SM	SOLID MEDIAN
SB	SOUTHBOUND
SE	SOUTHEAST
SPL	SPECIAL
SD	SPECIAL DITCH
SQ FT	SQUARE FEET
m^2	SQUARE METER
mm^2	SQUARE MILLIMETER
SQ YD	SQUARE YARD
STB	STABILIZED
STD	STANDARD
SBI	STATE BOND ISSUE
SR	STATE ROUTE
STA	STATION
SPBGR	STEEL PLATE BEAM GUARDRAIL
SS	STORM SEWER
STY	STORY
ST	STREET
STR	STRUCTURE
e	SUPERELEVATION RATE
S.E. RUN.	SUPERELEVATION RUNOFF LENGTH
SURF	SURFACE
SMK	SURVEY MARKER
T	TANGENT DISTANCE
T.R.	TANGENT RUNOUT DISTANCE
TEL	TELEPHONE
TB	TELEPHONE BOX
TP	TELEPHONE POLE
TEMP	TEMPORARY
TBM	TEMPORARY BENCH MARK
TD	TILE DRAIN
TBE	TO BE EXTENDED
TBR	TO BE REMOVED
TBS	TO BE SAVED
TWP	TOWNSHIP
TR	TOWNSHIP ROAD
TS	TRAFFIC SIGNAL
TSCB	TRAFFIC SIGNAL CONTROL BOX
TSC	TRAFFIC SYSTEMS CENTER
TRVS	TRANSVERSE
TRVL	TRAVEL
TRN	TURN
TY	TYPE
T-A	TYPE A
TYP	TYPICAL
UNDGND	UNDERGROUND
USGS	U.S. GEOLOGICAL SURVEY
USEL	UPSTREAM ELEVATION
USFL	UPSTREAM FLOWLINE
UTIL	UTILITY
VBOX	VALVE BOX
VV	VALVE VAULT
VLT	VAULT
VEH	VEHICLE
VP	VENT PIPE
VERT	VERTICAL
VC	VERTICAL CURVE
VPC	VERTICAL POINT OF CURVATURE
VPI	VERTICAL POINT OF INTERSECTION
VPT	VERTICAL POINT OF TANGENCY
WM	WATER METER
WV	WATER VALVE
WMAIN	WATER MAIN
WB	WESTBOUND
WILDFL	WILDFLOWERS
W	WITH
WO	WITHOUT

Illinois Department of Transportation

PASSED January 1, 2002
ENGINEER OF POLICY AND PROCEDURES

APPROVED January 1, 2002
ENGINEER OF DESIGN AND ENVIRONMENT

ISSUED 1-1-97

DATE	REVISIONS
1-1-02	Updated abbreviations
	and symbols.
1-1-00	Revised abbreviations.

STANDARD SYMBOLS, ABBREVIATIONS AND PATTERNS

STANDARD 000001-04

ADJUSTMENT ITEMS

	EX	PR
Structure To Be Adjusted		ADJ
Structure To Be Cleaned		C
Structure To Be Filled		F
Structure To Be Removed		R
Structure To Be Reconstructed		REC
Frame and Grate To Be Adjusted		A
Frame and Lid To Be Adjusted		A
Domestic Service Box To Be Adjusted		A
Valve Vault To Be Adjusted		A
Special Adjustment		SP
Item To Be Abandoned		AB
Item To Be Moved		M
Item To Be Relocated		REL
Pavement Removal and Replacement		

ALIGNMENT ITEMS

	EX	PR
Baseline		
Centerline		
Centerline Break Circle		
Baseline Symbol		
Centerline Symbol		
PI Indicator		
Point Indicator		
Horiz Curve Data	CURVE P.I. STA= Δ= R= T= L= E= e= T.R.= S.E. RUN= P.C. STA= P.T. STA=	CURVE P.I. STA= Δ= R= T= L= E= e= T.R.= S.E. RUN= P.C. STA= P.T. STA=

BOUNDARIES ITEMS

	EX	PR
Dashed Property Line		
Solid Property/Lot Line		
Section/Grant Line		
County/Township Line		
State Line		
Iron Pipe Found		
Iron Pipe Set		
Survey Marker		
Property Line Symbol		
Same Ownership Symbol		
Northwest Quarter Corner		
Section Corner		
Southeast Quarter Corner		

CONTOUR ITEMS

	EX	PR
Approx. Index Line		
Approx. Intermediate Line		
Index Contour		
Intermediate Contour		
Slope Limit Line		

DRAINAGE ITEMS

	EX	PR
Culvert Line		
Ditch Profile Line		
Grading & Shaping Ditches		
Drainage Boundary Line		
Paved Ditch		
Aggregate Ditch		
Flowline		
Ditch Check		
Headwall		
Inlet		
Manhole		
Summit		
Roadway Ditch Flow		
Swale		
Catch Basin		
Culvert End Section		
Water Surface Indicator		
Riprap		

Illinois Department of Transportation

PASSED January 1, 2002
ENGINEER OF POLICY AND PROCEDURES
APPROVED January 1, 2002
ENGINEER OF DESIGN AND ENVIRONMENT

ISSUED 1-1-97

STANDARD SYMBOLS, ABBREVIATIONS AND PATTERNS

STANDARD 000001-04

EROSION & SEDIMENT CONTROL ITEMS

	EX	PR
Cleaning & Grading Limits		
Dike		
Erosion Control Fence		
Perimeter Erosion Barrier		
Temporary Fence		
Ditch Check Temporary		
Ditch Check Permanent		
Inlet & Pipe Protection		
Sediment Basin		
Erosion Control Blanket		
Fabric Formed Concrete Revetment Mat		
Turf Reinforcement Mat		
Mulch Temporary		
Mulch Method 1		
Mulch Method 2 Stabilized		
Mulch Method 3 Hydraulic		

EXISTING IMPROVEMENT ITEMS

	EX	PR
Noise Attn./Levee		
Fence		
Base of Levee		
Mailbox		
Pay Telephone		
Advertising Sign		

LANDSCAPING ITEMS

	EX	PR
Contour Mounding Line		
Shrubs		
Mowline		
Perennial Plants		
Seeding Class 2		
Seeding Class 2A		
Seeding Class 3		
Seeding Class 4		
Seeding Class 4 & 5 Combined		
Seeding Class 5		
Seeding Class 7		

EXISTING LANDSCAPING ITEMS (cont.)

	EX	PR
Seedlings Type 1		
Seedlings Type 2		
Sodding		
Mowstake w/Sign		
Tree Trunk Protection		
Evergreen Tree	E	
Shade Tree	E	

LIGHTING

	EX	PR
Cable In Duct w/o Ground		
Conduit w/Ground		
Electrical Aerial Cable	A	A
Electrical Buried Cable	L	L
Controller		
Underpass Luminaire		
Power Pole		
Pull Point	P	P

Illinois Department of Transportation

PASSED January 1, 2002
ENGINEER OF POLICY AND PROCEDURES
APPROVED January 1, 2002
ENGINEER OF DESIGN AND ENVIRONMENT

ISSUED 1-1-02

STANDARD SYMBOLS, ABBREVIATIONS AND PATTERNS

STANDARD 000001-04

EROSION & SEDIMENT CONTROL ITEMS

	EX	PR
Cleaning & Grading Limits		
Dike		
Erosion Control Fence		
Perimeter Erosion Barrier		
Temporary Fence		
Ditch Check Temporary		
Ditch Check Permanent		
Inlet & Pipe Protection		
Sediment Basin		
Erosion Control Blanket		
Fabric Formed Concrete Revetment Mat		
Turf Reinforcement Mat		
Mulch Temporary		
Mulch Method 1		
Mulch Method 2 Stabilized		
Mulch Method 3 Hydraulic		

EXISTING IMPROVEMENT ITEMS

	EX	PR
Noise Attn./Levee		
Fence		
Base of Levee		
Mailbox		
Pay Telephone		
Advertising Sign		

LANDSCAPING ITEMS

	EX	PR
Contour Mounding Line		
Shrubs		
Mowline		
Perennial Plants		
Seeding Class 2		
Seeding Class 2A		
Seeding Class 3		
Seeding Class 4		
Seeding Class 4 & 5 Combined		
Seeding Class 5		
Seeding Class 7		

EXISTING LANDSCAPING ITEMS (cont.)

	EX	PR
Seedlings Type 1		
Seedlings Type 2		
Sodding		
Mowstake w/Sign		
Tree Trunk Protection		
Evergreen Tree	E	
Shade Tree	E	+

LIGHTING

	EX	PR
Cable In Duct w/o Ground		
Conduit w/Ground		
Electrical Aerial Cable	A	A
Electrical Buried Cable	L	L
Controller		
Underpass Luminaire		
Power Pole		
Pull Point	P	P

Illinois Department of Transportation

PASSED January 1, 2002
ENGINEER OF POLICY AND PROCEDURES

APPROVED January 1, 2002
ENGINEER OF DESIGN AND ENVIRONMENT

ISSUED 1-1-97

STANDARD SYMBOLS, ABBREVIATIONS AND PATTERNS

STANDARD 000001-04

LIGHTING (cont.)

	EX	PR
Handhole		
Heavy Duty Handhole		
Junction Box		
Light Unit Comb.		
Electrical Ground		
Traffic Flow Arrow		
High Mast Pole		
Light Unit-1		

PAVEMENT (MISC.)

	EX	PR
Keyed Long. Joint		
Keyed Long. Joint w/Tie Bars		
Sawed Long. Joint w/Tie Bars		
Bituminous Shoulder		
Bituminous Taper		
Stabilized Driveway		
Widening		

PAVEMENT MARKINGS

	EX	PR
RR Crossing		
Raised Marker Amber 1 Way		
Raised Marker Amber 2 Way		
Raised Marker Crystal 1 Way		
Two Way Turn Left		
Shoulder Diag. Pattern		
Skip-Dash White		
Skip-Dash Yellow		
Stop Line		
Solid Line		
Double Centerline		
Dotted Lines		
CL 2Ln 2Way RRPM 12.2 m (40') o.c.		
CL 2Ln 2Way RRPM 24.4 m (80') o.c.		
CL Multilane Div. RRPM 12.2 m (40') o.c.		
CL Multilane Div. RRPM 24.4 m (80') o.c.		
CL Multilane Div. Dbl. RRPM 24.4 m (80') o.c.		
CL Multilane Undiv.		
Two Way Turn Left Line		

Illinois Department of Transportation

PASSED January 1, 2002
ENGINEER OF POLICY AND PROCEDURES

APPROVED January 1, 2002
ENGINEER OF DESIGN AND ENVIRONMENT

ISSUED 1-1-97

STANDARD SYMBOLS, ABBREVIATIONS AND PATTERNS

STANDARD 000001-04

LIGHTING (cont.)

	EX	PR
Handhole		
Heavy Duty Handhole		
Junction Box		
Light Unit Comb.		
Electrical Ground		
Traffic Flow Arrow	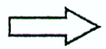	
High Mast Pole		
Light Unit-1		

PAVEMENT (MISC.)

	EX	PR
Keyed Long. Joint		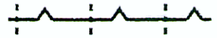
Keyed Long. Joint w/Tie Bars		
Sawed Long. Joint w/Tie Bars		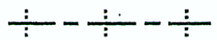
Bituminous Shoulder		
Bituminous Taper		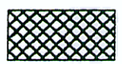
Stabilized Driveway		
Widening		

PAVEMENT MARKINGS

	EX	PR
RR Crossing		
Raised Marker Amber 1 Way		
Raised Marker Amber 2 Way		
Raised Marker Crystal 1 Way		
Two Way Turn Left		
Shoulder Diag. Pattern	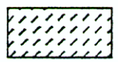	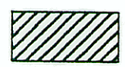
Skip-Dash White		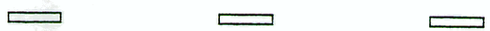
Skip-Dash Yellow		
Stop Line	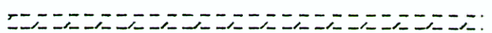	
Solid Line		
Double Centerline		
Dotted Lines		
CL 2Ln 2Way RRPM 12.2 m (40') o.c.		
CL 2Ln 2Way RRPM 24.4 m (80') o.c.		
CL Multilane Div. RRPM 12.2 m (40') o.c.		
CL Multilane Div. RRPM 24.4 m (80') o.c.		
CL Multilane Div. Dbl. RRPM 24.4 m (80') o.c.		
CL Multilane Undiv.		
Two Way Turn Left Line		

Illinois Department of Transportation

PASSED January 1, 2002
ENGINEER OF POLICY AND PROCEDURES

APPROVED January 1, 2002
ENGINEER OF DESIGN AND ENVIRONMENT

ISSUED 1-1-97

STANDARD SYMBOLS, ABBREVIATIONS AND PATTERNS

(Sheet 4 of 8)

STANDARD 000001-04

PAVEMENT MARKINGS (cont.)

	EX	PR
Urban Combination Left Only		
Urban Combination Right Only		
Urban Left Turn Arrow		
Urban Right Turn Arrow		
Urban Left Turn Only		
Urban Right Turn Only		
Urban Thru Only		
Rural Combination Left Only		
Rural Combination Right Only		
Rural Left Turn Arrow		
Rural Right Turn Arrow		
Rural Left Turn Only		
Rural Right Turn Only		
Rural Thru Only		

RAILROAD ITEMS

	EX	PR
Abandoned Railroad		
Railroad	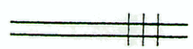	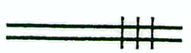
Railroad Point		
Control Box		
Crossing Gate		
Flashing Signal		
Railroad Cant. Mast Arm		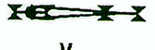
Crossbuck		

REMOVAL ITEMS

	EX	PR
Removal Tic		
Bituminous Removal		
Hatch Pattern		

RIGHT OF WAY ITEMS

	EX	PR
Future ROW Corner Monument		
ROW Marker		
ROW Line		
Easement		
Temporary Easement		

Illinois Department of Transportation

PASSED January 1, 2002
ENGINEER OF POLICY AND PROCEDURES
APPROVED January 1, 2002
ENGINEER OF DESIGN AND ENVIRONMENT

ISSUED 1-1-97

STANDARD SYMBOLS, ABBREVIATIONS AND PATTERNS

(Sheet 5 of 8)

STANDARD 000001-04

ROADWAY PLAN ITEMS

	EX	PR
Edge of Pavement		
Bit Shoulders, Medians and C&G Line		
Aggregate Shoulder		
Sidewalks, Driveways		
Guardrail		
Guardrail Post		
Traffic Sign		
Corrugated Median		

ROADWAY PROFILES

	EX	PR
Profile Line		
P.I. Indicator		
Point Indicator		
Earthworks Balance Point		
Begin Point		
Vert. Curve Data	VPI = ELEV = L = E =	VPI = ELEV = L = E =

SIGNING ITEMS

	EX	PR
Barricade Type 1 or 2		
Barricade Type II		

SIGNING ITEMS (cont.)

	EX	PR
Barricade Type III		
Barricade With Edge Line		
Flashing Light Sign		
Panels I		
Panels II		
Sign Flag		
Direction of Traffic		
Detour M4-10L-(0)		DETOUR
Detour M4-10R-(0)		DETOUR
One Way Left R6-1L		ONE WAY
One Way Right R6-1R		ONE WAY
One Way Arrow Lrg. W1-6-(0)		
Two Way Arrow Large W1-7-(0)		
Reverse Left W1-4L		
Reverse Right W1-4R		
Two Way Traffic Sign W6-3		

SIGNING ITEMS (cont.)

	EX	PR
Detour Ahead W20-2		DETOUR AHEAD
Left Lane Closed Ahead		LEFT LANE CLOSED AHEAD
Road Closed Ahead W20-R-(0)		RIGHT LANE CLOSED AHEAD
Road Closed Ahead W20-3-(0)		ROAD CLOSED AHEAD
Road Construction Ahead W20-1-(0)		ROAD CONSTRUCTION AHEAD
Single Lane Ahead		SINGLE LANE AHEAD
Transition Left W4-2L		
Transition Right W4-2R		

Illinois Department of Transportation

PASSED January 1, 2002
ENGINEER OF POLICY AND PROCEDURES
APPROVED January 1, 2002
ENGINEER OF DESIGN AND ENVIRONMENT

ISSUED 1-1-97

STANDARD SYMBOLS, ABBREVIATIONS AND PATTERNS

(Sheet 6 of 8)

STANDARD 000001-04

SIGNING ITEMS (cont.)

	EX	PR
Left Turn Lane R3-1100L		LEFT TURN LANE
Keep Left R4-7AL		KEEP LEFT
Keep Left R4-7BL		KEEP LEFT
Keep Right R4-7AR		KEEP RIGHT
Keep Right R4-7BR		KEEP RIGHT
Stop Here On Red R10-6-AL		STOP HERE ON RED
Stop Here On Red R10-6-AR		STOP HERE ON RED
No Left Turn R3-2		
No Right Turn R3-1		
Road Closed R11-2		ROAD CLOSED
Road Closed Thru Traffic R11-2		ROAD CLOSED TO THRU TRAFFIC

Illinois Department of Transportation

PASSED January 1, 2002
ENGINEER OF POLICY AND PROCEDURES

APPROVED January 1, 2002
ENGINEER OF DESIGN AND ENVIRONMENT

ISSUED 1-1-97

TRAFFIC SHEET ITEMS

	EX	PR
Cable Number		
Left Turn Green		
Left Turn Yellow		
Signal Backplate		
Signal Section 200 mm (8")		
Signal Section 300 mm (12")		
Walk/Don't Walk Letters		
Walk/Don't Walk Symbols		

TRAFFIC SIGNAL ITEMS

	EX	PR
Galv. Steel Conduit		
Underground Cable		
Detector Loop Line		
Detector Loop Large		
Detector Loop Small		
Detector Loop Quadrapole		
Detector Raceway		
Aluminum Mast Arm		
Steel Mast Arm		
Veh. Detector Magnetic		

TRAFFIC SIGNAL ITEMS (cont.)

	EX	PR
Conduit Splice		
Controller		
Gulfbox Junction		
Wood Pole		
Temp. Signal Head		
Handhole		
Heavy Duty Handhole		
Junction Box		
Ped. Pushbutton Detector		
Ped. Signal Head		
Power Pole Service		
Priority Veh. Detector		
Signal Head		
Signal Head w/Backplate		
Signal Post		

UNDERGROUND UTILITY ITEMS

	EX	PR
Cable TV	CTV CTV	CTV CTV
Electric Cable	E E	E E
Fiber Optic	FO FO	FO FO
Gas Pipe	G	G
Oil Pipe	O	O
Pipe Underdrain		

STANDARD SYMBOLS, ABBREVIATIONS AND PATTERNS

STANDARD 000001-04

UNDERGROUND UTILITY ITEMS (cont.)

	EX	PR
Sanitary Sewer		
Storm Sewer		
Telephone Cable		
Water Pipe		

UTILITIES ITEMS

	EX	PR
Controller		
Double Handhole		
Fire Hydrant		
Handhole		
Heavy Duty Handhole		
Junction Box		
LIght Pole		
Manhole		
Power Pole		
Splice Box Above Ground		
Telephone Splice Box Above Ground		
Telephone Pole		
Traffic Signal		
Water Meter Valve Box		

VEGETATION ITEMS

	EX	PR
Deciduous Tree		
Bush		
Evergreen Tree		
Stump		
Vegetation Line		
Woods & Bush Line		

WATER FEATURE ITEMS

	EX	PR
Stream or Drainage Ditch		
Waters Edge		
Water Surface Indicator		
Water Point		
Disappearing Ditch		
Marsh		

Illinois Department of Transportation

PASSED January 1, 2002
ENGINEER OF POLICY AND PROCEDURES
APPROVED January 1, 2002
ENGINEER OF DESIGN AND ENVIRONMENT

ISSUED 1-1-97

STANDARD SYMBOLS, ABBREVIATIONS AND PATTERNS

STANDARD 000001-04

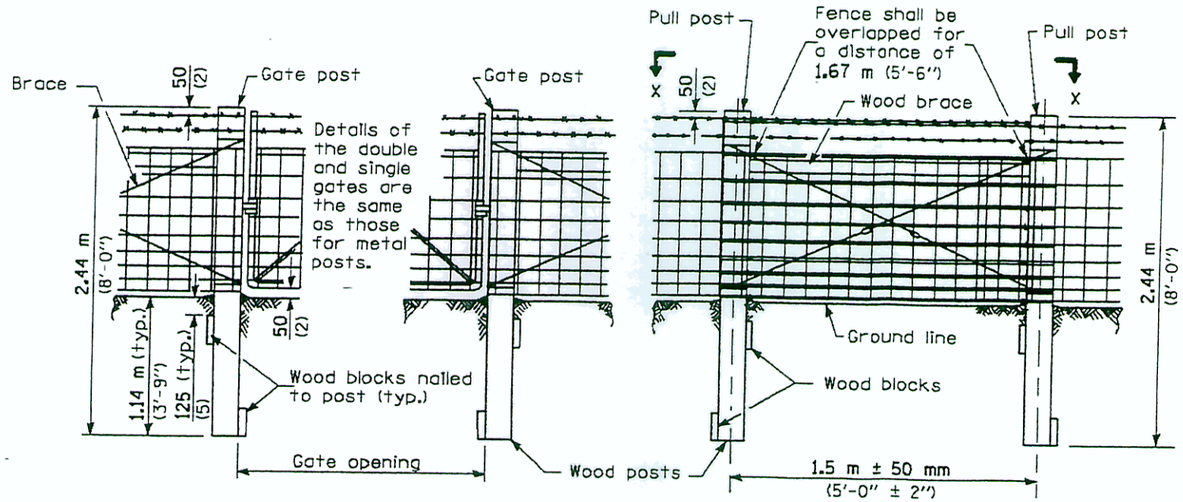

SINGLE OR DOUBLE GATE

PULL POST

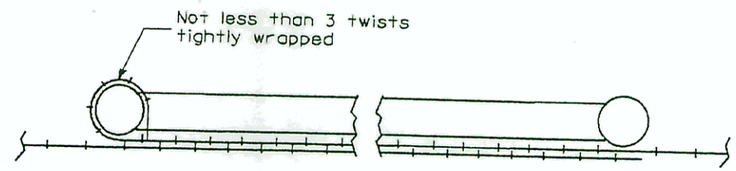

SECTION X-X

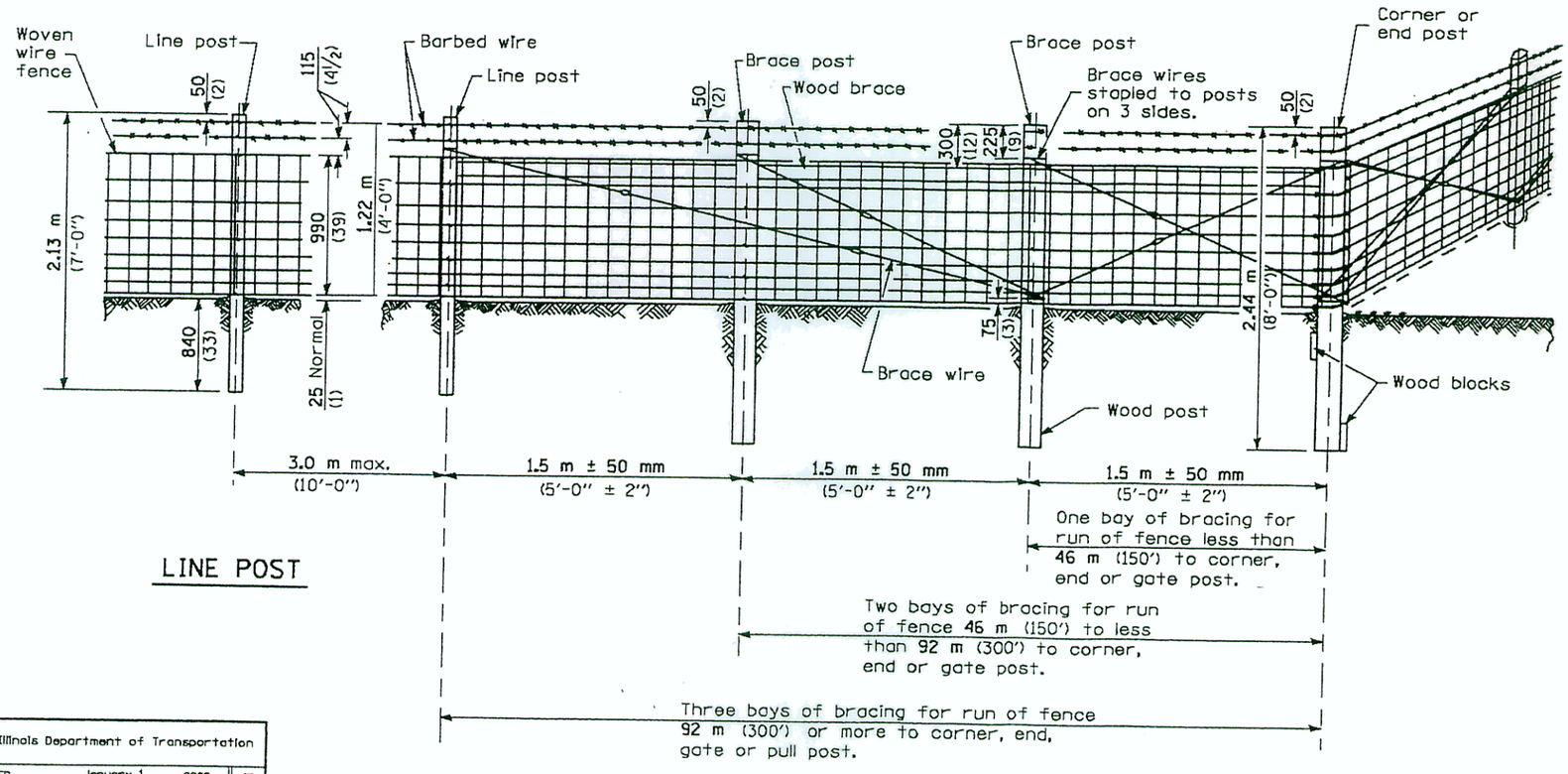

LINE POST

CORNER OR END POST

NOTES

Barbed wires shall be stapled to each post. Top and bottom wire of woven fence shall be stapled to each post. Staple every other wire between, alternating on successive posts.

Metal line posts may be used in lieu of wood line posts.

All dimensions are in millimeters (inches) unless otherwise shown.

Illinois Department of Transportation

PASSED January 1, 2002
ENGINEER OF POLICY AND PROCEDURES
APPROVED January 1, 2002
ENGINEER OF DESIGN AND ENVIRONMENT
ISSUED 1-1-97

WOVEN WIRE FENCE

(Sheet 2 of 4)

STANDARD 665001-01

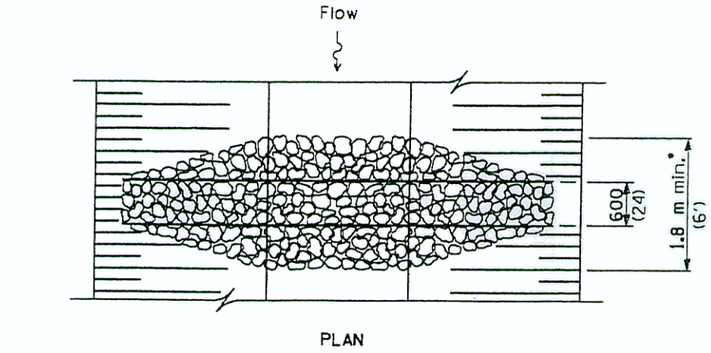

* When the ditch check is within the clear zone and the road is open to traffic, the traffic approach slope of the aggregate shall be 1:4 (V:H).

AGGREGATE DITCH CHECK

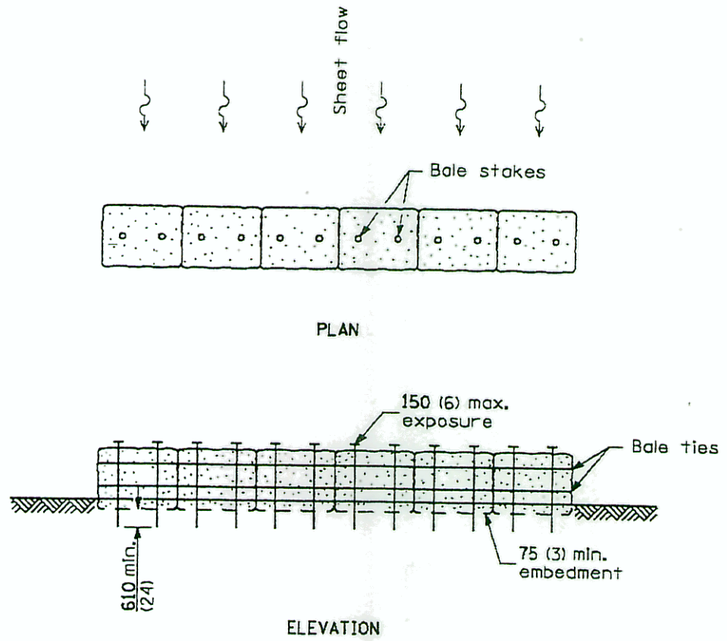

HAY OR STRAW BALES AS A PERIMETER EROSION BARRIER

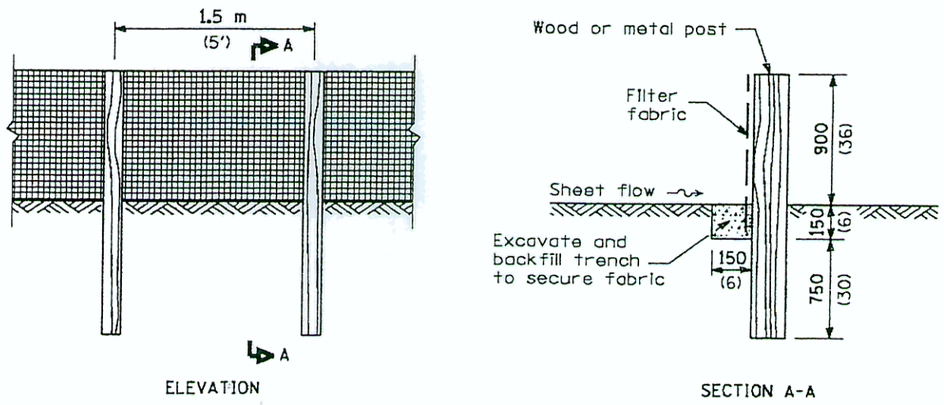

SILT FILTER FENCE AS A PERIMETER EROSION BARRIER

GENERAL NOTES

The installation details and dimensions shown for perimeter erosion barriers shall also apply for inlet and pipe protection.

All dimensions are in millimeters (inches) unless otherwise shown.

Illinois Department of Transportation

PASSED January 1, 2007
ENGINEER OF POLICY AND PROCEDURES
APPROVED January 1, 2007
ENGINEER OF DESIGN AND ENVIRONMENT

ISSUED 1-1-97

DATE	REVISIONS
1-1-07	Removed 2 ditch check details and added 1 for perim. erosion barrier.
1-1-02	Rev. ditch ck details & added perimeter erosion barrier detail.

TEMPORARY EROSION CONTROL SYSTEMS

(Sheet 1 of 2)

STANDARD 280001-03

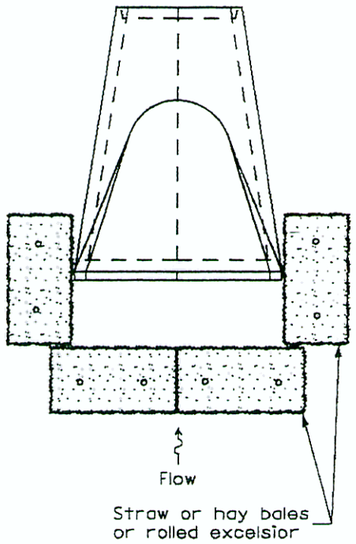

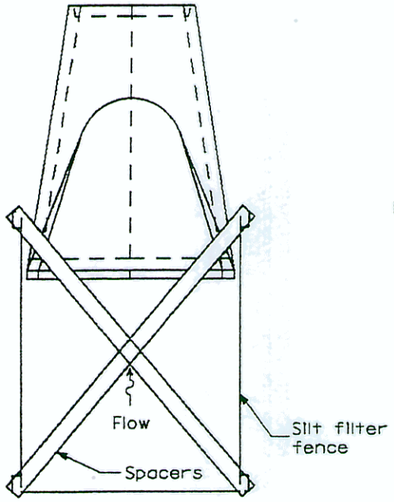

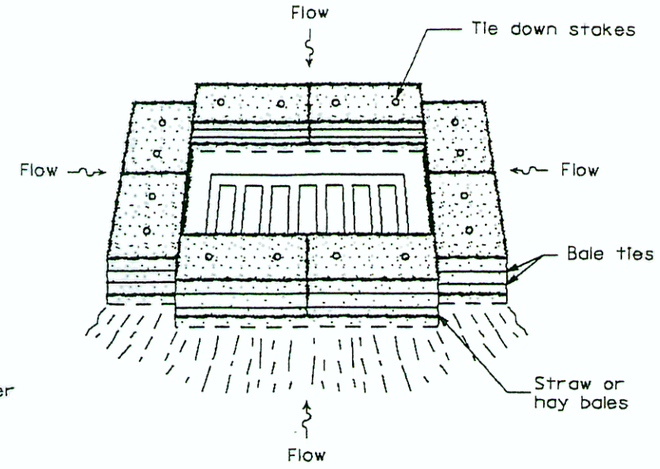

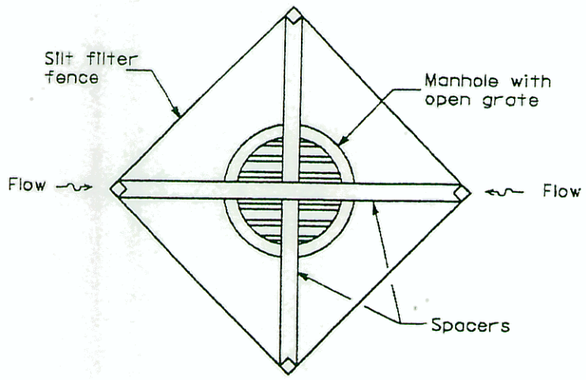

INLET AND PIPE PROTECTION

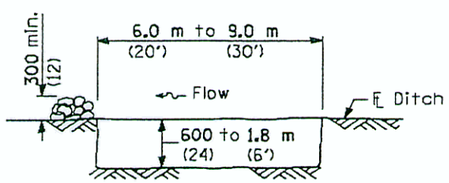

The performance of the basin will improve if put into a series.

ELEVATION

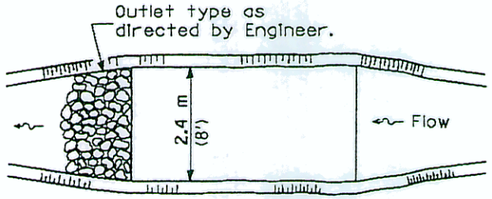

The long dimension should be parallel with the direction of the flow. Accumulated silt shall be removed anytime the basins become 75% filled.

PLAN

SEDIMENT BASIN

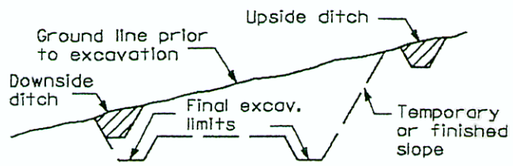

TYPICAL CUT CROSS SECTION

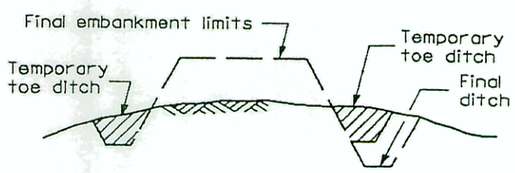

TYPICAL FILL CROSS SECTION

TEMPORARY DITCHES FOR CUT & FILL SECTIONS

Illinois Department of Transportation

PASSED January 1, 2007
ENGINEER OF POLICY AND PROCEDURES

APPROVED January 1, 2007
ENGINEER OF DESIGN AND ENVIRONMENT

ISSUED 1-1-07

TEMPORARY EROSION CONTROL SYSTEMS

(Sheet 2 of 2)

STANDARD 280001-03

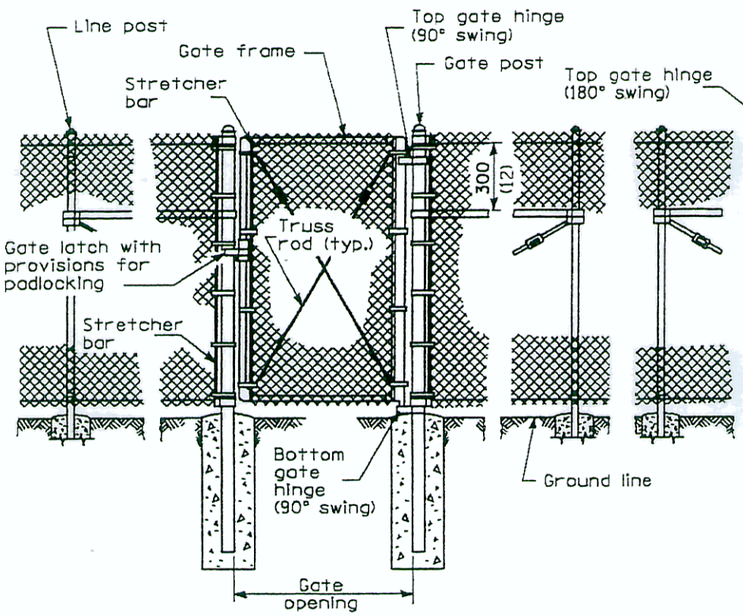

PEDESTRIAN GATE ARRANGEMENT

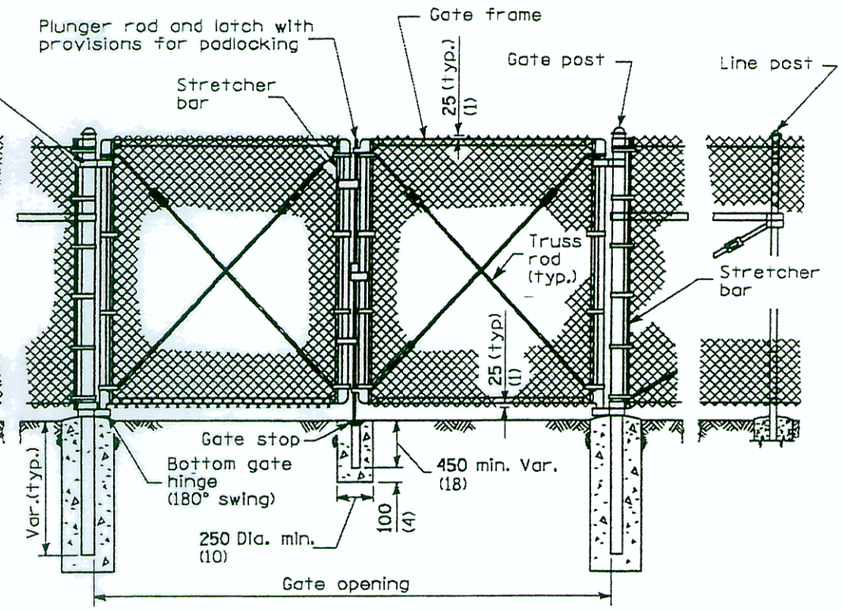

VEHICLE GATE ARRANGEMENT

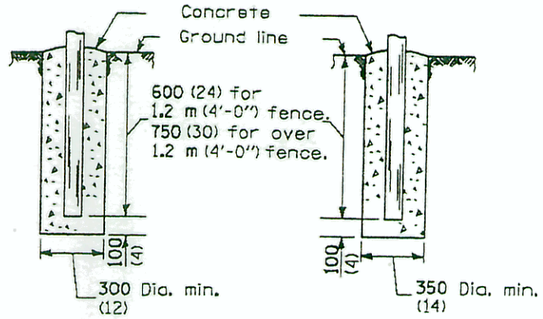

FOOTING FOR LINE POST

FOOTING FOR GATE & TERMINAL POST

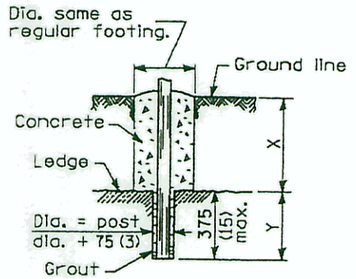

FOOTING FOR POST IN ROCK LEDGE

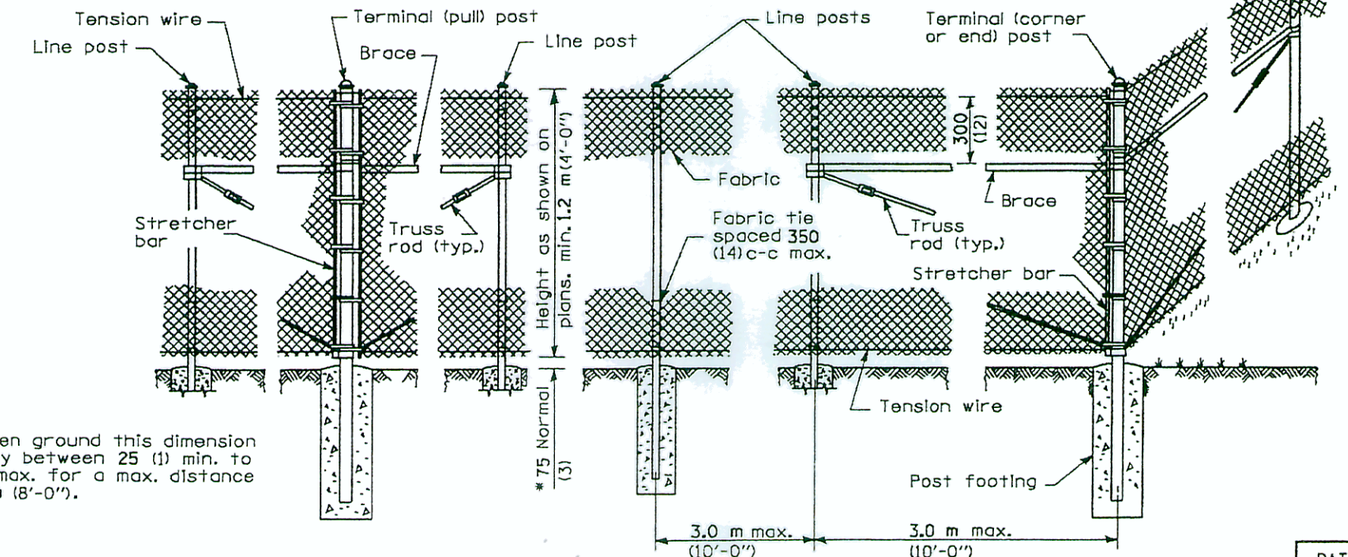

* On uneven ground this dimension may vary between 25 (1) min. to 125 (5) max. for a max. distance of 2.4 m (8'-0").

PULL POST ARRANGEMENT

LINE POST ARRANGEMENT

CORNER OR END POST ARRANGEMENT

GENERAL NOTES

Pull posts shall be placed at locations determined by the Engineer. They shall be placed at 200 m (660') intervals between posts to which the ends of the fabric are clamped or midway between such posts when the distance is less than 400 m (1320') and greater than 200 m (660').

X + Y shall not exceed 600 mm (24"), 750 mm (30") or 900 mm (36"), as applicable. When X is 0 (0) to 225 mm (9"), 380 mm (15"), or 525 mm (21"), Y= 375 mm (15"), and the post shall be shortened as required. When X exceeds 225 mm (9"), 380 mm (15"), or 525 mm (21"), Y shall be decreased correspondingly.

All dimensions are in millimeters (inches) unless otherwise shown.

Illinois Department of Transportation

PASSED January 1. 1999
ENGINEER OF POLICY AND PROCEDURES

APPROVED January 1. 1999
ENGINEER OF DESIGN AND ENVIRONMENT

ISSUED 1-1-97

DATE	REVISIONS
1-1-99	Rev. "pans" to "plans" in LINE POST ARRANGEMENT.
1-1-97	Renum. Standard 2168-12. Rev. top and bottom selvage type.

CHAIN LINK FENCE

(Sheet 1 of 3)

STANDARD 664001-01

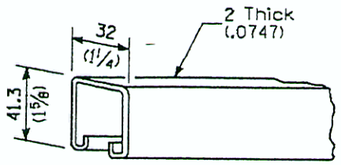

ROLL FORMED
SECTION OF BRACE

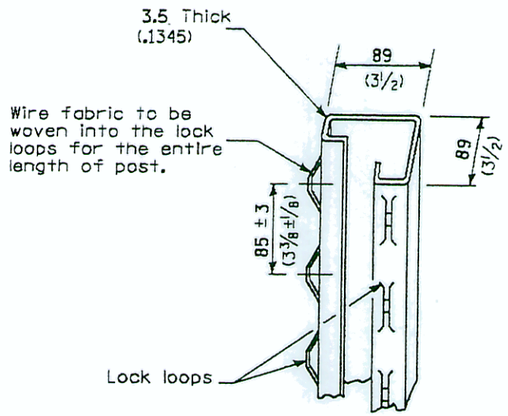

ROLL FORMED SECTION OF
TERMINAL & GATE POST

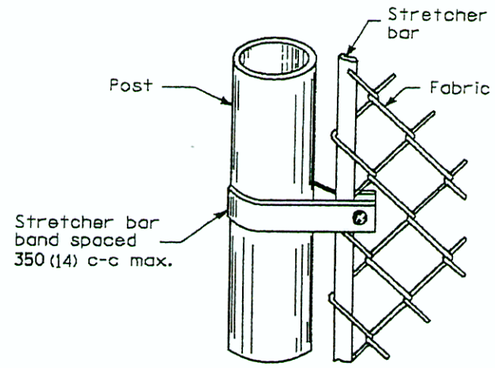

METHOD OF FASTENING
STRETCHER BAR TO POST

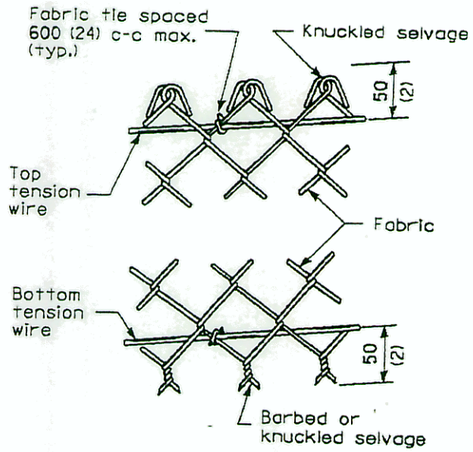

METHOD OF TYING
FABRIC TO TENSION WIRES

LINE POST	
Section	kg/m (lbs./ft.)
Pipe Type A 48.3 O.D. (1.90)	4.05 (2.72)
Pipe Type B 48.3 O.D. (1.90)	3.39 (2.28)
Pipe Type C 48.3 O.D. (1.90)	3.36 (2.26)
H 47.6x41.3 (1.875x1.625)	4.05 (2.72)
⊏	2.38 (1.60)
I	3.42 (2.30)

TERMINAL POST	
Section	kg/m (lbs./ft.)
Pipe Type A 60.3 O.D. (2.375)	5.43 (3.65)
Pipe Type B 60.3 O.D. (2.375)	4.63 (3.11)
Pipe Type C 60.3 O.D. (2.375)	4.60 (3.09)
Roll Formed 89.0x89.0 (3½x3½)	See detail
Sq. Tubing 63.5x63.5 (2½x2½)	6.43 (4.32)

HORIZONTAL BRACES	
Section	kg/m (lbs./ft.)
Pipe Type A 42.2 O.D. (1.66)	3.38 (2.27)
Pipe Type B 42.2 O.D. (1.66)	2.72 (1.83)
Pipe Type C 42.2 O.D. (1.66)	2.71 (1.82)
H 33.3x38.1 (1.31x1.5)	3.35 (2.25)
Roll Formed 41.3x31.8 (1⅝x1¼)	See detail

GATE FRAMES	
Section	kg/m (lbs./ft.)
Pipe Type A 42.2 O.D. (1.66)	3.38 (2.27)
Pipe Type B 42.2 O.D. (1.66)	2.72 (1.83)
Pipe Type C 42.2 O.D. (1.66)	2.71 (1.82)

GATE POSTS *							
Gate Opening * m (ft.)		Pipe Type A		Sq. Tubing		Pipe Type B	
Single	Double	Size (O.D.)	kg/m (lbs./ft.)	Size	kg/m (lbs./ft.)	Size (O.D.)	kg/m (lbs./ft.)
Up to 1.2 (4)	Up to 2.5 (8)	60.3 (2.375)	5.43 (3.65)	63.5 (2½)	6.43 (4.32)	60.3 (2.375)	4.63 (3.11)
Over 1.2 to 2.5 (4) (8)	Over 2.5 to 5.0 (8) (16)	73.0 (2.875)	8.62 (5.79)	76.2 (3)	8.60 (5.78)	73.0 (2.875)	6.91 (4.64)
Over 2.5 to 3.6 (8) (12)	Over 5.0 to 7.4 (16) (24)	89.0 (3.5)	11.28 (7.58)	76.2 (3)	13.10 (8.80)	89.0 (3.5)	8.49 (5.707)

* The 89.0 x 89.0 (3½ x 3½) roll formed section as detailed may be used as gate posts for single gate up to 1.8 m (6') and double gate up to 3.6 m (12').

Illinois Department of Transportation

PASSED January 1. 1999
ENGINEER OF POLICY AND PROCEDURES
APPROVED January 1. 1999
ENGINEER OF DESIGN AND ENVIRONMENT

ISSUED 1-1-97

All dimensions are in millimeters (inches) unless otherwise shown.

CHAIN LINK FENCE

(Sheet 2 of 3)

STANDARD 664001-01

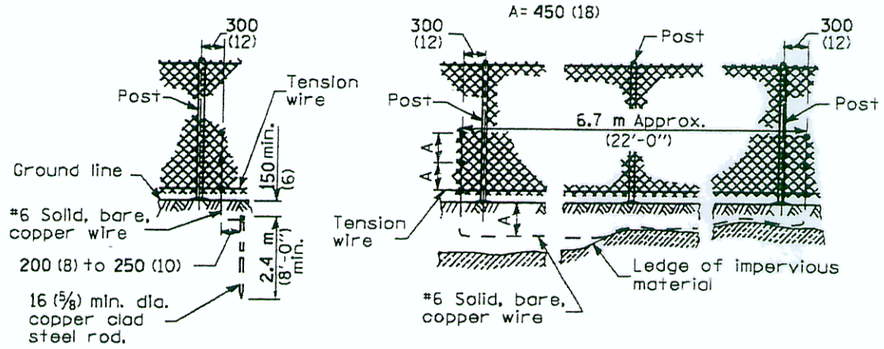

STANDARD GROUND

COUNTERPOISE GROUND (ALTERNATE)

PROTECTIVE ELECTRICAL GROUNDS

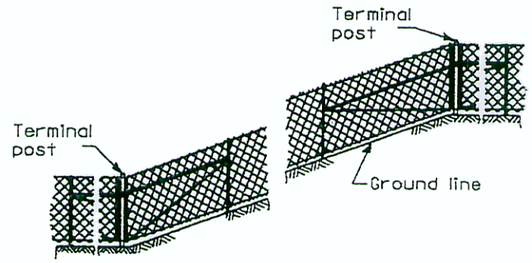

INSTALLATION ON SLOPES

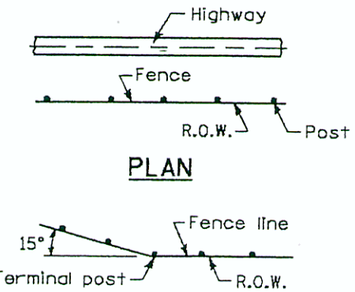

When fence line has a change in direction of 15° or more, a terminal post shall be placed as shown above.

Where angle is less than 15° and existing conditions require a terminal post, they shall be placed as directed by the Engineer.

INSTALLATION AT CORNERS

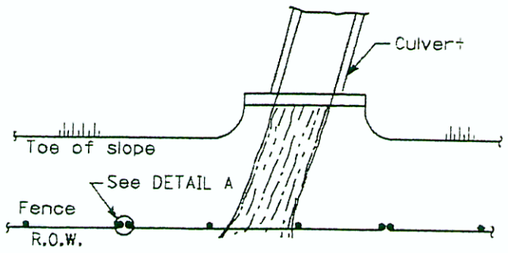

PLAN
AT STREAM CROSSING

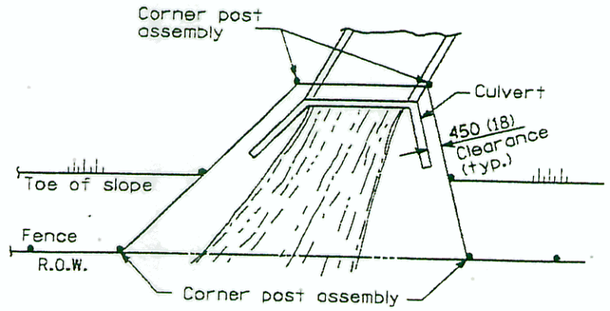

PLAN
AT HEADWALL

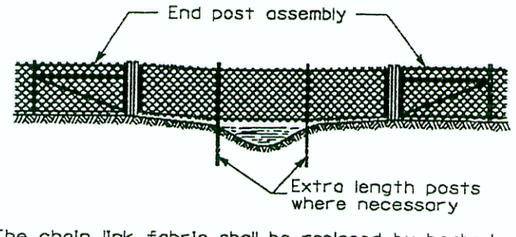

The chain link fabric shall be replaced by barbed wire strands at 300 (12) maximum centers between the double posts shown on DETAIL A when shown on the plans.

ELEVATION
INSTALLATION OVER STREAM

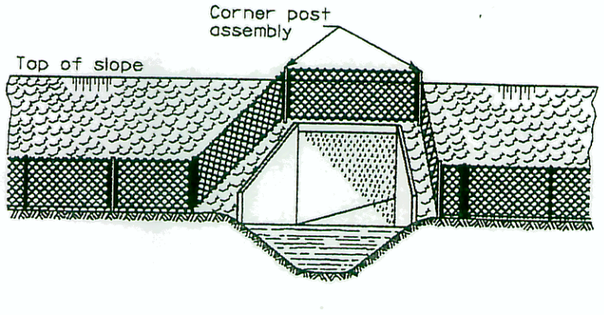

When the width of the culvert makes it necessary to anchor a post to the top of the culvert, a cast iron shoe or other device approved by the Engineer shall be used.

ELEVATION
INSTALLATION AROUND HEADWALL

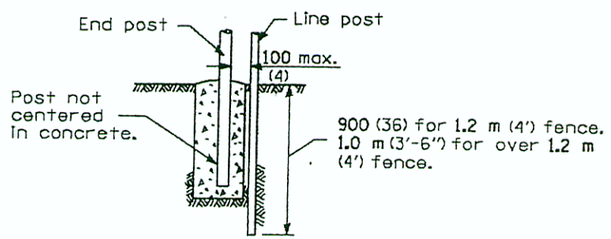

DETAIL A

All dimensions are in millimeters (inches) unless otherwise shown.

Illinois Department of Transportation

PASSED January 1, 1999
ENGINEER OF POLICY AND PROCEDURES
APPROVED January 1, 1999
ENGINEER OF DESIGN AND ENVIRONMENT
ISSUED 1-1-97

CHAIN LINK FENCE

(Sheet 3 of 3)

STANDARD 664001-01

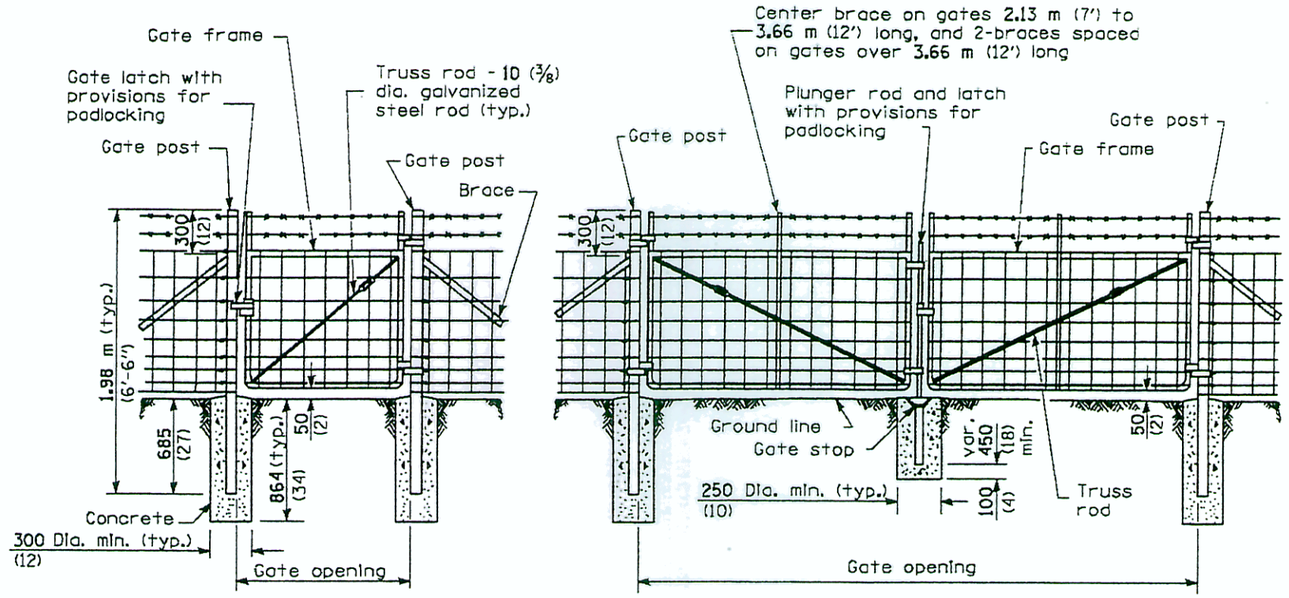

SINGLE GATE

DOUBLE GATE

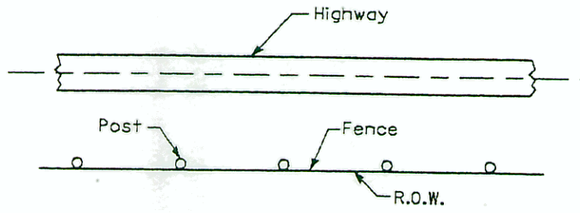

PLAN

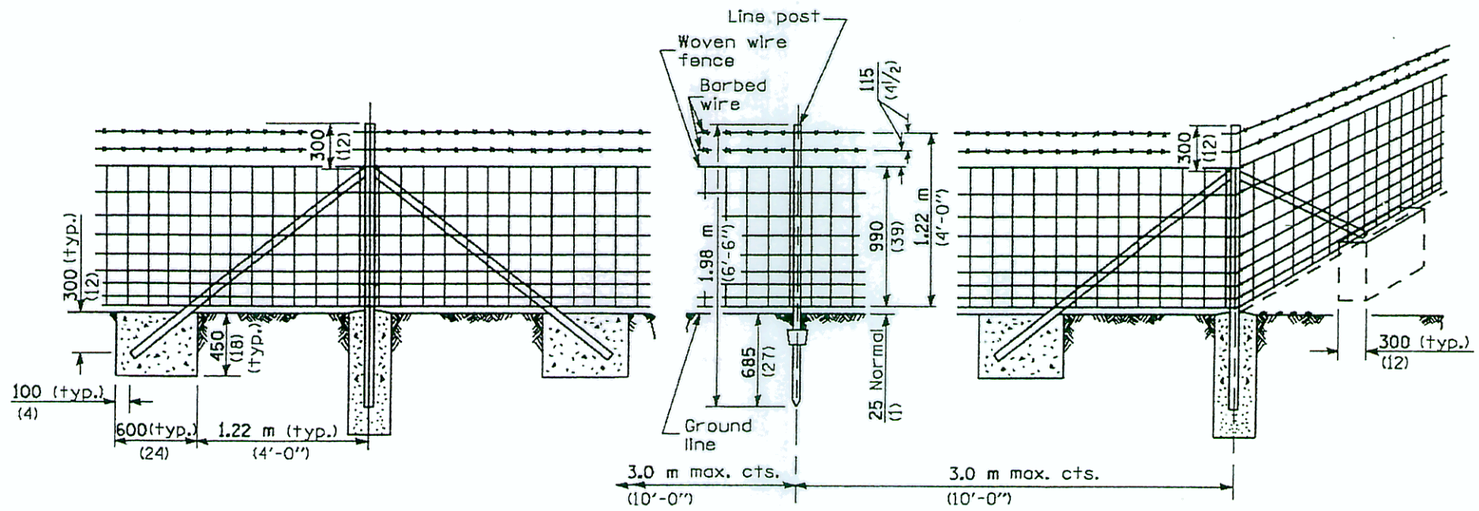

PULL POST

LINE POST

CORNER OR END POST

NOTES

Barbed wires shall be tied to each post. Top and bottom wire of woven fence shall be tied to each post. Tie every other wire between, alternating on successive posts.

Barbed wires and line wires of woven fence shall be be fastened to the corner, end, pull, and gate posts by wrapping the wires around the post and tying back on itself with not less than 3 twists tightly wrapped.

GENERAL NOTES

Pull posts shall be placed at the locations determined by the Engineer. They shall be placed at 200 m (660') intervals between posts to which the ends of the fabric and barbed wires are fastened or midway between such posts when the distance is less than 400 m (1320') and greater than 200 m (660').

Bracing for gate posts shall be the same type used for end posts.

The clearance between the bottom fence wire and the ground may be up to 75 mm (3") for a maximum distance of 2.4 m (8') when uneven ground is encountered.

All dimensions are in millimeters (inches) unless otherwise shown.

Illinois Department of Transportation

PASSED January 1, 2002
ENGINEER OF POLICY AND PROCEDURES
APPROVED January 1, 2002
ENGINEER OF DESIGN AND ENVIRONMENT

ISSUED 1-1-97

DATE	REVISIONS
1-1-02	Corrected dimensions on sheet 3 and 4.
1-1-97	Renum. Standard 2169-8. Deleted DN Symbol.

WOVEN WIRE FENCE

(Sheet 1 of 4)

STANDARD 665001-01

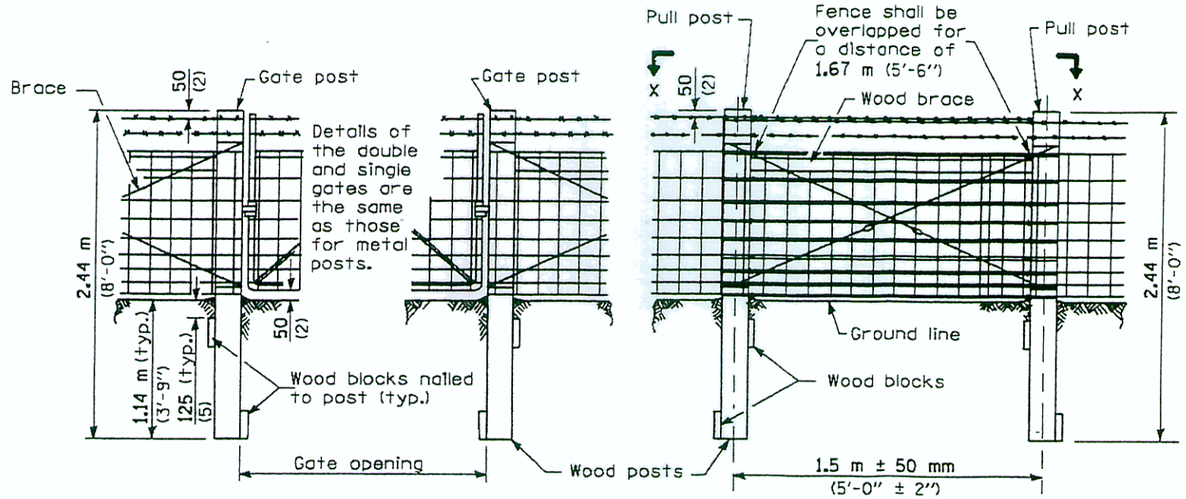

SINGLE OR DOUBLE GATE

PULL POST

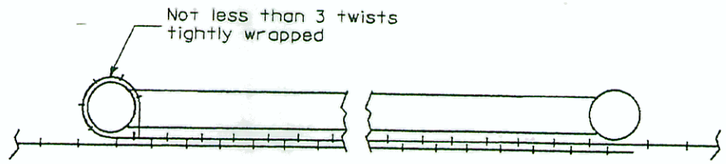

SECTION X-X

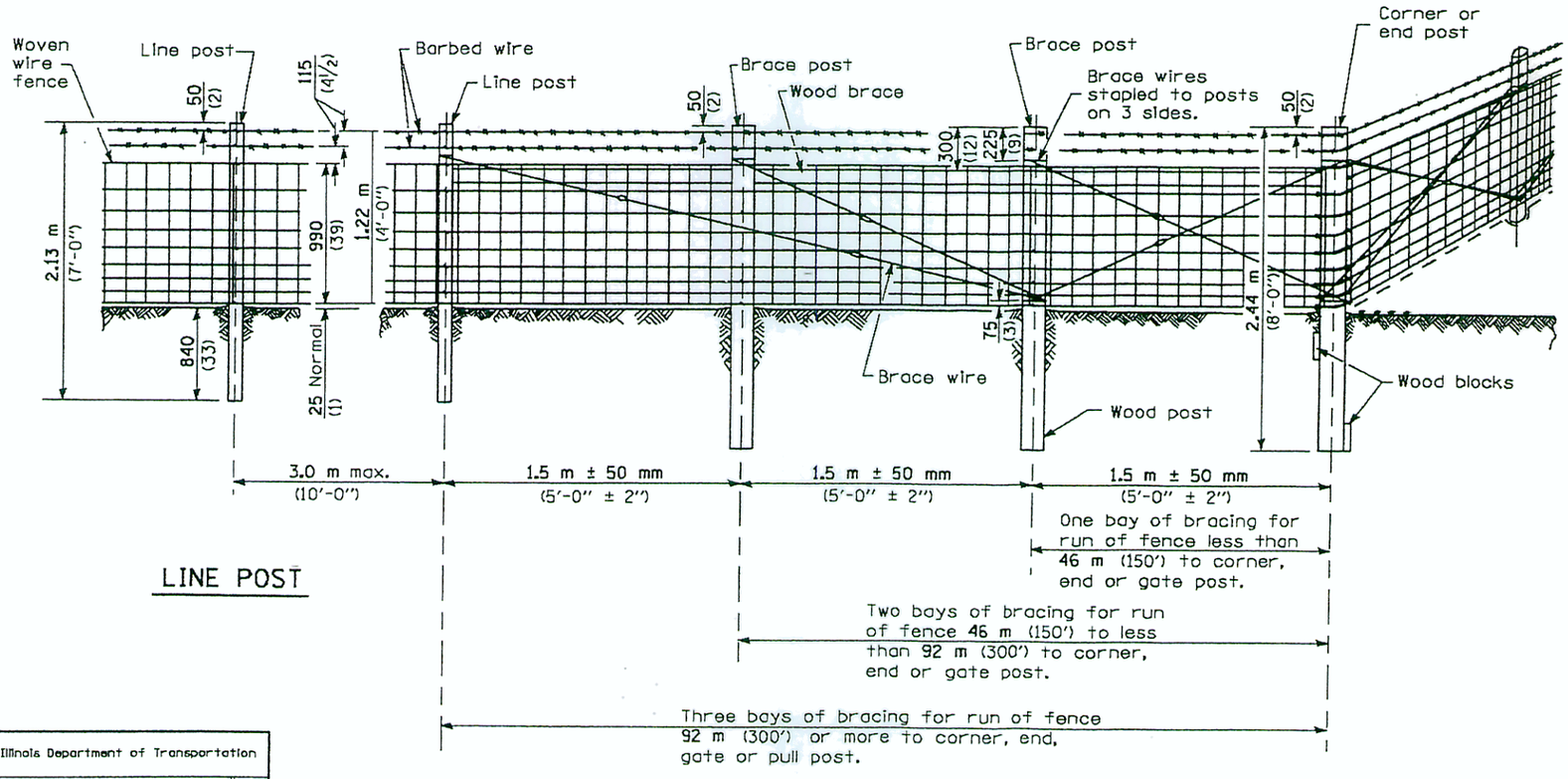

LINE POST

CORNER OR END POST

NOTES

Barbed wires shall be stapled to each post. Top and bottom wire of woven fence shall be stapled to each post. Staple every other wire between, alternating on successive posts.

Metal line posts may be used in lieu of wood line posts.

All dimensions are in millimeters (inches) unless otherwise shown.

Illinois Department of Transportation

PASSED January 1, 2002
ENGINEER OF POLICY AND PROCEDURES
APPROVED January 1, 2002
ENGINEER OF DESIGN AND ENVIRONMENT

ISSUED 1-1-97

WOVEN WIRE FENCE

(Sheet 2 of 4)

STANDARD 665001-01

METAL ITEMS

GATE FRAMES		CORNER, END or PULL POSTS		LINE POSTS		BRACES	
Section	kg/m (lbs./ft.)	Section	kg/m (lbs./ft.)	Section	kg/m (lbs./ft.)	Section	kg/m (lbs./ft.)
Type A: Pipe 42.2 (1.66) O.D.	3.38 (2.27)	Type A: Pipe 60.3 (2.375) O.D.	5.43 (3.65)	Type A: Pipe 33.4 (1.315) O.D.	2.50 (1.68)	Type A: Pipe 42.2 (1.66) O.D.	3.38 (2.27)
Type B: Pipe 42.2 (1.66) O.D.	2.72 (1.83)	Type B: Pipe 60.3 (2.375) O.D.	4.63 (3.11)	Type B: Pipe 33.4 (1.315) O.D.	1.99 (1.34)	Type B: Pipe 42.2 (1.66) O.D.	2.72 (1.83)
Type C: Pipe 42.2 (1.66) O.D.	2.71 (1.82)	Type C: Pipe 60.3 (2.375) O.D.	4.60 (3.09)	Type C: Pipe 33.4 (1.315) O.D.	1.98 (1.33)	Type C: Pipe 42.2 (1.66) O.D.	2.71 (1.82)
		Tubing 63.5 (2.5) Sq.	6.43 (4.32)	Tubing 25.4 (1) Sq.	2.10 (1.41)		
		Angle 64x64x6.4 ($2\frac{1}{2}$x$2\frac{1}{2}$x$\frac{1}{4}$)	6.10 (4.1)	Ang.		Angle 64x64x6.4 ($2\frac{1}{2}$x$2\frac{1}{2}$x$\frac{1}{4}$)	4.75 (3.19)
		H, I, U, structural shapes	6.10 (4.1) min.	L, C, T, U, Y or other approved structural shapes	1.98 (1.33) min.	or other approved structural shapes	4.61 (3.1) min.

METAL ITEMS

GATE POSTS

Single gate up to 1.22 m (4 ft.) Double gate up to 2.44 m (8 ft.)		over 1.22 m to 2.44 m (4 ft. to 8 ft.) over 2.44 m to 4.88 m (8 ft. to 16 ft.)		over 2.44 m to 3.66 m (8 ft. to 12 ft.) over 4.88 m to 7.32 m (16 ft. to 24 ft.)	
Section	kg/m (lbs./ft.)	Section	kg/m (lbs./ft.)	Section	kg/m (lbs./ft.)
Type A: Pipe 60.3 (2.375) O.D.	5.43 (3.65)	73.0 (2.875) O.D.	8.62 (5.79)	88.9 (3.500) O.D.	11.28 (7.58)
Type B: Pipe 60.3 (2.375) O.D.	4.63 (3.11)	73.0 (2.875) O.D.	6.91 (4.64)		
Type C: Pipe 60.3 (2.375) O.D.	4.60 (3.09)	73.0 (2.875) O.D.	5.63 (3.78)		
Tubing 63.5 (2.5) Sq.	6.43 (4.32)	76.2 (3) Sq.	8.60 (5.78)	76.2 (3) Sq.	31.10 (8.80)
Angle 64x64x6.4 ($2\frac{1}{2}$x$2\frac{1}{2}$x$\frac{1}{4}$)	6.10 (4.1)	76x76x7.9 (3x3x$\frac{5}{16}$)	9.08 (6.1)	76x76x9.5 ($3\frac{1}{2}$x$3\frac{1}{2}$x$\frac{3}{8}$)	10.70 (8.5)
H, I, U, structural shapes	6.10 (4.1) min.		9.08 (6.1) min.		10.70 (8.5) min.

WOOD ITEMS

(S4S or Rough Sawn)

GATE, CORNER, END or PULL POSTS	BRACES and LINE POSTS	BLOCKS
150 to 175 (6 to 7) Top dia. 150x150 (6x6)	100 to 125 (4 to 5) Top dia. 100x100 (4x4)	50x200x450 (2x8x18)

All dimensions are in millimeters (inches) unless otherwise shown.

Illinois Department of Transportation

PASSED January 1, 2002
ENGINEER OF POLICY AND PROCEDURES
APPROVED January 1, 2002
ENGINEER OF DESIGN AND ENVIRONMENT

ISSUED 1-1-97

WOVEN WIRE FENCE

(Sheet 3 of 4)

STANDARD 665001-01

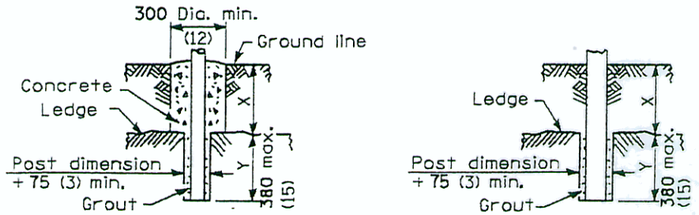

METAL POST **WOOD POST**

NOTE

X + Y shall not exceed 685 (27), 840 (33), or 1.14 m (3'-9") as applicable. When X is 0 to 300 (12), 450 (18), or 760 (30), Y= 380 (15), and the post shall be shortened as required. When X exceeds 300 (12), 450 (18), or 760 (30), Y shall be decreased correspondingly.

FOOTING FOR POSTS WHEN ROCK LEDGE IS ENCOUNTERED

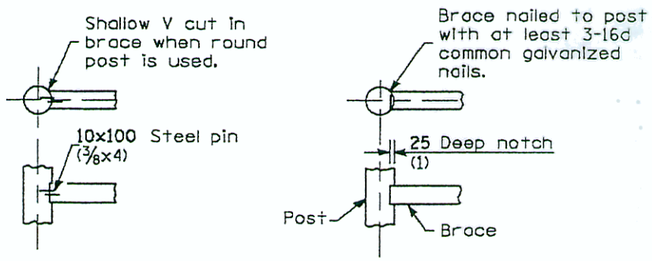

ALTERNATE DETAILS FOR FASTENING WOOD BRACE TO WOOD POST

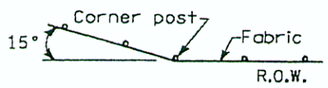

NOTE

Where fence line has a change in direction of 15° of more, a corner post with bracing as required shall be placed as shown above. Where angle is less than 15° and existing conditions require a corner post, they shall be placed as directed by the Engineer.

INSTALLATION AT CORNERS

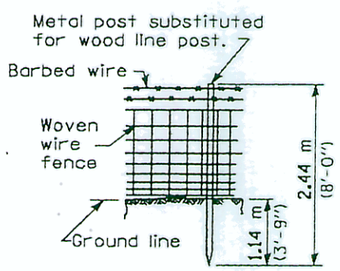

PROTECTIVE ELECTRICAL GROUNDING FOR WOOD POST FENCE INSTALLATION

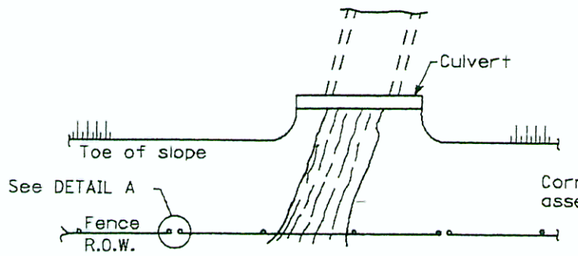

PLAN AT STREAM CROSSING

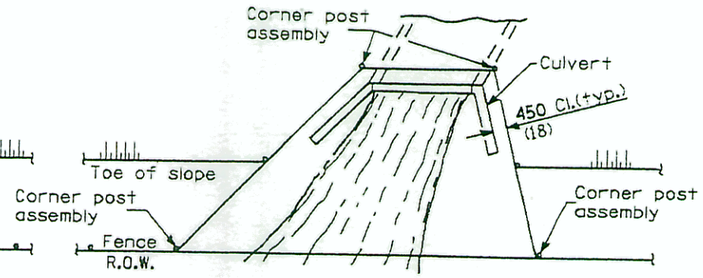

PLAN AT HEADWALL

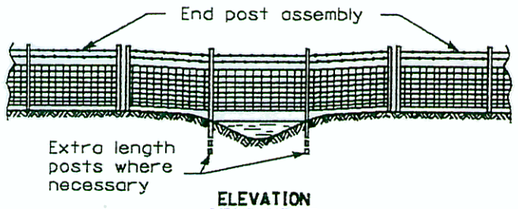

ELEVATION

NOTE

The woven wire fabric shall be replaced by barbed wire strands at 300 (12) maximum centers between the double posts shown on DETAIL A when shown on the plans.

INSTALLATION OVER STREAM

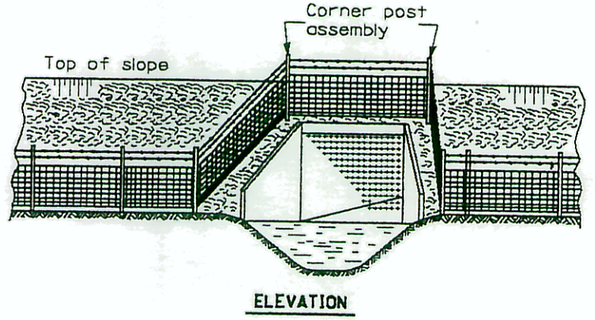

ELEVATION

NOTE

When the width of the culvert makes it necessary to anchor a post to the top of the culvert, a cast iron shoe or other device approved by the Engineer shall be used.

INSTALLATION AROUND HEADWALL

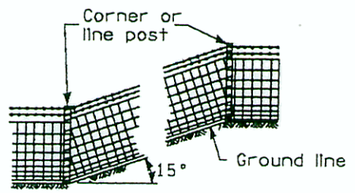

NOTE

Where grade line has a change in slope of 15° or more, a corner post with bracing as required shall be placed as shown above. Where angle is less than 15° line posts may be used.

When the tension of the fence tends to pull the posts from the ground, the line posts shall be anchored with the applicable concrete or wood anchorage specified for corner posts.

INSTALLATION ON SLOPES

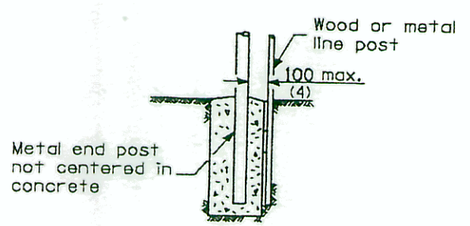

DETAIL A

All dimensions are in millimeters (inches) unless otherwise shown.

Illinois Department of Transportation

PASSED January 1, 2002
ENGINEER OF POLICY AND PROCEDURES
APPROVED January 1, 2002
ENGINEER OF DESIGN AND ENVIRONMENT
ISSUED 1-1-97

WOVEN WIRE FENCE

(Sheet 4 of 4)

STANDARD 665001-01

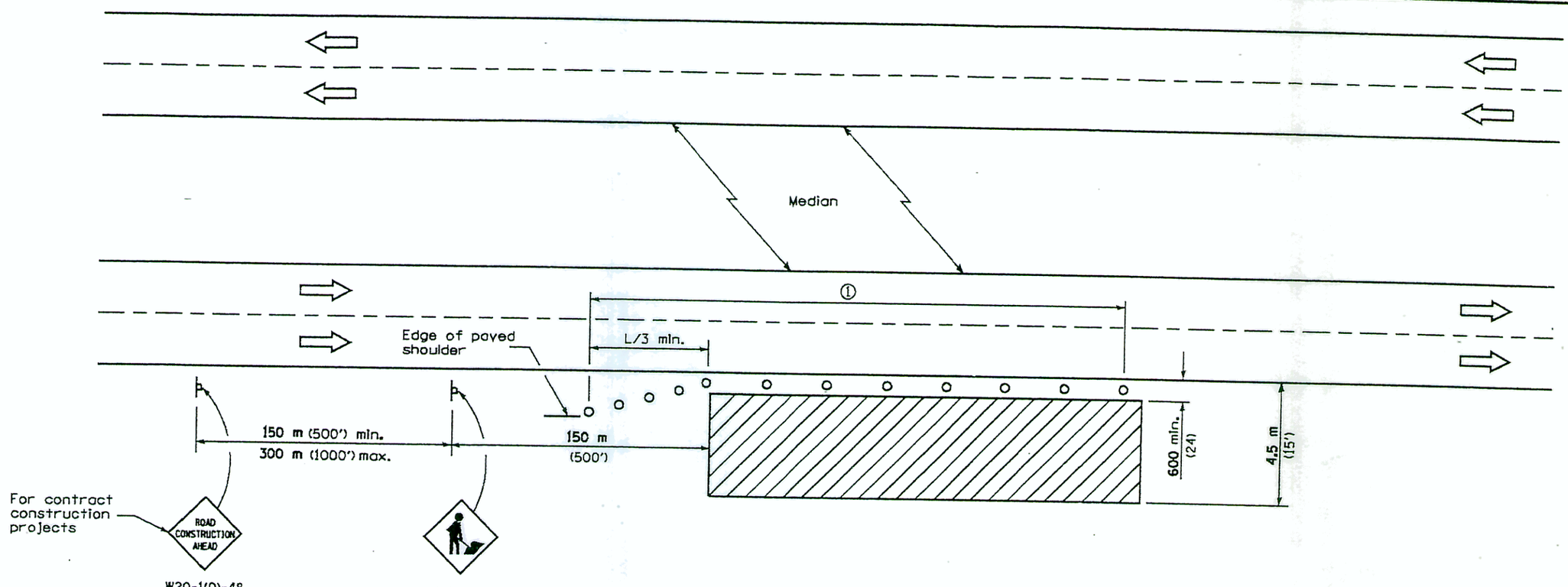

For contract construction projects

W20-1(0)-48

W21-1a(0)-48

Or

For maintenance and utility projects



W21-4(0)-48



W21-1110(0)-48

TYPICAL APPLICATIONS

Utility operations
Culvert extensions
Side slope changes
Guardrail installation and maintenance
Delineator installation
Landscaping operations
Shoulder repair
Sign installation and maintenance

SYMBOLS

Work area

Sign

Cone, drum or barricade

① When the work operation exceeds one hour, cones, drums or barricades shall be placed at 8 m (25') centers for L/3 distance, and at 15 m (50') centers through the remainder of the work area.

GENERAL NOTES

This Standard is used where any vehicles, equipment, workers or their activities will encroach in the area 4.5 m (15') to 600 (24) from the edge of pavement.

Calculate L as follows:

SPEED LIMIT	FORMULAS	
	Metric	(English)
70 km/h (40 mph) or less:	$L = \frac{WS^2}{150}$	$L = \frac{WS^2}{60}$
80 km/h (45 mph) or greater:	L=0.65(W)(S)	L=(W)(S)

W = Width of offset in meters (feet).

S = Normal posted speed km/h (mph).

All dimensions are in millimeters (inches) unless otherwise shown.

Illinois Department of Transportation

APPROVED January 1, 2005
ENGINEER OF OPERATIONS

APPROVED January 1, 2005
ENGINEER OF DESIGN AND ENVIRONMENT

ISSUED 1-1-97

DATE	REVISIONS
1-1-05	Revised title, notes.
	and sign spacing.
1-1-97	Renum. Standard 2314-9.
	Deleted orange flags.

OFF-RD OPERATIONS, MULTILANE, 4.5 m (15') TO 600 mm (24") FROM PAVEMENT EDGE

STANDARD 701101-01

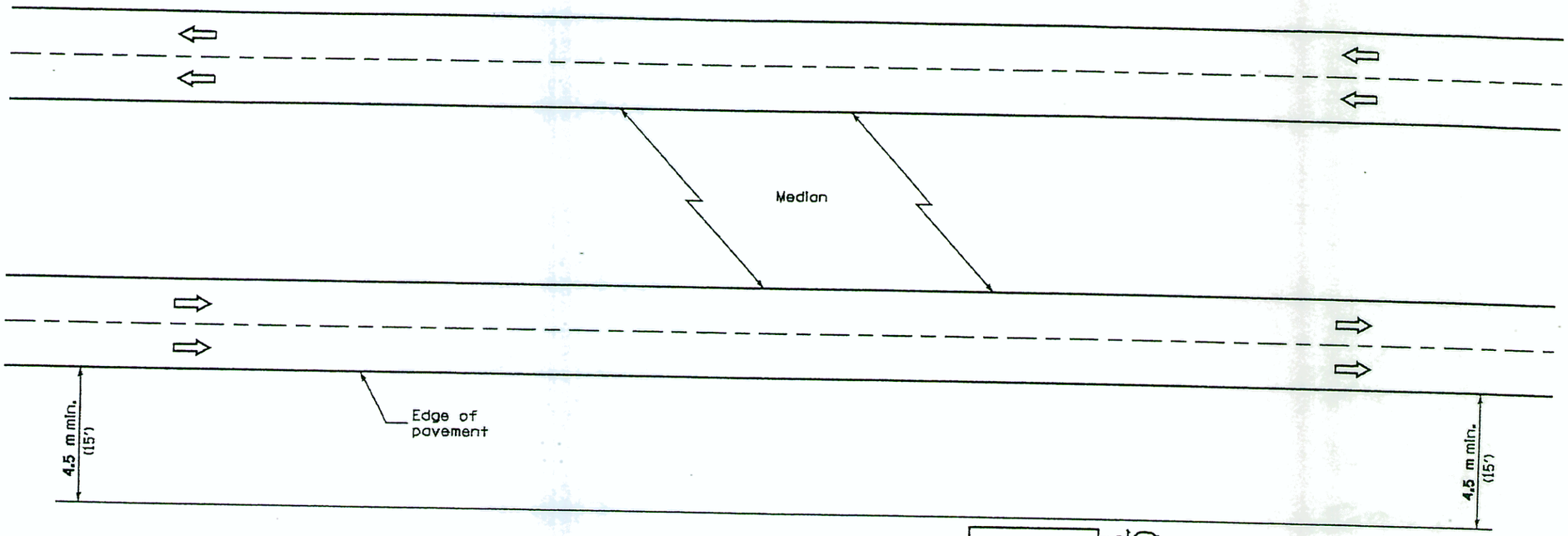

TYPICAL APPLICATIONS

Landscaping work
Utility work
Fencing contracts

GENERAL NOTES

This Standard is used where at all times all vehicles, equipment, workers or their activities are more than 4.5 m (15') from the edge of pavement.

When the work operation requires that two or more work vehicles cross the 4.5 m (15') clear zone in any one hour, traffic control shall be according to Standard 701101.

This Standard also applies to work performed in the median more than 4.5 m (15') from either pavement.

All dimensions are in millimeters (inches) unless otherwise shown.

Illinois Department of Transportation

APPROVED January 1, 2005
ENGINEER OF OPERATIONS

APPROVED January 1, 2005
ENGINEER OF DESIGN AND ENVIRONMENT

ISSUED 1-1-97

DATE	REVISIONS
1-1-05	Revised title.
1-1-97	Renum. Standard 2313-6.

OFF-RD OPERATIONS, MULTILANE, MORE THAN 4.5 m (15') AWAY

STANDARD 701106-01

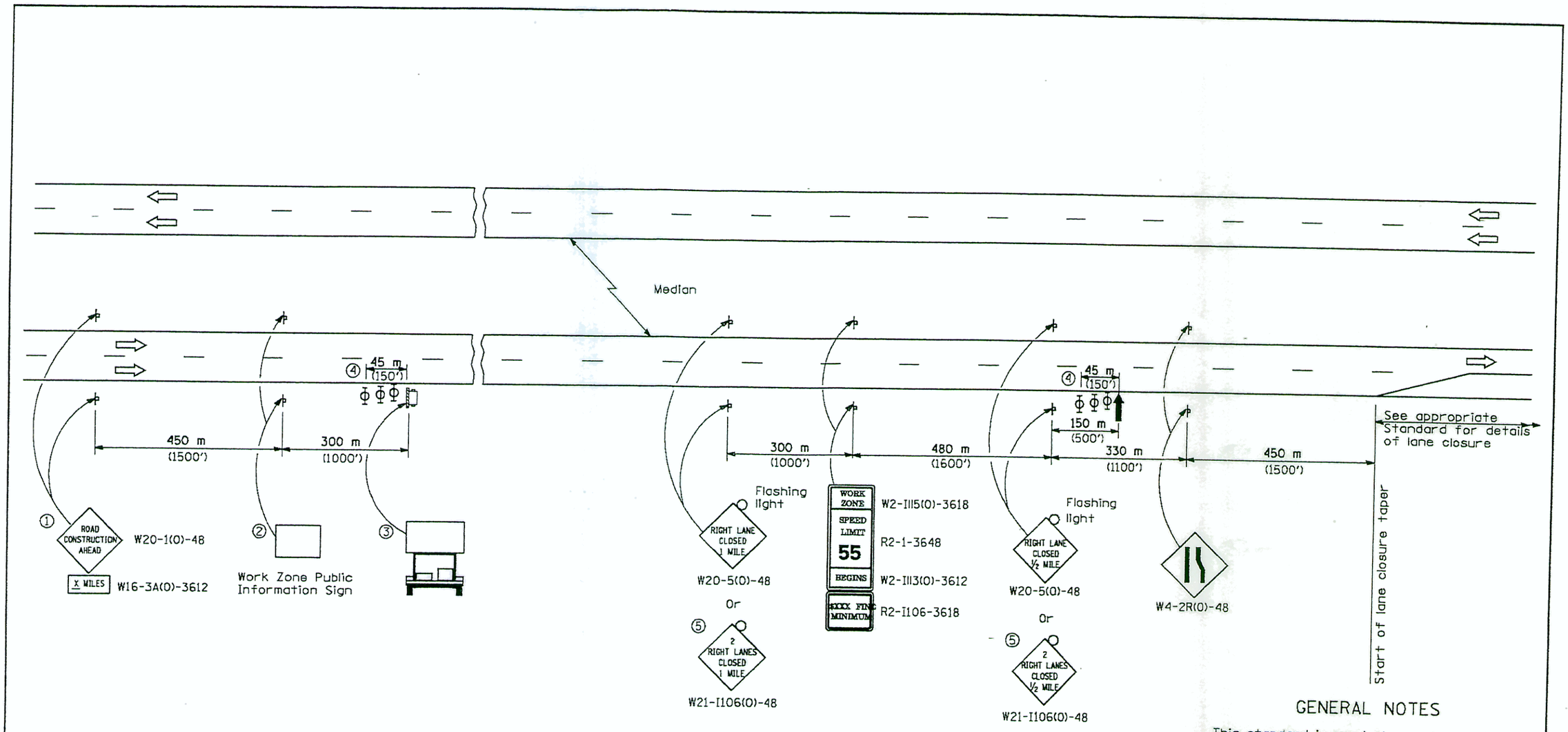

SYMBOLS

- Arrow board
- Portable changeable message sign
- Sign
- Type II barricade, drum, or vertical barricade with monodirectional flashing light

① The Road Construction Ahead sign shall be located 3 to 5 miles in advance of the project limits.

② The message and size of the Work Zone Public Information Sign shall be as specified by the Department.

③ The message board shall be used to display status of lanes within the project. The primary messages shall be:
"Right Lane Closed" / " x Miles Ahead"
"Left Lane Closed" / " x Miles Ahead"
"All Lanes Open"

④ Three, Type II barricades, drums, or vertical barricades at 15 m (50') centers.

⑤ This sign shall be used when 2 lanes are closed.

GENERAL NOTES

This standard is used where at any time a lane is closed on a freeway/expressway. When the left lane is closed, LEFT LANE CLOSED signs shall be substituted for the RIGHT LANE CLOSED signs.

The first two signs and the message board are stationary.

The last four signs and arrowboard shall be moved as necessary to maintain the required distance from the start of the lane closure taper(s).

All dimensions are in millimeters (inches) unless otherwise shown.

Illinois Department of Transportation

APPROVED January 1, 2005
ENGINEER OF OPERATIONS

APPROVED January 1, 2005
ENGINEER OF DESIGN AND ENVIRONMENT

ISSUED 4-1-04

DATE	REVISIONS
1-1-05	Added signs for
	2 lane closures.
4-15-04	Deleted a note.

APPROACH TO LANE CLOSURE, FREEWAY/EXPRESSWAY

STANDARD 701400-02

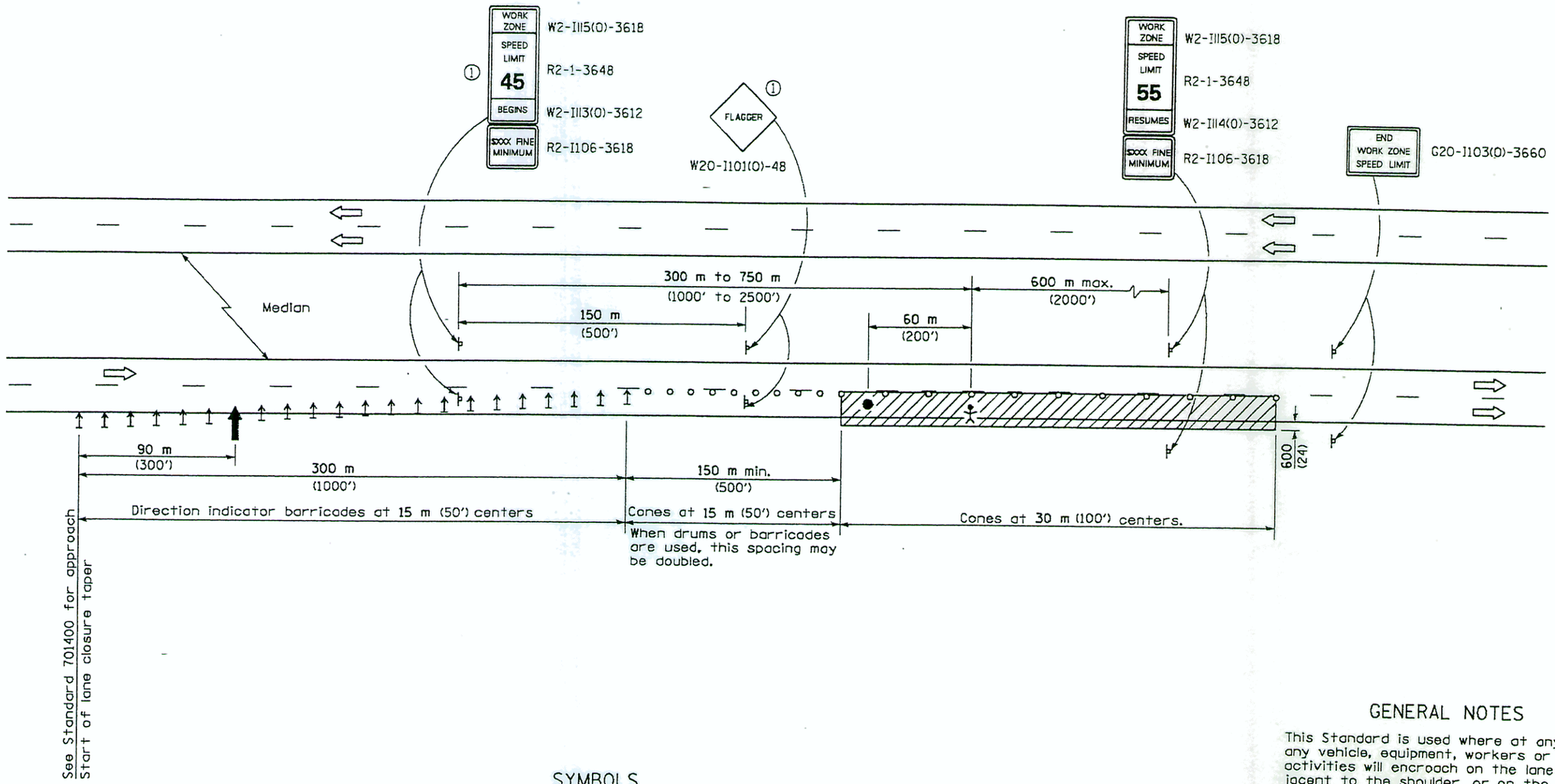

TYPICAL APPLICATIONS

Pavement patch

Utility operations

Bituminous resurfacing

SYMBOLS

- Arrow board
- Work area
- Worker
- Sign
- Direction indicator barricade
- Cone, drum or barricade
- Flagger with traffic control sign

① Work zone speed limit signs and FLAGGER signs shall be moved as necessary to maintain the required spacing between the signs and the workers in each separate work activity.

GENERAL NOTES

This Standard is used where at any time, any vehicle, equipment, workers or their activities will encroach on the lane adjacent to the shoulder, or on the shoulder within 600 mm (24") of the edge of pavement for day light operation.

This Standard must always be used in combination with Standard 701400.

This Standard also applies when work is being performed in the left lane. Under these conditions, the set up would be a mirror image to what is shown.

All dimensions are in millimeters (inches) unless otherwise shown.

Illinois Department of Transportation

APPROVED April 15, 2004
ENGINEER OF OPERATIONS

APPROVED April 15, 2004
ENGINEER OF DESIGN AND ENVIRONMENT

ISSUED 1-1-97

DATE	REVISIONS
4-15-04	Revised signs.
4-1-04	Revised to provide
	consistency on freeway/
	expressway closures.

LANE CLOSURE, FREEWAY/EXPRESSWAY, DAY OPERATIONS ONLY

STANDARD 701406-04

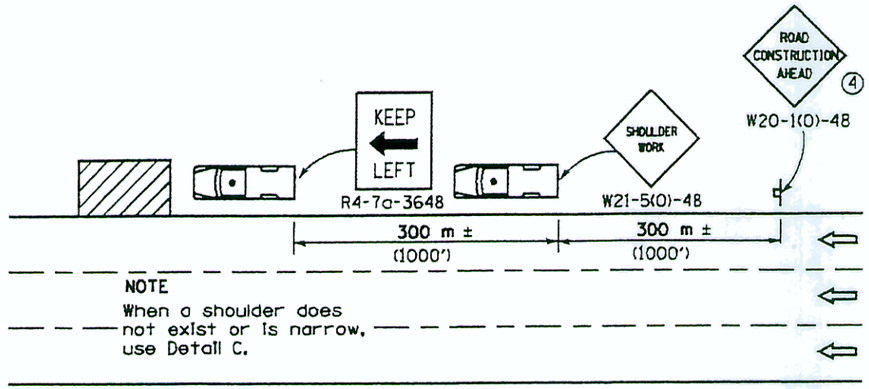

DETAIL A

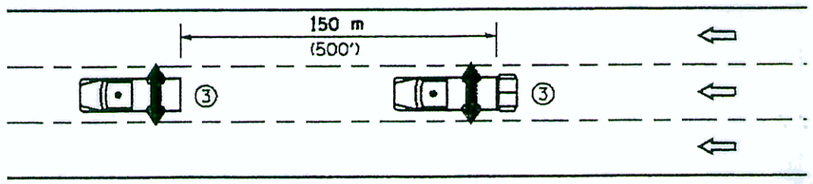

DETAIL B

(① Pavement marking operations of an interior lane only)

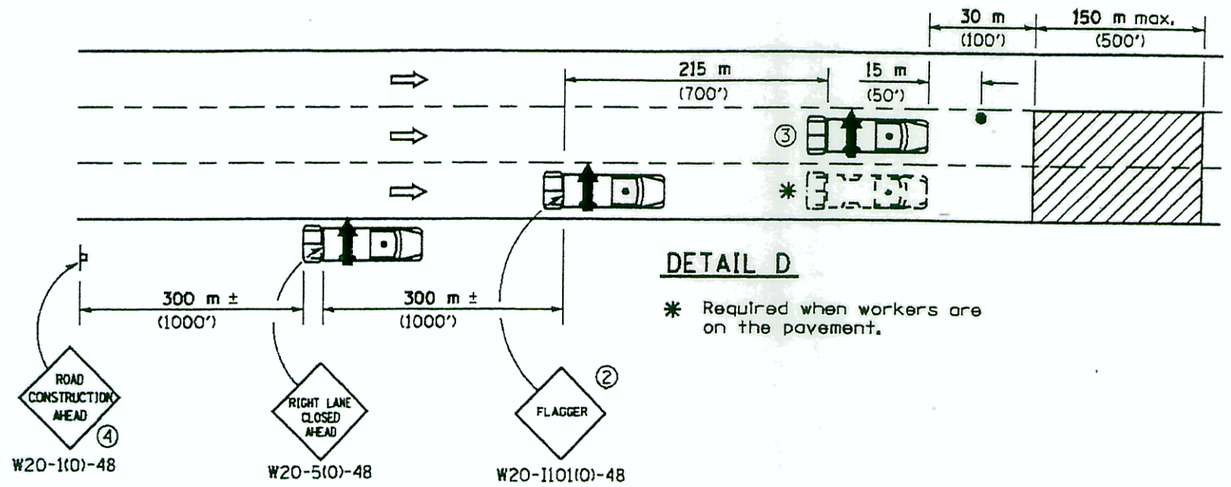

DETAIL D

* Required when workers are on the pavement.



G20-1101-2430
(appropriate arrow)
③ (when striping only)

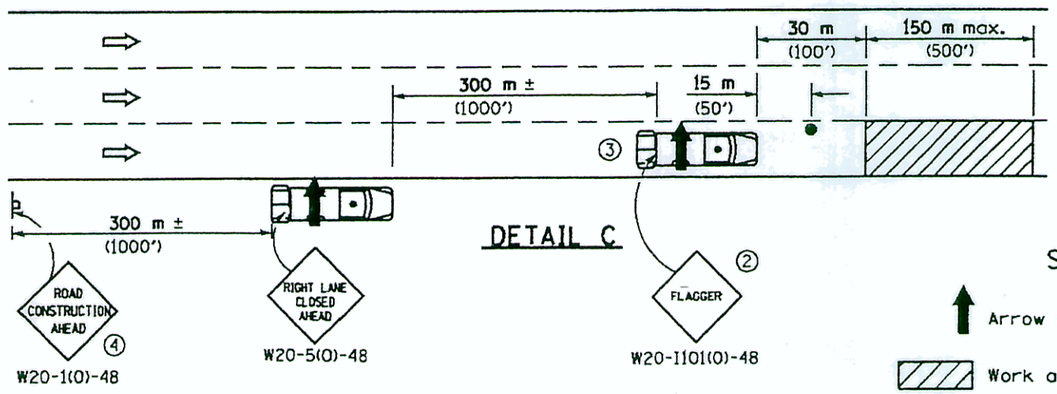

DETAIL C

SYMBOLS

- Arrow board
- Work area
- Truck with flashing amber light
- Truck mounted attenuator
- Flagger with traffic control sign

TYPICAL APPLICATIONS

- Landscaping work
- Utility work
- Pavement marking
- Weed spraying
- Roadometer measurements
- Debris cleanup
- Crack pouring

GENERAL NOTES

This Standard is used where any vehicle, equipment, workers or their activities will require: 1) stationary operations up to 1 hour, or 2) a continuous or intermittent moving operation where the average speed of movement is greater than 2 km/h (1 mph).

This Standard is also applicable when work is being performed in the left lane(s) or on the median shoulder. Under these conditions, KEEP RIGHT signs shall be substituted for KEEP LEFT signs and arrow board indications shall be directed to the right.

① DETAIL B shall be used only for pavement marking operations where workers are not present on the pavement. For other operations involving an interior lane, use DETAIL D.

② Flaggers are required when workers are on the pavement.

③ For striping operations only. See sign arrow detail on this standard.

④ For operations which are on the roadway or shoulder, greater than 15 minutes and up to 1 hour.

All dimensions are in millimeters (inches) unless otherwise shown.

Illinois Department of Transportation

APPROVED January 1, 2005
ENGINEER OF OPERATIONS

APPROVED January 1, 2005
Michael J. Hine
ENGINEER OF DESIGN AND ENVIRONMENT

ISSUED 1-1-97

DATE	REVISIONS
1-1-05	Revised Detail A
	and deleted FLAGGER
	SYMBOL sign.
1-1-00	Rev. SHOULDER WORK AHEAD
	sign. Added prov. for
	temp. stationary oper.

LANE CLOSURE, MULTILANE, INTERMITTENT OR MOVING OPER., FOR SPEEDS ≥ 45 MPH

STANDARD 701426-02

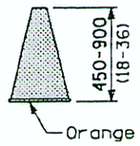

CONE

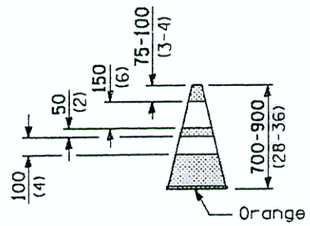

REFLECTORIZED CONE

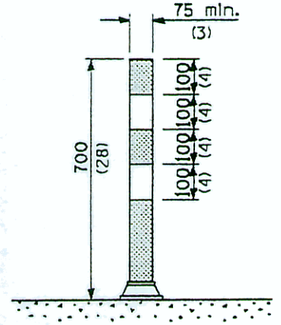

FLEXIBLE DELINEATOR

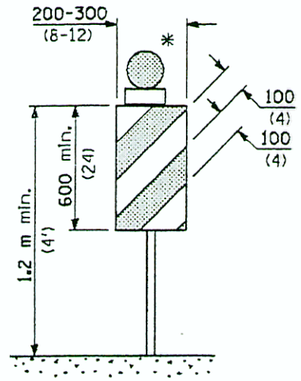

VERTICAL PANEL

POST MOUNTED

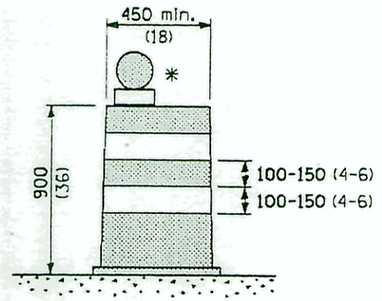

DRUM

TYPE I BARRICADE

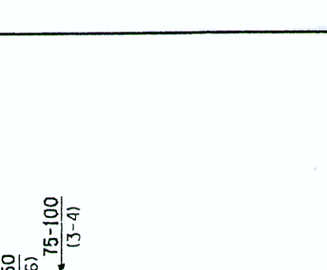

TYPE II BARRICADE

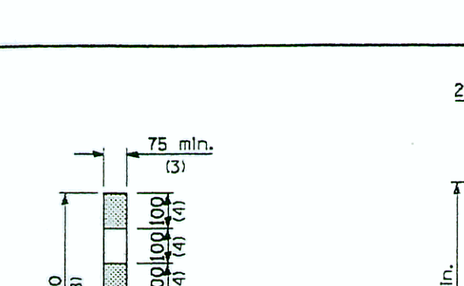

TYPE III BARRICADE

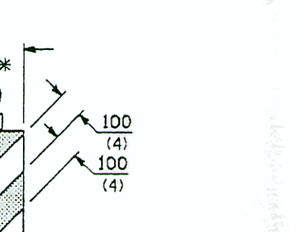

DIRECTION INDICATOR BARRICADE

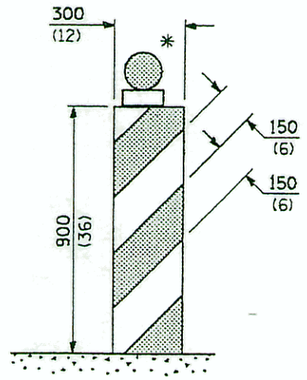

VERTICAL BARRICADE

* Warning lights (If required)

GENERAL NOTES

All heights shown shall be measured above the pavement surface.

All dimensions are in millimeters (inches) unless otherwise shown.

Illinois Department of Transportation

APPROVED April 1, 2006
ENGINEER OF OPERATIONS

APPROVED April 1, 2006
ENGINEER OF DESIGN AND ENVIRONMENT

ISSUED 1-1-97

DATE	REVISIONS
4-1-06	Revised vert. barricade,
	post mounted signs, and
	signs on temp. supports.
1-1-05	Added note to work limit
	signing and re-added
	Type I barricade.

TRAFFIC CONTROL DEVICES

(Sheet 1 of 3)

STANDARD 702001-06

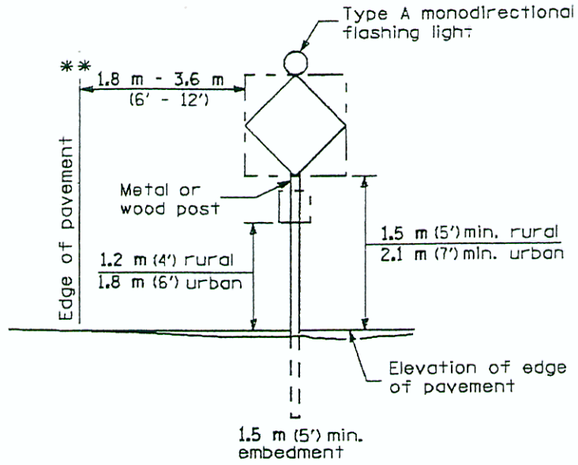

POST MOUNTED SIGNS

** When curb or paved shoulder are present this dimension shall be 600 (24) to the face of curb or 1.8 m (6') to the outside edge of the paved shoulder.

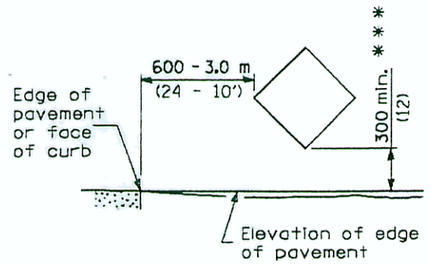

SIGNS ON TEMPORARY SUPPORTS

*** When work operations exceed four days, this dimension shall be 1.5 m (5') min.

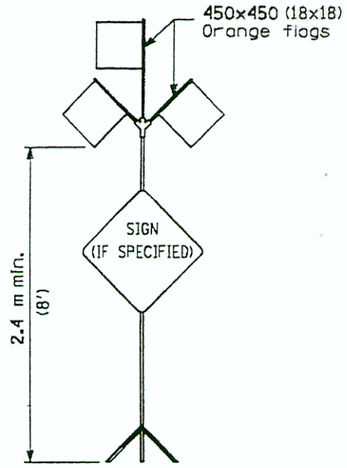

HIGH LEVEL WARNING DEVICE

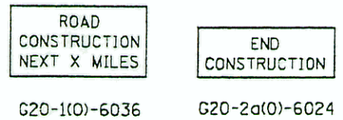

This signing is required for all projects 3200 m (2 miles) or more in length.

ROAD CONSTRUCTION NEXT X MILES sign shall be placed 150 m (500') in advance of project limits.

END CONSTRUCTION sign shall be erected at the end of the job unless another job is within 3200 m (2 miles).

Dual sign displays shall be utilized on multi-lane highways.

WORK LIMIT SIGNING

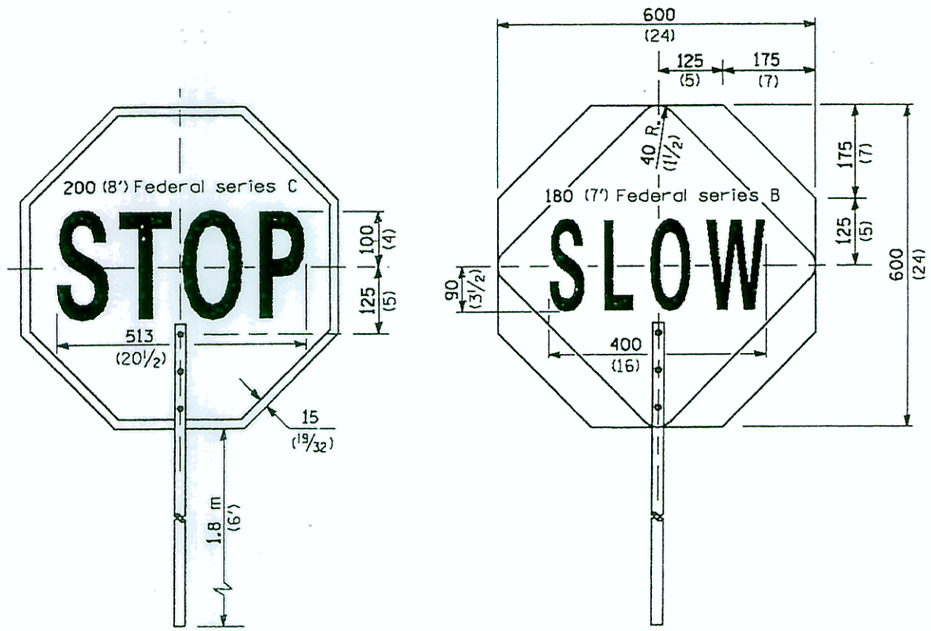

FRONT SIDE

REVERSE SIDE

FLAGGER TRAFFIC CONTROL SIGN

All dimensions are in millimeters (inches) unless otherwise shown.

Illinois Department of Transportation

APPROVED April 1, 2006
ENGINEER OF OPERATIONS

APPROVED April 1, 2006
ENGINEER OF DESIGN AND ENVIRONMENT

ISSUED 1-1-97

TRAFFIC CONTROL DEVICES

(Sheet 2 of 3)

STANDARD 702001-06

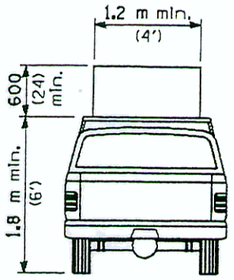

TYPE A
ROOF
MOUNTED

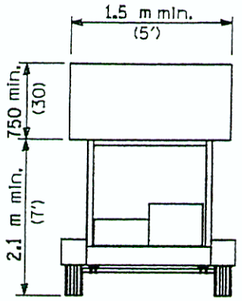

TYPE B
ROOF OR TRAILER
MOUNTED

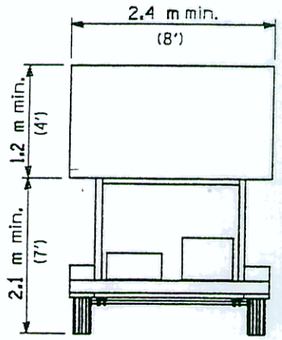

TYPE C
TRAILER
MOUNTED

ARROW BOARDS

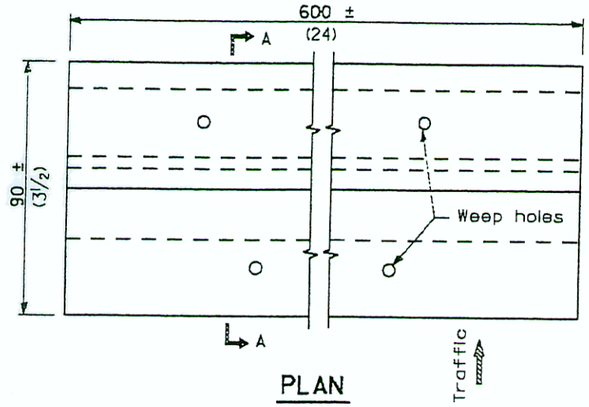

PLAN

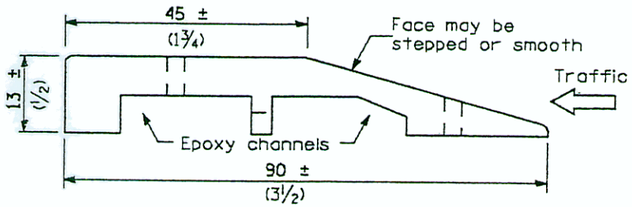

SECTION A-A

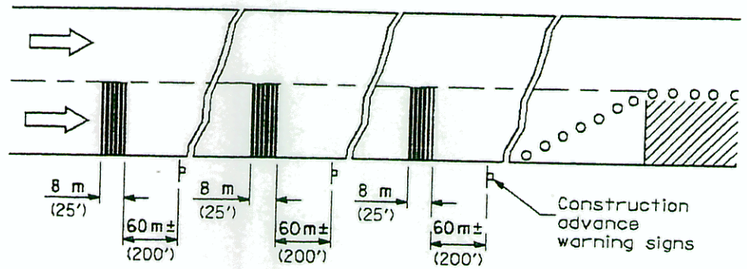

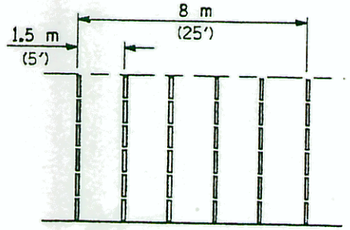

TYPICAL INSTALLATION

TEMPORARY RUMBLE STRIPS

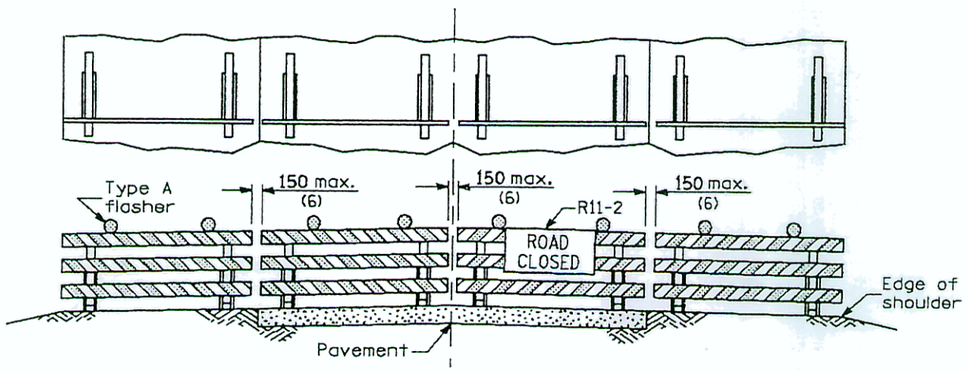

ROAD CLOSED TO ALL TRAFFIC

Reflectorized striping may be omitted on the back side of the barricades. If a Type III barricade with an attached sign panel which meets NCHRP 350 is not available, the sign may be mounted on an NCHRP 350 temporary sign support directly in front of the barricade.

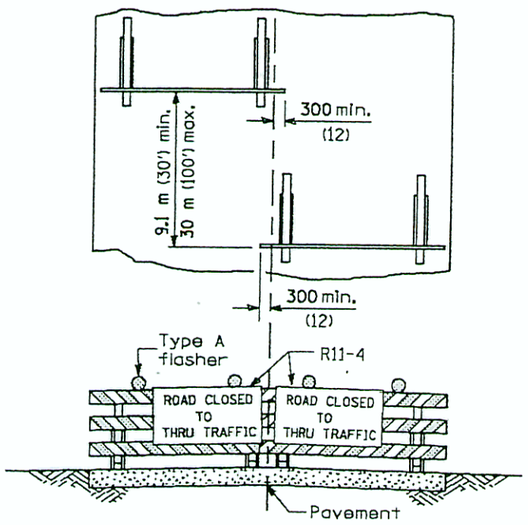

ROAD CLOSED TO THRU TRAFFIC

Reflectorized striping shall appear on both sides of the barricades. If a Type III barricade with an attached sign panel which meets NCHRP 350 is not available, the signs may be mounted on NCHRP 350 temporary sign supports directly in front of the barricade.

All dimensions are in millimeters (inches) unless otherwise shown.

Illinois Department of Transportation

APPROVED April 1, 2005
ENGINEER OF OPERATIONS

APPROVED April 1, 2005
ENGINEER OF DESIGN AND ENVIRONMENT

ISSUED 1-1-97

TYPICAL APPLICATIONS OF
TYPE III BARRICADES CLOSING A ROAD

TRAFFIC CONTROL DEVICES

(Sheet 3 of 3)

STANDARD 702001-06

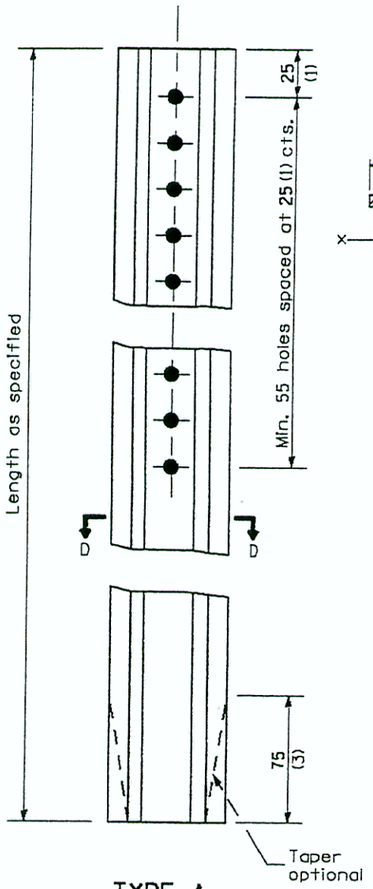

TYPE A

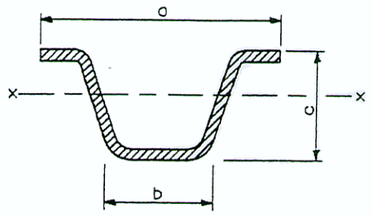

SECTION D-D

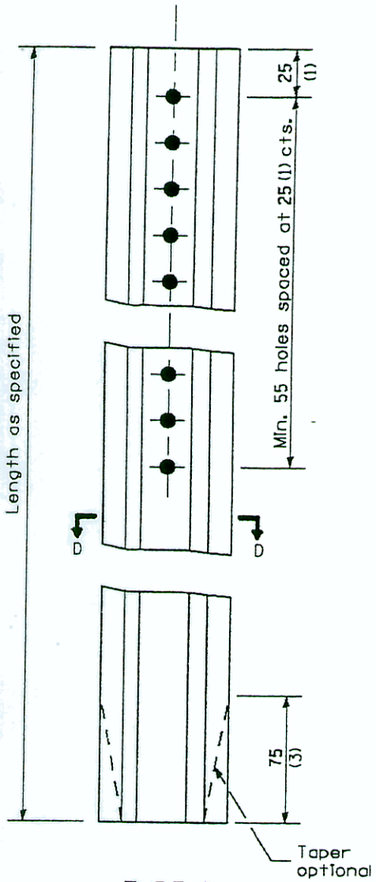

TYPE B

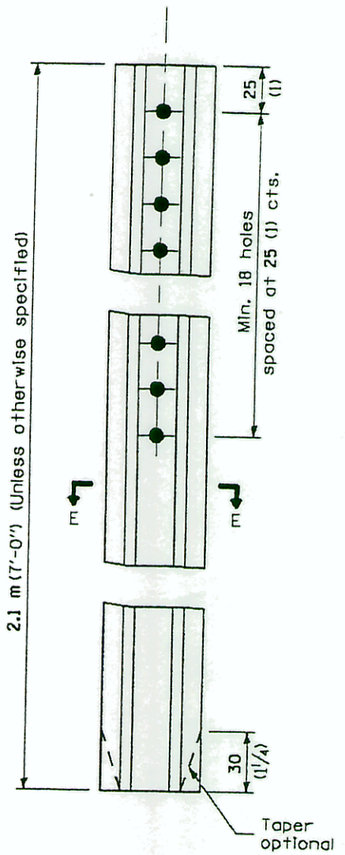

TYPE C

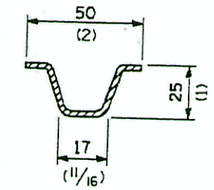

SECTION E-E

Steel - 1.67 kg/m
(1.12 lbs./ft.)

		a	b	c	S_{x-x} mm^3 ($in.^3$)	kg/m (lbs./ft.)
TYPE A	Steel	78 (3 1/16)	32 (1 1/4)	37 (1 7/16)	3,654 (0.223)	2.98 (2.00)
	Aluminum	89 (3 1/2)	41 (1 5/8)	48 (1 7/8)	7,128 (0.435)	1.34 (0.90)
TYPE B	Steel	81 (3 3/16)	32 (1 1/4)	38 (1 1/2)	5,588 (0.341)	4.46 (3.00)
	Aluminum	118 (4 5/8)	57 (2 1/4)	60 (2 3/8)	14,552 (0.888)	1.93 (1.30)

GENERAL NOTES

Dimensions shown for cross sections are minimum.

All holes are 10 mm (3/8") diameter.

S_{x-x} is the minimum section modulus about the x-x axis of the post as shown. For posts in which holes are punched or drilled for more than half their length, S_{x-x} shall be computed for the net section.

All dimensions are in millimeters (inches) unless otherwise shown.

Illinois Department of Transportation

PASSED January 1, 1997
ENGINEER OF POLICY AND PROCEDURES

APPROVED January 1, 1997
ENGINEER OF DESIGN AND ENVIRONMENT

ISSUED 1-1-97

DATE	REVISIONS
1-1-97	Renum. Standard 2350-4.
6-15-94	Added Metric.

METAL POSTS FOR SIGNS, MARKERS & DELINEATORS

STANDARD 720011

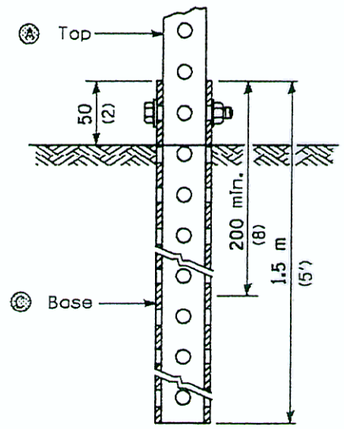

GROUND MOUNT DETAIL

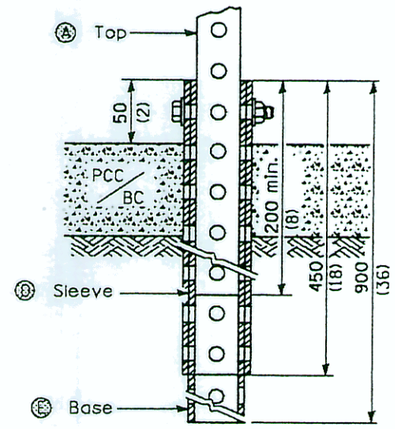

PAVEMENT MOUNT DETAIL

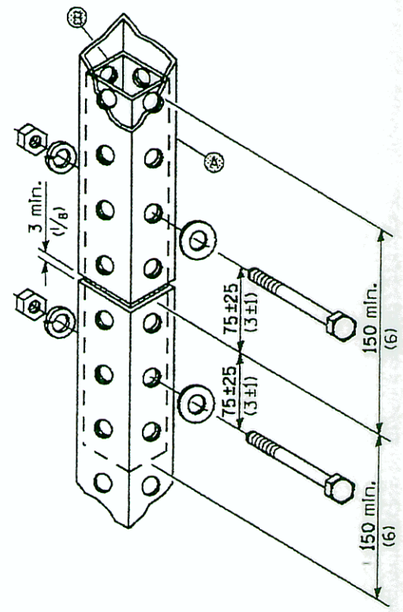

SPLICE DETAIL

Ⓐ	51 x 51 x var. (2 x 2 x var.)
Ⓑ	44 x 44 x 300 (1¾x 1¾x 12)
Ⓒ	57 x 57 x 1500 (2¼x 2¼x 60)
Ⓓ	64 x 64 x 450 (2½x 2½x 18)
Ⓔ	57 x 57 x 900 (2¼x 2¼x 36)

GENERAL NOTES

All bolts M10 (⅜) hex head zinc or cadmium plated.

All dimensions are in millimeters (inches) unless otherwise shown.

Illinois Department of Transportation

APPROVED January 1, 2007
ENGINEER OF OPERATIONS

APPROVED January 1, 2007
ENGINEER OF DESIGN AND ENVIRONMENT

ISSUED 1-1-07

DATE	REVISIONS
1-1-07	New Standard. Used to
	be part of Standard
	720006.

TELESCOPING STEEL SIGN SUPPORT

STANDARD 728001

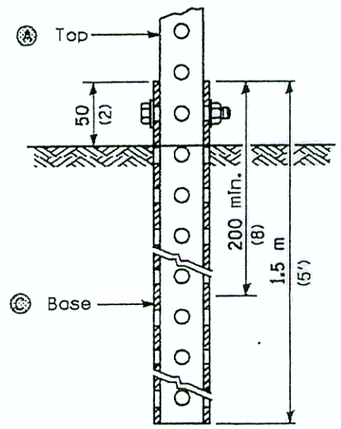

GROUND MOUNT DETAIL

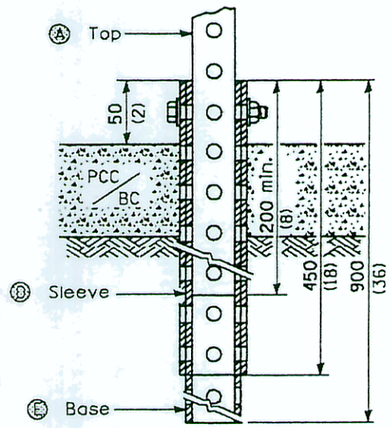

PAVEMENT MOUNT DETAIL

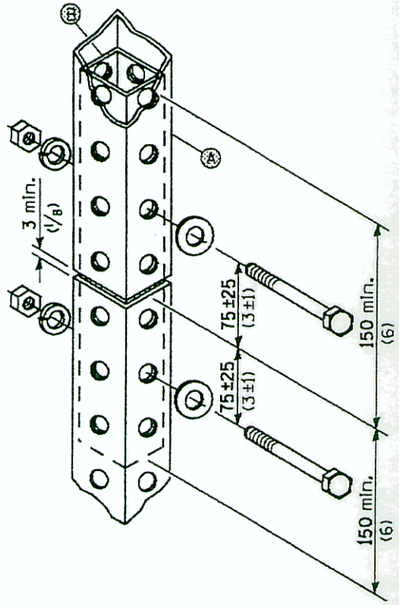

SPLICE DETAIL

Ⓐ	51 x 51 x var. (2 x 2 x var.)
Ⓑ	44 x 44 x 300 (1¾x 1¾x 12)
Ⓒ	57 x 57 x 1500 (2¼x 2¼x 60)
Ⓓ	64 x 64 x 450 (2½x 2½x 18)
Ⓔ	57 x 57 x 900 (2¼x 2¼x 36)

GENERAL NOTES

All bolts M10 (⅜) hex head zinc or cadmium plated.

All dimensions are in millimeters (inches) unless otherwise shown.

Illinois Department of Transportation

APPROVED January 1, 2007
ENGINEER OF OPERATIONS

APPROVED January 1, 2007
ENGINEER OF DESIGN AND ENVIRONMENT

ISSUED 1-1-07

DATE	REVISIONS
1-1-07	New Standard. Used to be part of Standard 720006.

TELESCOPING STEEL SIGN SUPPORT

STANDARD 728001

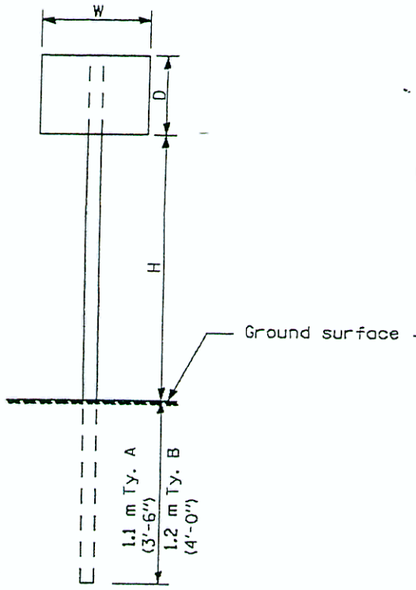

ONE POST INSTALLATION

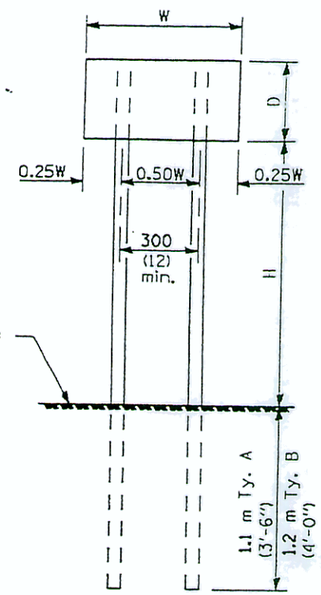

TWO POST INSTALLATION

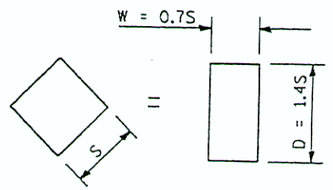

For diamond shaped sign with side S as shown, use required post size for a sign with W = 0.7S and D = 1.4S.

SIGN DEPTH (D)	H	NO. AND TYPE OF POST FOR SIGN WIDTH (W)				
		300 (12)	450 (18)	600 (24)	750 (30)	900 (36)
450 (18)	1.5 m (5'-0")	A	A	A	A	A
	1.7 m (5'-6")	A	A	A	A	A
	1.8 m (6'-0")	A	A	A	A	B
	2.0 m (6'-6")	A	A	A	A	B
	2.1 m (7'-0")	A	A	A	A	B
	2.3 m (7'-6")	A	A	A	A	B
	2.4 m (8'-0")	A	A	A	A	B
	2.6 m (8'-6")	A	A	A	B	B
	2.7 m (9'-0")	A	A	A	B	B
600 (24)	1.5 m (5'-0")	A	A	A	A	B
	1.7 m (5'-6")	A	A	A	A	B
	1.8 m (6'-0")	A	A	A	B	B
	2.0 m (6'-6")	A	A	A	B	B
	2.1 m (7'-0")	A	A	A	B	B
	2.3 m (7'-6")	A	A	A	B	B
	2.4 m (8'-0")	A	A	A	B	2A
	2.6 m (8'-6")	A	A	B	B	2A
	2.7 m (9'-0")	A	A	B	B	2A
750 (30)	1.5 m (5'-0")	A	A	A	B	B
	1.6 m (5'-6")	A	A	A	B	2A
	1.8 m (6'-0")	A	A	A	B	2A
	2.0 m (6'-6")	A	A	A	B	2A
	2.1 m (7'-0")	A	A	B	B	2A
	2.3 m (7'-6")	A	A	B	B	2A
	2.4 m (8'-0")	A	A	B	B	2A
	2.6 m (8'-6")	A	A	B	2A	2A
	2.7 m (9'-0")	A	A	B	2A	2A
900 (36)	1.5 m (5'-0")	A	A	B	B	2A
	1.7 m (5'-6")	A	A	B	B	2A
	1.8 m (6'-0")	A	A	B	B	2A
	2.0 m (6'-6")	A	A	B	2A	2A
	2.1 m (7'-0")	A	A	B	2A	2A
	2.3 m (7'-6")	A	A	B	2A	2A
	2.4 m (8'-0")	A	B	B	2A	2A
	2.6 m (8'-6")	A	B	B	2A	2B
	2.7 m (9'-0")	A	B	2A	2A	2B
1.2 m (4'-0")	1.5 m (5'-0")	A	A	B	2A	2A
	1.7 m (5'-6")	A	B	B	2A	2A
	1.8 m (6'-0")	A	B	B	2A	2A
	2.0 m (6'-6")	A	B	2A	2A	2B
	2.1 m (7'-0")	A	B	2A	2A	2B
	2.3 m (7'-6")	A	B	2A	2B	2B
	2.4 m (8'-0")	A	B	2A	2B	2B
	2.6 m (8'-6")	B	B	2B	2B	2B
	2.7 m (9'-0")	B	2A	2B	2B	2B

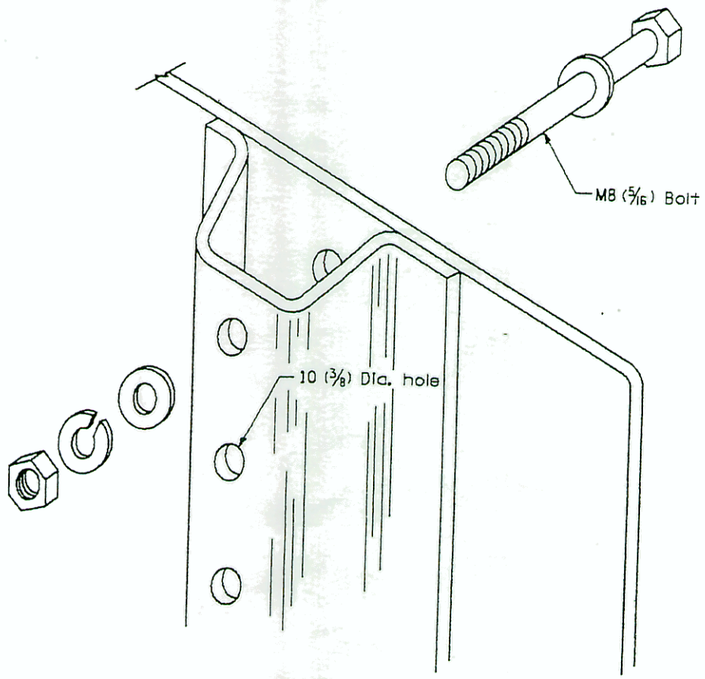

DETAIL OF MOUNTING SIGN TO POST

NOTE: Minimum of 2 bolts per post required.

GENERAL NOTES

DESIGN: Current AASHTO Standard Specifications for Structural Supports for Highway Signs, Luminaires and Traffic Signals.

LOADING: for 95 km/h (60 mph) wind velocity with 30% gust factor, normal to sign.

SOIL PRESSURE: Minimum allowable soil pressure 120 kPa (1.25 tsf).

See Standard 720011 for details of Types A and B posts.

All dimensions are in millimeters (inches) unless otherwise shown.

Illinois Department of Transportation

PASSED January 1, 1997
ENGINEER OF POLICY AND PROCEDURES

APPROVED January 1, 1997
ENGINEER OF DESIGN AND ENVIRONMENT

ISSUED 1-1-97

DATE	REVISIONS
1-1-97	Renum. Standard 2363-2.
6-15-94	Moved G.N. to Specs
	Added Metric

APPLICATIONS OF TYPES A & B METAL POSTS (FOR SIGNS & MARKERS)

STANDARD 729001