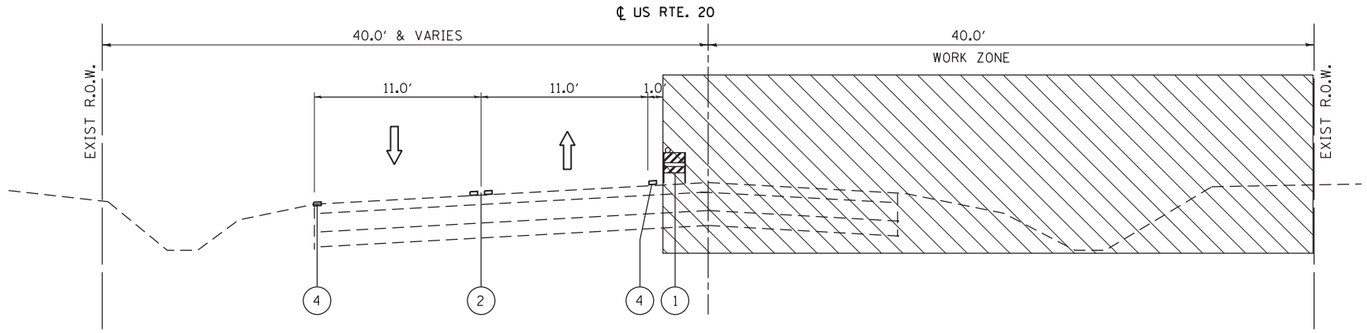

M.O.T. TYPICAL SECTION – STAGE 2
U.S. ROUTE 20

STA. 17+84 TO STA. 30+03
(LOOKING EAST)

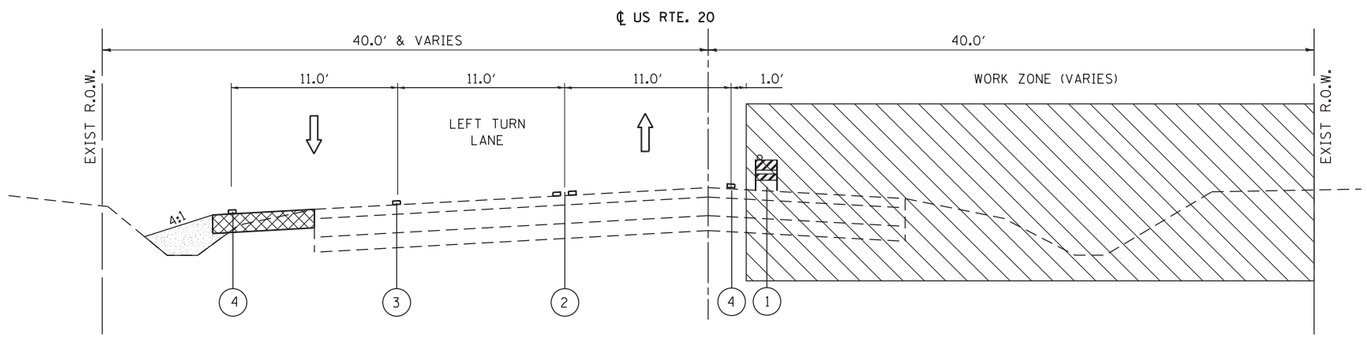

M.O.T. TYPICAL SECTION – STAGE 2
U.S. ROUTE 20

AT INTERSECTION
(LOOKING EAST)

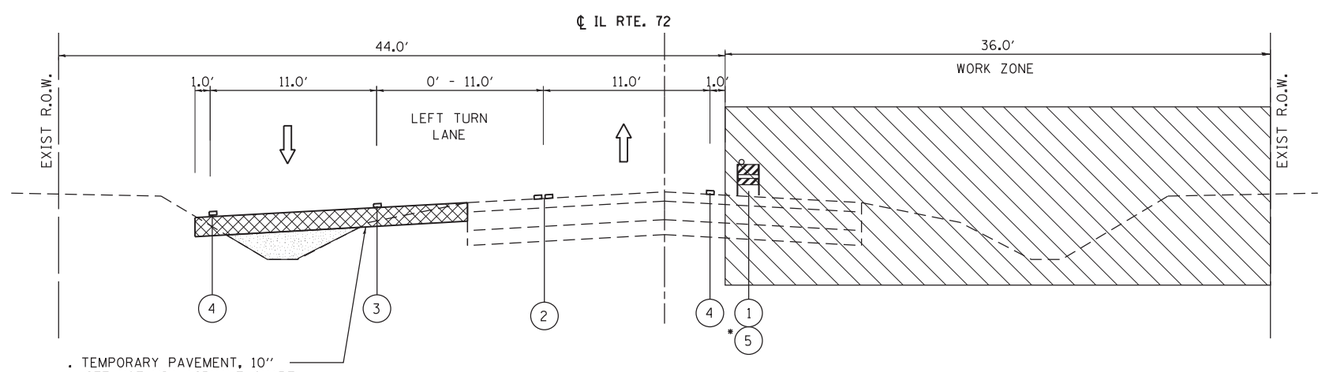

. TEMPORARY PAVEMENT, 10″
SEE HOT-MIX ASPHALT CHART
FOR MIXTURE REQUIREMENTS.

. TEMPORARY PAVEMENT WIDTH
AND LOCATIONS VARIES, SEE
MAINTENANCE OF TRAFFIC
PLANS FOR DETAILS

M.O.T. TYPICAL SECTION – STAGE 2
IL ROUTE 72

STA. 30+03 TO STA. 40+40
(LOOKING WEST)

* TEMPORARY CONCRETE BARRIER LOCATED
BETWEEN STA. 33+91 TO 37+17

LEGEND

1. TYPE II BARRICADE OR DOUBLE VERTICAL PANEL WITH STEADY BURN BI-DIRECTIONAL LIGHT @ 25′ C-C
2. TEMPORARY PAVEMENT MARKING - LINE 4″ (DOUBLE YELLOW 11″ C-C)
3. TEMPORARY PAVEMENT MARKING - LINE 6″ (WHITE)
4. TEMPORARY PAVEMENT MARKING - LINE 4″ (WHITE)
5. TEMPORARY CONCRETE BARRIER

DIRECTION OF TRAFFIC

WORK ZONE

TEMPORARY PAVEMENT

NOTES

1. PRIOR TO INSTALLING POST MOUNTED SIGNS, THE CONTRACTOR SHALL CONTACT J.U.L.I.E.
2. SEE STAGING PLAN AND STANDARD 701422 FOR ADDITIONAL INFORMATION.

FILE NAME =	USER NAME = chrisfish	DESIGNED - MTM	REVISED -
		DRAWN - MTM	REVISED -
	PLOT SCALE = 10.0000 ′ / in.	CHECKED - BA	REVISED -
Default	PLOT DATE = 4/1/2014	DATE - 3/31/14	REVISED -

STATE OF ILLINOIS
DEPARTMENT OF TRANSPORTATION

SUGGESTED MAINTENANCE OF TRAFFIC STAGE 2
TYPICAL SECTION – NORTH JUNCTION

SCALE: N.T.S. | SHEET 3 OF 6 SHEETS | STA. TO STA.

F.A.P. RTE.	SECTION	COUNTY	TOTAL SHEETS	SHEET NO.
345	106-S-N-1	KANE	167	36
		CONTRACT NO. 60T10		
	ILLINOIS FED. AID PROJECT			