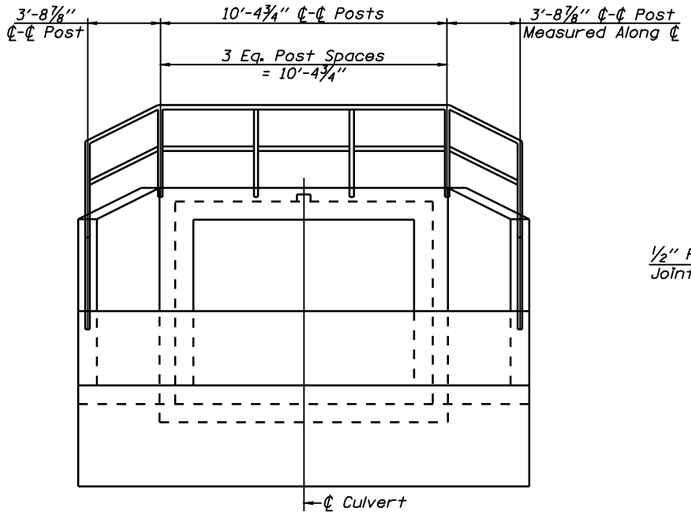

END ELEVATION
(Upstream End)

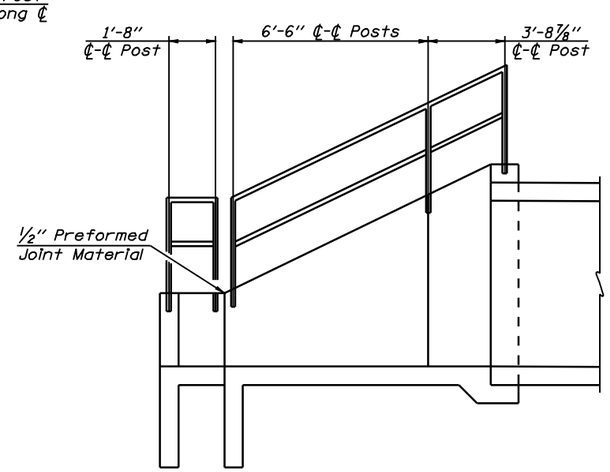

SIDE ELEVATION
(Upstream End)

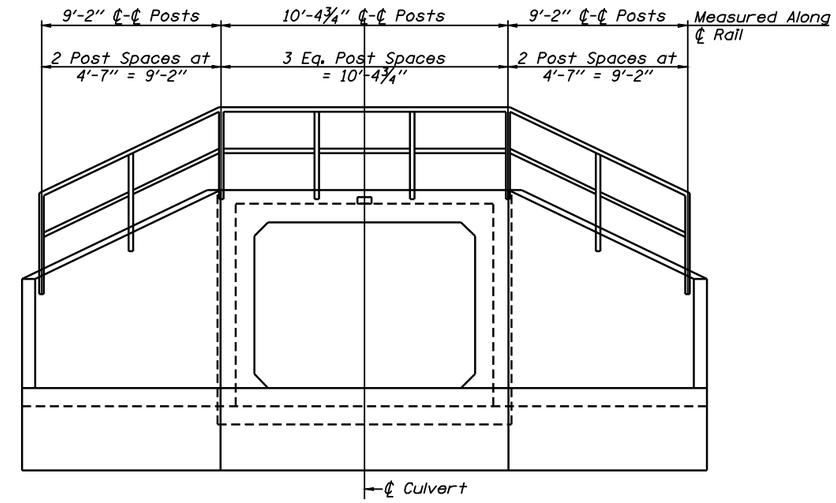

END ELEVATION
(Downstream End)

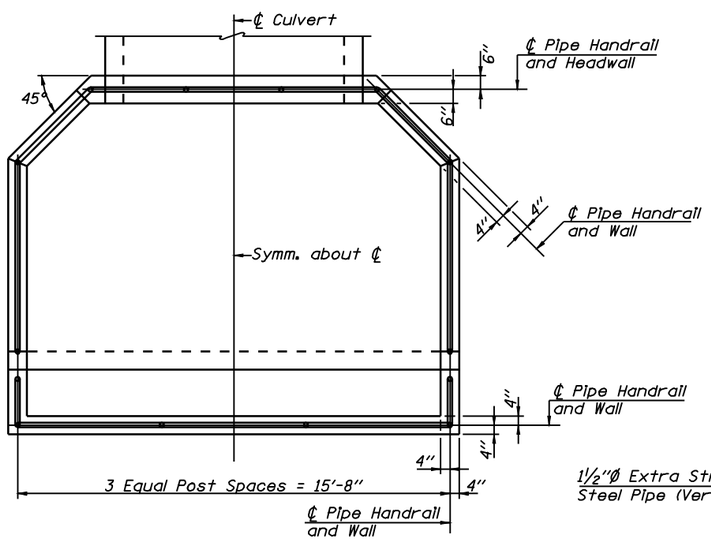

PLAN
(Upstream End)

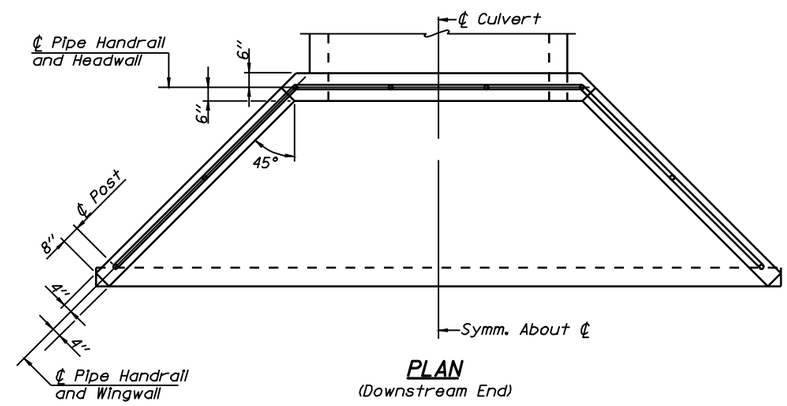

PLAN
(Downstream End)

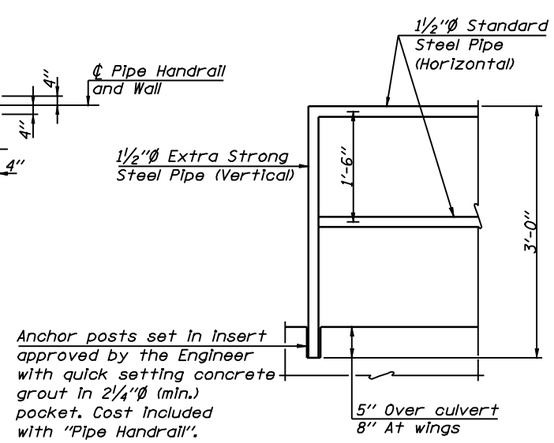

RAILING DETAIL

NOTES

Handrail shall conform to the requirements of Section 509 of the Standard Specifications.

The Pipe Handrail shall be painted in accordance with Section 506 of the Standard Specifications. The finish coat shall match Munsell Glossy Color 5B 7/1 Gray.

All steel pipe to be ASTM A53.

The unit cost per lineal foot for Pipe Handrail shall include furnishing and installing the posts, sleeves, fittings, grout, pipe, primer and paint.

BILL OF MATERIAL

Item	Unit	Quantity
Pipe Handrail	Foot	80

HANDRAIL DETAILS
WABASH AVENUE OVER
WATERWAY NO. 1
STA. 398+25.00
SANGAMON COUNTY

Allen Henderson & Associates, Inc.
Civil and Structural Engineers Springfield, IL.
62703 Phone: (217)544-8033 IL. Design Firm No. 184-001907

SHEET NO. 4
5 SHEETS

F.A.U. RTE.	SECTION	COUNTY	TOTAL SHEETS	SHEET NO.
8012	21(I-3)	SANGAMON	147	60
		CONTRACT NO. 72A02		
FED. ROAD DIST. NO.	ILLINOIS	FED. AID PROJECT		