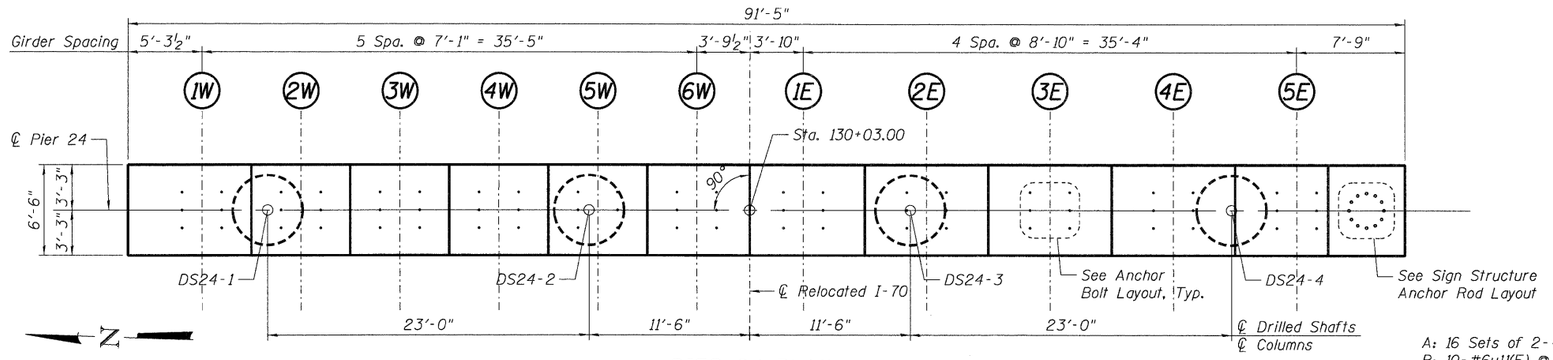

PIER 24 PLAN

BEARING SEAT ELEVATIONS

Girder	Elev.
1W	455.09
2W	454.70
3W	454.33
4W	453.95
5W	453.56
6W	453.18
1E	453.58
2E	453.11
3E	452.64
4E	452.16
5E	451.68

A: 16 Sets of 2-#6s10(E) @ 6"
B: 10-#6u11(E) @ 12"
C: 8-#6u11(E) @ 12"
D: 9-#6u11(E) @ 12"
E: 13-#6u11(E) @ 12"
F: 21 Sets of 2-#6s10(E) @ 6"
G: 9 Sets of 1-#6s12(E) & 2-#6s13(E) @ 6"

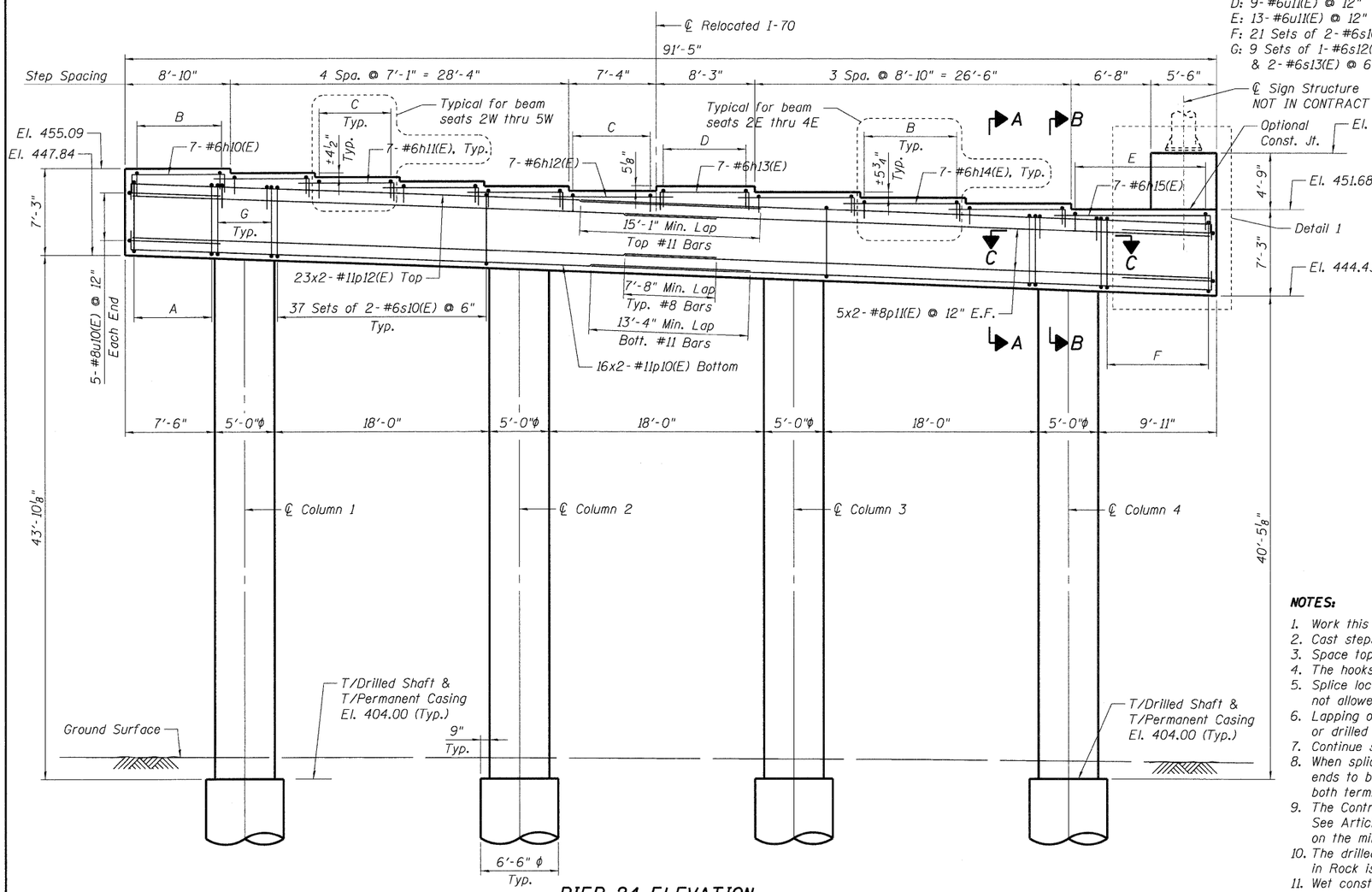

PIER 24 ELEVATION

(Looking East)

Note A:
9-#11v2(E) & 9-#11v3(E) (Alternating)
18-#11v4(E) - bundle with v2(E) and v3(E)

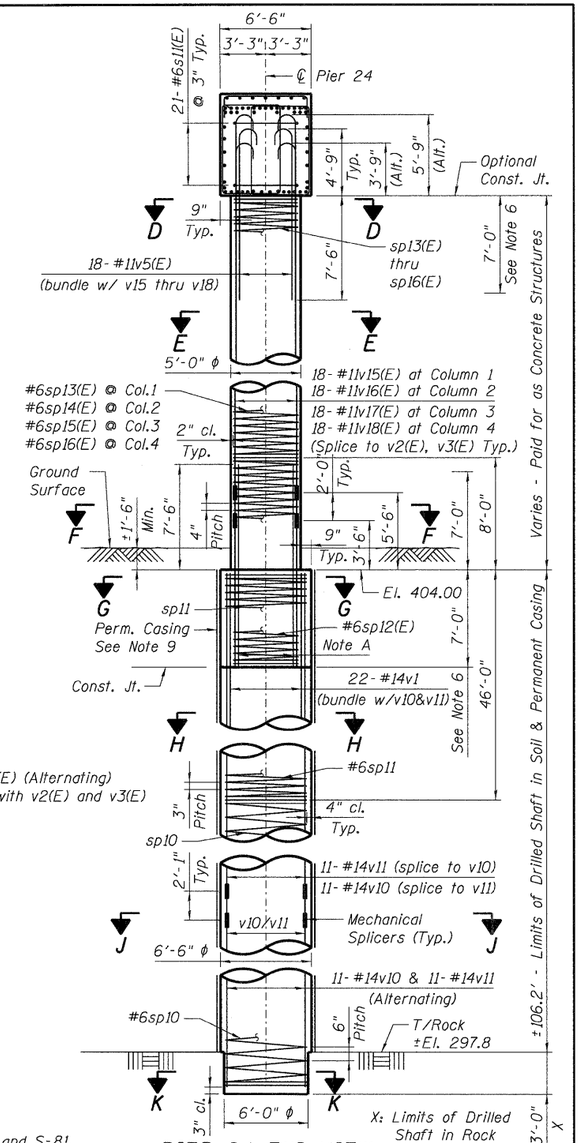

PIER 24 END VIEW

NOTES:

1. Work this sheet with Shts. S-80 and S-81.
2. Cast steps monolithically with cap.
3. Space top reinforcement in cap to miss anchor bolts.
4. The hooks of v15(E) thru v18(E) bars embedded in pier cap shall be oriented inward.
5. Splice locations of v and v(E) bars shall be staggered by 2'-0" min. Lap splicing of v and v(E) bars is not allowed, full-mechanical bar splicers or full-welding of bars is required.
6. Lapping of spiral reinforcement is not allowed within 7'-0" of T/Column and B/Column in either the columns or drilled shafts. Where splicing is necessary, fully-welded or full-mechanical splices are allowed.
7. Continue sp13(E) thru sp16(E) to bottom of pier cap stirrup bars.
8. When splicing of spiral reinforcement is necessary, the spirals shall be provided with 1½ extra turns at the ends to be spliced. These additional turns shall either be welded together according to AWS D1.4, or shall both terminate with a 135° standard hook. Provide min. 4-#4 spacers or equivalent.
9. The Contractor is responsible for determining the casing thickness and the actual tip elevation to be used. See Article 516.06(d) of the Standard Specifications. Pay limits for the Permanent Casing shall be based on the minimum length shown.
10. The drilled shaft foundation design is based on end bearing in bedrock. The limits shown for Drilled Shaft in Rock is the minimum penetration required to achieve the factored resistance used in design (200 ksf).
11. Wet construction methods within the permanent casing may be required. The Contractor's installation procedure shall clearly address cleaning and inspection methods proposed for use with wet construction methods which will ensure adequate end bearing on rock is achieved.