*REF-
*REF-
*REF-

F.A.P. RTE.	SECTION	COUNTY	TOTAL SHEETS	SHEET NO.
866	4N-1	LAKE	165	10
STA.		TO STA.		
FED. ROAD DIST. NO. 1		ILLINOIS	FED. AID PROJECT	

CONTRACT NO. 60931

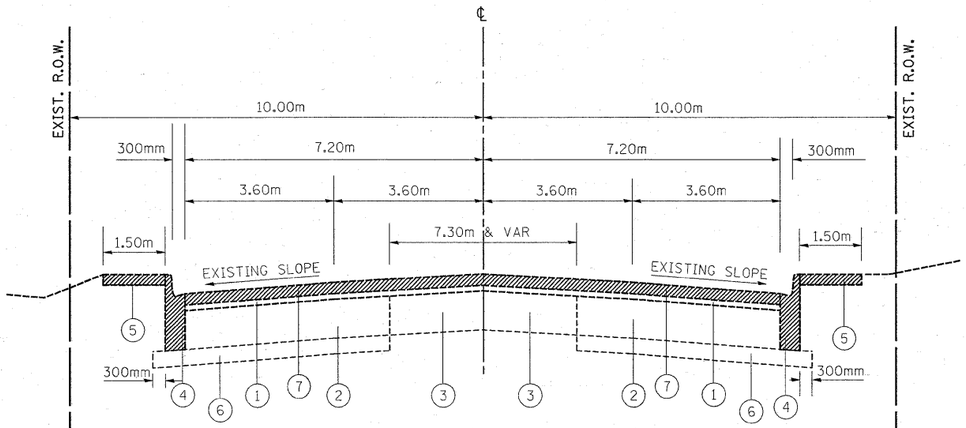

IL RTE 132 (GRAND AVE)
EXISTING TYPICAL SECTION
WEST LEG (LOOKING EAST)

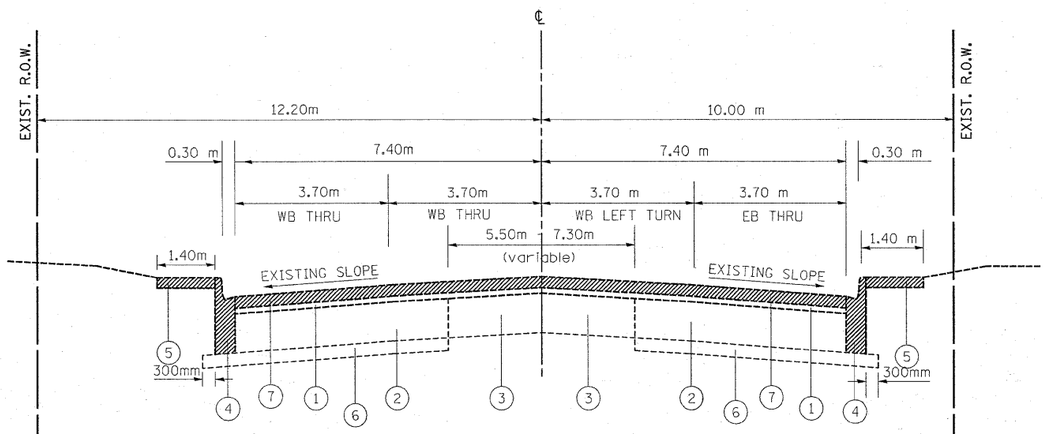

IL RTE 132 (GRAND AVE)
EXISTING TYPICAL SECTION
EAST LEG (LOOKING EAST)

LEGEND

1. EXISTING HOT-MIX ASPHALT SURFACING, 114mm
2. EXISTING HOT-MIX ASPHALT BASE COURSE, 260mm
3. EXISTING PCC BASE COURSE, 260mm
4. EXISTING CURB AND GUTTER, TYPE B-15.30
5. EXISTING SIDEWALK
6. EXISTING AGGREGATE BASE COURSE, TYPE B
7. PROPOSED HOT-MIX ASPHALT SURFACE REMOVAL, 50mm
8. PROPOSED HOT-MIX ASPHALT SURFACE COURSE, MIX "D", N70, 50mm
9. PROPOSED HMA BASE COURSE, 270mm
10. PROPOSED AGGREGATE SUBGRADE, 300mm
11. PROPOSED COMBINATION CONCRETE CURB AND GUTTER TYPE B-15.60
12. PROPOSED PCC SIDEWALK, 125mm
13. PROPOSED HOT-MIX ASPHALT SIDEWALK, 150mm

NOTE:

"THE CONTRACTOR SHALL MILL FIRST PRIOR TO PATCHING".

ADDITIONAL SUB-BASE GRANULAR MATERIAL UNDER PROPOSED CURB AND GUTTER SHALL NOT BE PAID FOR SEPARATELY BUT WILL BE CONSIDERED AS INCLUDED IN THE COST PER SQUARE METER OF SUB-BASE GRANULAR MATERIAL, TYPE B, 100mm

ANY SAW CUTTING REQUIRED TO REMOVE AN ITEM ADJACENT TO AN ITEM TO BE SAVE WILL BE CONSIDERED AS PART OF THE REMOVAL ITEM AND WILL NOT BE PAID FOR SEPARATELY.

PLACEMENT OF TIE BARS FOR COMBINATION CONCRETE CURB & GUTTER SHALL NOT BE PAID FOR SEPARATELY BUT WILL BE CONSIDERED AS INCLUDED IN THE COST PER LINEAR METER OF COMBINATION CONCRETE CURB & GUTTER, TYPE B-15.60

DENOTES REMOVAL ITEM SEE PLAN SHEETS FOR EXACT LOCATIONS.

REVISIONS	
NAME	DATE

ILLINOIS DEPARTMENT OF TRANSPORTATION

IL RTE 83 (MILWAKEE AVE)
AT IL RTE 132 (GRAND AVE)
EXISTING TYPICAL SECTION

SCALE: DRAWN BY
DATE: 3/12/2010 CHECKED BY

3/12/2010
c:\pw_work\PWIDOT\GALBANNB\d0108064\PI04498-design2.dgn
galbannb