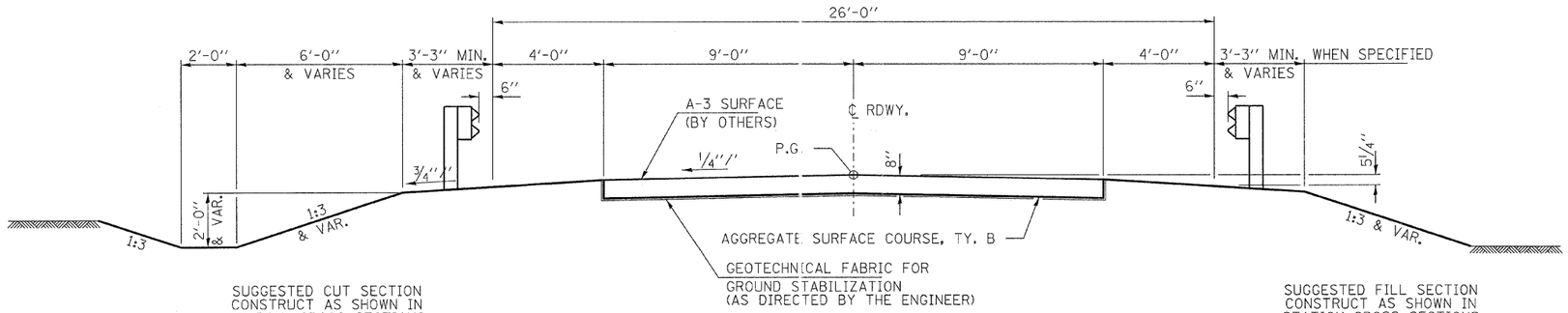

PROPOSED TYPICAL CROSS SECTION

STA. 5+00 TO STA. 9+32.25
STA. 10+67.75 TO STA. 10+84.94
STA. 13+43.12 TO STA. 15+50

TRANSITION FROM THE PROPOSED ROADWAY TO THE EXISTING ROADWAY IS TO BE CONSTRUCTED FROM STA. 5+00 TO 5+50 AND STA. 15+00 TO 15+50. SEE SHEET 23 FOR TRANSITION AT BRIDGE.

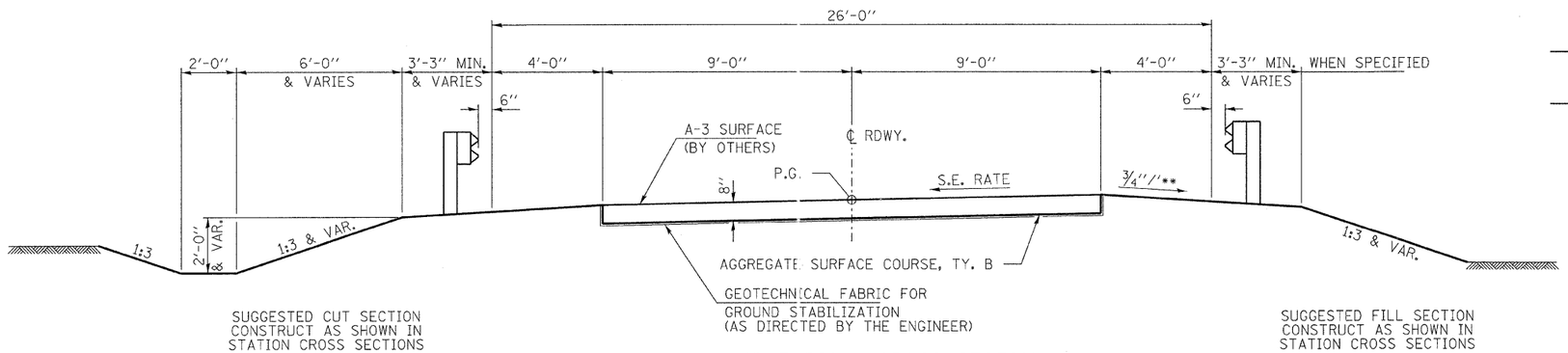

PROPOSED TYPICAL CROSS SECTION

STA. 10+84.94 TO STA. 13+43.12

** ALGEBRAIC DIFFERENCE BETWEEN S.E. AND SHOULDER SHALL NOT EXCEED 10.0%

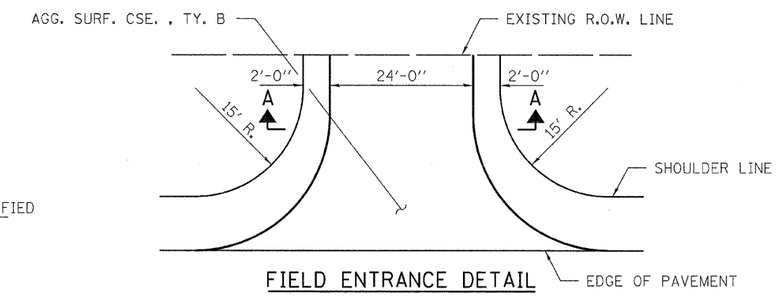

FIELD ENTRANCE DETAIL

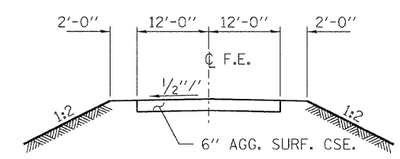

SECTION A-A

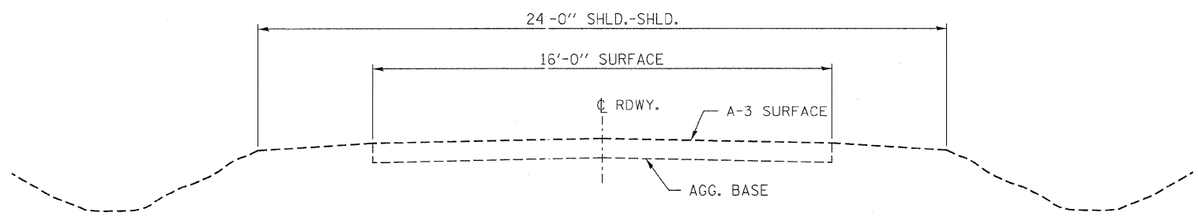

EXISTING CROSS SECTION

STA. 5+00 TO STA. 15+50

FILE NAME = 090172-sht-typsections.dgn	USER NAME =	DESIGNED - A.S.L.	REVISED -	STATE OF ILLINOIS JEFFERSON COUNTY HIGHWAY DEPARTMENT	TYPICAL SECTIONS & ENTRANCE DETAILS DENKER ROAD	T.R.	SECTION	COUNTY	TOTAL SHEETS / SHEET NO.
HAMPTON, LENZINI AND RENWICK, INC. 3065 STEVENSON DRIVE, SUITE 201 SPRINGFIELD, ILLINOIS 62703		DRAWN - D.A.B.	REVISED -			165B	05-16113-00-BR	JEFFERSON	34 / 4
ILLINOIS PROFESSIONAL DESIGN FIRM LS / PE / SE CORP. 184.000059	PLOT SCALE =	CHECKED - S.W.M.	REVISED -			WEBBER ROAD DISTRICT		CONTRACT NO. 99440	
	PLOT DATE = 2/4/2011	DATE - 02/03/11	REVISED -		SCALE: SHEET NO. OF SHEETS STA. TO STA.	FED. ROAD DIST. NO.	ILLINOIS	FED. AID PROJECT	