F.A.I RTE.	SECTION	COUNTY	TOTAL SHEETS	SHEET NO.
474	[(72,90)5B]I-2	PEORIA / TAZEWELL	129	1
		ILLINOIS	CONTRACT NO. 68069	

INDEX OF SHEETS 06-17-11 LETTING ITEM 291

HIGHWAY STANDARDS

000001–06	701201–04
280001–05	701400–05
482006–03	701401–06
542401–01	701411–07
635006–03	701416–06
635011–02	701426–04
642001–01	701901–01
701101–02	704001–06
701106–02	781001–03

CADD STANDARDS

280001–D4
281001–D4
780001–D4

ADT = 15,599
MU = 1,638
SU = 702

0 10' 20' 30' 100' 200' 300' — 1" = 100'
— 1" = 10'
0 50' 100' — 1" = 50'
0 50' 100' — 1" = 40'
0 50' 100' — 1" = 30'
0 50' 100' — 1" = 20'

FULL SIZE PLANS HAVE BEEN PREPARED USING STANDARD ENGINEERING SCALES. REDUCED SIZED PLANS WILL NOT CONFORM TO STANDARD SCALES. IN MAKING MEASUREMENTS ON REDUCED PLANS, THE ABOVE SCALES MAY BE USED.

J.U.L.I.E.
JOINT UTILITY LOCATION INFORMATION FOR EXCAVATION
1–800–892–0123
OR 811

PROJECT ENGINEER: CHRISTOPHER MAUSHARD (309) 671–3453
PROJECT MANAGER: SOBHI LABABIDI (309) 671–3460

CONTRACT NO. 68069
CATALOG NO. 032243–00D

STATE OF ILLINOIS
DEPARTMENT OF TRANSPORTATION
DIVISION OF HIGHWAYS

PROPOSED HIGHWAY PLANS

FAI 474 ROUTE I–474
SECTION [(72,90)5B]I–2
PROJECT IM-474-7(103)095
TYPE of IMPROVEMENT: BRIDGE REPAIR
PEORIA / TAZEWELL COUNTY

C–94–064–11

PROJECT BEGINS STA 428 + 11
PROJECT ENDS STA. 135 + 00

STATION EQUATION:
STA 449 + 28.26 BK =
STA 56 + 06.88 AH

SN # 090–0108 EB
SN # 090–0109 WB

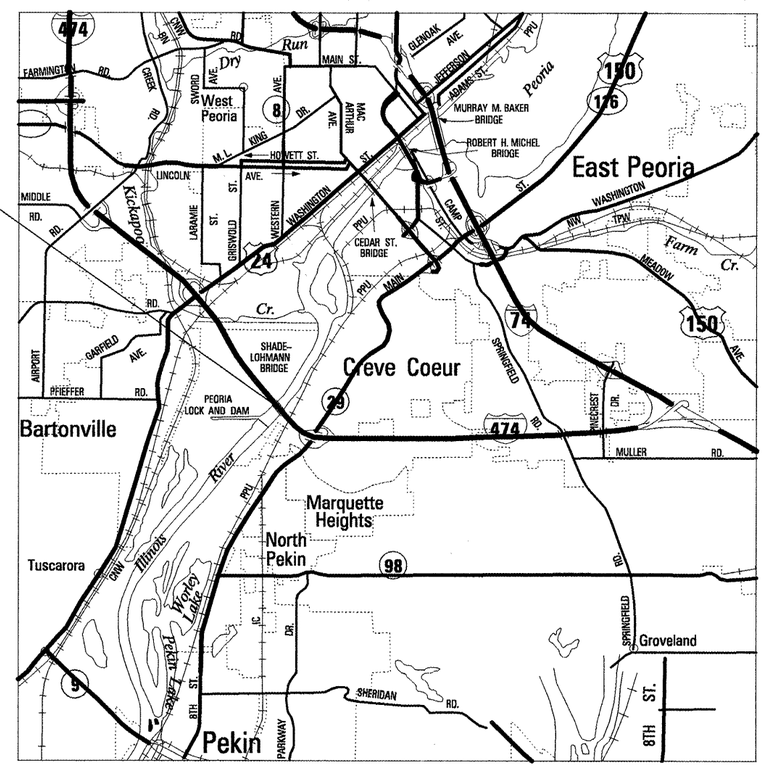

N

GROSS LENGTH = 10,010 FT. = 1.896 MILE
NET LENGTH = 3,467 FT. = 0.66 MILE

D–94–055–00

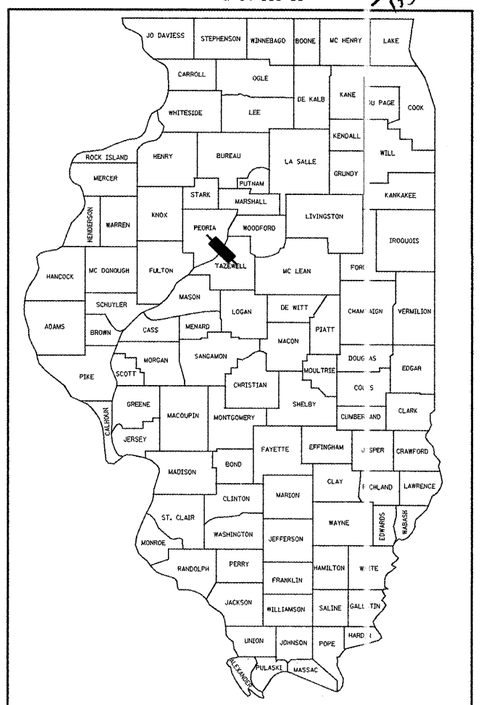

LOCATION OF SECTION INDICATED THUS: –

PROJECT DESCRIPTION:

DECK REPAIRS, DECK OVERLAY, BRIDGE JOINT REPAIRS AND METALIZING, MISCELLANEOUS STRUCTURE REPAIRS AND ELECTRICAL WORK TO STRUCTURE CARRYING I–474 (SHADE LOHMANN BRIDGE) OVER ILLINOIS RIVER (S.N. 090–0108 EB, 090–0109 WB) WEST OF CREVE COEUR

STATE OF ILLINOIS
DEPARTMENT OF TRANSPORTATION
DIVISION OF HIGHWAYS

SUBMITTED 2/10, 2011
Joseph E. Crowe
DEPUTY DIRECTOR OF HIGHWAYS, REGIONAL ENGINEER

May 13, 2011
Scott E. Stitt P.E. for
acting ENGINEER OF DESIGN AND ENVIRONMENT

May 13, 2011
Christine M. Reed for
DIRECTOR OF HIGHWAYS, CHIEF ENGINEER

PRINTED BY THE AUTHORITY OF THE STATE OF ILLINOIS

COMMITMENTS

Commitments are not to be altered without the written approval of all parties to which the commitment was made.

NO COMMITMENTS HAVE BEEN MADE FOR THIS PROJECT

GENERAL NOTES

UTILITIES – LOCATIONS /INFORMATION ON PLANS

The locations of existing water mains, gas mains, sewers, electric power lines, telephone lines and other utilities as shown on the plans are based on careful field investigation and the best information available, but they are not guaranteed. Unless elevations are shown —— all utility locations shown on the cross sections are based on the approximate depth supplied by the utility company. It shall be the Contractor's responsibility to ascertain their exact location from the utility companies and by field inspection.

PLAN ELEVATIONS – U. S. G. S. MEAN SEA LEVEL DATUM

Use one of the following two options.

1. All elevations shown on the plans are established from U. S. G. S. mean sea level datum.

ENVIRONMENTAL REVIEWS

Prior to the use of any proposed borrow areas, use areas (temporary access roads, detours, run–arounds, etc.) and/or waste areas, the Contractor shall file the required environmental resource request surveys according to Section 107.22 of the Standard Specifications. These surveys are required in order for the Department to conduct cultural and biological resource surveys for the proposed site.

Prior to any waste materials being removed from the construction site the required environmental resource surveys will need to be obtained and filed by the Contractor. Excess waste products removed from the construction site shall be disposed of as required in Section 202.03 of the Standard Specifications.

Any protruding metal bars shall be removed prior to the disposal of broken concrete at approved disposal sites.

The required environmental resource documentation shall include the following:

* BDE Form 2289 (Environmental Survey Request)
* A location map showing the size limits and location of the use area
* Signed property owner agreement form–D4 PI0100
* Color photographs depicting the use area
* Borrow Area Entry Agreement form–D4 PI0101

Please note that a minimum of two weeks shall be allowed for the District to obtain the required environmental clearances.

BRIDGE OVERLAY NOTIFICATION

After placement of the bridge deck overlay, the Resident Engineer shall notify the District Bridge Maintenance Engineer of the "as constructed" milling depth and overlay thickness for updating the Illinois Highway Information System.

HOT–MIX ASPHALT MIXTURE REQUIREMENTS
CROSS OVERS

Mixture Use(s):	POLYMER SURFACE COURSE P HMA SC "D" N70 (2")	BINDER COURSE HMA BC IL 19.0 N70 (8")	POLYMER SURFACE COURSE HMA SHOULDERS (2")	BINDER COURSE HMA SHOULDERS (8")
AC/PG:	PG 64–22	PG 64–22	PG 64–22	PG 64–22
RAP% (Max): **	10%	15%	10%	15%
Design Air Voids:	4.0% @ N=70	4.0% @ N=70	4.0% @ N=70	4.0% @ N=70
Mixture Composition: (Gradation Mixture)	IL 9.5 or IL12.5	IL 19.0	IL 9.5 or IL12.5	IL 19.0
Friction Aggregate:	Mixture E	N.A.	Mixture E	N.A.

** If the RAP option is selected, the asphalt cement grade may need to be adjusted; this will be determined by the Engineer.

PAVING SURFACE COURSE

Continuous paving operations on the main roadway shall be maintained at all times during the construction of the hot–mix asphalt surface. No interruptions for side roads, entrances, turn lanes, etc. will be allowed.

ORDERING LENGTH CONFIRMATION – DRAINAGE ITEMS

The Contractor shall consult with the Engineer in regard to the exact length of the box/pipe culverts, storm sewers, and/or pipe drains required prior to ordering these items.

SIGNING

Sign locations may vary from the stations shown on the plans in accordance with directions from the Engineer at the time of construction. Sign locations may be adjusted in the field to avoid any found utilities.

All wood post locations shall be verified with the Bureau of Operations, Traffic Section, before installation.

SUMMARY OF QUANTITIES

Specialty_Item	CodeNo	Description	Unit	Total Quantities URBAN	1 0014 Tazewell Structure 90/10 FED. STATE	2 0005 Peoria County 90/10 FED. STATE	3 0005 Tazewell County 90/10 FED. STATE	4 0005 Peoria County 100% State	5 0005 Tazewell County 100% State	6 0021 Peoria County Homeland Security Funds 100% FED	7 0021 Tazewell County Homeland Security Funds 100% FED	8 0021 LIGHTING Peoria County 90/10 FED. STATE	9 0021 LIGHTING Tazewell County 90/10 FED. STATE
	20400800	FURNISHED EXCAVATION	CU YD	865		495	370						
	20800150	TRENCH BACKFILL	CU YD	28		16	12						
	21101615	TOPSOIL FURNISH AND PLACE, 4"	SQ YD	1760		1005	755						
	28000400	PERIMETER EROSION BARRIER	FOOT	200		100	100						
	28000500	INLET AND PIPE PROTECTION	EACH	4		2	2						
	31100100	SUB BASE GRANULAR MATERIAL, TYPE A	TON	2350		1225	1125						
	40600215	POLYMERIZED BITUMINOUS MATERIALS (PRIME COAT)	TON	11		6.4	4.6						
	40603085	HOT - MIX ASPHALT BINDER COURSE, IL - 19.0, N70	TON	1535		800	735						
	40603540	POLYMERIZED HOT - MIX ASPHALT SURFACE COURSE, MIX "D", N70	TON	385		200	185						
	40603565	POLYMERIZED HOT - MIX ASPHALT SURFACE COURSE, MIX "E", N70	TON	160		115	45						
	~~44000155~~	~~HOT - MIX ASPHALT SURFACE REMOVAL, 1 1/2"~~	~~SQ YD~~	~~29901~~	~~29901~~								
	44004250	PAVED SHOULDER REMOVAL	SQ YD	2690		1700	990						
	48203100	HOT - MIX ASPHALT SHOULDERS	TON	635		180	455						
	50102400	CONCRETE REMOVAL	CU YD	187	187								
	~~50157000~~	~~PROTECTIVE SHIELD~~	~~SQ YD~~	~~10734~~	~~10734~~								
	50300100	FLOOR DRAINS	EACH	380	380								
	50300255	CONCRETE SUPERSTRUCTURE	CU YD	219	219								
	50300260	BRIDGE DECK GROOVING	SQ YD	28509	28509								
	50300300	PROTECTIVE COAT	SQ YD	5,698	5,698								

SUMMARY OF QUANTITIES

Specialty_Item	CodeNo	Description	Unit	Total Quantities URBAN	1 0014 Tazewell Structure 90/10 FED. STATE	2 0005 Peoria County 90/10 FED. STATE	3 0005 Tazewell County 90/10 FED. STATE	4 0005 Peoria County 100% State	5 0005 Tazewell County 100% State	6 0021 Peoria County Homeland Security Funds 100% FED	7 0021 Tazewell County Homeland Security Funds 100% FED	8 0021 LIGHTING Peoria County 90/10 FED. STATE	9 0021 LIGHTING Tazewell County 90/10 FED. STATE
	50500405	FURNISHING AND ERECTING STRUCTURAL STEEL	POUND	9,590	9,590								
	50800205	REINFORCEMENT BARS, EPOXY COATED	POUND	45,300	45,300								
	52000110	PREFORMED JOINT STRIP SEAL	FOOT	738	738								
	52000208	FINGER PLATE EXPANSION JOINT, 3"	FOOT	78	78								
	52000600	FABRIC REINFORCED ELASTOMERIC TROUGH	FOOT	395	395								
	52100540	ANCHOR BOLTS, 1 1/2"	EACH	96	96								
	54213879	STEEL END SECTIONS 24"	EACH	4		2	2						
	542A0213	PIPE CULVERTS, CLASS A, TYPE 1 8"	FOOT	500		320	180						
	542D0229	PIPE CULVERTS, CLASS D, TYPE 1 24"	FOOT	475		275	200						
	58700300	CONCRETE SEALER	SQ FT	1719	1719								
	64200105	SHOULDER RUMBLE STRIPS	FOOT	3105		1825	1280						
	67000400	ENGINEER'S FIELD OFFICE, TYPE A	CAL MO	19		9	10						
	67100100	MOBILIZATION	L SUM	1		0.5	0.5						
	70106800	CHANGEABLE MESSAGE SIGN	CAL MO	60		15	45						
	70300520	PAVEMENT MARKING TAPE, TYPE III 4"	FOOT	67850		37318	30532						
	70301000	WORK ZONE PAVEMENT MARKING REMOVAL	SQ FT	22617		12440	10177						
	70400100	TEMPORARY CONCRETE BARRIER	FOOT	4675		2572	2103						
	70400200	RELOCATE TEMPORARY CONCRETE BARRIER	FOOT	4675		2572	2103						
	78300100	PAVEMENT MARKING REMOVAL	SQ FT	7700		4235	3465						

SUMMARY OF QUANTITIES

Specialty_Item	CodeNo	Description	Unit	Total Quantities URBAN	1 0014 Tazewell Structure 90/10 FED. STATE	2 0005 Peoria County 90/10 FED. STATE	3 0005 Tazewell County 90/10 FED. STATE	4 0005 Peoria County 100% State	5 0005 Tazewell County 100% State	6 0021 Peoria County Homeland Security Funds 100% FED	7 0021 Tazewell County Homeland Security Funds 100% FED	8 0021 LIGHTING Peoria County 90/10 FED. STATE	9 0021 LIGHTING Tazewell County 90/10 FED. STATE
X	81012600	CONDUIT IN TRENCH, 2" DIA., PVC	FOOT	4020						1765	2255		
X	81021330	CONDUIT PUSHED, 2" DIA., PVC	FOOT	300						250	50		
X	81100300	CONDUIT ATTACHED TO STRUCTURE, 1" DIA., GALVANIZED STEEL	FOOT	235						140	95		
X	81100400	CONDUIT ATTACHED TO STRUCTURE, 1 1/4" DIA., GALVANIZED STEEL	FOOT	240						160	80		
X	81100600	CONDUIT ATTACHED TO STRUCTURE, 2" DIA., GALVANIZED STEEL	FOOT	5115						1800	3315		
X	81300948	JUNCTION BOX, STAINLESS STEEL, ATTACHED TO STRUCTURE, 24" X 24" X 10"	EACH	12						5	7		
X	81603030	UNIT DUCT,600V,2-1C NO.4,1/C NO.6 GROUND,(XLP-TYPE USE), 1" DIA. POLYETHYLENE	FOOT	1975						1615			360
X	81702120	ELECTRIC CABLE IN CONDUIT, 600V (XLP-TYPE USE) 1/C NO. 8	FOOT	3270						916	2354		
X	81702130	ELECTRIC CABLE IN CONDUIT, 600V (XLP-TYPE USE) 1/C NO. 6	FOOT	4634						888	3746		
X	81702140	ELECTRIC CABLE IN CONDUIT, 600V (XLP-TYPE USE) 1/C NO. 4	FOOT	3348						944	2404		
X	81800185	AERIAL CABLE, 2-1/C NO. 1/0 WITH MESSENGER WIRE	FOOT	1300								1300	
X	81900200	TRENCH AND BACKFILL FOR ELECTRICAL WORK	FOOT	10260						1705	2195	6000	360
X	82103900	LUMINAIRE, SODIUM VAPOR, MULTI-MOUNT, 250 WATT	EACH	4									4
X	82104000	LUMINAIRE, SODIUM VAPOR, MULTI-MOUNT, 400 WATT	EACH	11								6	5
X	83057012	LIGHT POLE, WOOD, 30FOOT, CLASS 5	EACH	1								1	
X	83057340	LIGHT POLE, WOOD, 60 FOOT, CLASS 3	EACH	7								6	1
	84100110	REMOVAL OF TEMPORARY LIGHTING UNIT	EACH	11								6	5
X	87012400	ELECTRIC CABLE IN TRENCH, 600V (TRIPLEXED) 2-1/C, NO. 4/0 AND 1/C NO. 2/0 GROUND	FOOT	6,360								6,000	360
X	87100140	FIBER OPTIC CABLE IN CONDUIT, NO. 62.5/125, 12F	FOOT	4802						965	3837		
X	87800310	CONCRETE FOUNDATION, TYPE E 24-INCH DIAMETER (SPECIAL)	FOOT	10						5	5		
X	87800415	CONCRETE FOUNDATION, TYPE E 36-INCH DIAMETER	FOOT	35						15	20		

SUMMARY OF QUANTITIES

Specialty_Item	CodeNo	Description	Unit	Total Quantities URBAN	1 0014 Tazewell Structure 90/10 FED. STATE	2 0005 Peoria County 90/10 FED. STATE	3 0005 Tazewell County 90/10 FED. STATE	4 0005 Peoria County 100% State	5 0005 Tazewell County 100% State	6 0021 Peoria County Homeland Security Funds 100% FED	7 0021 Tazewell County Homeland Security Funds 100% FED	8 0021 LIGHTING Peoria County 90/10 FED. STATE	9 0021 LIGHTING Tazewell County 90/10 FED. STATE
X	87900200	DRILL EXISTING HANDHOLE	EACH	3						2	1		
	X0322559	BOLT REPLACEMENT	EACH	340	340								
	X0323388	TRAFFIC COUNTER	EACH	2						1	1		
	X0323818	CLEANING AND PAINTING EXPOSED REBAR	SQFT	82	82								
	X0323900	CONCRETE FOUNDATION, TYPE I	FOOT	7						3.5	3.5		
X	X0323906	CAMERA POLE, 45 FT	EACH	1						1			
X	X0323917	CABINET, MODEL 334	EACH	2						1	1		
X	X0323920	POLE MOUNTED EQUIPMENT CABINET, TYPE B	EACH	7						4	3		
X	X0325272	TRAFFIC SIGNAL POST, SPECIAL	EACH	2						1	1		
	X0325381	FIELD THERMAL SPRAYING (METALLIZING) STRUCTURAL STEEL NO. 1	L SUM	1	1								
	X0325382	FIELD THERMAL SPRAYING (METALLIZING) STRUCTURAL STEEL NO. 2	L SUM	1	1								
X	X0325583	REMOVE AND REINSTALL FINGER PLATE JOINT	EACH	8	8								
X	X0326260	ETHERNET SWITCH (MATERIAL ONLY)	EACH	18						6	12		
X	X0326812	CAT 5 ETHERNET CABLE	FOOT	747						337	410		
X	X0326905	CLOSED CIRCUIT TELEVISION DOME CAMERA, IP BASED	EACH	9						5	4		
X	X0326906	CLOSED CIRCUIT TELEVISION DOME CAMERA, IP BASED (MATERIAL ONLY)	EACH	2						1	1		
X	X0327121	CAMERA POLE, 55 FT	EACH	1							1		
	X2503100	MOWING	UNIT	140				77	63				
	X5030530	FLOOR DRAIN EXTENSION	EACH	389	389								
	X5080600	MECHANICAL SPLICERS	EACH	2,000	2,000								
	X5210160	HIGH LOAD MULTI-ROTATIONAL BEARINGS, GUIDED EXPANSION, 450K	EACH	4	4								
	X5210180	HIGH LOAD MULTI-ROTATIONAL BEARINGS, GUIDED EXPANSION, 550K	EACH	20	20								

SUMMARY OF QUANTITIES

Specialty_Item	CodeNo	Description	Unit	Total Quantities URBAN	1 0014 Tazewell Structure 90/10 FED. STATE	2 0005 Peoria County 90/10 FED. STATE	3 0005 Tazewell County 90/10 FED. STATE	4 0005 Peoria County 100% State	5 0005 Tazewell County 100% State	6 0021 Peoria County Homeland Security Funds 100% FED	7 0021 Tazewell County Homeland Security Funds 100% FED	8 0021 LIGHTING Peoria County 90/10 FED. STATE	9 0021 LIGHTING Tazewell County 90/10 FED. STATE
	X7010216	TRAFFIC CONTROL AND PROTECTION (SPECIAL)	L SUM	1		0.3	0.7						
	X7040010	TEMPORARY CONCRETE BARRIER (SPECIAL)	FOOT	190		110	80						
X	X7800610	URETHANE PAVEMENT MARKING - LINE 4"	FOOT	44200		21230	22970						
X	X7800630	URETHANE PAVEMENT MARKING - LINE 6"	FOOT	4820		2651	2169						
X	X7800640	URETHANE PAVEMENT MARKING - LINE 8"	FOOT	3190			3190						
X	X7800650	URETHANE PAVEMENT MARKING - LINE 12"	FOOT	195			195						
X	X7830070	GROOVING FOR RECESSED PAVEMENT MARKING 5"	FOOT	44200		21230	22970						
X	X7830074	GROOVING FOR RECESSED PAVEMENT MARKING 7"	FOOT	4820		2651	2169						
X	X7830076	GROOVING FOR RECESSED PAVEMENT MARKING 9"	FOOT	3190			3190						
X	X7830078	GROOVING FOR RECESSED PAVEMENT MARKING 13"	FOOT	195			195						
X	X8040102	ELECTRIC SERVICE INSTALLATION, SPECIAL	EACH	1							1		
X	X8250505	LIGHTING CONTROLLER, SPECIAL	EACH	1								1	
X	X8710030	FIBER OPTIC CABLE 48 FIBERS, SINGLE MODE	FOOT	5254						2448	2806		
X	X8710050	FIBER OPTIC ETHERNET DROP AND REPEAT SWITCH	EACH	4						2	2		
●	Z0076600	TRAINEES	HOUR	1000	1,000								
	Z0001899	JACK AND REMOVE EXISTING BEARINGS	EACH	24	24								
	Z0001905	STRUCTURAL STEEL REPAIR	POUND	20,500	20,500								
	Z0004556	HOT-MIX ASPHALT SURFACE REMOVAL (DECK)	SQ YD	29,961	29,961								
	Z0006012	BRIDGE DECK LATEX CONCRETE OVERLAY, 2 1/4 INCHES	SQ YD	29520	29520								
	Z0007101	CONTAINMENT AND DISPOSAL OF LEAD PAINT CLEANING RESIDUES NO.1	L SUM	1	1								
	Z0007102	CONTAINMENT AND DISPOSAL OF LEAD PAINT CLEANING RESIDUES NO.2	L SUM	1	1								
	Z0012130	BRIDGE DECK SCARIFICATION 3/4"	SQ YD	29,961	29,961								

● QQ42

FILE NAME = Sm.0.0.dgn	USER NAME = labebtdsm	DESIGNED -	REVISED -	STATE OF ILLINOIS DEPARTMENT OF TRANSPORTATION	SUMMARY OF QUANTITIES	F.A.I. RTE. 474	SECTION (72, 90)5B)I-2	COUNTY PEORIA-TAZ
		DRAWN -	REVISED -					TOTAL SHEETS 129 / SHEET NO. 7
	PLOT SCALE = 100.0000 ' / IN.	CHECKED -	REVISED -		SCALE: / SHEET NO. OF SHEETS / STA. TO STA.			CONTRACT NO. 68069
	PLOT DATE = 2/10/2011	DATE -	REVISED -					ILLINOIS FED. AID PROJECT

SUMMARY OF QUANTITIES

Specialty_Item	CodeNo	Description	Unit	Total Quantities URBAN	1 0014 Tazewell Structure 90/10 FED. STATE	2 0005 Peoria County 90/10 FED. STATE	3 0005 Tazewell County 90/10 FED. STATE	4 0005 Peoria County 100% State	5 0005 Tazewell County 100% State	6 0021 Peoria County Homeland Security Funds 100% FED	7 0021 Tazewell County Homeland Security Funds 100% FED	8 0021 LIGHTING Peoria County 90/10 FED. STATE	9 0021 LIGHTING Tazewell County 90/10 FED. STATE
	Z0012754	STRUCTURAL REPAIR OF CONCRETE (DEPTH EQUAL TO OR LESS THAN 5 INCHES)	SQ FT	2,871	2,871								
	Z0013798	CONSTRUCTION LAYOUT	L SUM	1		0.55	0.45						
	Z0015802	PLUG EXISTING DECK DRAINS	EACH	1331	1331								
	Z0016001	DECK SLAB REPAIR (FULL DEPTH, TYPE I)	SQ YD	102	102								
	Z0016002	DECK SLAB REPAIR (FULL DEPTH, TYPE II)	SQ YD	28	28								
	~~Z0016200~~	~~DECK SLAB REPAIR (PARTIAL)~~	~~SQ YD~~	~~58.9~~	~~58.9~~								
X	Z0033052	COMMUNICATIONS VAULT	EACH	4						1	3		
	Z0048665	RAILROAD PROTECTIVE LIABILITY INSURANCE	L SUM	1			1						
	Z0062000	SAW CUTTING	FOOT	3105		1825	1280						
	~~X5210180~~	~~HIGH LOAD MULTI-ROTATIONAL BEARINGS, GUIDED EXPANSION, 550K~~	~~EACH~~	~~20~~	~~20~~								
	~~Z0012130~~	~~BRIDGE DECK SCARIFICATION 3/4"~~	~~SQ YD~~	~~29961~~	~~29961~~								
~~X~~	~~81012400~~	~~ELECTRIC CABLE IN TRENCH, 600V, (TRIPLEXED) 2-1/C NO. 4/0 AND 1/C NO. 2/0 GROUND~~	~~FOOT~~	~~6,360~~								~~8000~~	~~360~~
~~X~~	~~83057012~~	~~LIGHT POLE, WOOD, 30 FOOT, CLASS 5~~	~~EACH~~	~~1~~								~~1~~	

FILE NAME = Sm.0.0.dgn	USER NAME = lababidism	DESIGNED -	REVISED -	STATE OF ILLINOIS DEPARTMENT OF TRANSPORTATION	SUMMARY OF QUANTITIES	F.A.I. RTE. 474	SECTION (72, 90)5B)I-2	COUNTY PEO TAZ	TOTAL SHEETS 129 / SHEET NO. 8
		DRAWN -	REVISED -					CONTRACT NO. 68069	
	PLOT SCALE = 100.0000 ' / IN.	CHECKED -	REVISED -		SCALE:	SHEET NO. OF SHEETS	STA. TO STA.	ILLINOIS FED. AID PROJECT	
	PLOT DATE = 2/10/2011	DATE -	REVISED -						

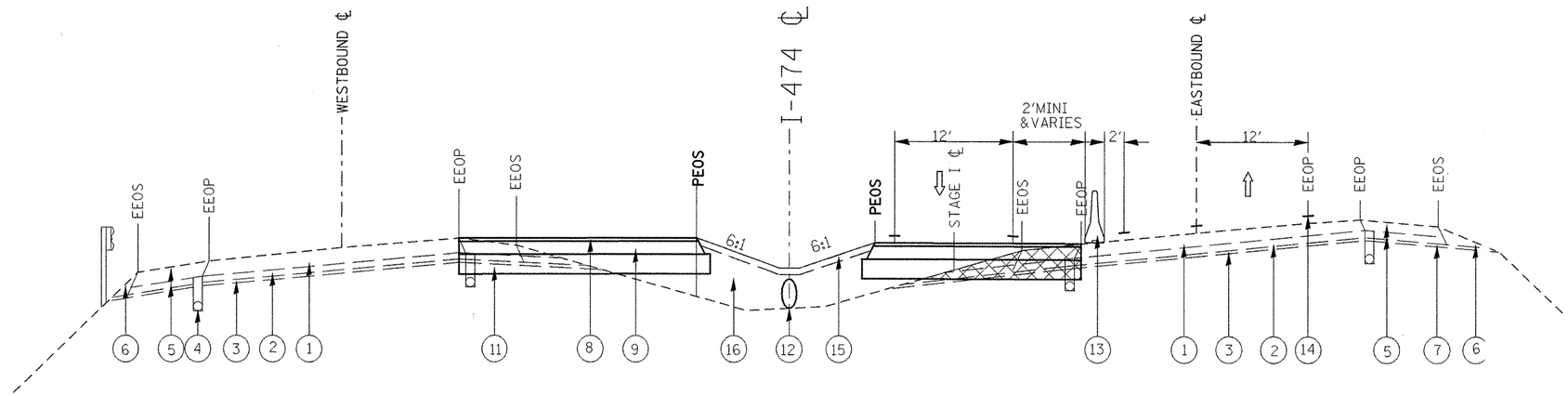

STAGE I EAST
(STA 101+50)

1. EXIST BIT OVERLAY
2. EXIST PCC
3. EXIST STABILIZED SUB-BASE
4. EXIST PTPE UNDERDRAIN 4"
5. EXIST BIT. SHOULDER
6. EXIST AGG. SHOULDERS TYPE B
7. EXIST SUB-BASE GRANULAR MATERIAL TYPE C

8. PROPOSED POLYMERIZED HOT - MIX ASPHALT SURFACE COURSE, MIX "D", N70 2"
9. PROPOSED HOT - MIX ASPHALT BINDER COURSE, IL - 19.0, N70
10. PROPOSED HMA SHOULDER, 10"
11. PROPOSED SUB-BASE GRANULAR MATERIAL TYPE A, 12"
12. PROPOSED PIPE CULVERTS, CLASS D, TYPE 1 24"
13. PROPOSED TEMPORARY CONCRETE BARRIER
14. PROPOSED PAVEMENT MARKINGS
15. PROPOSED TOP SOIL 4"
16. PROPOSED EMBANKMENT

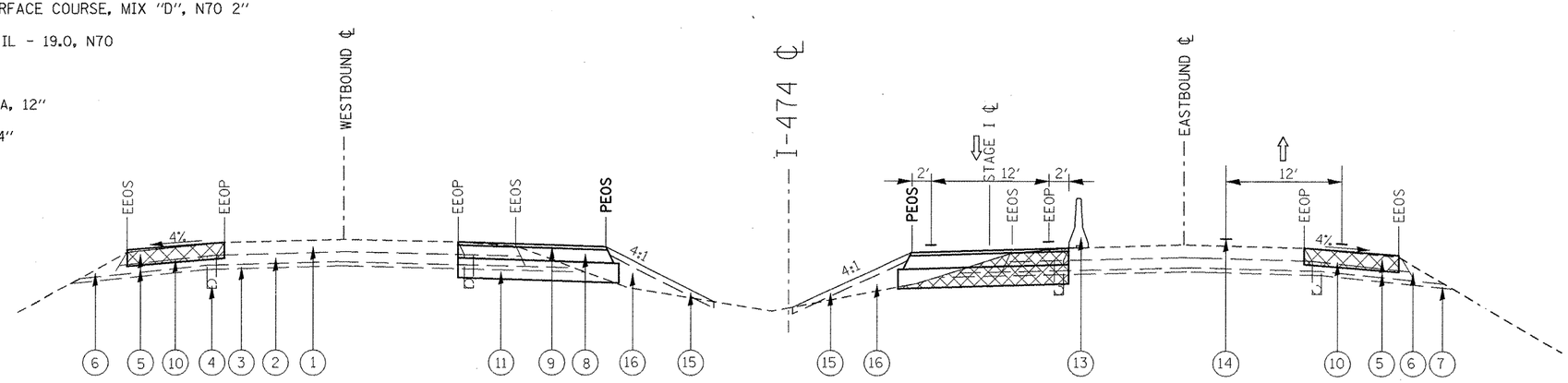

STAGE I WEST
(STA. 59+50)

FILE NAME = Cover sheet_Typicals_GN_Stands_Line Diagram.dgn	USER NAME = lababidsm	DESIGNED -	REVISED -	STATE OF ILLINOIS DEPARTMENT OF TRANSPORTATION	TYPICAL SECTION FOR STAGE I EAST & WEST	F.A.I. RTE.	SECTION	COUNTY	TOTAL SHEETS	SHEET NO.
		DRAWN -	REVISED -			474	((72, 90)5B)I-2	PEO-[illegible]AZ	129	9
	PLOT SCALE = 100.0000 ' / IN.	CHECKED -	REVISED -					CONTRACT NO. 68069		
	PLOT DATE = 2/9/2011	DATE -	REVISED -		SCALE: SHEET NO. OF SHEETS STA. TO STA.			ILLINOIS FED. AID PROJEC		

1. EXIST BIT OVERLAY
2. EXIST PCC
3. EXIST STABILIZED SUB-BASE
4. EXIST PTPE UNDERDRAIN 4"
5. EXIST BIT. SHOULDER
6. EXIST AGG. SHOULDERS TYPE B
7. EXIST SUB-BASE GRANULAR MATERIAL TYPE C

8. PROPOSED POLYMERIZED HOT - MIX ASPHALT SURFACE COURSE, MIX "D", N70 2"
9. PROPOSED HOT - MIX ASPHALT BINDER COURSE, IL - 19.0, N70
10. PROPOSED HMA SHOULDER, 10"
11. PROPOSED SUB-BASE GRANULAR MATERIAL TYPE A, 12"
12. PROPOSED PIPE CULVERTS, CLASS D, TYPE 1 24"
13. PROPOSED TEMPORARY CONCRETE BARRIER
14. PROPOSED PAVEMENT MARKINGS
15. PROPOSED TOP SOIL 4"
16. PROPOSED EMBANKMENT

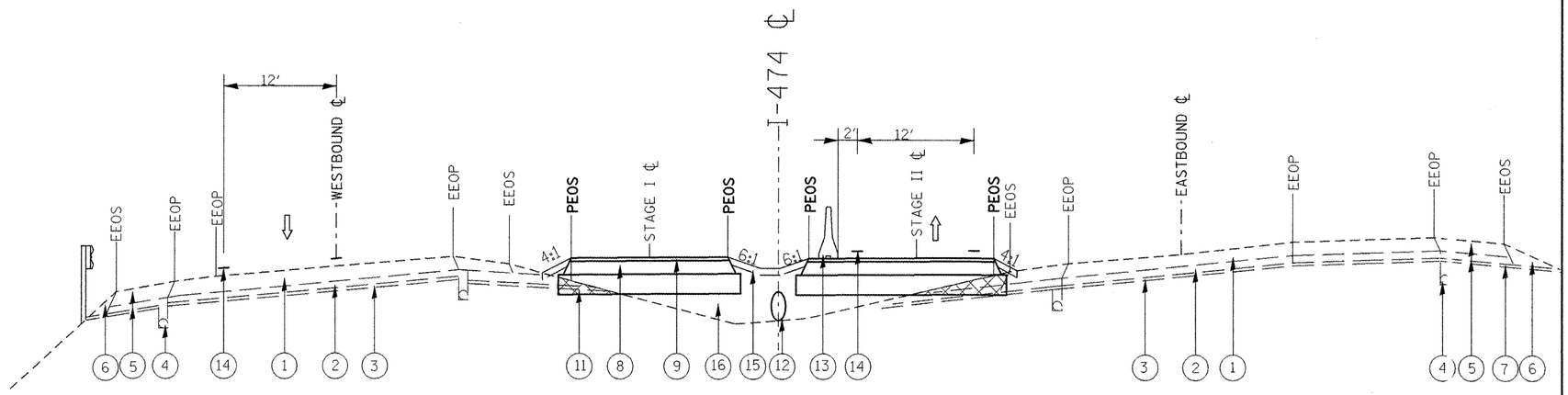

STAGE II EAST
(STA. 101+50)

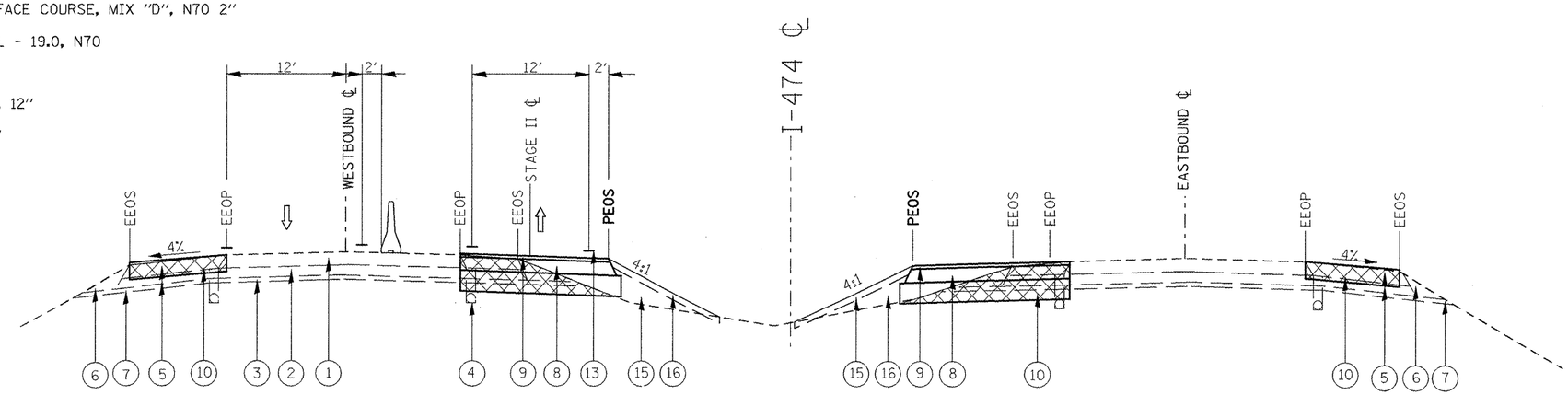

STAGE II WEST
(STA. 59+50)

FILE NAME = Cover sheet_Typicals_GN_StandsLine Diagram.dgn	USER NAME = lababidism	DESIGNED -	REVISED -
		DRAWN -	REVISED -
	PLOT SCALE = 100.0000 ' / IN.	CHECKED -	REVISED -
	PLOT DATE = 2/9/2011	DATE -	REVISED -

STATE OF ILLINOIS
DEPARTMENT OF TRANSPORTATION

TYPICAL SECTIONS FOR STAGE II
EAST & WEST

SCALE: | SHEET NO. OF SHEETS | STA. TO STA.

F.A.I. RTE.	SECTION	COUNTY	TOTAL SHEETS	SHEET NO.
474	(172, 9015BI-2	PEORIA	129	10

CONTRACT NO. 68069

ILLINOIS FED. AID PROJECT

TABULATION OF CROSS OVER AND SHOULDERS HMA QUANTITIES

LOCATION	MEASURED AREA		POLY. BIT. MAT. PRIME COAT *	HOT - MIX ASPHALT BINDER COURSE, IL - 19.0, N70 8"	POLYMERIZED HOT - MIX ASPHALT SURFACE COURSE, MIX "D", N70 2"	HOT - MIX ASPHALT SHOULDERS, 8"	POLYMERIZED HOT - MIX ASPHALT SURFACE COURSE, MIX "E", N70 2"	SUB-BASE GRANULAR MATERIAL, TYPE A
STAGE I WORK	SQFT	SQYD	TONS	TONS	TONS	TONS	TONS	TONS
X-OVER EAST OF STRUCTURE (TAZEWELL COUNTY SIDE - SEE PLANS FOR EXACT STATIONS)	14717	1635	3.66	733	183			1125
OUTSIDE SHOULDERS AT I-474 EASTBOUND - NORTH SHOULDER	1857	206	0.46			95	23	
OUTSIDE SHOULDERS AT I-474 EASTBOUND - SOUTH SHOULDER	1667	185	0.41			85	21	
SUB-TOTAL FOR TAZEWELL COUNTY			4.54			180	44	
X-OVER WEST OF THE STRUCTURE (PEORIA COUNTY SIDE - SEE PLANS FOR EXACT STATIONS)	16050	1783	3.99	799	200			1225
OUTSIDE SHOULDERS AT I-474 WESTBOUND-NORTH SHOULDER	3140	349	0.78			155	39	
OUTSIDE SHOULDERS AT I-474 WESTBOUND-SOUTH SHOULDER	6025	669	1.50			300	75	
SUB-TOTOAL FOR PEORIA COUNTY			6.28			455	114	
TOTAL			11	1535	385	635	160	2350

* THERE WILL BE 3 APPLICATIONS:
1 APPLICATION ON TOP OF SUB-BASE = 0.5 GALLON/SQYD
1 APPLICATION ON TOP OF THE 1ST 4" OF BINDER = 0.03 GALLON/SQYD
1 APPLICATION ON TOP OF THE 2ND 4" OF BINDER = 0.03 GALLON/SQYD

APPLICATION RATES	
FOR ALL HOT MIXES: 112 LBS / SQ YD / IN	
FOR AGGREGATE SHOULDERS TYPE B: 2.05 TON / CU YD	
FOR BITUMINOUS MATERIAL (PRIME COAT):	FOR AGGREGAT (PRIME COAT):
-ON GRANULAR BASE: 0.5 GAL / SQ YD	-ON EXISTING PAVEMENT: 4 LBS / SQ YD
-ON EXISTING PAVEMENT: 0.05 GAL /SQ YD	-ON COLD MILLED SURFACE: 4 LBS / SQ YD
-ON COLD MILLED SURFACE : 0.1 GAL / SQ YD	-ON NEW PAVEMENT: 2 LBS / SQ YD
-ON NEW PAVEMENT: 0.03 GAL / SQ YD	

CONVERSION: (0.004 TON = GALLON) , (2000 LBS = 1 TON)

TABULATION OF CONCRERTE BARRIER QUANTITIES

LOCATION				LENGTH	TEMPORARY CONCRETE BARRIER	TEMPORARY CONCRETE BARRIER (RELOCATE)	TEMPORARY CONCRETE BARRIER (SPECIAL) **
				FT	FT	FT	FT
	STA.	TO	STA.				
STAGE I	Sta 448+20	TO	Sta 449+28	108	108	108	
	Sta 56+07	TO	Sta 101+07	4500	4500	4500	
			TOTAL	4608	4608	4608	
STAGE II	Sta 57+45	TO	Sta 104+07	4662	4662	4662	
			TOTAL	4662			
EAST CROSS OVER	Sta 101+30	TO	Sta 100+50	80			80
WEST CROSS OVER	Sta 58+60	TO	Sta 57+50	110			110
		TO					
			TOTAL		4675 *	4675	190

* USE THE LONGEST OF THE TWO STAGES AND ROUND IT TO THE NEAREST 12.5 SINCE THE BARRIER WALL COMES IN 12.5 FEET SECTIONS
** SEE SPECIAL PROVISION AND PLANS FOR MORE DETAIL

TABULATION OF EARTHWORK QUANTITIES

LOCATION			FURNISHED EXC	TOPSOIL FURNISH & PLACE 4"
			(CU YD)	(SQ YD)
WEST CROSS OVER				1005
STA 448+00	TO	STA 449+00	20	
STA 449+00	TO	STA 57+00	182	
STA 57+00	TO	STA 58+00	150	
STA 58+00	TO	STA 59+00	130	
STA 59+00	TO	STA 60+00	13	
		WEST TOTAL	495	1005
EAST CROSS OVER				755
STA 99+00	TO	STA 100+00	135	
STA 100+00	TO	STA 101+00	150	
STA 101+00	TO	STA 102+00	80	
STA 102+00	TO	STA 103+00	5	
		EAST TOTAL	370	755
		TOTAL	865	1760

TABULATION OF SHOULDER REMOVAL QUANTITIES

	LOCATION			PAVED SHOULDERS REMOVAL (MEASURED AREA)		SAW CUT	SHOULDER RUMBLE STRIP
	STA.	TO	STA.	SQFT	SQYD	FT	FT
EAST OF STRUCTURE	EASTBOUND						
	STA 97+60	TO	STA 100+10	1550	172	250	250
	STA 101+60	TO	STA 104+10	1485	165	250	250
	WESTBOUND						
	STA 97+95	TO	STA 100+05	1270	141	210	210
	STA 101+80	TO	STA 103+50	1005	112	170	170
	NORTH SHOULDERS						
	STA 97+40	TO	STA 99+65	1822	202	225	225
	SOUTH SHOULDERS						
	STA 97+45	TO	STA 99+20	1717	191	175	175
WEST OF STRUCTURE	EASTBOUND						
	STA 448+00	TO	STA 56+97	1275	142	220	220
	STA 58+96	TO	STA 61+26	1372	152	230	230
	WESTBOUND						
	STA 448+22	TO	STA 57+23	2287	254	225	225
	STA 59+10	TO	STA 61+14	1190	132	205	205
	NORTH SHOULDERS						
	STA 59+50	TO	STA 62+65	3075	342	315	315
	SOUTH SHOULDERS						
	STA 56+50	TO	STA 62+80	6115	679	630	630
	TOTAL				2690	3105	3105

TABULATION OF WORK ZONE PAVEMENT MARKING (STAGE I) QUANTITIES

LOCATION			LENGTH	PAVEMENT MARKING TAPE TYPE 3, 4"	WORK ZONE PAVEMENT MARKINGS REMOVAL
			(FT)	(FT)	(SQ FT)
STAGE I WEST BOUND (OUTSIDE)					
448+22	TO	105+00	5000	5000	1667
109+00	TO	112+45	345	345	115
117+53	TO	129+60	1210	1210	403
129+60	TO	135+00	540	540	180
STAGE I WEST BOUND (INSIDE)					
448+22	TO	135+00	8000	8000	2667
STAGE I EAST BOUND (INSIDE)					
419+32	TO	492+32	1000	1000	333
429+32	TO	101+07	6500	6500	2167
448+00	TO	99+44	4500	4500	1500
STAGE I EAST BOUND (OUTSIDE)					
419+32	TO	99+45	7335	7335	2445
STAGE I RAMP C (OUTSIDE)					
105+00	TO	112+50	750	750	250
STAGE I RAMP C (INSIDE)					
109+00	TO	112+20	320	320	107
STAGE I RAMP E (OUTSIDE)					
112+45	TO	121+50	905	905	302
STAGE I RAMP E (INSIDE)					
117+55	TO	121+50	395	395	132
		STAGE I TOTAL	36800	36800	12267

TABULATION OF WORK ZONE PAVEMENT MARKING (STAGE I & II) QUANTITIES

LOCATION	PAVEMENT MARKING TAPE TYPE 3, 4"	WORK ZONE PAVEMENT MARKINGS REMOVAL	PAVEMENT MARKINGS REMOVAL
	FT	(SQ FT)	(SQ FT)
STAGE I	36800	12267	4650
STAGE II	31050	10350	3050
TOTAL	67850	22617	7700

TABULATION OF WORK ZONE PAVEMENT MARKING (STAGE II) QUANTITIES

LOCATION			LENGTH	PAVEMENT MARKING TAPE TYPE 3, 4"	WORK ZONE PAVEMENT MARKINGS REMOVAL
			(FT)	(FT)	(SQ FT)
STAGE II WEST BOUND (OUTSIDE)					
59+90	TO	106+00	4610	4610	1537
108+75	TO	114+23	550	550	183
118+93	TO	135+00	1610	1610	537
STAGE II WEST BOUND (INSIDE)					
57+65	TO	135+00	7735	7735	2578
STAGE II EAST BOUND (INSIDE)					
448+00	TO	111+00	5620	5620	1873
STAGE II EAST BOUND (OUTSIDE)					
428+00	TO	101+56	6680	6680	2227
103+50	TO	111+00	750	750	250
STAGE II RAMP C (OUTSIDE)					
106+00	TO	113+40	740	740	247
STAGE II RAMP C (INSIDE)					
108+75	TO	113+50	475	475	158
STAGE II RAMP D (OUTSIDE)					
101+56	TO	109+00	745	745	248
STAGE II RAMP D (INSIDE)					
103+50	TO	109+00	550	550	183
STAGE II RAMP E (OUTSIDE)					
114+25	TO	121+50	725	725	242
STAGE II RAMP E (INSIDE)					
118+93	TO	121+50	260	260	87
		STAGE II TOTAL	31050	31050	10350

TABULATION OF PAVEMENT MARKINGS AND GROOVING FOR RECESSED PAVEMENT MARKING QUANTITIES

LOCATION	LENGTH	URETHANE								GROOVING			
		4" SOLID		6" SKIP DASH		8" SOLID		12" SOLID		GROOVING FOR RECESSED PAVEMENT MARKING 5"	GROOVING FOR RECESSED PAVEMENT MARKING 7"	GROOVING FOR RECESSED PAVEMENT MARKING 9"	GROOVING FOR RECESSED PAVEMENT MARKING 13"
		WHITE	YELLOW	WHITE	YELLOW	WHITE	YELLOW	WHITE	YELLOW				
	FT	FT	FT	FT	FT	FT	FT	FT	FT	FT	FT	FT	FT
WEST BOUND I-474													
STA 436+00 TO STA 135+00	9225	9225	9225	2310	0					18450	2310		
EAST BOUND I-474													
STA 428+00 TO STA 135+00	10050	10050	10050	2510	0					20100	2510		
IL 29 ON RAMP (RAMP C)													
RAMP AREA	1310	1310	1310							2620			
GORE AREA													
STA 100+70 TO STA 105+60	500					1000						1000	
IL 29 OFF RAMP (RAMP D)													
RAMP AREA	1515	1515	1515							3030			
GORE AREA													
STA 105+75 TO STA 110+80	505					1010		195				1010	195
IL 29 RAMP (RAMP E)													
GORE AREA													
STA 116+00 TO STA 121+90	590					1180						1180	
SUB-TOTAL		22100	22100	4820	0	3190	0	195	0				
TOTAL		44200		4820		3190		195		44200	4820	3190	195

FILE NAME = Quantities for Shcudule and Summary.dgn	USER NAME = lababidism	DESIGNED -	REVISED -	STATE OF ILLINOIS DEPARTMENT OF TRANSPORTATION	SCHEDULE OF QUANTITIES	F.A.I. RTE.	SECTION	COUNTY	TOTAL SHEETS	SHEET NO.
		DRAWN -	REVISED -			474	((72, 90)5B)I-2	PEORIA	129	14
	PLOT SCALE = 100.0000 ' / IN.	CHECKED -	REVISED -					CONTRACT NO. 68069		
	PLOT DATE = 2/9/2011	DATE -	REVISED -		SCALE: SHEET NO. OF SHEETS STA. TO STA.			ILLINOIS FED. AID PROJECT		

TABULATION OF DRAINAGE QUANTITIES

LOCATION				PIPE CULVERTS, CLASS D, TYPE 1 24"	STEEL END SECTION 24"	TRENCH BACKFILL	PIPE CULVERTS, CLASS A, TYPE 1, 8"
				(FT)	(EACH)	(CU YD)	(FT)
WEST CROSS OVER							
STA 56+50	TO	STA 59+25		275	2	16	
STA 56+40	TO	STA 58+00	RT				161.2
			LT				160.8
EAST CROSS OVER							
STA 99+75	TO	STA 101+75		200	2	12	
STA 99+65	TO	STA 100+50	RT				87.5
			LT				87.6
		TOTAL		475	4	28	500

TABULATION OF MOWING QUANTITIES

LOCATION		UNIT
7000 FT NET LENGTH 7,000 FT X 1 UNIT /100 FT X 2 MOWINGS =	14000 FT	140
	TOTAL	140

TABULATION OF TEMPORARY EROSION CONTROL QUANTITIES

LOCATION	PERIMETER EROSION BARRIER	INLET & PIPE PROTECTION
	FOOT	EACH
EAST CROSS OVER	100	2
WEST CROSS OVER	100	2
TOTAL	200	4

TRAFFIC CONTROL & PROTECTION (SPECIAL)

LOCATION	EACH
JOBSITE	1
TOTAL	1

ENGINEERS FIELD OFFICE, TY A

LOCATION	CAL MO
JOBSITE	19
TOTAL	19

MOBILIZATION

LOCATION	LSUM
JOBSITE	2
TOTOAL	2

CONSTRUCTION LAYOUT

LOCATION	L SUM
JOBSITE	1
Total	1

CHANGEABLE MESSAGE SIGN*

LOCATION	CAL MO
I-474 EAST BOUND	15
I-474 WEST BOUND	15
IL-29 NORTH BOUND	15
IL-29 SOUTH BOUND	15
TOTAL	60

*SEE CHANGEABLE MESSAGE SIGN SPECIAL PROVISIONS

TABULATION OF CONDUITS QUANTITIES

ITEM DESCRIPTION	UNIT	TOTAL QTY.
CONDUIT IN TRENCH, 2" DIA., PVC	FOOT	4020
CONDUIT PUSHED, 2" DIA., PVC	FOOT	300
CONDUIT ATTACHED TO STRUCTURE, 1" DIA., GALVANIZED STEEL	FOOT	235
CONDUIT ATTACHED TO STRUCTURE, 1 1/4" DIA., GALVANIZED STEEL	FOOT	240
CONDUIT ATTACHED TO STRUCTURE, 2" DIA., GALVANIZED STEEL	FOOT	5115
JUNCTION BOX, STAINLESS STEEL, ATTACHED TO STRUCTURE, 24" X 24" X 10"	EACH	12
UNIT DUCT, 600V, 2◇1C NO.4, 1/C NO.6 GROUND, (XLP◇TYPE USE)	FOOT	1615
ELECTRIC CABLE IN CONDUIT, 600V (XLP-TYPE USE) 1/C NO. 8	FOOT	3270
ELECTRIC CABLE IN CONDUIT, 600V (XLP-TYPE USE) 1/C NO. 6	FOOT	4634
ELECTRIC CABLE IN CONDUIT, 600V (XLP-TYPE USE) 1/C NO. 4	FOOT	3348
TRENCH AND BACKFILL FOR ELECTRICAL WORK	FOOT	3900
FIBER OPTIC CABLE IN CONDUIT, NO. 62.5/125, 12F	FOOT	4802
CONCRETE FOUNDATION, TYPE E 24◇INCH DIAMETER (SPECIAL)	FOOT	10
CONCRETE FOUNDATION, TYPE E 36 INCH DIAMETER	FOOT	35
DRILL EXISTING HANDHOLE	EACH	3
TRAFFIC COUNTER	EACH	2
CONCRETE FOUNDATION, TYPE 1	FOOT	7
CAMERA POLE, 45 FT	EACH	1
CABINET, MODEL 334	EACH	2
POLE MOUNTED EQUIPMENT CABINET, TYPE B	EACH	7
ETHERNET SWITCH (MATERIAL ONLY)	EACH	18
TRAFFIC SIGNAL POST, SPECIAL	EACH	2
CAT 5 ETHERNET CABLE	FOOT	747
CLOSED-CIRCUIT TELEVISION DOME CAMERA, IP BASED	EACH	9
CLOSED-CIRCUIT TELEVISION DOME CAMERA, IP BASED (MATERIAL ONLY)	EACH	2
CAMERA POLE, 55 FT	EACH	1
ELECTRIC SERVICE INSTALLATION, SPECIAL	EACH	1
FIBER OPTIC CABLE 48 FIBERS, SINGLE MODE	EACH	5254
FIBER OPTIC ETHERNET DROP AND REPEAT SWITCH	EACH	4
COMMUNICATIONS VAULT	EACH	4

STRUCTURE TOTAL BILL OF MATERIAL

Special Provision	Pay Item #	ITEM	UNIT	SUPER	SUB	TOTAL
	44000155	HotMix Ashphalt Surface Removal, 1 1/2"	Sq. Yd.	29961		29961
	50102400	Concrete Removal	Cu. Yd.	115.2		115.2
	50157300	Protective Shield	Sq. Yd.	10734		10734
	50300100	Floor Drains	Each	380		380
	50300255	Concrete Superstructure	Cu. Yd.	136.5		136.5
	50300260	Bridge Deck Grooving	Sq. Yd.	28509		28509
	50300300	Protective Coat	Sq. Yd.	35218		35218
	50500405	Furnishing and Erecting Structural Steel	Pound	10890		10890
	50300530	Floor Drain Extension	Each	389		389
x	50500715	Jack and Remove Existing Bearings	Each	24		24
x	50501130	Structural Steel Repair	Pound	20104		20104
	50606401	Containment and Disposal of Lead Paint Cleaning Residues No. 1	L. Sum	1		1
	50606402	Containment and Disposal of Lead Paint Cleaning Residues No. 2	L. Sum	1		1
	50800205	Reinforcement Bars, Epoxy Coated	Pound	45740		45740
	52000XXX	Finger Plate Expansion Joint	Foot	78		78
	52000110	Preformed Joint Strip Seal	Foot	738		738
	52000600	Fabric Reinforced Elastomeric Trough	Foot	400		400
	52100540	Anchor Bolts, 1 1/2"	Each		96	96
	58700300	Concrete Sealer	Sq. Ft.		1719	1719
x	X0321468	Plug Existing Deck Drains	Each	1331		1331
x	X0322185	Bridge Deck Latex Concrete Overlay, 2 1/4"	Sq. Yd.	29520		29520
x	X0325381	Field Thermal Spraying (Metallizing) Structural Steel No.1	L. Sum	1		1
x	X0325382	Field Thermal Spraying (Metallizing) Structural Steel No.2	L. Sum	1		1
x	X0322559	Bolt Replacement	Each	340		340
x	X0325305	Structural Repair of Concrete (Depth Equal To or Less Than 5 in.)	Sq. Ft.		2798	2798
x	X0325645	High Load Multi-Rotation Bearings, Guided Expansion, 450K	Each	4		4
x	#4002036	High Load Multi-Rotation Bearings, Guided Expansion, 550K	Each	20		20
x	X5080600	Mechanical Splicers	Each	1998		1998
x	Z0016200	Deck Slab Repair (Partial)	Sq. Yd.	58.9		58.9
x	Z0016001	Deck Slab Repair (Full Depth, Type I)	Sq. Yd.	105.6		105.6
x	Z0016002	Deck Slab Repair (Full Depth, Type II)	Sq. Yd.	19.6		19.6
x	#4002037	Bridge Deck Scarification, 3/4"	Sq. Yd.	29961		29961

TABULATION OF LIGHTING QUANTITIES		
ITEM DESCRIPTION	UNIT	TOTAL QTY.
UNIT DUCT, 600V, 2-1C NO.4, 1/C NO.6 GROUND, (XLP-TYPE USE), 1" DIA. POLYETHYLENE	FOOT	360
AERIAL CABLE, 2-1/C NO. 1/0 WITH MESSENGER WIRE	FOOT	1300
ELECTRIC CABLE IN TRENCH, 600V, 2-1/C NO. 4/0 AND 1/C NO. 2/0 GROUND	FOOT	6000
TRENCH AND BACKFILL FOR ELECTRICAL WORK	FOOT	6300
LUMINAIRE, SODIUM VAPOR, MULTI-MOUNT, 400 WATT	EACH	11
LIGHTING CONTROLLER, SPECIAL	EACH	1
LIGHT POLE, WOOD, 30 FOOT, CLASS 5	EACH	1
LIGHT POLE, WOOD, 60 FOOT, CLASS 3	EACH	7
REMOVAL OF TEMPORARY LIGHTING UNITS	EACH	11
LUMINAIRE, SODIUM VAPOR, MULTI-MOUNT, 250 WATT (INSTALL ONLY)	EACH	4

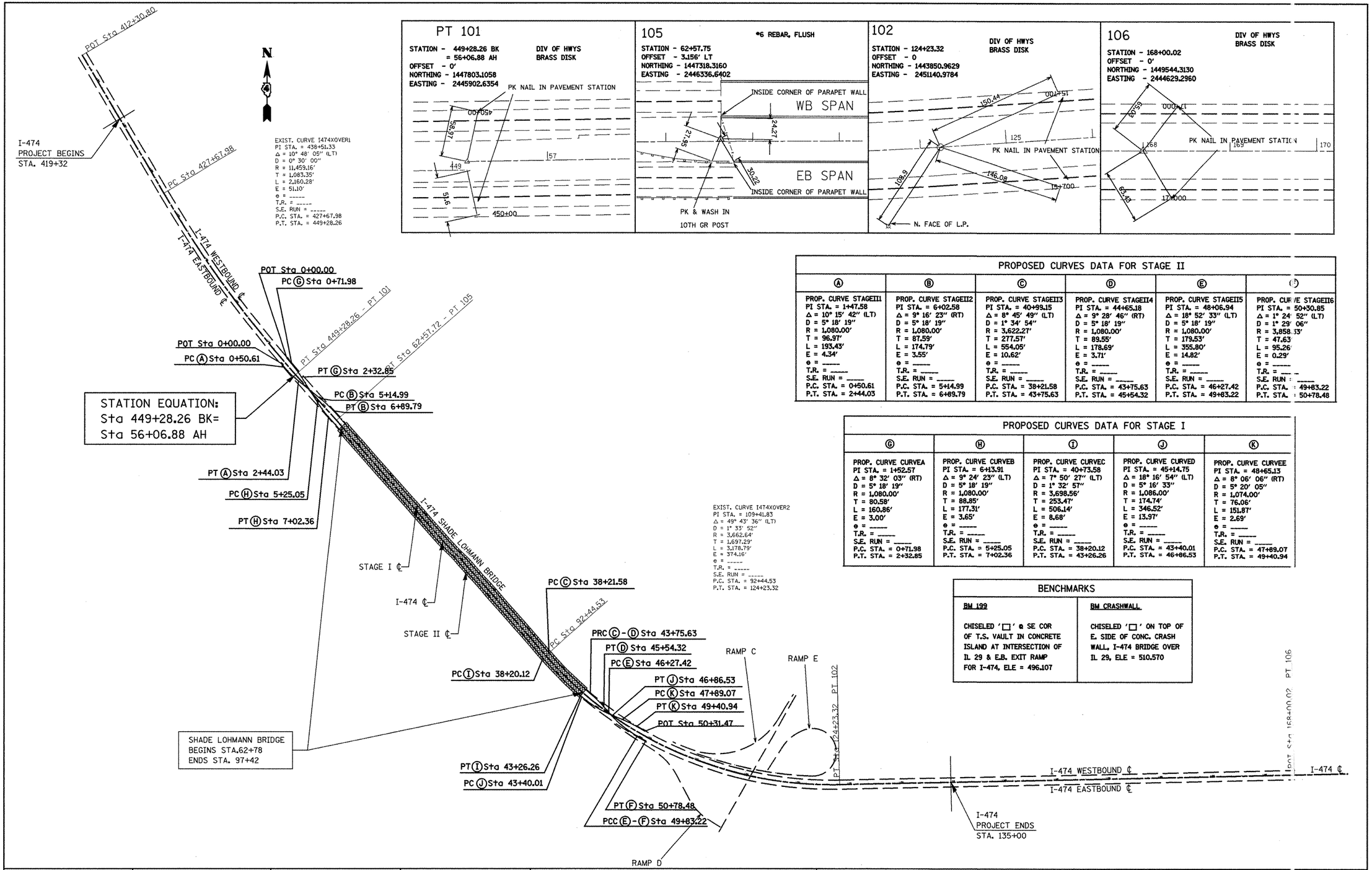

PROPOSED CURVES DATA FOR STAGE II

Ⓐ	Ⓑ	Ⓒ	Ⓓ	Ⓔ	Ⓕ
PROP. CURVE STAGEII1 PI STA. = 1+47.58 Δ = 10° 15' 42" (LT) D = 5° 18' 19" R = 1,080.00' T = 96.97' L = 193.43' E = 4.34' e = ----- T.R. = ----- S.E. RUN = ----- P.C. STA. = 0+50.61 P.T. STA. = 2+44.03	PROP. CURVE STAGEII2 PI STA. = 6+02.58 Δ = 9° 16' 23" (RT) D = 5° 18' 19" R = 1,080.00' T = 87.59' L = 174.79' E = 3.55' e = ----- T.R. = ----- S.E. RUN = ----- P.C. STA. = 5+14.99 P.T. STA. = 6+89.79	PROP. CURVE STAGEII3 PI STA. = 40+99.15 Δ = 8° 45' 49" (LT) D = 1° 34' 54" R = 3,622.27' T = 277.57' L = 554.05' E = 10.62' e = ----- T.R. = ----- S.E. RUN = ----- P.C. STA. = 38+21.58 P.T. STA. = 43+75.63	PROP. CURVE STAGEII4 PI STA. = 44+65.18 Δ = 9° 28' 46" (RT) D = 5° 18' 19" R = 1,080.00' T = 89.55' L = 178.69' E = 3.71' e = ----- T.R. = ----- S.E. RUN = ----- P.C. STA. = 43+75.63 P.T. STA. = 45+54.32	PROP. CURVE STAGEII5 PI STA. = 48+06.94 Δ = 18° 52' 33" (LT) D = 5° 18' 19" R = 1,080.00' T = 179.53' L = 355.80' E = 14.82' e = ----- T.R. = ----- S.E. RUN = ----- P.C. STA. = 46+27.42 P.T. STA. = 49+83.22	PROP. CURVE STAGEII6 PI STA. = 50+30.85 Δ = 1° 24' 52" (LT) D = 1° 29' 06" R = 3,858.13' T = 47.63' L = 95.26' E = 0.29' e = ----- T.R. = ----- S.E. RUN = ----- P.C. STA. = 49+83.22 P.T. STA. = 50+78.48

PROPOSED CURVES DATA FOR STAGE I

Ⓖ	Ⓗ	Ⓘ	Ⓙ	Ⓚ
PROP. CURVE CURVEA PI STA. = 1+52.57 Δ = 8° 32' 03" (RT) D = 5° 18' 19" R = 1,080.00' T = 80.58' L = 160.86' E = 3.00' e = ----- T.R. = ----- S.E. RUN = ----- P.C. STA. = 0+71.98 P.T. STA. = 2+32.85	PROP. CURVE CURVEB PI STA. = 6+13.91 Δ = 9° 24' 23" (LT) D = 5° 18' 19" R = 1,080.00' T = 88.85' L = 177.31' E = 3.65' e = ----- T.R. = ----- S.E. RUN = ----- P.C. STA. = 5+25.05 P.T. STA. = 7+02.36	PROP. CURVE CURVEC PI STA. = 40+73.58 Δ = 7° 50' 27" (LT) D = 1° 32' 57" R = 3,698.56' T = 253.47' L = 506.14' E = 8.68' e = ----- T.R. = ----- S.E. RUN = ----- P.C. STA. = 38+20.12 P.T. STA. = 43+26.26	PROP. CURVE CURVED PI STA. = 45+14.75 Δ = 18° 16' 54" (LT) D = 5° 16' 33" R = 1,086.00' T = 174.74' L = 346.52' E = 13.97' e = ----- T.R. = ----- S.E. RUN = ----- P.C. STA. = 43+40.01 P.T. STA. = 46+86.53	PROP. CURVE CURVEE PI STA. = 48+65.13 Δ = 8° 06' 06" (RT) D = 5° 20' 05" R = 1,074.00' T = 76.06' L = 151.87' E = 2.69' e = ----- T.R. = ----- S.E. RUN = ----- P.C. STA. = 47+89.07 P.T. STA. = 49+40.94

BENCHMARKS

BM 199	BM CRASHWALL
CHISELED '□' @ SE COR OF T.S. VAULT IN CONCRETE ISLAND AT INTERSECTION OF IL 29 & E.B. EXIT RAMP FOR I-474, ELE = 496.107	CHISELED '□' ON TOP OF E. SIDE OF CONC. CRASH WALL, I-474 BRIDGE OVER IL 29, ELE = 510.570

FILE NAME = Cover sheet_Typicals_GN_Stands_Line Diagram.dgn	USER NAME = lababidsn	DESIGNED -	REVISED -
		DRAWN -	REVISED -
	PLOT SCALE = 100.0000 ' / IN.	CHECKED -	REVISED -
	PLOT DATE = 2/9/2011	DATE -	REVISED -

STATE OF ILLINOIS
DEPARTMENT OF TRANSPORTATION

I-474 ALIGNMENT, TIES, AND BENCHMARKS

SCALE: | SHEET NO. OF SHEETS | STA. TO STA.

F.A.I. RTE.	SECTION	COUNTY	TOTAL SHEETS	SHEET NO.
474	(72, 90)5B)I-2	PEORIA	129	18

CONTRACT NO. 68069

ILLINOIS FED. AID PROJECT

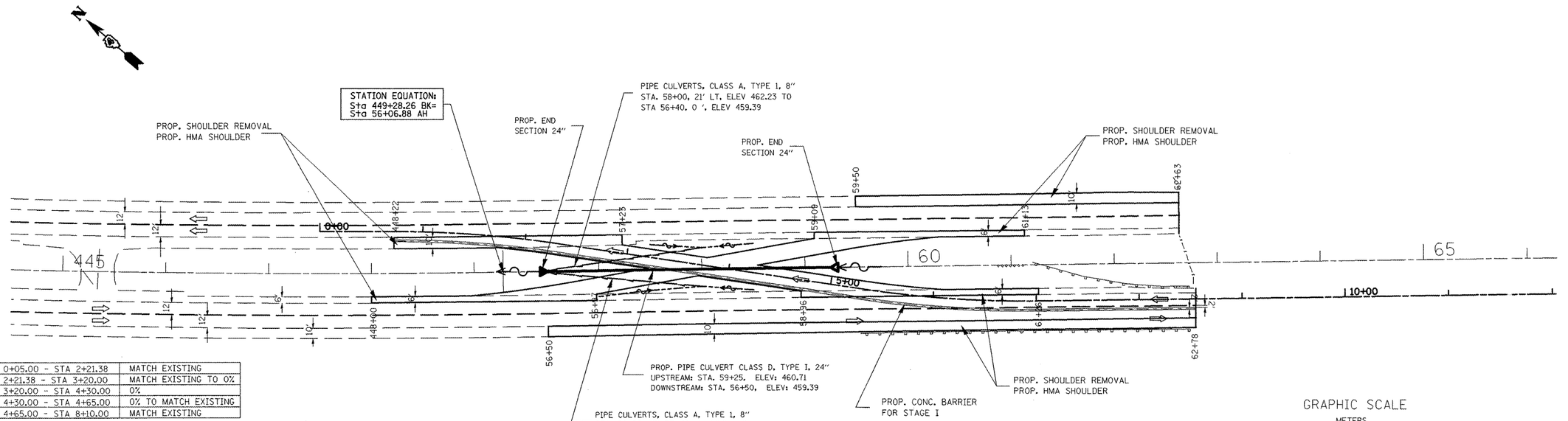

STA 0+05.00 - STA 2+21.38	MATCH EXISTING
STA 2+21.38 - STA 3+20.00	MATCH EXISTING TO 0%
STA 3+20.00 - STA 4+30.00	0%
STA 4+30.00 - STA 4+65.00	0% TO MATCH EXISTING
STA 4+65.00 - STA 8+10.00	MATCH EXISTING

ADJUST TRANSITION LIMITS IN THE FIELD TO PROVIDE FOR SMOOTH TRANSITION BETWEEN STAGE I AND STAGE II PAVEMENT BEING CONSTRUCTED CONCURRENTLY. THE ENGINEER SHALL REVIEW AND APPROVE ALL FIELD ADJUSTMENTS PRIOR TO PLACEMENT.

GRAPHIC SCALE

METERS: 20 0 20 40 60 80 100

FEET: 50 0 50 100 150 200 250

PLAN

SURVEYED ___ BY ___ DATE
PLOTTED ___ BY ___ DATE
ALIGNMENT CHECKED ___ BY ___ DATE
NOTE BOOK ___ NO. ___ BKP FILE NAME ___

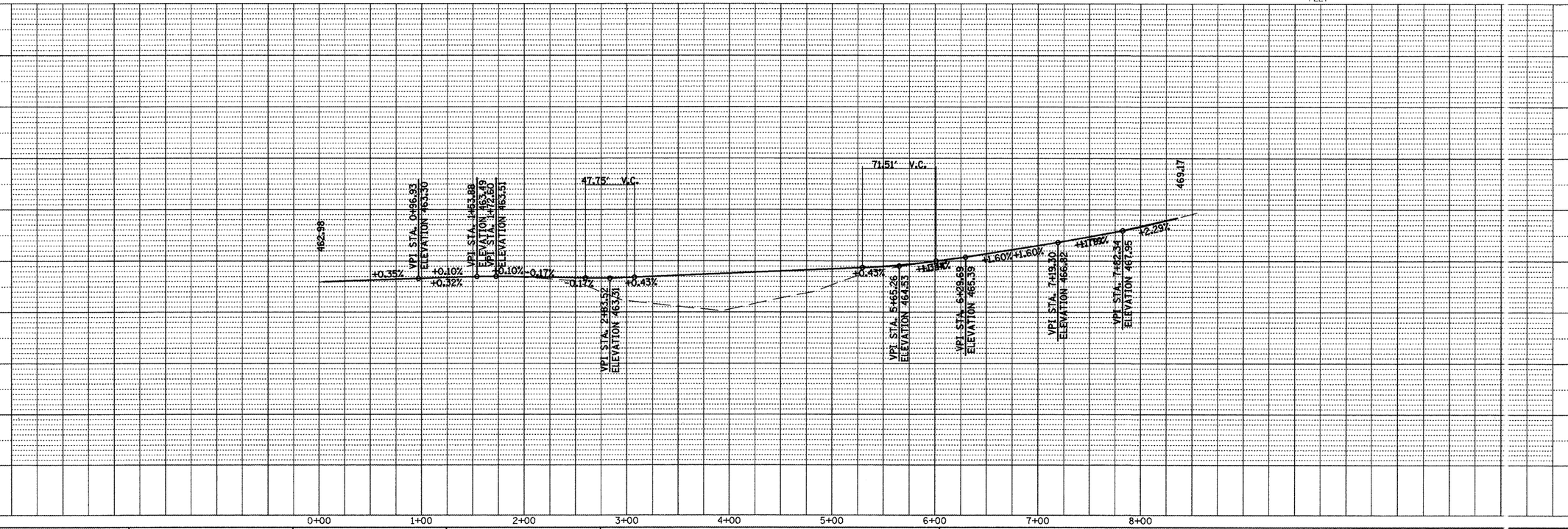

PROFILE

SURVEYED ___ BY ___ DATE
PLOTTED ___ BY ___ DATE
GRADES CHECKED ___ BY ___ DATE
BLM. NOTED ___ BY ___ DATE
STRUCTURE NOTATIONS CHKD ___ BY ___ DATE
NOTE BOOK ___ NO. ___

FILE NAME = Stage I sheets East & West.dgn	USER NAME = lababidism	DESIGNED -	REVISED -	STATE OF ILLINOIS DEPARTMENT OF TRANSPORTATION	MAINTENANCE OF TRAFFIC PLAN AND PROFILE STAGE I WEST			F.A.I. RTE.	SECTION	COUNTY	TOTAL SHEETS	SHEET NO.
		DRAWN -	REVISED -					474	(T2, 90)5B)I-2	PEORIA	129	19
	PLOT SCALE = 100.0000 ' / IN.	CHECKED -	REVISED -							CONTRACT NO. 68069		
	PLOT DATE = 2/9/2011	DATE -	REVISED -		SCALE:	SHEET NO. OF SHEETS	STA. TO STA.			ILLINOIS FED. AID PROJECT		

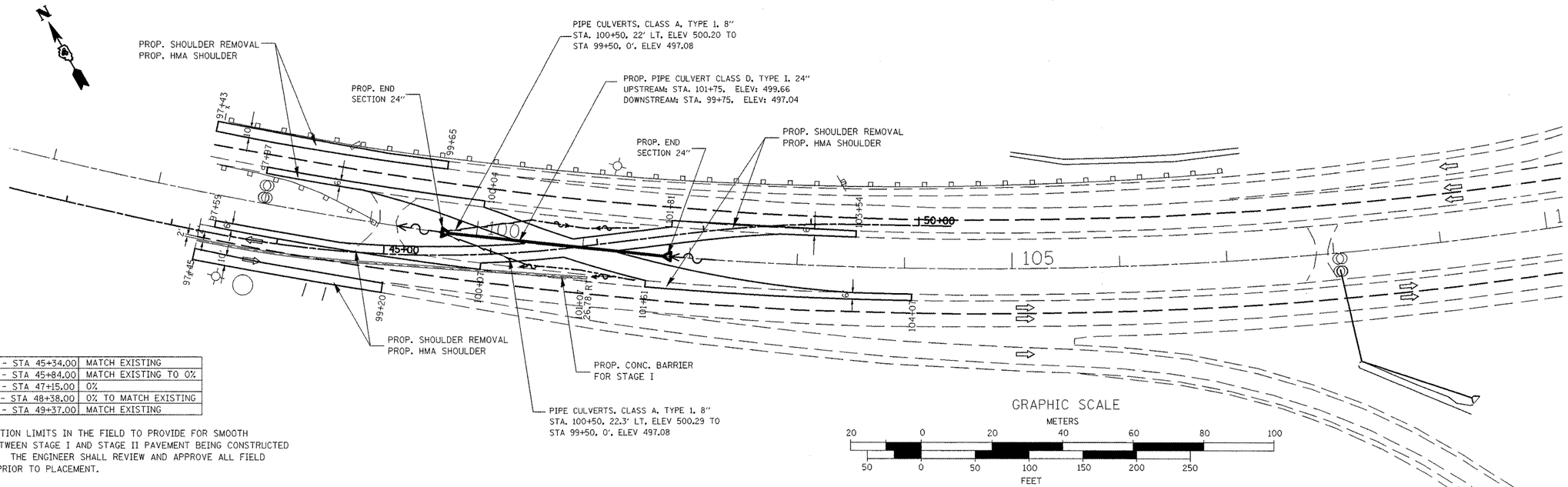

STA 43+40.00 - STA 45+34.00	MATCH EXISTING
STA 45+34.00 - STA 45+84.00	MATCH EXISTING TO 0%
STA 45+84.00 - STA 47+15.00	0%
STA 47+15.00 - STA 48+38.00	0% TO MATCH EXISTING
STA 48+38.00 - STA 49+37.00	MATCH EXISTING

ADJUST TRANSITION LIMITS IN THE FIELD TO PROVIDE FOR SMOOTH TRANSITION BETWEEN STAGE I AND STAGE II PAVEMENT BEING CONSTRUCTED CONCURRENTLY. THE ENGINEER SHALL REVIEW AND APPROVE ALL FIELD ADJUSTMENTS PRIOR TO PLACEMENT.

PLAN
SURVEYED
PLOTTED
ALIGNMENT CHECKED
RT. OF WAY CHECKED
BKG. NOTED
NOTE BOOK
NO.
BY
DATE

PROFILE
SURVEYED
PLOTTED
GRADES CHECKED
B.M. NOTED
STRUCTURE NOTATIONS CHKD
NOTE BOOK
NO.
BY
DATE

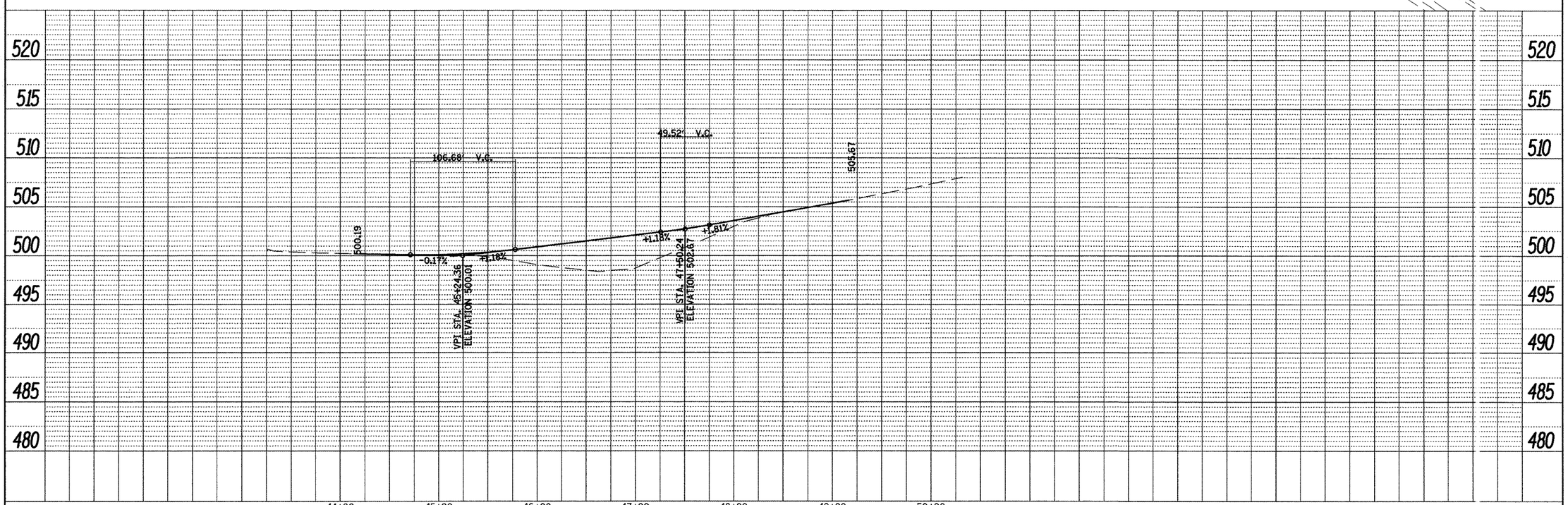

FILE NAME = Stage I sheets East & West.dgn	USER NAME = lababidism	DESIGNED -	REVISED -
		DRAWN -	REVISED -
	PLOT SCALE = 100.0000 ' / IN.	CHECKED -	REVISED -
	PLOT DATE = 2/9/2011	DATE -	REVISED -

STATE OF ILLINOIS
DEPARTMENT OF TRANSPORTATION

MAINTENANCE OF TRAFFIC PLAN AND PROFILE STAGE I EAST

SCALE: | SHEET NO. OF SHEETS | STA. TO STA.

F.A.I. RTE.	SECTION	COUNTY	TOTAL SHEETS	SHEET NO.
474	(172, 90)5B)I-2	PEORIA	129	20
		CONTRACT NO. 68069		
		ILLINOIS FED. AID PROJECT		

PLAN		BY	DATE
NOTE BOOK NO. ____	SURVEYED / PLOTTED / ALIGNMENT CHECKED / RT. OF WAY PLOTTED / CADD FILE NAME ____		

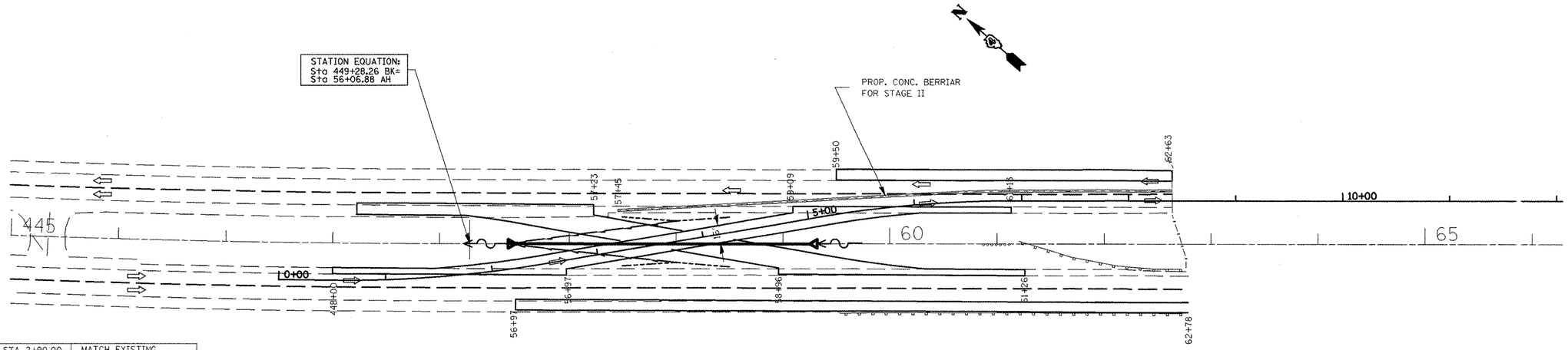

STA 0+05.00 - STA 2+90.00	MATCH EXISTING
STA 2+90.00 - STA 3+22.32	MATCH EXISTING TO 0%
STA 3+22.32 - STA 4+26.41	0%
STA 4+26.41 - STA 4+60.00	0% TO MATCH EXISTING
STA 4+60.00 - STA 8+10.00	MATCH EXISTING

ADJUST TRANSITION LIMITS IN THE FIELD TO PROVIDE FOR SMOOTH TRANSITION BETWEEN STAGE I AND STAGE II PAVEMENT BEING CONSTRUCTED CONCURRENTLY. THE ENGINEER SHALL REVIEW AND APPROVE ALL FIELD ADJUSTMENTS PRIOR TO PLACEMENT.

GRAPHIC SCALE

METERS

20 0 20 40 60 80 100

50 0 50 100 150 200 250

FEET

PROFILE		BY	DATE
NOTE BOOK NO. ____	SURVEYED / PLOTTED / GRADES CHECKED / R.T. OF WAY PLOTTED / STRUCTURE NOTATIONS CHKD		

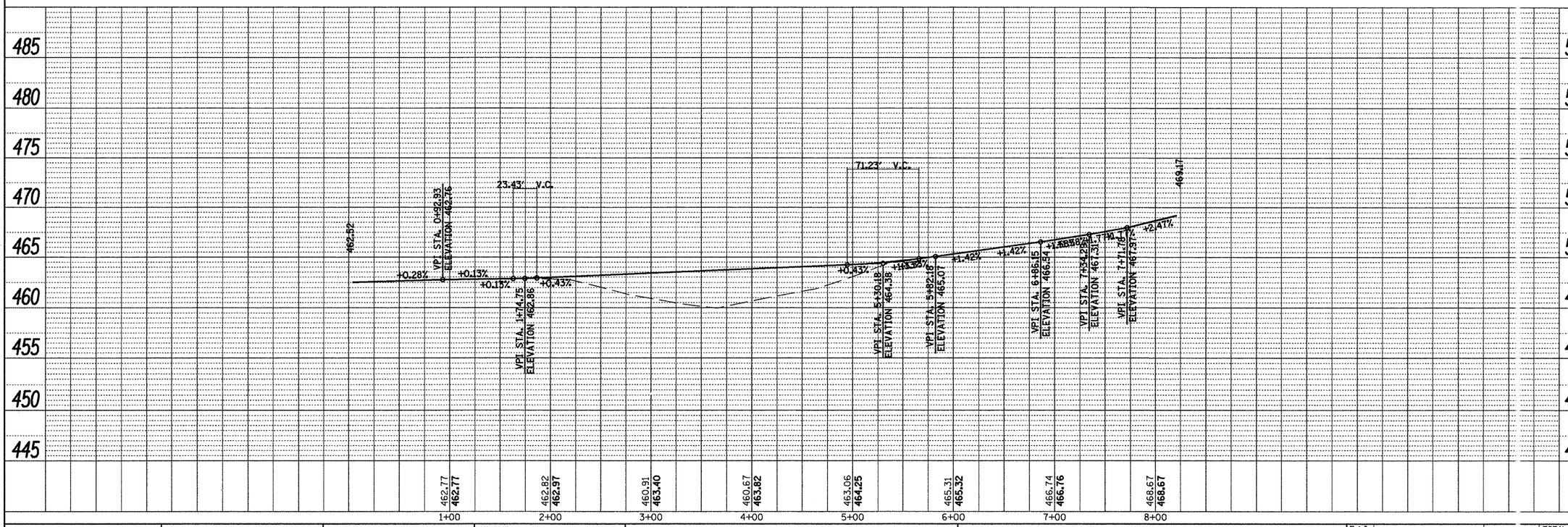

FILE NAME = Stage II sheets East & West.dgn	USER NAME = lababidssm	DESIGNED -	REVISED -
		DRAWN -	REVISED -
	PLOT SCALE = 100.0000 ' / IN.	CHECKED -	REVISED -
	PLOT DATE = 2/9/2011	DATE -	REVISED -

STATE OF ILLINOIS
DEPARTMENT OF TRANSPORTATION

MAINTENANCE OF TRAFFIC PLAN AND PROFILE STAGE II WEST

SCALE: | SHEET NO. OF SHEETS | STA. TO STA.

F.A.I. RTE.	SECTION	COUNTY	TOTAL SHEETS	SHEET NO.
474	(72, 90)5B)1-2	PEO-TAZ	129	21
		CONTRACT NO. 68069		
		ILLINOIS FED. AID PROJECT		

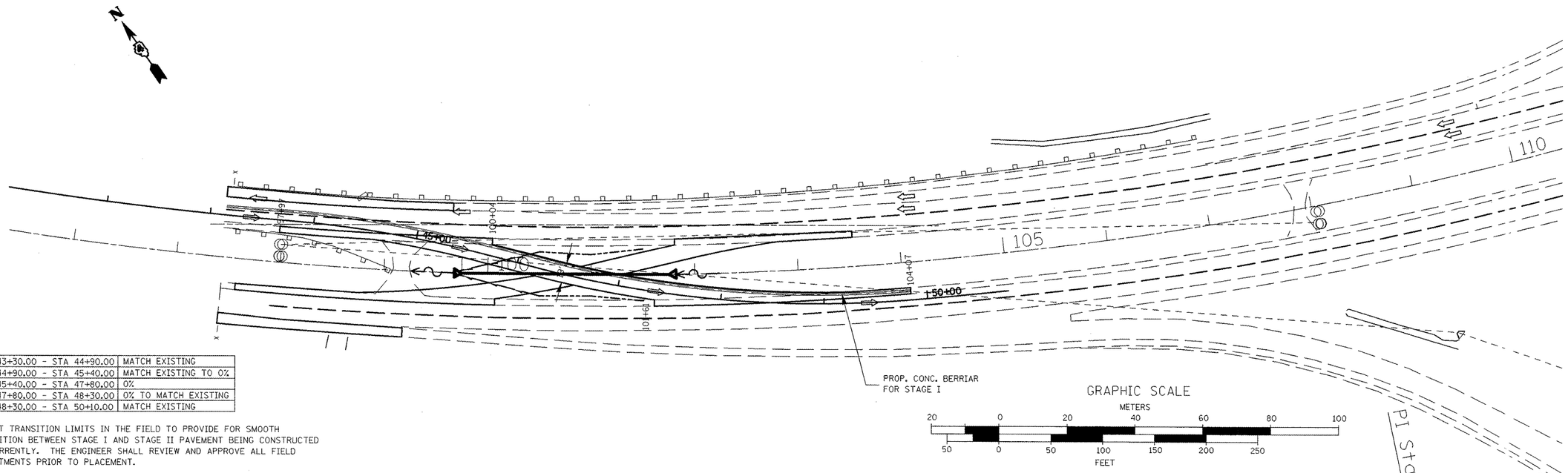

STA 43+30.00 - STA 44+90.00	MATCH EXISTING
STA 44+90.00 - STA 45+40.00	MATCH EXISTING TO 0%
STA 45+40.00 - STA 47+80.00	0%
STA 47+80.00 - STA 48+30.00	0% TO MATCH EXISTING
STA 48+30.00 - STA 50+10.00	MATCH EXISTING

ADJUST TRANSITION LIMITS IN THE FIELD TO PROVIDE FOR SMOOTH TRANSITION BETWEEN STAGE I AND STAGE II PAVEMENT BEING CONSTRUCTED CONCURRENTLY. THE ENGINEER SHALL REVIEW AND APPROVE ALL FIELD ADJUSTMENTS PRIOR TO PLACEMENT.

PLAN — SURVEYED / PLOTTED / ALIGNMENT CHECKED / RT. OF WAY CHECKED / CADD FILE NAME — NOTE BOOK NO. — BY — DATE

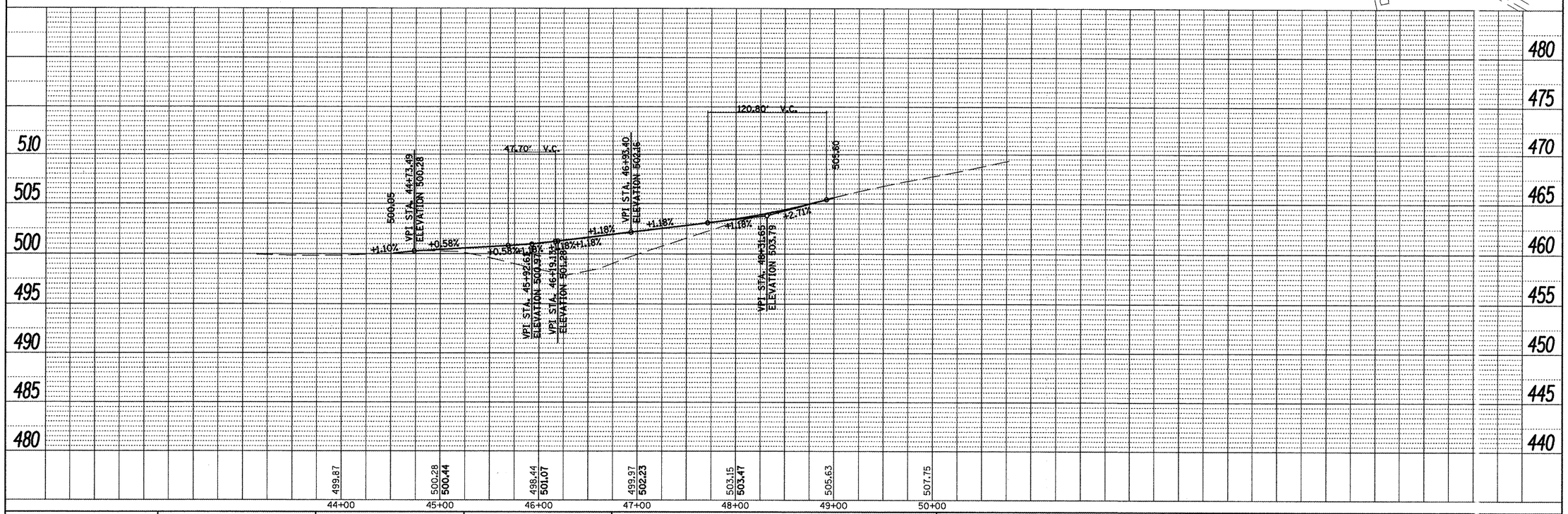

PROFILE — SURVEYED / PLOTTED / GRADES CHECKED / B.M. NOTED / STRUCTURE NOTATNS CHKD — NOTE BOOK NO. — BY — DATE

FILE NAME = Stage II sheets East & West.dgn	USER NAME = lababidism	DESIGNED -	REVISED -
		DRAWN -	REVISED -
	PLOT SCALE = 100.0000 ' / IN.	CHECKED -	REVISED -
	PLOT DATE = 2/9/2011	DATE -	REVISED -

STATE OF ILLINOIS
DEPARTMENT OF TRANSPORTATION

MAINTENANCE OF TRAFFIC PLAN AND PROFILE STAGE II EAST

SCALE: | SHEET NO. OF SHEETS | STA. TO STA.

F.A.I. RTE.	SECTION	COUNTY	TOTAL SHEETS	SHEET NO.
474	(172, 90)5BI-2	PEORIA	129	22

CONTRACT NO. 68069

ILLINOIS FED. AID PROJECT

LEGEND

- WORK AREA
- TYPE III BARRICADE WITH FLASHING LIGHTS
- TEMPORARY CONCRETE BARRIER
- DRUM WITH STEADY BURN MONODIRECTIONAL LIGHT/
- DIRECTION INDICATOR BARRICADE WITH STEADY BURN MONODIRECTIONAL LIGHT
- TYPE II BARRICADE WITH STEADY BURN MONODIRECTIONAL LIGHT
- SIGN
- VERTICAL PANEL (BACK TO BACK)
- ARROW BOARD

PRESTAGE I CONSTRUCTION:

1- CONSTRUCT THE PROPOSED HMA SHOULDERS IN ACCORDANCE WITH HIGHWAY STANDARD 701401 AND AS SHOWN IN THE PLANS
2- INSTALL THE PROPOSED PIPE CULVERTS AT LOCATIONS AS SHOWN IN THE PLANS IN ACCORDANCE WITH HIGHWAY STANDARDS 701400 AND 701401.
3- CONSTRUCT THE CROSS OVER EAST AND WEST OF THE STRUCTURE IN ACCORDANCE WITH HIGHWAY STANDARDS 701400 AND 701401.
4- REMOVE CONFLICTING EXISTING PAVEMENT MARKING LINES, REFLECTORS AND SIGNS UNDER HIGHWAY STANDARD 701426.

STAGE I CONSTRUCTION:

1- CONSTRUCT THE CROSSOVERS FOR BOTHSTAGE I AND II PAVEMENTS IN ACCORDANCE WITH HIGHWAY STANDARDS 701400, 701416 AND AS SHOWN IN THE PLANS.
2- PERFORM STRUCTURAL REHABILITATION ON THE I-474 WESTBOUND.

NOTES:
ALL SIGNS SHALL BE MOUNTED WITH STEADY BURN LIGHTS AT ALL TIMES THROUGHOUT THE DURATION OF CONSTRUCTION. THE COST OF THIS WORK AND ALL SIGNS SHALL BE CONSIDERED AS INCLUDED IN THE CONTRACT COST FOR TRAFFIC CONTROL AND PROTECTION.

N

STAGE I CROSSOVER ALIGNMENT TIE POINTS								
STA.	447+50.00	OFFSET:	-41.18	LT.	=	POT	STA.	0+00.00
STA.	448+22.24	OFFSET:	-40.96	LT.	=	PC	STA.	0+71.98
STA.	56+61.31	OFFSET:	-27.03	LT.	=	PT	STA.	2+32.85
STA.	59+49.90	OFFSET:	20.78	RT.	=	PC	STA.	5+25.05
STA.	61+26.09	OFFSET:	35.34	RT.	=	PT	STA.	7+02.36
STA.	92+43.84	OFFSET:	35.92	RT.	=	PC.	STA.	38+20.12
STA.	97+45.08	OFFSET:	35.92	RT.	=	PT.	STA.	43+26.26
STA.	97+58.69	OFFSET:	35.92	RT.	=	PC	STA.	43+40.01
STA.	101+00.17	OFFSET:	-2.47	LT.	=	PT	STA.	46+86.53
STA.	102+00.82	OFFSET:	-23.9	LT.	=	PC	STA.	47+89.07
STA.	103+53.05	OFFSET:	-39.86	LT.	=	PT	STA.	49+40.94
STA.	104+44.58	OFFSET:	-39.98	LT.	=	POT	STA.	50+31.47

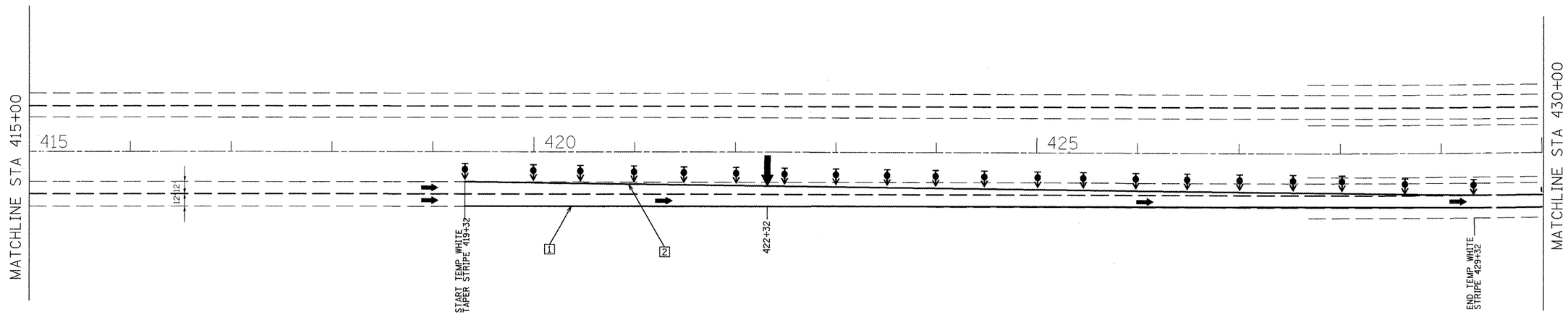

TEMPORARY PAVEMENT MARKING LEGEND

1 PAVEMENT MARKING TAPE, TYPE III - LINE 4" (SOLID WHITE)

2 PAVEMENT MARKING TAPE, TYPE III - LINE 4" (SOLID YELLOW)

FILE NAME = Stage I sheets East & West.dgn	USER NAME = lababidsm	DESIGNED -	REVISED -	STATE OF ILLINOIS DEPARTMENT OF TRANSPORTATION	MAINTENANCE OF TRAFFIC PLAN STAGE I	F.A.I. RTE.	SECTION	COUNTY	TOTAL SHEETS / SHEET NO.
		DRAWN -	REVISED -			474	(72, 90)5B)I-2	PEORIA	129 / 23
	PLOT SCALE = 100.0000 ' / IN.	CHECKED -	REVISED -					CONTRACT NO. 68069	
	PLOT DATE = 2/9/2011	DATE -	REVISED -		SCALE: SHEET NO. OF SHEETS STA. TO STA.			ILLINOIS FED. AID PROJECT	

LEGEND

- WORK AREA
- TYPE III BARRICADE WITH FLASHING LIGHTS
- TEMPORARY CONCRETE BARRIER
- DRUM WITH STEADY BURN MONODIRECTIONAL LIGHT/
- DIRECTION INDICATOR BARRICADE WITH STEADY BURN MONODIRECTIONAL LIGHT
- TYPE II BARRICADE WITH STEADY BURN MONODIRECTIONAL LIGHT
- SIGN
- VERTICAL PANEL (BACK TO BACK)
- ARROW BOARD

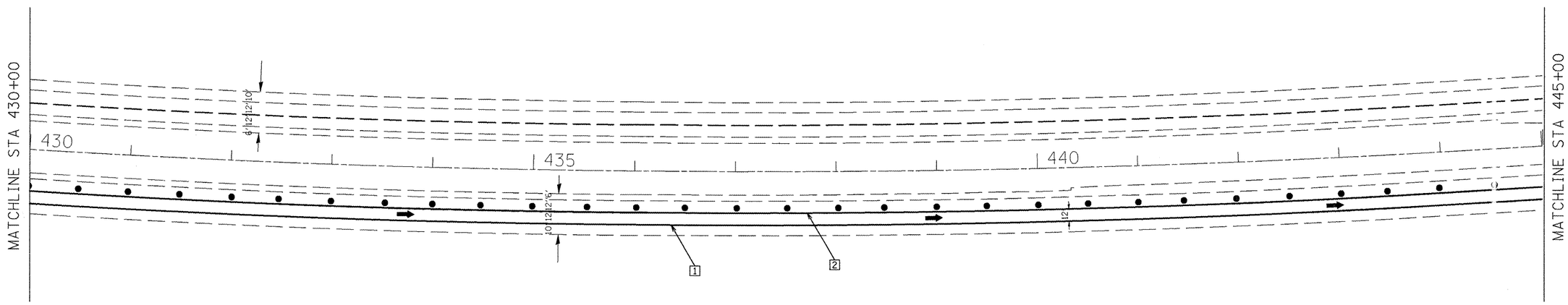

TEMPORARY PAVEMENT MARKING LEGEND

1 PAVEMENT MARKING TAPE, TYPE III - LINE 4" (SOLID WHITE)

2 PAVEMENT MARKING TAPE, TYPE III - LINE 4" (SOLID YELLOW)

FILE NAME = Stage I sheets East & West.dgn	USER NAME = lababidism	DESIGNED -	REVISED -	STATE OF ILLINOIS DEPARTMENT OF TRANSPORTATION	MAINTENANCE OF TRAFFIC PLAN STAGE I	F.A.I. RTE. 474	SECTION ((72, 90)5B)I-2	COUNTY PEORIA	TOTAL SHEETS 129	SHEET NO. 24
		DRAWN -	REVISED -							
	PLOT SCALE = 100.0000 ' / IN.	CHECKED -	REVISED -							
	PLOT DATE = 2/9/2011	DATE -	REVISED -		SCALE: SHEET NO. OF SHEETS STA. TO STA.			ILLINOIS FED. AID PROJECT	CONTRACT NO. 68069	

LEGEND

- WORK AREA
- TYPE III BARRICADE WITH FLASHING LIGHTS
- TEMPORARY CONCRETE BARRIER
- DRUM WITH STEADY BURN MONODIRECTIONAL LIGHT/
- DIRECTION INDICATOR BARRICADE WITH STEADY BURN MONODIRECTIONAL LIGHT
- TYPE II BARRICADE WITH STEADY BURN MONODIRECTIONAL LIGHT
- SIGN
- VERTICAL PANEL (BACK TO BACK)
- ARROW BOARD

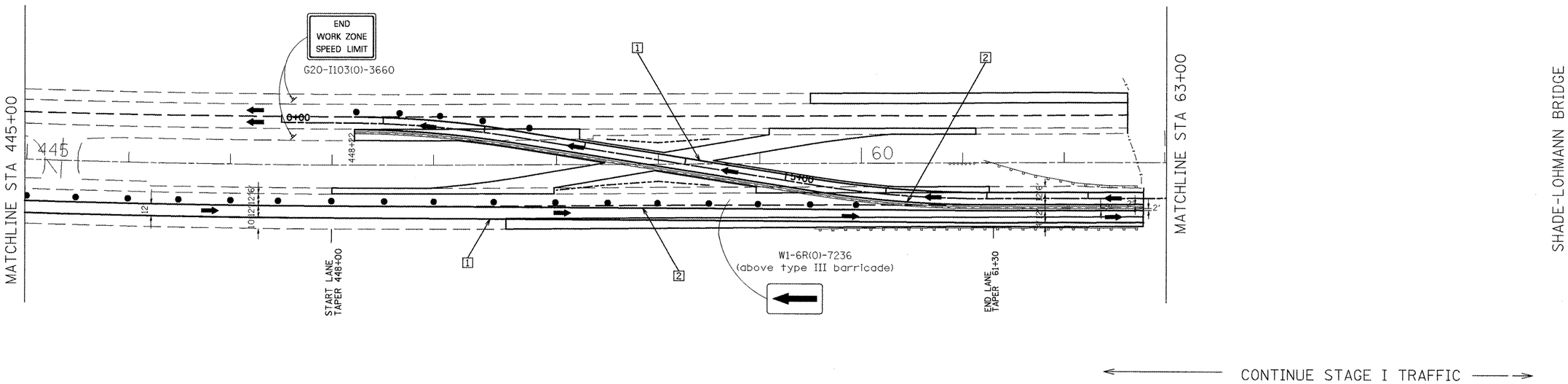

TEMPORARY PAVEMENT MARKING LEGEND

1. PAVEMENT MARKING TAPE, TYPE III - LINE 4" (SOLID WHITE)
2. PAVEMENT MARKING TAPE, TYPE III - LINE 4" (SOLID YELLOW)

FILE NAME = Stage I sheets East & West.dgn	USER NAME = lababidism	DESIGNED -	REVISED -	STATE OF ILLINOIS DEPARTMENT OF TRANSPORTATION	MAINTENANCE OF TRAFFIC PLAN STAGE I	F.A.I. RTE.	SECTION	COUNTY	TOTAL SHEETS	SHEET NO.
		DRAWN -	REVISED -			474	(72, 90)5B)I-2	PEORIA	129	25
	PLOT SCALE = 100.0000 ' / IN.	CHECKED -	REVISED -					CONTRACT NO. 68069		
	PLOT DATE = 2/9/2011	DATE -	REVISED -		SCALE: SHEET NO. OF SHEETS STA. TO STA.			ILLINOIS FED. AID PROJECT		

LEGEND

- WORK AREA
- TYPE III BARRICADE WITH FLASHING LIGHTS
- TEMPORARY CONCRETE BARRIER
- DRUM WITH STEADY BURN MONODIRECTIONAL LIGHT/
- DIRECTION INDICATOR BARRICADE WITH STEADY BURN MONODIRECTIONAL LIGHT
- TYPE II BARRICADE WITH STEADY BURN MONODIRECTIONAL LIGHT
- SIGN
- VERTICAL PANEL (BACK TO BACK)
- ARROW BOARD

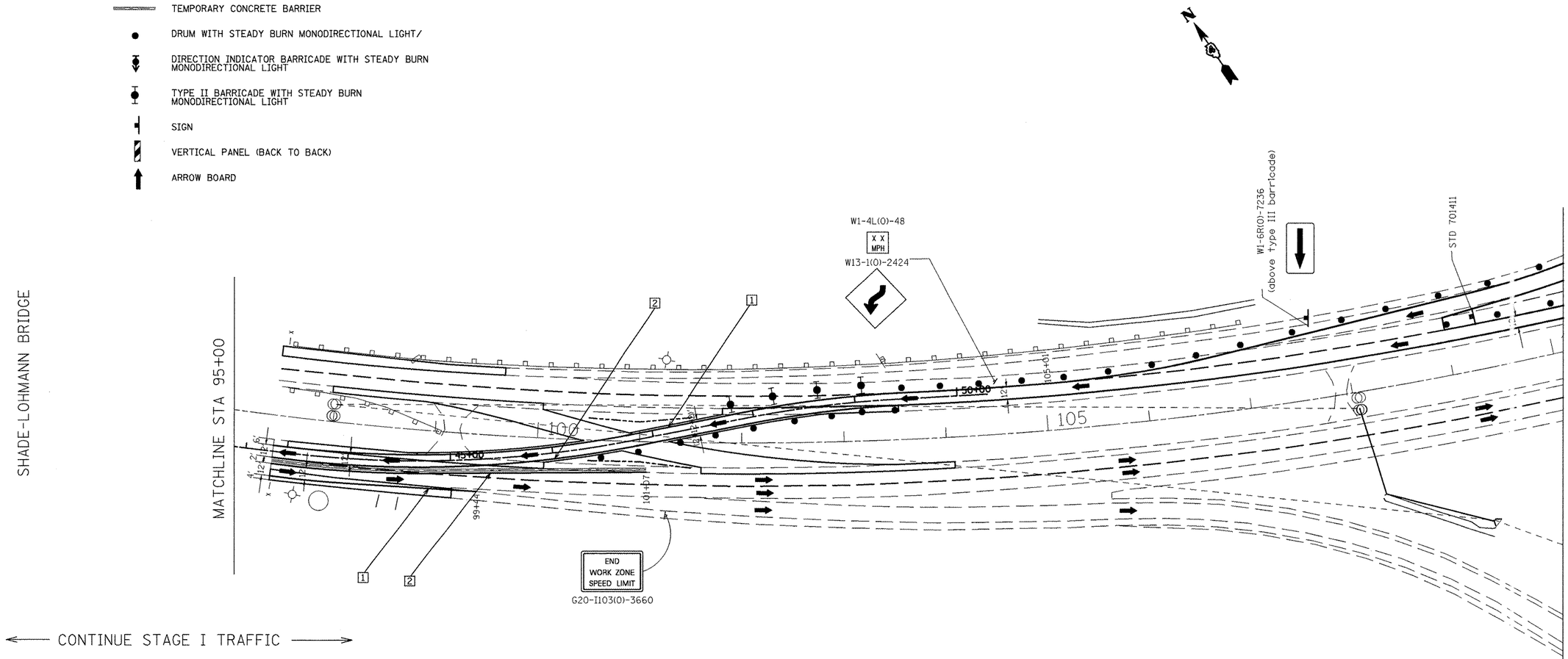

TEMPORARY PAVEMENT MARKING LEGEND

1. PAVEMENT MARKING TAPE, TYPE III - LINE 4" (SOLID WHITE)
2. PAVEMENT MARKING TAPE, TYPE III - LINE 4" (SOLID YELLOW)

FILE NAME = Stage I sheets East & West.dgn	USER NAME = lababidsm	DESIGNED -	REVISED -	STATE OF ILLINOIS DEPARTMENT OF TRANSPORTATION	MAINTENANCE OF TRAFFIC PLAN STAGE I	F.A.I. RTE.	SECTION	COUNTY	TOTAL SHEETS	SHEET NO.
		DRAWN -	REVISED -			474	(72, 90)SB)I-2	PEORIA	127	26
	PLOT SCALE = 100.0000 ' / IN.	CHECKED -	REVISED -		SCALE: SHEET NO. OF SHEETS STA. TO STA.			CONTRACT NO. 68069		
	PLOT DATE = 2/9/2011	DATE -	REVISED -					ILLINOIS FED. AID PROJECT		

LEGEND

- WORK AREA
- TYPE III BARRICADE WITH FLASHING LIGHTS
- TEMPORARY CONCRETE BARRIER
- DRUM WITH STEADY BURN MONODIRECTIONAL LIGHT/
- DIRECTION INDICATOR BARRICADE WITH STEADY BURN MONODIRECTIONAL LIGHT
- TYPE II BARRICADE WITH STEADY BURN MONODIRECTIONAL LIGHT
- SIGN
- VERTICAL PANEL (BACK TO BACK)
- ARROW BOARD

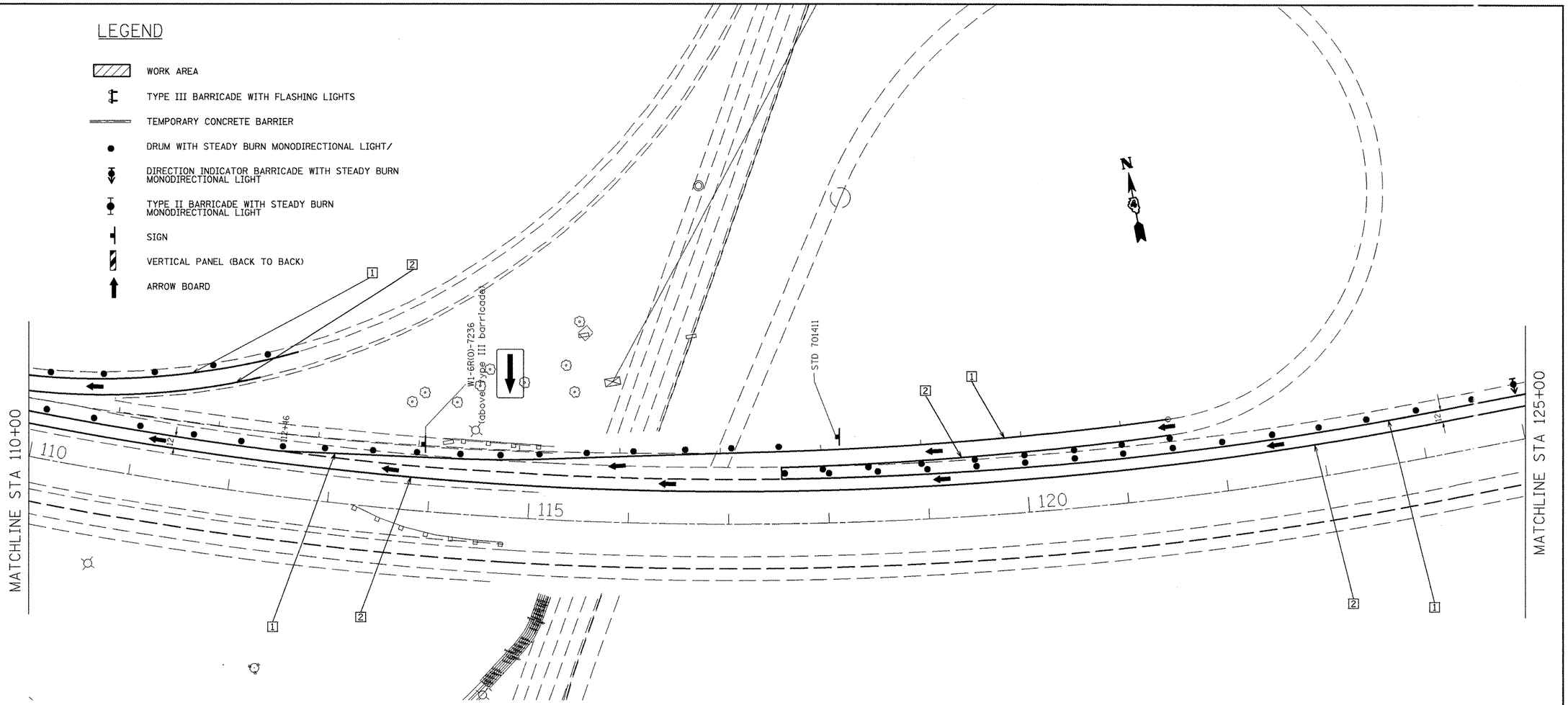

TEMPORARY PAVEMENT MARKING LEGEND

1 PAVEMENT MARKING TAPE, TYPE III - LINE 4" (SOLID WHITE)

2 PAVEMENT MARKING TAPE, TYPE III - LINE 4" (SOLID YELLOW)

FILE NAME = Stage I sheets East & West.dgn	USER NAME = lababidism	DESIGNED -	REVISED -	STATE OF ILLINOIS DEPARTMENT OF TRANSPORTATION	MAINTENANCE OF TRAFFIC PLAN STAGE I	F.A.I. RTE.	SECTION	COUNTY	TOTAL SHEETS	SHEET NO.
		DRAWN -	REVISED -			474	(172, 90)5B)I-2	PEORIA	129	77
	PLOT SCALE = 100.0000 ' / IN.	CHECKED -	REVISED -					CONTRACT NO. 68069		
	PLOT DATE = 2/9/2011	DATE -	REVISED -		SCALE: SHEET NO. OF SHEETS STA. TO STA.			ILLINOIS FED. AID PROJECT		

LEGEND

- WORK AREA
- TYPE III BARRICADE WITH FLASHING LIGHTS
- TEMPORARY CONCRETE BARRIER
- DRUM WITH STEADY BURN MONODIRECTIONAL LIGHT/
- DIRECTION INDICATOR BARRICADE WITH STEADY BURN MONODIRECTIONAL LIGHT
- TYPE II BARRICADE WITH STEADY BURN MONODIRECTIONAL LIGHT
- SIGN
- VERTICAL PANEL (BACK TO BACK)
- ARROW BOARD

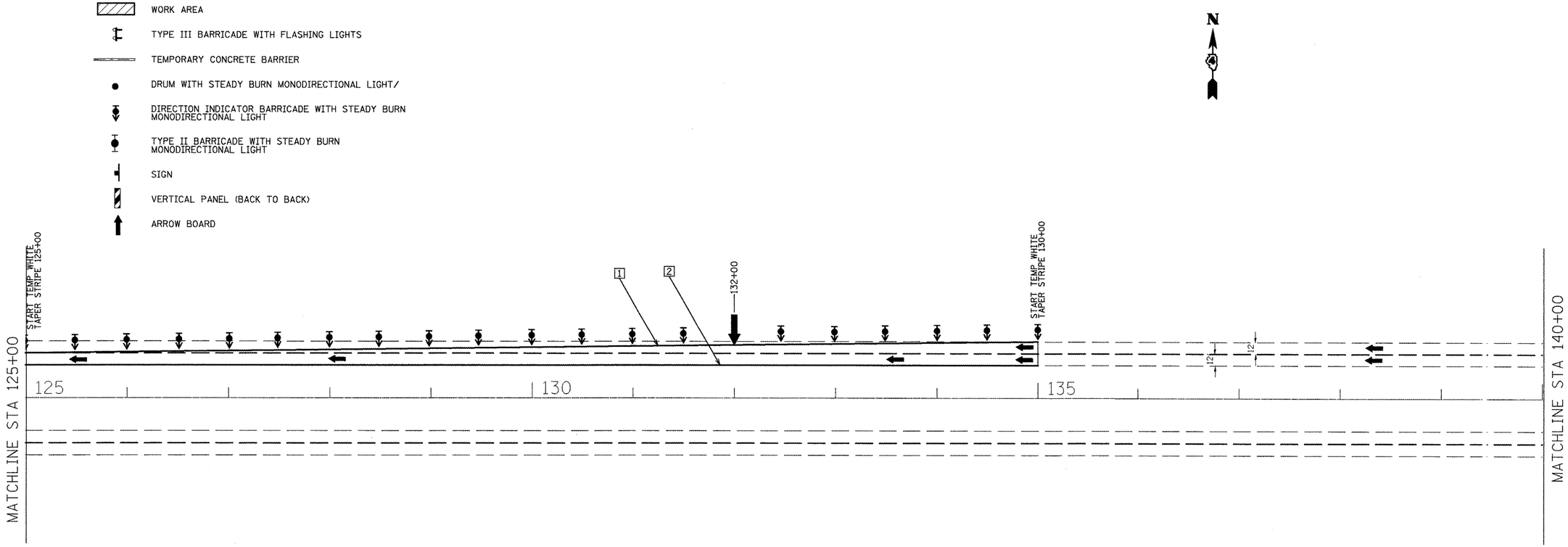

TEMPORARY PAVEMENT MARKING LEGEND

1 PAVEMENT MARKING TAPE, TYPE III - LINE 4" (SOLID WHITE)

2 PAVEMENT MARKING TAPE, TYPE III - LINE 4" (SOLID YELLOW)

FILE NAME = Stage I sheets East & West.dgn	USER NAME = lababidism	DESIGNED -	REVISED -	STATE OF ILLINOIS DEPARTMENT OF TRANSPORTATION	MAINTENANCE OF TRAFFIC PLAN STAGE I	F.A.I. RTE.	SECTION	COUNTY	TOTAL SHEETS	SHEET NO.
		DRAWN -	REVISED -			474	((72, 90)5B)I-2	PEORIA	129	28
	PLOT SCALE = 100.0000 ' / IN.	CHECKED -	REVISED -					CONTRACT NO. 68069		
	PLOT DATE = 2/9/2011	DATE -	REVISED -		SCALE: SHEET NO. OF SHEETS STA. TO STA.			ILLINOIS FED. AID PROJECT		

LEGEND

- WORK AREA
- TYPE III BARRICADE WITH FLASHING LIGHTS
- TEMPORARY CONCRETE BARRIER
- DRUM WITH STEADY BURN MONODIRECTIONAL LIGHT/
- DIRECTION INDICATOR BARRICADE WITH STEADY BURN MONODIRECTIONAL LIGHT
- TYPE II BARRICADE WITH STEADY BURN MONODIRECTIONAL LIGHT
- SIGN
- VERTICAL PANEL (BACK TO BACK)
- ARROW BOARD

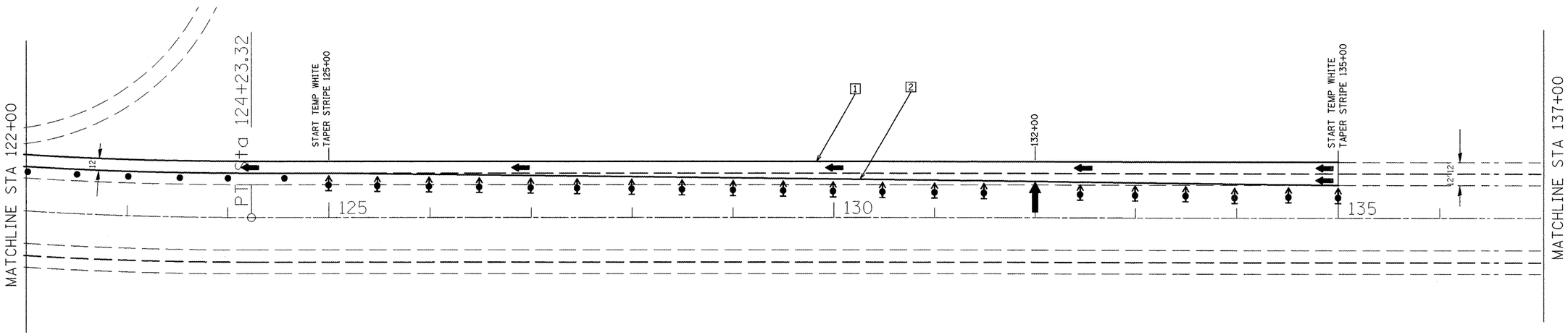

TEMPORARY PAVEMENT MARKING LEGEND

1 PAVEMENT MARKING TAPE, TYPE III - LINE 4" (SOLID WHITE)

2 PAVEMENT MARKING TAPE, TYPE III - LINE 4" (SOLID YELLOW)

FILE NAME = Stage II sheets East & West.dgn	USER NAME = lababidsm	DESIGNED -	REVISED -	STATE OF ILLINOIS DEPARTMENT OF TRANSPORTATION	MAINTENANCE OF TRAFFIC PLAN STAGE II	F.A.I. RTE.	SECTION	COUNTY	TOTAL SHEETS	SHEET NO.
		DRAWN -	REVISED -			474	((72, 90)5B)I-2	PEORIA	129	29
	PLOT SCALE = 100.0000 ' / IN.	CHECKED -	REVISED -					CONTRACT NO. 68069		
	PLOT DATE = 2/9/2011	DATE -	REVISED -		SCALE: SHEET NO. OF SHEETS STA. TO STA.			ILLINOIS FED. AID PROJECT		

LEGEND

- WORK AREA
- TYPE III BARRICADE WITH FLASHING LIGHTS
- TEMPORARY CONCRETE BARRIER
- DRUM WITH STEADY BURN MONODIRECTIONAL LIGHT/
- DIRECTION INDICATOR BARRICADE WITH STEADY BURN MONODIRECTIONAL LIGHT
- TYPE II BARRICADE WITH STEADY BURN MONODIRECTIONAL LIGHT
- SIGN
- VERTICAL PANEL (BACK TO BACK)
- ARROW BOARD

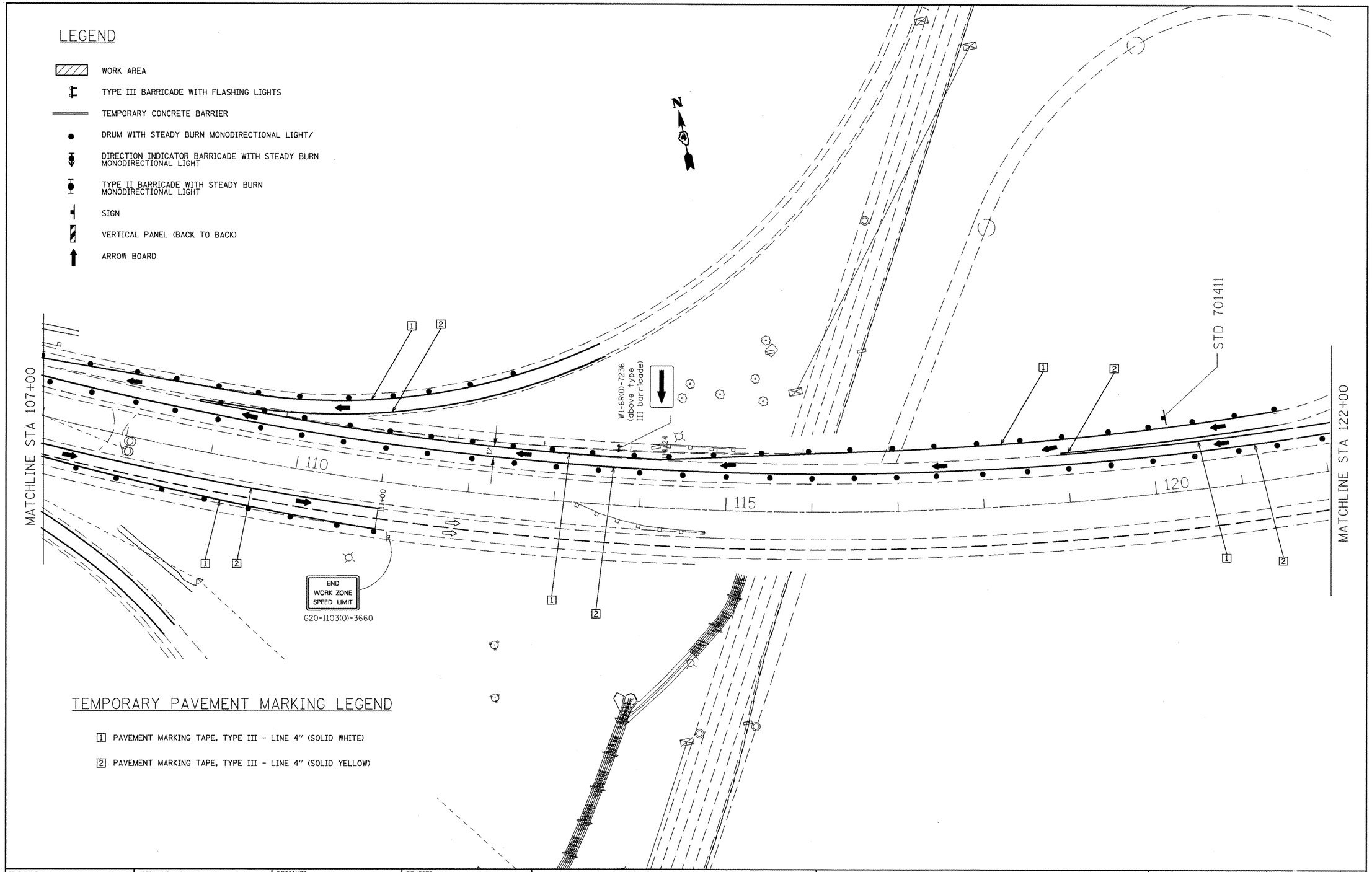

TEMPORARY PAVEMENT MARKING LEGEND

1 PAVEMENT MARKING TAPE, TYPE III - LINE 4" (SOLID WHITE)

2 PAVEMENT MARKING TAPE, TYPE III - LINE 4" (SOLID YELLOW)

FILE NAME = Stage II sheets East & West.dgn	USER NAME = lababidsm	DESIGNED -	REVISED -
		DRAWN -	REVISED -
	PLOT SCALE = 100.0000 ' / IN.	CHECKED -	REVISED -
	PLOT DATE = 2/9/2011	DATE -	REVISED -

STATE OF ILLINOIS
DEPARTMENT OF TRANSPORTATION

MAINTENANCE OF TRAFFIC PLAN STAGE II

SCALE: | SHEET NO. OF SHEETS | STA. TO STA.

F.A.I. RTE.	SECTION	COUNTY	TOTAL SHEETS	SHEET NO.
474	(T2, 90)5B)I-2	PEO-TAZ	129	30

CONTRACT NO. 68069

ILLINOIS FED. AID PROJEC

LEGEND

- WORK AREA
- TYPE III BARRICADE WITH FLASHING LIGHTS
- TEMPORARY CONCRETE BARRIER
- DRUM WITH STEADY BURN MONODIRECTIONAL LIGHT/
- DIRECTION INDICATOR BARRICADE WITH STEADY BURN MONODIRECTIONAL LIGHT
- TYPE II BARRICADE WITH STEADY BURN MONODIRECTIONAL LIGHT
- SIGN
- VERTICAL PANEL (BACK TO BACK)
- ARROW BOARD

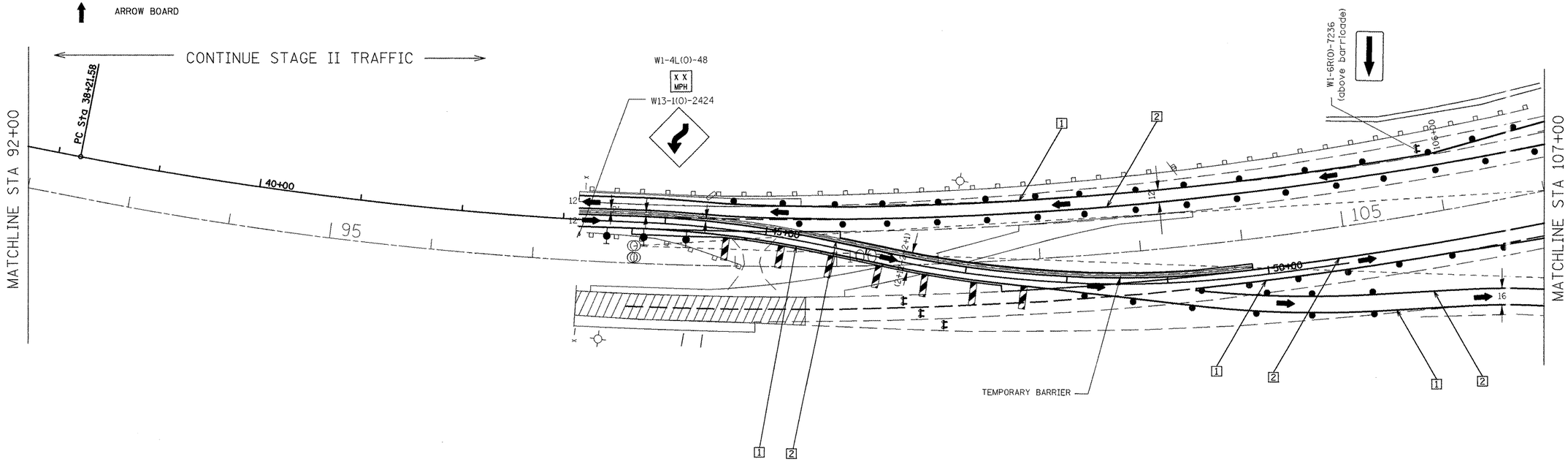

TEMPORARY PAVEMENT MARKING LEGEND

1 PAVEMENT MARKING TAPE, TYPE III - LINE 4" (SOLID WHITE)

2 PAVEMENT MARKING TAPE, TYPE III - LINE 4" (SOLID YELLOW)

FILE NAME = Stage II sheets East & West.dgn	USER NAME = lababidism	DESIGNED -	REVISED -	STATE OF ILLINOIS DEPARTMENT OF TRANSPORTATION	MAINTENANCE OF TRAFFIC PLAN STAGE II			F.A.I. RTE.	SECTION	COUNTY	TOTAL SHEETS / SHEET NO.
		DRAWN -	REVISED -					474	(172, 9015B)I-2	PEORIA	129 / 31
	PLOT SCALE = 100.0000 ' / IN.	CHECKED -	REVISED -							CONTRACT NO. 68069	
	PLOT DATE = 2/9/2011	DATE -	REVISED -		SCALE:	SHEET NO. OF SHEETS	STA. TO STA.			ILLINOIS FED. AID PROJECT	

LEGEND

- WORK AREA
- TYPE III BARRICADE WITH FLASHING LIGHTS
- TEMPORARY CONCRETE BARRIER
- DRUM WITH STEADY BURN MONODIRECTIONAL LIGHT/
- DIRECTION INDICATOR BARRICADE WITH STEADY BURN MONODIRECTIONAL LIGHT
- TYPE II BARRICADE WITH STEADY BURN MONODIRECTIONAL LIGHT
- SIGN
- VERTICAL PANEL (BACK TO BACK)
- ARROW BOARD

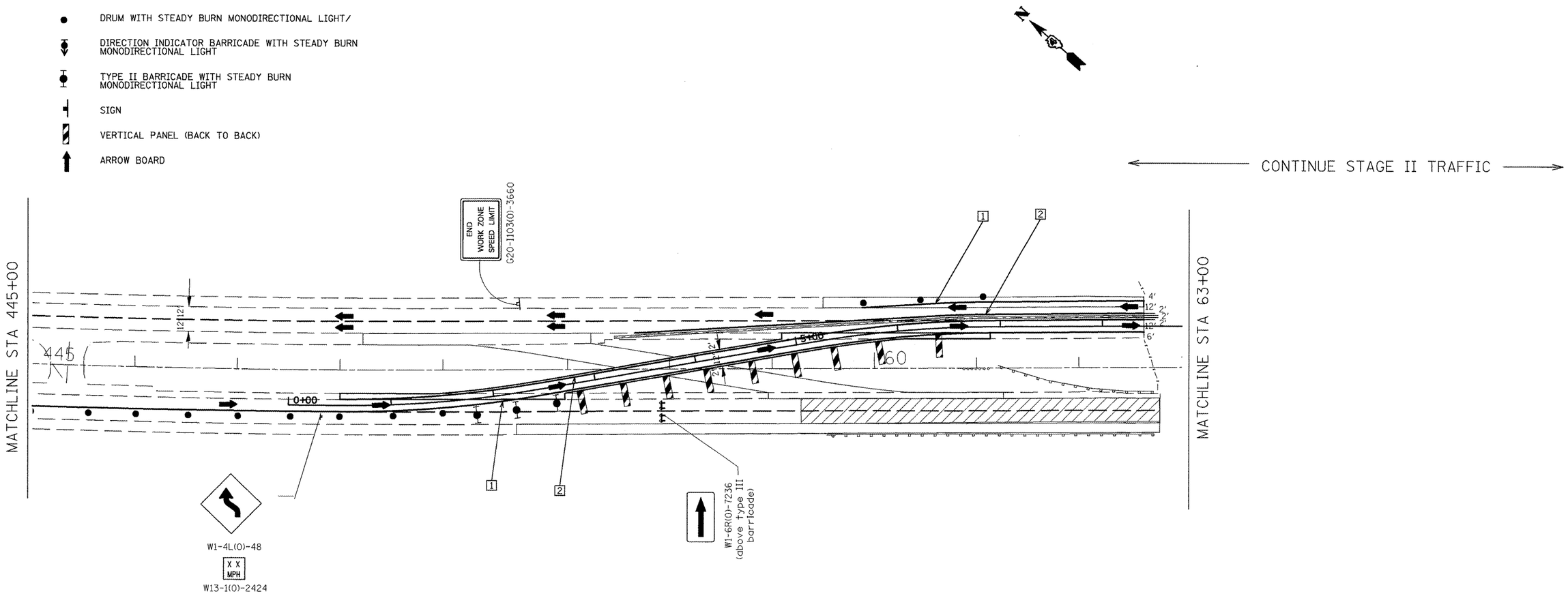

TEMPORARY PAVEMENT MARKING LEGEND

1 PAVEMENT MARKING TAPE, TYPE III - LINE 4" (SOLID WHITE)

2 PAVEMENT MARKING TAPE, TYPE III - LINE 4" (SOLID YELLOW)

FILE NAME = Stage II sheets East & West.dgn	USER NAME = labsbidism	DESIGNED -	REVISED -	STATE OF ILLINOIS DEPARTMENT OF TRANSPORTATION	MAINTENANCE OF TRAFFIC PLAN STAGE II	F.A.I. RTE.	SECTION	COUNTY	TOTAL SHEETS	SHEET NO.
		DRAWN -	REVISED -			474	(72, 90)5B)I-2	PEORIA	129	32
	PLOT SCALE = 100.0000 ' / IN.	CHECKED -	REVISED -					CONTRACT NO. 68069		
	PLOT DATE = 2/9/2011	DATE -	REVISED -		SCALE: SHEET NO. OF SHEETS STA. TO STA.			ILLINOIS FED. AID PROJECT		

LEGEND

- WORK AREA
- TYPE III BARRICADE WITH FLASHING LIGHTS
- TEMPORARY CONCRETE BARRIER
- DRUM WITH STEADY BURN MONODIRECTIONAL LIGHT/
- DIRECTION INDICATOR BARRICADE WITH STEADY BURN MONODIRECTIONAL LIGHT
- TYPE II BARRICADE WITH STEADY BURN MONODIRECTIONAL LIGHT
- SIGN
- VERTICAL PANEL (BACK TO BACK)
- ARROW BOARD

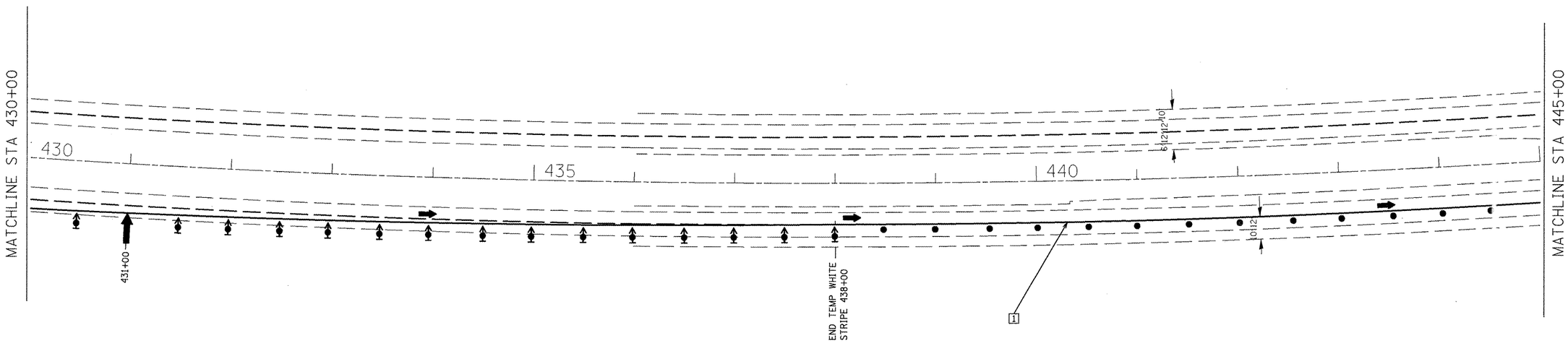

TEMPORARY PAVEMENT MARKING LEGEND

1 PAVEMENT MARKING TAPE, TYPE III - LINE 4" (SOLID WHITE)

2 PAVEMENT MARKING TAPE, TYPE III - LINE 4" (SOLID YELLOW)

FILE NAME = Stage II sheets East & West.dgn	USER NAME = lababidsn	DESIGNED -	REVISED -	STATE OF ILLINOIS DEPARTMENT OF TRANSPORTATION	MAINTENANCE OF TRAFFIC PLAN STAGE II	F.A.I. RTE.	SECTION	COUNTY	TOTAL SHEETS	SHEET NO.
		DRAWN -	REVISED -			474	((72, 90)5B)I-2	PEORIA	129	33
	PLOT SCALE = 100.0000 ' / IN.	CHECKED -	REVISED -					CONTRACT NO. 68069		
	PLOT DATE = 2/9/2011	DATE -	REVISED -		SCALE: SHEET NO. OF SHEETS STA. TO STA.			ILLINOIS FED. AID PROJECT		

LEGEND

- WORK AREA
- TYPE III BARRICADE WITH FLASHING LIGHTS
- TEMPORARY CONCRETE BARRIER
- DRUM WITH STEADY BURN MONODIRECTIONAL LIGHT/
- DIRECTION INDICATOR BARRICADE WITH STEADY BURN MONODIRECTIONAL LIGHT
- TYPE II BARRICADE WITH STEADY BURN MONODIRECTIONAL LIGHT
- SIGN
- VERTICAL PANEL (BACK TO BACK)
- ARROW BOARD

PRESTAGE IICONSTRUCTION:

1- RELOCATE TEMPORARY BARRIER WALL

1- REMOVE CONFLICTING EXISTING PAVEMENT MARKING LINES, REFLECTORS AND SIGNS UNDER HIGHWAY STANDARD 701426.

STAGE II CONSTRUCTION:

1- PERFORM THE CROSSOVER I-474 EASTBOUD TO I-474 WESTBOUND IN ACCORDANCE WITH HIGHWAY STANDARDS 701400, 701416 AND AS SHOWN IN THE PLANS.
2- PERFORM STRUCTURAL REHABILITATION ON THE I-474 EASTBOUND.

NOTES:
ALL SIGNS SHALL BE MOUNTED WITH STEADY BURN LIGHTS AT ALL TIMES THROUGHOUT THE DURATION OF CONSTRUCTION. THE COST OF THIS WORK AND ALL SIGNS SHALL BE CONSIDERED AS INCLUDED IN THE CONTRACT COST FOR TRAFFIC CONTROL AND PROTECTION.

STAGE II CROSSOVER ALIGNMENT TIE POINTS

STA.	447+50.15	OFFSET:	34.40	RT.	=	POT	STA.	0+00.00
STA.	448+00.60	OFFSET:	34.45	RT.	=	PC	STA.	0+50.61
STA.	56+71.46	OFFSET:	19.20	RT.	=	PT	STA.	2+44.03
STA.	59+38.75	OFFSET:	-25.27	LT.	=	PC	STA.	5+14.99
STA.	61+12.74	OFFSET:	-39.91	LT.	=	PT	STA.	6+89.79
STA.	92+44.53	OFFSET:	-40.37	LT.	=	PC.	STA.	38+21.58
STA.	98+04.76	OFFSET:	-40.37	LT.	=	PRC.	STA.	43+75.63
STA.	99+83.74	OFFSET:	-21.27	LT.	=	PT	STA.	45+54.32
STA.	101+55.27	OFFSET:	-5.03	LT.	=	PC	STA.	46+27.42
STA.	104+05.68	OFFSET:	36.35	RT.	=	PCC	STA.	49+83.22
STA.	105+00.00	OFFSET:	36.41	RT.	=	PT	STA.	50+78.48

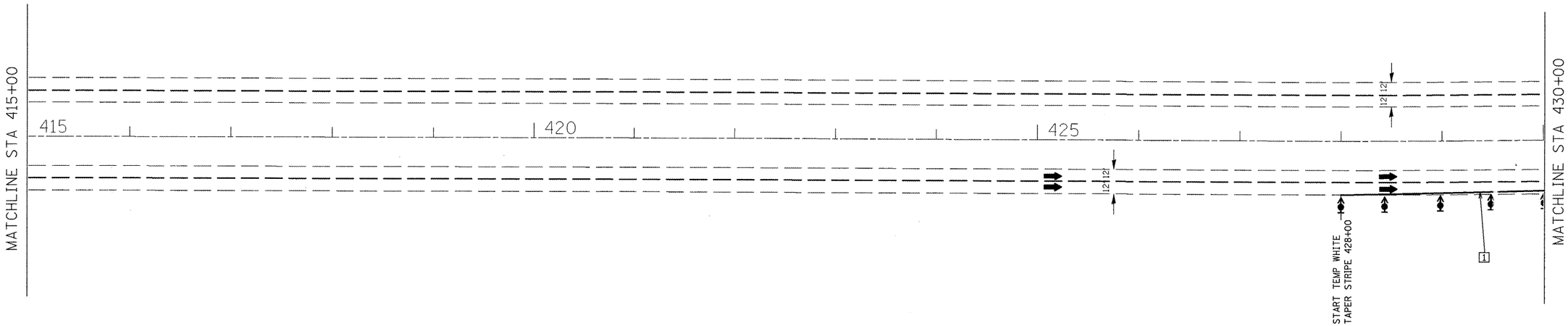

TEMPORARY PAVEMENT MARKING LEGEND

1 PAVEMENT MARKING TAPE, TYPE III - LINE 4" (SOLID WHITE)

2 PAVEMENT MARKING TAPE, TYPE III - LINE 4" (SOLID YELLOW)

FILE NAME = Stage II sheets East & West.dgn	USER NAME = lababidism	DESIGNED -	REVISED -	STATE OF ILLINOIS DEPARTMENT OF TRANSPORTATION	MAINTENANCE OF TRAFFIC PLAN STAGE II	F.A.I. RTE. 474	SECTION ((72, 90)5B)I-2	COUNTY PEO-AZ	TOTAL SHEETS 129 / SHEET NO. 34
		DRAWN -	REVISED -					CONTRACT NO. 68069	
	PLOT SCALE = 100.0000 ' / IN.	CHECKED -	REVISED -						
	PLOT DATE = 2/9/2011	DATE -	REVISED -		SCALE: SHEET NO. OF SHEETS STA. TO STA.			ILLINOIS FED. AID PROJECT	

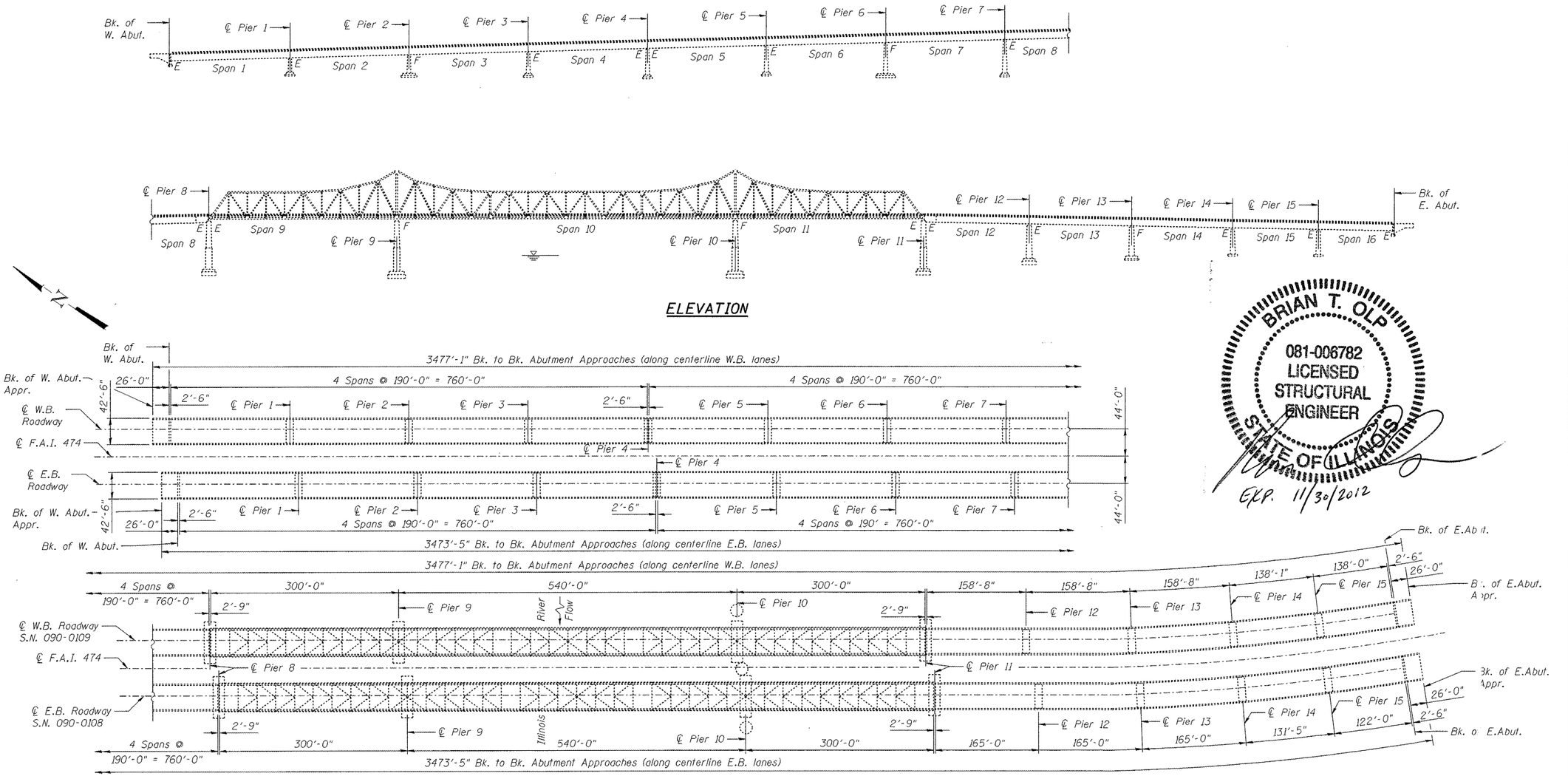

BRIAN T. OLP
081-006782
LICENSED
STRUCTURAL
ENGINEER
STATE OF ILLINOIS
EXP. 11/30/2012

DESIGN SPECIFICATIONS

2002 AASHTO Standard Specifications for Highway Bridges, 17th Edition

LOADING HS20 & ALT.

(Original Construction)

DESIGN STRESSES

NEW CONSTRUCTION

f'c = 3,500 psi (Cast in Place Concrete)
fy = 60,000 psi (Reinforcing Steel)
Fy = 36,000 psi unless otherwise noted (Structural Steel) (M270, Gr. 36)

FILE NAME =	USER NAME =	DESIGNED - BTO	REVISED -	STATE OF ILLINOIS DEPARTMENT OF TRANSPORTATION	GENERAL PLAN & ELEVATION STRUCTURE NO. 090-0108 & 090-0109	F.A.I. RTE. 474	SECTION	COUNTY PEORIA & TAZEWELL	TOTAL SHEETS 129 / SHEET NO. 35
		CHECKED - JAN	REVISED -						
	PLOT SCALE =	DRAWN - BTO	REVISED -						
	PLOT DATE =	CHECKED - JAN	REVISED -		SHEET NO. 1 OF 65 SHEETS			ILLINOIS FED. AID PROJECT	CONTRACT NO. 68069

GENERAL NOTES

Fasteners shall be High Strength bolts $\frac{7}{8}$"ϕ. open holes $\frac{15}{16}$"ϕ. unless otherwise noted.

Reinforcement bars shall conform to the requirements of ASTM A 706 Gr 60. See Special Provisions.

Reinforcement bars designated (E) shall be epoxy coated.

Prior to pouring the new concrete deck. all heavy or loose rust. loose mill scale. and other loose or potentially detrimental foreign material shall be removed from the surfaces in contact with concrete. Tightly adhered paint may remain unless otherwise noted. Removal shall be accomplished by methods that will not damage the steel and the cost will be included in the pay item covering removal of the existing concrete.

As directed by the Engineer. existing construction accessories welded to the top flange of beams and girders shall be removed. The weld areas shall be ground flush and inspected for cracks using magnetic particle testing (MT) or dye penetrant testing (PT) by qualified personnel approved by the Engineer.

Any cracks that cannot be removed by grinding $\frac{1}{4}$ inch deep shall be identified and reported to the Bureau of Bridges and Structures for further disposition. The cost of removing welded accessories. grinding and inspecting weld areas and grinding cracks will be paid for according to Article 109.04 of the Standard Specifications.

Plan dimensions and details relative to existing plans are subject to nominal construction variations. The Contractor shall field verify existing dimensions and details affecting new construction and make necessary approved adjustments prior to construction or ordering of materials. Such variations shall not be cause for additional compensation for a change in scope of the work. however. the Contractor will be paid for the quantity actually furnished at the unit price bid for the work.

The Inorganic Zinc Rich Primer / Acrylic / Acrylic Paint System shall be used for shop and field painting of new structural steel except where otherwise noted. The color of the final finish coat for all interior and exterior steel surfaces shall be blue. Munsell No. 10B 3/6. See Special Provision for "Cleaning and Painting New Metal Structures".

Concrete Sealer shall be applied to the top of East and West Abutment bearing seats and the top of Pier cap tie beams and Pedestals at Piers 4. 8. and 11.

The existing structural steel coating contains lead. The Contractor shall take appropriate precautions to deal with the presence of lead on this project.

Joint openings shall be adjusted according to Article 520.04 of the Standard Specifications when the ambient temperature varies from 50°F.

If the analysis submitted to the Contractor for the jacking/temporary support system to be used shows temporary stiffeners are required to prevent web crippling or buckling. the stiffeners shall be steel and bolted to the web. If stiffeners are not required. hardwood timbers shall be installed tightly between the top and bottom flange to prevent flange rotation.

Existing structural steel in contact with new structural steel shall only be cleaned and painted as required by the Special Provision "Cleaning and Painting Contact Surface Areas of Existing Steel Structures".

The Contractor shall remove and replace existing bolts and nuts in the truss satisfying the requirements for corroded bolts and nuts as stated in the special provision BOLT REPLACEMENT. Contractor shall allow for 250 bolt replacements over and above those shown in the plans. the location of which shall be determined by the Contractor to conform with the special provision and/or as determined by the Engineer.

The areas to be Metallized per "Field Thermal Spraying (Metallizing) Structural Steel No. 1 & No. 2" shall be 10' either side of expansion joints at Piers 4. 8 & 11. at FB 15 & 15' on the truss. and 10' into the approach span at the east and west abutments.

Work shown in these plans shall be accomplished using structure crossovers. See Traffic Control Staging Sections for staging layout.

TOTAL BILL OF MATERIAL

ITEM	UNIT	SUPER	SUB	TOTAL
Hot-Mix Asphalt Wearing Surface Removal. Deck	Sq. Yd.	29.961		29.961
Concrete Removal	Cu. Yd.	187.0		187.0
Floor Drains	Each	380		380
Concrete Superstructure	Cu. Yd.	219.5		219.5
Bridge Deck Grooving	Sq. Yd.	28.509		28.509
Protective Coat****	Sq. Yd.	5.698		5.698
Furnishing and Erecting Structural Steel	Pound	9.590		9.590
Floor Drain Extension	Each	389		389
Jack and Remove Existing Bearings	Each	24		24
Structural Steel Repair	Pound	20.500		20.500
Containment and Disposal of Lead Paint Cleaning Residues No.1	L. Sum	1		1
Containment and Disposal of Lead Paint Cleaning Residues No.2	L. Sum	1		1
Reinforcement Bars. Epoxy Coated	Pound	45.300		45.300
Finger Plate Expansion Joint. 3"	Foot	78.0		78.0
Fabric Reinforced Elastomeric Trough	Foot	395		395
Preformed Joint Strip Seal	Foot	738		738
Anchor Bolts. $1\frac{1}{2}$"	Each		96	96
Concrete Sealer	Sq. Ft.		1.719	1.719
Plug Existing Deck Drains	Each	1.331		1.331
Bridge Deck Latex Concrete Overlay. $2\frac{1}{4}$"	Sq. Yd.	29.520		29.520
Cleaning and Painting Exposed Rebar**	Sq. Ft.	82		82
Field Thermal Spraying (Metallizing) Structural Steel No.1	L. Sum	1		1
Field Thermal Spraying (Metallizing) Structural Steel No.2	L. Sum	1		1
Bolt Replacement	Each	340		340
Structural Repair of Concrete (Depth Equal To or Less Than 5 in.)	Sq. Ft.	73***	2.798	2.871
Remove and Reinstall Finger Plate Joint	Each	8		8
High Load Multi-Rotation Bearings. Guided Expansion. 450K	Each	4		4
High Load Multi-Rotation Bearings. Guided Expansion. 550K	Each	20		20
Mechanical Splicers	Each	2.000		2.000
Deck Slab Repair (Partial)*	Sq. Yd.	55.3		55.3
Deck Slab Repair (Full Depth. Type I)	Sq. Yd.	102.0		102.0
Deck Slab Repair (Full Depth. Type II)	Sq. Yd.	27.7		27.7
Bridge Deck Scarification. $\frac{3}{4}$"	Sq. Yd.	29.961		29.961

* For information only. Cost of this work is included with Bridge Deck Scarification. $\frac{3}{4}$" and Bridge Deck Latex Concrete Overlay. $2\frac{1}{4}$".

Deck Slab Repair Quantities (Non-Deck Drain repairs) are shown for Eastbound Structure. A similar quantity is assumed for the Westbound Structure which shall be verified by the Contractor. Repair areas shown are assumed to be approximately 75% DECK SLAB REPAIR (PARTIAL) & 25% DECK SLAB REPAIR (FULL DEPTH. TYPE II).

**Locations at underside of Deck overhangs (soffit) on approach spans. Quantities are approximate and Contractor shall verify in field.

***Locations at Parapets. Quantities are approximate and Contractor shall verify in field.

****Protective Coat to be applied to the face and top of concrete parapets (existing and new concrete) and shall not be applied to new Concrete Overlay.

All new structural steel shall conform to AASHTO Classification M-270 GR. 36 unless otherwise noted.

The Contractor shall submit Structural Assessment Report(s) as required for the Contractor's means and methods of construction. See Special Provisions.

The Contractor shall retain the services of an engineering firm. prequalified in the IDOT consultant selection category of Highway Bridges (Complex). for preparation of the Structural Assessment Report. Contractor's pre-approval shall not be applicable for this project. See Special Provision.

Inventory and Operating Ratings and Live Load Restrictions are provided for information only. Inventory and Operating Ratings are based on HS loading and configuration. Live Load Restrictions are based on Illinois legal loads and configurations. The Ratings and Live Load Restrictions are not necessarily representative of capacities to support the Contractor's equipment.

CURRENT RATINGS ON FILE FOR EXISTING STRUCTURES

Inventory: HS 22.2
Operating: HS 33.9
Live Load Restrictions: No

INDEX OF SHEETS

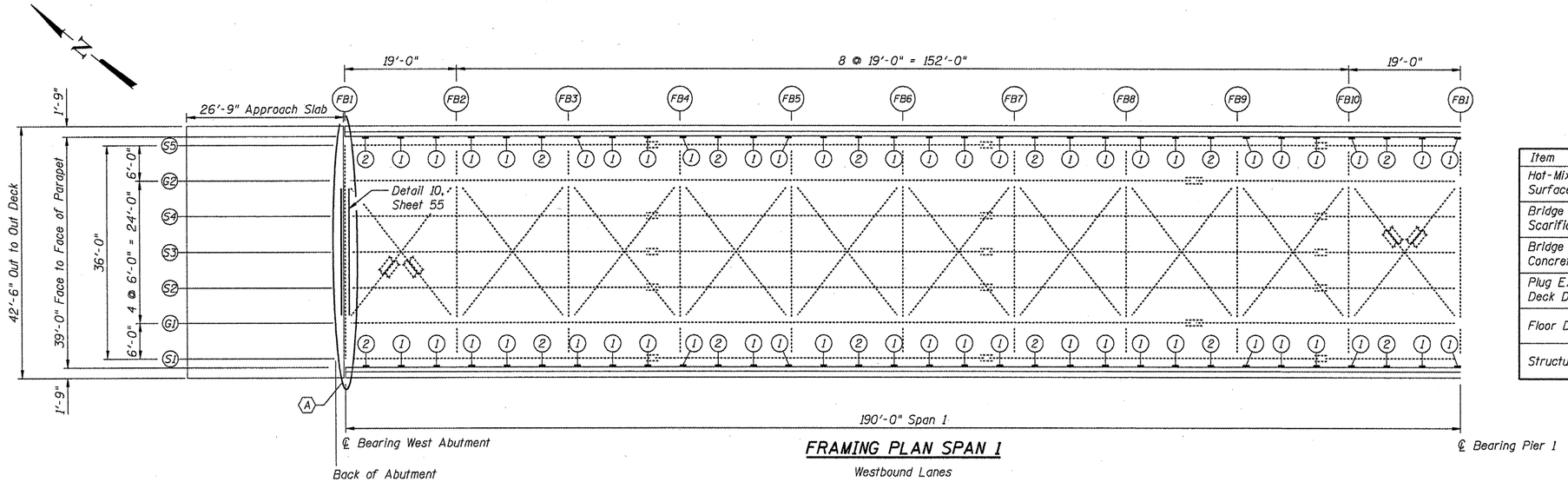

FRAMING PLAN SPAN 1

Westbound Lanes

BILL OF MATERIAL

Item	Unit	Quantity
Hot-Mix Asphalt Wearing Surface Removal, Deck	Sq. Yd.	1,759
Bridge Deck Scarification, $\frac{3}{4}$"	Sq. Yd.	1,759
Bridge Deck Latex Concrete Overlay, $2\frac{1}{4}$"	Sq. Yd.	1,737
Plug Existing Deck Drains	Each	98
Floor Drain Extension	Each	28
Structural Steel Repair	Pound	600

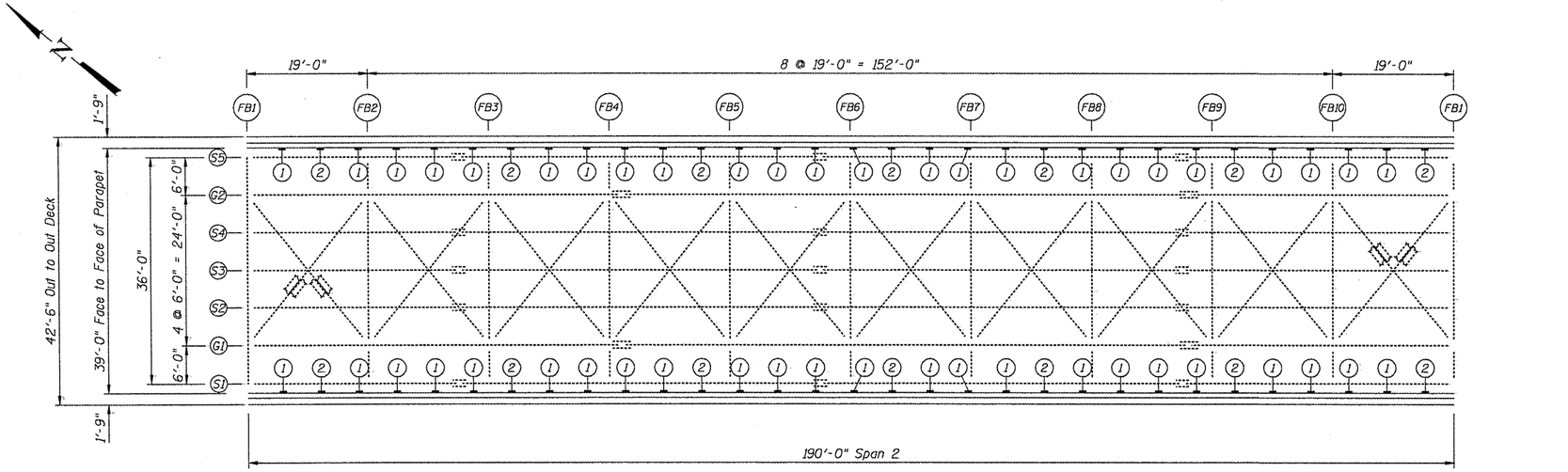

FRAMING PLAN SPAN 2

Westbound Lanes

LEGEND

(1) Plug Existing Floor Drains

(2) Extend Existing Drain

⟨A⟩ Finger Plate Expansion Joint Replacement

FILE NAME = $FILEL$	USER NAME = $USER$	DESIGNED - JAN	REVISED -	STATE OF ILLINOIS DEPARTMENT OF TRANSPORTATION	GENERAL PLAN & REPAIR LOCATION WESTBOUND SPANS 1 & 2 S.N. 090-0109	F.A.I. RTE. 474	SECTION	COUNTY PEORIA & TAZEWELL	TOTAL SHEETS 129 / SHEET NO. 37
		CHECKED - BTO	REVISED -						
	PLOT SCALE = $SCALE$	DRAWN - NJK	REVISED -					CONTRACT NO. 68069	
	PLOT DATE = $DATE$	CHECKED - JAN	REVISED -		SHEET NO. 3 OF 65 SHEETS			ILLINOIS FED. AID PROJECT	

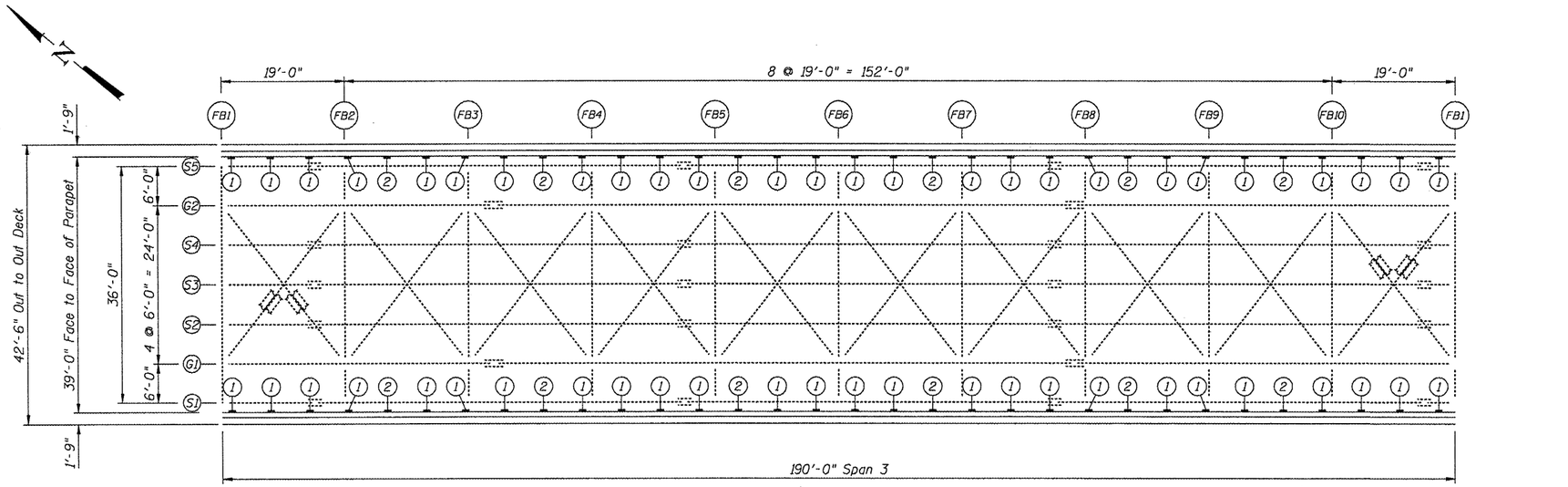

FRAMING PLAN SPAN 3

Westbound Lanes

BILL OF MATERIAL

Item	Unit	Quantity
Hot-Mix Asphalt Wearing Surface Removal, Deck	Sq. Yd	1,646
Bridge Deck Scarification, 3/4"	Sq. Yd	1,646
Bridge Deck Latex Concrete Overlay, 2 1/4"	Sq. Yd	1,627
Plug Existing Deck Drains	Each	100
Floor Drain Extension	Each	26
Bolt Replacement	Each	1

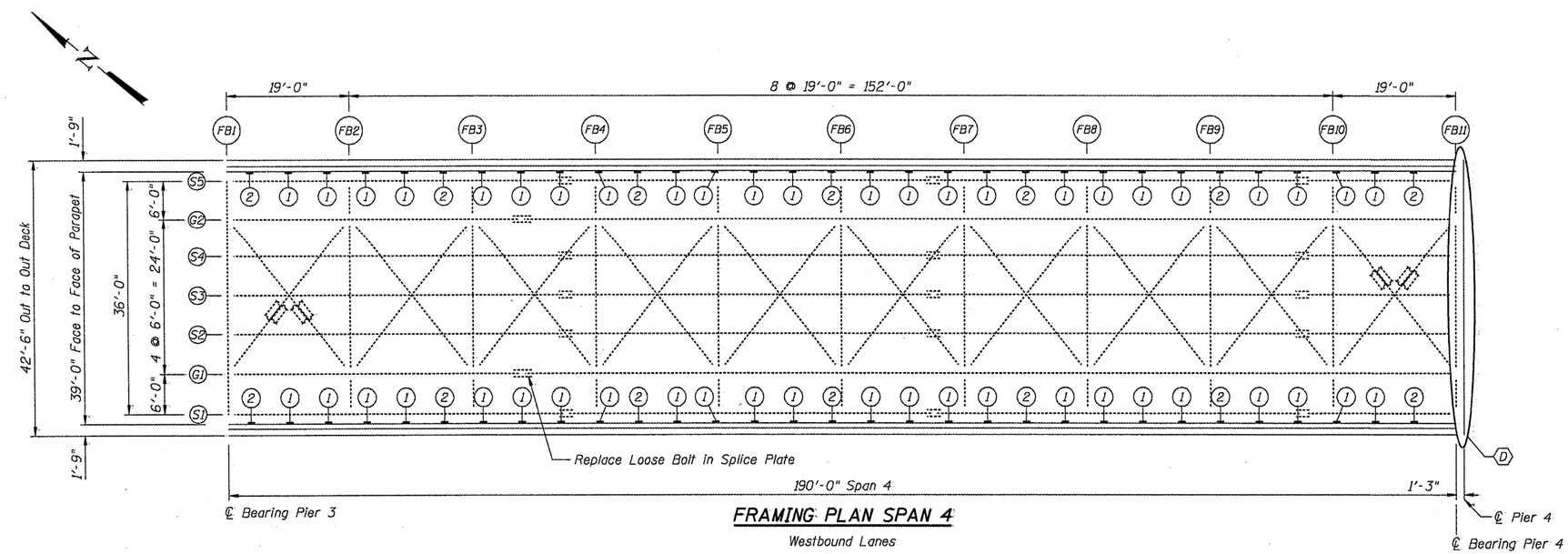

FRAMING PLAN SPAN 4

Westbound Lanes

LEGEND

(1) Plug Existing Floor Drains

(2) Extend Existing Drain

(D) Expansion Joint Trough Installation

FILE NAME = $FILE1$	USER NAME = $USER$	DESIGNED - JAN	REVISED -	STATE OF ILLINOIS DEPARTMENT OF TRANSPORTATION	GENERAL PLAN & REPAIR LOCATION WESTBOUND SPANS 3 & 4 S.N. 090-0109	F.A.I. RTE.	SECTION	COUNTY	TOTAL SHEETS / SHEET NO.
		CHECKED - BTO	REVISED -			474		PEORIA & TAZEWELL	129 / 38
	PLOT SCALE = $SCALE$	DRAWN - NJK	REVISED -					CONTRACT NO. 68069	
	PLOT DATE = $DATE$	CHECKED - JAN	REVISED -		SHEET NO. 4 OF 65 SHEETS			ILLINOIS FED. AID PROJECT	

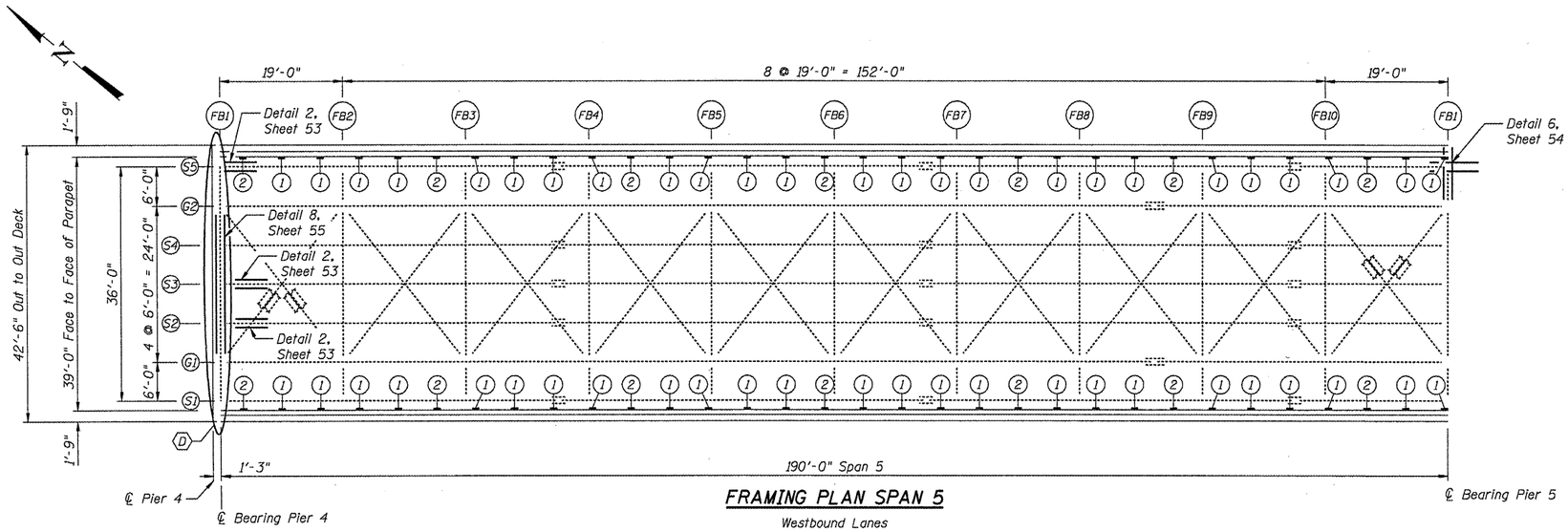

FRAMING PLAN SPAN 5

Westbound Lanes

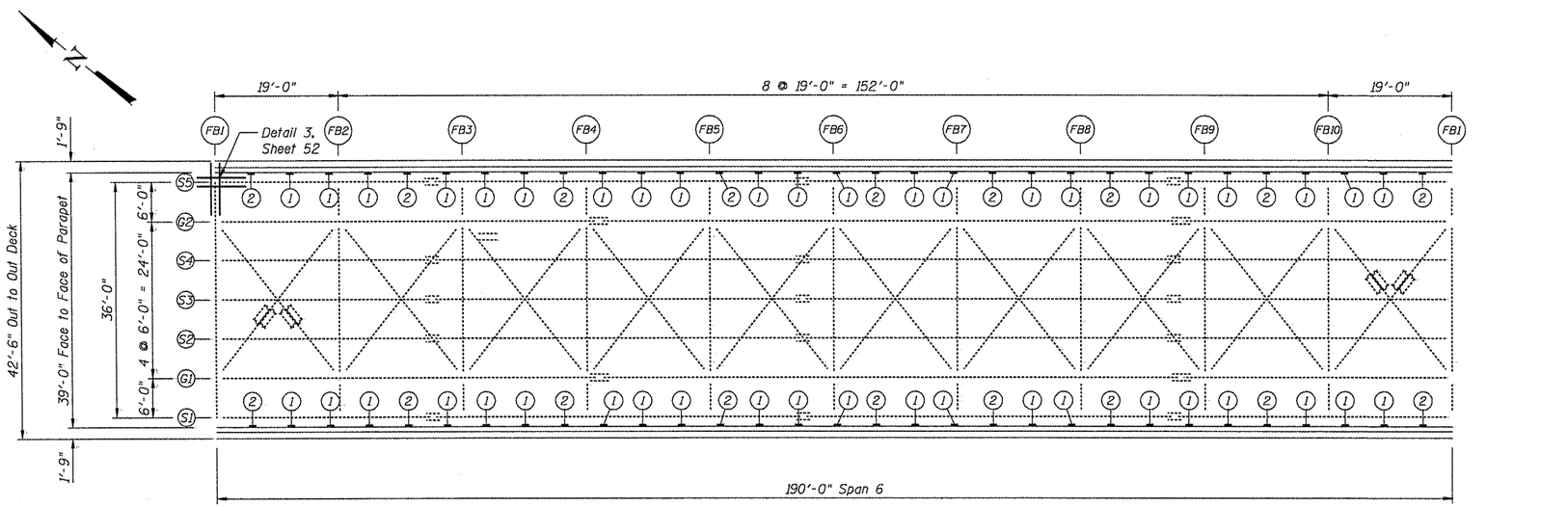

FRAMING PLAN SPAN 6

Westbound Lanes

BILL OF MATERIAL

Item	Unit	Quantity
Hot-Mix Asphalt Wearing Surface Removal, Deck	Sq. Yd	1,646
Bridge Deck Scarification, $\frac{3}{4}$"	Sq. Yd	1,646
Bridge Deck Latex Concrete Overlay, $2\frac{1}{4}$"	Sq. Yd	1,636
Plug Existing Deck Drains	Each	94
Floor Drain Extension	Each	32
Structural Steel Repair	Pound	2,070

LEGEND

(1) Plug Existing Floor Drains

(2) Extend Existing Drain

(D) Expansion Joint Trough Installation

FILE NAME = $FILEL$	USER NAME = $USER$	DESIGNED - JAN	REVISED -
		CHECKED - BTO	REVISED -
	PLOT SCALE = $SCALE$	DRAWN - MJK	REVISED -
	PLOT DATE = $DATE$	CHECKED - JAN	REVISED -

STATE OF ILLINOIS
DEPARTMENT OF TRANSPORTATION

GENERAL PLAN & REPAIR LOCATION
WESTBOUND SPANS 5 & 6 S.N. 090-0109

SHEET NO. 5 OF 65 SHEETS

F.A.I. RTE.	SECTION	COUNTY	TOTAL SHEETS	SHEET NO.
474		PEORIA & TAZEWELL	129	39
		CONTRACT NO. 68069		
		ILLINOIS FED. AID PROJECT		

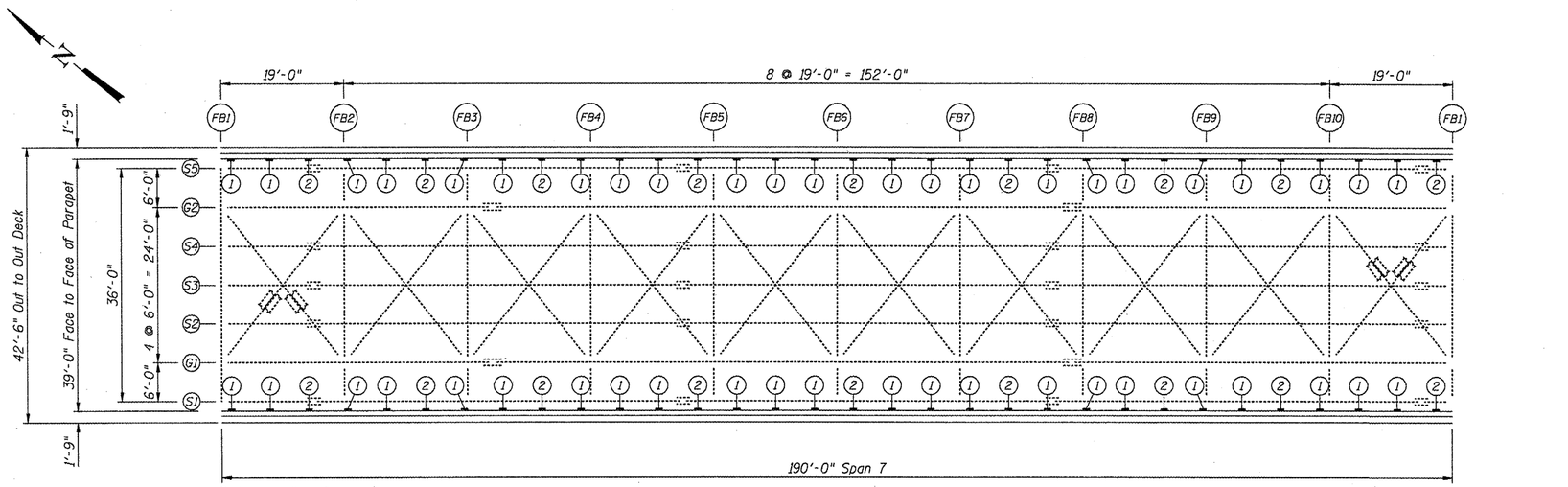

FRAMING PLAN SPAN 7

Westbound Lanes

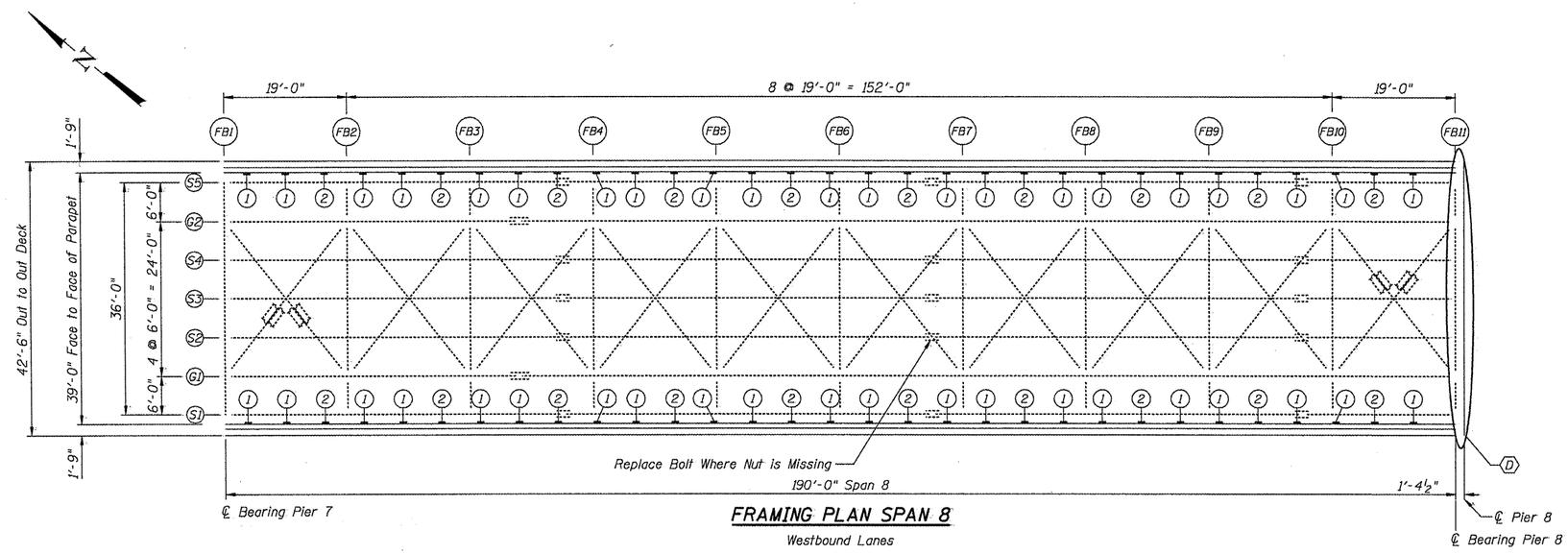

FRAMING PLAN SPAN 8

Westbound Lanes

BILL OF MATERIAL

Item	Unit	Quantity
Hot-Mix Asphalt Wearing Surface Removal, Deck	Sq. Yd	1,644
Bridge Deck Scarification, ¾"	Sq. Yd	1,644
Bridge Deck Latex Concrete Overlay, 2¼"	Sq. Yd	1,638
Plug Existing Deck Drains	Each	88
Floor Drain Extension	Each	38
Bolt Replacement	Each	1

LEGEND

(1) Plug Existing Floor Drains

(2) Extend Existing Drain

(D) Expansion Joint Trough Installation

FILE NAME = $FILEL$	USER NAME = $USER$	DESIGNED - JAN	REVISED -	STATE OF ILLINOIS DEPARTMENT OF TRANSPORTATION	GENERAL PLAN & REPAIR LOCATION WESTBOUND SPANS 7 & 8 S.N. 090-0109	F.A.I. RTE. 474	SECTION	COUNTY PEORIA & TAZEWELL	TOTAL SHEETS 129 / SHEET NO. 40
		CHECKED - BTO	REVISED -					CONTRACT NO. 68069	
	PLOT SCALE = $SCALE$	DRAWN - MJK	REVISED -						
	PLOT DATE = $DATE$	CHECKED - JAN	REVISED -		SHEET NO. 6 OF 65 SHEETS			ILLINOIS FED. AID PROJECT	

BILL OF MATERIAL

Item	Unit	Quantity
Hot-Mix Asphalt Wearing Surface Removal, Deck	Sq. Yd.	1,044
Bridge Deck Scarification, $\frac{3}{4}$"	Sq. Yd.	1,044
Bridge Deck Latex Concrete Overlay, $2\frac{1}{4}$"	Sq. Yd.	1,011
Plug Existing Deck Drains	Each	40
Floor Drains	Each	40
Structural Steel Repair	Pound	700
*Deck Slab Repair (Full Depth Type I)	Sq. Yd.	10.7

* At Floor Drain Replacement Locations

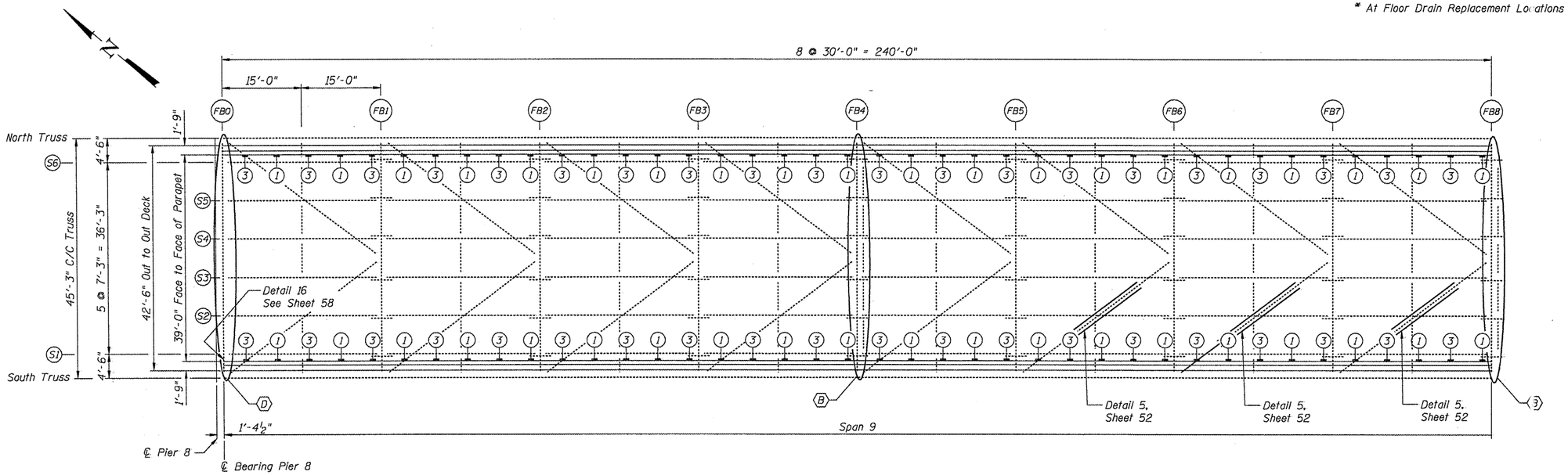

PARTIAL FRAMING PLAN SPAN 9

Westbound Lanes

LEGEND

(1) Plug Existing Floor Drains

(3) Remove Existing Floor Drain and Install new 6"ϕ Drain

(B) Replace Existing Relief Joints with Preformed Joint Strip Seal.

(D) Expansion Joint Trough Installation

FILE NAME = $FILEL$	USER NAME = $USER$	DESIGNED - JAN	REVISED -	STATE OF ILLINOIS DEPARTMENT OF TRANSPORTATION	GENERAL PLAN & REPAIR LOCATION WESTBOUND SPAN 9 FB0 TO FB8 S.N. 090-0109	F.A.I. RTE. 474	SECTION	COUNTY PEORIA & TAZEWELL	TOTAL SHEETS 129 / SHEET NO. 41
		CHECKED - BTQ	REVISED -						
	PLOT SCALE = $SCALE$	DRAWN - NJK	REVISED -					CONTRACT NO. 68069	
	PLOT DATE = $DATE$	CHECKED - JAN	REVISED -		SHEET NO. 7 OF 65 SHEETS			ILLINOIS FED. AID PROJECT	

BILL OF MATERIAL

Item	Unit	Quantity
Hot-Mix Asphalt Wearing Surface Removal, Deck	Sq. Yd.	894
Bridge Deck Scarification, $\frac{3}{4}$"	Sq. Yd.	894
Bridge Deck Latex Concrete Overlay, $2\frac{1}{4}$"	Sq. Yd.	867
Plug Existing Deck Drains	Each	34
Floor Drains	Each	36
Bolt Replacement	Each	21
*Deck Slab Repair (Full Depth Type I)	Sq. Yd.	9.7

* At Floor Drain Replacement Locations

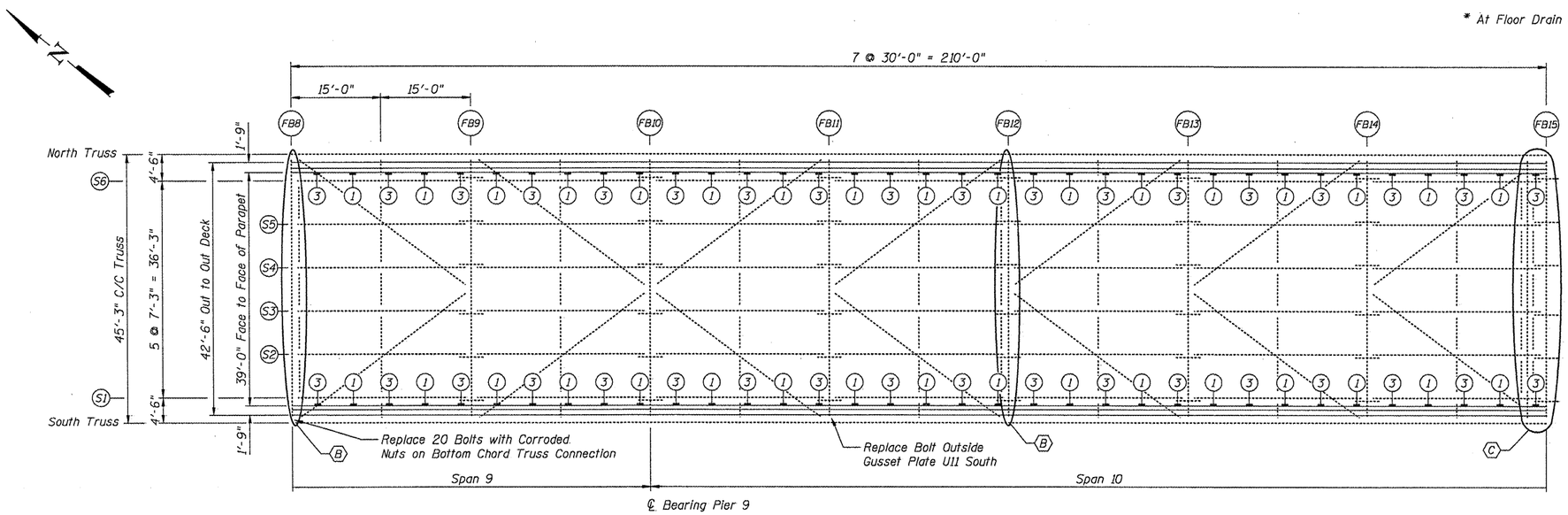

PARTIAL FRAMING PLAN SPANS 9 & 10

Westbound Lanes

LEGEND

(1) Plug Existing Floor Drains

(3) Remove Existing Floor Drain and Install new 6"ϕ Drain

⟨B⟩ Replace Existing Relief Joints with Preformed Joint Strip Seal.

⟨C⟩ Replace Existing Finger Joints with Preformed Joint Strip Seal.

FILE NAME = $FILEL$	USER NAME = $USER$	DESIGNED - JAN	REVISED -	STATE OF ILLINOIS DEPARTMENT OF TRANSPORTATION	GENERAL PLAN & REPAIR LOCATION WESTBOUND SPANS 9 & 10 FB8 TO FB15 S.N. 090-0109	F.A.I. RTE. 474	SECTION	COUNTY PEORIA & TAZEWELL	TOTAL SHEETS 129 / SHEET NO. 42
		CHECKED - BTO	REVISED -					CONTRACT NO. 68069	
	PLOT SCALE = $SCALE$	DRAWN - MJK	REVISED -						
	PLOT DATE = $DATE$	CHECKED - JAN	REVISED -		SHEET NO. 8 OF 65 SHEETS			ILLINOIS FED. AID PROJECT	

BILL OF MATERIAL

Item	Unit	Quantity
Hot-Mix Asphalt Wearing Surface Removal, Deck	Sq. Yd.	1,044
Bridge Deck Scarification, $\frac{3}{4}$"	Sq. Yd.	1,044
Bridge Deck Latex Concrete Overlay, $2\frac{1}{4}$"	Sq. Yd.	1,013
Plug Existing Deck Drains	Each	40
Floor Drains	Each	40
Bolt Replacement	Each	21
Structural Steel Repair	Pound	270
*Deck Slab Repair (Full Depth Type I)	Sq. Yd.	10.7

* At Floor Drain Replacement Locations

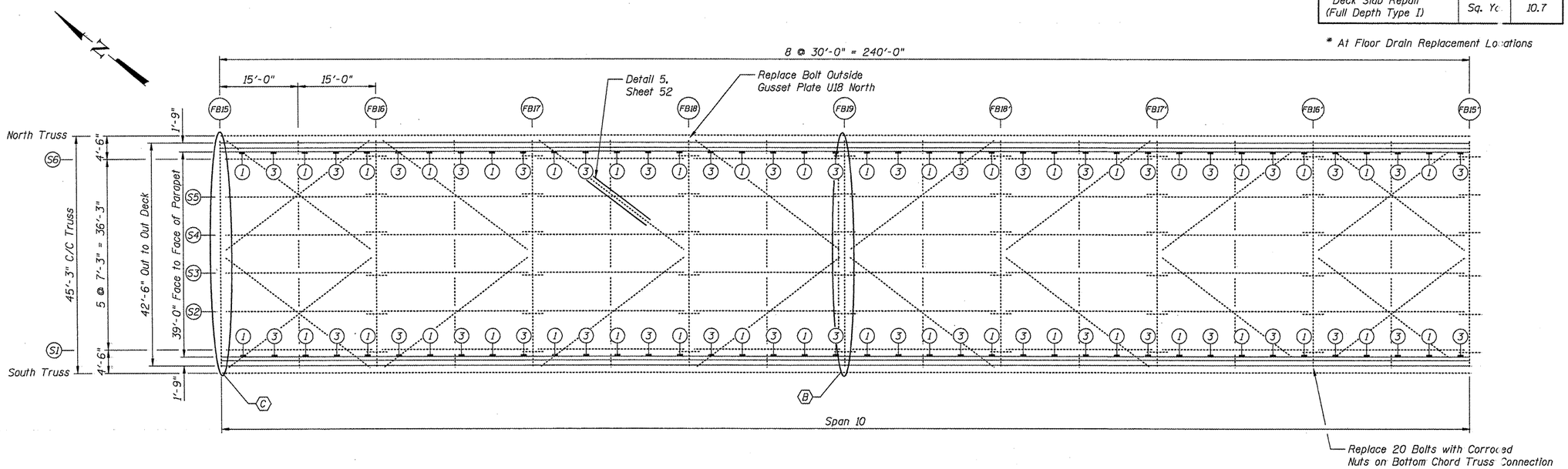

PARTIAL FRAMING PLAN SPAN 10

Westbound Lanes

LEGEND

(1) Plug Existing Floor Drains

(3) Remove Existing Floor Drain and Install new 6"ϕ Drain

⟨B⟩ Replace Existing Relief Joints with Preformed Joint Strip Seal.

⟨C⟩ Replace Existing Finger Joints with Preformed Joint Strip Seal.

FILE NAME = $FILEL$	USER NAME = $USER$	DESIGNED - JAN	REVISED -	STATE OF ILLINOIS DEPARTMENT OF TRANSPORTATION	GENERAL PLAN & REPAIR LOCATION WESTBOUND SPAN 10 FB15 TO FB15' S.N. 090-0109	F.A.I. RTE. 474	SECTION	COUNTY PEORIA & TAZEWELL	TOTAL SHEETS 129 / SHEET NO. 43
		CHECKED - BTO	REVISED -						
	PLOT SCALE = $SCALE$	DRAWN - NJK	REVISED -					CONTRACT NO. 68069	
	PLOT DATE = $DATE$	CHECKED - JAN	REVISED -		SHEET NO. 9 OF 65 SHEETS			ILLINOIS FED. AID PROJECT	

BILL OF MATERIAL

Item	Unit	Quantity
Hot-Mix Asphalt Wearing Surface Removal, Deck	Sq. Yd	894
Bridge Deck Scarification, $\frac{3}{4}$"	Sq. Yd	894
Bridge Deck Latex Concrete Overlay, $2\frac{1}{4}$"	Sq. Yd	874
Plug Existing Deck Drains	Each	36
Floor Drains	Each	34
*Deck Slab Repair (Full Depth Type I)	Sq. Yd	9.1

* At Floor Drain Replacement Locations

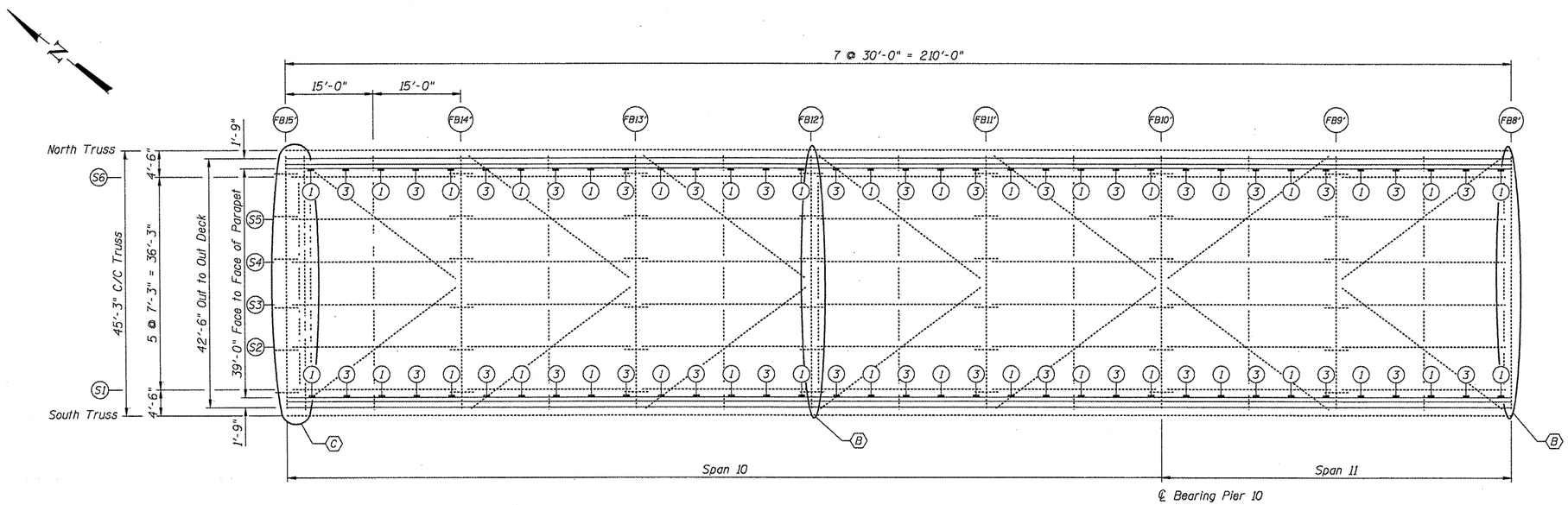

PARTIAL FRAMING PLAN SPANS 10 & 11

Westbound Lanes

LEGEND

(1) Plug Existing Floor Drains

(3) Remove Existing Floor Drain and Install new 6"ϕ Drain

⟨B⟩ Replace Existing Relief Joints with Preformed Joint Strip Seal.

⟨C⟩ Replace Existing Finger Joints with Preformed Joint Strip Seal.

FILE NAME = $FILEL$	USER NAME = $USER$	DESIGNED - JAN	REVISED -	STATE OF ILLINOIS DEPARTMENT OF TRANSPORTATION	GENERAL PLAN & REPAIR LOCATION WESTBOUND SPANS 10 & 11 FB15' TO FB8' S.N. 090-0109	F.A.I. RTE. 474	SECTION	COUNTY PEORIA & TAZEWELL	TOTAL SHEETS 129 / SHEET NO. 44
		CHECKED - BTO	REVISED -						
	PLOT SCALE = $SCALE$	DRAWN - NJK	REVISED -						
	PLOT DATE = $DATE$	CHECKED - JAN	REVISED -		SHEET NO. 10 OF 65 SHEETS			ILLINOIS FED. AID PROJECT	CONTRACT NO. 68069

BILL OF MATERIAL

Item	Unit	Quantity
Hot-Mix Asphalt Wearing Surface Removal, Deck	Sq. Yd	1,044
Bridge Deck Scarification, $\frac{3}{4}$"	Sq. Yd	1,044
Bridge Deck Latex Concrete Overlay, $2\frac{1}{4}$"	Sq. Yd	1,008
Plug Existing Deck Drains	Each	40
Floor Drains	Each	40
Bolt Replacement	Each	16
*Deck Slab Repair (Full Depth Type I)	Sq. Yd	10.7

* At Floor Drain Replacement Locations

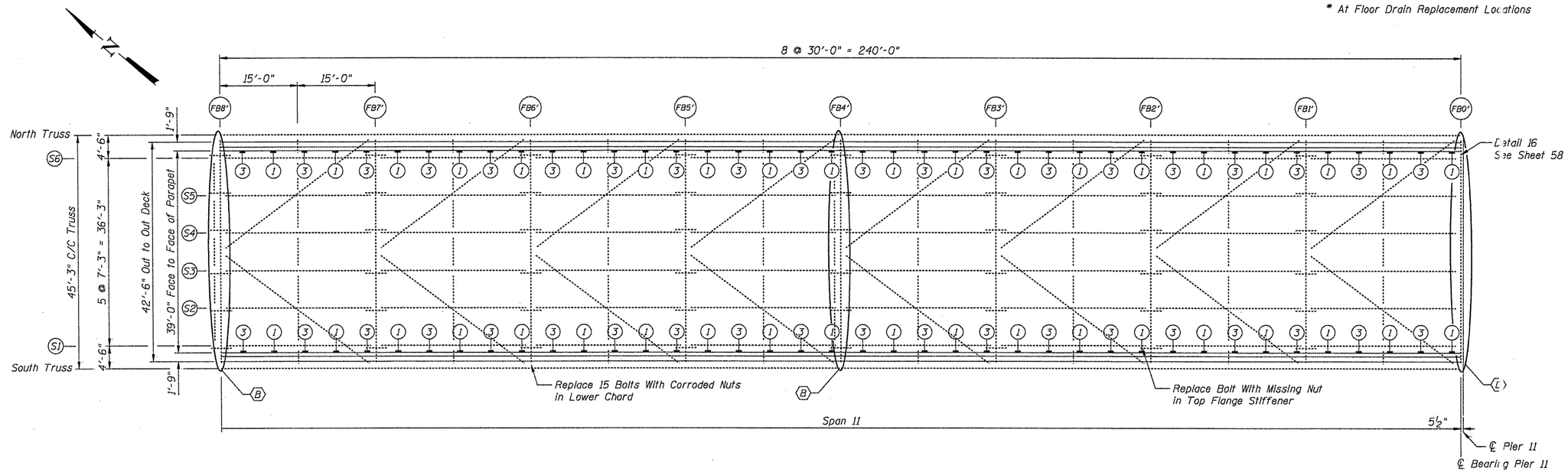

PARTIAL FRAMING PLAN SPAN 11

Westbound Lanes

LEGEND

(1) Plug Existing Floor Drains

(3) Remove Existing Floor Drain and Install new 6"ϕ Drain

⟨B⟩ Replace Existing Relief Joints with Preformed Joint Strip Seal.

⟨D⟩ Expansion Joint Trough Installation

FILE NAME = $FILEL$	USER NAME = $USER$	DESIGNED - JAN	REVISED -	STATE OF ILLINOIS DEPARTMENT OF TRANSPORTATION	GENERAL PLAN & REPAIR LOCATION WESTBOUND SPAN 11 FB8' TO FB0' S.N. 090-0109	F.A.I. RTE. 474	SECTION	COUNTY PEORIA & TAZEWELL	TOTAL SHEETS 129	SHEET NO. 45
		CHECKED - BTO	REVISED -							
	PLOT SCALE = $SCALE$	DRAWN - MJK	REVISED -					CONTRACT NO. 68069		
	PLOT DATE = $DATE$	CHECKED - JAN	REVISED -		SHEET NO. 11 OF 65 SHEETS.			ILLINOIS FED. AID PROJECT		

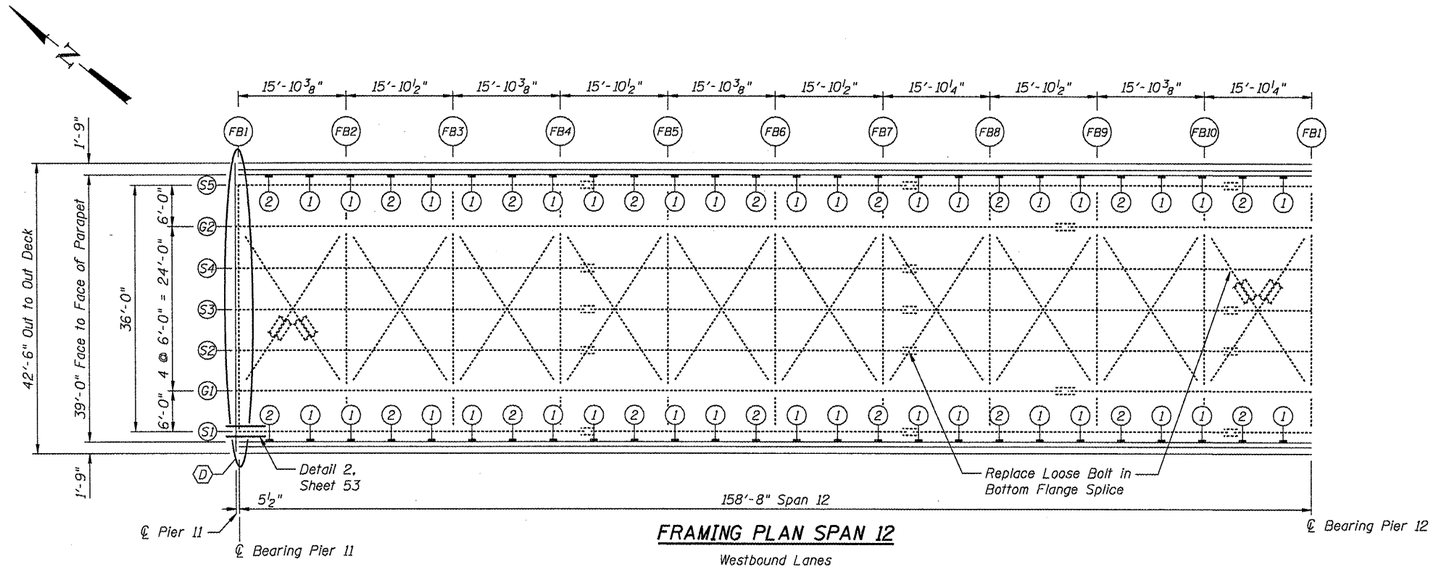

FRAMING PLAN SPAN 12

Westbound Lanes

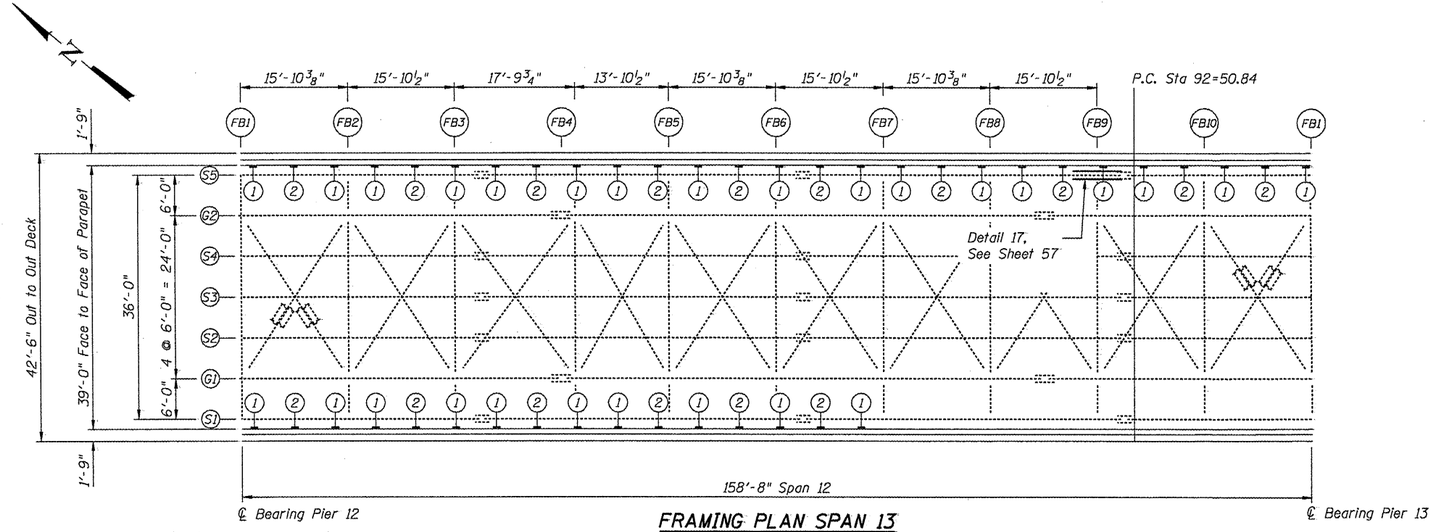

FRAMING PLAN SPAN 13

Westbound Lanes

BILL OF MATERIAL

Item	Unit	Quantity
Hot-Mix Asphalt Wearing Surface Removal, Deck	Sq. Yd.	1,375
Bridge Deck Scarification, 3/4"	Sq. Yd.	1,375
Bridge Deck Latex Concrete Overlay, 2 1/4"	Sq. Yd.	1,372
Plug Existing Deck Drains	Each	61
Floor Drain Extension	Each	34
Bolt Replacement	Each	2
Structural Steel Repair	Pound	450

LEGEND

(1) Plug Existing Floor Drains

(2) Extend Existing Drain

(D) Expansion Joint Trough Installation

FILE NAME = $FILEL$	USER NAME = $USER$	DESIGNED - JAN	REVISED -
		CHECKED - BTQ	REVISED -
	PLOT SCALE = $SCALE$	DRAWN - NJK	REVISED -
	PLOT DATE = $DATE$	CHECKED - JAN	REVISED -

STATE OF ILLINOIS
DEPARTMENT OF TRANSPORTATION

GENERAL PLAN & REPAIR LOCATION
WESTBOUND SPANS 12 & 13 S.N. 090-0109

SHEET NO. 12 OF 65 SHEETS

F.A.I. RTE.	SECTION	COUNTY	TOTAL SHEETS	SHEET NO.
474		PEORIA & TAZEWELL	129	46
		CONTRACT NO. 68069		
		ILLINOIS FED. AID PROJECT		

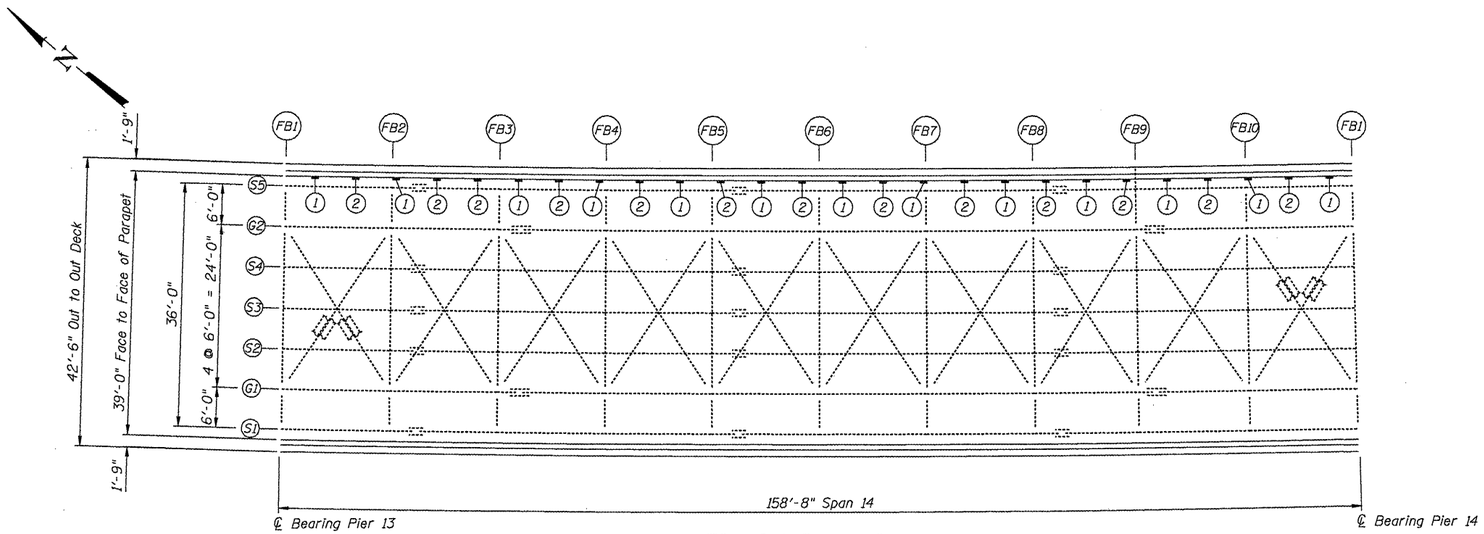

FRAMING PLAN SPAN 14

Westbound Lanes

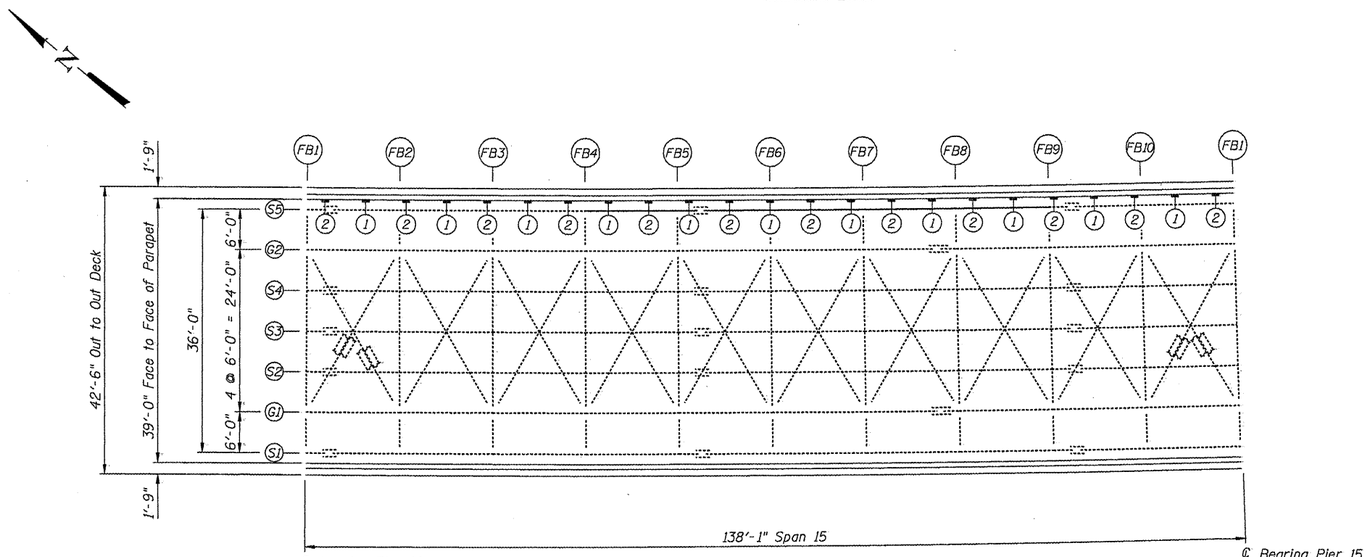

FRAMING PLAN SPAN 15

Westbound Lanes

BILL OF MATERIAL

Item	Unit	Quantity
Hot-Mix Asphalt Wearing Surface Removal, Deck	Sq. Yd	1,286
Bridge Deck Scarification, $\frac{3}{4}$"	Sq. Yd	1,286
Bridge Deck Latex Concrete Overlay, $2\frac{1}{4}$"	Sq. Yd	1,285
Plug Existing Deck Drains	Each	24
Floor Drain Extension	Each	25

LEGEND

(1) Plug Existing Floor Drains

(2) Extend Existing Drain

FILE NAME = $FILEL$	USER NAME = $USER$	DESIGNED - JAN	REVISED -	STATE OF ILLINOIS DEPARTMENT OF TRANSPORTATION	GENERAL PLAN & REPAIR LOCATION WESTBOUND SPANS 14 & 15 S.N. 090-0109	F.A.I. RTE.	SECTION	COUNTY	TOTAL SHEETS	SHEET NO.
		CHECKED - BTC	REVISED -			474		PEORIA & TAZEWELL	129	47
	PLOT SCALE = $SCALE$	DRAWN - MJK	REVISED -					CONTRACT NO. 68069		
	PLOT DATE = $DATE$	CHECKED - JAN	REVISED -		SHEET NO. 13 OF 65 SHEETS			ILLINOIS FED. AID PROJECT		

BILL OF MATERIAL

Item	Unit	Quantity
Hot-Mix Asphalt Wearing Surface Removal, Deck	Sq. Yd.	712
Bridge Deck Scarification, $\frac{3}{4}$"	Sq. Yd.	712
Bridge Deck Latex Concrete Overlay, $2\frac{1}{4}$"	Sq. Yd.	701
Plug Existing Deck Drains	Each	11
Floor Drain Extension	Each	11
Bolt Replacement	Each	1
Structural Steel Repair	Pound	920

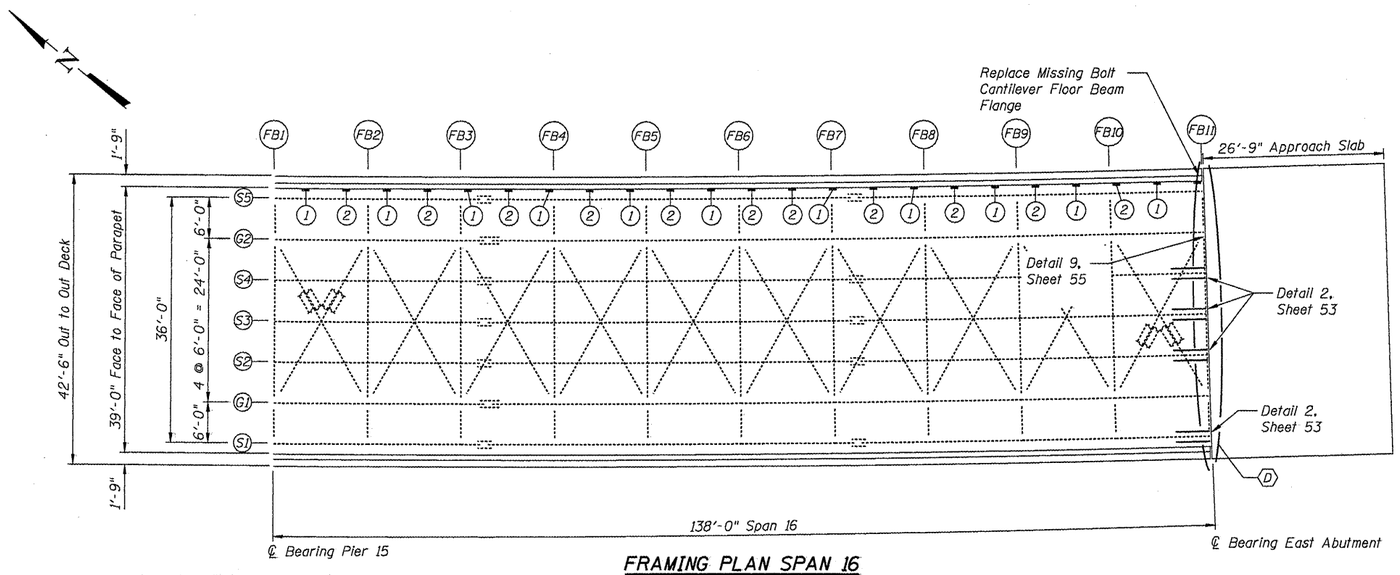

FRAMING PLAN SPAN 16

Westbound Lanes

LEGEND

(1) Plug Existing Floor Drains

(2) Extend Existing Drain

(D) Expansion Joint Trough Installation

FILE NAME = $FILEL$	USER NAME = $USER$	DESIGNED - JAN	REVISED -	STATE OF ILLINOIS DEPARTMENT OF TRANSPORTATION	GENERAL PLAN & REPAIR LOCATION WESTBOUND SPAN 16 S.N. 090-0109	F.A.I. RTE.	SECTION	COUNTY	TOTAL SHEETS / SHEET NO.
		CHECKED - BTO	REVISED -			474		PEORIA & TAZEWELL	129 / 48
	PLOT SCALE = $SCALE$	DRAWN - MJK	REVISED -					CONTRACT NO. 68069	
	PLOT DATE = $DATE$	CHECKED - JAN	REVISED -		SHEET NO. 14 OF 65 SHEETS			ILLINOIS FED. AID PROJECT	

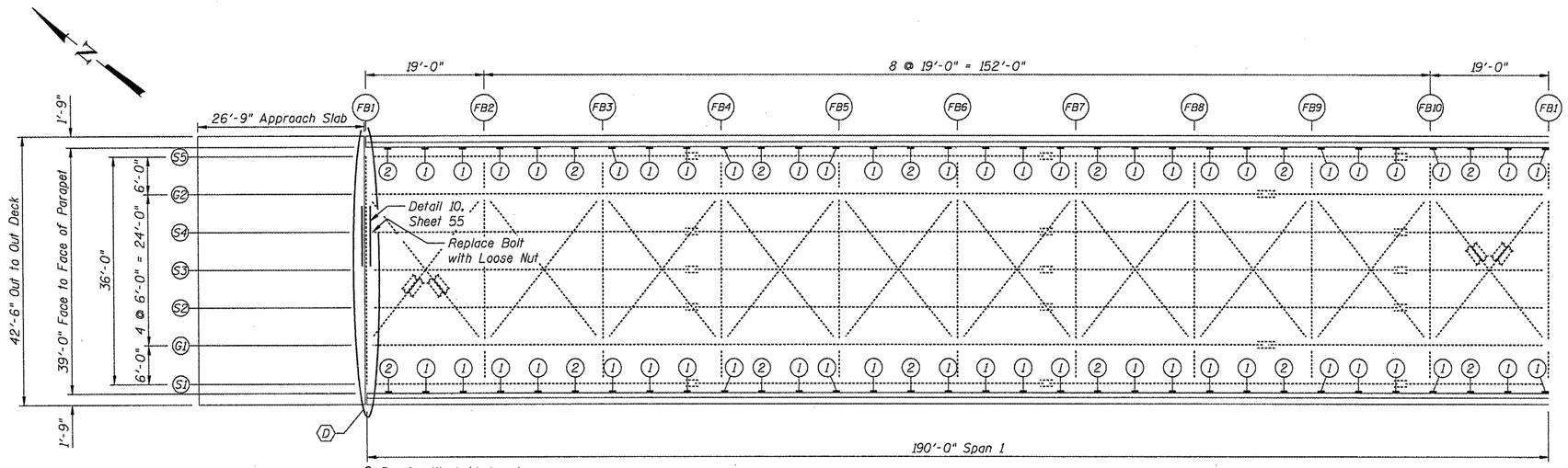

FRAMING PLAN SPAN 1

Eastbound Lanes

BILL OF MATERIAL

Item	Unit	Quantity
Hot-Mix Asphalt Wearing Surface Removal, Deck	Sq. Yd.	1,759
Bridge Deck Scarification, $\frac{3}{4}$"	Sq. Yd.	1,759
Bridge Deck Latex Concrete Overlay, $2\frac{1}{4}$"	Sq. Yd.	1,737
Plug Existing Deck Drains	Each	98
Floor Drain Extension	Each	28
Structural Steel Repair	Pound	600
Bolt Replacement	Each	1
Deck Slab Repair (Full Depth, Type II)	Sq. Yd.	2.2

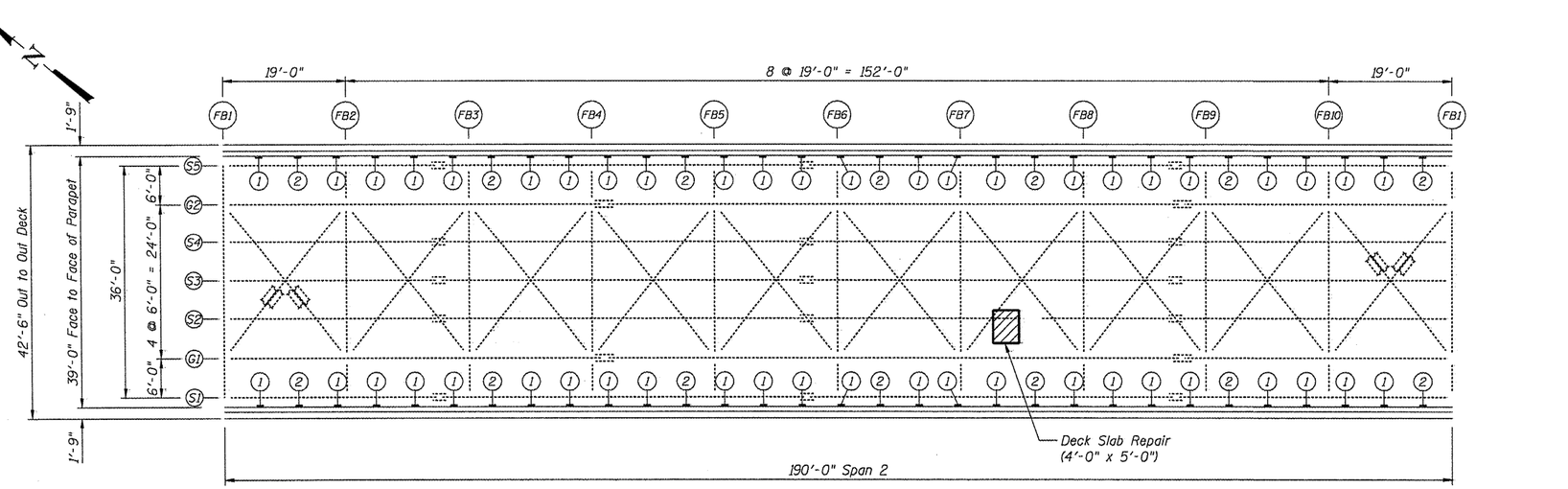

FRAMING PLAN SPAN 2

Eastbound Lanes

LEGEND

(1) Plug Existing Floor Drains

(2) Extend Existing Drain

(D) Expansion Joint Trough Installation

FILE NAME = $FILEL$	USER NAME = $USER$	DESIGNED - JAN	REVISED -	STATE OF ILLINOIS DEPARTMENT OF TRANSPORTATION	GENERAL PLAN & REPAIR LOCATION EASTBOUND SPANS 1 & 2 S.N. 090-0108	F.A.I. RTE.	SECTION	COUNTY
		CHECKED - BTO	REVISED -			474		PEORIA & TAZEWELL
	PLOT SCALE = $SCALE$	DRAWN - MJK	REVISED -					CONTRACT NO. 68069
	PLOT DATE = $DATE$	CHECKED - JAN	REVISED -		SHEET NO. 15 OF 65 SHEETS			ILLINOIS FED. AID PROJECT

TOTAL SHEETS	SHEET NO.
129	49

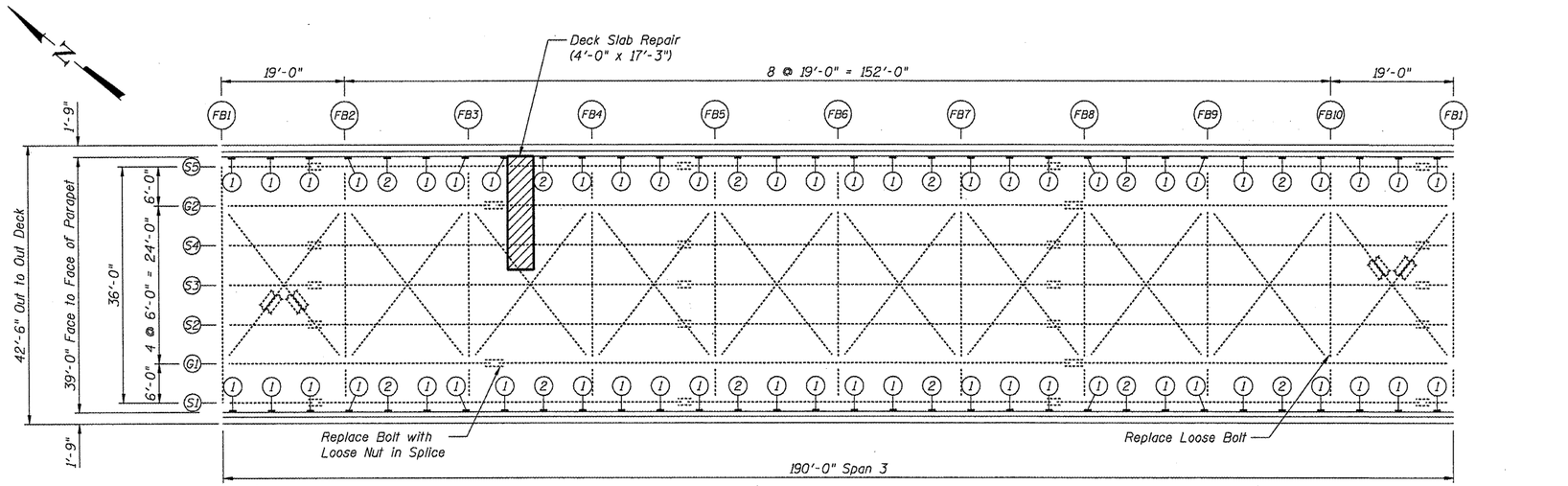

FRAMING PLAN SPAN 3

Eastbound Lanes

BILL OF MATERIAL

Item	Unit	Quantity
Hot-Mix Asphalt Wearing Surface Removal, Deck	Sq. Yd	1,646
Bridge Deck Scarification, 3/4"	Sq. Yd	1,646
Bridge Deck Latex Concrete Overlay, 2 1/4"	Sq. Yd	1,627
Plug Existing Deck Drains	Each	100
Floor Drain Extension	Each	26
Bolt Replacement	Each	2
**Deck Slab Repair (Partial)	Sq. Yd	17.9
Deck Slab Repair (Full Depth, Type II)	Sq. Yd	6.0

** For Information only.

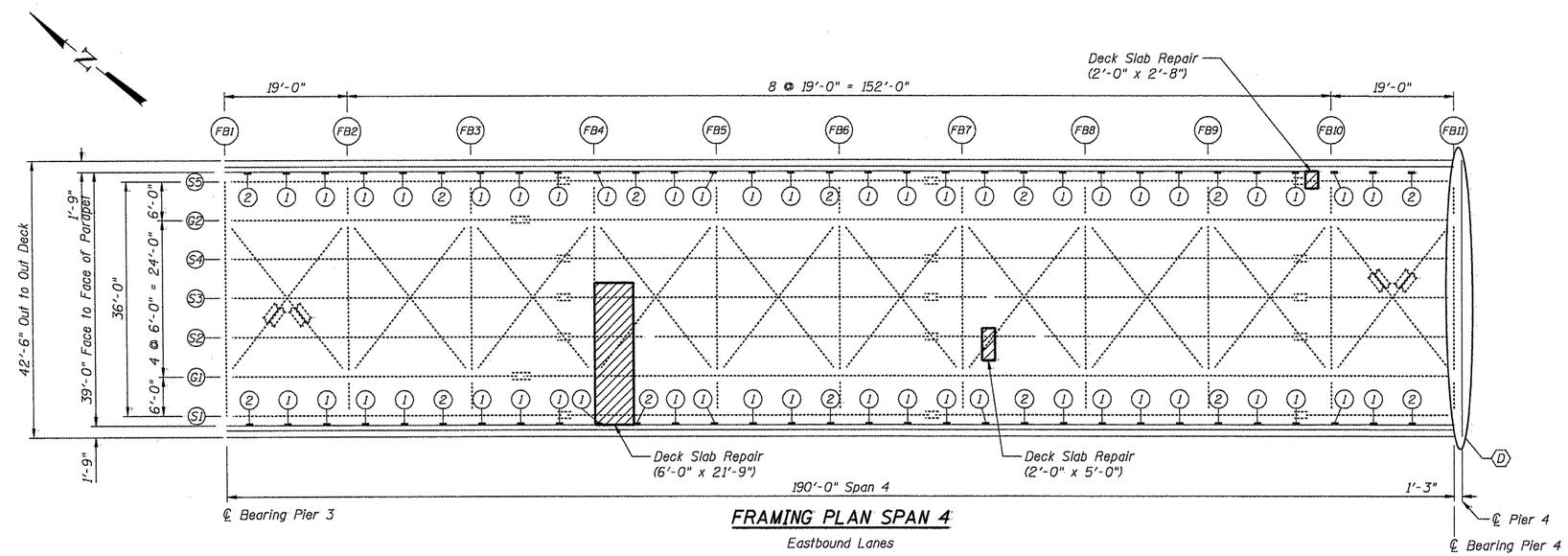

FRAMING PLAN SPAN 4

Eastbound Lanes

LEGEND

(1) Plug Existing Floor Drains

(2) Extend Existing Drain

(D) Expansion Joint Trough Installation

FILE NAME = $FILEL$	USER NAME = $USER$	DESIGNED - JAN	REVISED -	STATE OF ILLINOIS DEPARTMENT OF TRANSPORTATION	GENERAL PLAN & REPAIR LOCATION EASTBOUND SPANS 3 & 4 S.N. 090-0108	F.A.I. RTE. 474	SECTION	COUNTY PEORIA & TAZEWELL	TOTAL SHEETS 189 / SHEET NO. 50
		CHECKED - BTO	REVISED -					CONTRACT NO. 68069	
	PLOT SCALE = $SCALE$	DRAWN - NJK	REVISED -						
	PLOT DATE = $DATE$	CHECKED - JAN	REVISED -		SHEET NO. 16 OF 65 SHEETS			ILLINOIS FED. AID PROJECT	

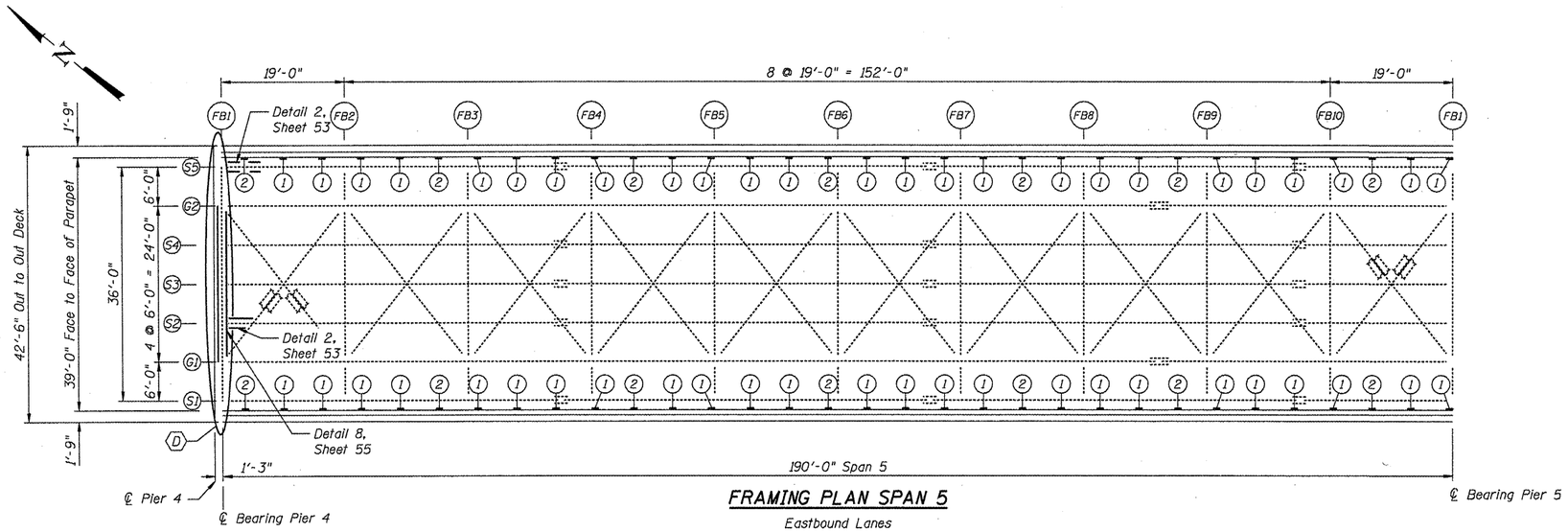

FRAMING PLAN SPAN 5

Eastbound Lanes

BILL OF MATERIAL

Item	Unit	Quantity
Hot-Mix Asphalt Wearing Surface Removal, Deck	Sq. Yd	1,646
Bridge Deck Scarification, $\frac{3}{4}$"	Sq. Yd	1,646
Bridge Deck Latex Concrete Overlay, $2\frac{1}{4}$"	Sq. Yd	1,636
Plug Existing Deck Drains	Each	94
Floor Drain Extension	Each	32
Structural Steel Repair	Pound	1,600
**Deck Slab Repair (Partial)	Sq. Yd	4.7
Deck Slab Repair (Full Depth, Type II)	Sq. Yd	1.6

** For Information only.

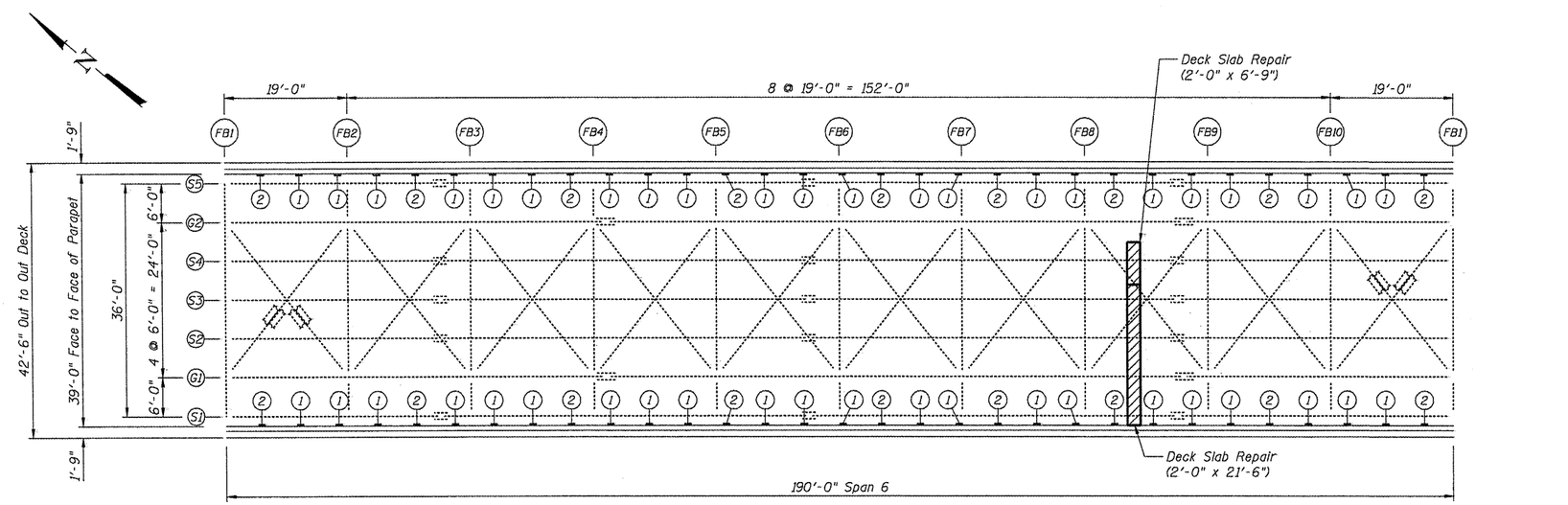

FRAMING PLAN SPAN 6

Eastbound Lanes

LEGEND

(1) Plug Existing Floor Drains

(2) Extend Existing Drain

(D) Expansion Joint Trough Installation

FILE NAME = $FILEL$	USER NAME = $USER$	DESIGNED - JAN	REVISED -
		CHECKED - BTO	REVISED -
	PLOT SCALE = $SCALE$	DRAWN - NJK	REVISED -
	PLOT DATE = $DATE$	CHECKED - JAN	REVISED -

STATE OF ILLINOIS
DEPARTMENT OF TRANSPORTATION

GENERAL PLAN & REPAIR LOCATION
EASTBOUND SPANS 5 & 6 S.N. 090-0108

SHEET NO. 17 OF 65 SHEETS

F.A.I. RTE.	SECTION	COUNTY	TOTAL SHEETS	SHEET NO.
474		PEORIA & TAZEWELL	129	51
		CONTRACT NO. 68069		
		ILLINOIS FED. AID PROJECT		

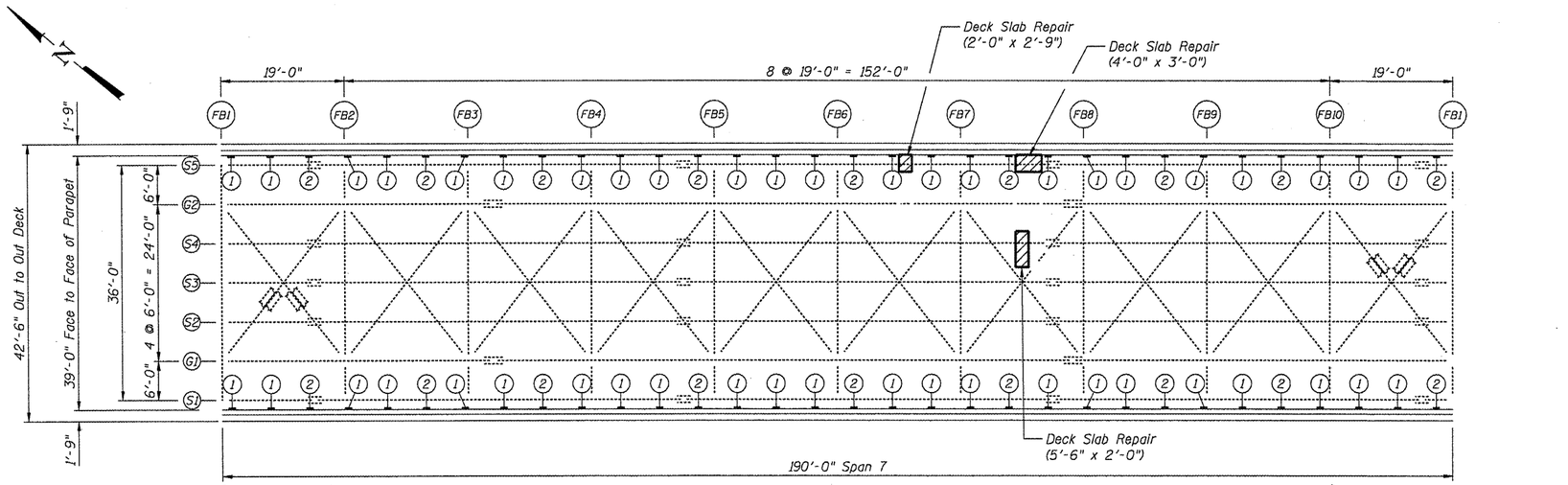

FRAMING PLAN SPAN 7

Eastbound Lanes

BILL OF MATERIAL

Item	Unit	Quantity
Hot-Mix Asphalt Wearing Surface Removal, Deck	Sq. Yd.	1,644
Bridge Deck Scarification, $\frac{3}{4}$"	Sq. Yd.	1,644
Bridge Deck Latex Concrete Overlay, $2\frac{1}{4}$"	Sq. Yd.	1,638
Plug Existing Deck Drains	Each	88
Floor Drain Extension	Each	38
Structural Steel Repair	Pound	1,180
**Deck Slab Repair (Partial)	Sq. Yd.	2.4
Deck Slab Repair (Full Depth, Type II)	Sq. Yd.	0.8

** For Information only.

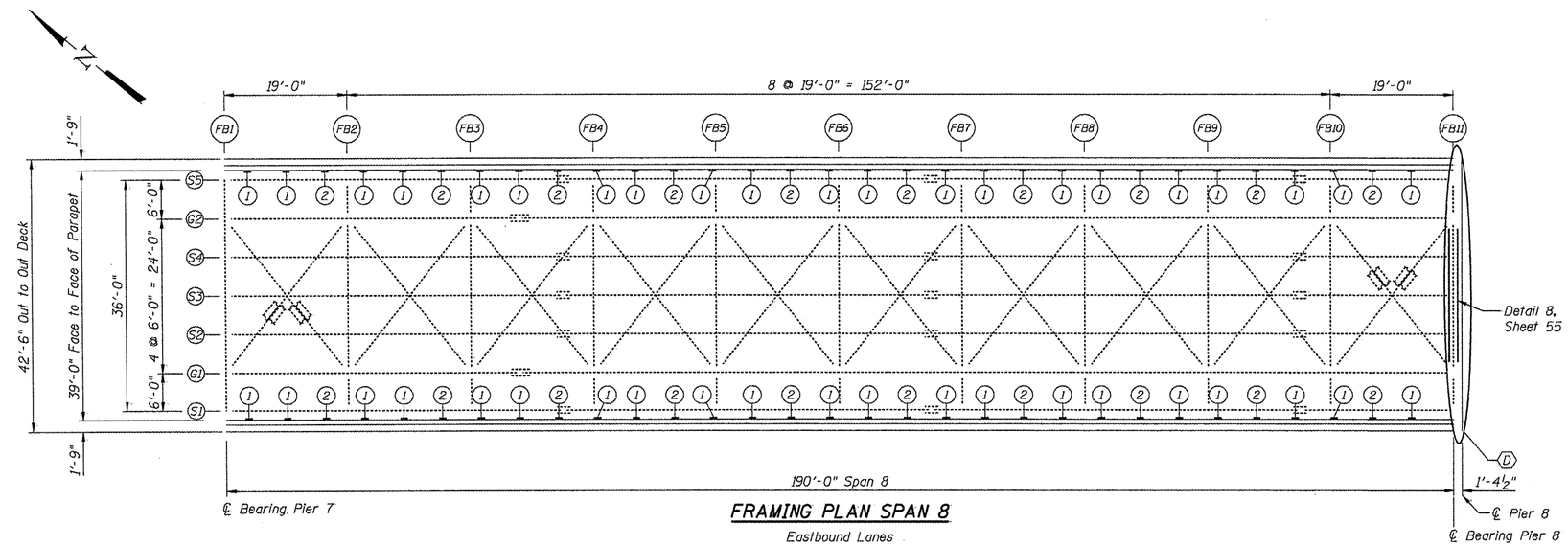

FRAMING PLAN SPAN 8

Eastbound Lanes

LEGEND

(1) Plug Existing Floor Drains

(2) Extend Existing Drain

(D) Expansion Joint Trough Installation

FILE NAME = $FILEL$	USER NAME = $USER$	DESIGNED - JAN	REVISED -	STATE OF ILLINOIS DEPARTMENT OF TRANSPORTATION	GENERAL PLAN & REPAIR LOCATION EASTBOUND SPANS 7 & 8 S.N. 090-0108	F.A.I. RTE.	SECTION	COUNTY	TOTAL SHEETS / SHEET NO.
		CHECKED - BTO	REVISED -			474		PEORIA & TAZEWELL	129 / 52
	PLOT SCALE = $SCALE$	DRAWN - MJK	REVISED -					CONTRACT NO. 68069	
	PLOT DATE = $DATE$	CHECKED - JAN	REVISED -		SHEET NO. 18 OF 65 SHEETS			ILLINOIS FED. AID PROJECT	

BILL OF MATERIAL

Item	Unit	Quantity
Hot-Mix Asphalt Wearing Surface Removal, Deck	Sq. Yd.	1,044
Bridge Deck Scarification, 3/4"	Sq. Yd.	1,044
Bridge Deck Latex Concrete Overlay, 2 1/4"	Sq. Yd.	1,011
Plug Existing Deck Drains	Each	40
Floor Drains	Each	40
Structural Steel Repair	Pound	2,980
Deck Slab Repair (Full Depth Type II)	Sq. Yd.	0.6
Bolt Replacement	Each	3
*Deck Slab Repair (Full Depth Type I)	Sq. Yd.	10.7

* At Floor Drain Replacement Locations

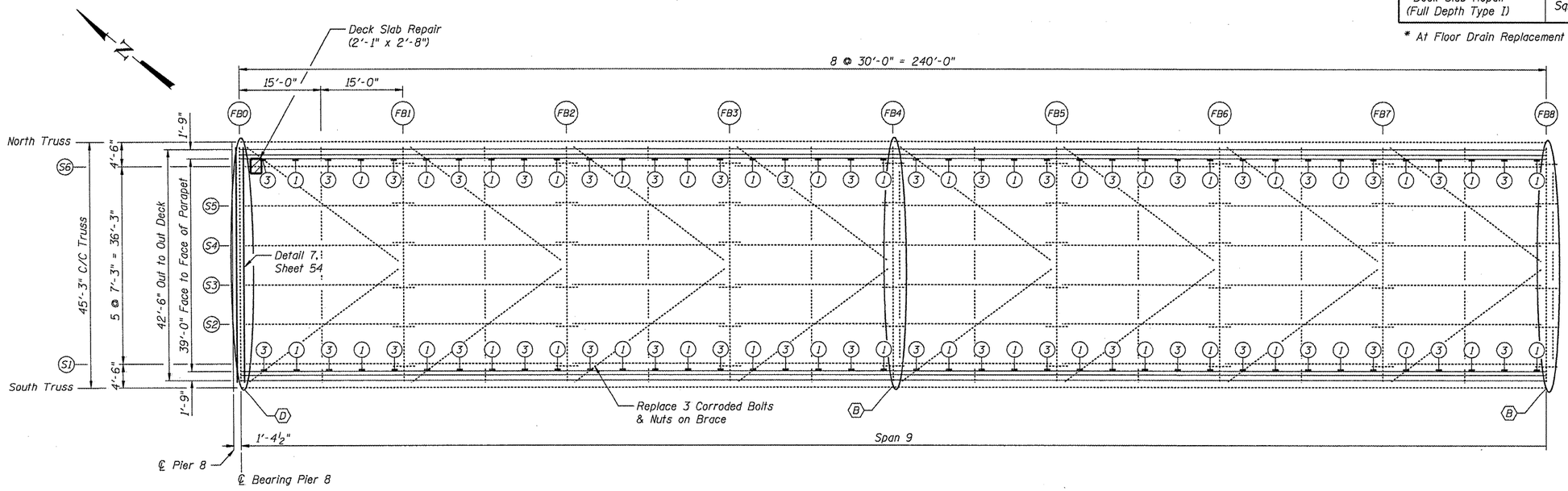

PARTIAL FRAMING PLAN SPAN 9

Eastbound Lanes

LEGEND

(1) Plug Existing Floor Drains

(3) Remove Existing Floor Drain and Install new 6"ϕ Drain

⟨B⟩ Replace Existing Relief Joints with Preformed Joint Strip Seal.

⟨D⟩ Expansion Joint Trough Installation

FILE NAME = $FILEL$	USER NAME = $USER$	DESIGNED - JAN	REVISED -	STATE OF ILLINOIS DEPARTMENT OF TRANSPORTATION	GENERAL PLAN & REPAIR LOCATION EASTBOUND SPAN 9 FB0 TO FB8 S.N. 090-0108	F.A.I. RTE. 474	SECTION	COUNTY PEORIA & TAZEWELL	TOTAL SHEETS 129	SHEET NO. 53
		CHECKED - BTO	REVISED -							
	PLOT SCALE = $SCALE$	DRAWN - NJK	REVISED -					CONTRACT NO. 68069		
	PLOT DATE = $DATE$	CHECKED - JAN	REVISED -		SHEET NO. 19 OF 65 SHEETS			ILLINOIS FED. AID PROJECT		

BILL OF MATERIAL

Item	Unit	Quantity
Hot-Mix Asphalt Wearing Surface Removal, Deck	Sq. Yd.	894
Bridge Deck Scarification, $\frac{3}{4}$"	Sq. Yd.	894
Bridge Deck Latex Concrete Overlay, $2\frac{1}{4}$"	Sq. Yd.	867
Plug Existing Deck Drains	Each	34
Floor Drains	Each	36
Structural Steel Repair	Pound	4,500
*Deck Slab Repair (Full Depth Type I)	Sq. Yd.	9.7

* At Floor Drain Replacement Locations

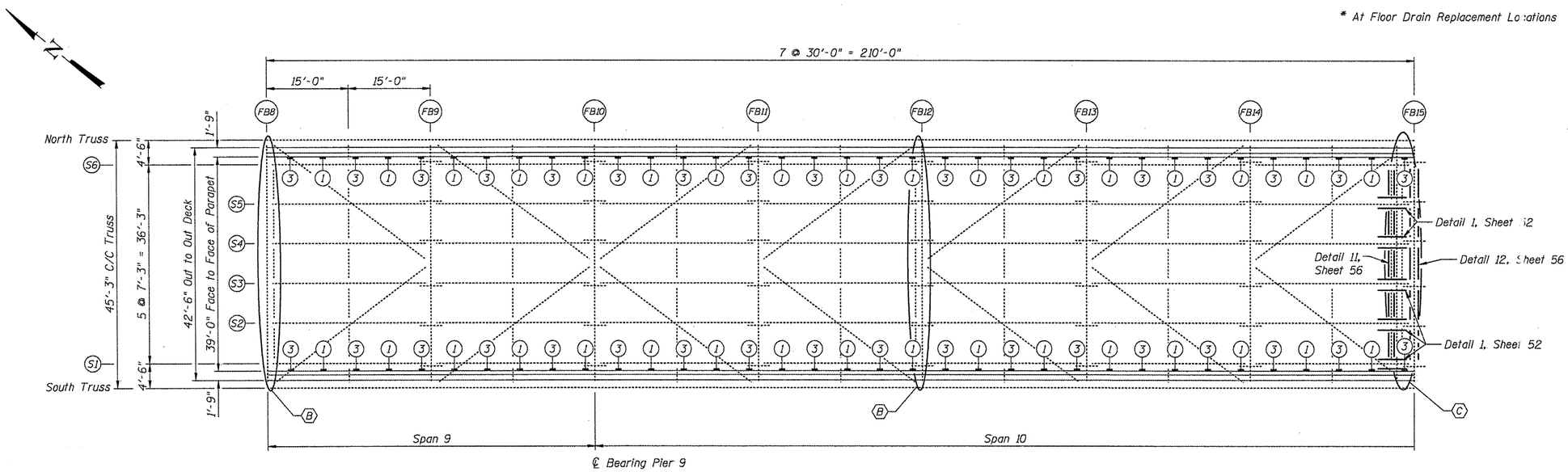

PARTIAL FRAMING PLAN SPANS 9 & 10

Eastbound Lanes

LEGEND

(1) Plug Existing Floor Drains

(3) Remove Existing Floor Drain and Install new 6"ϕ Drain

⟨B⟩ Replace Existing Relief Joints with Preformed Joint Strip Seal.

⟨C⟩ Replace Existing Finger Joints with Preformed Joint Strip Seal.

FILE NAME = $FILEL$	USER NAME = $USER$	DESIGNED - JAN	REVISED -	STATE OF ILLINOIS DEPARTMENT OF TRANSPORTATION	GENERAL PLAN & REPAIR LOCATION EASTBOUND SPANS 9 & 10 FB8 TO FB15 S.N. 090-0108	F.A.I. RTE.	SECTION	COUNTY	TOTAL SHEETS / SHEET NO.
		CHECKED - BTO	REVISED -			474		PEORIA & TAZEWELL	129 / 54
	PLOT SCALE = $SCALE$	DRAWN - NJK	REVISED -					CONTRACT NO. 68069	
	PLOT DATE = $DATE$	CHECKED - JAN	REVISED -		SHEET NO. 20 OF 65 SHEETS			ILLINOIS FED. AID PROJECT	

BILL OF MATERIAL

Item	Unit	Quantity
Hot-Mix Asphalt Wearing Surface Removal, Deck	Sq. Yd.	1,044
Bridge Deck Scarification, 3/4"	Sq. Yd.	1,044
Bridge Deck Latex Concrete Overlay, 2 1/4"	Sq. Yd.	1,013
Plug Existing Deck Drains	Each	40
Floor Drains	Each	40
Structural Steel Repair	Pound	1,080
*Deck Slab Repair (Full Depth Type I)	Sq. Yd.	10.7

* At Floor Drain Replacement Locations

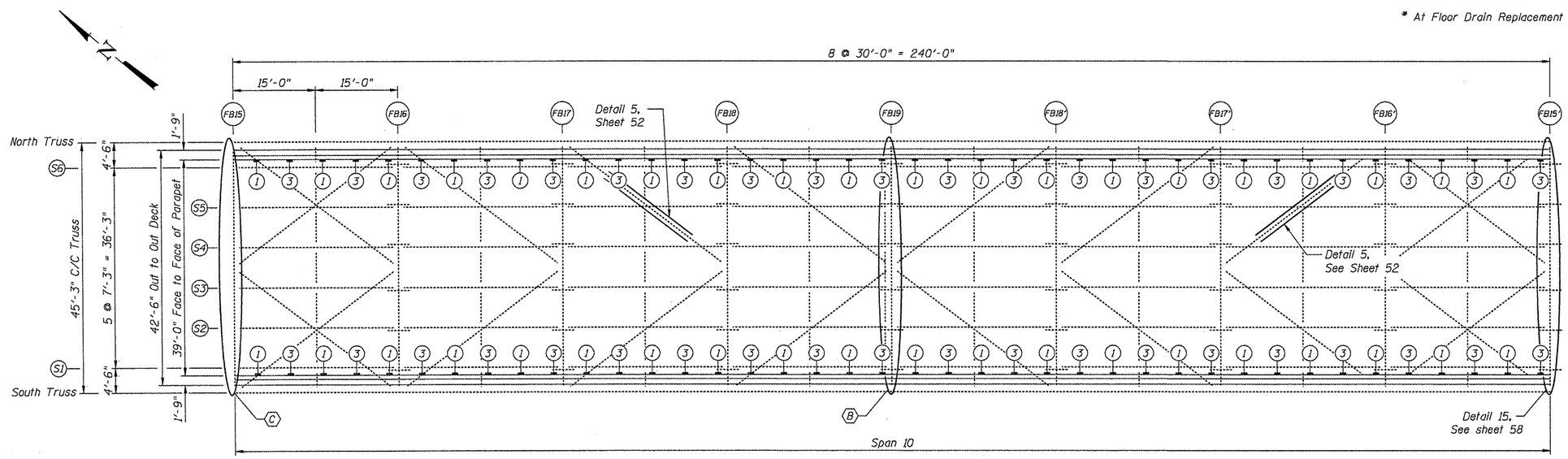

PARTIAL FRAMING PLAN SPAN 10

Eastbound Lanes

LEGEND

(1) Plug Existing Floor Drains

(3) Remove Existing Floor Drain and Install new 6"ϕ Drain

⟨B⟩ Replace Existing Relief Joints with Preformed Joint Strip Seal.

⟨C⟩ Replace Existing Finger Joints with Preformed Joint Strip Seal.

FILE NAME = $FILEL$	USER NAME = $USER$	DESIGNED - JAN	REVISED -	STATE OF ILLINOIS DEPARTMENT OF TRANSPORTATION	GENERAL PLAN & REPAIR LOCATION EASTBOUND SPAN 10 FB15 TO FB15' S.N. 090-0108	F.A.I. RTE. 474	SECTION	COUNTY PEORIA & TAZEWELL	TOTAL SHEETS 69 / SHEET NO. 25
		CHECKED - BTO	REVISED -						
	PLOT SCALE = $SCALE$	DRAWN - NJK	REVISED -					CONTRACT NO. 68069	
	PLOT DATE = $DATE$	CHECKED - JAN	REVISED -		SHEET NO. 21 OF 65 SHEETS			ILLINOIS FED. AID PROJECT	

BILL OF MATERIAL

Item	Unit	Quantity
Hot-Mix Asphalt Wearing Surface Removal, Deck	Sq. Yd.	894
Bridge Deck Scarification, $\frac{3}{4}$"	Sq. Yd.	894
Bridge Deck Latex Concrete Overlay, $2\frac{1}{4}$"	Sq. Yd.	874
Plug Existing Deck Drains	Each	36
Floor Drains	Each	34
Structural Steel Repair	Pound	1,150
Bolt Replacement	Each	20
*Deck Slab Repair (Full Depth Type I)	Sq. Yd.	9.1

* At Floor Drain Replacement Locations

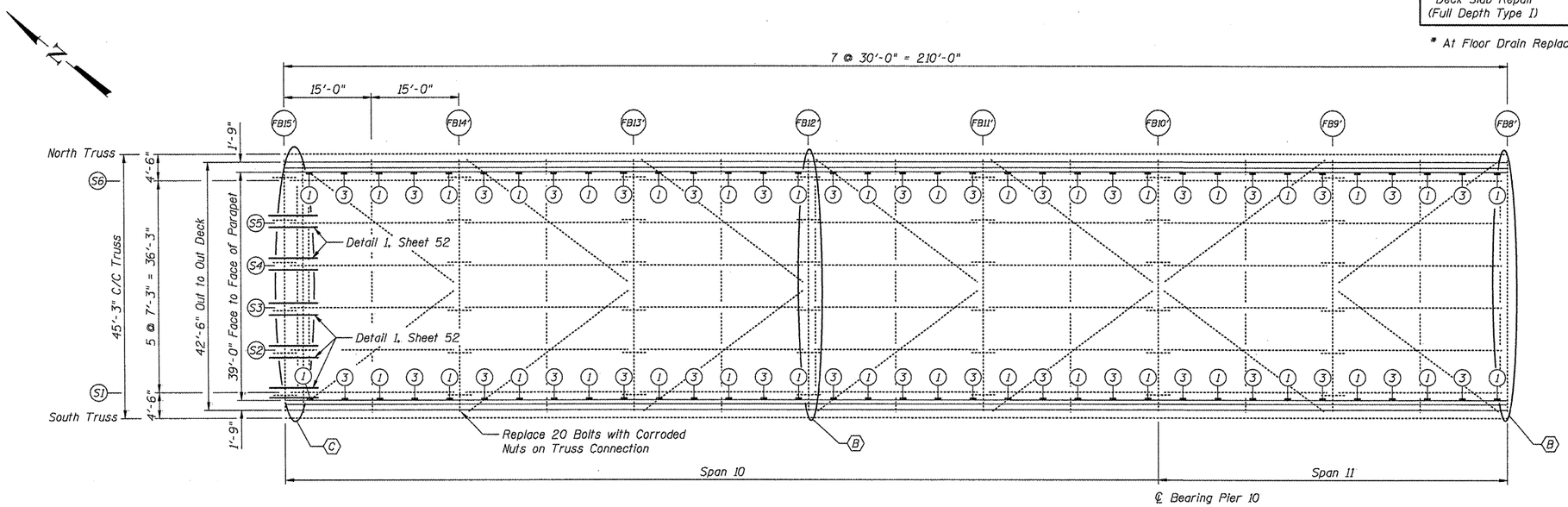

PARTIAL FRAMING PLAN SPANS 10 & 11

Eastbound Lanes

LEGEND

(1) Plug Existing Floor Drains

(3) Remove Existing Floor Drain and Install new 6"ϕ Drain

⟨B⟩ Replace Existing Relief Joints with Preformed Joint Strip Seal.

⟨C⟩ Replace Existing Finger Joints with Preformed Joint Strip Seal.

FILE NAME = $FILEL$	USER NAME = $USER$	DESIGNED - JAN	REVISED -	STATE OF ILLINOIS DEPARTMENT OF TRANSPORTATION	GENERAL PLAN & REPAIR LOCATION EASTBOUND SPANS 10 & 11 FB15' TO FB8' S.N. 090-0108	F.A.I. RTE. 474	SECTION	COUNTY PEORIA & TAZEWELL	TOTAL SHEETS 129	SHEET NO. 56
		CHECKED - BTO	REVISED -							
	PLOT SCALE = $SCALE$	DRAWN - NJK	REVISED -					CONTRACT NO. 68069		
	PLOT DATE = $DATE$	CHECKED - JAN	REVISED -		SHEET NO. 22 OF 65 SHEETS			ILLINOIS FED. AID PROJECT		

BILL OF MATERIAL

Item	Unit	Quantity
Hot-Mix Asphalt Wearing Surface Removal, Deck	Sq. Yd	1,044
Bridge Deck Scarification, $\frac{3}{4}$"	Sq. Yd	1,044
Bridge Deck Latex Concrete Overlay, $2\frac{1}{4}$"	Sq. Yd	1,008
Plug Existing Deck Drains	Each	40
Floor Drains	Each	40
*Deck Slab Repair (Full Depth Type I)	Sq. Yd	10.7

* At Floor Drain Replacement Locations

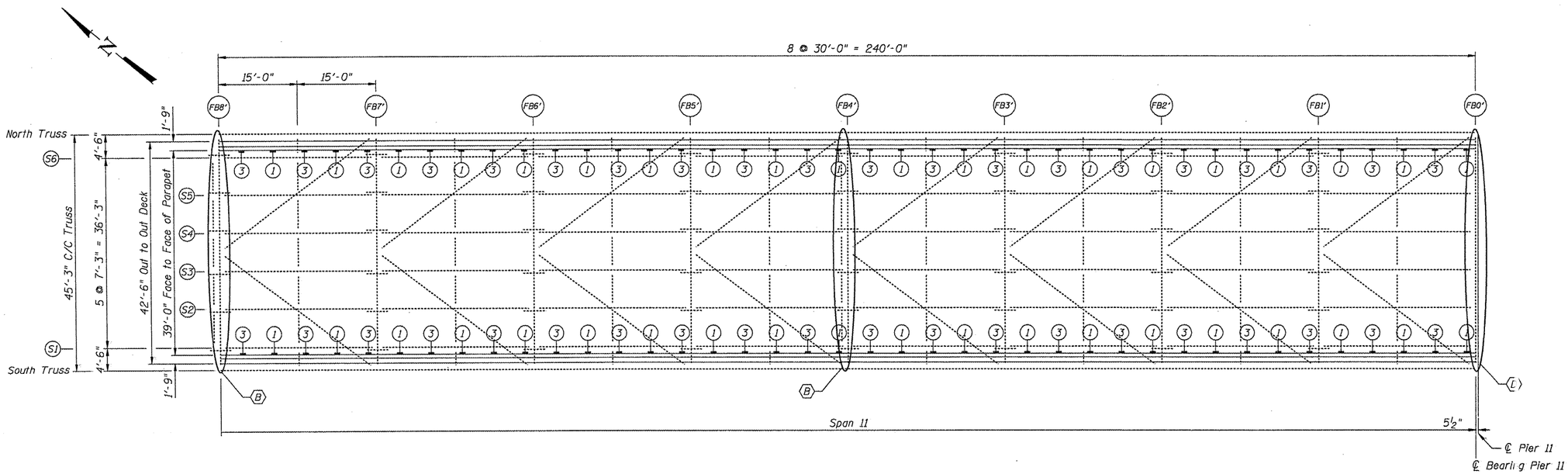

PARTIAL FRAMING PLAN SPAN 11

Eastbound Lanes

LEGEND

(1) Plug Existing Floor Drains

(3) Remove Existing Floor Drain and Install new 6"ϕ Drain

(B) Replace Existing Relief Joints with Preformed Joint Strip Seal.

(D) Expansion Joint Trough Installation

FILE NAME = $FILEL$	USER NAME = $USER$	DESIGNED - JAN	REVISED -	STATE OF ILLINOIS DEPARTMENT OF TRANSPORTATION	GENERAL PLAN & REPAIR LOCATION EASTBOUND SPAN 11 FB8' TO FB0' S.N. 090-0108	F.A.I. RTE. 474	SECTION	COUNTY PEORIA & TAZEWELL	TOTAL SHEETS 129	SHEET NO. 57
		CHECKED - BTQ	REVISED -						CONTRACT NO. 68069	
	PLOT SCALE = $SCALE$	DRAWN - NJK	REVISED -							
	PLOT DATE = $DATE$	CHECKED - JAN	REVISED -		SHEET NO. 23 OF 65 SHEETS			ILLINOIS	FED. AID PROJECT	

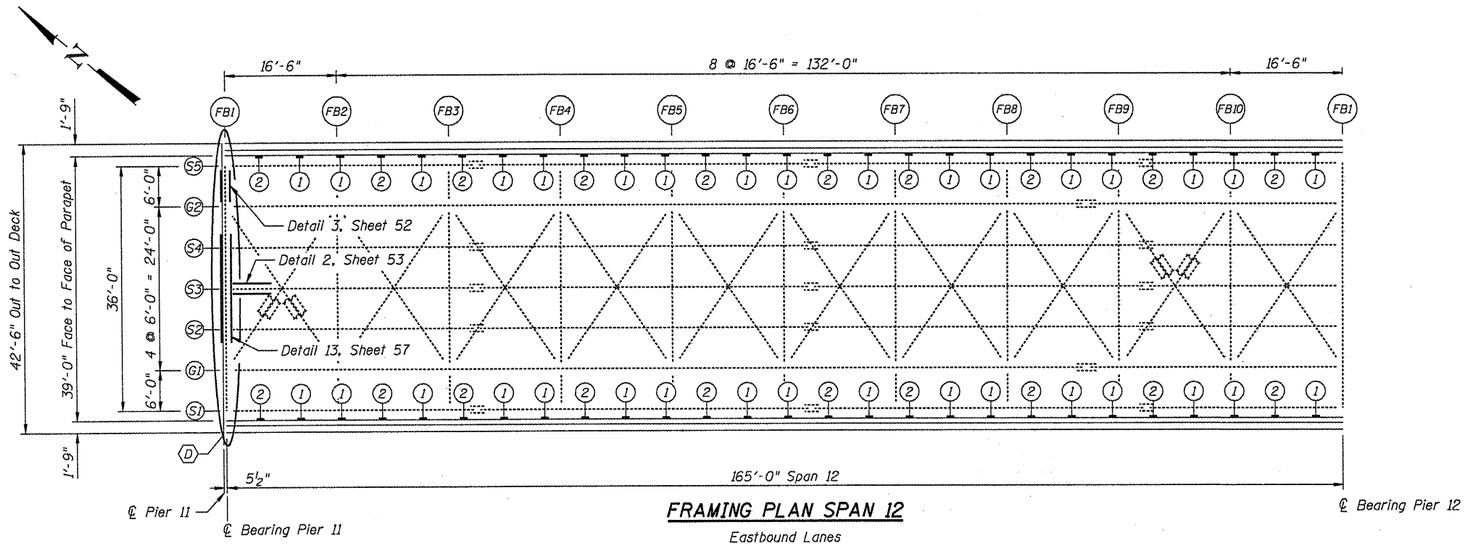

FRAMING PLAN SPAN 12

Eastbound Lanes

BILL OF MATERIAL

Item	Unit	Quantity
Hot-Mix Asphalt Wearing Surface Removal, Deck	Sq. Yd.	1,430
Bridge Deck Scarification, ¾"	Sq. Yd.	1,430
Bridge Deck Latex Concrete Overlay, 2¼"	Sq. Yd.	1,425
Plug Existing Deck Drains	Each	61
Floor Drain Extension	Each	36
Structural Steel Repair	Pound	1,040
Deck Slab Repair (Full Depth, Type II)	Sq. Yd.	1.2

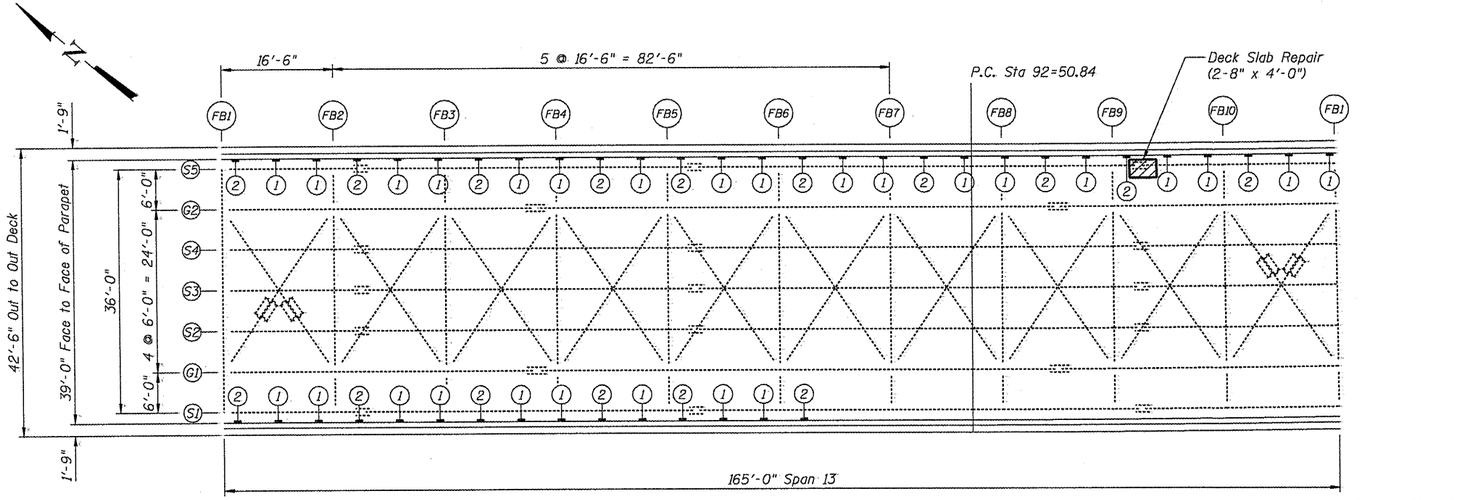

FRAMING PLAN SPAN 13

Eastbound Lanes

LEGEND

(1) Plug Existing Floor Drains

(2) Extend Existing Drain

(D) Expansion Joint Trough Installation

FILE NAME = $FILEL$	USER NAME = $USER$	DESIGNED - JAN	REVISED -	STATE OF ILLINOIS DEPARTMENT OF TRANSPORTATION	GENERAL PLAN & REPAIR LOCATION EASTBOUND SPANS 12 & 13 S.N. 090-0108	F.A.I. RTE.	SECTION	COUNTY	TOTAL SHEETS	SHEET NO.
		CHECKED - BTO	REVISED -			474		PEORIA & TAZEWELL	129	58
	PLOT SCALE = $SCALE$	DRAWN - MJK	REVISED -					CONTRACT NO. 68069		
	PLOT DATE = $DATE$	CHECKED - JAN	REVISED -		SHEET NO. 24 OF 65 SHEETS			ILLINOIS FED. AID PROJECT		

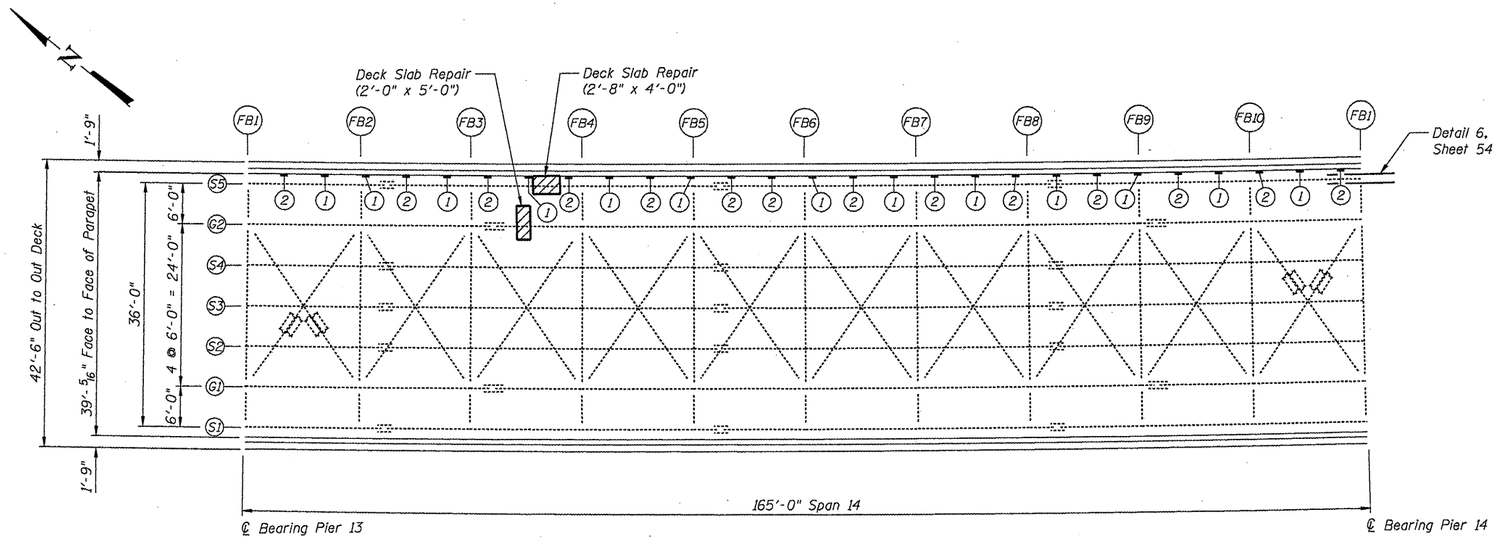

FRAMING PLAN SPAN 14

Eastbound Lanes

BILL OF MATERIAL

Item	Unit	Quantity
Hot-Mix Asphalt Wearing Surface Removal, Deck	Sq. Yd.	1,284
Bridge Deck Scarification, 3/4"	Sq. Yd.	1,284
Bridge Deck Latex Concrete Overlay, 2 1/4"	Sq. Yd.	1,285
Plug Existing Deck Drains	Each	24
Floor Drain Extension	Each	25
Structural Steel Repair	Pound	420
**Deck Slab Repair (Partial)	Sq. Yd.	2.6
Deck Slab Repair (Full Depth, Type II)	Sq. Yd.	0.9

** For Information only.

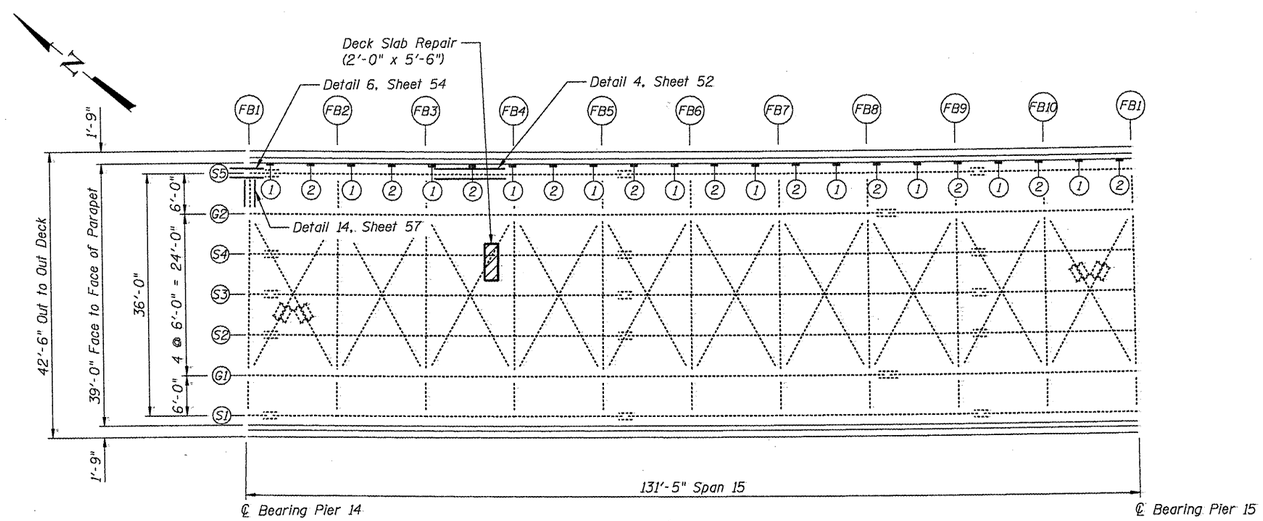

FRAMING PLAN SPAN 15

Eastbound Lanes

LEGEND

(1) Plug Existing Floor Drains

(2) Extend Existing Drain

FILE NAME = $FILEL$	USER NAME = $USER$	DESIGNED - JAN	REVISED -	STATE OF ILLINOIS DEPARTMENT OF TRANSPORTATION	GENERAL PLAN & REPAIR LOCATION EASTBOUND SPANS 14 & 15 S.N. 090-0108	F.A.I. RTE. 474	SECTION	COUNTY PEORIA & TAZEWELL	TOTAL SHEETS 129 / SHEET NO. 59
		CHECKED - BTO	REVISED -						
	PLOT SCALE = $SCALE$	DRAWN - MJK	REVISED -					CONTRACT NO. 68069	
	PLOT DATE = $DATE$	CHECKED - JAN	REVISED -		SHEET NO. 25 OF 65 SHEETS			ILLINOIS FED. AID PROJECT	

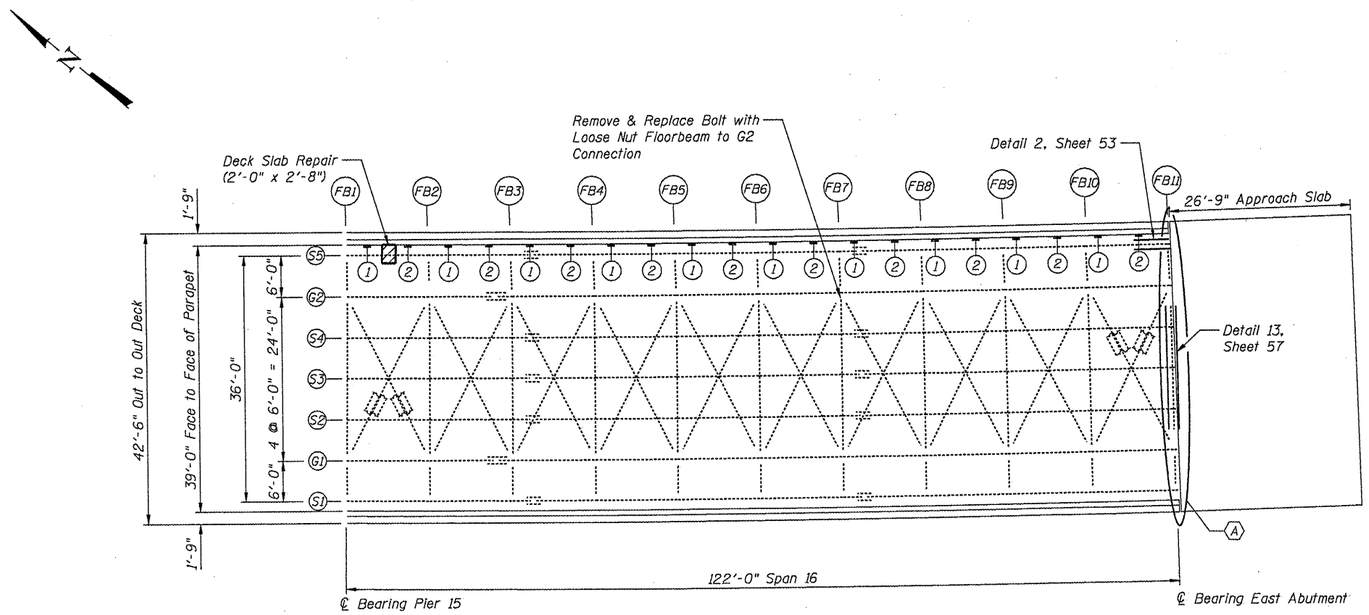

FRAMING PLAN SPAN 16

Eastbound Lanes

BILL OF MATERIAL

Item	Unit	Quantity
Hot-Mix Asphalt Wearing Surface Removal, Deck	Sq. Yd.	643
Bridge Deck Scarification, $\frac{3}{4}$"	Sq. Yd.	643
Bridge Deck Latex Concrete Overlay, $2\frac{1}{4}$"	Sq. Yd.	633
Plug Existing Deck Drains	Each	10
Floor Drain Extension	Each	10
Structural Steel Repair	Pound	940
Bolt Replacement	Each	1
Deck Slab Repair (Full Depth, Type II)	Sq. Yd.	0.6

LEGEND

1. Plug Existing Floor Drains
2. Extend Existing Drain
A. Finger Plate Expansion Joint Replacement

FILE NAME = $FILEL$	USER NAME = $USER$	DESIGNED - JAN	REVISED -	STATE OF ILLINOIS DEPARTMENT OF TRANSPORTATION	GENERAL PLAN & REPAIR LOCATION EASTBOUND SPAN 16 S.N. 090-0108	F.A.I. RTE. 474	SECTION	COUNTY PEORIA & TAZEWELL	TOTAL SHEETS 129	SHEET NO. 60
		CHECKED - BTO	REVISED -							
	PLOT SCALE = $SCALE$	DRAWN - NJK	REVISED -					CONTRACT NO. 68069		
	PLOT DATE = $DATE$	CHECKED - JAN	REVISED -		SHEET NO. 26 OF 65 SHEETS			ILLINOIS FED. AID PROJECT		

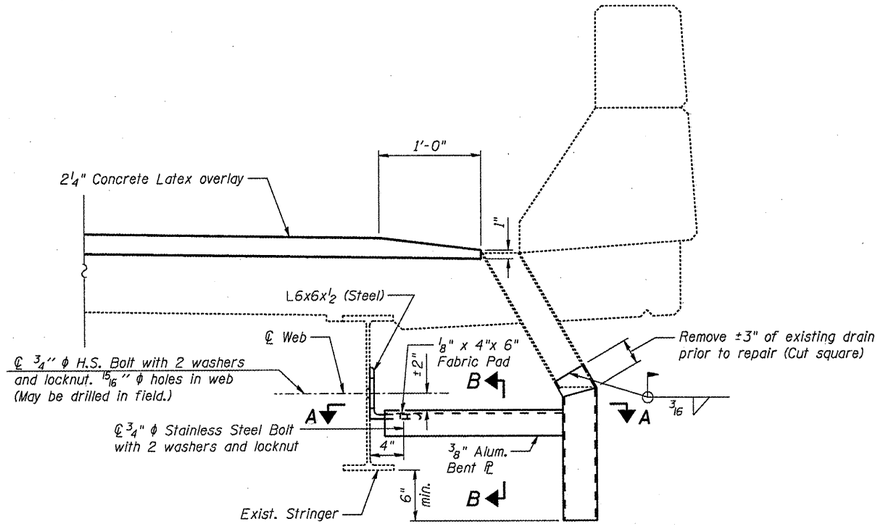

APPROACH DRAIN DETAIL

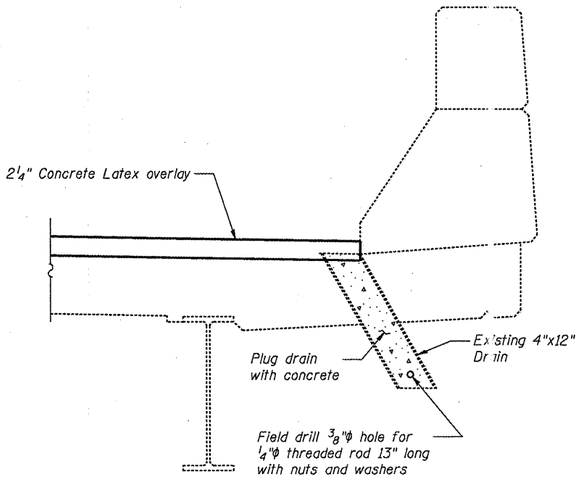

APPROACH DRAIN ELIMINATION DETAIL

Threaded rod, nuts, washers, and concrete shall be paid for as PLUG EXISTING DECK DRAINS.

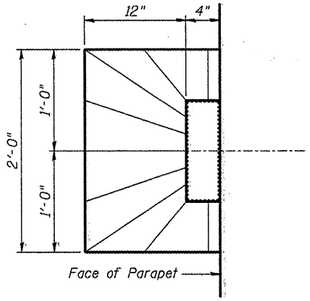

TOP PLAN

Overlay sloping

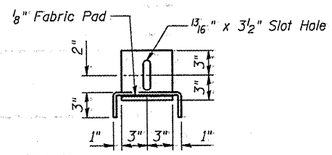

SECTION B-B

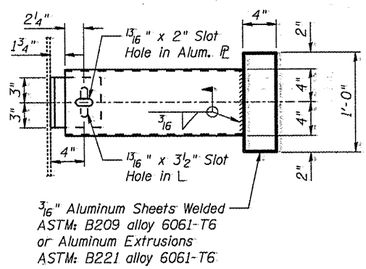

SECTION A-A

FILE NAME =	USER NAME =	DESIGNED - BTO	REVISED -	STATE OF ILLINOIS DEPARTMENT OF TRANSPORTATION	APPROACH DECK DRAIN REPAIR DETAILS STRUCTURE NO. 090-0108 & 090-0109	F.A.I. RTE.	SECTION	COUNTY	TOTAL SHEETS	SHEET NO.
		CHECKED - JAN	REVISED -			474		PEORIA & TAZEWELL	129	61
	PLOT SCALE =	DRAWN - BTO	REVISED -					CONTRACT NO. 68069		
	PLOT DATE =	CHECKED - JAN	REVISED -		SHEET NO. 27 OF 65 SHEETS			ILLINOIS FED. AID PROJECT		

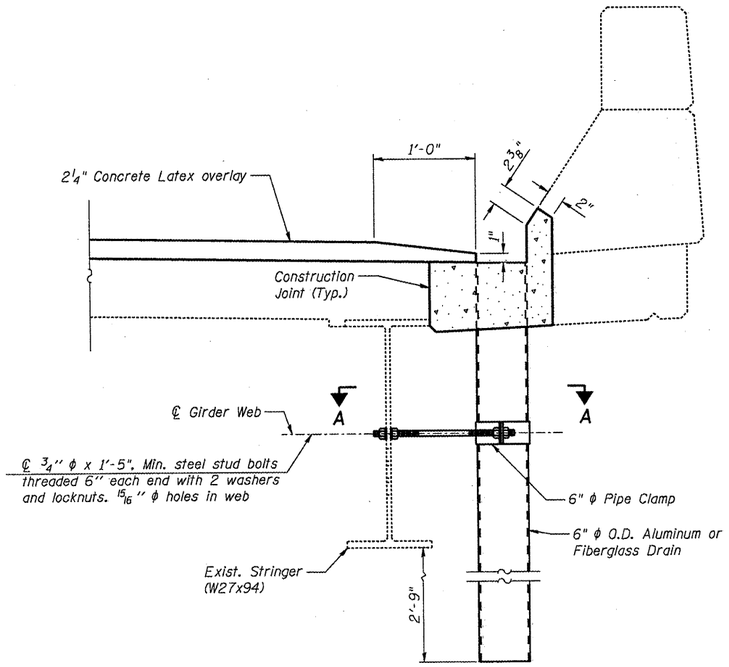

TRUSS DRAIN REPLACEMENT DETAIL

Concrete removal and replacement shall be paid for as DECK SLAB REPAIR (FULL DEPTH, TYPE I).

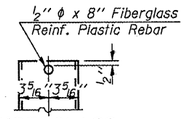

FIBERGLASS PIPE

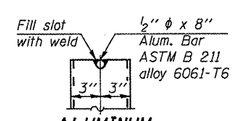

ALUMINUM TUBE

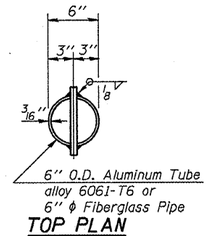

TOP PLAN

(Showing Aluminum Tube)

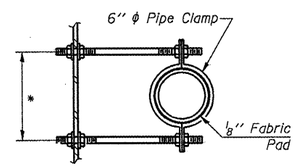

SECTION A-A

* Dimension as required by Pipe Clamp

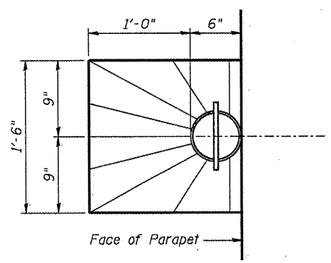

TOP PLAN

Overlay sloping

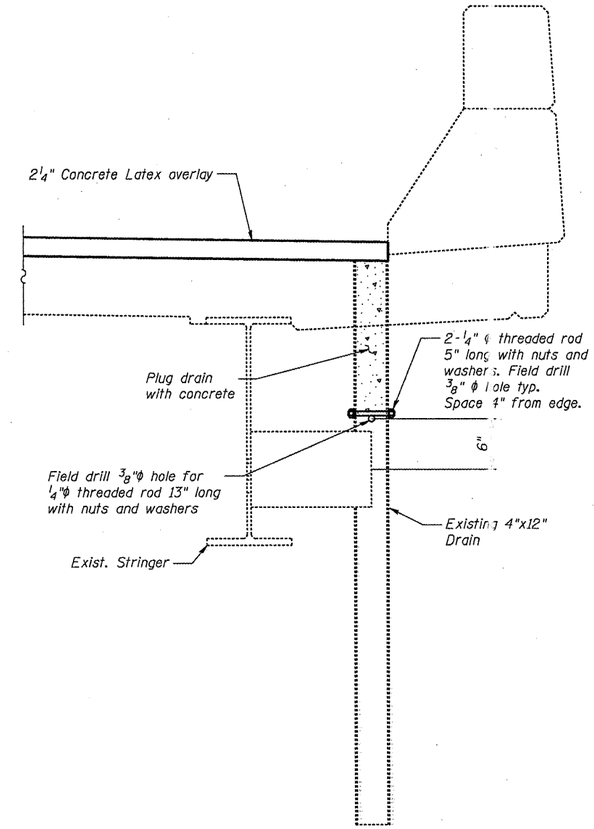

TRUSS DRAIN ELIMINATION DETAIL

Threaded rod, nuts, washers, and concrete shall be paid for as PLUG EXISTING DECK DRAINS.

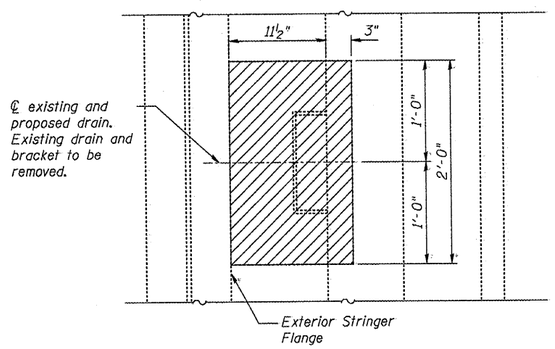

CONCRETE REMOVAL LIMITS

Hatched areas indicate concrete section to be removed and replaced. Perimeters of concrete removal areas shall be saw cut ¾" prior to removal of concrete. Existing reinforcing shall remain.

Notes:

Drains shall be located clear of all diaphragms.

The exterior surfaces of the floor drains shall be painted with the finish coat as specified in the special provisions for Cleaning and Painting New Metal Structures. The exterior surfaces of the drains shall be cleaned according to Steel Structures Painting Council's Spec. SSPC-SP1 prior to painting.

Fiberglass pipe shall conform to ASTM D 2996, with short-time rupture strength hoop tensile stress of 30,000 p.s.i. minimum.

Galvanize clamping device according to AASHTO M232. Cost of clamping device and galvanizing included with Floor Drains.

FILE NAME =	USER NAME =	DESIGNED - BTO	REVISED -	STATE OF ILLINOIS DEPARTMENT OF TRANSPORTATION	TRUSS DECK DRAIN REPAIR DETAILS STRUCTURE NO. 090-0108 & 090-0109	F.A.I. RTE.	SECTION	COUNTY	TOTAL SHEETS	SHEET NO.
		CHECKED - JAN	REVISED -			474		PEORIA & TAZEWELL	189	62
	PLOT SCALE =	DRAWN - BTO	REVISED -					CONTRACT NO. 68069		
	PLOT DATE =	CHECKED - JAN	REVISED -		SHEET NO. 28 OF 65 SHEETS			ILLINOIS FED. AID PROJECT		

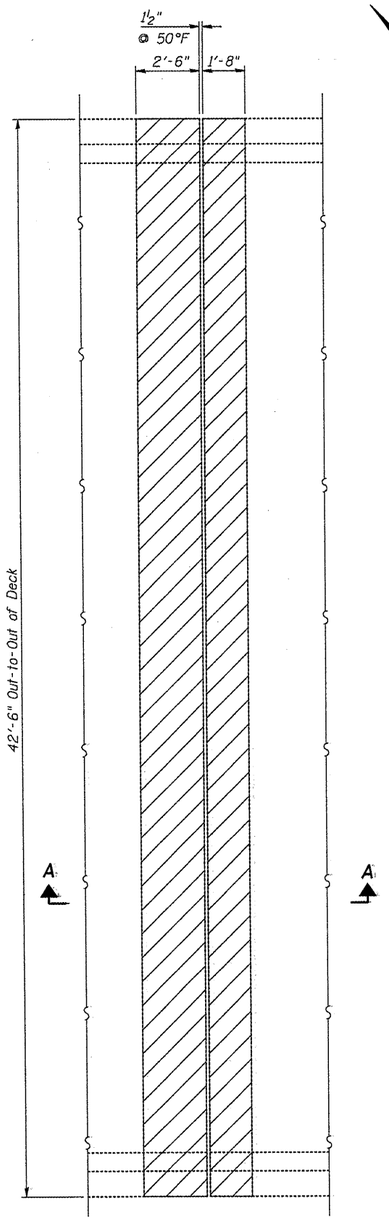

REMOVAL PLAN @ FB4, FB8, FB12'

(FB12, FB19, FB4', FB8' Similar)

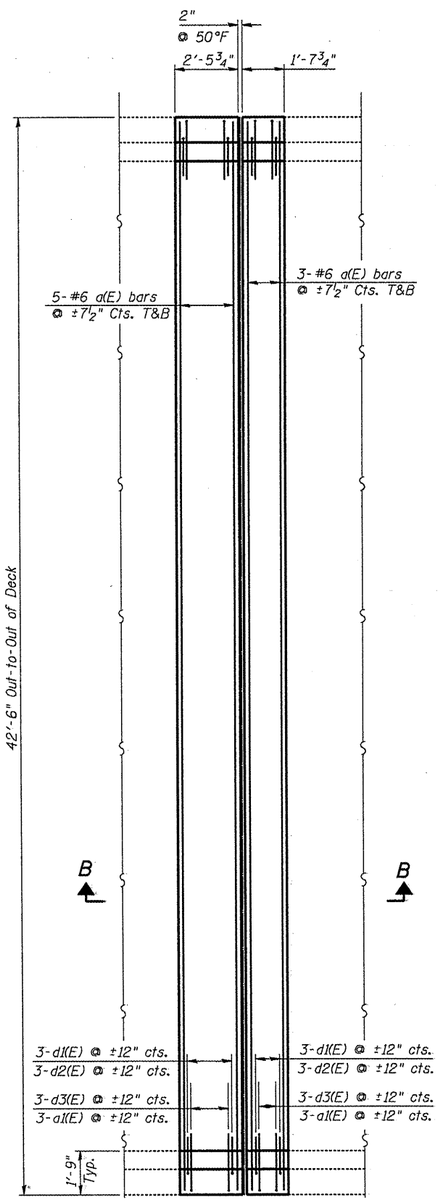

REPAIR PLAN @ FB4, FB8, FB12'

(FB12, FB19, FB4', FB8' Similar)

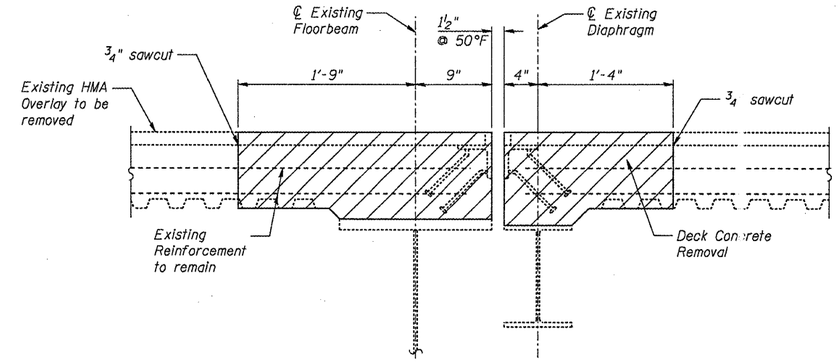

SECTION A-A

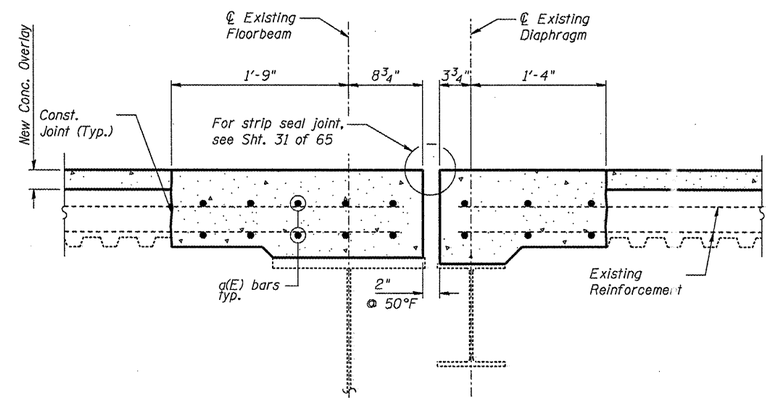

SECTION B-B

Notes:

Existing Reinforcement Bars shown in removal area shall be cleaned and incorporated into new construction. Cost included with CONCRETE REMOVAL.

Hatched areas indicate concrete sections to be removed and replaced. Perimeters of concrete removal areas shall be saw cut ¾" prior to removal.

For cross section of parapet reconstruction, see Sht. 48 of 65.

BILL OF MATERIAL

(for one joint)

Bar	No.	Size	Length	Shape
d(E)	16	#6	41'-0"	
d1(E)	12	#6	4'-0"	
d1(E)	12	#5	5'-2"	
d2(E)	12	#5	3'-7"	
d3(E)	12	#5	2'-1"	
Concrete Removal			Cu. Yd.	5.3
Concrete Superstructure			Cu. Yd.	5.1
Reinforcement Bars, Epoxy Coated			Pound	1,200

FILE NAME =	USER NAME =	DESIGNED - BTO	REVISED -
		CHECKED - JAN	REVISED -
	PLOT SCALE =	DRAWN - RAB	REVISED -
	PLOT DATE =	CHECKED - BTO	REVISED -

STATE OF ILLINOIS
DEPARTMENT OF TRANSPORTATION

RELIEF JOINT REPLACEMENT SPAN 9, 10, & 11
STRUCTURE NO. 090-0108 & 090-0109

SHEET NO. 29 OF 65 SHEETS

F.A.I. RTE.	SECTION	COUNTY	TOTAL SHEETS	SHEET NO.
474		PEORIA & TAZEWELL	129	63
		CONTRACT NO. 68069		
		ILLINOIS FED. AID PROJECT		

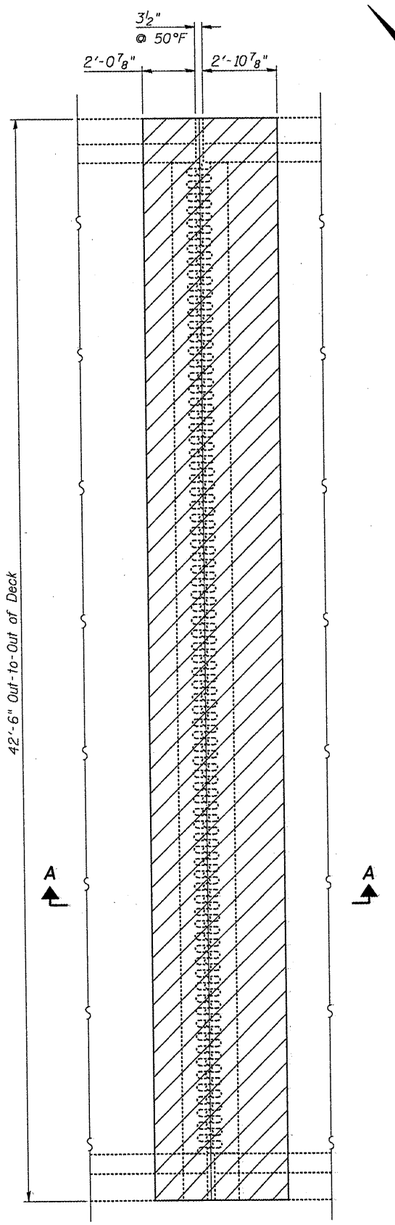

REMOVAL PLAN @ FB15

(FB15' Similar)

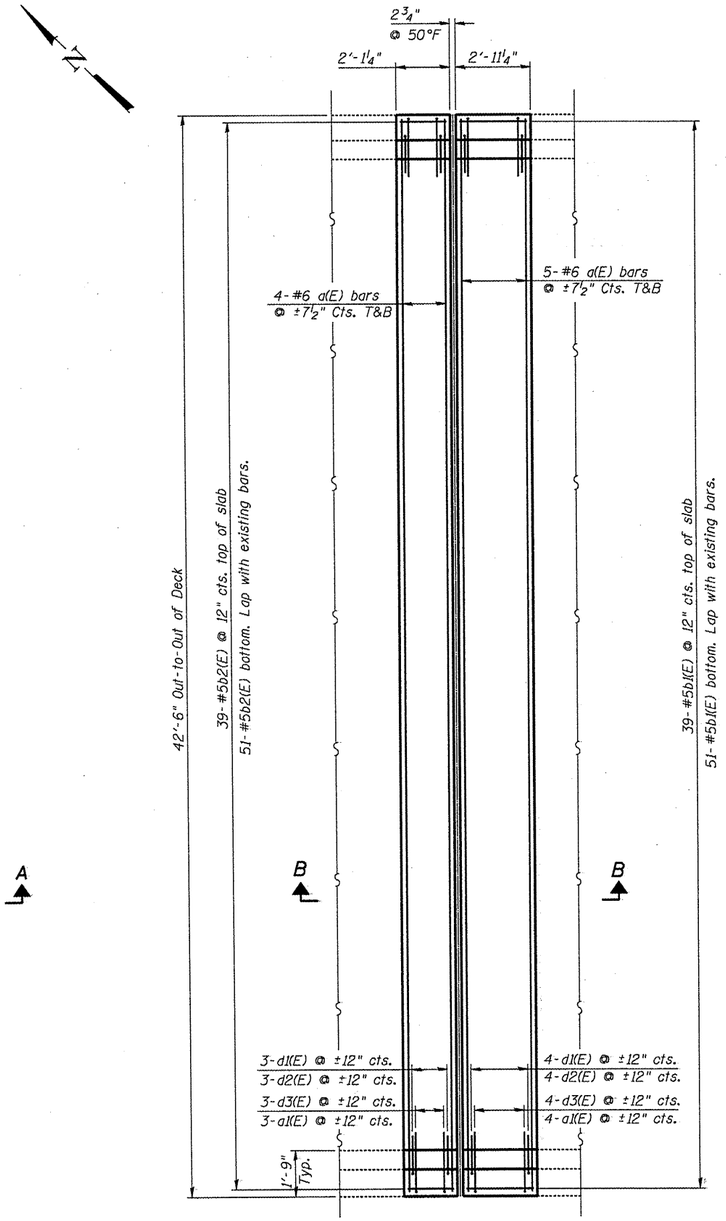

REPAIR PLAN @ FB15

(FB15' Similar)

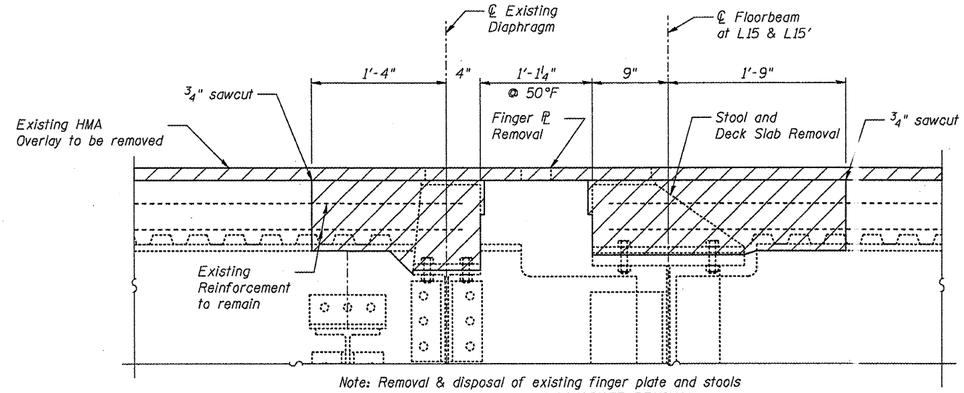

Note: Removal & disposal of existing finger plate and stools is included in the cost of CONCRETE REMOVAL

SECTION A-A

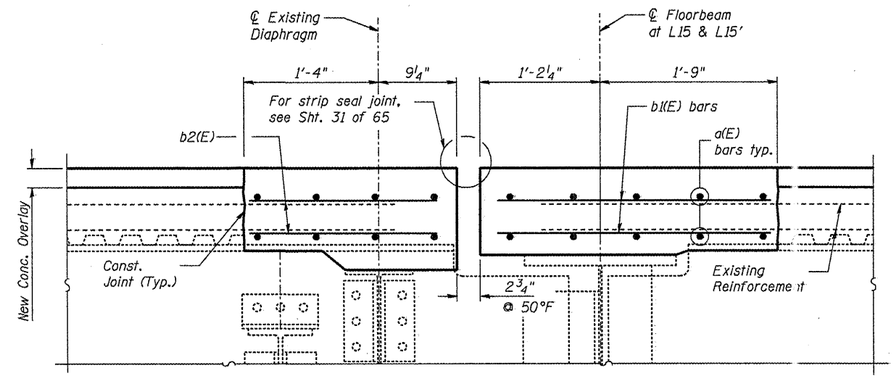

SECTION B-B

BILL OF MATERIAL

(for one joint)

Bar	No.	Size	Length	Shape
a(E)	18	#6	41'-0"	
a1(E)	14	#6	4'-0"	
b1(E)	90	#5	2'-8"	
b2(E)	90	#5	1'-10"	
d1(E)	14	#5	5'-2"	
d2(E)	14	#5	3'-7"	
d3(E)	14	#5	2'-1"	
Concrete Removal			Cu. Yd.	5.0
Concrete Superstructure			Cu. Yd.	7.[illegible]
Reinforcement Bars, Epoxy Coated			Pound	1,760

Notes:

Existing Reinforcement Bars shown in removal area shall be cleaned and incorporated into new construction. Cost included with CONCRETE REMOVAL.

Hatched areas indicate concrete sections to be removed and replaced. Perimeters of concrete removal areas shall be saw cut ¾" prior to removal.

For cross section of parapet reconstruction, see sht. 48 of 65.

FILE NAME =	USER NAME =	DESIGNED - BTO	REVISED -
		CHECKED - JAN	REVISED -
	PLOT SCALE =	DRAWN - RAB	REVISED -
	PLOT DATE =	CHECKED - BTO	REVISED -

STATE OF ILLINOIS
DEPARTMENT OF TRANSPORTATION

FINGER JOINT REPLACEMENT, SPAN 10 FB15 & FB15'
STRUCTURE NO. 090-0108 & 090-0109

SHEET NO. 30 OF 65 SHEETS

F.A.I. RTE.	SECTION	COUNTY	TOTAL SHEETS	SHEET NO.
474		PEORIA & TAZEWELL	129	64
		CONTRACT NO. 68069		
		ILLINOIS FED. AID PROJECT		

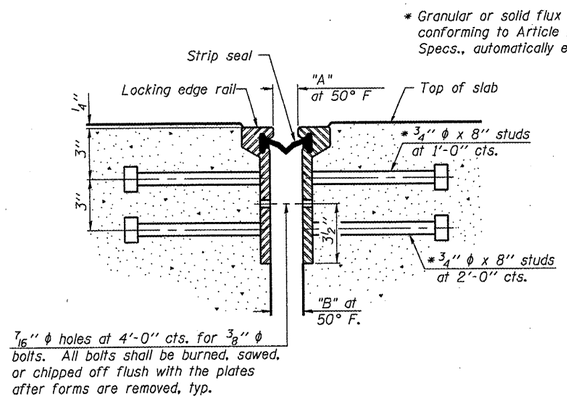

SECTION THRU
ROLLED RAIL JOINT

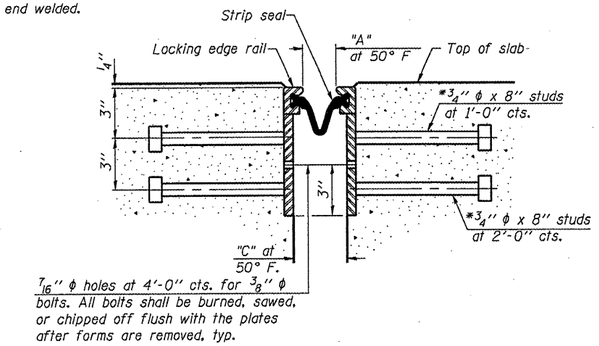

SECTION THRU
WELDED RAIL JOINT

Joint Location	A	B	C
FB15 & FB15'	2 1/4"	2 3/4"	3 1/2"
FB4, FB8, FB12, FB19, FB12', FB8', FB4'	1 1/2"	2"	2 3/4"

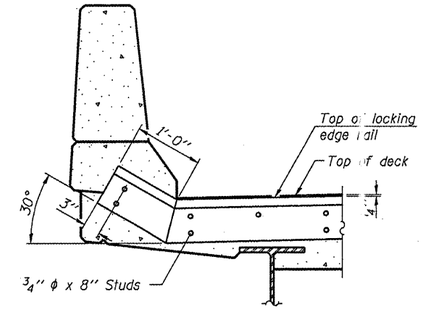

AT PARAPET
See Section A-A for end treatment of skews > 30°.

TYPICAL END TREATMENTS

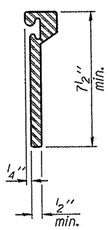

ROLLED
EXTRUDED RAIL

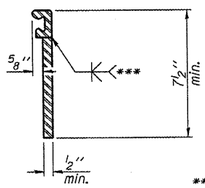

WELDED RAIL

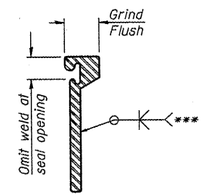

*** Back gouge not required if complete joint penetration is verified by mock-up.

LOCKING EDGE
RAIL SPLICE

The inside of the locking edge rail groove shall be free of weld residue.

Rolled rail shown, welded rail similar.

LOCKING EDGE RAILS

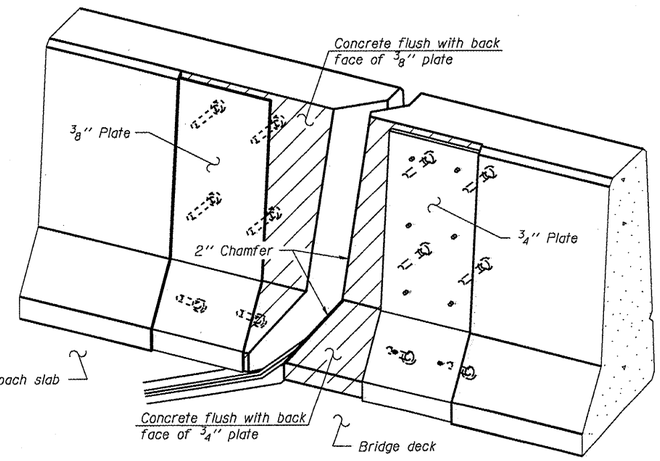

TRIMETRIC VIEW
(Showing back plates only)

Notes:

The strip seal shall be made continuous and shall have a minimum thickness of 1/4". The configuration of the strip seal shall match the configuration of the Locking Edge Rails. Open or "webbed" strip seal gland configurations are not permitted. The gland shall be sized for a maximum rated movement of 4 inches.

The Locking Edge Rails depicted are conceptual only, except for the minimum dimensions shown. The actual configuration of the Locking Edge Rails and matching strip seal may vary from manufacturer to manufacturer. Flanged edge rails will not be allowed. Locking Edge Rails may be spliced at slope discontinuities.

The manufacturer's recommended installation methods shall be followed.

The joint opening and deck dimensions detailed on the superstructure are based on a rolled rail expansion joint. If the Contractor elects to use the welded rail expansion joint, the opening and deck dimensions shall be modified according to the dimensions detailed on this sheet. Required modifications shall be made at no additional cost to the State.

All steel components shall be galvanized after fabrication according to Article 520.03 of the Standard Specifications.

Maximum space between rail segments at stage lines shall be 3/16", sealed with a suitable sealant.

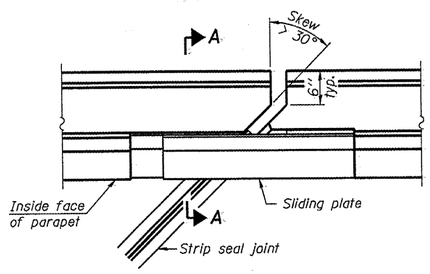

PLAN

POINT BLOCK DETAILS
(for skews > 30°)

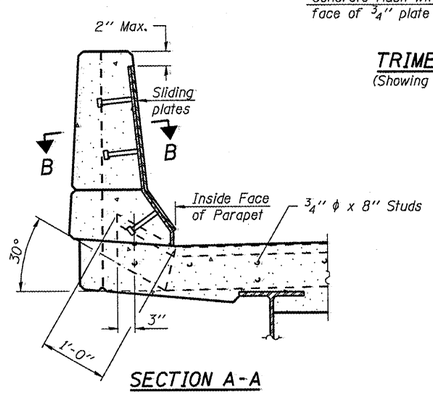

SECTION A-A

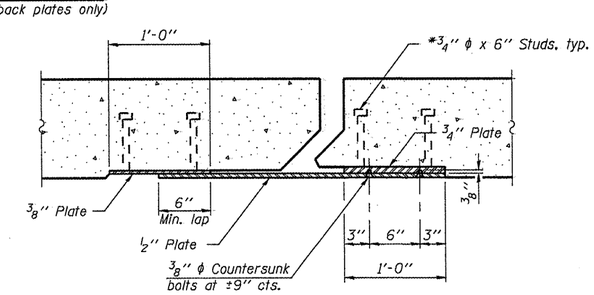

SECTION B-B

BILL OF MATERIAL

Item	Unit	Total
Preformed Joint Strip Seal	Foot	738

FILE NAME =	USER NAME =	DESIGNED - BTO	REVISED -	STATE OF ILLINOIS DEPARTMENT OF TRANSPORTATION	PREFORMED JOINT STRIP SEAL DETAILS STRUCTURE NO. 090-0108 & 090-0109	F.A.I. RTE. 474	SECTION	COUNTY PEORIA & TAZEWELL	TOTAL SHEETS 129	SHEET NO. 65
		CHECKED - JAN	REVISED -					CONTRACT NO. 68069		
	PLOT SCALE =	DRAWN - BTO	REVISED -					ILLINOIS FED. AID PROJECT		
	PLOT DATE =	CHECKED - JAN	REVISED -		SHEET NO. 31 OF 65 SHEETS					

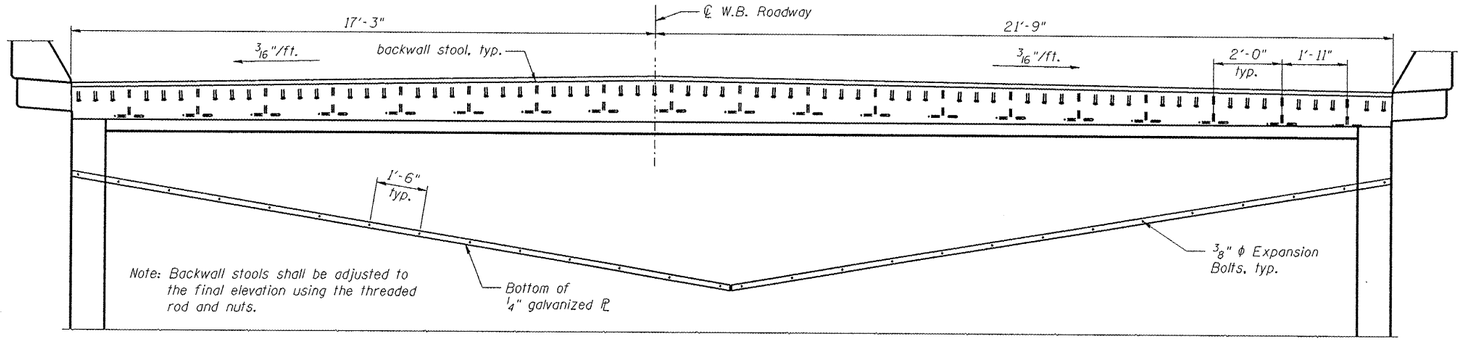

SECTION B-B

(Looking West)

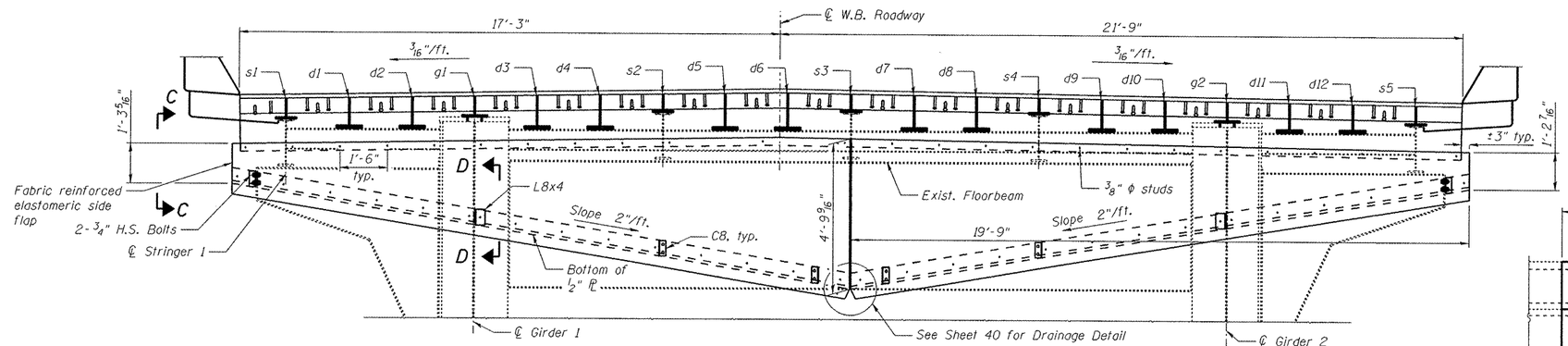

SECTION A-A

(Looking West)

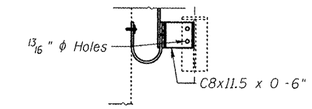

VIEW C-C

Similar view at North end.

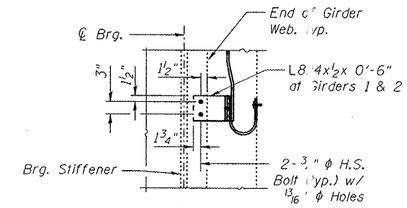

SECTION D-D

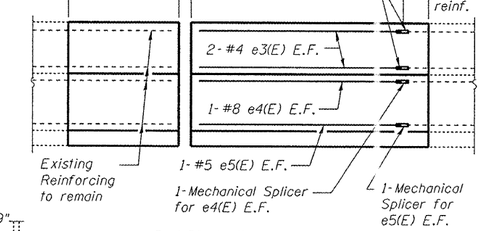

INSIDE ELEVATION OF PARAPET

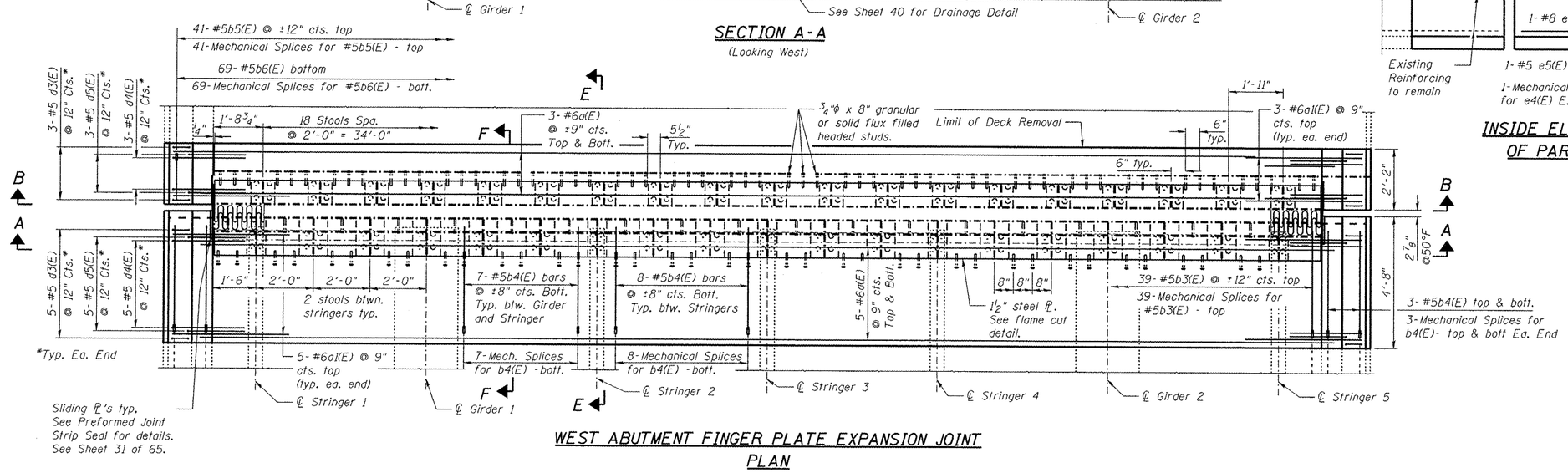

WEST ABUTMENT FINGER PLATE EXPANSION JOINT PLAN

FILE NAME =	USER NAME =	DESIGNED - BTO	REVISED -	STATE OF ILLINOIS DEPARTMENT OF TRANSPORTATION	WEST ABUTMENT FINGER PLATE EXPANSION JOINT, WB STRUCTURE NO. 090-0109	F.A.I. RTE.	SECTION	COUNTY	TOTAL SHEETS	SHEET NO.
		CHECKED - JAN	REVISED -			474		PEORIA & TAZEWELL	129	66
	PLOT SCALE =	DRAWN - BTO	REVISED -					CONTRACT NO. 68069		
	PLOT DATE =	CHECKED - JAN	REVISED -		SHEET NO. 32 OF 65 SHEETS			ILLINOIS FED. AID PROJECT		

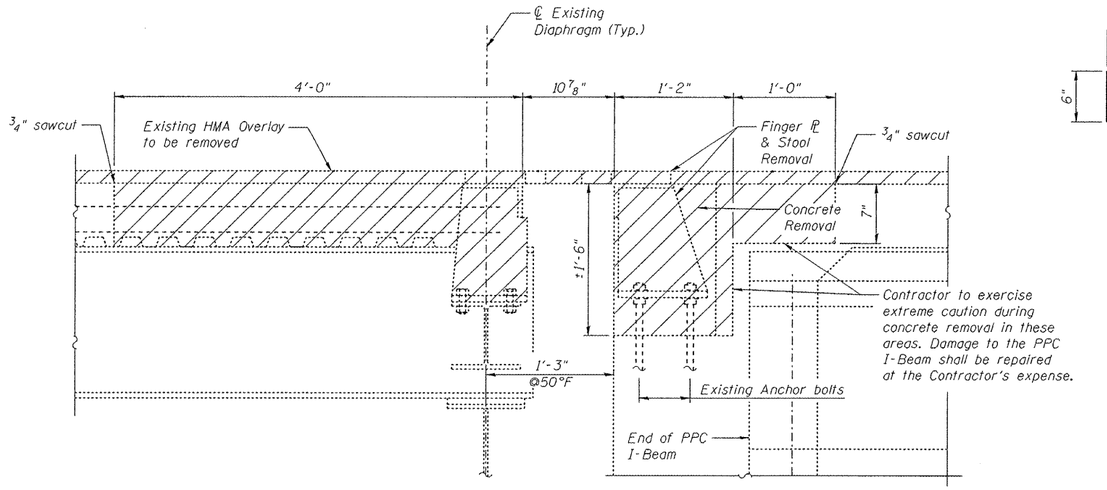

REMOVAL SECTION

Cost of removal and disposal of existing Finger Plate Expansion Joint is included in the cost of CONCRETE REMOVAL.

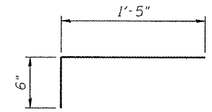

BAR b5(E)

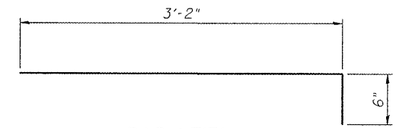

BAR b3(E)

Notes:
See Sht. 39 of 65 for parapet cross section and parapet bar details.

Existing Reinforcement Bars to remain in removal area shall be cleaned and incorporated into new construction. Cost included with CONCRETE REMOVAL.

BILL OF MATERIAL

Bar	No.	Size	Length	Shape
a(E)	16	#6	41'-0"	
a1(E)	16	#6	4'-0"	
b3(E)	39	#5	3'-8"	
b4(E)	64	#5	3'-2"	
b5(E)	41	#5	1'-11"	
b6(E)	69	#5	1'-5"	
d3(E)	16	#5	2'-1"	
d4(E)	16	#5	5'-2"	
d5(E)	16	#5	3'-7"	
e3(E)	8	#4	3'-11"	
e4(E)	4	#8	3'-11"	
e5(E)	4	#5	3'-11"	
Concrete Removal			Cu. Yd.	3.4
Concrete Superstructure			Cu. Yd.	0.7
Reinforcement Bars, Epoxy Coated			Pound	1890
Mechanical Splicers			Each	221
Finger Plate Expansion Joint, 3"			Foot	19.0
Fabric Reinforced Elastomeric Trough			Foot	19.5

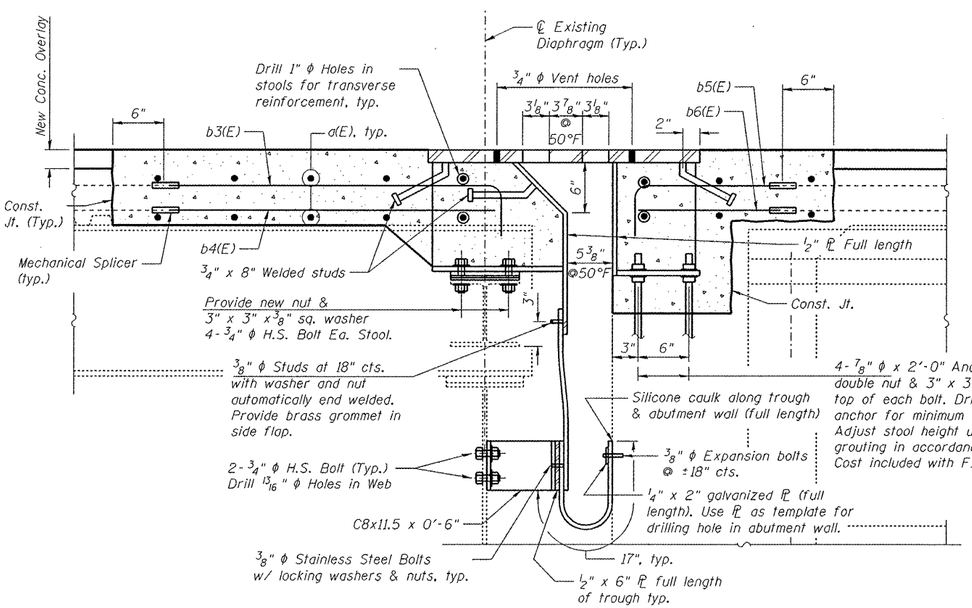

SECTION F-F

Note:
Provide one 1/2", one 1/4", one 1/8", and one 1/16" shim for height adjustment under all stools, typ.

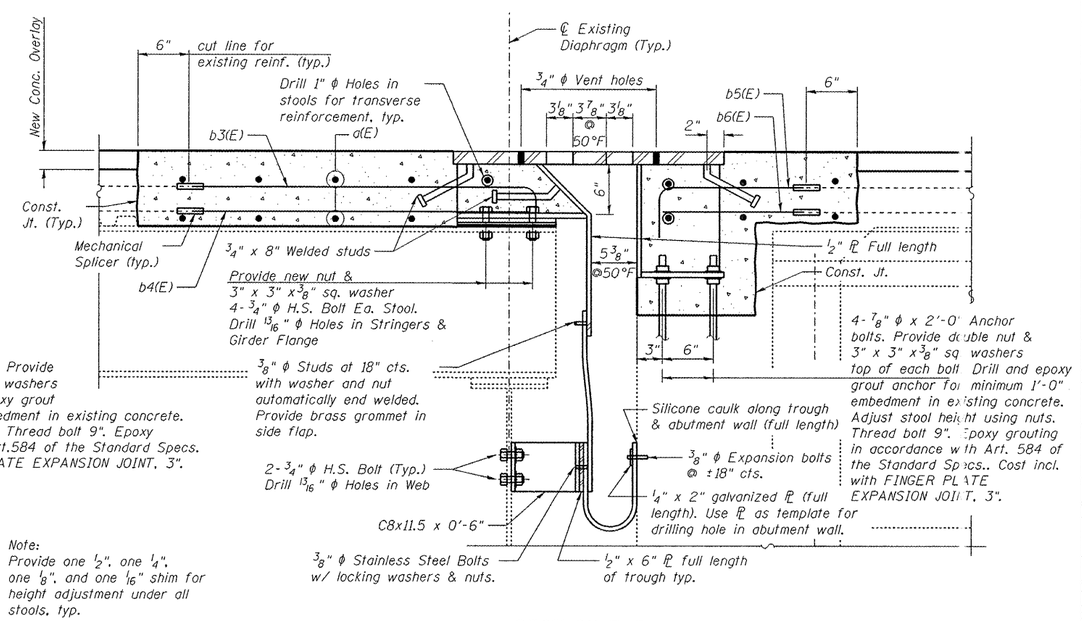

SECTION E-E

FILE NAME =	USER NAME =	DESIGNED - BTO	REVISED -
		CHECKED - JAN	REVISED -
	PLOT SCALE =	DRAWN - BTO	REVISED -
	PLOT DATE =	CHECKED - JAN	REVISED -

STATE OF ILLINOIS
DEPARTMENT OF TRANSPORTATION

WEST ABUTMENT FINGER PLATE TROUGH DETAILS, WB
STRUCTURE NO. 090-0109

SHEET NO. 33 OF 65 SHEETS

F.A.I. RTE.	SECTION	COUNTY	TOTAL SHEETS	SHEET NO.
474		PEORIA & TAZEWELL	129	67
		CONTRACT NO. 68069		
		ILLINOIS FED. AID PROJECT		

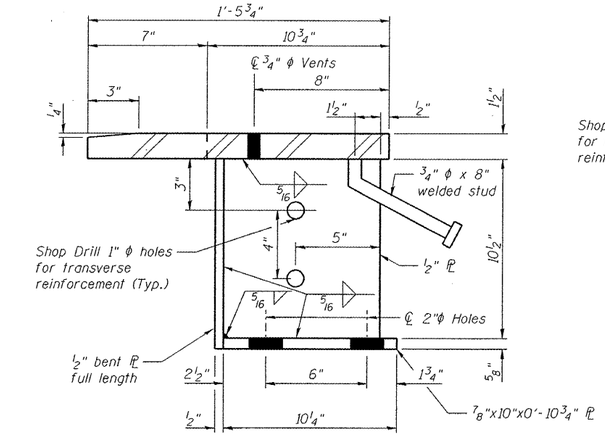

BACKWALL STOOL DETAIL

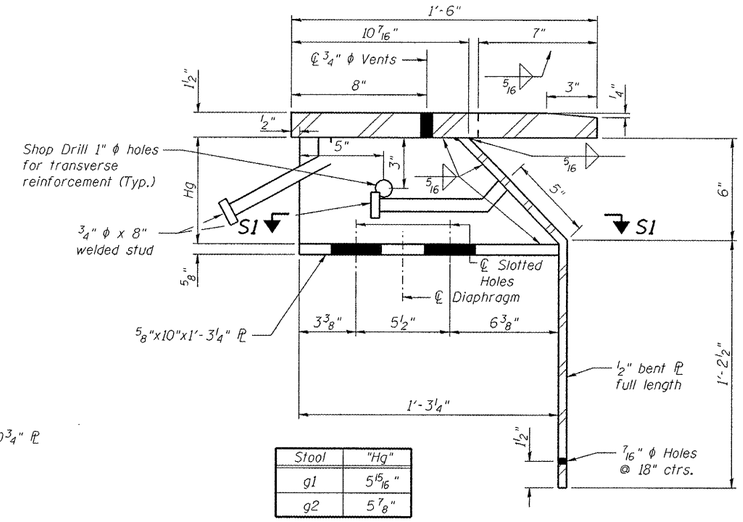

Stool	"Hg"
g1	5 15/16"
g2	5 7/8"

STOOL "g" DETAIL

(Located on Girders)

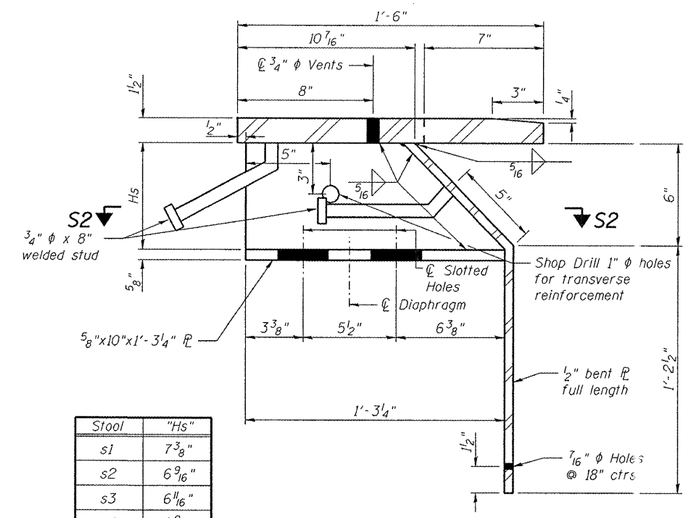

Stool	"Hs"
s1	7 3/8"
s2	6 9/16"
s3	6 11/16"
s4	6 9/16"
s5	5 3/4"

STOOL "s" DETAIL

(Located on Stringers)

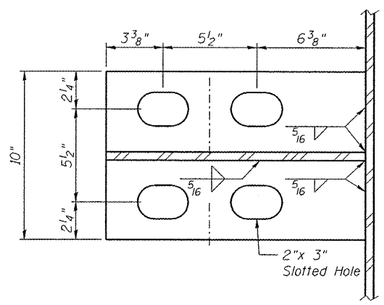

SECTION S1-S1

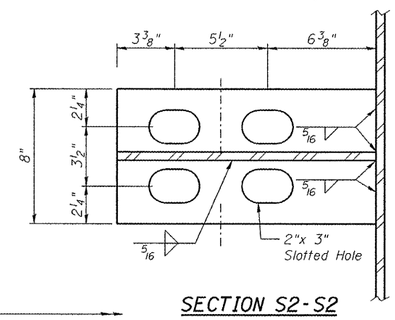

SECTION S2-S2

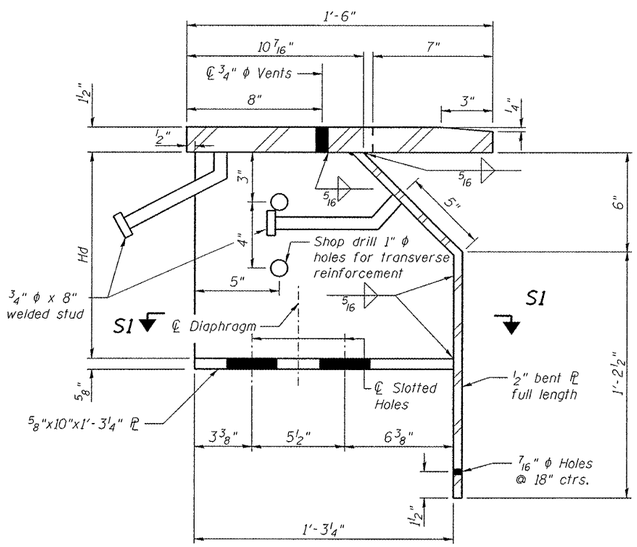

STOOL "d" DETAIL

(Located on Diaphragm)

Stool	"Hd"
d1	11"
d2	11 3/8"
d3	12 1/8"
d4	12 1/2"
d5	13 1/4"
d6	13 1/2"
d7	12 3/4"
d8	12 3/8"
d9	11 5/8"
d10	11 1/4"
d11	10 1/2"
d12	10 1/8"

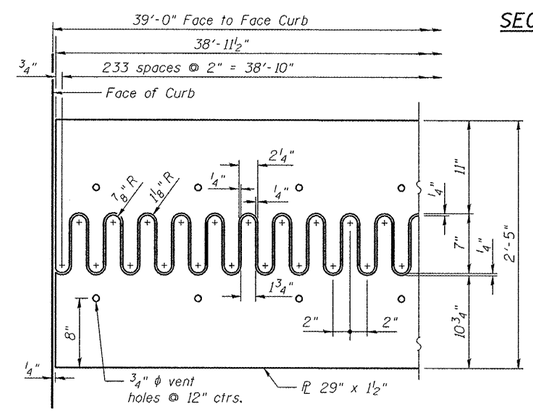

FLAME CUT PLATE DETAIL

Note:
Finger Plates, bent plates, side plates, shim plates, & stools shall be AASHTO M270 Grade 50.

FILE NAME =	USER NAME =	DESIGNED - BTO	REVISED -	STATE OF ILLINOIS DEPARTMENT OF TRANSPORTATION
		CHECKED - JAN	REVISED -	
	PLOT SCALE =	DRAWN - BTO	REVISED -	
	PLOT DATE =	CHECKED - JAN	REVISED -	

WEST ABUTMENT FINGER PLATE & STOOL DETAILS, WB
STRUCTURE NO. 090-0109

SHEET NO. 34 OF 65 SHEETS

F.A.I. RTE.	SECTION	COUNTY	TOTAL SHEETS	SHEET NO.
474		PEORIA & TAZEWELL	129	68
		CONTRACT NO. 68069		
		ILLINOIS FED. AID PROJECT		

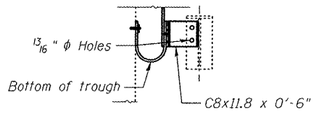

VIEW C-C

Similar view at North end.

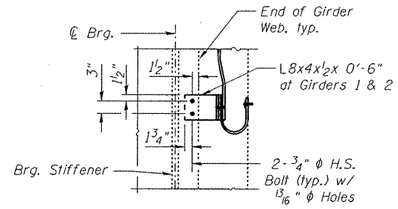

SECTION B-B

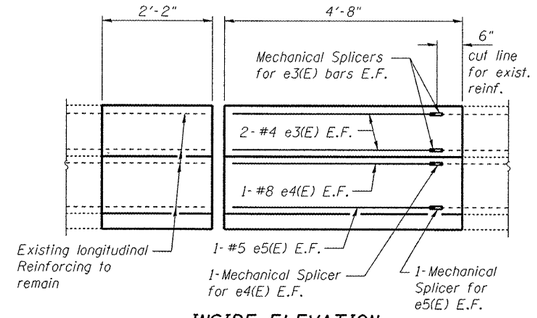

INSIDE ELEVATION OF PARAPET

FINGER PLATE TROUGH INSTALLATION PROCEDURE

1) Perimeter of concrete removal area shall be saw cut ¾" prior to removal.

2) Remove Concrete Deck and parapet as shown. During concrete removal, care shall be taken to avoid damage to the existing finger ℙ, studs, stools, diaphragms, and stringers. Any part of the Finger ℙ assembly damaged during removal shall be replaced at the Contractor's expense to the satisfaction of the Engineer.

3) After the concrete deck is removed, the finger ℙ and stools shall be removed in one piece and cleaned.

4) Clean and prep the existing angle edge and stool web. Weld new ½" trough ℙ per detail.

5) Prior to re-installation of the finger plate assembly, the Girder bearings shall be removed and replaced.

6) Install trough support channels and angles to match the slope shown.

7) Reinstall Finger ℙ assembly with new shims and bolts. Adjust stools to account for any temperature variation from 50°F.

8) Install trough to match slope shown. Install trough drainage system.

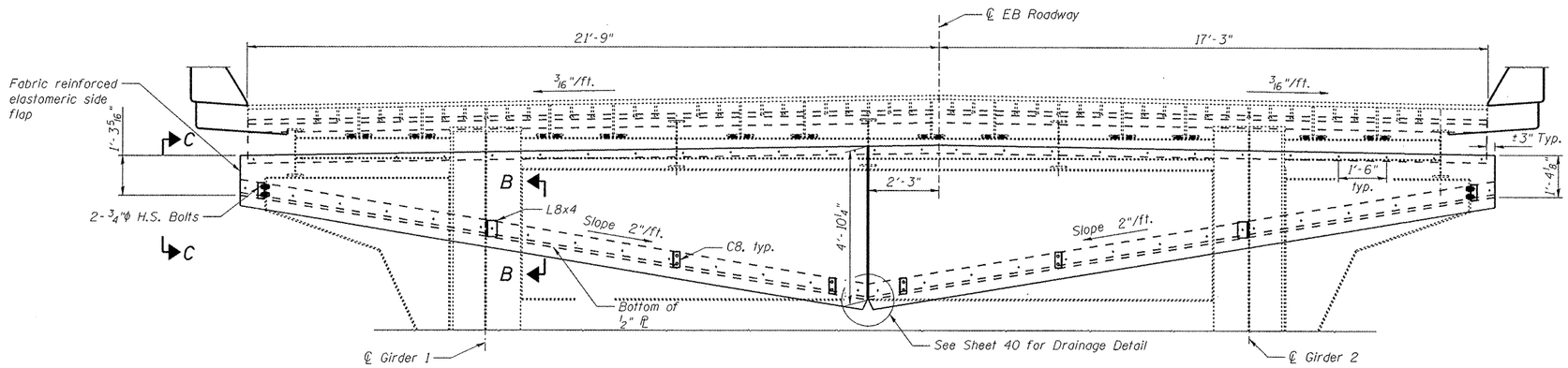

SECTION A-A

(Looking West)

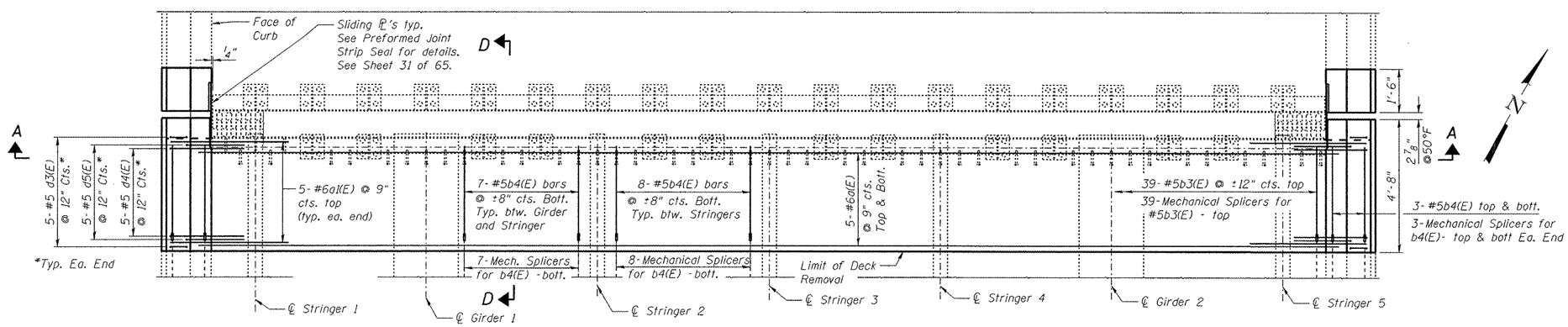

WEST ABUTMENT FINGER PLATE EXPANSION JOINT

PLAN

FILE NAME =	USER NAME =	DESIGNED - BTO	REVISED -	STATE OF ILLINOIS DEPARTMENT OF TRANSPORTATION	WEST ABUTMENT FINGER PLATE TROUGH, EB STRUCTURE NO. 090-0108	F.A.I. RTE.	SECTION	COUNTY	TOTAL SHEETS / SHEET NO.
		CHECKED - JAN	REVISED -			474		PEORIA & TAZEWELL	129 / 69
	PLOT SCALE =	DRAWN - BTO	REVISED -					CONTRACT NO. 68069	
	PLOT DATE =	CHECKED - JAN	REVISED -		SHEET NO. 35 OF 65 SHEETS			ILLINOIS FED. AID PROJECT	

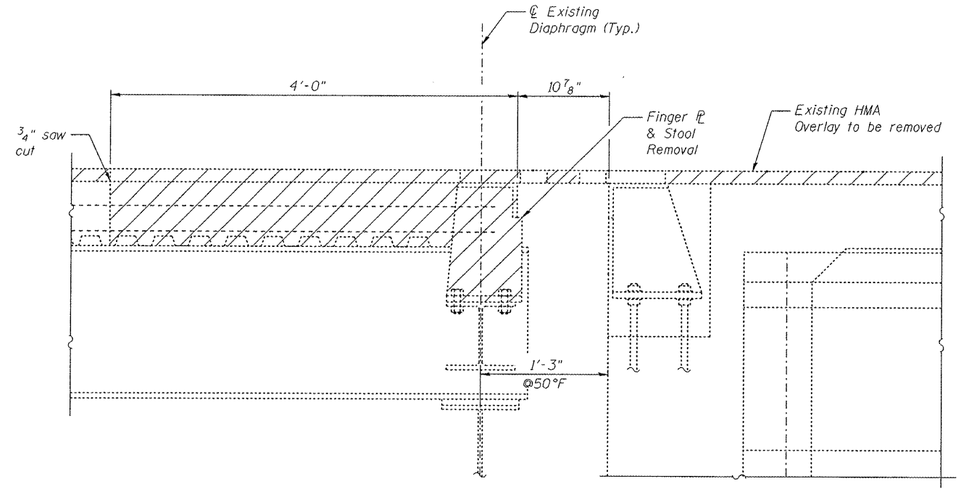

REMOVAL SECTION

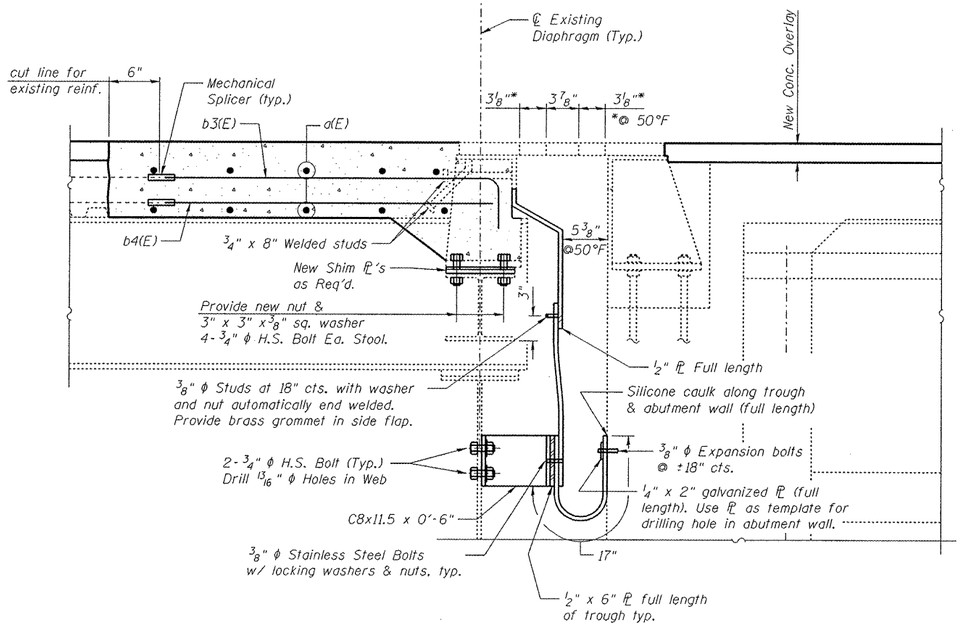

SECTION D-D

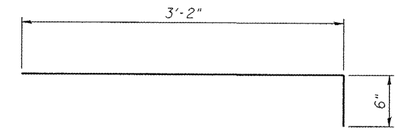

BAR b3(E)

Notes:
See Sht. 39 of 65 for parapet cross section and parapet bar details.

Existing Reinforcement Bars to remain in removal area shall be cleaned and incorporated into new construction. Cost included with CONCRETE REMOVAL.

BILL OF MATERIAL

Bar	No.	Size	Length	Shape
a(E)	10	#6	41'-0"	
a1(E)	10	#6	4'-0"	
b3(E)	39	#5	3'-8"	
b4(E)	64	#5	3'-2"	
d3(E)	10	#5	2'-1"	
d4(E)	10	#5	5'-2"	
d5(E)	10	#5	3'-7"	
e3(E)	8	#4	3'-11"	
e4(E)	4	#8	3'-11"	
e5(E)	4	#5	3'-11"	
Concrete Removal			Cu. Yd.	[illegible].6
Concrete Superstructure			Cu. Yd.	[illegible].7
Reinforcement Bars, Epoxy Coated			Pound	1,[illegible]30
Mechanical Splicers			Each	[illegible]9
Fabric Reinforced Elastomeric Trough**			Foot	3[illegible].5
Remove and Reinstall Finger Plate Joint			Each	1

**All structural steel for connections, trough plates & shims, sliding plates, welding and studs and all high strength bolts shall be covered in this cost, which shall included all materials, equipment, labor, and installation.

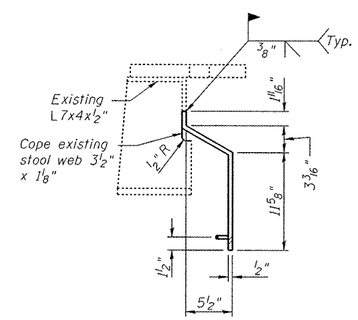

TROUGH ℙ DETAIL

FILE NAME =	USER NAME =	DESIGNED - BTO	REVISED -
		CHECKED - JAN	REVISED -
	PLOT SCALE =	DRAWN - BTO	REVISED -
	PLOT DATE =	CHECKED - JAN	REVISED -

STATE OF ILLINOIS
DEPARTMENT OF TRANSPORTATION

WEST ABUTMENT FINGER PLATE TROUGH DETAILS, EB
STRUCTURE NO. 090-0108

SHEET NO. 36 OF 65 SHEETS

F.A.I. RTE.	SECTION	COUNTY	TOTAL SHEETS	SHEET NO.
474		PEORIA & TAZEWELL	119	70
		CONTRACT NO. 68069		
		ILLINOIS FED. AID PROJECT		

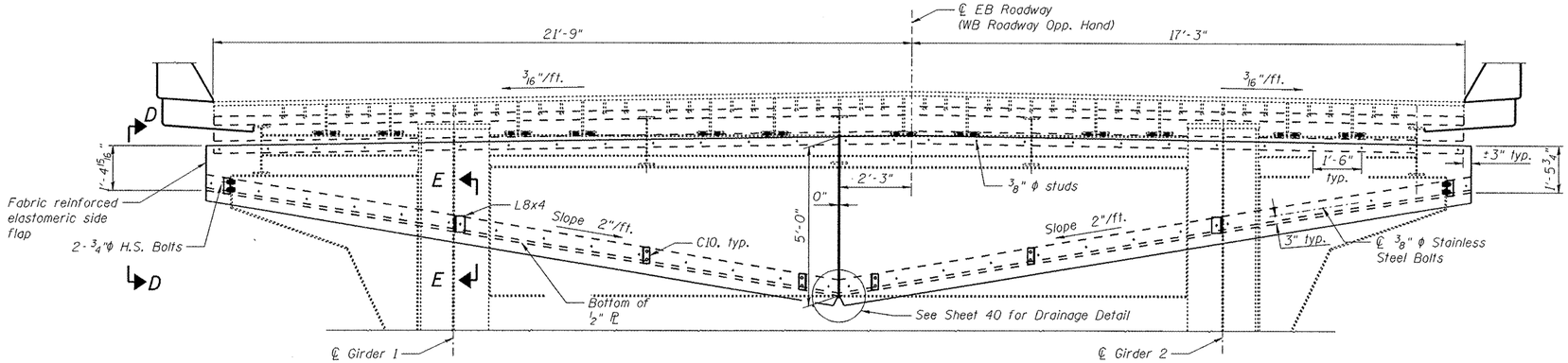

SECTION B-B

(Looking West)

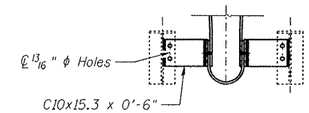

VIEW D-D

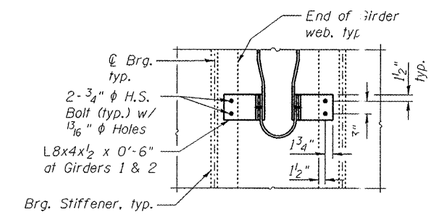

SECTION E-E

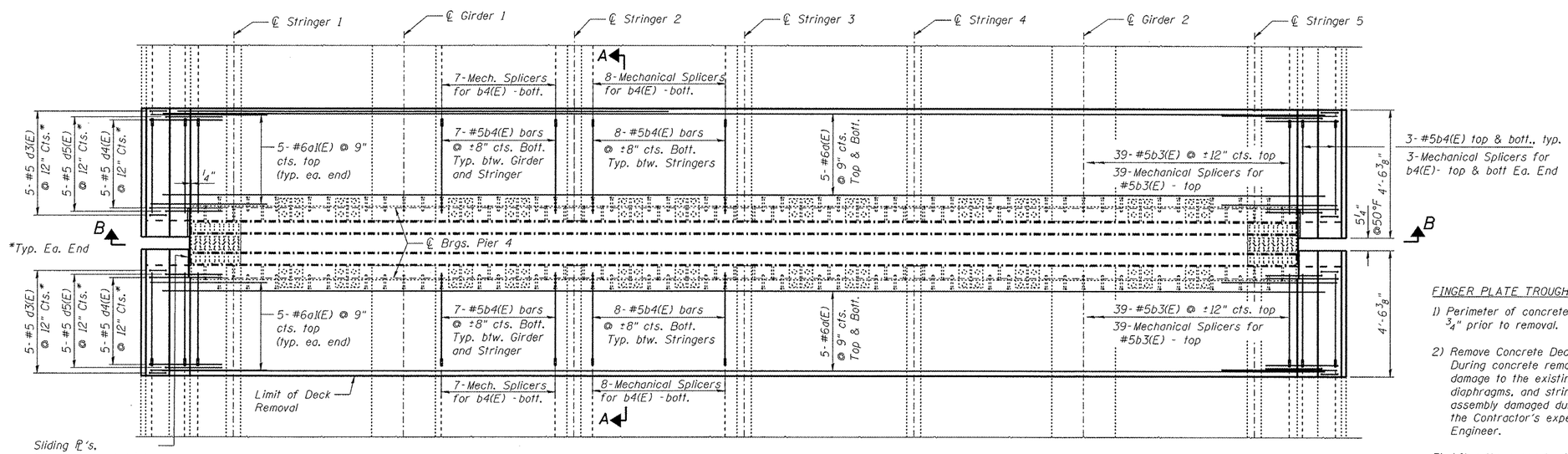

PIER 4 FINGER PLATE EXPANSION JOINT PLAN

(Eastbound bridge shown. Westbound similar)

N

FINGER PLATE TROUGH INSTALLATION PROCEDURE

1) Perimeter of concrete removal area shall be saw cut 3/4" prior to removal.

2) Remove Concrete Deck and parapet as shown. During concrete removal, care shall be taken to avoid damage to the existing finger ℄, studs, stools, diaphragms, and stringers. Any part of the Finger ℄ assembly damaged during removal shall be replaced at the Contractor's expense to the satisfaction of the Engineer.

3) After the concrete deck is removed, the finger ℄ and stools shall be removed in one piece and cleaned.

4) Clean and prep the existing angle edge and stool web. Weld new 1/2" trough ℄ per detail.

5) Install trough support channels and angles to match the slope shown.

6) Reinstall Finger ℄ assembly with new studs and bolts. Adjust stools to account for any temperature variation from 50°F.

7) Install trough to match slope shown.

FILE NAME =	USER NAME =	DESIGNED - BTO	REVISED -	STATE OF ILLINOIS DEPARTMENT OF TRANSPORTATION	PIER 4 FINGER PLATE TROUGH STRUCTURE NO. 090-0108 & 090-0109	F.A.I. RTE.	SECTION	COUNTY	TOTAL SHEETS / SHEET NO.
		CHECKED - JAN	REVISED -			474		PEORIA & TAZEWELL	129 / 61
	PLOT SCALE =	DRAWN - BTO	REVISED -					CONTRACT NO. 68069	
	PLOT DATE =	CHECKED - JAN	REVISED -		SHEET NO. 37 OF 65 SHEETS			ILLINOIS FED. AID PROJECT	

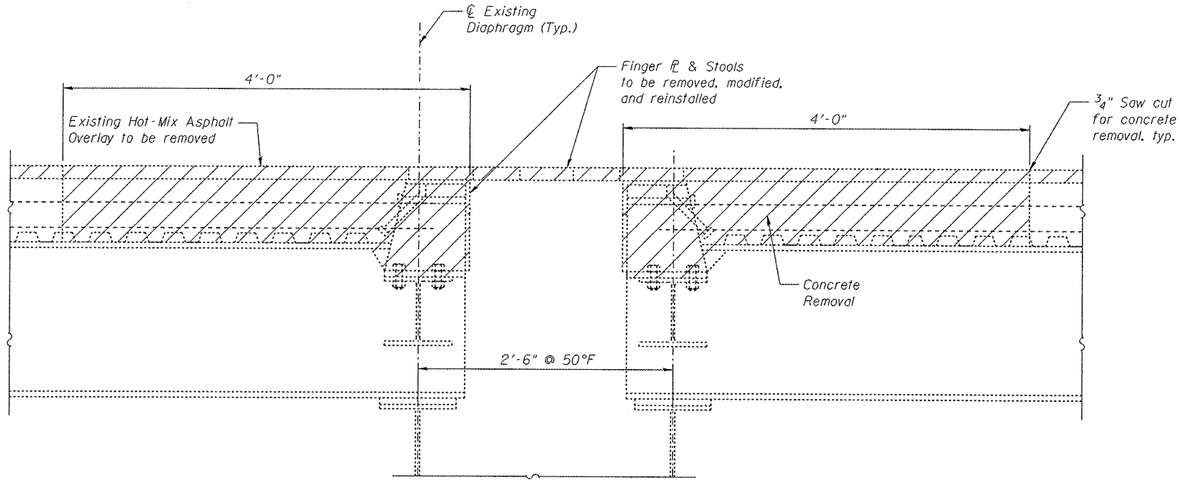

REMOVAL SECTION

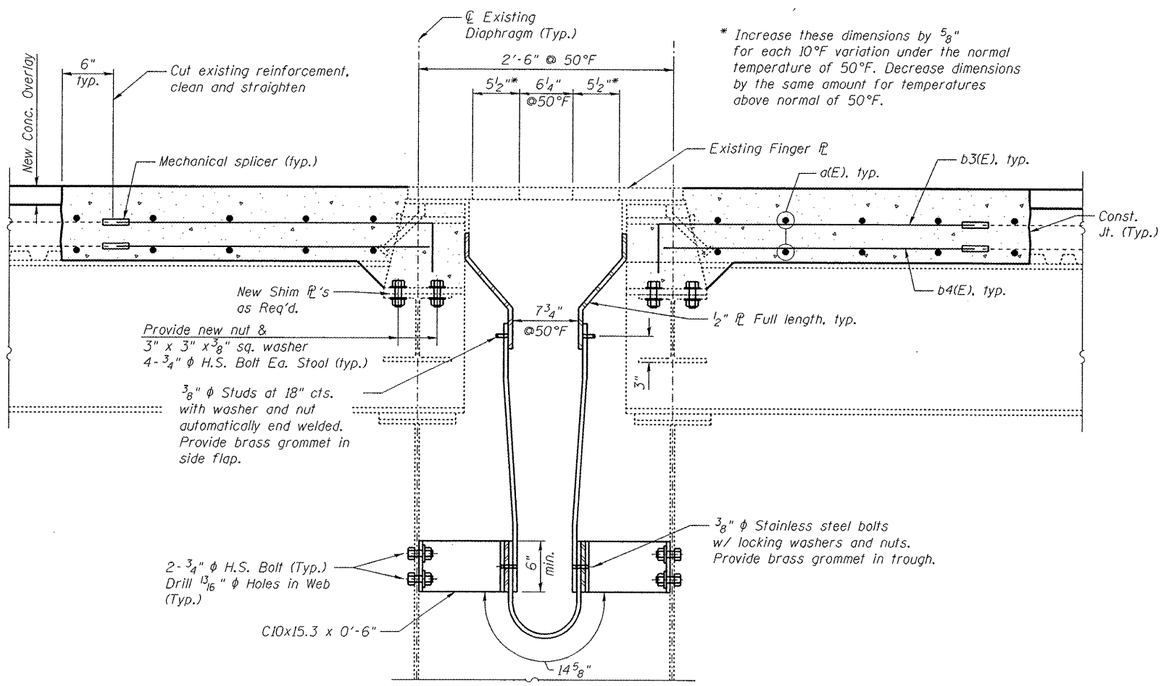

SECTION A-A

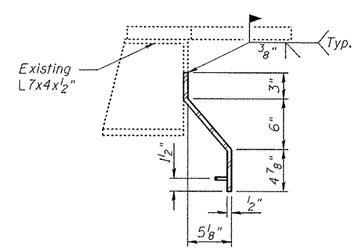

TROUGH ℄ DETAIL

FILE NAME =	USER NAME =	DESIGNED - BTO	REVISED -
		CHECKED - JAN	REVISED -
	PLOT SCALE =	DRAWN - BTO	REVISED -
	PLOT DATE =	CHECKED - JAN	REVISED -

STATE OF ILLINOIS
DEPARTMENT OF TRANSPORTATION

PIER 4 FINGER PLATE TROUGH DETAILS
STRUCTURE NO. 090-0108 & 090-0109

SHEET NO. 38 OF 65 SHEETS

F.A.I. RTE.	SECTION	COUNTY	TOTAL SHEETS	SHEET NO.
474		PEORIA & TAZEWELL	189	72
		CONTRACT NO. 68069		
		ILLINOIS FED. AID PROJECT		

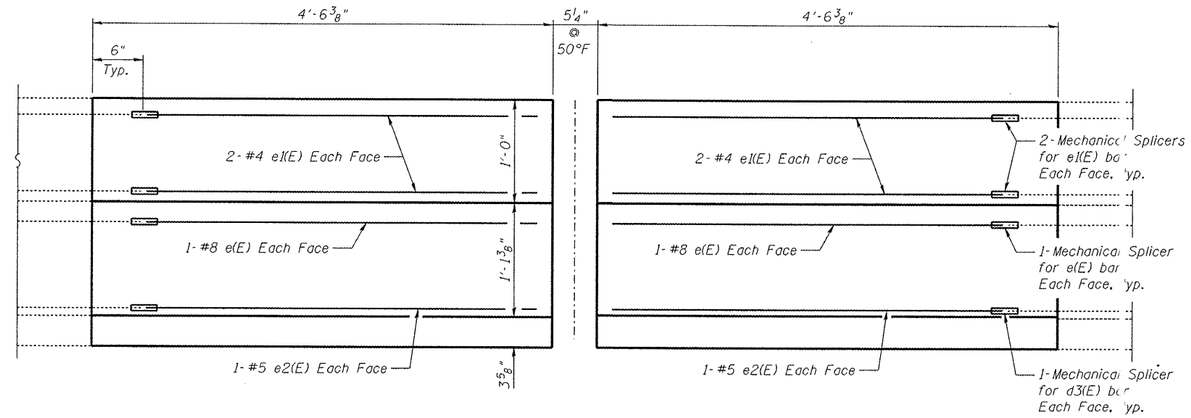

INSIDE ELEVATION OF PARAPET

Note:
For railpost treatment at concrete removal locations, see sheet 48.

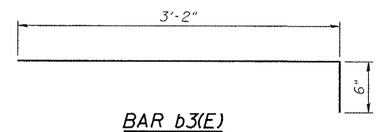

BAR b3(E)

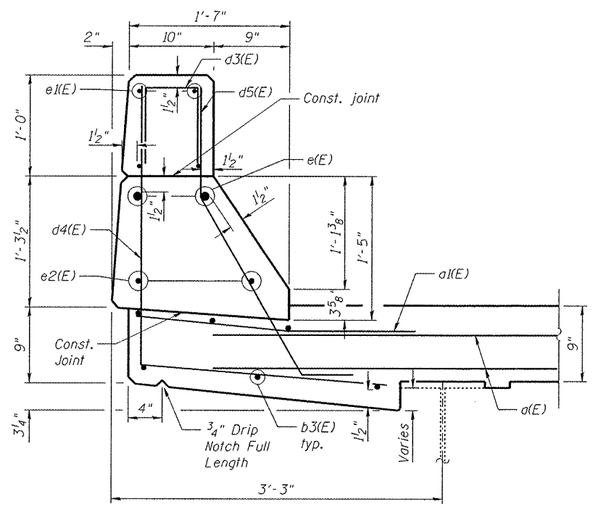

APPROACH SPANS PARAPET RECONSTRUCTION DETAIL

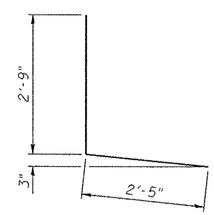

BAR d4(E)

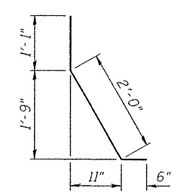

BAR d5(E)

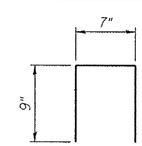

BAR d3(E)

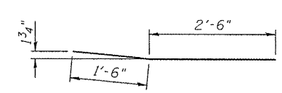

BAR a1(E)

BILL OF MATERIAL

(for 1 Location)

Bar	No.	Size	Length	Shape
d(E)	20	#6	41'-0"	
a1(E)	20	#6	4'-0"	
b3(E)	78	#5	3'-8"	
b4(E)	128	#5	3'-2"	
d3(E)	20	#5	2'-1"	
d4(E)	20	#5	5'-2"	
d5(E)	20	#5	3'-7"	
e(E)	8	#8	3'-9"	
e1(E)	16	#4	3'-9"	
e2(E)	8	#5	3'-9"	
Concrete Removal			Cu. Yd.	3.1
Concrete Superstructure			Cu. Yd.	1.7
Reinforcement Bars, Epoxy Coated			Pound	2 450
Mechanical Splicers			Each	98
Fabric Reinforced Elastomeric Trough*			Foot	39.5
Remove and Reinstall Finger Plate Joint			Each	1

*All structural steel for connections, trough plates & shims, sliding plates, welding and studs and all high strength bolts shall be covered in this cost, which shall included all materials, equipment, labor, and installation.

FILE NAME =	USER NAME =	DESIGNED - RAB	REVISED -
		CHECKED - BTO	REVISED -
	PLOT SCALE =	DRAWN - RAB	REVISED -
	PLOT DATE =	CHECKED - BTO	REVISED -

STATE OF ILLINOIS
DEPARTMENT OF TRANSPORTATION

PIER 4 BILL OF MATERIAL AND APPROACH PARAPET DETAIL
STRUCTURE NO. 090-0108 & 090-0109

SHEET NO. 39 OF 65 SHEETS

F.A.I. RTE.	SECTION	COUNTY	TOTAL SHEETS	SHEET NO.
474		PEORIA & TAZEWELL	129	73
		CONTRACT NO. 68069		
		ILLINOIS FED. AID PROJECT		

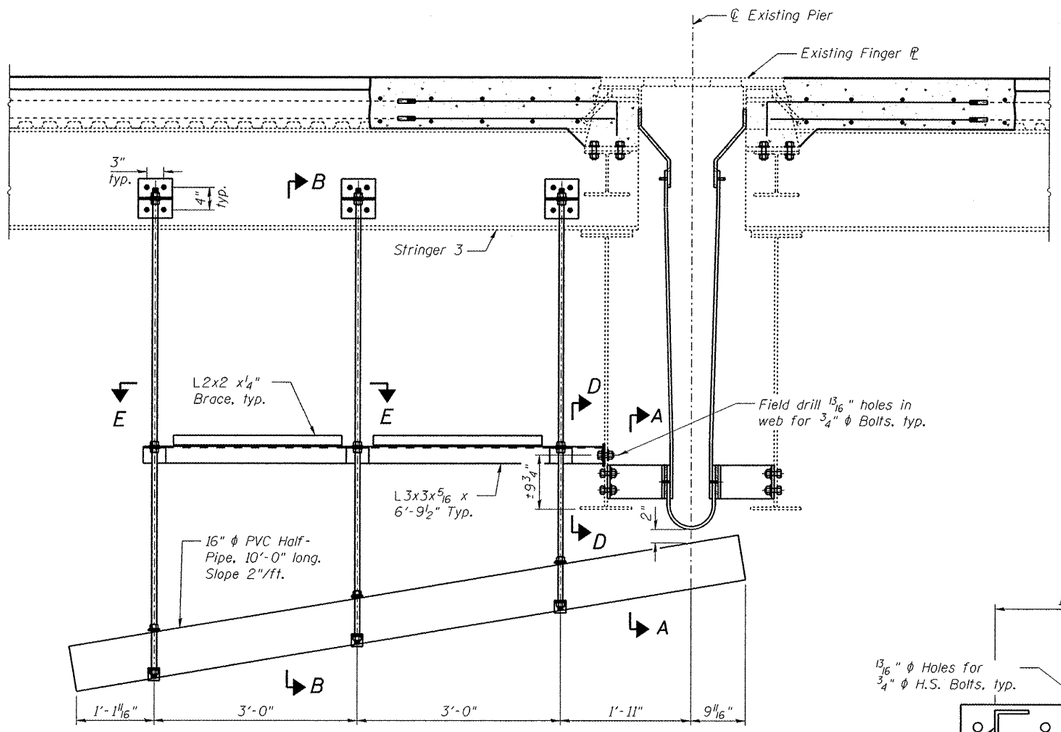

SECTION THRU TROUGH DRAIN AT PIER

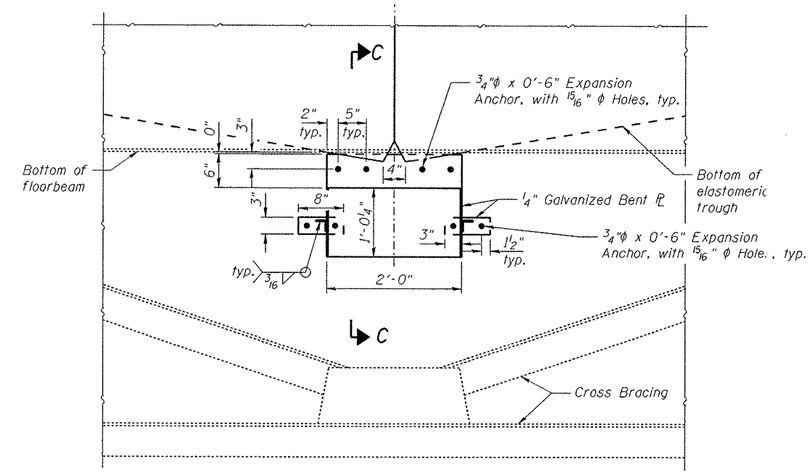

ELEVATION AT ABUTMENT TROUGH DRAIN

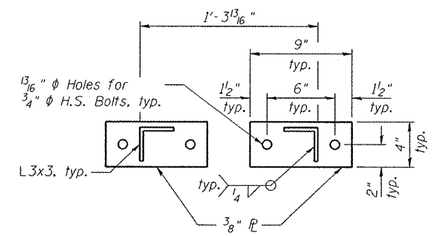

SECTION D-D

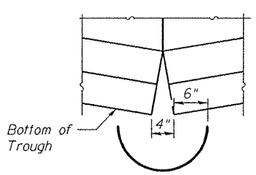

SECTION A-A

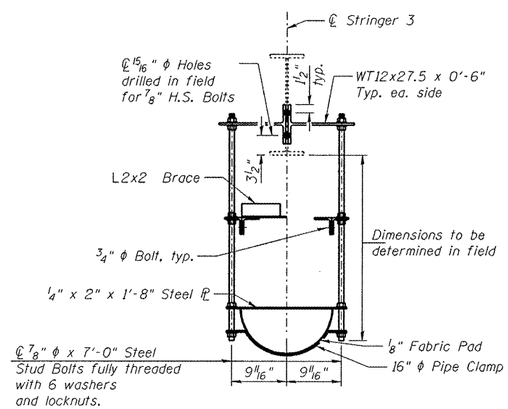

SECTION B-B

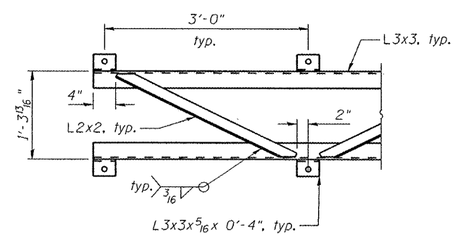

SECTION E-E

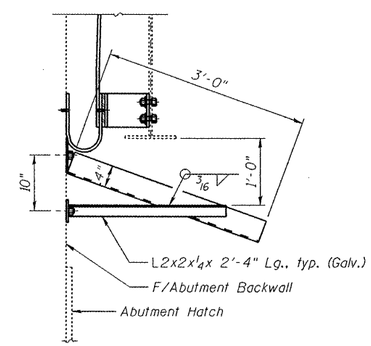

SECTION C-C

Note:
Cost of material and installation for drainage details shall be included with FABRIC REINFORCED ELASTOMERIC TROUGH.

FILE NAME =	USER NAME =	DESIGNED - BTO	REVISED -	STATE OF ILLINOIS DEPARTMENT OF TRANSPORTATION	FINGER PLATE TROUGH DRAINAGE DETAILS STRUCTURE NO. 090-0108 & 090-0109	F.A.I. RTE. 474	SECTION	COUNTY PEORIA & TAZEWELL	TOTAL SHEETS 129 / SHEET NO. 54
		CHECKED - JAN	REVISED -					CONTRACT NO. 68069	
	PLOT SCALE =	DRAWN - BTO	REVISED -						
	PLOT DATE =	CHECKED - JAN	REVISED -		SHEET NO. 40 OF 65 SHEETS		ILLINOIS	FED. AID PROJECT	

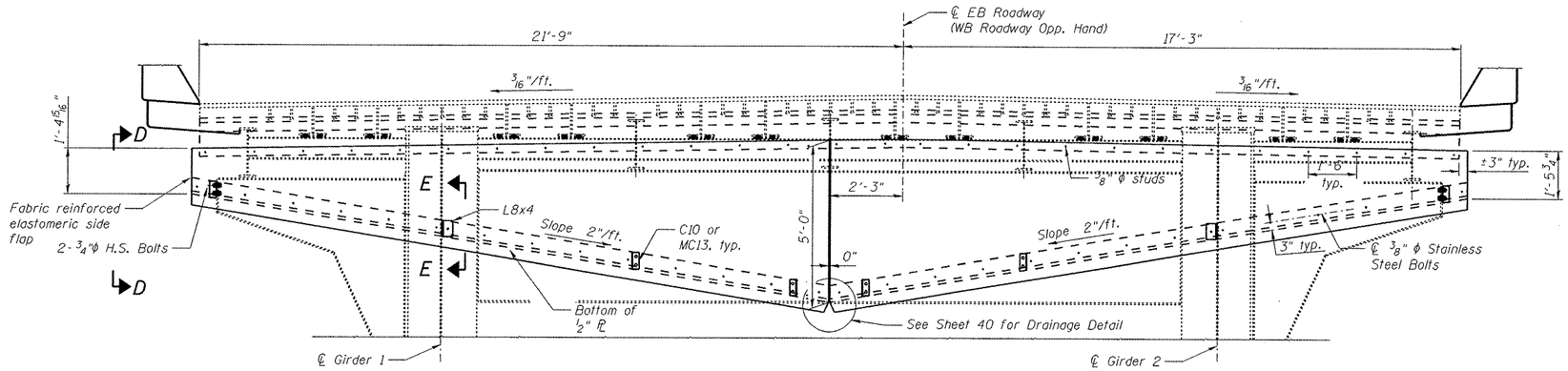

SECTION B-B

(Looking West)

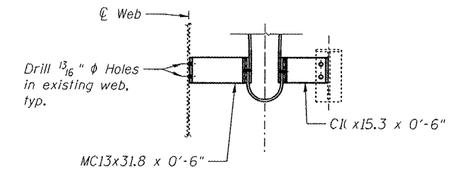

VIEW D-D

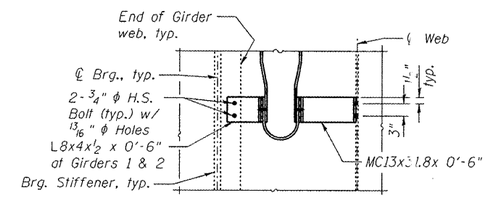

SECTION E-E

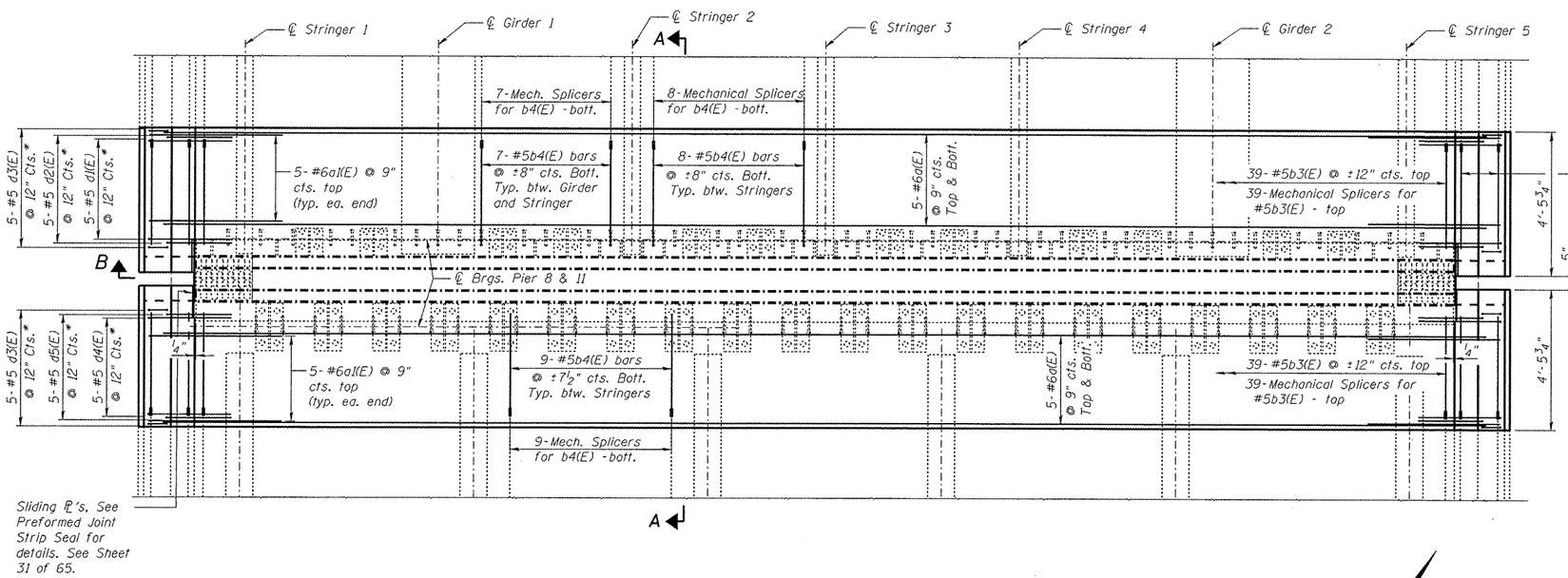

PIER 8 & 11 FINGER PLATE EXPANSION JOINT

PLAN

(Pier 8, eastbound shown, westbound opp. hand. Pier 11 similar)

N

FINGER PLATE TROUGH INSTALLATION PROCEDURE

1) Perimeter of concrete removal area shall be saw cut 3/4" prior to removal.

2) Remove Concrete Deck and parapet as shown. During concrete removal, care shall be taken to avoid damage to the existing finger ℞, studs, stools, diaphragms, and stringers. Any part of the Finger ℞ assembly damaged during removal shall be replaced at the Contractor's expense to the satisfaction of the Engineer.

3) After the concrete deck is removed, the finger ℞ and stools shall be removed in one piece and cleaned.

4) Clean and prep the existing angle edge and stool web. Weld new 1/2" trough ℞ per detail.

5) Prior to re-installation of the finger plate assembly, the Girder bearings shall be removed and replaced.

6) Install trough support channels and angles to match the slope shown.

7) Reinstall Finger ℞ assembly with new shims and bolts. Adjust stools to account for any temperature variation from 50°F.

8) Install trough to match slope shown.

FILE NAME =	USER NAME =	DESIGNED - BTO	REVISED -	STATE OF ILLINOIS DEPARTMENT OF TRANSPORTATION	PIER 8 & 11 FINGER PLATE TROUGH STRUCTURE NO. 090-0108 & 090-0109	F.A.I. RTE.	SECTION	COUNTY	TOTAL SHEETS	SHEET NO.
		CHECKED - JAN	REVISED -			474		PEORIA & TAZEWELL	229	75
	PLOT SCALE =	DRAWN - BTO	REVISED -					CONTRACT NO. 68069		
	PLOT DATE =	CHECKED - JAN	REVISED -		SHEET NO. 41 OF 65 SHEETS			ILLINOIS FED. AID PROJECT		

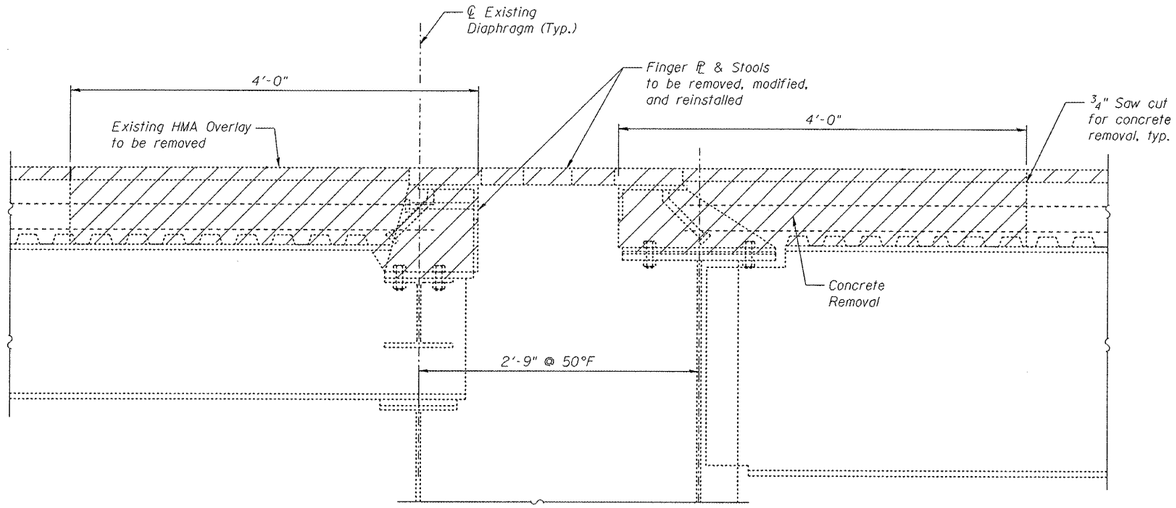

REMOVAL SECTION

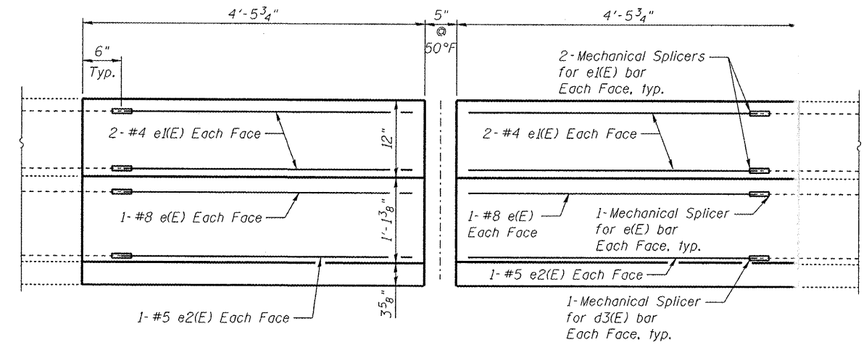

INSIDE ELEVATION OF PARAPET

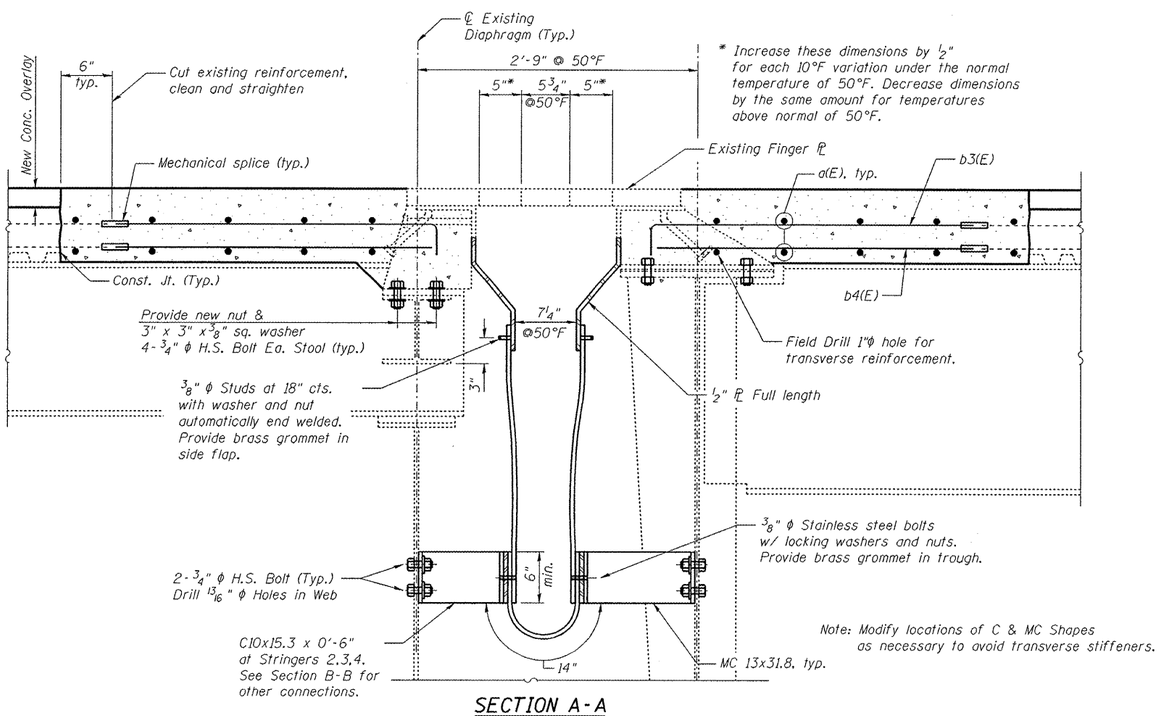

SECTION A-A

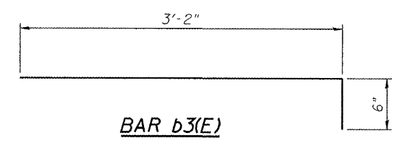

BAR b3(E)

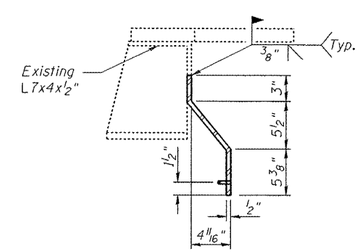

TROUGH ℄ DETAIL

Note:
See Shts. 39 and 48 for Parapet Reconstruction Details & Bars.

BILL OF MATERIAL

(for one joint)

Bar	No.	Size	Length	Shape
a(E)	20	#6	41'-0"	
a1(E)	20	#6	4'-0"	
b3(E)	78	#5	3'-8"	
b4(E)	121	#5	3'-2"	
d1(E)	10	#5	5'-2"	
d2(E)	10	#5	3'-7"	
d3(E)	20	#5	2'-1"	
d4(E)	10	#5	5'-2"	
d5(E)	10	#5	3'-7"	
e(E)	8	#8	3'-9"	
e1(E)	16	#4	3'-9"	
e2(E)	8	#5	3'-9"	
Concrete Removal			Cu. Yd.	10.1
Concrete Superstructure			Cu. Yd.	11.6
Reinforcement Bars, Epoxy Coated			Pound	2,560
Mechanical Splicers			Each	199
Remove and Reinstall Finger Plate Joint			Each	1
Fabric Reinforced Elastomeric Trough**			Foot	39.5

**All structural steel for connection , trough plates & shims, sliding plates, welding and studs and all high strength bolts shall be covered n this cost, which shall included all materials, equipment, labor, and installation.

FILE NAME =	USER NAME =	DESIGNED - BTO	REVISED -	STATE OF ILLINOIS DEPARTMENT OF TRANSPORTATION	PIER 8 & 11 FINGER PLATE TROUGH DETAILS STRUCTURE NO. 090-0108 & 090-0109	F.A.I. RTE. 474	SECTION	COUNTY PEORIA & TAZEWELL	TOTAL SHEETS 129	SHEET NO. F6
		CHECKED - JAN	REVISED -					CONTRACT NO. 68069		
	PLOT SCALE =	DRAWN - BTO	REVISED -		SHEET NO. 42 OF 65 SHEETS			ILLINOIS FED. AID PROJECT		
	PLOT DATE =	CHECKED - JAN	REVISED -							

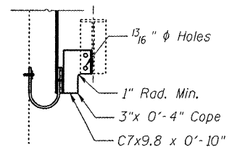

VIEW C-C

South end similar.
use C7x9.8 x 0'-6".

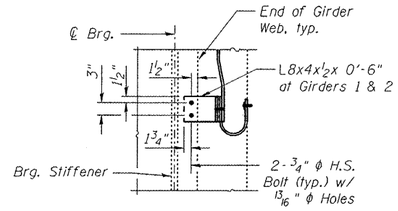

SECTION B-B

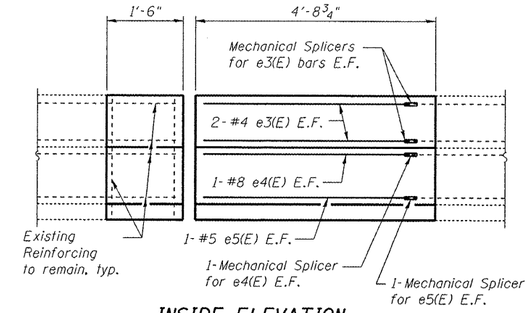

INSIDE ELEVATION OF PARAPET

FINGER PLATE TROUGH INSTALLATION PROCEDURE

1) Perimeter of concrete removal area shall be saw cut 3/4" prior to removal.

2) Remove Concrete Deck and parapet as shown. During concrete removal, care shall be taken to avoid damage to the existing finger ℙ, studs, stools, diaphragms, and stringers. Any part of the Finger ℙ assembly damaged during removal shall be replaced at the Contractor's expense to the satisfaction of the Engineer.

3) After the concrete deck is removed, the finger ℙ and stools shall be removed and cleaned.

4) Clean and prep the existing angle edge and signal web. Weld new 1/2" trough ℙ per detail.

5) Prior to re-installation of the finger plate assembly, the Girder bearings shall be removed and replaced.

6) Install trough support channels and angles to match the slope shown.

7) Reinstall Finger ℙ assembly with new shims and bolts. Adjust stools to account for any temperature variation from 50°F.

8) Install trough to match slope shown.

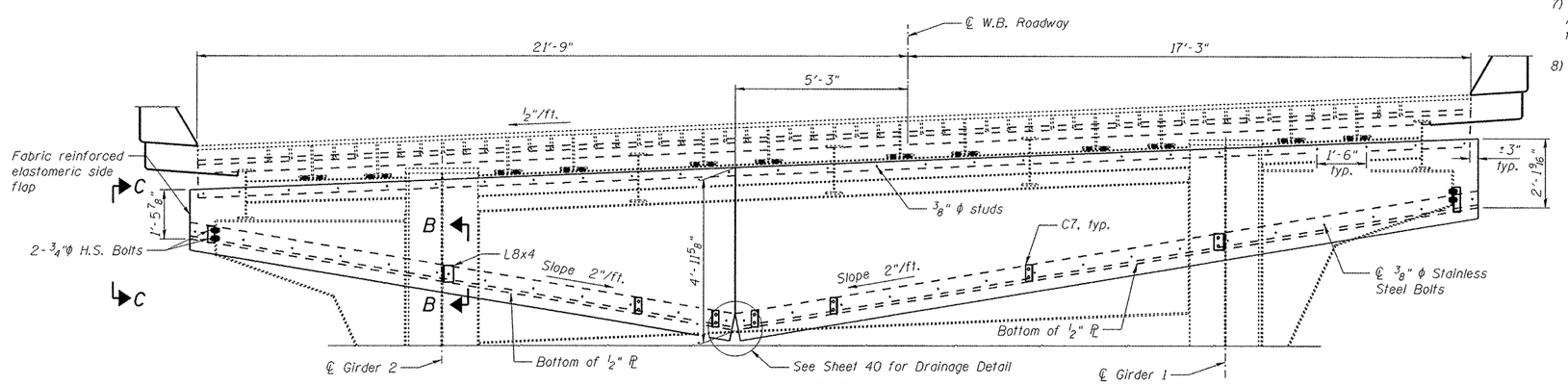

SECTION A-A

(Looking East)

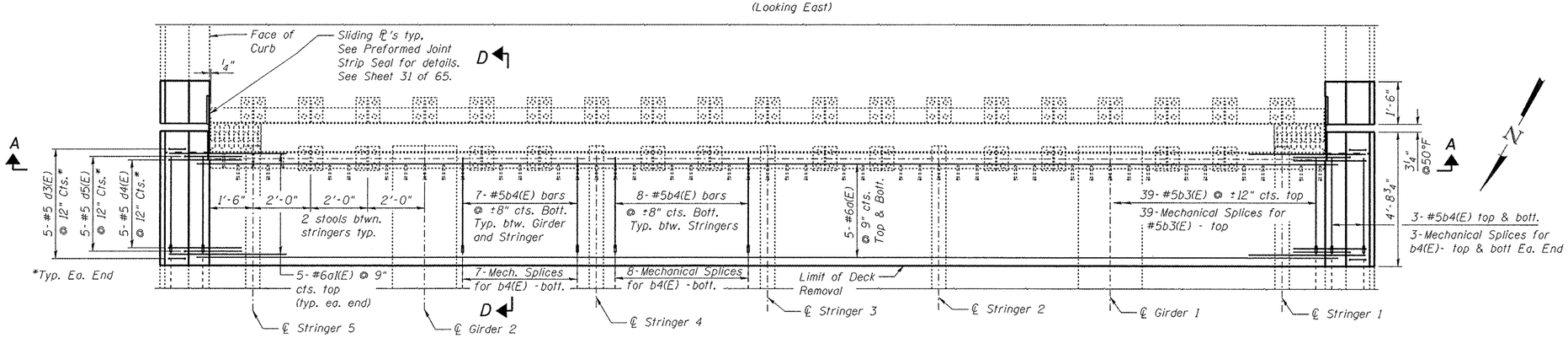

EAST ABUTMENT FINGER PLATE EXPANSION JOINT PLAN

FILE NAME =	USER NAME =	DESIGNED - BTO	REVISED -	STATE OF ILLINOIS DEPARTMENT OF TRANSPORTATION	EAST ABUTMENT FINGER PLATE TROUGH, WB STRUCTURE NO. 090-0109	F.A.I. RTE. 474	SECTION	COUNTY PEORIA & TAZEWELL	TOTAL SHEETS 129 / SHEET NO. 77
		CHECKED - JAN	REVISED -					CONTRACT NO. 68069	
	PLOT SCALE =	DRAWN - BTO	REVISED -						
	PLOT DATE =	CHECKED - JAN	REVISED -		SHEET NO. 43 OF 65 SHEETS			ILLINOIS FED. AID PROJECT	

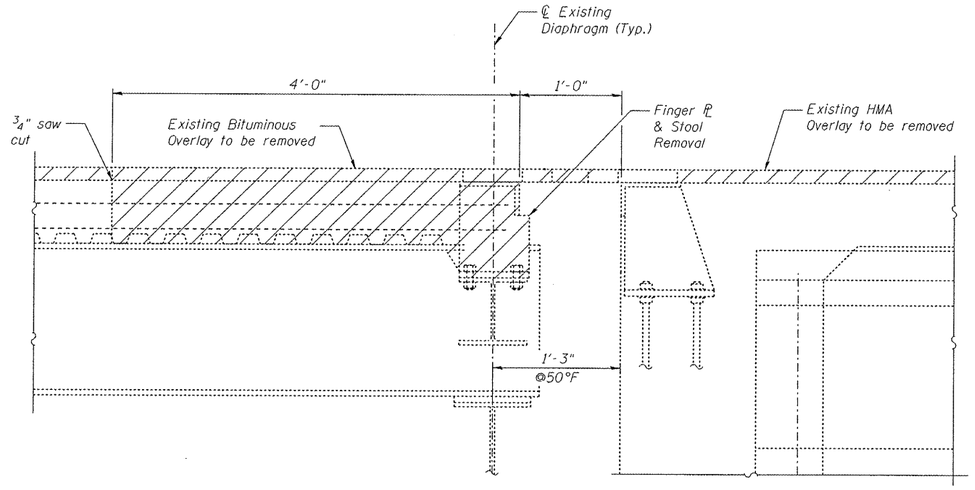

REMOVAL SECTION

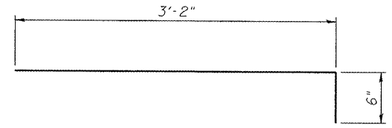

BAR b3(E)

Notes:
See Sht. 39 of 65 for parapet cross section and parapet bar details.

Existing Reinforcement Bars to remain in removal area shall be cleaned and incorporated into new construction. Cost included with CONCRETE REMOVAL.

BILL OF MATERIAL

Bar	No.	Size	Length	Shape
a(E)	10	#6	41'-0"	
a1(E)	10	#6	4'-0"	
b3(E)	39	#5	3'-8"	
b4(E)	64	#5	3'-2"	
d3(E)	10	#5	2'-1"	
d4(E)	10	#5	5'-2"	
d5(E)	10	#5	3'-7"	
e3(E)	8	#4	3'-11"	
e4(E)	4	#8	3'-11"	
e5(E)	4	#5	3'-11"	
Concrete Removal			Cu. Yd.	5.6
Concrete Superstructure			Cu. Yd.	6.7
Reinforcement Bars, Epoxy Coated			Pound	1,230
Mechanical Splicers			Each	99
Fabric Reinforced Elastomeric Trough*			Foot	39.5
Remove and Reinstall Finger Plate Joint			Each	1

*All structural steel for connections, trough plates & shims, sliding plates, welding and studs and all high strength bolts shall be covered in this cost, which shall included all materials, equipment, labor, and installation.

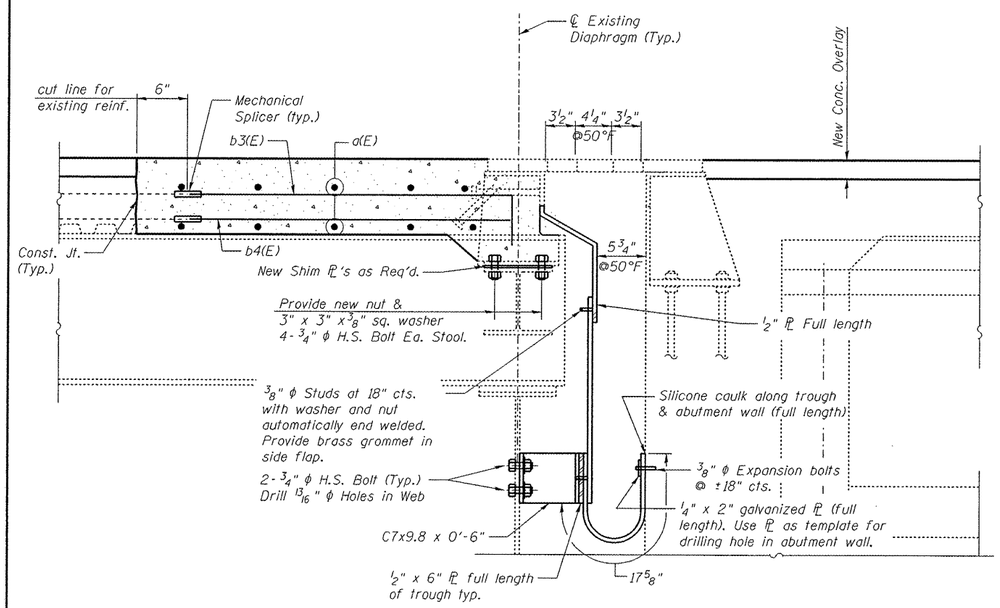

SECTION F-F

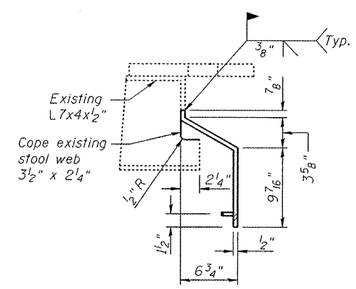

TROUGH ℙ DETAIL

FILE NAME =	USER NAME =	DESIGNED - BTO	REVISED -
		CHECKED - JAN	REVISED -
	PLOT SCALE =	DRAWN - BTO	REVISED -
	PLOT DATE =	CHECKED - JAN	REVISED -

STATE OF ILLINOIS
DEPARTMENT OF TRANSPORTATION

EAST ABUTMENT FINGER PLATE TROUGH DETAILS, WB
STRUCTURE NO. 090-0109

SHEET NO. 44 OF 65 SHEETS

F.A.I. RTE.	SECTION	COUNTY	TOTAL SHEETS	SHEET NO.
474		PEORIA & TAZEWELL	129	78
		CONTRACT NO. 68069		
		ILLINOIS FED. AID PROJECT		

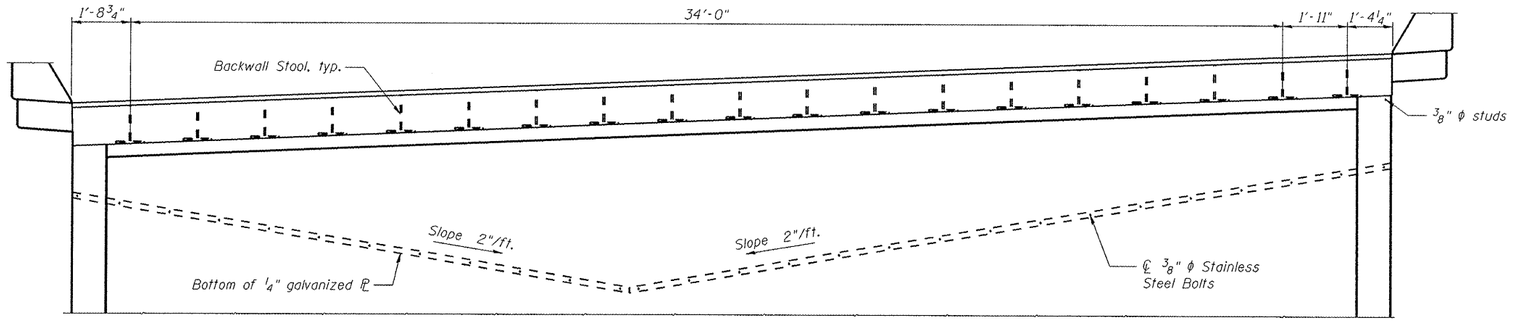

SECTION B-B

(Looking East)

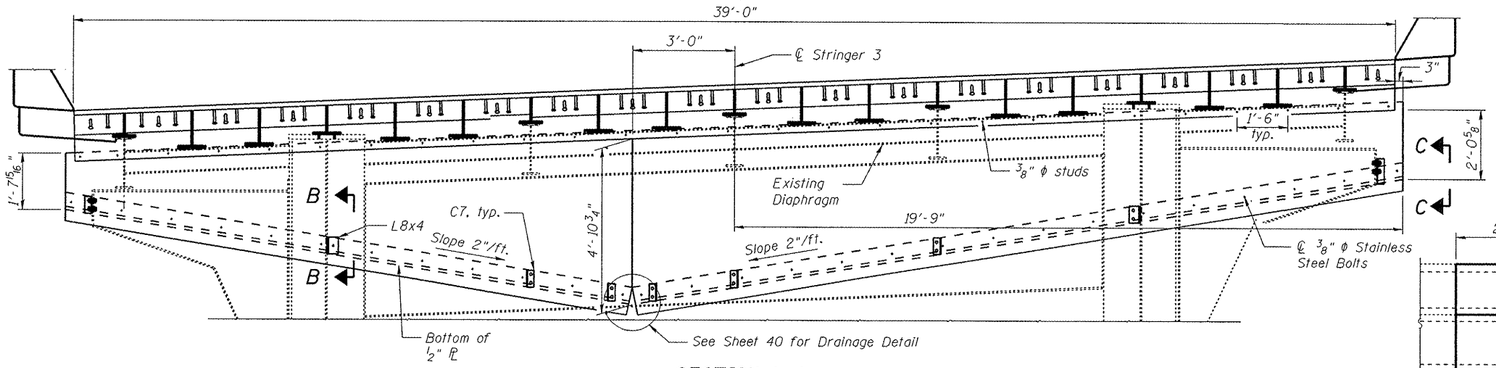

SECTION A-A

(Looking East)

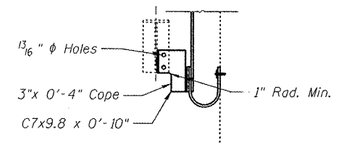

VIEW C-C

North end similar, use C7x9.8 x 0'-6".

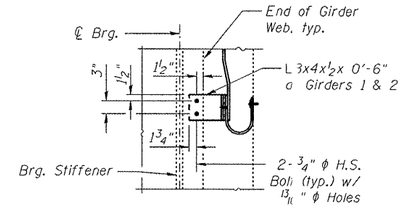

SECTION D-D

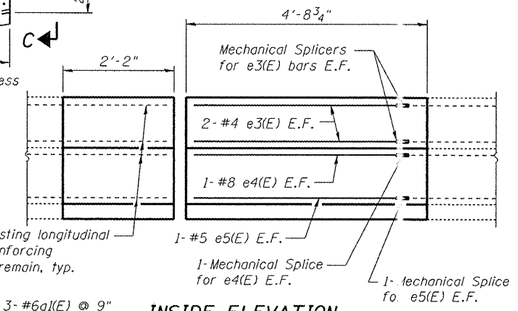

INSIDE ELEVATION OF PARAPET

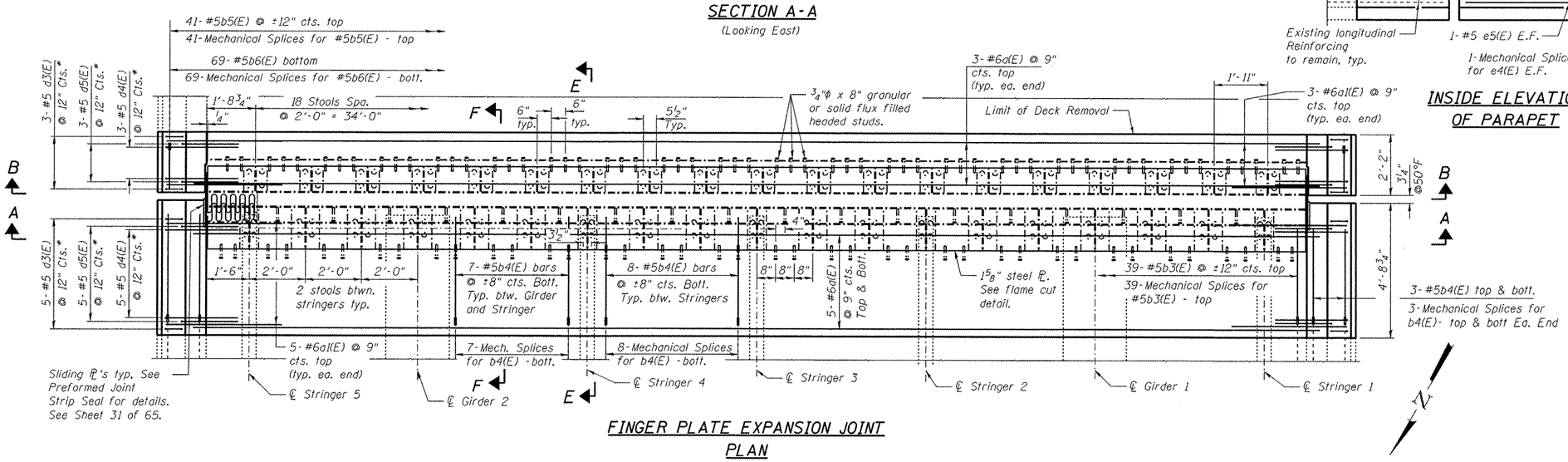

FINGER PLATE EXPANSION JOINT PLAN

FILE NAME =	USER NAME =	DESIGNED - BTO	REVISED -	STATE OF ILLINOIS DEPARTMENT OF TRANSPORTATION	EAST ABUTMENT FINGER PLATE EXPANSION JOINT, EB STRUCTURE NO. 090-0108	F.A.I. RTE.	SECTION	COUNTY	TOTAL SHEETS	SHEET NO.
		CHECKED - JAN	REVISED -			474		PEORIA & TAZEWELL	129	79
	PLOT SCALE =	DRAWN - BTO	REVISED -					CONTRACT NO. 68069		
	PLOT DATE =	CHECKED - JAN	REVISED -		SHEET NO. 45 OF 65 SHEETS			ILLINOIS FED. AID PROJECT		

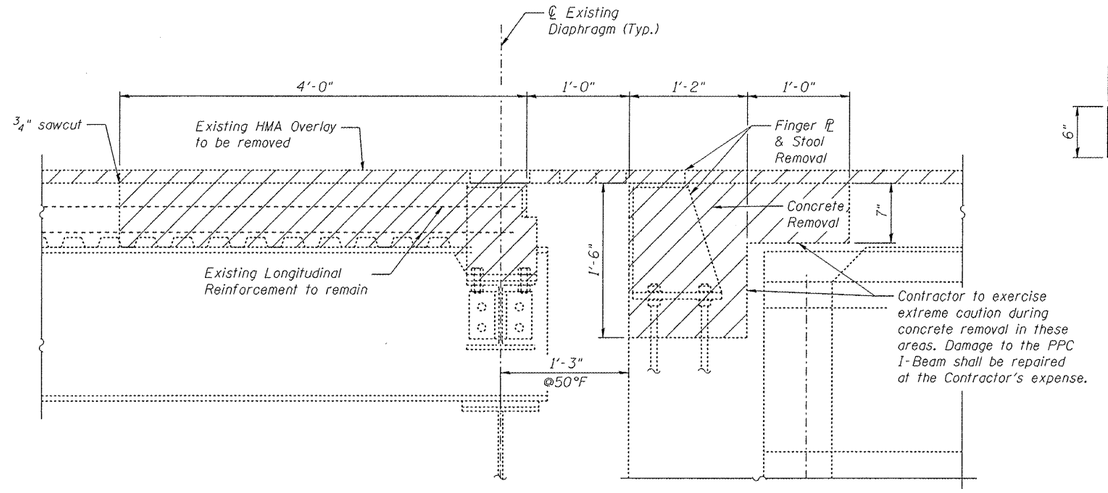

REMOVAL SECTION

Cost of removal and disposal of existing Finger Plate Expansion Joint is included in the cost of CONCRETE REMOVAL.

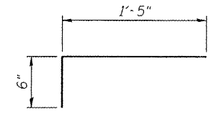

BAR b5(E)

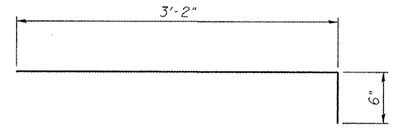

BAR b4(E)

Notes:
See Sht. 39 of 65 for parapet cross section and parapet bar details.

Existing Reinforcement Bars to remain in removal area shall be cleaned and incorporated into new construction. Cost included with CONCRETE REMOVAL.

BILL OF MATERIAL

Bar	No.	Size	Length	Shape
a(E)	16	#6	41'-0"	
a1(E)	16	#6	4'-0"	
b3(E)	39	#5	3'-8"	
b4(E)	64	#5	3'-2"	
b5(E)	41	#5	1'-11"	
b6(E)	69	#5	1'-5"	
d3(E)	16	#5	2'-1"	
d4(E)	16	#5	5'-2"	
d5(E)	16	#5	3'-7"	
e3(E)	8	#4	3'-11"	
e4(E)	4	#8	3'-11"	
e5(E)	4	#5	3'-11"	
Concrete Removal			Cu. Yd.	[illegible].4
Concrete Superstructure			Cu. Yd.	[illegible]0.7
Reinforcement Bars, Epoxy Coated			Pound	[illegible],390
Mechanical Splicers			Each	[illegible]09
Finger Plate Expansion Joint, 3"			Foot	[illegible]0.0
Fabric Reinforced Elastomeric Trough			Foot	[illegible]0.5

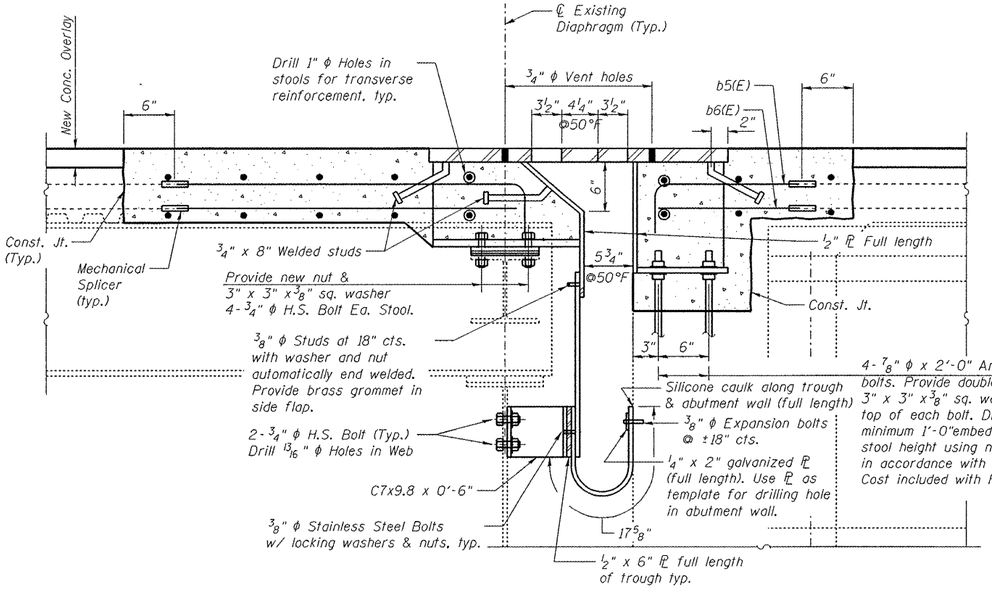

SECTION F-F

Note:
Provide one 1/2", one 1/4", one 1/8", and one 1/16" shim for height adjustment under all stools, typ.

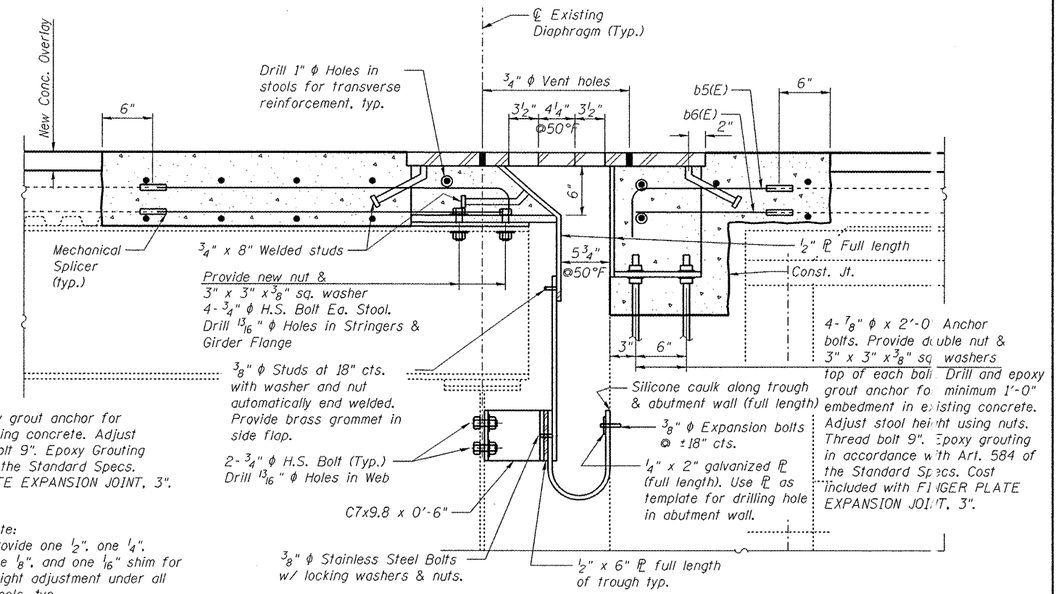

SECTION E-E

FILE NAME =	USER NAME =	DESIGNED - BTO	REVISED -	STATE OF ILLINOIS DEPARTMENT OF TRANSPORTATION	EAST ABUTMENT FINGER PLATE TROUGH DETAILS, EB STRUCTURE NO. 090-0108	F.A.I. RTE.	SECTION	COUNTY	TOTAL SHEETS	SHEET NO.
		CHECKED - JAN	REVISED -			474		PEORIA & TAZEWELL	124	80
	PLOT SCALE =	DRAWN - BTO	REVISED -					CONTRACT NO. 68069		
	PLOT DATE =	CHECKED - JAN	REVISED -		SHEET NO. 46 OF 65 SHEETS			ILLINOIS FED. AID PROJECT		

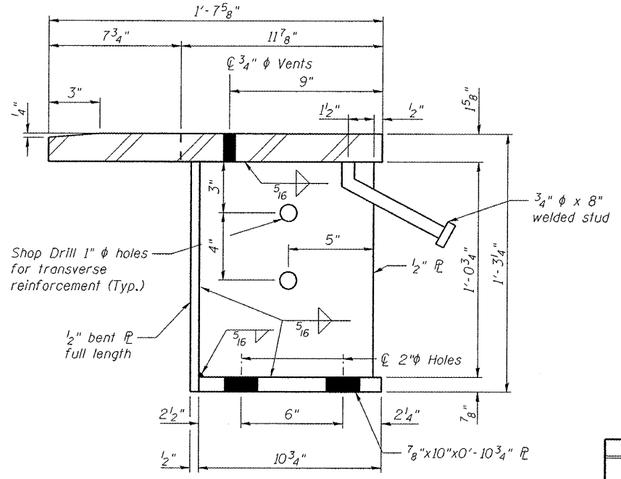

STOOL "B" DETAIL

(Located on Backwall)

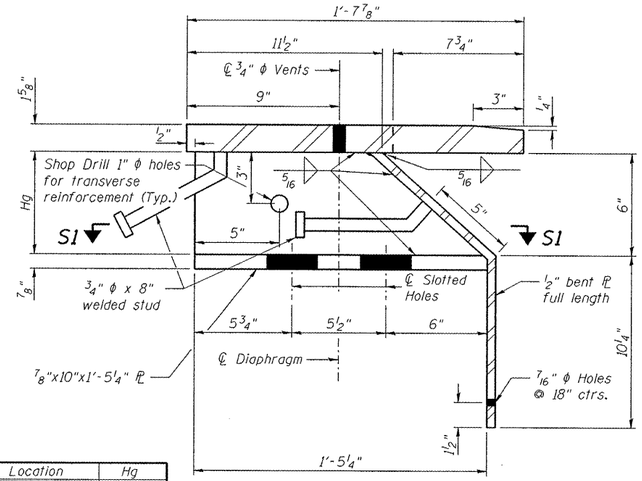

Location	Hg
Girder 1	5 1/4"
Girder 2	5 5/8"

STOOL "C" DETAIL

(Located on Girders)

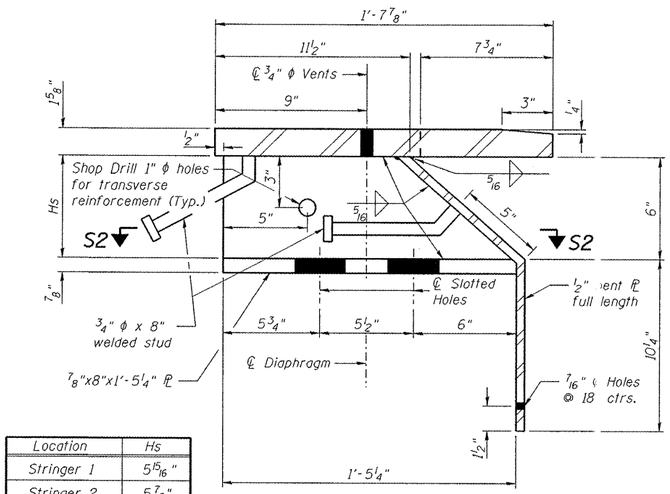

Location	Hs
Stringer 1	5 15/16"
Stringer 2	5 7/8"
Stringer 3	5 15/16"
Stringer 4	5 15/16"
Stringer 5	6 1/2"

STOOL "D" DETAIL

(Located on Stringers)

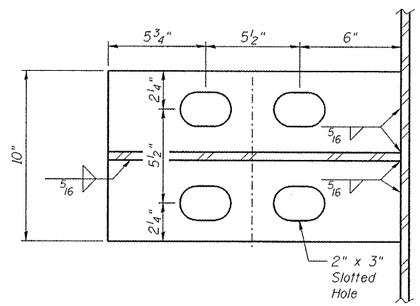

SECTION S1-S1

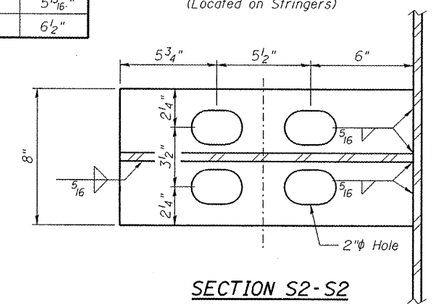

SECTION S2-S2

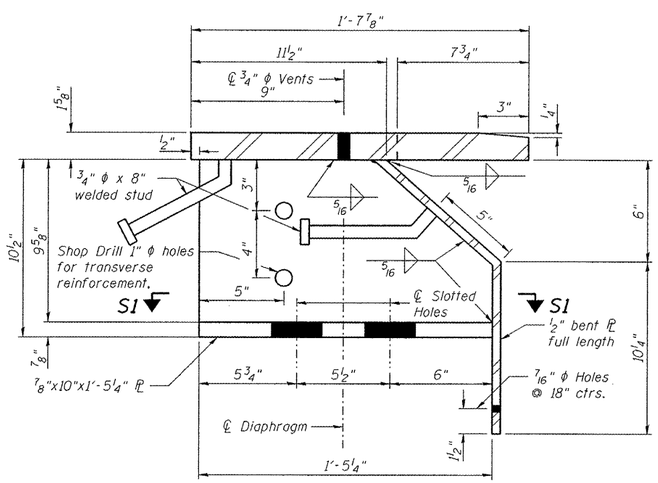

STOOL "A" DETAIL

(Located on Diaphragm)

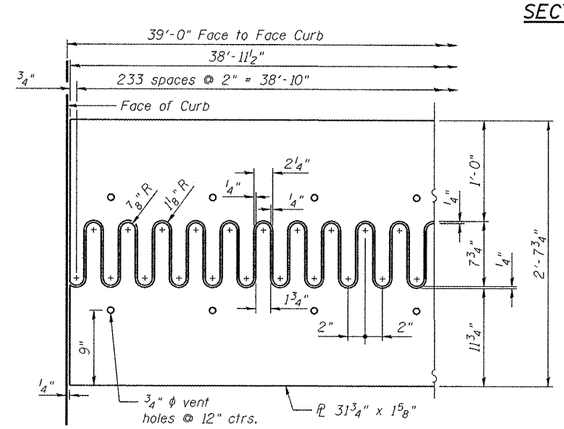

FLAME CUT PLATE DETAIL

Note:
Finger Plates, bent plates, side plates, shim plates, & stools shall be AASHTO M270 Grade 50.

FILE NAME =	USER NAME =	DESIGNED - BTO	REVISED -
		CHECKED - JAN	REVISED -
	PLOT SCALE =	DRAWN - BTO	REVISED -
	PLOT DATE =	CHECKED - JAN	REVISED -

STATE OF ILLINOIS
DEPARTMENT OF TRANSPORTATION

EAST ABUTMENT FINGER PLATE & STOOL DETAILS, EB
STRUCTURE NO. 090-0108

SHEET NO. 47 OF 65 SHEETS

F.A.I. RTE.	SECTION	COUNTY	TOTAL SHEETS	SHEET NO.
474		PEORIA & TAZEWELL	129	81
		CONTRACT NO. 68069		
		ILLINOIS FED. AID PROJECT		

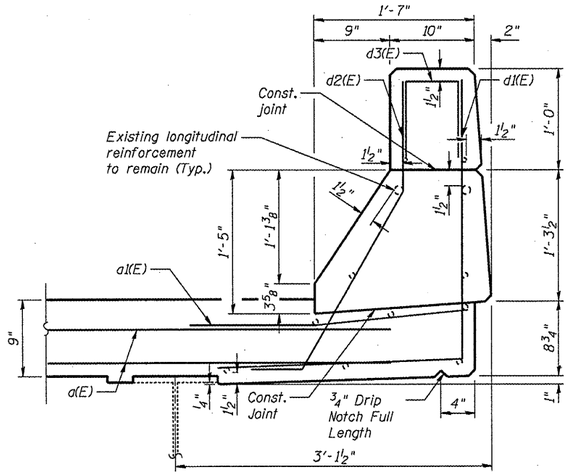

TRUSS PARAPET RECONSTRUCTION DETAIL

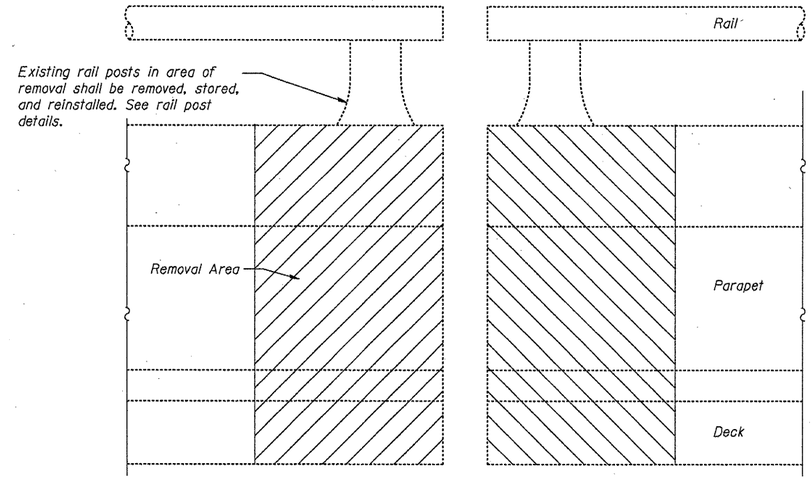

TYPICAL ELEVATION VIEW, INSIDE PARAPET FACE

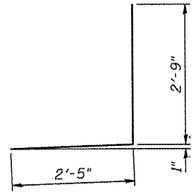

BAR d1(E)

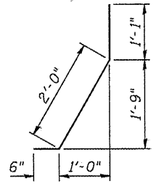

BAR d2(E)

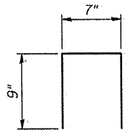

BAR d3(E)

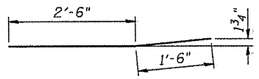

BAR a1(E)

Notes:

All Posts shall be normal to parapet.

In lieu of the cast-in-place anchor device shown, the Contractor has the option of drilling and setting stainless steel anchor rods of the same diameter and grade as the specified cap screws according to Article 509.06 of the Standard Specifications. Embedment shall be according to the manufacturer's specifications.

Removal and re-erection of the existing aluminum handrail, rail post, and all new applicable hardware, including labor and installation shall be included in the cost of CONCRETE REMOVAL.

Existing longitudinal reinforcement shall be cleaned and incorporated into the new construction. Cost included with CONCRETE REMOVAL.

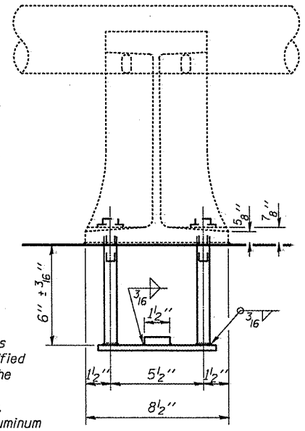

VIEW B-B

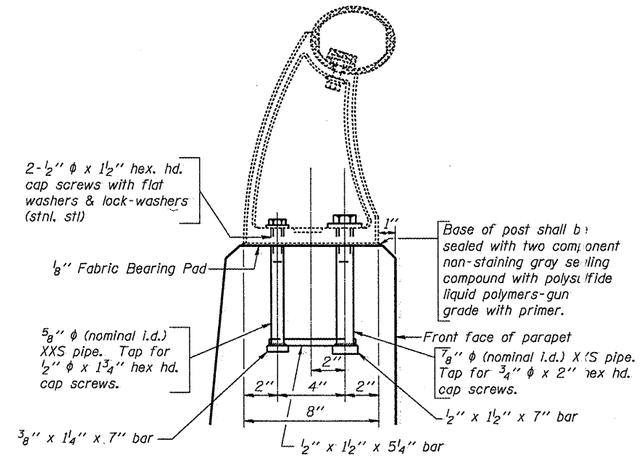

SECTION A-A

RAIL POST DETAILS

FILE NAME =	USER NAME =	DESIGNED - BTO	REVISED -	STATE OF ILLINOIS DEPARTMENT OF TRANSPORTATION	CONCRETE REMOVAL DETAILS STRUCTURE NO. 090-0108 & 090-0109	F.A.I. RTE.	SECTION	COUNTY	TOTAL SHEETS	SHEET NO.
		CHECKED - JAN	REVISED -			474		PEORIA & TAZEWELL	129	82
	PLOT SCALE =	DRAWN - RAB	REVISED -					CONTRACT NO. 68069		
	PLOT DATE =	CHECKED - BTO	REVISED -		SHEET NO. 48 OF 65 SHEETS			ILLINOIS FED. AID PROJECT		

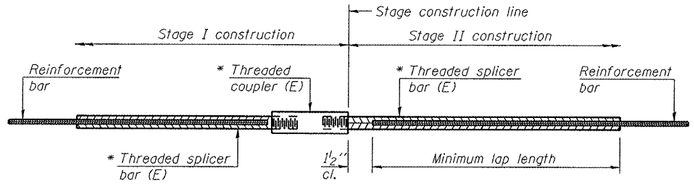

STANDARD BAR SPLICER ASSEMBLY

Minimum Lap Lengths					
Bar size to be spliced	Table 1	Table 2	Table 3	Table 4	Table 5
3, 4	1'-5"	1'-11"	2'-1"	2'-4"	2'-3"
5	1'-9"	2'-5"	2'-7"	2'-11"	2'-10"
6	2'-1"	2'-11"	3'-1"	3'-6"	3'-4"
7	2'-9"	3'-10"	4'-2"	4'-8"	4'-6"
8	3'-8"	5'-1"	5'-5"	6'-2"	5'-10"
9	4'-7"	6'-5"	6'-10"	7'-9"	7'-5"

Table 1: Black bar, 0.8 Class C
Table 2: Black bar, Top bar lap, 0.8 Class C
Table 3: Epoxy bar, 0.8 Class C
Table 4: Epoxy bar, Top bar lap, 0.8 Class C
Table 5: Epoxy bar, Top bar lap, Class B

Threaded splicer bar length = min. lap length + 1½" + thread length

* Epoxy not required on Bar Splicer Assembly components used in conjunction with black bars.

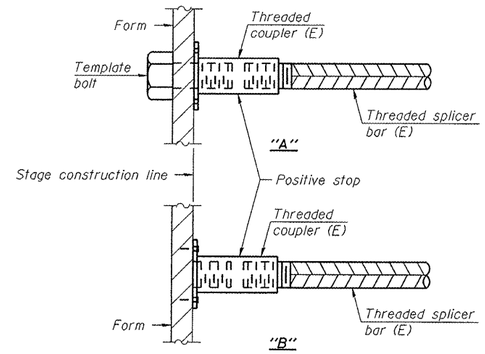

INSTALLATION AND SETTING METHODS

"A" : Set bar splicer assembly by means of a template bolt.
"B" : Set bar splicer assembly by nailing to wood forms or cementing to steel forms.
(E) : Indicates epoxy coating.

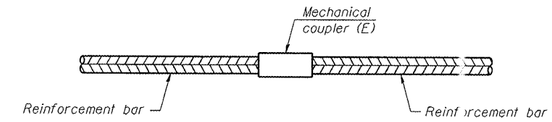

STANDARD MECHANICAL SPLICER

W.B. S.N. 090-0109

Location	Bar size	No. assemblies required
West Abutment, WB	#4	8
	#5	209
	#8	4
Pier 4, WB	#4	16
	#5	198
	#8	8
Pier 8, WB	#4	16
	#5	199
	#8	8
Pier 11, WB	#4	16
	#5	199
	#8	8
East Abutment, WB	#4	8
	#5	99
	#8	4

E.B. S.N. 090-0108

Location	Bar size	No. assemblies required
West Abutment, EB	#4	8
	#5	99
	#8	4
Pier 4, EB	#4	16
	#5	198
	#8	8
Pier 8, EB	#4	16
	#5	199
	#8	8
Pier 11, EB	#4	16
	#5	199
	#8	8
East Abutment, EB	#4	8
	#5	209
	#8	4

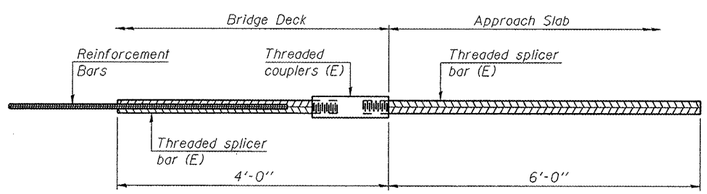

BAR SPLICER ASSEMBLY FOR #5 BAR ON INTEGRAL OR SEMI-INTEGRAL ABUTMENTS

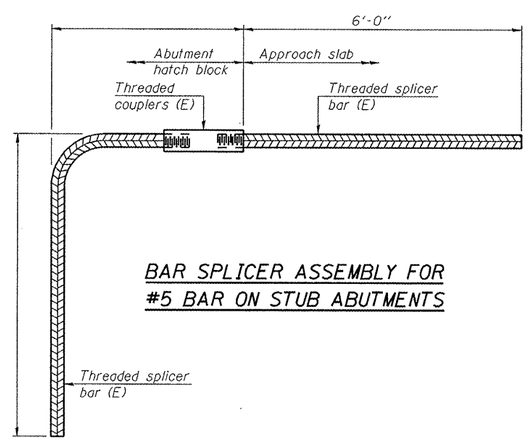

BAR SPLICER ASSEMBLY FOR #5 BAR ON STUB ABUTMENTS

NOTES

Splicer bars shall be deformed with threaded ends and have a minimum 60 ksi yield strength.

All reinforcement shall be lapped and tied to the splicer bars.

Bar splicer assemblies shall be epoxy coated according to the requirements for reinforcement bars. See Section 508 of the Standard Specifications.

See special provision for Mechanical Splicers.

See approved list of bar splicer assemblies and mechanical splicers for alternatives.

BSD-1 7-1-10

FILE NAME =	USER NAME =	DESIGNED - BTO	REVISED -
		CHECKED - JAN	REVISED -
	PLOT SCALE =	DRAWN - BTO	REVISED -
	PLOT DATE =	CHECKED - JAN	REVISED -

STATE OF ILLINOIS
DEPARTMENT OF TRANSPORTATION

MECHANICAL SPLICER DETAILS
STRUCTURE NO. 090-0108 & 090-0109

SHEET NO. 49 OF 65 SHEETS

F.A.I. RTE.	SECTION	COUNTY	TOTAL SHEETS	SHEET NO.
474		PEORIA & TAZEWELL	129	83
		CONTRACT NO. 68069		
		ILLINOIS FED. AID PROJECT		

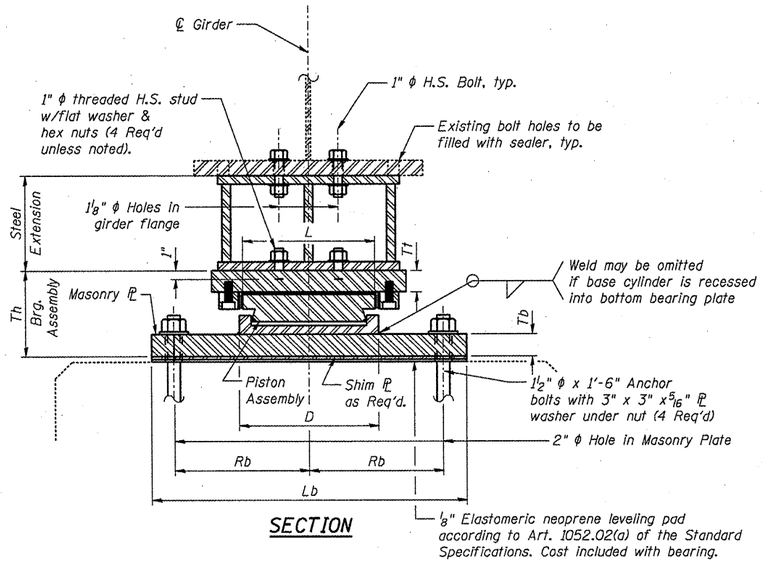

SECTION

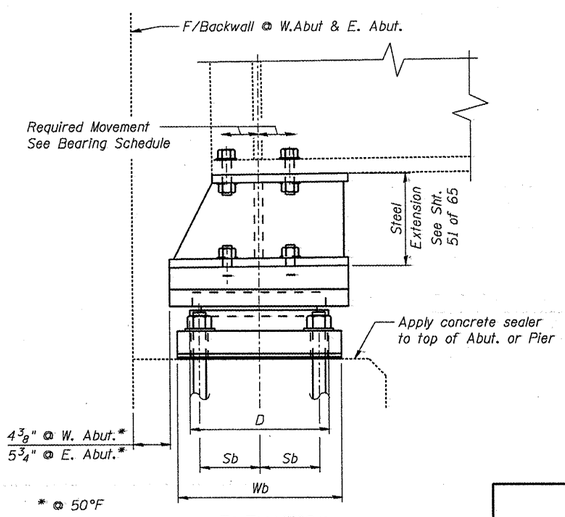

ELEVATION

GUIDED EXPANSION BEARING

BILL OF MATERIAL - BEARINGS

Item	Unit	Total
High Load Multi-Rotation Bearings, Guided Expansion, 450K	Each	4
High Load Multi-Rotation Bearings, Guided Expansion, 550K	Each	20
Jack and Remove Existing Bearings	Each	24
Anchor Bolts, 1½"	Each	96
Furnishing and Erecting Structural Steel	Pound	9,590

NOTES:

All structural steel for bearings shall be AASHTO M270, Grade 50.

Anchor bolts shall be F1554, Gr. 55.

Actual total bearing heights (Th) may differ from contract plans. Contractor to verify bearing heights and adjust extensions if required prior to ordering.

"Total Vertical Reaction" in table is the actual controlling vertical service load.

Inverted HLMR bearing configurations are not permitted.

See Sht. 51 of 65 for typical Existing Bearing Removal Detail.

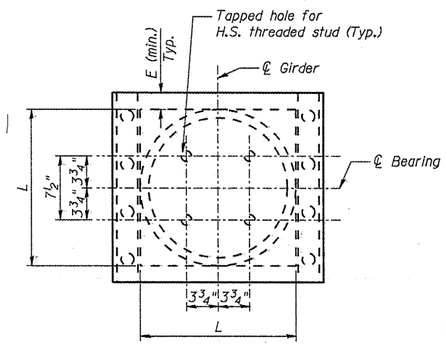

TOP BEARING ℙ AND PISTON PLAN

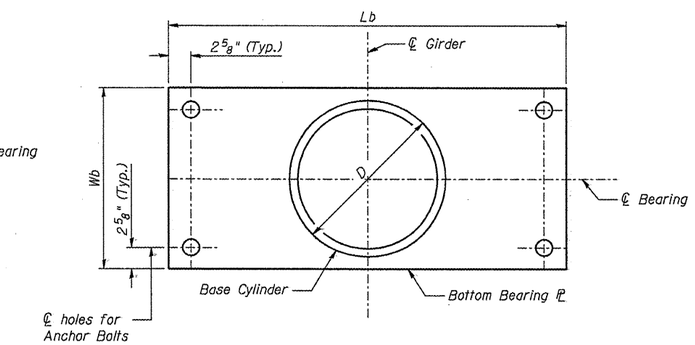

BOTTOM BEARING ℙ AND BASE CYLINDER PLAN

BEARING SCHEDULE

Type	Vertical Design Load (K)	Total Vertical Reaction (K)	Quantity (Each)	Location	Member	Total Required Movement	Th (in)	Top Plate Assembly				Bottom Plate Assembly						Steel Extension		
								L (in)	Tt (in)	E (in)	Top ℙ Slope (%)	D (in)	Lb (in)	Wb (in)	Tb (in)	Sb (in)	Rb (in)	We (in)	Le (in)	Te (in)
HLMR Guided Expansion	550	414	16	West Abutment, Pier 4, Pier 8	Girders	2½"	9½"	16½"	2½"	2½"	**	16½"	37¼"	19½"	2⅝"	7⅛"	16"	21¼"	21½"	10¾"
HLMR Guided Expansion	550	382	4	Pier 11	Girders	2¼"	9"	16½"	2½"	2¼"	1.14	16½"	30¼"	19½"	2"	7⅛"	12½"	20⅝"	21½"	11"
HLMR Guided Expansion	450	330	4	East Abutment	Girders	2¾"	8¾"	15"	2¼"	2¾"	1.14	15"	30¼"	18"	2"	6⅜"	12½"	20½"	20"	11¼"

** 3.41% W. Abut & Pier 4
1.14% Pier 8

FILE NAME =	USER NAME =	DESIGNED - BTO	REVISED -	STATE OF ILLINOIS DEPARTMENT OF TRANSPORTATION	APPROACH SPANS HLMR BEARING DETAILS STRUCTURE NO. 090-0108 & 090-0109	F.A.I. RTE. 474	SECTION	COUNTY PEORIA & TAZEWELL	TOTAL SHEETS 189	SHEET NO. 84
		CHECKED - JAN	REVISED -					CONTRACT NO. 68069		
	PLOT SCALE =	DRAWN - BTO	REVISED -					ILLINOIS FED. AID PROJECT		
	PLOT DATE =	CHECKED - JAN	REVISED -		SHEET NO. 50 OF 65 SHEETS					

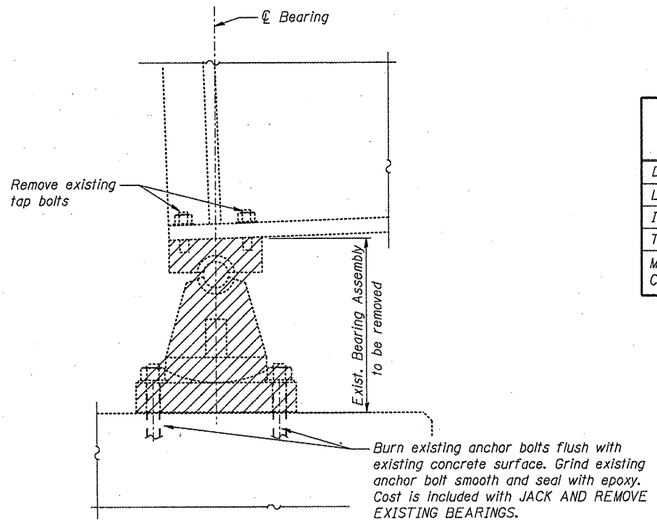

EXISTING BEARING REMOVAL DETAIL

GIRDER REACTION TABLE

(From Existing Plans)

	W. Abut. Pier 4 Pier 8	Pier 11	E. Abut.
Dead Load (K)	277	258	219
Live Load (K)	137	125	111
Impact (K)	22	21	21
Total (K)	436	404	351
Minimum Jack Capacity (Tons)	220	205	180

Notes:
All structural steel of the bearing assembly shall conform to the requirements of AASHTO M 270 Grade 50.

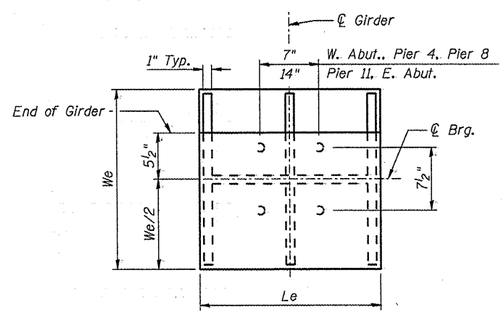

STEEL EXTENSION PLAN

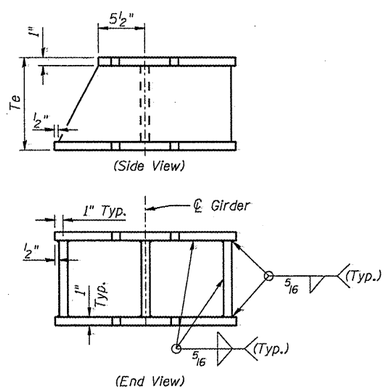

STEEL EXTENSION ELEVATION

FILE NAME =	USER NAME =	DESIGNED - BTO	REVISED -	STATE OF ILLINOIS DEPARTMENT OF TRANSPORTATION	BEARING REMOVAL AND EXTENSION DETAILS STRUCTURE NO. 090-0108 & 090-0109	F.A.I. RTE.	SECTION	COUNTY	TOTAL SHEETS	SHEET NO.
		CHECKED - JAN	REVISED -			474		PEORIA & TAZEWELL	129	85
	PLOT SCALE =	DRAWN - BTO	REVISED -					CONTRACT NO. 68069		
	PLOT DATE =	CHECKED - JAN	REVISED -		SHEET NO. 51 OF 65 SHEETS			ILLINOIS FED. AID PROJECT		

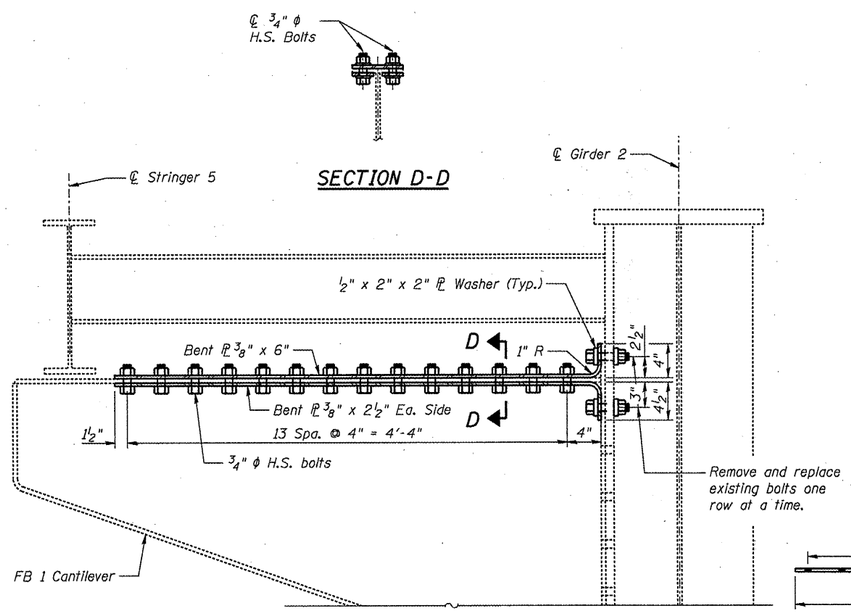

DETAIL 3

FB 1, Span 6 (S.N. 090-0109)
FB 1, Span 12 (S.N. 090-0108)

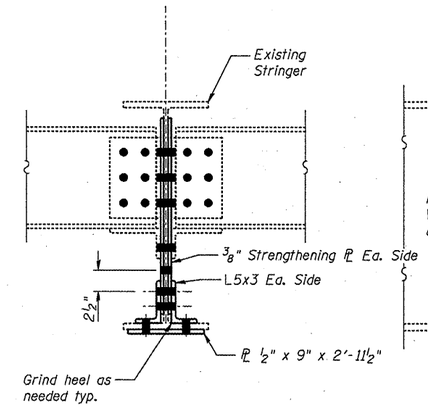

SECTION A-A

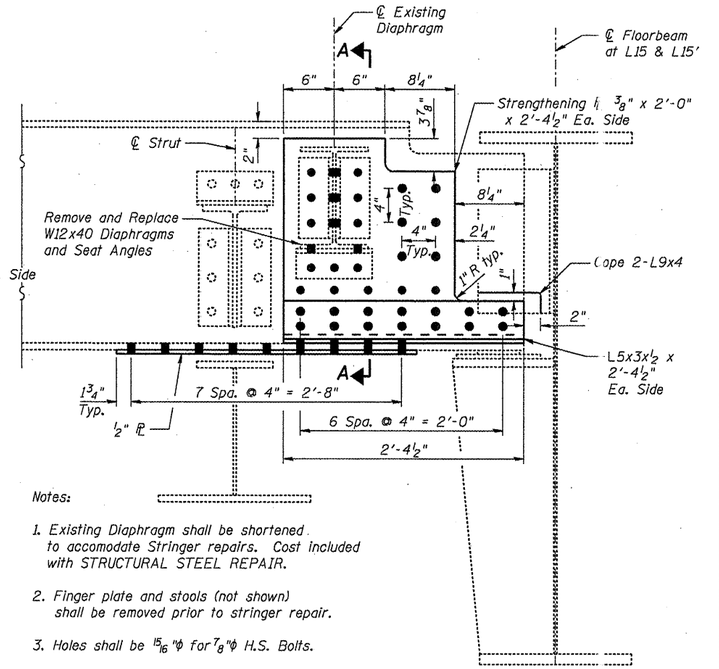

Notes:

1. Existing Diaphragm shall be shortened to accomodate Stringer repairs. Cost included with STRUCTURAL STEEL REPAIR.
2. Finger plate and stools (not shown) shall be removed prior to stringer repair.
3. Holes shall be 15/16" ϕ for 7/8" ϕ H.S. Bolts.

DETAIL 1

Span 10, Str.1, Str.2, Str.3, Str.4, & Str.5 @ FB15 (S.N. 090-0108)
Span 10, Str.1, Str.2, Str.3, Str.4, & Str.5 @ FB15' (S.N. 090-0108)

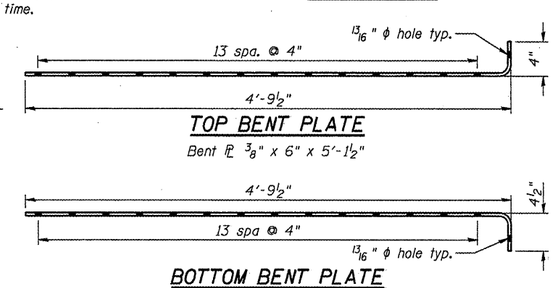

TOP BENT PLATE

Bent ℙ 3/8" x 6" x 5'-1 1/2"

BOTTOM BENT PLATE

Bent ℙ 3/8" x 2 1/2" x 5'-2"

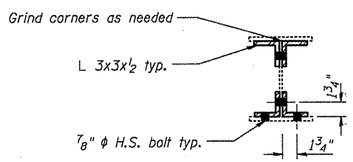

SECTION B-B

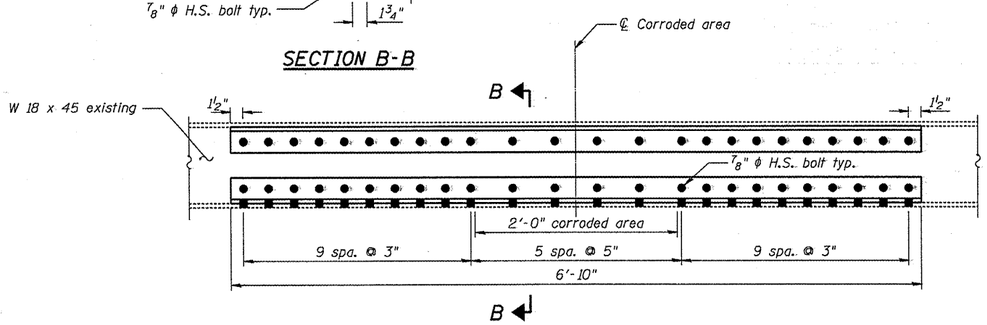

DETAIL 4

Str. 5 between FB. 3 & 4
Span 15
(S.N. 090-0108)

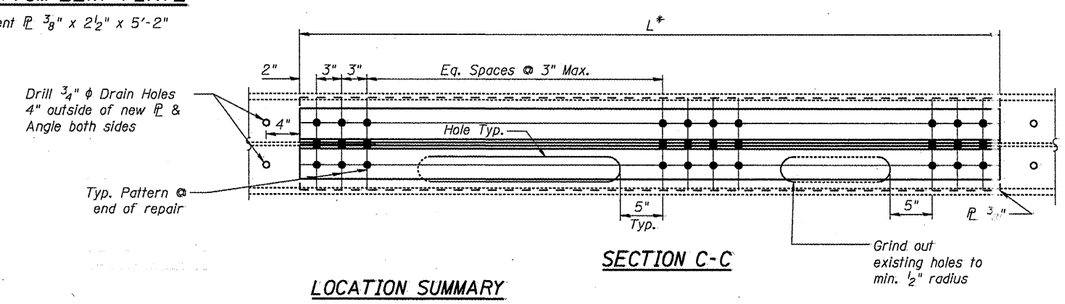

SECTION C-C

LOCATION SUMMARY

STRUCTURE	SPAN	MEMBER	L*
090-0109	Span 9	FB5S-Ctr. FB6	6'-11"
090-0109	Span 9	FB6S-Ctr. FB7	6'-11"
090-0109	Span 9	FB7S-Ctr. FB8	6'-11"
090-0109	Span 10	FB17N-Ctr. FB18	8'-0"
090-0108	Span 10	FB17N-Ctr. FB18	12'-0"
090-0108	Span 10	FB16'N-Ctr. FB17'	20'-0"

See plan sheets for exact locations
*Contractor shall verify Length prior to ordering material

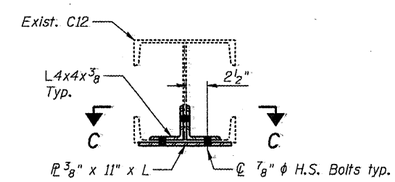

DETAIL 5

FILE NAME =	USER NAME =	DESIGNED - JAN	REVISED -	STATE OF ILLINOIS DEPARTMENT OF TRANSPORTATION	STRUCTURAL STEEL REPAIR DETAILS, SHEET 1 STRUCTURE NO. 090-0108 & 090-0109	F.A.I. RTE. 474	SECTION	COUNTY PEORIA & TAZEWELL	TOTAL SHEETS 128 / SHEET NO. 86
		CHECKED - BTO	REVISED -					CONTRACT NO. 68069	
	PLOT SCALE =	DRAWN - RAB	REVISED -		SHEET NO. 52 OF 65 SHEETS		ILLINOIS	FED. AID PROJECT	
	PLOT DATE =	CHECKED - JAN	REVISED -						

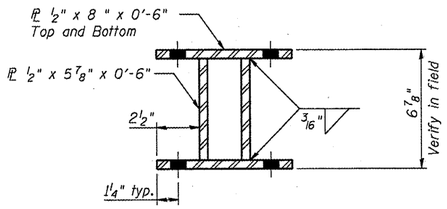

SECTION A-A

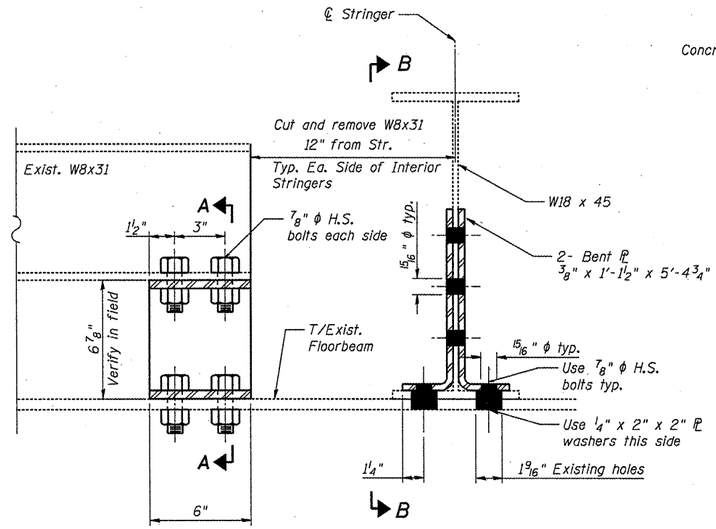

DETAIL 2

SN 090-0109
Str. 2, Str. 3, & Str.5, Span 5
Str. 1, Span 12
Str. 1, Str. 2, Str. 3 & Str. 4, Span 16

SN 090-0108
Str. 2 & Str.5, Span 5
Str. 3 @ FB1, Span 12
Str. 5 @ FB11, Span 16

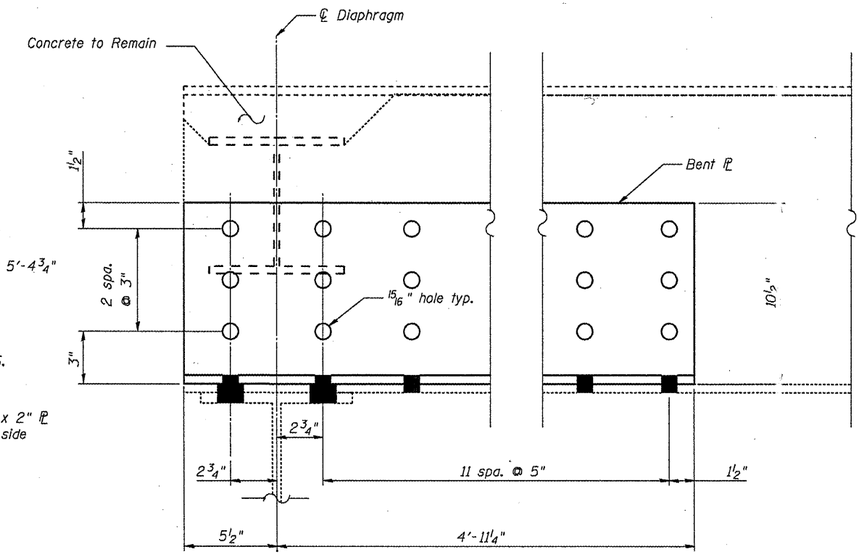

SECTION B-B

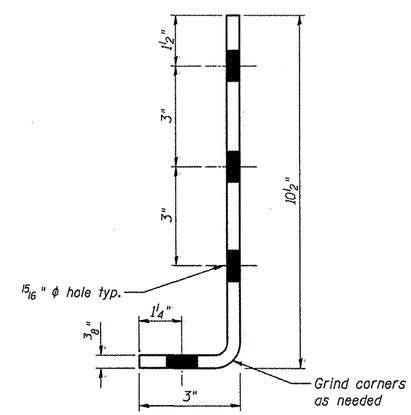

BENT PLATES

Bent PL 3/8" x 1'-1 1/2" x 5'-4 3/4"

FILE NAME =	USER NAME =	DESIGNED - JAN	REVISED -	STATE OF ILLINOIS DEPARTMENT OF TRANSPORTATION	STRUCTURAL STEEL REPAIR DETAILS, SHEET 2 STRUCTURE NO.090-0108 & 090-0109	F.A.I. RTE.	SECTION	COUNTY	TOTAL SHEETS	SHEET NO.
		CHECKED - RAB	REVISED -			474		PEORIA & TAZEWELL	129	87
	PLOT SCALE =	DRAWN - RAB	REVISED -					CONTRACT NO. 68069		
	PLOT DATE =	CHECKED - JAN	REVISED -		SHEET NO. 53 OF 65 SHEETS		ILLINOIS	FED. AID PROJECT		

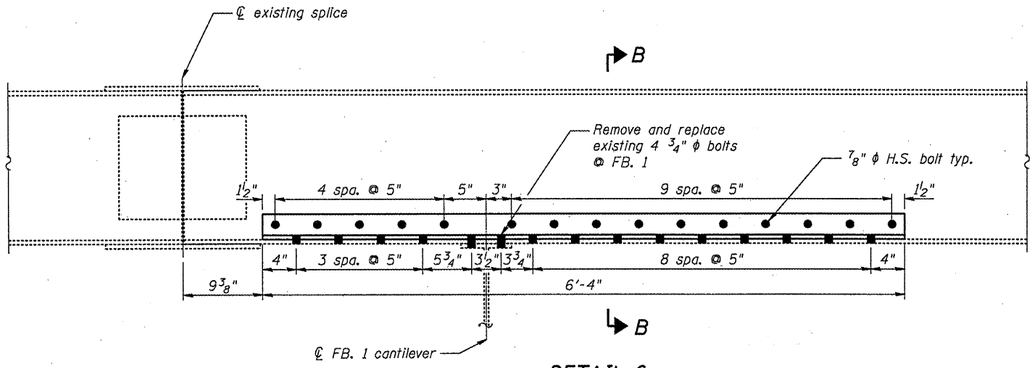

DETAIL 6

Str. 5 over FB. 1, Span 14-15 (S.N. 090-0108)
Str. 5 over FB. 1, Span 5-6 (S.N. 090-0109)

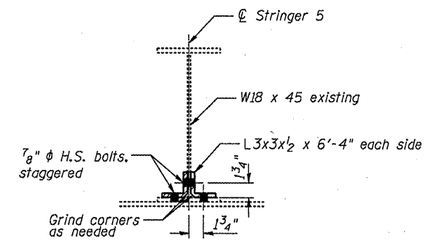

SECTION B-B

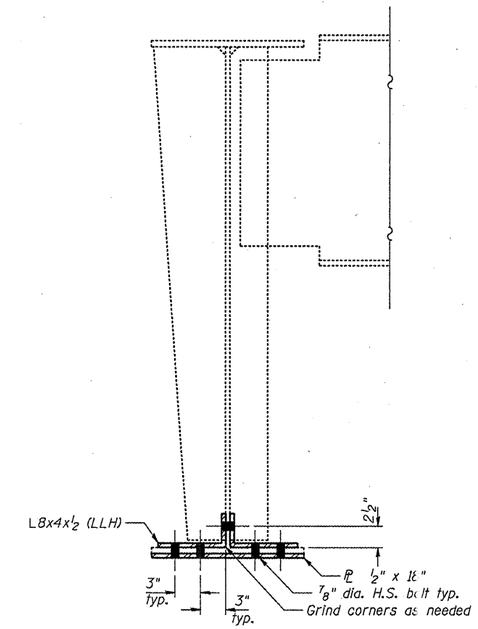

SECTION A-A

Note:
Gaps between the existing steel and the new steel angles and/or cover plates shall be sealed with an approved polyurethane sealant. The sealant shall be compatible with the proposed paint system and shall be submitted to the Engineer for approval prior to use. All costs associated with the installation of the sealant shall be included with the cost for STRUCTURAL STEEL REPAIR.

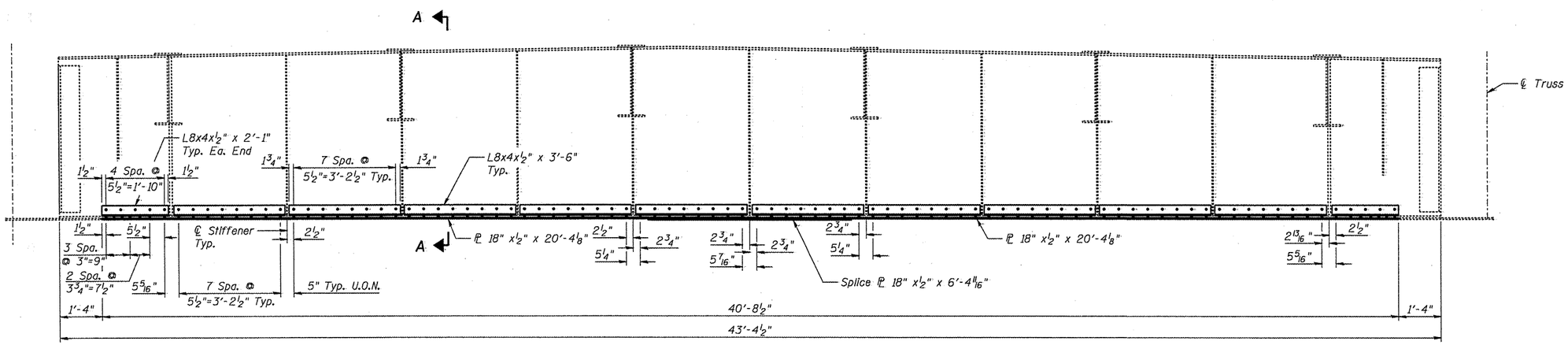

DETAIL 7
SPAN 9 FB. 0

(Looking East)
(S.N. 090-0108)

FILE NAME =	USER NAME =	DESIGNED - JAN	REVISED -
		CHECKED - BTO	REVISED -
	PLOT SCALE =	DRAWN - RAB	REVISED -
	PLOT DATE =	CHECKED - JAN	REVISED -

STATE OF ILLINOIS
DEPARTMENT OF TRANSPORTATION

STRUCTURAL STEEL REPAIR DETAILS, SHEET 3
STRUCTURE NO. 090-0108 & 090-0109
SHEET NO. 54 OF 65 SHEETS

F.A.I. RTE.	SECTION	COUNTY	TOTAL SHEETS	SHEET NO.
474		PEORIA & TAZEWELL	129	88
		CONTRACT NO. 68069		
		ILLINOIS FED. AID PROJECT		

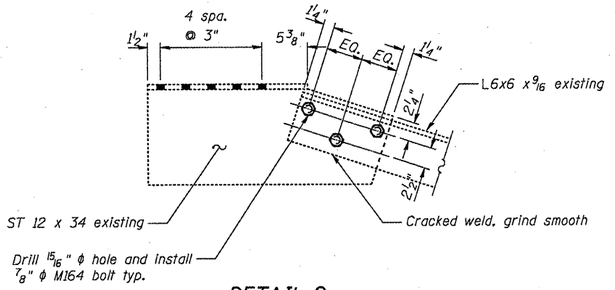

DETAIL 9

FB. 11 @ Girder 2 Span 16
S.N. 090-0109

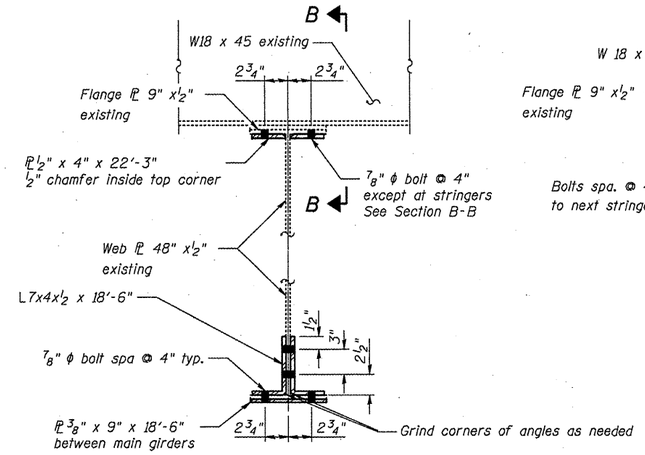

DETAIL 8

F.B. 1 Span 5, S.N. 090-0109
F.B. 11 Span 8, S.N. 090-0108
F.B. 1 Span 5, S.N. 090-0108

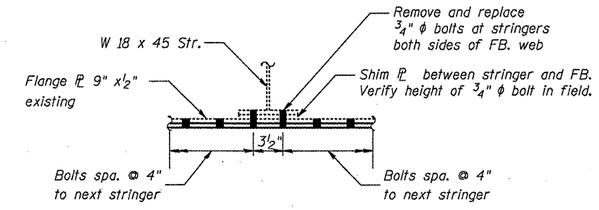

SECTION B-B

(Shown at stringer)

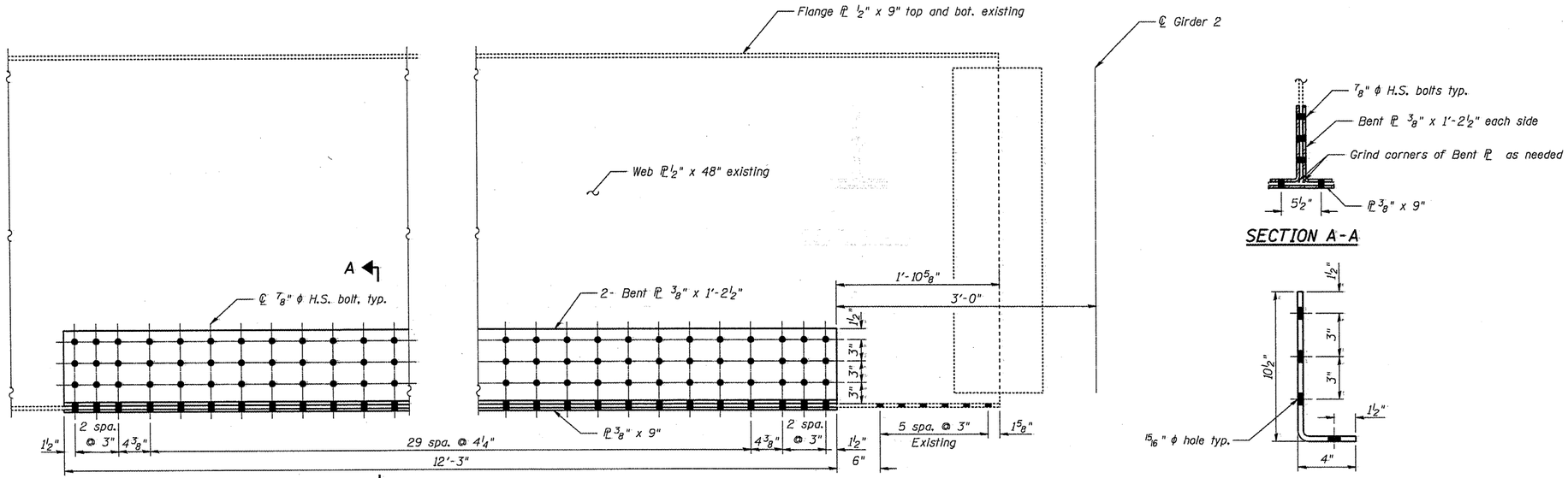

SECTION A-A

DETAIL 10

FB. 1 Span 1
S.N. 090-0108
& S.N. 090-0109

BENT PLATE

Bent PL ⅜" x 1'-2½" x 12'-3"

FILE NAME =	USER NAME =	DESIGNED - JAN	REVISED -	STATE OF ILLINOIS DEPARTMENT OF TRANSPORTATION	STRUCTURAL STEEL REPAIR DETAILS, SHEET 4 STRUCTURE NO. 090-0108 & 090-0109	F.A.I. RTE.	SECTION	COUNTY	TOTAL SHEETS	SHEET NO.
		CHECKED - RAB	REVISED -			474		PEORIA & TAZEWELL	129	89
	PLOT SCALE =	DRAWN - RAB	REVISED -					CONTRACT NO. 68069		
	PLOT DATE =	CHECKED - JAN	REVISED -		SHEET NO. 55 OF 65 SHEETS			ILLINOIS FED. AID PROJECT		

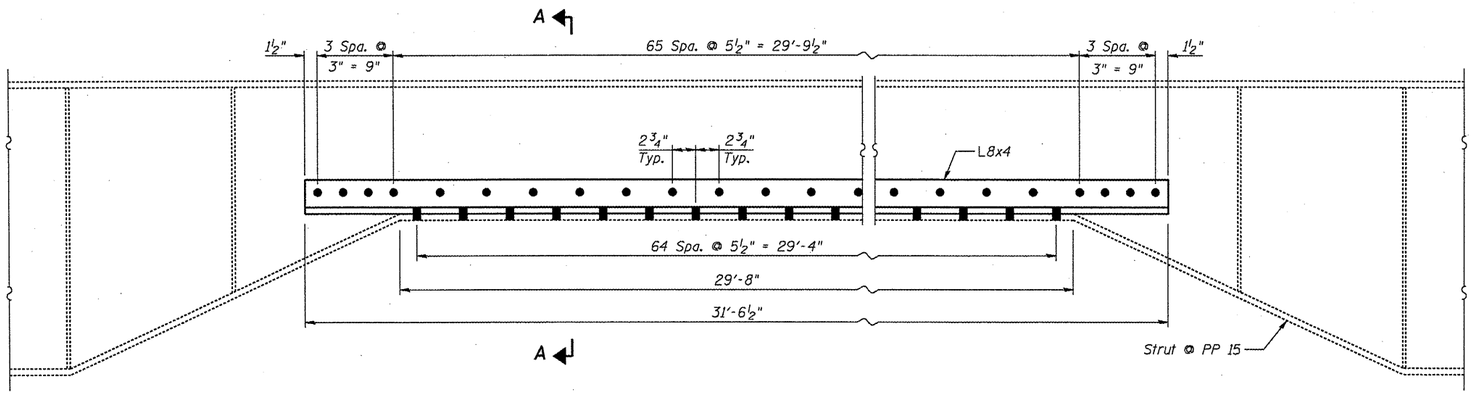

DETAIL 11

Span 10
S.N. 090-0108
(Looking East)

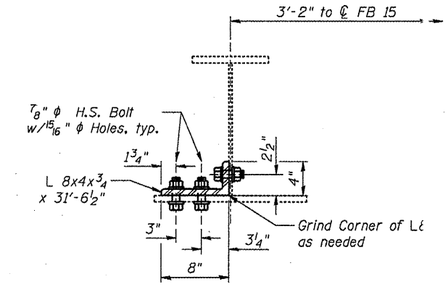

SECTION A-A

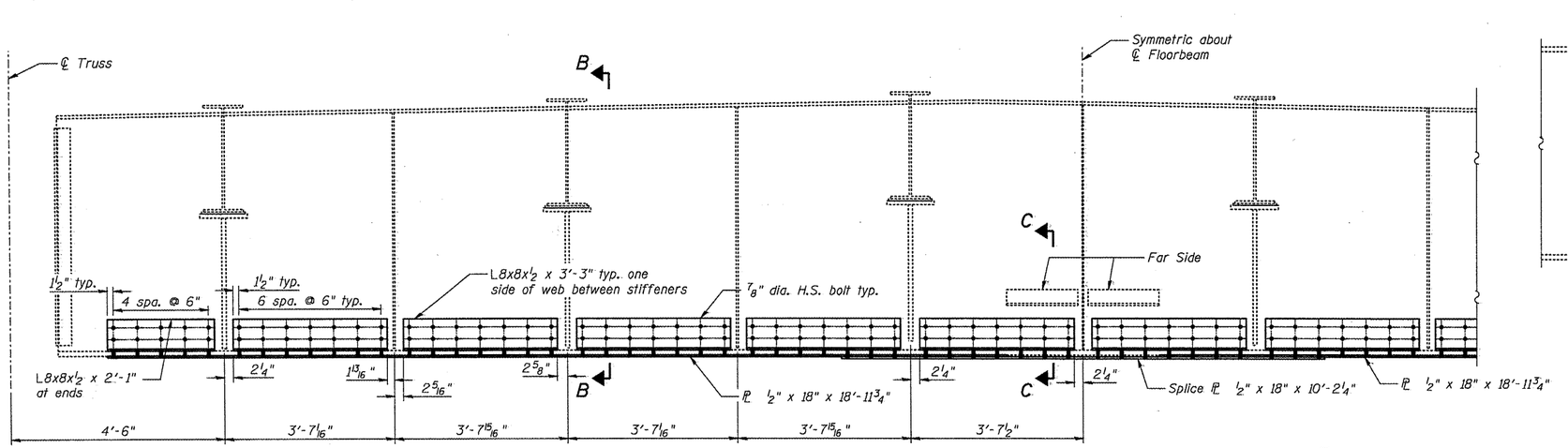

DETAIL 12

Span 10 FB. 15
S.N. 090-0108
(Looking East)

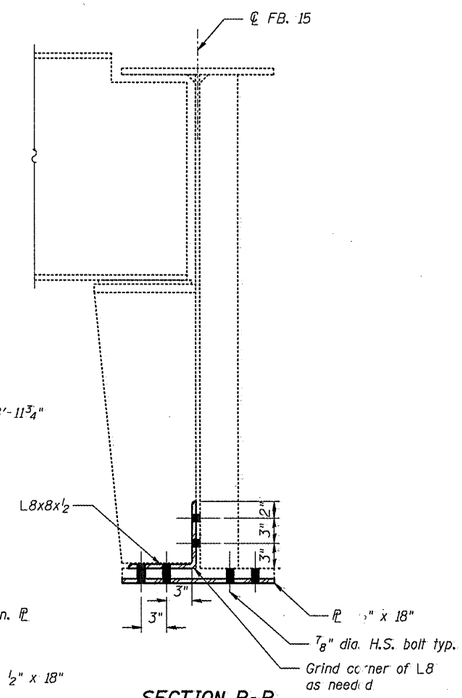

SECTION B-B

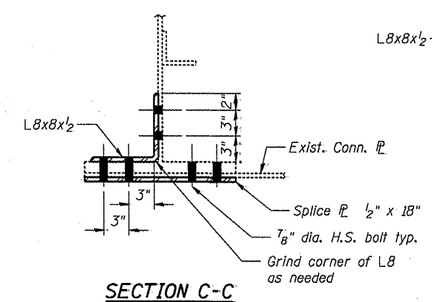

SECTION C-C

FILE NAME =	USER NAME =	DESIGNED - JAN	REVISED -	STATE OF ILLINOIS DEPARTMENT OF TRANSPORTATION	STRUCTURAL STEEL REPAIR DETAILS, SHEET 5 STRUCTURE NO. 090-0108 & 090-0109	F.A.I. RTE. 474	SECTION	COUNTY PEORIA & TAZEWELL	TOTAL SHEETS 129 / SHEET NO. 90
		CHECKED - BTO	REVISED -					CONTRACT NO. 68069	
	PLOT SCALE =	DRAWN - BTO	REVISED -						
	PLOT DATE =	CHECKED - JAN	REVISED -		SHEET NO. 56 OF 65 SHEETS			ILLINOIS FED. AID PROJECT	

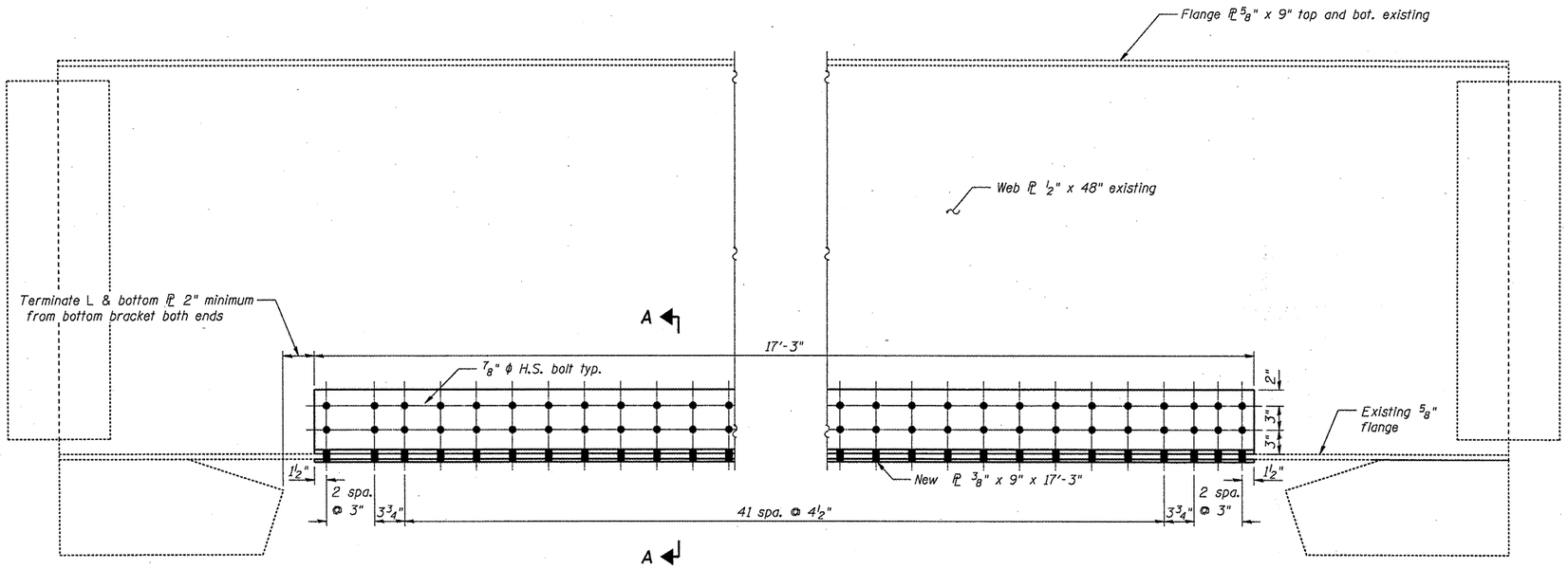

DETAIL 13

FB. 11 Span 16, S.N. 090-0108
FB. 1 Span 12, S.N. 090-0108

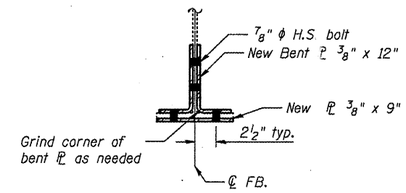

SECTION A-A

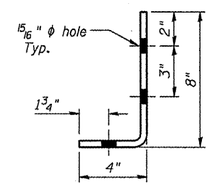

BENT PLATE

Bent PL 3/8" x 12" x 17'-3"

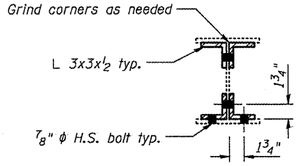

SECTION D-D

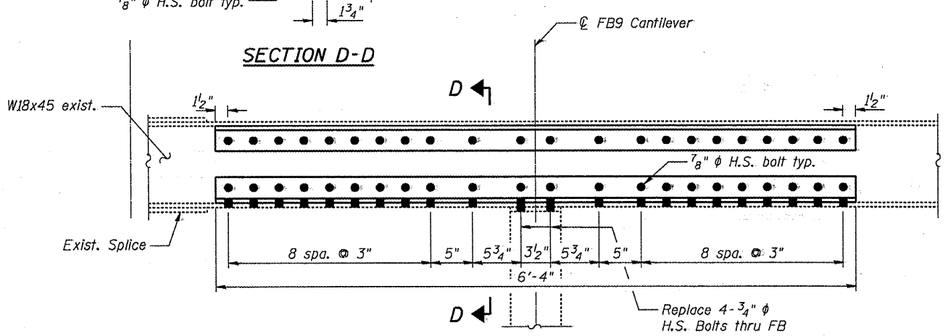

DETAIL 17

Str. 5 between ℄ FB9
Span 13
(S.N. 090-0109)

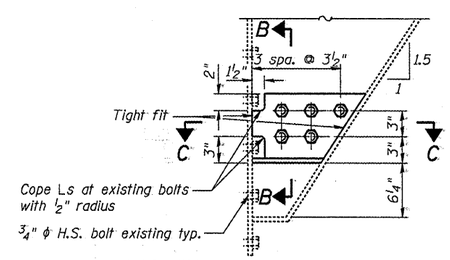

DETAIL 14

FB. 1 @ Stringer 5, Span 14-15
S.N. 090-0108

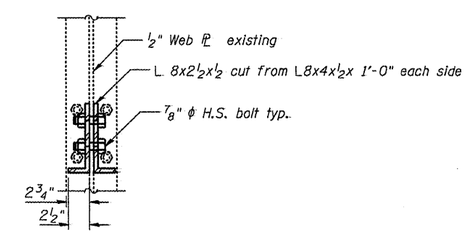

SECTION B-B

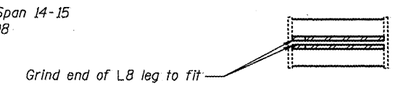

SECTION C-C

FILE NAME =	USER NAME =	DESIGNED - JAN	REVISED -	STATE OF ILLINOIS DEPARTMENT OF TRANSPORTATION	STRUCTURAL STEEL REPAIR DETAILS, SHEET 6 STRUCTURE NO. 090-0108 & 090-0109	F.A.I. RTE.	SECTION	COUNTY / TOTAL SHEETS / SHEET NO.
		CHECKED - RAB	REVISED -			474		PEORIA & TAZEWELL / 129 / 91
	PLOT SCALE =	DRAWN - RAB	REVISED -					CONTRACT NO. 68069
	PLOT DATE =	CHECKED - JAN	REVISED -		SHEET NO. 57 OF 65 SHEETS			ILLINOIS FED. AID PROJECT

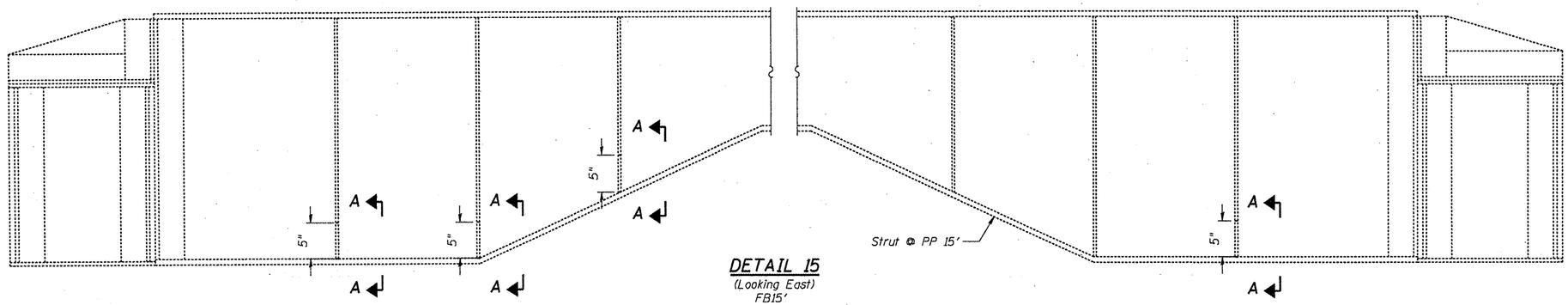

DETAIL 15

(Looking East)
FB15'
S.N.090-0109

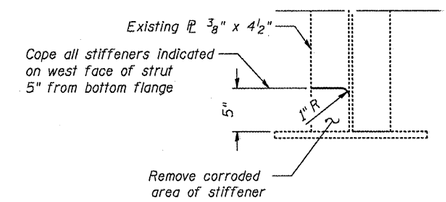

SECTION A-A

Procedure for Repair Detail:

1. Cut existing vertical stiffener ±5" from bottom flange and along web as shown with a 1" R (min.) at web. The minimum distance from cut to face of web shall be the larger of 1/4" or web to plate weld size, with removal of remaining material by grinding as described below. The cut shall be made parallel to the web without angling the cut towards the web. Equipment and method of cutting shall be approved by the Engineer. Any method of removal to be used shall ensure that no damage is done to the existing web, stiffener, or welds connecting these elements. Cutting shall be done in a manner such that the paint on the opposite face of the web is not damaged. If damage occurs, the damaged area shall be repainted at the contractor's expense and procedures shall be modified to prevent damage at subsequent removal locations.

2. Remove material between cut and web by grinding and grind smooth at web surface and cut end of stiffener. Web PL surfaces and cut end of stiffener shall have a roughness average (Ra) of 250 μ in. or less. Grinding equipment shall be approved by the Engineer. The grinding operation should not gouge the girder web PL or bottom flange.

3. The web surface at the modification shall be inspected using dye penetrant or magnetic particle (MT) methods. Any cracks found shall be identified and reported to the Bureau of Bridges and Structures for further disposition.

4. The exposed steel surfaces shall be cleaned and painted using an aluminum epoxy mastic primer according to Article 506.05 of the Standard Specifications.

Stiffener removal shall be included with the cost of STRUCTURAL STEEL REPAIR, which price shall include all materials, equipment, labor, cleaning, testing, and painting.

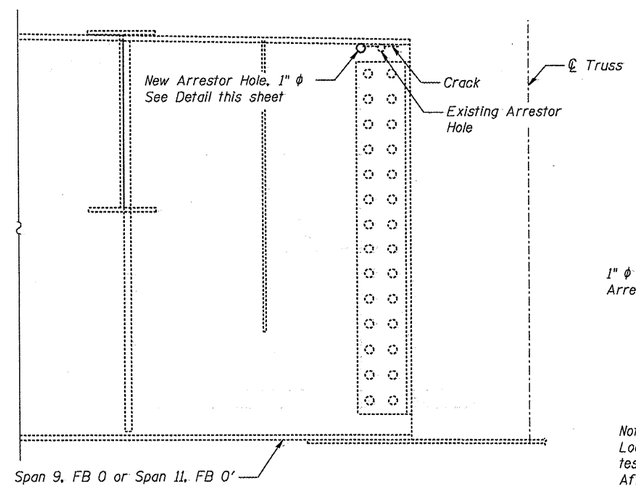

DETAIL 16

(S.N. 090-0109)

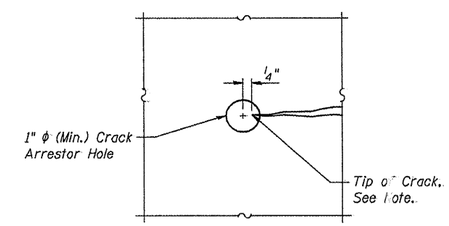

CRACK ARRESTOR HOLE DETAIL

Note:
Locate crack tip using liquid dye penetrant or magnetic particle testing. Drill 1" min. ϕ Crack Arrestor hole at the crack tip. After crack arrestor hole has been drilled, dye penetrant or magnetic particle testing shall be used to verify that the drilled hole has captured the crack tip. Cost included with STRUCTURAL STEEL REPAIR.

FILE NAME =	USER NAME =	DESIGNED - JAN	REVISED -	STATE OF ILLINOIS DEPARTMENT OF TRANSPORTATION	STRUCTURAL STEEL REPAIR DETAILS, SHEET 7 STRUCTURE NO. 090-0108 & 090-0109	F.A.I. RTE. 474	SECTION	COUNTY PEORIA & TAZEWELL	TOTAL SHEETS 129	SHEET NO. 98
		CHECKED - BTO	REVISED -							
	PLOT SCALE =	DRAWN - RAB/BTO	REVISED -							
	PLOT DATE =	CHECKED - JAN	REVISED -		SHEET NO. 58 OF 65 SHEETS			ILLINOIS FED. AID PROJECT	CONTRACT NO. 68069	

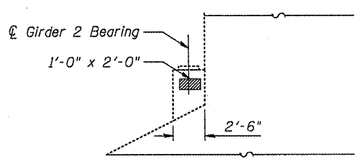

WEST ABUTMENT BEARING PEDESTAL NORTH FACE ELEVATION

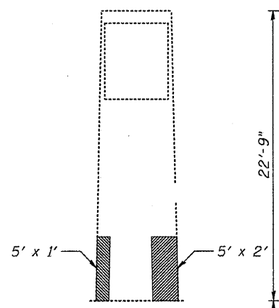

PIER 4- S. COLUMN INSIDE FACE

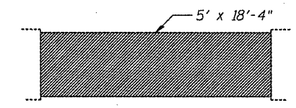

PIER 4 - TIE BEAM UNDERSIDE PLAN

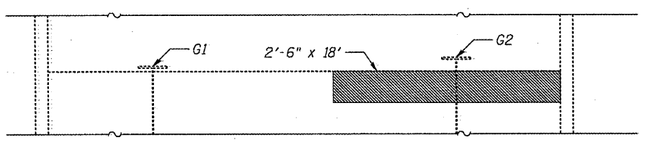

WEST ABUTMENT ELEVATION

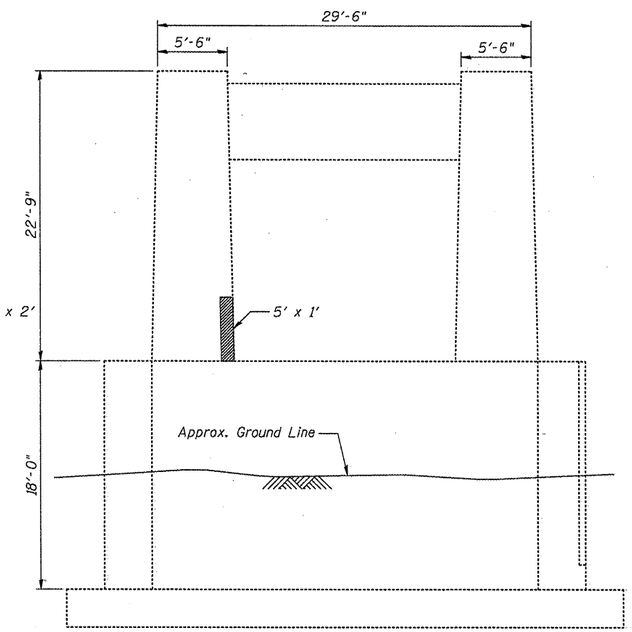

PIER 4 - EAST ELEVATION

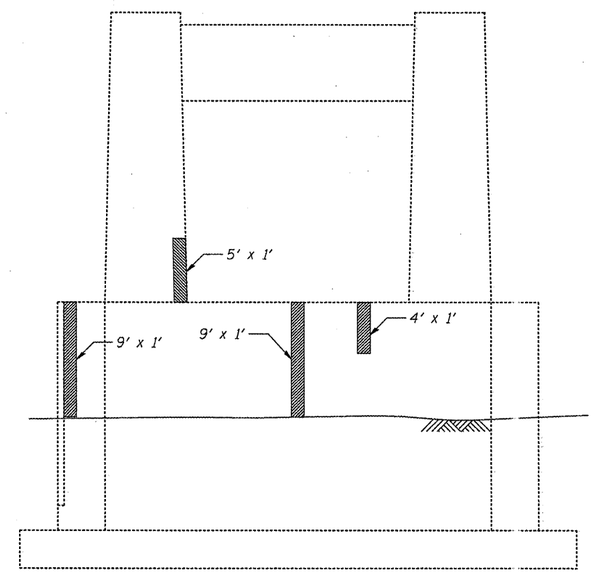

PIER 4 - WEST ELEVATION

Note:
Contractor shall verify limits of unsound concrete shown prior to beginning repair.

BILL OF MATERIAL

ITEM	UNIT	QUANTITY
Structural Repair of Concrete (Depth Equal To or Less Than 5")	Sq. Ft.	186

FILE NAME =	USER NAME =	DESIGNED - RAB	REVISED -	STATE OF ILLINOIS DEPARTMENT OF TRANSPORTATION	WEST ABUTMENT & PIER 4 SUBSTRUCTURE REPAIR, WB STRUCTURE NO. 090-0109	F.A.I. RTE.	SECTION	COUNTY	TOTAL SHEETS	SHEET NO.
		CHECKED - BTO	REVISED -			474		PEORIA & TAZEWELL	129	93
	PLOT SCALE =	DRAWN - RAB	REVISED -					CONTRACT NO. 68069		
	PLOT DATE =	CHECKED - BTO	REVISED -		SHEET NO. 59 OF 65 SHEETS		ILLINOIS	FED. AID PROJECT		

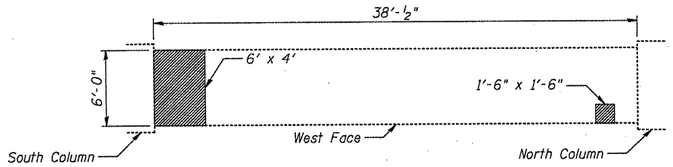

PIER 9-TIE BEAM UNDERSIDE PLAN

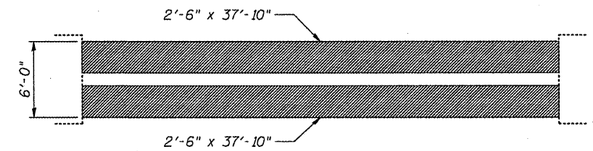

PIER 8-TIE BEAM UNDERSIDE PLAN

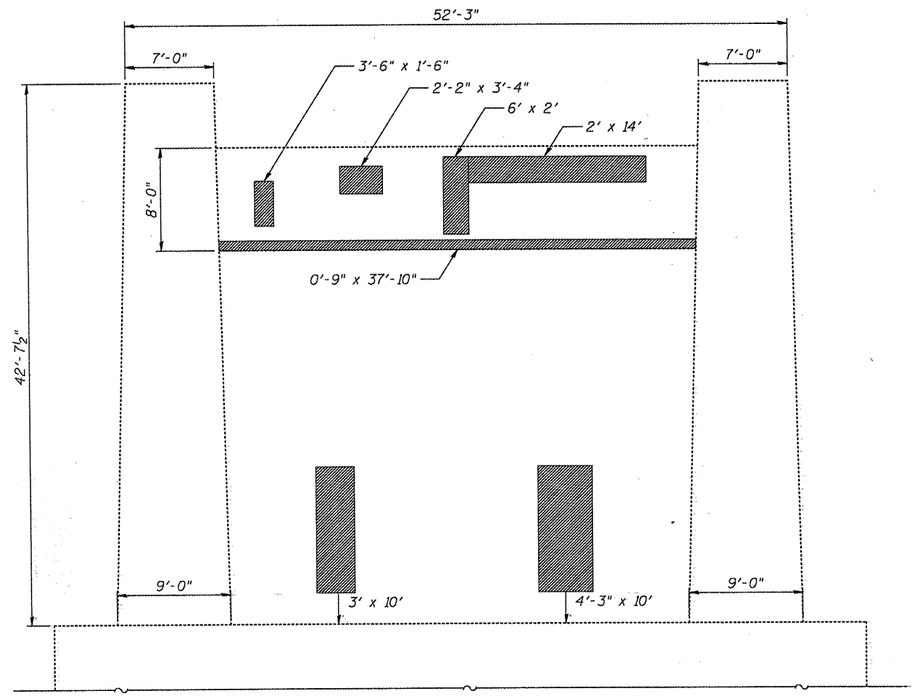

PIER 8 - EAST ELEVATION

(Dimensions taken from existing drawings)

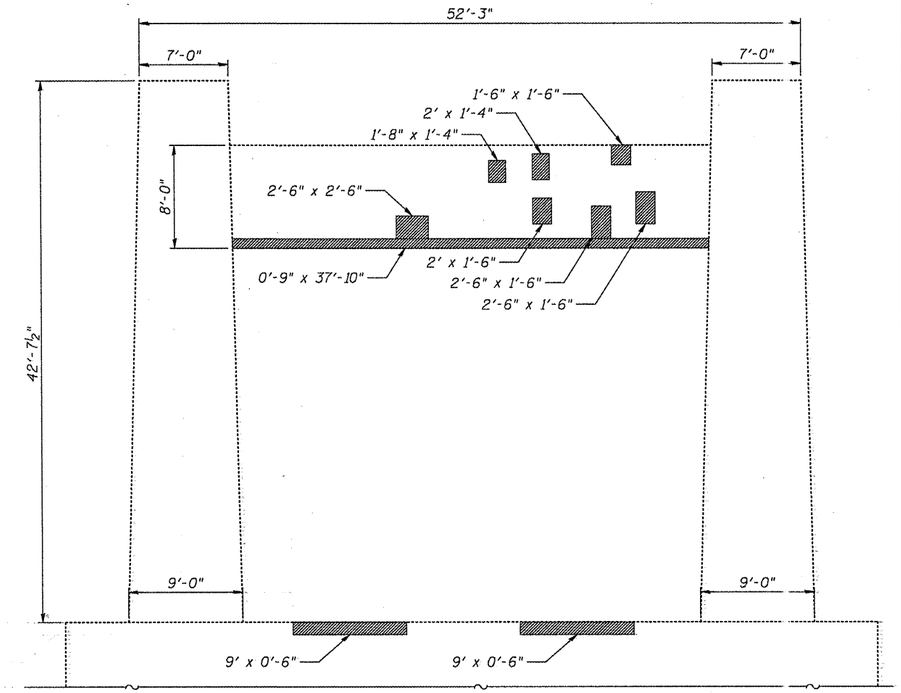

PIER 8 - WEST ELEVATION

(Dimensions taken from existing drawings)

Note:
Contractor shall verify limits of unsound concrete shown prior to beginning repair.

BILL OF MATERIAL

ITEM	UNIT	QUANTITY
Structural Repair of Concrete (Depth Equal To or Less Than 5")	Sq. Ft.	430

FILE NAME =	USER NAME =	DESIGNED - RAB	REVISED -
		CHECKED - BTO	REVISED -
	PLOT SCALE =	DRAWN - RAB	REVISED -
	PLOT DATE =	CHECKED - BTO	REVISED -

STATE OF ILLINOIS
DEPARTMENT OF TRANSPORTATION

PIER 8 & 9 SUBSTRUCTURE REPAIR, WB
STRUCTURE NO. 090-0109

SHEET NO. 60 OF 65 SHEETS

F.A.I. RTE.	SECTION	COUNTY	TOTAL SHEETS	SHEET NO.
474		PEORIA & TAZEWELL	129	93A
		CONTRACT NO. 68069		
		ILLINOIS FED. AID PROJECT		

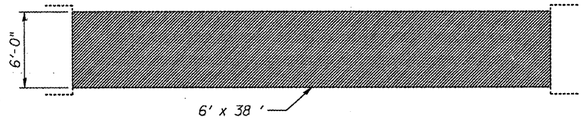

PIER 11 - TIE BEAM UNDERSIDE PLAN

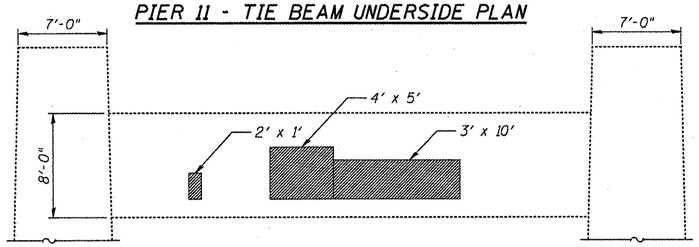

PIER 11 - WEST FACE TIE BEAM ELEVATION

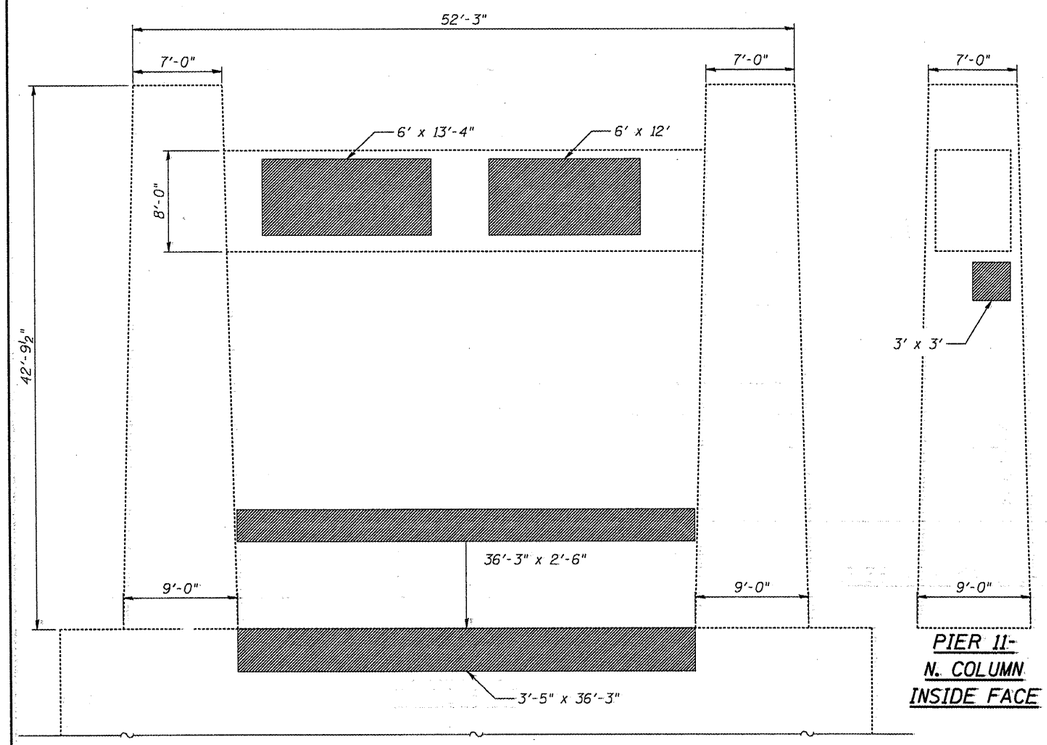

PIER 11 - EAST ELEVATION

(Dimensions taken from existing drawings)

PIER 11-
N. COLUMN
INSIDE FACE

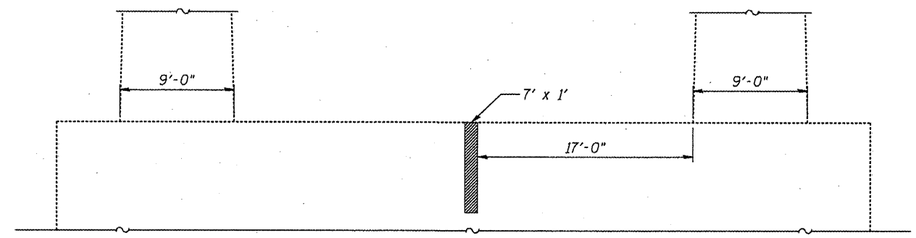

PIER 10 - WALL WEST ELEVATION

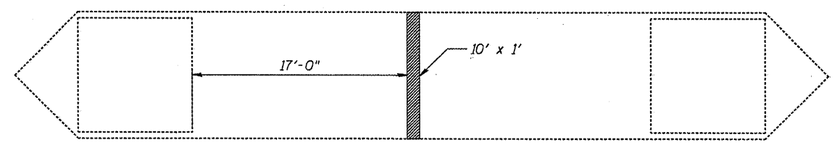

PIER 10 - WALL TOP PLAN

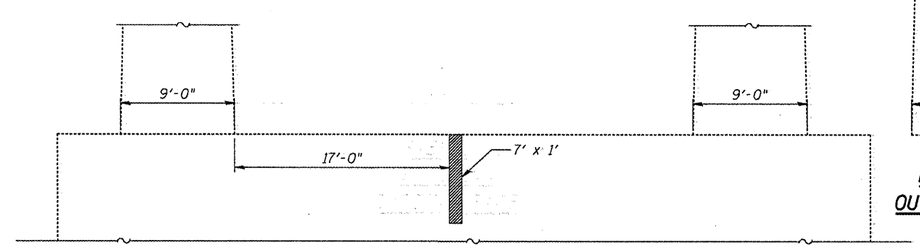

PIER 10 - WALL EAST ELEVATION

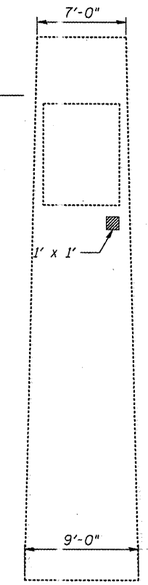

PIER 10-
N. COLUMN
OUTSIDE FACE

Note:
Contractor shall verify limits of unsound concrete shown prior to beginning repair.

BILL OF MATERIAL

ITEM	UNIT	QUANTITY
Structural Repair of Concrete (Depth Equal To or Less Than 5")	Sq. Ft.	682

FILE NAME =	USER NAME =	DESIGNED - RAB	REVISED -
		CHECKED - BTO	REVISED -
	PLOT SCALE =	DRAWN - RAB	REVISED -
	PLOT DATE =	CHECKED - BTO	REVISED -

STATE OF ILLINOIS
DEPARTMENT OF TRANSPORTATION

PIER 10 & 11 SUBSTRUCTURE REPAIR, WB
STRUCTURE NO. 090-0109
SHEET NO. 61 OF 65 SHEETS

F.A.I. RTE.	SECTION	COUNTY	TOTAL SHEETS	SHEET NO.
474		PEORIA & TAZEWELL	129	93B
		CONTRACT NO. 68069		
		ILLINOIS FED. AID PROJECT		

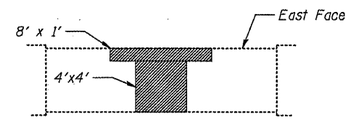

TIE BEAM UNDERSIDE PLAN

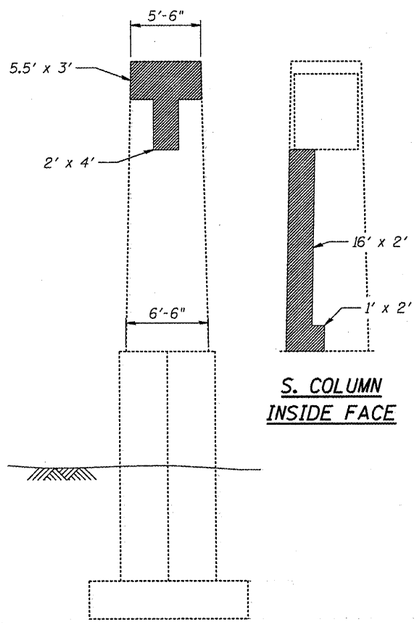

S. COLUMN INSIDE FACE

PIER 4 -SOUTH ELEVATION

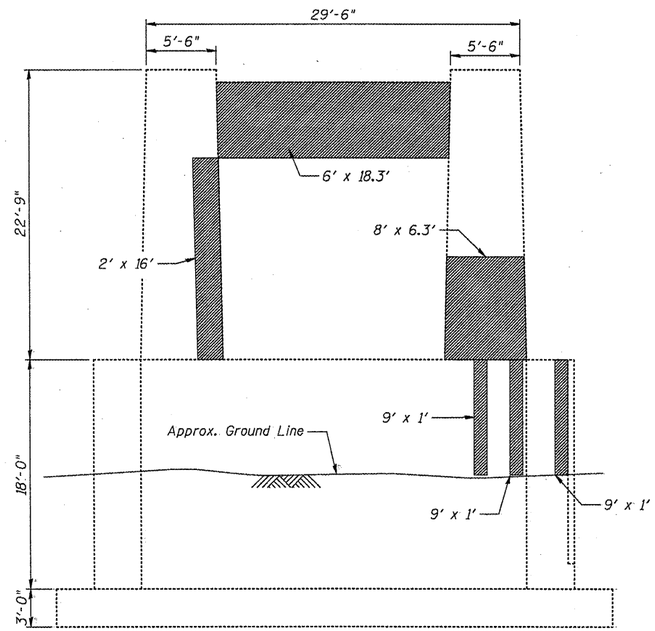

PIER 4 - EAST ELEVATION

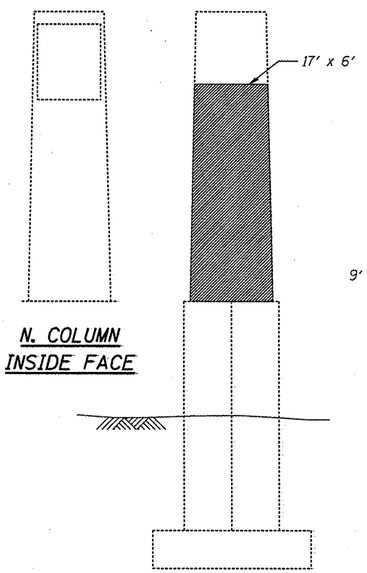

N. COLUMN INSIDE FACE

PIER 4 -NORTH ELEVATION

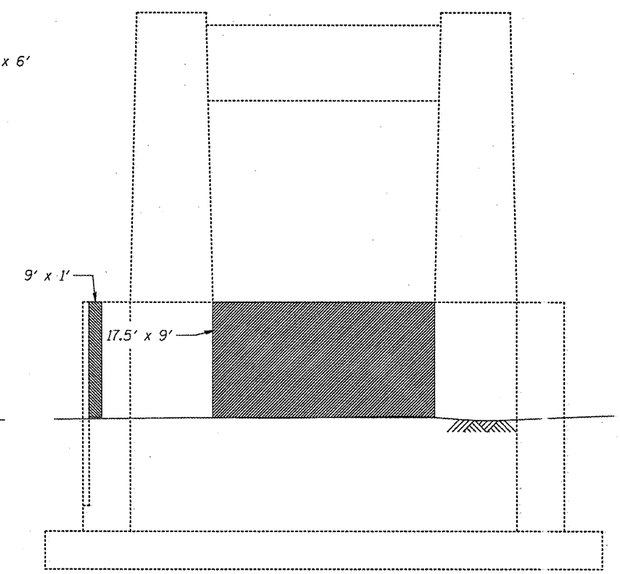

PIER 4 - WEST ELEVATION

LEGEND

Structural Repair of Concrete (Depth less than 5") (Typ. all piers)

Note:
Contractor shall verify limits of unsound concrete shown prior to beginning repair.

BILL OF MATERIAL

ITEM	UNIT	QUANTITY
Structural Repair of Concrete (Depth Equal To or Less Than 5")	Sq. Ft.	570

FILE NAME =	USER NAME =	DESIGNED - BTO	REVISED -
		CHECKED - RAB	REVISED -
	PLOT SCALE =	DRAWN - BTO	REVISED -
	PLOT DATE =	CHECKED - RAB	REVISED -

STATE OF ILLINOIS
DEPARTMENT OF TRANSPORTATION

PIER 4 SUBSTRUCTURE REPAIR, EB
STRUCTURE NO. 090-0108

SHEET NO. 62 OF 65 SHEETS

F.A.I. RTE.	SECTION	COUNTY	TOTAL SHEETS	SHEET NO.
474		PEORIA & TAZEWELL	129	93C
		CONTRACT NO. 68069		
		ILLINOIS FED. AID PROJECT		

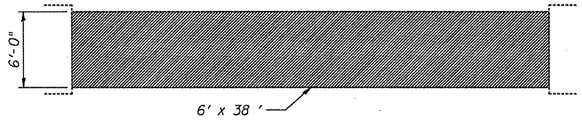

TIE BEAM UNDERSIDE PLAN

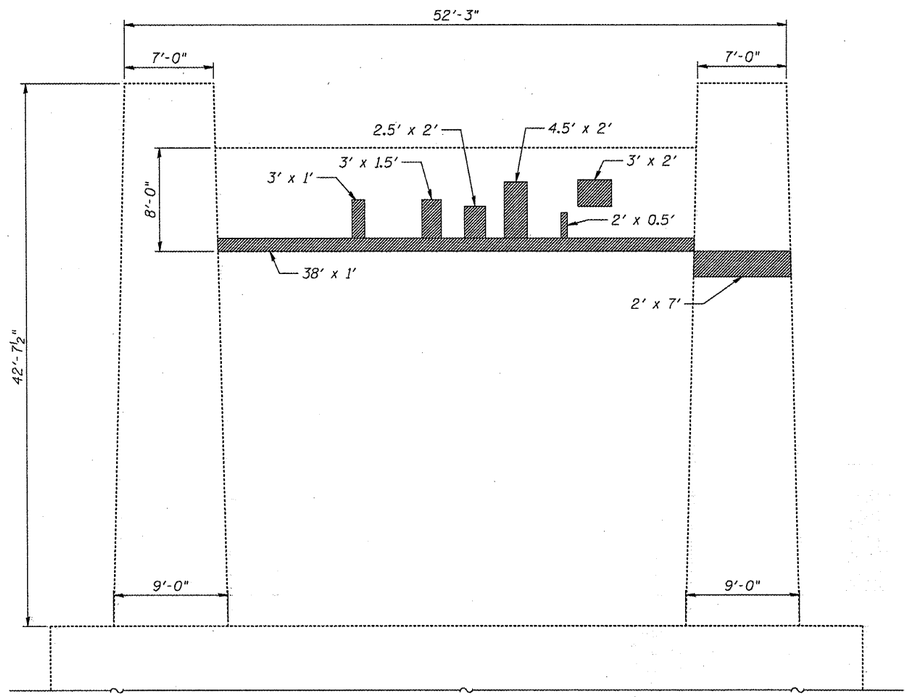

PIER 8 - EAST ELEVATION

(Dimensions taken from existing drawings)

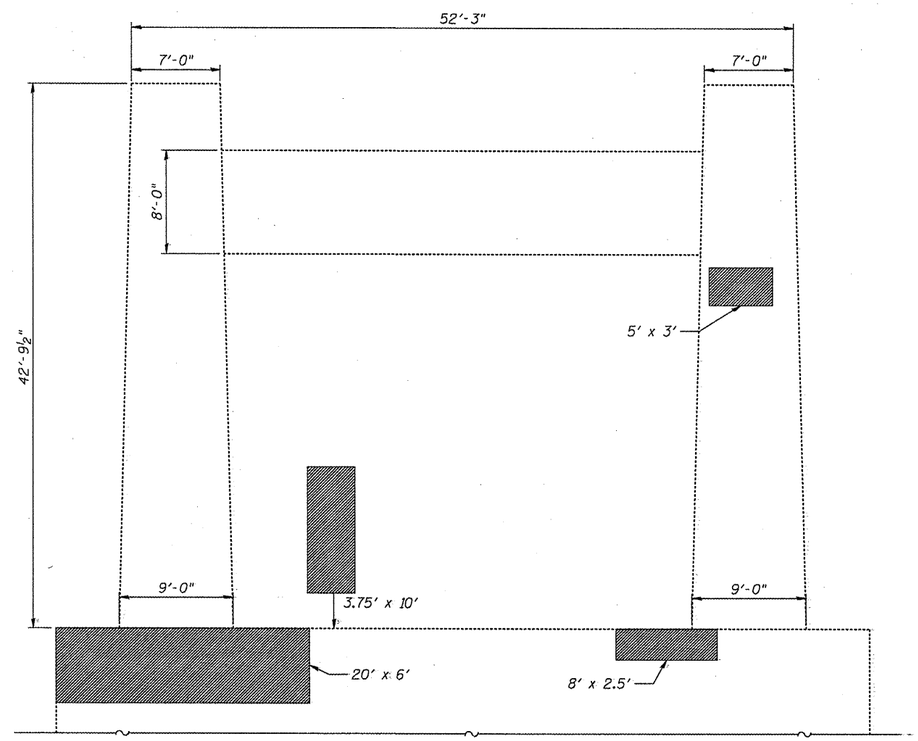

PIER 9 - WEST ELEVATION

(Dimensions taken from existing drawings)

Note:
Contractor shall verify limits of unsound concrete shown prior to beginning repair.

BILL OF MATERIAL

ITEM	UNIT	QUANTITY
Structural Repair of Concrete (Depth Equal To or Less Than 5")	Sq. Ft.	501

FILE NAME =	USER NAME =	DESIGNED - BTO	REVISED -
		CHECKED - RAB	REVISED -
	PLOT SCALE =	DRAWN - BTO	REVISED -
	PLOT DATE =	CHECKED - RAB	REVISED -

STATE OF ILLINOIS
DEPARTMENT OF TRANSPORTATION

PIER 8 & PIER 9 SUBSTRUCTURE REPAIR; EB
STRUCTURE NO. 090-0108

SHEET NO. 63 OF 65 SHEETS

F.A.I. RTE.	SECTION	COUNTY	TOTAL SHEETS	SHEET NO.
474		PEORIA & TAZEWELL	129	93D
		CONTRACT NO. 68069		
		ILLINOIS FED. AID PROJECT		

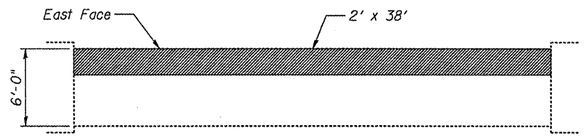

TIE BEAM UNDERSIDE PLAN

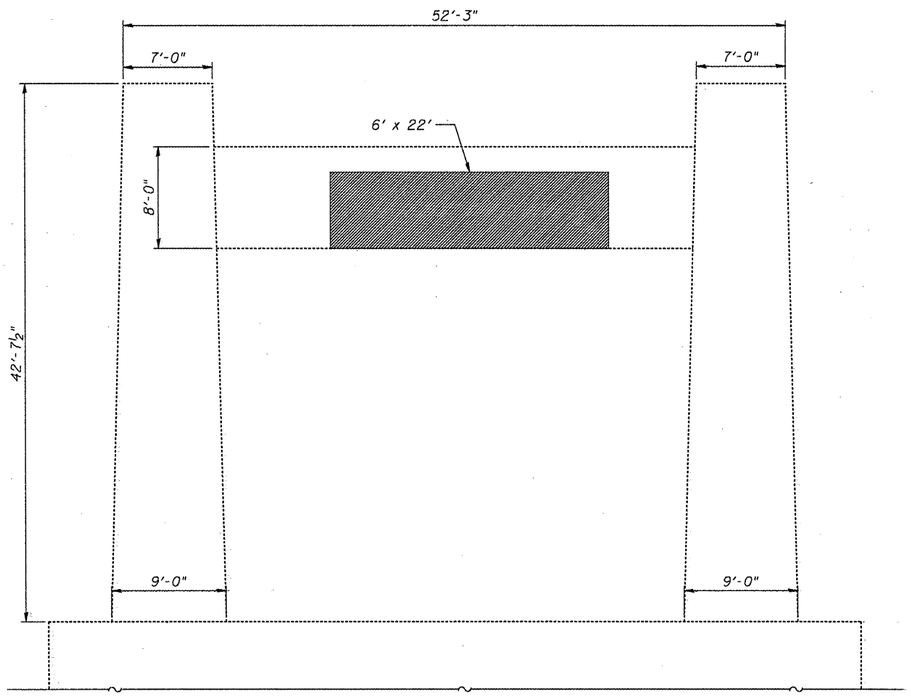

PIER 11 - EAST ELEVATION

(Dimensions taken from existing drawings)

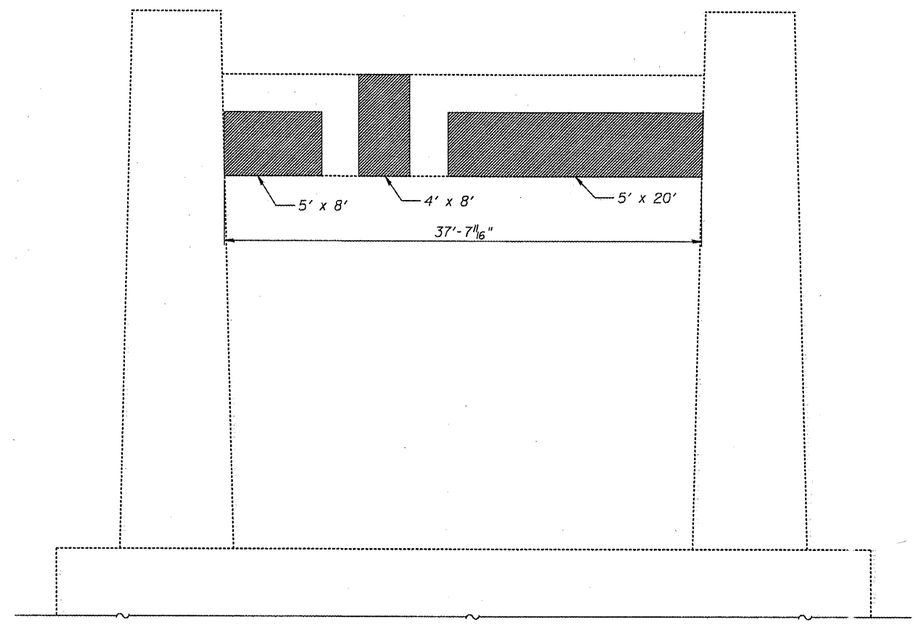

PIER 11 - WEST ELEVATION

(Dimensions taken from existing drawings)

Note:
Contractor shall verify limits of unsound concrete shown prior to beginning repair.

BILL OF MATERIAL

ITEM	UNIT	QUANTITY
Structural Repair of Concrete (Depth Equal To or Less Than 5")	Sq. Ft.	380

FILE NAME =	USER NAME =	DESIGNED - BTO	REVISED -	STATE OF ILLINOIS DEPARTMENT OF TRANSPORTATION	PIER 11 SUBSTRUCTURE REPAIR, EB STRUCTURE NO. 090-0108	F.A.I. RTE.	SECTION	COUNTY	TOTAL SHEETS / SHEET NO.
		CHECKED - RAB	REVISED -			474		PEORIA & TAZEWELL	129 / 136
	PLOT SCALE =	DRAWN - BTO	REVISED -					CONTRACT NO. 68069	
	PLOT DATE =	CHECKED - RAB	REVISED -		SHEET NO. 64 OF 65 SHEETS		ILLINOIS	FED. AID PROJECT	

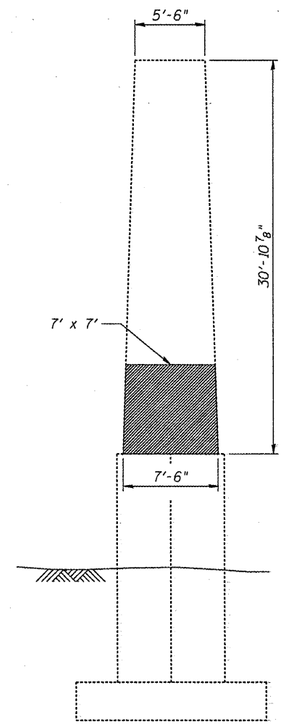

PIER 14 -NORTH ELEVATION

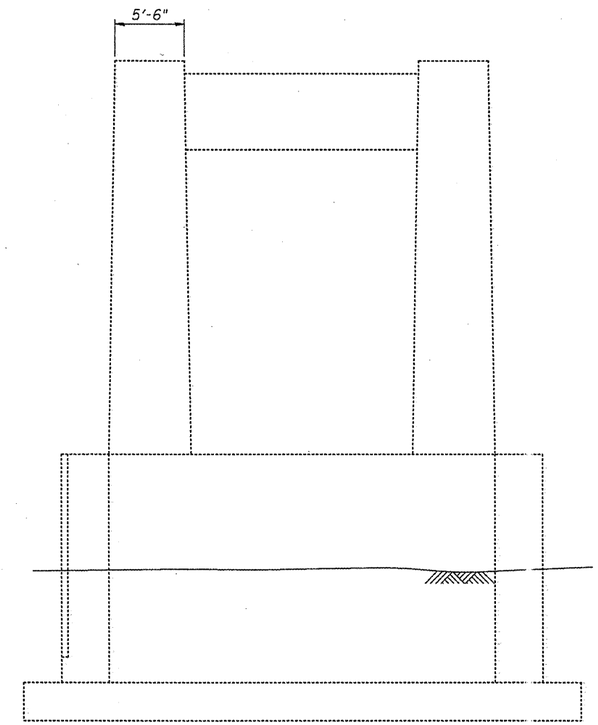

PIER 14 - WEST ELEVATION

Note:
Contractor shall verify limits of unsound concrete shown prior to beginning repair.

BILL OF MATERIAL

ITEM	UNIT	QUANTITY
Structural Repair of Concrete (Depth Equal To or Less Than 5")	Sq. Ft.	49

FILE NAME =	USER NAME =	DESIGNED - BTO	REVISED -	STATE OF ILLINOIS DEPARTMENT OF TRANSPORTATION	PIER 14 SUBSTRUCTURE REPAIR, EB STRUCTURE NO. 090-0108	F.A.I. RTE. 474	SECTION	COUNTY PEORIA & TAZEWELL	TOTAL SHEETS 129 / SHEET NO. 93F
		CHECKED - RAB	REVISED -						
	PLOT SCALE =	DRAWN - BTO	REVISED -						
	PLOT DATE =	CHECKED - RAB	REVISED -		SHEET NO. 65 OF 65 SHEETS		ILLINOIS FED. AID PROJECT	CONTRACT NO. 68069	

SCHEDULE OF QUANTITIES

ITEM DESCRIPTION	UNIT	TOTAL QTY.
CONDUIT IN TRENCH, 2" DIA., PVC	FOOT	4020.0
CONDUIT PUSHED, 2" DIA., PVC	FOOT	300.0
CONDUIT ATTACHED TO STRUCTURE, 1" DIA., GALVANIZED STEEL	FOOT	235.0
CONDUIT ATTACHED TO STRUCTURE, 1 1/4" DIA., GALVANIZED STEEL	FOOT	240.0
CONDUIT ATTACHED TO STRUCTURE, 2" DIA., GALVANIZED STEEL	FOOT	5115.0
JUNCTION BOX, STAINLESS STEEL, ATTACHED TO STRUCTURE, 24" X 24" X 10'	EACH	12.0
UNIT DUCT, 600V, 2-1C NO.4, 1/C NO.6 GROUND, (XLP-TYPE USE)	FOOT	1615.0
ELECTRIC CABLE IN CONDUIT, 600V (XLP-TYPE USE) 1/C NO. 8	FOOT	3270.0
ELECTRIC CABLE IN CONDUIT, 600V (XLP-TYPE USE) 1/C NO. 6	FOOT	4634.0
ELECTRIC CABLE IN CONDUIT, 600V (XLP-TYPE USE) 1/C NO. 4	FOOT	3348.0
TRENCH AND BACKFILL FOR ELECTRICAL WORK	FOOT	3900.0
FIBER OPTIC CABLE IN CONDUIT, NO. 62.5/125, 12F	FOOT	4802.0
CONCRETE FOUNDATION, TYPE E 24-INCH DIAMETER (SPECIAL)	FOOT	10.0
CONCRETE FOUNDATION, TYPE E 36 INCH DIAMETER	FOOT	35.0
DRILL EXISTING HANDHOLE	EACH	3.0
TRAFFIC COUNTER	EACH	2.0
CONCRETE FOUNDATION, TYPE 1	FOOT	7.0
CAMERA POLE, 45 FT	EACH	1.0
CABINET, MODEL 334	EACH	2.0
POLE MOUNTED EQUIPMENT CABINET, TYPE B	EACH	7.0
ETHERNET SWITCH (MATERIAL ONLY)	EACH	18.0
TRAFFIC SIGNAL POST, SPECIAL	EACH	2.0
CAT 5 ETHERNET CABLE	FOOT	747.0
CLOSED-CIRCUIT TELEVISION DOME CAMERA, IP BASED	EACH	9.0
CLOSED-CIRCUIT TELEVISION DOME CAMERA, IP BASED (MATERIAL ONLY)	EACH	2.0
CAMERA POLE, 55 FT	EACH	1.0
ELECTRIC SERVICE INSTALLATION, SPECIAL	EACH	1.0
FIBER OPTIC CABLE 48 FIBERS, SINGLE MODE	EACH	5254.0
FIBER OPTIC ETHERNET DROP AND REPEAT SWITCH	EACH	4.0
COMMUNICATIONS VAULT	EACH	4.0

LEGEND

- PROP. SERVICE INSTALLATION
- PROP. CCTV CABINET
- PROP. TYPE 334 ITS CABINET
- PROP. CCTV DOME CAMERA
- PROP. CAMERA POLE
- PROP. CONDUIT, TRENCHED
- PROP. CONDUIT, PUSHED
- PROP. CONDUIT, ATTACHED TO STRUCTURE
- PROP. JUNCTION BOX, SS, ATS
- PROP. COMMUNICATIONS VAULT
- PROP. TRAFFIC COUNTER

FIBER OPTIC CABLE SLACK

DOUBLE HANDHOLE: 30.0 FT.
COMMUNICATIONS VAULT: 30.0 FT
JUNCTION BOX: 10.0 FT.
HANDHOLE: 10.0 FT.
ITS OR SIGNAL CABINET: 10.0 FT.
EQUIPMENT CABINET: 3.0 FT

CONSTRUCTION NOTES

1. THE LOCATION OF ALL UTILITIES AND PRIVATELY OWNED FACILITIES SHALL BE FIELD VERIFIED BY THE CONTRACTOR PRIOR TO THE INSTALLATION OF ANY COMPONENTS.
2. THE CONTRACTOR SHALL BE RESPONSIBLE FOR LOCATING EXISTING IDOT ELECTRICAL FACILITIES AT HIS/HER OWN EXPENSE IF REQUIRED. THE CONTRACTOR SHALL ALSO BE LIABLE FOR ANY DAMAGE TO IDOT FACILITIES RESULTING FROM INACCURATE LOCATING.
3. ELECTRICAL WORK SHALL CONFORM WITH NATIONAL, STATE, AND LOCAL CODES.
4. THE CONTRACTOR SHALL PROVIDE ELECTRICAL CABLE SLACK IN ACCORDANCE WITH ARTICLE 873.03 UNLESS SPECIFIED OTHERWISE.
5. ELECTRICAL CABLE WILL BE MEASURED FOR PAYMENT IN ACCORDANCE WITH ARTICLE 873.04.
6. ALL SURPLUS MATERIALS SHALL BE DISPOSED OF IN ACCORDANCE WITH ARTICLE 202.03 OF THE STANDARD SPECIFICATION.
7. THE LOCATIONS FOR CAMERA POLES AND CCTV CAMERAS ARE PROVIDED FOR REFERENCE ONLY. THE ENGINEER OF TRAFFIC SHALL BE NOTIFIED FOR LOCATION VERIFICATION BEFORE INSTALLATION.
8. THE COMMUNICATION VAULT SHALL BE INSTALLED SO THAT THE TOP OF THE FRAME WILL BE FLUSH WITH THE SURFACE OF THE MEDIAN, SIDEWALK, OR GROUND LINE.
9. COILABLE POLYETHYLENE DUCT MAY BE SUBSTITUTED FOR PVC PUSHED OR TRENCHED.
10. THE CONTRACTOR MAY ELECT TO PUSH A CONDUIT THAT IS SHOWN TO BE TRENCHED ON THE PLANS. HOWEVER, THIS WORK WILL BE MEASURED FOR PAYMENT AND PAID FOR AS CONDUIT IN TRENCH OF THE TYPE AND SIZE SPECIFIED AND TRENCH AND BACKFILL FOR ELECTRICAL WORK.
11. POTHOLING TO LOCATE EXISTING UNDERGROUND UTILITIES SHALL BE INCLUDED IN THE CONTRACT BID PRICE FOR THE CONDUIT PAY ITEMS (PUSHED OR TRENCHED).
12. NO ADDITIONAL COMPENSATION SHALL BE ALLOWED FOR PLACING CONDUIT AT GREATER THAN 2 FT. MINIMUM DEPTH TO AVOID OBSTACLES SUCH AS UNDERGROUND UTILITIES.
13. THE CONTRACTOR IS RESPONSIBLE FOR THE COST OF UNCOVERING OR HAND DIGGING AROUND UTILITIES AS NECESSARY. THIS COST OF THIS WORK SHALL BE INCLUDED IN THE UNIT PRICES FOR THE CONDUITS.
14. THE CONTRACTOR SHALL INSTALL A #12 (EPR-TYPE RHW) TRACER WIRE ALONG WITH THE FIBER OPTIC CABLE IN ALL UNDERGROUND CONDUIT. THE TRACER WIRE SHALL BE CONTINUOUS AND BE ACCESSIBLE FROM THE HANDHOLES. THE COST OF FURNISHING AND INSTALLING THE TRACER WIRE SHALL BE INCLUDED IN THE UNIT BID PRICE FOR THE FIBER OPTIC CABLE IN CONDUIT PAY ITEM. ONLY ONE TRACER WIRE IS REQUIRED PER CONDUIT.
15. THE CONTRACTOR SHALL FURNISH AND INSTALL ALL ITEMS REQUIRED TO ATTACH THE CONDUITS, JUNCTION BOXES, CONTROLLER CABINETS, AND CAMERAS TO THE STRUCTURE, INCLUDING, BUT NOT LIMITED TO UNI-STRUT, BRACKETS, SEAL-TITE, LBS, FITTINGS, HARDWARE, AND OTHER MISCELLANEOUS ITEMS. THESE ITEMS WILL NOT BE PAID FOR SEPARATELY, BUT SHALL BE INCLUDED IN THE BID PRICE FOR THEIR ASSOCIATED PAY ITEMS.
16. THE CONTRACTOR SHALL SUBMIT A COMPLETE PACKAGE (INCLUDING CONDUIT BRACKETS, HARDWARE, ATTACHMENT POINTS, ATTACHMENT METHODS, ETC.) TO THE DEPARTMENT FOR REVIEW AND SUBSEQUENT APPROVAL PRIOR TO COMMENCING WORK.
17. THE CONTRACTOR SHALL FURNISH AND INSTALL EXPANSION/DEFLECTION COUPLINGS (OR OTHER EQUIPMENT AND METHODS AS APPROVED BY THE ENGINEER) FOR ALL BRIDGE JOINTS AS REQUIRED AND DIRECTED BY THE ENGINEER.
18. ALL SEAL-TITE CONDUIT SHALL BE NON-METALLIC AND SHALL INCLUDE CONNECTORS WITH INTEGRAL STAINLESS STEEL KELLUM GRIPS AT THE ENDS FOR INCREASED STRENGTH AND DURABILITY.
19. THE CONTRACTOR SHALL GROUND ALL EXPOSED STEEL CONDUITS IN ACCORDANCE WITH NEC REQUIREMENTS. THE CONTRACTOR SHALL MAINTAIN THE CONTINUITY OF THE GROUND SYSTEM WHEN USING NON-METALLIC SEAL-TITE CONDUIT BY INSTALLING A #6 GROUNDING CONDUCTOR INSIDE THE SEAL-TITE AND BONDING THIS WIRE TO THE GALVANIZED STEEL CONDUITS AT EACH END. THE COST OF THIS WORK SHALL BE INCLUDED IN THE UNIT BID PRICE FOR THE GALVANIZED STEEL CONDUIT PAY ITEMS.
20. ALL BRACKETS SHALL BE FULLY GALVANIZED AND ALL HARDWARE SHALL BE EITHER GALVANIZED OR STAINLESS STEEL.
21. THE CONTRACTOR SHALL INSTALL THREAD LOCKER ON ALL THREADED CONNECTIONS TO PREVENT LOOSENING THROUGH VIBRATION.
22. THE PROPOSED ELECTRICAL CABLE AND ALL SPLICES SHALL BE IN ACCORDANCE WITH ARTICLE 1066 OF THE STANDARD SPECIFICATIONS.
23. THE CONTRACTOR SHALL CLEAR AWAY ALL DEBRIS (PLANTS, LOGS, FALLEN TREES, ETC.) REQUIRED FOR CONDUIT TRENCHING OPERATIONS. THIS WORK SHALL BE INCLUDED IN THE COST OF CONDUIT PAY ITEM.

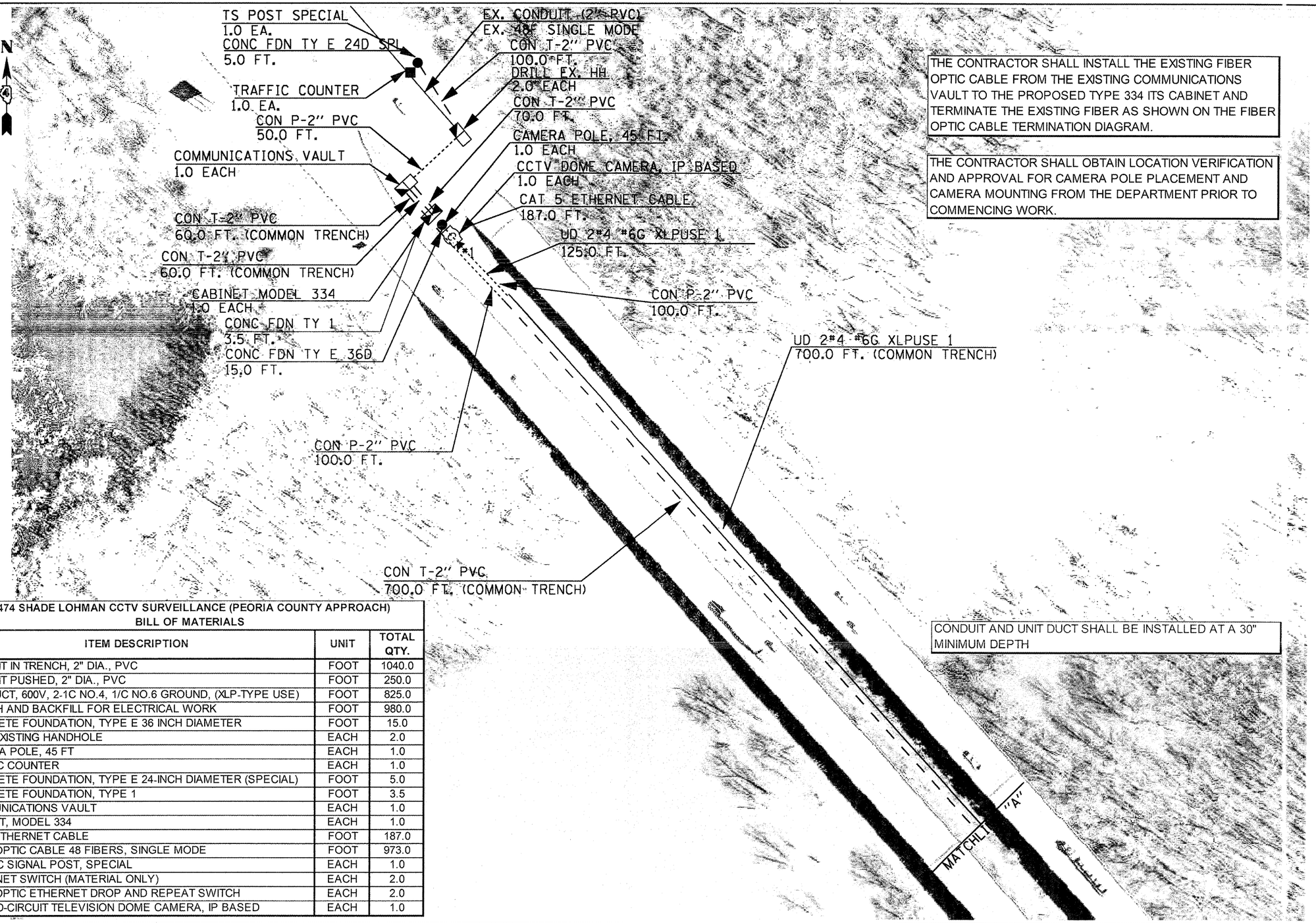

THE CONTRACTOR SHALL INSTALL THE EXISTING FIBER OPTIC CABLE FROM THE EXISTING COMMUNICATIONS VAULT TO THE PROPOSED TYPE 334 ITS CABINET AND TERMINATE THE EXISTING FIBER AS SHOWN ON THE FIBER OPTIC CABLE TERMINATION DIAGRAM.

THE CONTRACTOR SHALL OBTAIN LOCATION VERIFICATION AND APPROVAL FOR CAMERA POLE PLACEMENT AND CAMERA MOUNTING FROM THE DEPARTMENT PRIOR TO COMMENCING WORK.

CONDUIT AND UNIT DUCT SHALL BE INSTALLED AT A 30" MINIMUM DEPTH

I-474 SHADE LOHMAN CCTV SURVEILLANCE (PEORIA COUNTY APPROACH)
BILL OF MATERIALS

ITEM DESCRIPTION	UNIT	TOTAL QTY.
CONDUIT IN TRENCH, 2" DIA., PVC	FOOT	1040.0
CONDUIT PUSHED, 2" DIA., PVC	FOOT	250.0
UNIT DUCT, 600V, 2-1C NO.4, 1/C NO.6 GROUND, (XLP-TYPE USE)	FOOT	825.0
TRENCH AND BACKFILL FOR ELECTRICAL WORK	FOOT	980.0
CONCRETE FOUNDATION, TYPE E 36 INCH DIAMETER	FOOT	15.0
DRILL EXISTING HANDHOLE	EACH	2.0
CAMERA POLE, 45 FT	EACH	1.0
TRAFFIC COUNTER	EACH	1.0
CONCRETE FOUNDATION, TYPE E 24-INCH DIAMETER (SPECIAL)	FOOT	5.0
CONCRETE FOUNDATION, TYPE 1	FOOT	3.5
COMMUNICATIONS VAULT	EACH	1.0
CABINET, MODEL 334	EACH	1.0
CAT 5 ETHERNET CABLE	FOOT	187.0
FIBER OPTIC CABLE 48 FIBERS, SINGLE MODE	FOOT	973.0
TRAFFIC SIGNAL POST, SPECIAL	EACH	1.0
ETHERNET SWITCH (MATERIAL ONLY)	EACH	2.0
FIBER OPTIC ETHERNET DROP AND REPEAT SWITCH	EACH	2.0
CLOSED-CIRCUIT TELEVISION DOME CAMERA, IP BASED	EACH	1.0

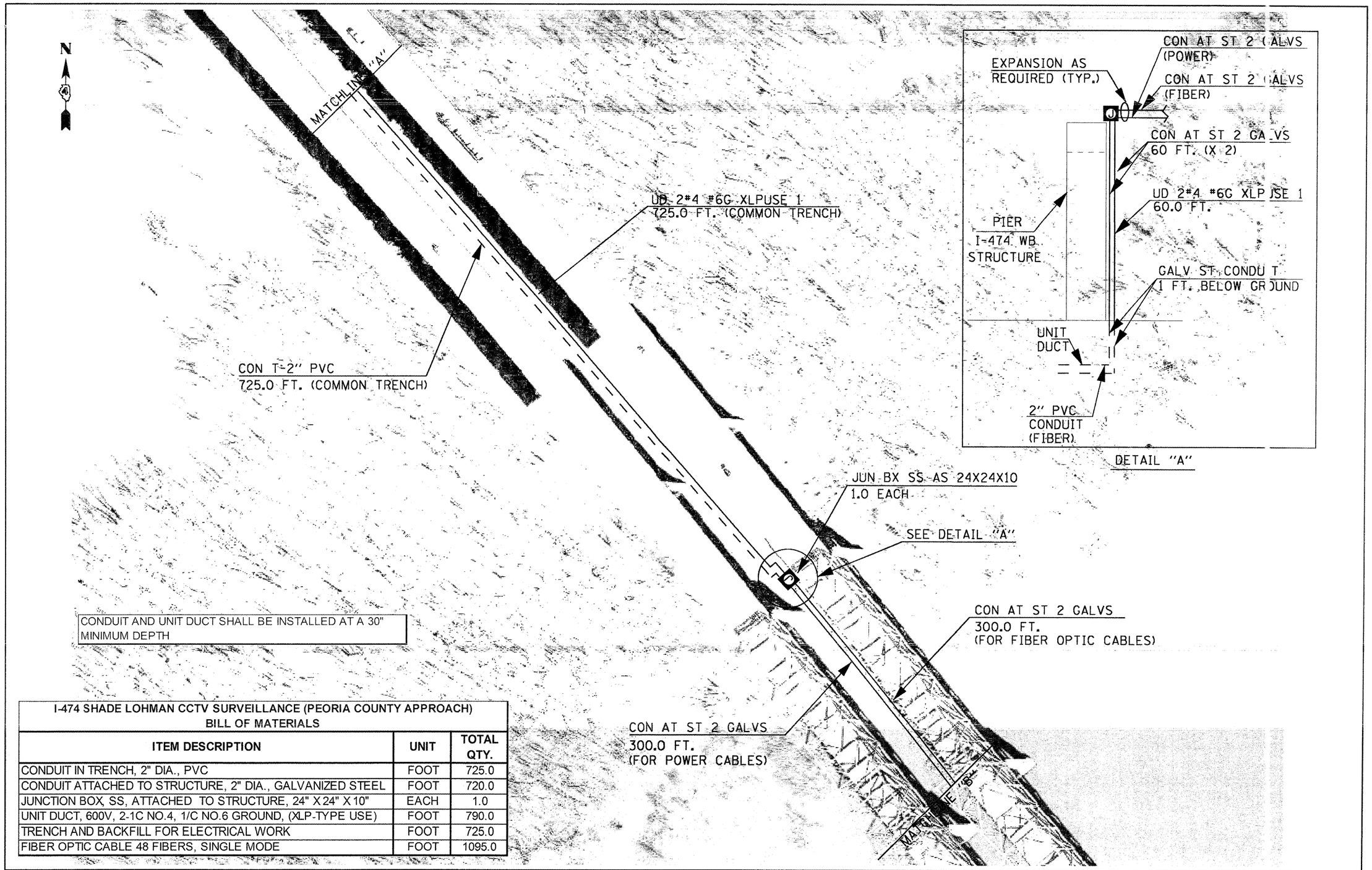

CONDUIT AND UNIT DUCT SHALL BE INSTALLED AT A 30" MINIMUM DEPTH

I-474 SHADE LOHMAN CCTV SURVEILLANCE (PEORIA COUNTY APPROACH)
BILL OF MATERIALS

ITEM DESCRIPTION	UNIT	TOTAL QTY.
CONDUIT IN TRENCH, 2" DIA., PVC	FOOT	725.0
CONDUIT ATTACHED TO STRUCTURE, 2" DIA., GALVANIZED STEEL	FOOT	720.0
JUNCTION BOX, SS, ATTACHED TO STRUCTURE, 24" X 24" X 10"	EACH	1.0
UNIT DUCT, 600V, 2-1C NO.4, 1/C NO.6 GROUND, (XLP-TYPE USE)	FOOT	790.0
TRENCH AND BACKFILL FOR ELECTRICAL WORK	FOOT	725.0
FIBER OPTIC CABLE 48 FIBERS, SINGLE MODE	FOOT	1095.0

FILE NAME = 68069 - I-474 Shade Lohmann Bridge CCTV	USER NAME = howalder	DESIGNED - ___	REVISED - ___
	Surveillance - Final 2-7-11.dgn	DRAWN - ___	REVISED - ___
	PLOT SCALE = 100.000 ' / IN.	CHECKED - ___	REVISED - ___
	PLOT DATE = 2/7/2011	DATE - _____	REVISED - ___

STATE OF ILLINOIS
DEPARTMENT OF TRANSPORTATION

I-474 SHADE LOHMANN BRIDGE
CCTV CAMERA SURVEILLANCE – PEORIA COUNTY APPROACH

SCALE: _____ | ITS SHEET NO. 3 OF 16 SHEETS | STA. _____ TO STA. _____

F.A.I RTE.	SECTION	COUNTY	TOTAL SHEETS	SHEET NO.
474	(172,90)5B)1-2	PEORIA/TAZEWELL	127	96

CONTRACT NO. 68069
ILLINOIS FED. AID PROJECT

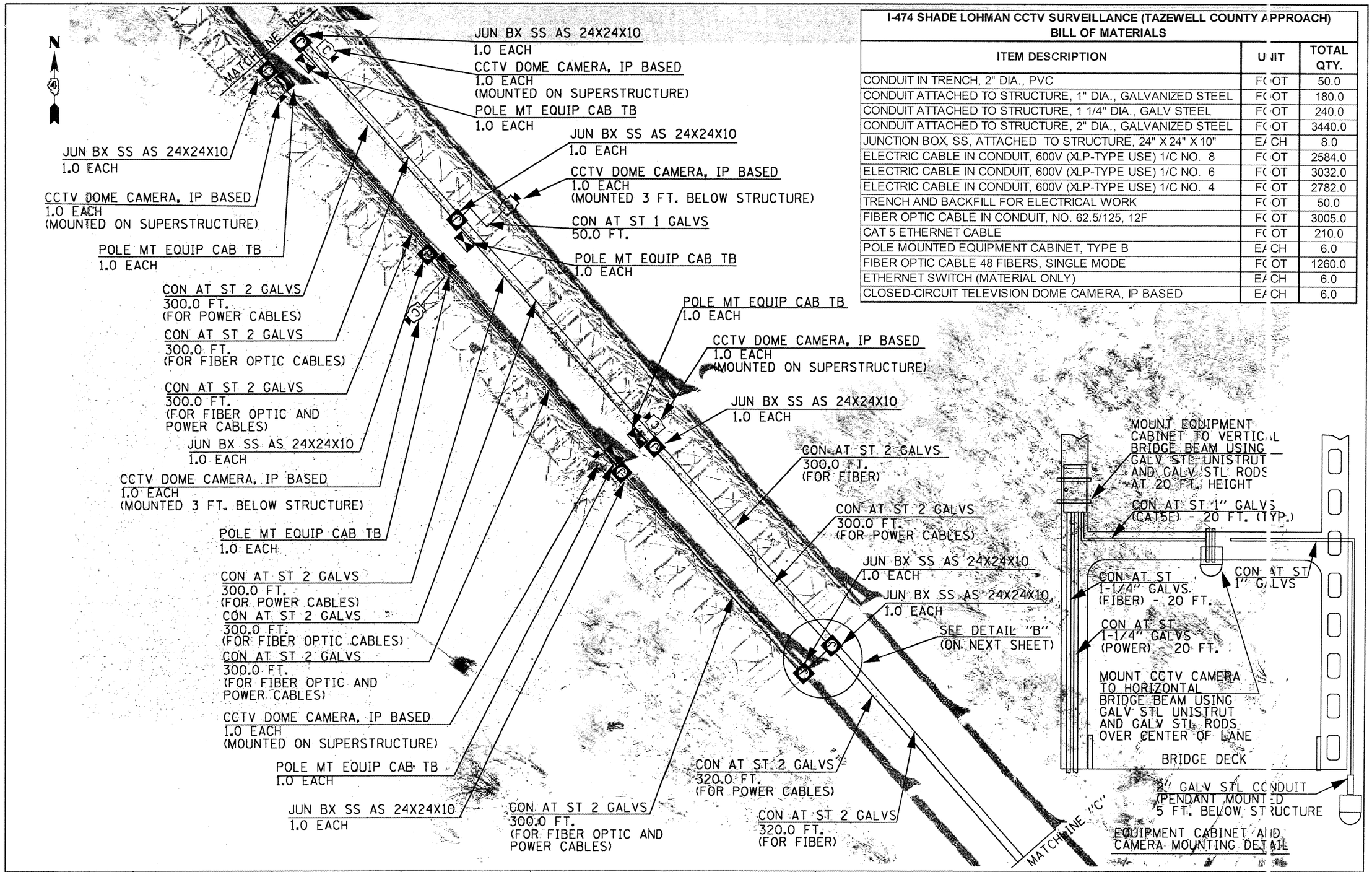

I-474 SHADE LOHMAN CCTV SURVEILLANCE (TAZEWELL COUNTY APPROACH)
BILL OF MATERIALS

ITEM DESCRIPTION	UNIT	TOTAL QTY.
CONDUIT IN TRENCH, 2" DIA., PVC	FOOT	50.0
CONDUIT ATTACHED TO STRUCTURE, 1" DIA., GALVANIZED STEEL	FOOT	180.0
CONDUIT ATTACHED TO STRUCTURE, 1 1/4" DIA., GALV STEEL	FOOT	240.0
CONDUIT ATTACHED TO STRUCTURE, 2" DIA., GALVANIZED STEEL	FOOT	3440.0
JUNCTION BOX, SS, ATTACHED TO STRUCTURE, 24" X 24" X 10"	EACH	8.0
ELECTRIC CABLE IN CONDUIT, 600V (XLP-TYPE USE) 1/C NO. 8	FOOT	2584.0
ELECTRIC CABLE IN CONDUIT, 600V (XLP-TYPE USE) 1/C NO. 6	FOOT	3032.0
ELECTRIC CABLE IN CONDUIT, 600V (XLP-TYPE USE) 1/C NO. 4	FOOT	2782.0
TRENCH AND BACKFILL FOR ELECTRICAL WORK	FOOT	50.0
FIBER OPTIC CABLE IN CONDUIT, NO. 62.5/125, 12F	FOOT	3005.0
CAT 5 ETHERNET CABLE	FOOT	210.0
POLE MOUNTED EQUIPMENT CABINET, TYPE B	EACH	6.0
FIBER OPTIC CABLE 48 FIBERS, SINGLE MODE	FOOT	1260.0
ETHERNET SWITCH (MATERIAL ONLY)	EACH	6.0
CLOSED-CIRCUIT TELEVISION DOME CAMERA, IP BASED	EACH	6.0

FILE NAME 6R269 I-474 Shade Lohman Bridge CCTV	USER NAME = nawajoer	DESIGNED ---	REVISED ---
	Surveillance Line 2-7 Diagr	DRAWN ---	REVISED ---
	PLOT SCALE = 100.000 ' / IN.	CHECKED ---	REVISED ---
	PLOT DATE = 2/7/2011	DATE ---	REVISED ---

STATE OF ILLINOIS
DEPARTMENT OF TRANSPORTATION

I-474 SHADE LOHMANN BRIDGE
CCTV CAMERA SURVEILLANCE – TAZEWELL COUNTY APPROACH

SCALE: _____ ITS SHEET NO. 4 OF 16 SHEETS STA. _____ TO STA. _____

F.A.I. RTE.	SECTION	COUNTY	TOTAL SHEETS	SHEET NO.
474	[(72.90)5B]]-2	PEORIA/TAZEWELL	129	97

CONTRACT NO. 68069

ILLINOIS FED. AID PROJECT

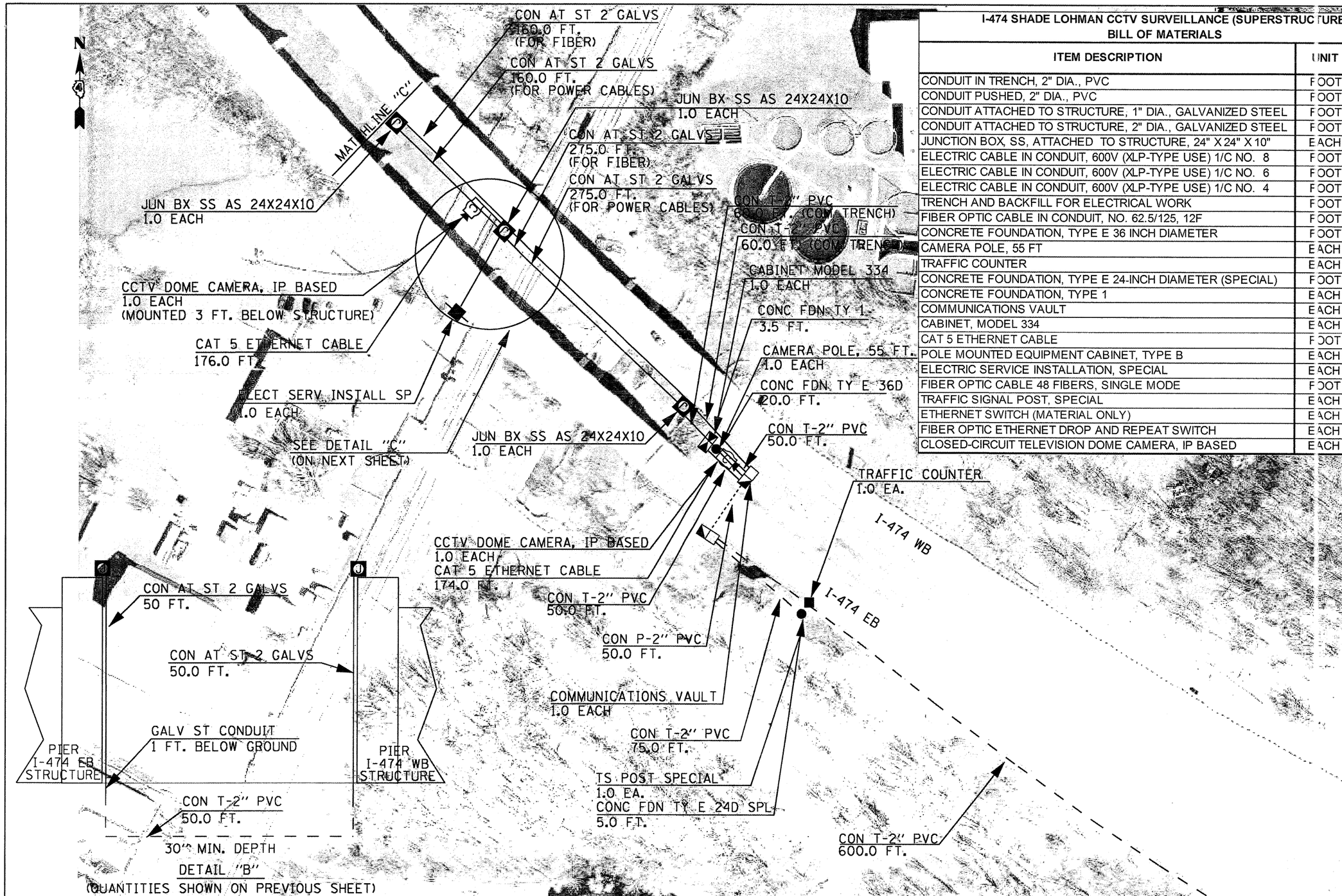

I-474 SHADE LOHMAN CCTV SURVEILLANCE (SUPERSTRUCTURE)
BILL OF MATERIALS

ITEM DESCRIPTION	UNIT	TOTAL QTY.
CONDUIT IN TRENCH, 2" DIA., PVC	FOOT	970.0
CONDUIT PUSHED, 2" DIA., PVC	FOOT	50.0
CONDUIT ATTACHED TO STRUCTURE, 1" DIA., GALVANIZED STEEL	FOOT	55.0
CONDUIT ATTACHED TO STRUCTURE, 2" DIA., GALVANIZED STEEL	FOOT	955.0
JUNCTION BOX, SS, ATTACHED TO STRUCTURE, 24" X 24" X 10"	EACH	3.0
ELECTRIC CABLE IN CONDUIT, 600V (XLP-TYPE USE) 1/C NO. 8	FOOT	686.0
ELECTRIC CABLE IN CONDUIT, 600V (XLP-TYPE USE) 1/C NO. 6	FOOT	1602.0
ELECTRIC CABLE IN CONDUIT, 600V (XLP-TYPE USE) 1/C NO. 4	FOOT	566.0
TRENCH AND BACKFILL FOR ELECTRICAL WORK	FOOT	910.0
FIBER OPTIC CABLE IN CONDUIT, NO. 62.5/125, 12F	FOOT	1797.0
CONCRETE FOUNDATION, TYPE E 36 INCH DIAMETER	FOOT	20.0
CAMERA POLE, 55 FT	EACH	1.0
TRAFFIC COUNTER	EACH	1.0
CONCRETE FOUNDATION, TYPE E 24-INCH DIAMETER (SPECIAL)	FOOT	5.0
CONCRETE FOUNDATION, TYPE 1	EACH	3.5
COMMUNICATIONS VAULT	EACH	2.0
CABINET, MODEL 334	EACH	1.0
CAT 5 ETHERNET CABLE	FOOT	350.0
POLE MOUNTED EQUIPMENT CABINET, TYPE B	EACH	1.0
ELECTRIC SERVICE INSTALLATION, SPECIAL	EACH	1.0
FIBER OPTIC CABLE 48 FIBERS, SINGLE MODE	FOOT	618.0
TRAFFIC SIGNAL POST, SPECIAL	EACH	1.0
ETHERNET SWITCH (MATERIAL ONLY)	EACH	9.0
FIBER OPTIC ETHERNET DROP AND REPEAT SWITCH	EACH	2.0
CLOSED-CIRCUIT TELEVISION DOME CAMERA, IP BASED	EACH	2.0

FILE NAME = 68069 - I-474 Shade Lohmann Bridge CCTV	USER NAME = howalder	DESIGNED - ___	REVISED - ___
	Surveillance - Final 2-7-11.dgn	DRAWN - ___	REVISED - ___
	PLOT SCALE = 100.000 ' / IN.	CHECKED - ___	REVISED - ___
	PLOT DATE = 2/7/2011	DATE - _____	REVISED - ___

STATE OF ILLINOIS
DEPARTMENT OF TRANSPORTATION

I-474 SHADE LOHMANN BRIDGE
CCTV CAMERA SURVEILLANCE – TAZEWELL COUNTY APPROACH

SCALE: _____ | ITS SHEET NO. 5 OF 16 SHEETS | STA. _____ TO STA. _____

F.A.I RTE.	SECTION		COUNTY	TOTAL SHEETS	SHEET NO.
474	[(72,90)5B]]-2	PEOR	TAZEWELL	129	98

CONTRACT NO. 68069
ILLINOIS FED. AID PROJECT

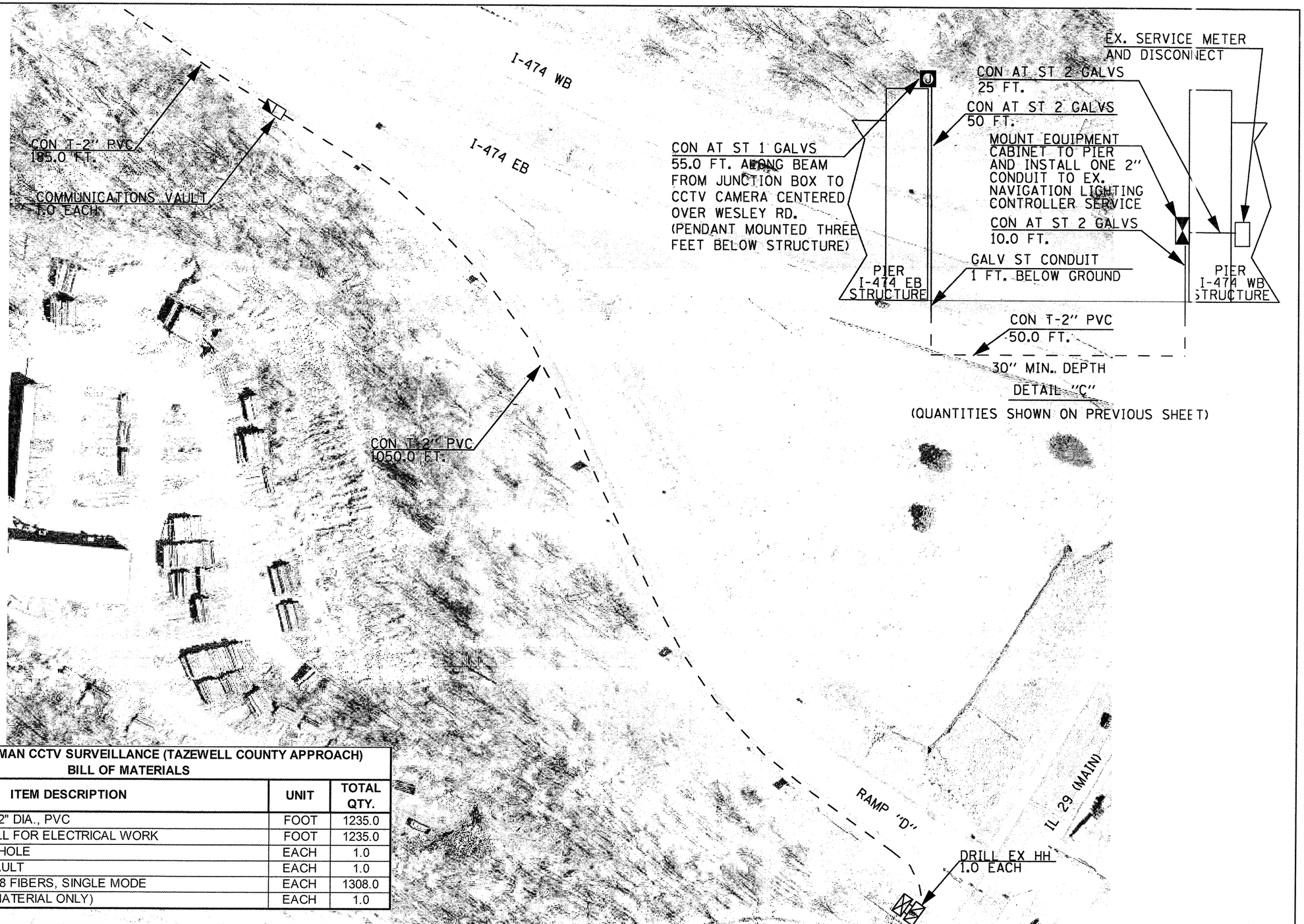

I-474 SHADE LOHMAN CCTV SURVEILLANCE (TAZEWELL COUNTY APPROACH)
BILL OF MATERIALS

ITEM DESCRIPTION	UNIT	TOTAL QTY.
CONDUIT IN TRENCH, 2" DIA., PVC	FOOT	1235.0
TRENCH AND BACKFILL FOR ELECTRICAL WORK	FOOT	1235.0
DRILL EXISTING HANDHOLE	EACH	1.0
COMMUNICATIONS VAULT	EACH	1.0
FIBER OPTIC CABLE 48 FIBERS, SINGLE MODE	EACH	1308.0
ETHERNET SWITCH (MATERIAL ONLY)	EACH	1.0

FILE NAME = 68069 - I-474 Shade Lohmann Bridge CCTV	USER NAME = howalder	DESIGNED - ---	REVISED - ---
	Surveillance - Final 2-7-11.dgn	DRAWN - ---	REVISED - ---
	PLOT SCALE = 100.000 ' / IN.	CHECKED - ---	REVISED - ---
	PLOT DATE = 2/7/2011	DATE - ---	REVISED - ---

STATE OF ILLINOIS
DEPARTMENT OF TRANSPORTATION

I-474 SHADE LOHMANN BRIDGE
CCTV CAMERA SURVEILLANCE – TAZEWELL COUNTY APPROACH

SCALE: --- | ITS SHEET NO. 6 OF 16 SHEETS | STA. --- TO STA. ---

F.A.I RTE.	SECTION	COUNTY	TOTAL SHEETS	SHEET NO.
474	[(72,90)SB]I-2	PEORIA/TAZEWELL	129	91

CONTRACT NO. 68069
ILLINOIS FED. AID PROJECT

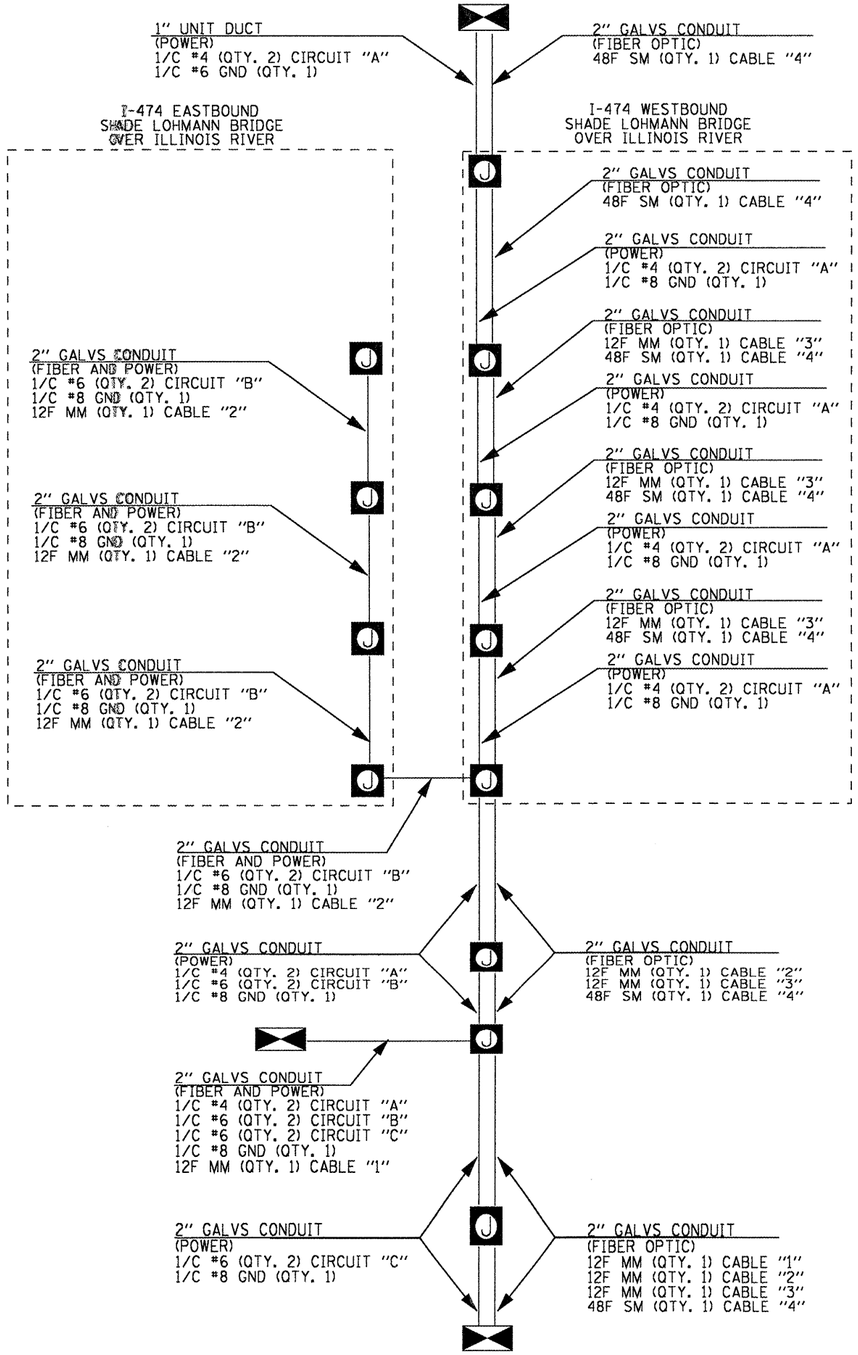

ELECTRIC SERVICE INSTALLATION SPECIAL

THE CONTRACTOR SHALL FURNISH AND INSTALL A FOUR CIRCUIT PANELBOARD EQUIPPED WITH ONE 60A MAIN BREAKER AND THREE 20A BRANCH BREAKERS AND INSTALL IT INSIDE THE PROPOSED TYPE B EQUIPMENT CABINET THAT IS INSTALLED ON THE BRIDGE PIER. THE CONTRACTOR SHALL INSTALL A 1" GALVANIZED STEEL CONDUIT WITH THREE 1/C #6 CABLES (APPROXIMATELY 25 FT.) FROM THE EXISTING NAVIGATION LIGHT CONTROLLER MOUNTED ON THE PIER TO FEED THE NEW PANEL. THE COST OF FURNINSHING AND INSTALLING THE ELECTRIC PANEL, CONDUIT, AND CABLES SHALL BE INCLUDED IN THE BID PRICE FOR ELECTRIC SERVICE INSTALLATION SPECIAL.

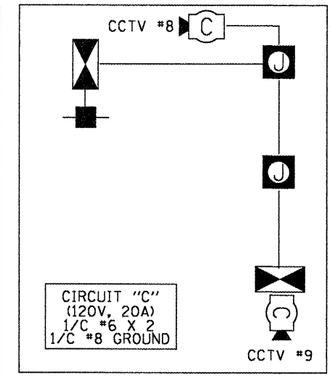

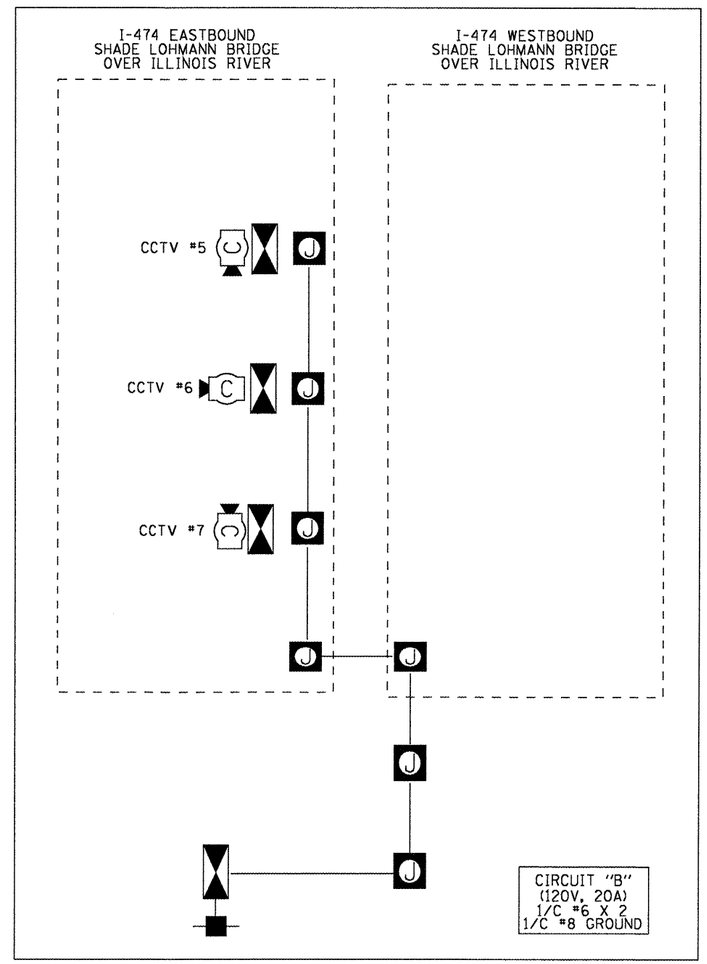

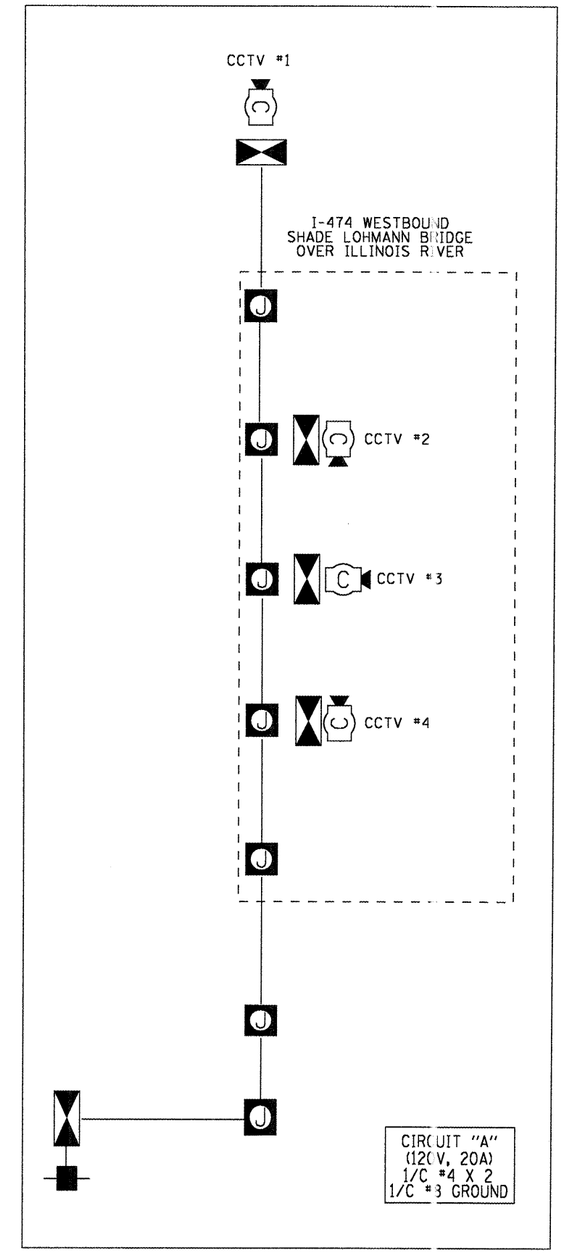

FILE NAME =
68069 - I-474 Shade Lohmann Bridge CCTV Surveillance - Final 2-7-11.dgn
USER NAME = howelder
PLOT SCALE = 100.000 ' / IN.
PLOT DATE = 2/7/2011

DESIGNED - ___
DRAWN - ___
CHECKED - ___
DATE - ________

REVISED - ___ _________
REVISED - ___ _________
REVISED - ___ _________
REVISED - ___ _________

STATE OF ILLINOIS
DEPARTMENT OF TRANSPORTATION

I-474 SHADE LOHMANN BRIDGE CCTV SURVEILLANCE
ELECTRICAL CIRCUIT LINE AND CONDUIT DIAGRAMS

SCALE: ________ ITS SHEET NO. 7 OF 16 SHEETS STA. _________ TO STA. _________

F.A.I RTE.	SECTION	COUNTY	TOTAL SHEETS	SHEET NO.
474	[(72,90)5B]I-2	PEORIA/TAZEWELL	129	100

CONTRACT NO. 68069
ILLINOIS FED. AID PROJECT