F.A.I. RTE.	SECTION	COUNTY	TOTAL SHEETS	SHEET NO.
94	•	COOK	907	647
STA. 1200+00.00		TO STA. 1365+00		
FED. ROAD DIST. NO.	ILLINOIS	FED. AID PROJECT		

• (1516.1, 1717 & 1818) R-8

62695

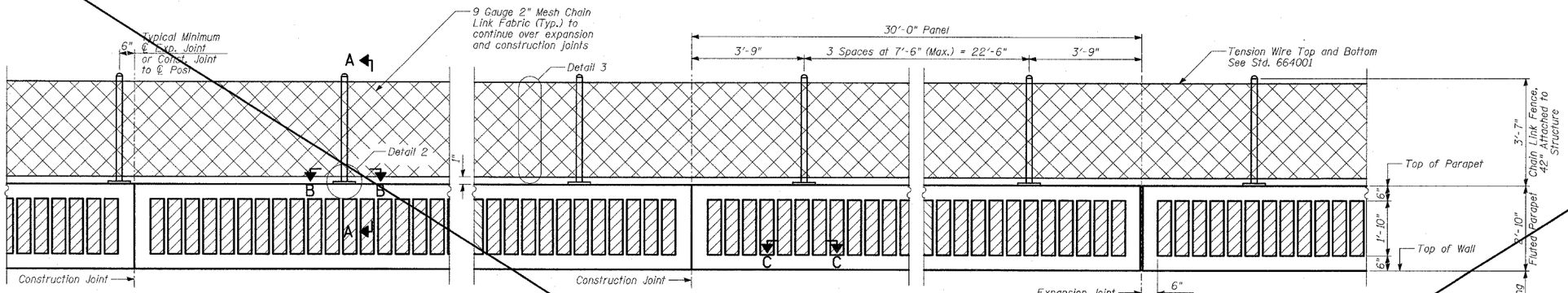

BACK FACE ELEVATION - TOP OF RETAINING WALLS FLUTED PARAPET AND CHAIN LINK FENCE

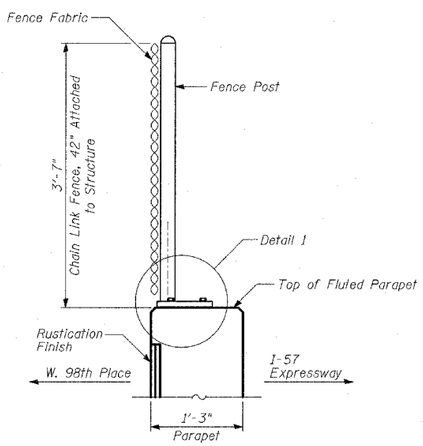

SECTION A-A

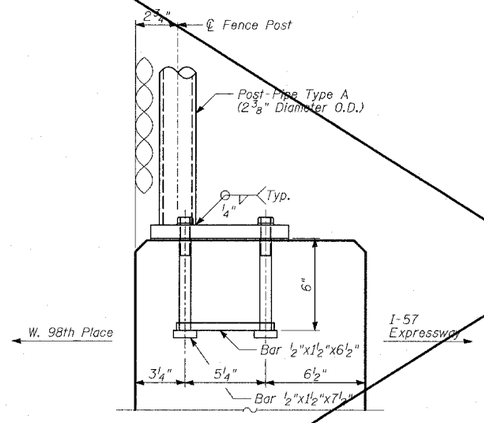

DETAIL 1

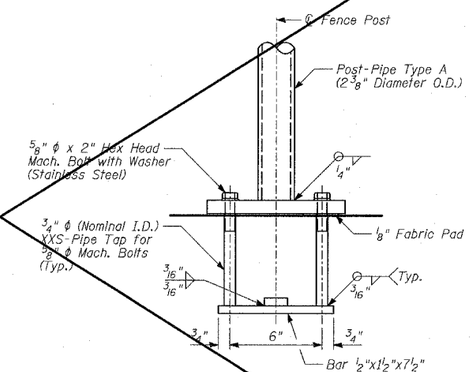

DETAIL 2

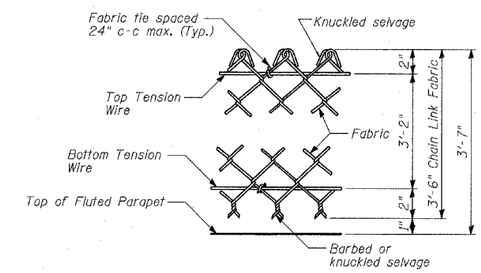

DETAIL 3

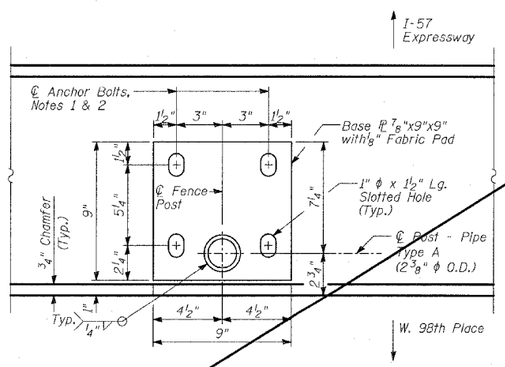

SECTION B-B BASE PLATE PLAN

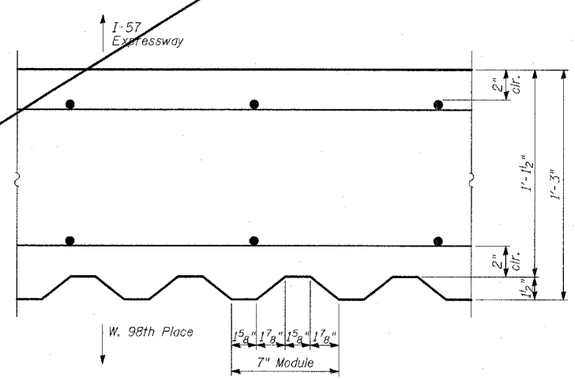

SECTION C-C

BILL OF MATERIAL

ITEM	UNIT	TOTAL
Chain Link Fence, 42" Attached to Structure	FOOT	930

NOTES:

1. In lieu of the cast-in-place anchor bolt assembly shown, the Contractor has the option of drilling and epoxy grouting 5/8" diameter anchor rods with 1 1/4" diameter washers. The Contractor shall use the capsule or the adhesive cartridge type anchor rods that have been previously tested and given prior approval by the Department. The Contractor shall install these anchor rods in pre-drilled holes according to the manufacturer's recommendations and procedures. The capsule or adhesive cartridge shall be sealed with pre-measured amounts of adhesive chemical. Anchor rod threading to be peened after nuts are installed.

2. For additional chain link details, see Standard 664001.

SHEET 12 OF 18

REVISIONS NAME	DATE
REVISED	04/15/05

ILLINOIS DEPARTMENT OF TRANSPORTATION

F.A.I. 94 (DAN RYAN EXPRESSWAY)
RETAINING WALL ALONG W. 98TH PLACE
PARNELL TO C&WI RR
WALL 67 - CHAIN LINK FENCE, 42" ATTACHED TO STRUCTURE

S.N. 016-W952 | DESIGNED BY: MI, DJR
SCALE: N.T.S. | DRAWN BY: DJR
DATE: MARCH 25, 2005 | CHECKED BY: TD, MI

TY·LIN INTERNATIONAL

$FILE$ $TIME$ $DATE$