06-16-2023 LETTING ITEM 173

F.A. RTE.	SECTION	COUNTY	TOTAL SHEETS	SHEET NO.
1388	(Z-2C-15D)BR-1	PEORIA	90	1
	ILLINOIS	CONTRACT NO. 68862		

D-94-026-09

STATE OF ILLINOIS
DEPARTMENT OF TRANSPORTATION

PROPOSED HIGHWAY PLANS

FAS ROUTE 1388 (IL ROUTE 8)
SECTION (Z-2C-15D)BR-1
PROJECT HBFP-26MY(562)
IL 8 OVER THE WEST FORK OF KICKAPOO CREEK
BRIDGE REPLACEMENT
PEORIA COUNTY

C-94-075-21

INDEX OF SHEETS

FOR HIGHWAY STANDARDS, SEE SHEET NO. 2

DESIGN DESIGNATION

FAS ROUTE 1388 (IL ROUTE 8)
MAJOR COLLECTOR – RURAL
ADT = 1500 (2019)
MU = 2.0%
SU = 6.7%
DESIGN SPEED = 55 MPH

℄ STA. 480 + 24.82
EX. STRUCTURE NO. 072-0043
2 – SPAN, 143'-4" BK. TO BK.

℄ STA. 480 + 75.24
PR. STRUCTURE NO. 072-0231
3 – SPAN, 184'-6¼" BK. TO BK.

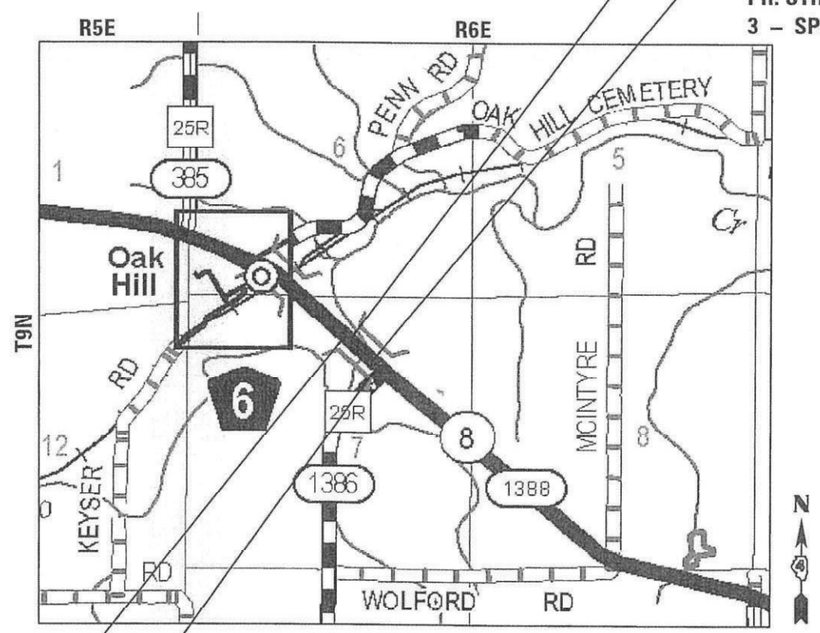

NOT TO SCALE

BEGIN IMPROVEMENT
479 + 20.00
END IMPROVEMENT
482 + 24.31

GROSS LENGTH = 304.31 FT. = 0.058 MILE

NET LENGTH = 304.31 FT. = 0.058 MILE

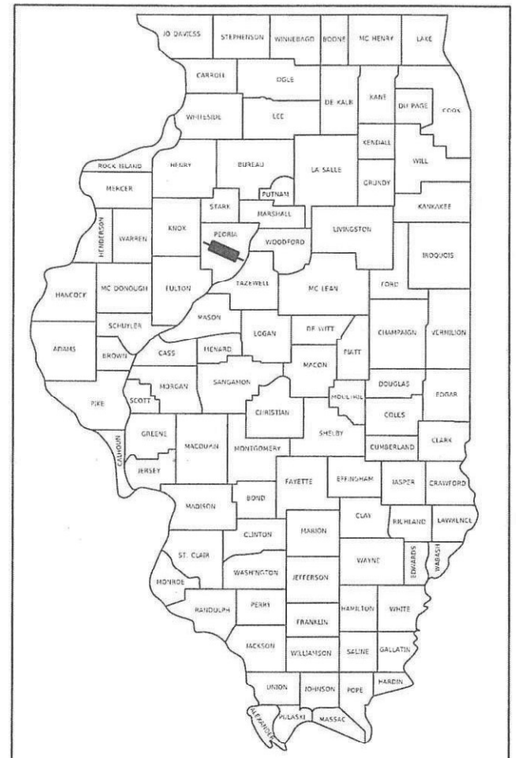

LOCATION OF SECTION INDICATED THUS: –

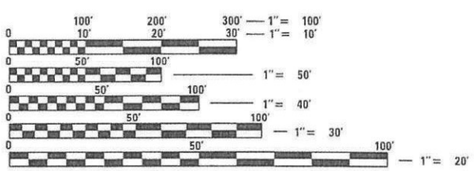

FULL SIZE PLANS HAVE BEEN PREPARED USING STANDARD ENGINEERING SCALES. REDUCED SIZED PLANS WILL NOT CONFORM TO STANDARD SCALES. IN MAKING MEASUREMENTS ON REDUCED PLANS, THE ABOVE SCALES MAY BE USED.

J.U.L.I.E.
JOINT UTILITY LOCATION INFORMATION FOR EXCAVATORS
1-800-892-0123
OR 811

PROJECT ENGINEER: KEVIN HORST 309-671-3472
PROJECT MANAGER: RICH DOTSON 309-671-3455

CONTRACT NO. 68862
CATALOG NO. 034186-00D

SHEILA J. KIMLINGER 49175 REGISTERED PROFESSIONAL ENGINEER OF ILLINOIS

Sheila Kimlinger 6/15/22
SHEILA KIMLINGER P.E.
LICENSE NO. 062-049175
DATE:
EXPIRES: 11-30-2023

PLANS PREPARED BY:

TWM ENGINEERING GEOSPATIAL SERVICES
4940 Old Collinsville Road
Swansea, Illinois 62226
Tel: 618.624.4488
www.twm-inc.com
Illinois Professional Design Firm No. 184-001220
License Expires: 04/30/2023
ILLINOIS - MISSOURI - TENNESSEE

STATE OF ILLINOIS
DEPARTMENT OF TRANSPORTATION

SUBMITTED June 30 20 22
REGIONAL ENGINEER

May 12, 2023
ENGINEER OF DESIGN AND ENVIRONMENT

May 12, 2023
DIRECTOR OF HIGHWAYS PROJECT IMPLEMENTATION

PRINTED BY THE AUTHORITY OF THE STATE OF ILLINOIS

REV. 4/28/23

DISTRICT 4 GENERAL NOTES

AVAILABILITY OF ELECTRONIC FILES

MICROSTATION AND GEOPAK FILES OF THIS PROJECT WILL BE MADE AVAILABLE TO THE CONTRACTOR AFTER CONTRACT AWARD. IF THERE IS A CONFLICT BETWEEN THE ELECTRONIC FILES AND THE PRINTED CONTRACT PLANS AND DOCUMENTS, THE PRINTED CONTRACT PLANS AND DOCUMENTS SHALL TAKE PRECEDENCE OVER THE ELECTRONIC FILES. THE CONTRACTOR SHALL ACCEPT ALL RISK ASSOCIATED WITH USING THE ELECTRONIC FILES AND SHALL HOLD THE DEPARTMENT HARMLESS FOR ANY ERRORS OR OMISSIONS IN THE ELECTRONIC FILES AND THE DATA CONTAINED THEREIN. ERRORS OR DELAYS RESULTING FROM THE USE OF THE ELECTRONIC FILES BY THE CONTRACTOR SHALL NOT RESULT IN AN EXTENSION OF TIME FOR ANY INTERIM OR FINAL COMPLETION DATE OR SHALL NOT BE CONSIDERED CAUSE FOR ADDITIONAL COMPENSATION. THE CONTRACTOR SHALL NOT USE, SHARE, OR DISTRIBUTE THESE ELECTRONIC FILES EXCEPT FOR THE PURPOSE OF CONSTRUCTING THIS CONTRACT. ANY CLAIMS BY THIRD PARTIES DUE TO USE OR ERRORS SHALL BE THE SOLE RESPONSIBILITY OF THE CONTRACTOR. THE CONTRACTOR SHALL INCLUDE THIS DISCLAIMER WITH THE TRANSFER OF THESE ELECTRONIC FILES TO ANY OTHER PARTIES AND SHALL INCLUDE APPROPRIATE LANGUAGE BINDING THEM TO SIMILAR RESPONSIBILITIES.

TREE REMOVAL - UTILITY RELOCATION

TREE REMOVAL MAY BE NECESSARY PRIOR TO UTILITY COMPANIES BEING ABLE TO RELOCATE THEIR FACILITIES OUTSIDE THE CONSTRUCTION LIMITS. THE CONTRACTOR SHOULD COORDINATE ANY CONTRACT TREE REMOVAL ACTIVITIES WITH THE UTILITY COMPANIES TO ELIMINATE CONFLICTS AND POTENTIAL DELAYS CAUSED BY UTILITY TREE REMOVAL ACTIVITIES OR INCOMPLETE UTILITY RELOCATIONS.

PLAN ELEVATIONS - U.S.G.S. MEAN SEA LEVEL DATUM

USE ONE OF THE FOLLOWING TWO OPTIONS.

1. ALL ELEVATIONS SHOWN ON THE PLANS ARE ESTABLISHED FROM U.S.G.S. MEAN SEA LEVEL DATUM.

ENVIRONMENTAL REVIEWS

PRIOR TO THE USE OF ANY PROPOSED BORROW AREAS, USE AREAS (TEMPORARY ACCESS ROADS, DETOURS, RUN-AROUNDS, ETC.) AND/OR WASTE AREAS, THE CONTRACTOR SHALL FILE THE REQUIRED ENVIRONMENTAL RESOURCE REQUEST SURVEYS ACCORDING TO SECTION 107.22 OF THE STANDARD SPECIFICATIONS. THESE SURVEYS ARE REQUIRED IN ORDER FOR THE DEPARTMENT TO CONDUCT CULTURAL AND BIOLOGICAL RESOURCE SURVEYS FOR THE PROPOSED SITE.

THE REQUIRED ENVIRONMENTAL RESOURCE DOCUMENTATION SHALL INCLUDE THE FOLLOWING:

- BDE FORM 2289 (BORROW SITE REVIEW)
- BDE FORM 2290 (WASTE/USE AREA REVIEW)
- A LOCATION MAP SHOWING THE SIZE LIMITS AND LOCATION OF THE USE AREA
- COLOR PHOTOGRAPHS DEPICTING THE USE AREA
- BORROW AREA ENTRY AGREEMENT FORM - D4 PL0101

PRIOR TO ANY WASTE MATERIALS BEING REMOVED FROM THE CONSTRUCTION SITE THE REQUIRED ENVIRONMENTAL RESOURCE SURVEYS SHALL BE OBTAINED AND FILED BY THE CONTRACTOR. EXCESS WASTE PRODUCTS REMOVED FROM THE CONSTRUCTION SITE SHALL BE DISPOSED OF AS REQUIRED IN SECTION 202.03 OF THE STANDARD SPECIFICATIONS.

ANY PROTRUDING METAL BARS SHALL BE REMOVED PRIOR TO THE DISPOSAL OF BROKEN CONCRETE AT APPROVED DISPOSAL SITES.

PLEASE NOTE THAT A MINIMUM OF FOUR WEEKS SHALL BE ALLOWED FOR THE DISTRICT TO OBTAIN THE REQUIRED WASTE SITE ENVIRONMENTAL CLEARANCES AND SIX WEEKS FOR THE REQUIRED BORROW SITE ENVIRONMENTAL CLEARANCES.

PAVEMENT STATION NUMBERS & PLACEMENT

THE CONTRACTOR SHALL PROVIDE LABOR AND MATERIALS REQUIRED TO IMPRINT PAVEMENT STATION NUMBERS IN THE FINISHED SURFACE OF THE PAVEMENT AND/OR OVERLAY. THE NUMBERS SHALL BE APPROXIMATELY 3/4 INCH (20 MM) WIDE, 5 INCHES (125MM) HIGH AND 5/8 INCH (15 MM) DEEP.

THE PAVEMENT STATION NUMBERS SHALL BE INSTALLED AS SPECIFIED HEREIN:

INTERVAL - 200 FEET (ENGLISH STATIONING) OR 100 METERS (METRIC STATIONING)

BOTTOM OF NUMBERS - 6 INCHES (150 MM) FROM THE INSIDE EDGE OF THE PAVEMENT MARKING.

LOCATION:

-2, 3 & 5 LANE PAVEMENTS - RIGHT EDGE OF PAVEMENT IN DIRECTION OF INCREASING STATIONS

-MULTI-LANE DIVIDED ROADWAYS - OUTSIDE EDGE OF PAVEMENT IN BOTH DIRECTIONS

-RAMPS - ALONG BASELINE EDGE OF PAVEMENT

POSITION - STATIONS SHALL BE PLACED SO THEY CAN BE READ FROM THE ADJACENT SHOULDER

FORMAT - ENGLISH (METRIC) PAVEMENT STATIONS SHALL USE THIS FORMAT "XXX (XX+X00)", WHERE X REPRESENTS THE PAVEMENT STATION

THIS WORK WILL NOT BE PAID FOR SEPARATELY, BUT WILL BE INCLUDED IN THE COST OF THE ASSOCIATED PAVEMENT AND/OR OVERLAY PAY ITEMS.

ORDERING LENGTH CONFIRMATION - DRAINAGE ITEMS

THE CONTRACTOR SHALL CONSULT WITH THE ENGINEER IN REGARD TO THE EXACT LENGTH OF THE BOX/PIPE CULVERTS, STORM SEWERS, AND/OR PIPE DRAINS REQUIRED PRIOR TO ORDERING THESE ITEMS.

RIGHT-OF-WAY MARKERS

WHEN INSTALLING RIGHT-OF-WAY MARKERS, CARE SHALL BE TAKEN TO NOT DISTURB ANY EXISTING PROPERTY/RIGHT-OF-WAY PINS. IF A PROPERTY/RIGHT-OF-WAY PIN IS FOUND AT THE LOCATION OF A PROPOSED RIGHT-OF-WAY MARKER, THE MARKER SHALL BE PLACED ONE (1) FOOT IN FRONT OF THE PIN.

PROJECT SPECIFIC GENERAL NOTES

UTILITIES - LOCATIONS/INFORMATION ON PLANS

UNLESS NOTED OTHERWISE, THE LOCATIONS OF EXISTING WATER MAINS, GAS MAINS, SEWERS, ELECTRIC POWER LINES, TELEPHONE LINES AND OTHER UTILITIES AS SHOWN ON THE PLANS ARE BASED ON CAREFUL FIELD INVESTIGATION AND THE BEST INFORMATION AVAILABLE, BUT THEY ARE NOT GUARANTEED. IT SHALL BE THE CONTRACTOR'S RESPONSIBILITY TO ASCERTAIN THEIR EXACT LOCATION FROM THE UTILITY COMPANIES AND BY FIELD INSPECTION.

EMBANKMENT

THE EMBANKMENT SHALL BE PLACED AS SOON AS POSSIBLE TO ALLOW FOR AS MUCH SETTLEMENT AS POSSIBLE BEFORE THE APPROACH PAVEMENT IS CONSTRUCTED. SEE SPECIAL PROVISIONS FOR SETTLETMENT PLATFORMS.

PAVED DITCH REMOVAL

THE EXISTING DITCH FROM APPROXIMATELY STA. 482+20 RT TO STA. 483+76 RT IS CONSTRUCTED OF CONCRETE REVETMENT MAT. THE REMOVAL OF THE ENTIRE CONCRETE REVETMENT MAT SYSTEM SHALL BE INCLUDED IN THE COST PER FOOT FOR PAY ITEM PAVED DITCH REMOVAL.

HOT-MIX ASPHALT MIXTURE REQUIREMENTS

MIXTURE USE(S):	PARTIAL DEPTH PATCHING
AC/PG:	PG 58-28
DESIGN AIR VOIDS:	4.0% @ Ndes = 50
MIX COMPOSITION: (MIXTURE GRADATION)	IL 9.5
FRICTION AGGREGATE:	MIXTURE "C"
QUALITY MANAGEMENT PROGRAM:	QCQA

NOTES:

1) INDIVIDUAL LIFT THICKNESS OF EACH MIX TYPE WILL BE NO LESS THAN 3 TIMES NOMINAL MAXIMUM AGGREGATE SIZE AND NO MORE THAN 6 TIMES NOMINAL MAXIMUM AGGREGATE SIZE, UNLESS OTHERWISE APPROVED BY THE ENGINEER.

2) FOR DESIGN PURPOSES, MIXTURE WEIGHT FOR ALL MIXES IS DETERMINED TO BE 112.0 LB/SQYD/INCH, UNLESS OTHERWISE NOTED.

DISTRICT 4 STANDARDS

205001-D4	SLOPE STEPS DETAIL
205101-D4	SETTLEMENT PLATFORM
505001-D4	BEARING ANCHOR BOLT SEALANT
601101-D4	SLOPE DRAIN DETAILS FOR BURIED PIPES
601301-D4	PIPE ELBOW
601401-D4	DETAILS OF SEEPAGE COLLARS FOR BURIED PIPES
630101-D4	GUARDRAIL EROSION CONTROL TREATMENTS
667101-D4	PERMANENT SURVEY TIE & PERMANENT SURVEY MARKERS TY.I - TY.II
780001-D4	TYPICAL PAVEMENT MARKINGS

HIGHWAY STANDARDS

000001-08	STANDARD SYMBOLS, ABBREVIATIONS AND PATTERNS
001001-02	AREA OF REINFORCEMENT BARS
001006	DECIMAL OF AN INCH AND OF A FOOT
280001-07	TEMPORARY EROSION CONTROL SYSTEMS
420001-10	PAVEMENT JOINTS
420401-13	PAVEMENT CONNECTOR (PCC) FOR BRIDGE APPROACH SLAB
515001-04	NAME PLATE FOR BRIDGES
542401-04	METAL FLARED END SECTION FOR PIPE CULVERTS
601101-02	CONCRETE HEADWALL FOR PIPE UNDERDRAINS
610001-09	SHOULDER INLET WITH CURB
630001-12	STEEL PLATE BEAM GUARDRAIL
630301-09	SHOULDER WIDENING FOR TYPE 1 (SPECIAL) GUARDRAIL TERMINALS
631031-18	TRAFFIC BARRIER TERMINAL, TYPE 6
666001-01	RIGHT OF WAY MARKERS
701001-02	OFF-RD OPERATIONS, 2L, 2W, MORE THAN 15' AWAY
701006-05	OFF-RD OPERATIONS, 2L, 2W, 15' TO 24" FROM PAVEMENT EDGE
701301-04	LANE CLOSURE, 2L, 2W SHORT TIME OPERATIONS
701311-03	LANE CLOSURE 2L, 2W MOVING OPERATIONS - DAY ONLY
701901-08	TRAFFIC CONTROL DEVICES
720001-01	SIGN PANEL MOUNTING DETAILS
720006-04	SIGN PANEL ERECTION DETAILS
725001-01	OBJECT AND TERMINAL MARKERS
780001-05	TYPICAL PAVEMENT MARKINGS
782006-01	GUARDRAIL AND BARRIER WALL REFLECTOR MOUNTING DETAILS
BLR21-9	TYPICAL APPLICATION OF TRAFFIC CONTROL DEVICES FOR CONSTRUCTION ON RURAL LOCAL HIGHWAYS

COMMITMENTS

- COMMITMENTS ARE NOT TO BE ALTERED WITHOUT THE WRITTEN APPROVAL OF ALL PARTIES TO WHICH THE COMMITMENT WAS MADE.
- NO COMMITMENTS HAVE BEEN MADE ON THIS PROJECT.

CODE NO.	PAY ITEM	UNIT	TOTAL QUANTITY (80% FED 20% STATE)	CONSTRUCTION CODE BRIDGE 0010 RURAL
20100500	TREE REMOVAL, ACRES	ACRE	0.75	0.75
20200100	EARTH EXCAVATION	CU YD	1010	1010
20300100	CHANNEL EXCAVATION	CU YD	9650	9650
20400800	FURNISHED EXCAVATION	CU YD	1265	1265
20700110	POROUS GRANULAR EMBANKMENT	TONS	320	320
21001000	GEOTECHNICAL FABRIC FOR GROUND STABILIZATION	SQ YD	132	132
21101615	TOPSOIL FURNISH AND PLACE, 4"	SQ YD	2473	2473
25000300	SEEDING, CLASS 3	ACRE	0.50	0.50
25000400	NITROGEN FERTILIZER NUTRIENT	POUND	45	45
25000500	PHOSPHORUS FERTILIZER NUTRIENT	POUND	45	45
25000600	POTASSIUM FERTILIZER NUTRIENT	POUND	45	45
** 25000750	MOWING	ACRE	1.50	1.50
25100115	MULCH, METHOD 2	ACRE	0.25	0.25
25100635	HEAVY DUTY EROSION CONTROL BLANKET	SQ YD	2027	2027
28000250	TEMPORARY EROSION CONTROL SEEDING	POUND	150	150

** 100% STATE

CODE NO.	PAY ITEM	UNIT	TOTAL QUANTITY (80% FED 20% STATE)	CONSTRUCTION CODE BRIDGE 0010 RURAL
28000305	TEMPORARY DITCH CHECKS	FOOT	839	839
28000400	PERIMETER EROSION BARRIER	FOOT	2094	2094
28100207	STONE RIPRAP, CLASS A4	TON	533	533
28100209	STONE RIPRAP, CLASS A5	TON	4145	4145
28200200	FILTER FABRIC	SQ YD	5322	5322
30300112	AGGREGATE SUBGRADE IMPROVEMENT 12"	SQ YD	132	132
40200100	AGGREGATE SURFACE COURSE, TYPE A	TON	21	21
42000060	WELDED WIRE REINFORCEMENT	SQ YD	121	121
42000080	PAVEMENT CONNECTOR (PCC) FOR BRIDGE APPROACH SLAB	SQ YD	65	65
42001300	PROTECTIVE COAT	SQ YD	153	153
44000100	PAVEMENT REMOVAL	SQ YD	411	411
44004000	PAVED DITCH REMOVAL	FOOT	257	257
44004250	PAVED SHOULDER REMOVAL	SQ YD	99	99
48101200	AGGREGATE SHOULDERS, TYPE B	TON	46	46
50100100	REMOVAL OF EXISTING STRUCTURES	EACH	1	1

CODE NO.	PAY ITEM	UNIT	TOTAL QUANTITY (80% FED 20% STATE)	CONSTRUCTION CODE BRIDGE 0010 RURAL
50105220	PIPE CULVERT REMOVAL	FOOT	136	136
50200100	STRUCTURE EXCAVATION	CU YD	192	192
50300100	FLOOR DRAINS	EACH	18	18
50300225	CONCRETE STRUCTURES	CU YD	173.8	173.8
50300255	CONCRETE SUPERSTRUCTURE	CU YD	252.3	252.3
50300260	BRIDGE DECK GROOVING	SQ YD	808	808
50300300	PROTECTIVE COAT	SQ YD	1061	1061
50301350	CONCRETE SUPERSTRUCTURE (APPROACH SLAB)	CU YD	97.7	97.7
50500105	FURNISHING AND ERECTING STRUCTURAL STEEL	L SUM	1	1
50500505	STUD SHEAR CONNECTORS	EACH	3366	3366
50800105	REINFORCEMENT BARS	POUND	27930	27930
50800205	REINFORCEMENT BARS, EPOXY COATED	POUND	115860	115860
50800515	BAR SPLICERS	EACH	120	120
50800530	MECHANICAL SPLICERS	EACH	192	192
51201600	FURNISHING STEEL PILES HP12X53	FOOT	630	630

	CODE NO.	PAY ITEM	UNIT	TOTAL QUANTITY (80% FED 20% STATE)	CONSTRUCTION CODE BRIDGE 0010 RURAL
	51202305	DRIVING PILES	FOOT	630	630
	51203600	TEST PILE STEEL HP12X53	EACH	2	2
	51500100	NAME PLATES	EACH	1	1
	51602000	PERMANENT CASING	FOOT	321	321
*	51603000	DRILLED SHAFT IN SOIL	CU YD	114.5	114.5
*	51604000	DRILLED SHAFT IN ROCK	CU YD	30.4	30.4
	52100510	ANCHOR BOLTS, 3/4"	EACH	24	24
	52100520	ANCHOR BOLTS, 1"	EACH	24	24
	54210182	PIPE ELBOW, 12"	EACH	4	4
	54262712	METAL FLARED END SECTIONS 12"	EACH	2	2
	58600101	GRANULAR BACKFILL FOR STRUCTURES	CU YD	100	100
	59100100	GEOCOMPOSITE WALL DRAIN	SQ YD	66	66
	60100945	PIPE DRAINS 12"	FOOT	76	76
	60146304	PIPE UNDERDRAINS FOR STRUCTURES 4"	FOOT	154	154
	61000050	CONCRETE THRUST BLOCKS	EACH	2	2

*= SPECIALTY ITEM

	CODE NO.	PAY ITEM	UNIT	TOTAL QUANTITY (80% FED 20% STATE)	CONSTRUCTION CODE BRIDGE 0010 RURAL
	61000335	TYPE G INLET BOX, STANDARD 610001	EACH	2	2
*	63000001	STEEL PLATE BEAM GUARDRAIL, TYPE A, 6 FOOT POSTS	FOOT	1112.5	1112.5
*	63100085	TRAFFIC BARRIER TERMINAL, TYPE 6	EACH	4	4
*	63100167	TRAFFIC BARRIER TERMINAL, TYPE 1 (SPECIAL) TANGENT	EACH	4	4
	63200310	GUARDRAIL REMOVAL	FOOT	534	534
	66600105	FURNISHING AND ERECTING RIGHT OF WAY MARKERS	EACH	7	7
*	66700205	PERMANENT SURVEY MARKERS, TYPE I	EACH	1	1
	67000400	ENGINEER'S FIELD OFFICE, TYPE A	CAL MO	10	10
	67000600	ENGINEER'S FIELD LABORATORY	CAL MO	10	10
	67100100	MOBILIZATION	L SUM	1	1
	70107025	CHANGEABLE MESSAGE SIGN	CAL DA	28	28
	70300221	TEMPORARY PAVEMENT MARKING - LINE 4"- PAINT	FOOT	685	685
*	72501000	TERMINAL MARKER - DIRECT APPLIED	EACH	4	4
*	78009004	MODIFIED URETHANE PAVEMENT MARKING - LINE 4"	FOOT	685	685
*	78200005	GUARDRAIL REFLECTORS, TYPE A	EACH	18	18

*= SPECIALTY ITEM

	CODE NO.	PAY ITEM	UNIT	TOTAL QUANTITY (80% FED 20% STATE)	CONSTRUCTION CODE BRIDGE 0010 RURAL
*	78200010	BARRIER WALL REFLECTORS, TYPE B	EACH	5	5
*	78200011	BARRIER WALL REFLECTORS, TYPE C	EACH	5	5
	78300201	PAVEMENT MARKING REMOVAL - GRINDING	SQ FT	228	228
	Z0001002	GUARDRAIL AGGREGATE EROSION CONTROL	TON	331	331
	Z0001900	ASBESTOS BEARING PAD REMOVAL	EACH	22	22
	Z0013798	CONSTRUCTION LAYOUT	L SUM	1	1
	Z0018002	DRAINAGE SCUPPERS, DS-11	EACH	2	2
	Z0029604	HEADWALL REMOVAL	EACH	1	1
	Z0064540	SEEPAGE COLLAR	EACH	2	2
	Z0065100	SETTLEMENT PLATFORMS	EACH	2	2
	X0556100	PARTIAL DEPTH PATCHING (SPECIAL)	SQ YD	69	69
	X4201410	BRIDGE APPROACH PAVEMENT CONNECTOR (SPECIAL)	SQ YD	88	88
	X4421000	PARTIAL DEPTH PATCHING	TON	8	8
	X7010216	TRAFFIC CONTROL AND PROTECTION, (SPECIAL)	L SUM	1	1

* SPECIALITY ITEMS

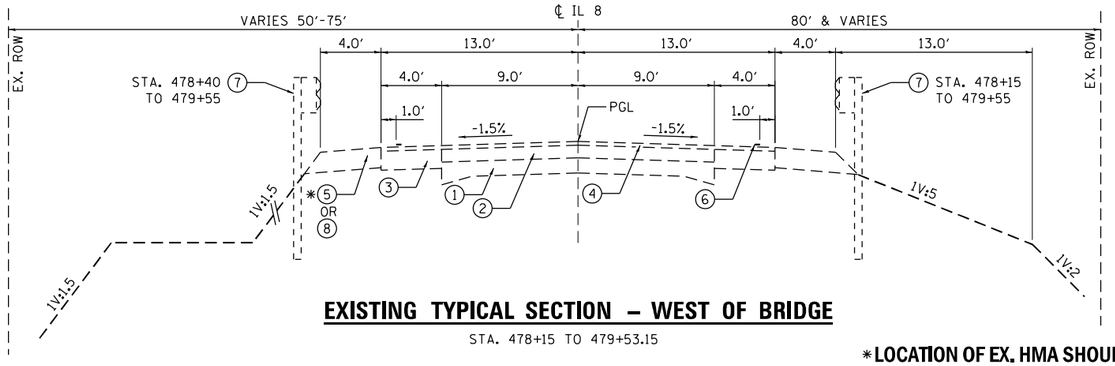

EXISTING TYPICAL SECTION – WEST OF BRIDGE

STA. 478+15 TO 479+53.15

EXISTING BRIDGE
STA. 479+53.15 TO STA. 480+96.49

***LOCATION OF EX. HMA SHOULDERS**

STA. 478+40 TO 479+55 LT
STA. 478+15 TO 479+55 RT
STA. 480+95 TO 481+92 LT
STA. 480+95 TO 482+34 RT

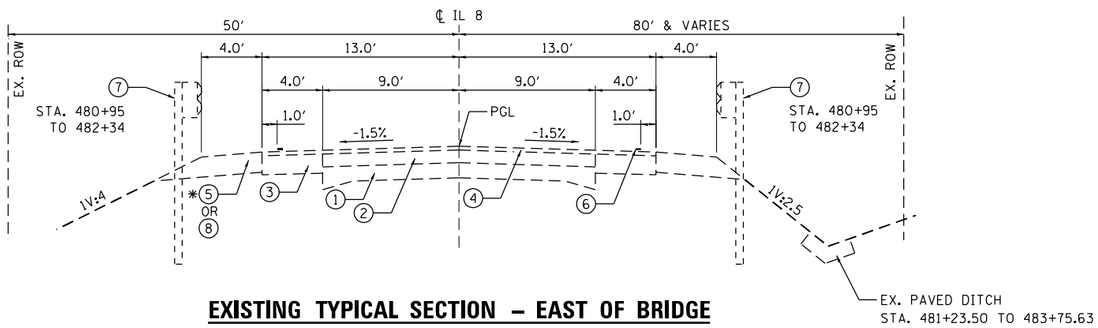

EXISTING TYPICAL SECTION – EAST OF BRIDGE

STA. 480+96.49 TO 482+34

NOTE: THE PAVEMENT CONNECTOR FOR BRIDGE APPROACH AND BRIDGE APPROACH SLAB ARE OMITTED FROM THE PROPOSED TYPICAL SECTIONS.

LEGEND - EXISTING:

1. PORTLAND CEMENT CONCRETE PAVEMENT (9-6-9)
2. HOT-MIX ASPHALT BASE COURSE, 7½" AND VARIES
3. HOT-MIX ASPHALT BASE COURSE, 9"
4. HOT-MIX ASPHALT SURFACE COURSE, 1½" AND VARIES
5. HOT-MIX ASPHALT SHOULDER
6. PAVEMENT MARKING
7. GUARDRAIL
8. AGGREGATE SHOULDER
9. RESERVED

LEGEND - PROPOSED:

10. AGGREGATE SHOULDERS, TY B
11. EMBANKMENT
12. SPBGR, TY A, 6' POSTS
13. GUARDRAIL AGGREGATE EROSION CONTROL
14. TOPSOIL FURNISH AND PLACE, 4"

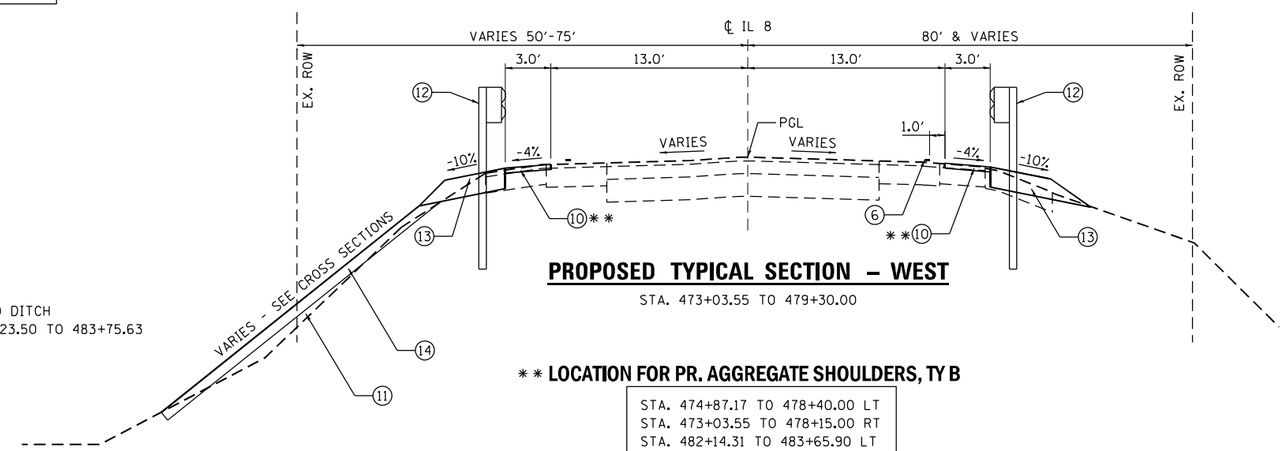

PROPOSED TYPICAL SECTION – WEST

STA. 473+03.55 TO 479+30.00

**** LOCATION FOR PR. AGGREGATE SHOULDERS, TY B**

STA. 474+87.17 TO 478+40.00 LT
STA. 473+03.55 TO 478+15.00 RT
STA. 482+14.31 TO 483+65.90 LT
STA. 482+34.00 TO 483+98.81 RT

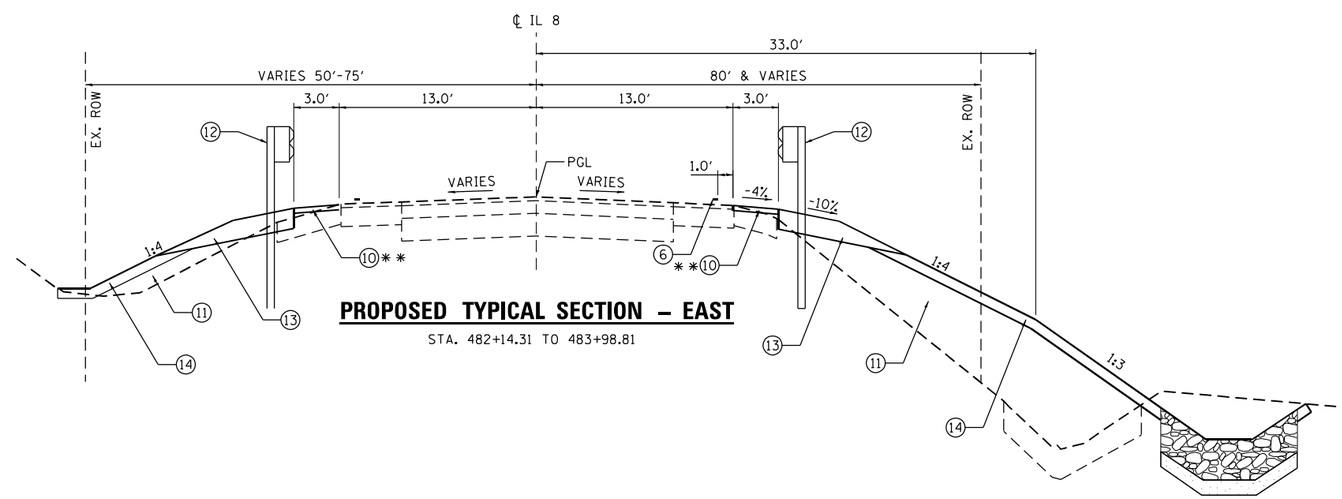

PROPOSED TYPICAL SECTION – EAST

STA. 482+14.31 TO 483+98.81

P:\2009\090072\IL 8-Kick\4.CADD\4.2-TR\SHEETS\D468862-sht-typical.dgn

FILE NAME =	USER NAME = efisher	DESIGNED -	REVISED -
		DRAWN - MJJ	REVISED -
	PLOT SCALE = 10.0000 ' / in.	CHECKED - EKS	REVISED -
	PLOT DATE = 6/14/2022	DATE -	REVISED -

STATE OF ILLINOIS
DEPARTMENT OF TRANSPORTATION

TYPICAL SECTIONS
IL 8 OVER THE WEST FORK OF KICKAPOO CREEK

SCALE: NTS | SHEET NO. 1 OF 1 SHEETS | STA. | TO STA.

F.A.S. RTE.	SECTION	COUNTY	TOTAL SHEETS	SHEET NO.
1388	(Z-2C-15D)BR-1	PEORIA	90	9
		CONTRACT NO. 68862		
	ILLINOIS	FED. AID PROJECT		

EARTHWORK

LOCATION			EARTH EXCAVATION	EARTH EXCAVATION ADJUSTED FOR 25% SHRINKAGE	CHANNEL EXCAVATION	POROUS GRANULAR EMBANKMENT	EMBANKMENT	BALANCE WASTE (+) SHORTAGE (-)	FURNISHED EXCAVATION
STATION	TO	STATION	CU YD	CU YD	CU YD	TON	CU YD	CU YD	CU YD
IL 8									
474+50.00	TO	479+83.15	429	322	0		1431	-1109	
481+67.34	TO	484+00.00	581	436	0		573	-137	
		TOTAL:	1010	758	0		2004	-1247	1247
CHANNEL									
1+00.00	TO	3+73.68	0	0	9651	320	16	-16	16
		TOTAL:	1010	758	9651	320	2020	-1263	1263
		PAY TOTAL:	1010		9650	320			1265

RIPRAP SCHEDULE

LOCATION				STONE RIPRAP, CLASS A4	STONE RIPRAP, CLASS A5	FILTER FABRIC
STATION	TO	STATION	LT/RT	TON	TON	SQ YD
IL 8						
475+12.98	TO	475+75.00	LT	76.6		114.9
479+26.61	TO	479+50.00	RT	27.6		41.5
479+50.00	TO	480+62.61	RT		436.3	475.9
480+84.92	TO	481+75.00	RT		363.9	397.0
480+90.96	TO	483+77.65	RT	214.3		321.4
481+75.00	TO	482+50.00	RT	215.0		322.4
CHANNEL						
1+06.85	TO	3+73.68	LT		2102.6	2293.6
1+23.39	TO	3+70.79	RT		1242.2	1355.1
			TOTAL:	533	4145	5322

REMOVAL SCHEDULE

LOCATION				HEADWALL REMOVAL	PIPE CULVERT REMOVAL	GUARDRAIL REMOVAL	PAVEMENT REMOVAL	PAVED SHOULDER REMOVAL	PAVED DITCH REMOVAL
STATION	TO	STATION	LT/RT	EACH	FOOT	FOOT	SQ YD	SQ YD	FOOT
IL 8									
478+15.01	TO	479+55.34	RT			140.3			
478+40.10	TO	479+55.13	LT			115.0			
479+30.00	TO	479+52.78	LT					9.0	
479+30.00	TO	479+53.15	LT/RT				66.9		
479+30.00	TO	479+53.62	RT					8.3	
480+94.78	TO	482+33.89	LT			139.2			
480+94.87	TO	482+34.01	RT			139.2			
480+96.49	TO	481+93.99	LT					36.0	
480+96.49	TO	482+14.31	LT/RT				344.0		
480+96.49	TO	482+14.31	RT					45.5	
481+23.52	TO	483+76.21	RT						256.7
481+27.48	TO	482+63.46	LT	1	136.1				
			TOTAL:	1	136	534	411	99	257

PATCHING SCHEDULE

LOCATION			PARTIAL DEPTH PATCHING	PARTIAL DEPTH PATCHING (SPECIAL)
STATION	TO	STATION	TON	SQ YD
IL 8				
479+20.00	TO	479+30.00	4.1	36.7
482+14.31	TO	482+24.31	3.7	32.8
		TOTAL:	8	69

TEMPORARY DITCH CHECK SCHEDULE

LOCATION		TEMPORARY DITCH CHECKS	
STATION	LT/RT	EA	FOOT
IL 8			
479+72.80	RT	1	9.3
480+05.89	RT	1	9.3
480+94.02	RT	1	9.3
481+01.07	RT	1	9.3
481+08.12	RT	1	9.3
481+20.30	RT	1	9.3
481+32.99	RT	1	9.3
481+45.68	RT	1	9.3
481+58.36	RT	1	9.3
481+70.83	RT	1	9.3
481+74.65	LT	1	9.3
482+07.98	RT	1	9.3
482+57.11	RT	1	9.3
482+74.65	LT	1	9.3
482+99.65	LT	1	9.3
483+02.07	RT	1	9.3
483+21.94	RT	1	9.3
483+24.65	LT	1	9.3
483+31.07	RT	1	9.3
483+35.99	RT	1	9.3
483+40.91	RT	1	9.3
483+45.83	RT	1	9.3
483+51.15	RT	1	9.3
483+54.71	RT	1	9.3
483+58.30	RT	1	9.3
483+61.89	RT	1	9.3
483+65.48	RT	1	9.3
483+69.07	RT	1	9.3
483+72.65	RT	1	9.3
483+76.06	RT	1	9.3
		SUB-TOTAL:	279.5
		3 APPLICATIONS	838.6
		TOTAL:	839

RIGHT OF WAY MARKERS SCHEDULE

LOCATION			FURNISHING AND ERECTING RIGHT OF WAY MARKERS
STATION	OFFSET	LT/RT	EACH
IL 8			
478+00.00	75.00	LT	1
479+50.00	190.00	LT	1
481+10.00	190.00	LT	1
482+00.00	50.00	LT	1
482+00.00	80.00	RT	1
482+25.00	90.00	RT	1
483+99.78	90.02	RT	1
		TOTAL:	7

MOWING SCHEDULE

LOCATION						MOWING
STATION	TO	STATION		AREA (ACRE)	# OF MOWINGS	ACRE
IL 8						
474+87.17	TO	479+00.00	LT	0.142	3	0.4
473+03.80	TO	479+26.61	RT	0.214	3	0.6
481+75.00	TO	483+65.67	LT	0.066	3	0.2
482+50.00	TO	483+98.81	RT	0.051	3	0.2
					TOTAL:	1.50

SEEDING SCHEDULE

LOCATION			SEEDING, CLASS 3	NITROGEN FERTILIZER NUTRIENT	PHOSPHORUS FERTILIZER NUTRIENT	POTASSIUM FERTILIZER NUTRIENT	MULCH, METHOD 2	TEMP. EROSION CONTROL SEEDING (POUND) (3 APPL.)	TOPSOIL FURNISH AND PLACE, 4" (SEE NOTE)
STATION	TO	STATION	ACRE	POUND	POUND	POUND	ACRE	POUND	SQ YD
IL 8									
473+03.80	TO	483+98.81	0.36	32.3	32.3	32.3	0.13	107.7	1738.1
CHANNEL									
1+00.00	TO	3+73.68	0.15	13.7	13.7	13.7	0.00	45.6	734.7
		TOTAL:	0.51	46.0	46.0	46.0	0.13	153.3	2472.8
		PAY TOTAL:	0.50	45	45	45	0.25	150	2473

NOTE: THIS QUANTITY NOT INCLUDED IN FURNISHED EXCAVATION

PAVEMENT CONNECTOR SCHEDULE

LOCATION			PAVEMENT CONNECTOR (PCC) FOR BRIDGE APPROACH SLAB	BRIDGE APPROACH PAVEMENT CONNECTOR (SPECIAL)	WELDED WIRE REINFORCEMENT	AGGREGATE SUBGRADE IMPROVEMENT 12"	GEOTECHNICAL FABRIC FOR GROUND STABILIZATION	PROTECTIVE COAT
STATION	TO	STATION	SQ YD	SQ YD	SQ YD	SQ YD	SQ YD	SQ YD
IL 8								
479+30.00	TO	479+54.00		88.0	69.8	77.4	77.4	88.0
481+96.49	TO	482+14.31	65.3		51.5	54.2	54.2	65.3
		TOTAL:	65	88	121	132	132	153

DRAINAGE SCHEDULE

LOCATION			PIPE ELBOW, 12"	METAL FLARED END SECTIONS, 12"	PIPE DRAINS 12"	TYPE G INLET BOX, STANDARD 610001	CONCRETE THRUST BLOCKS	SEEPAGE COLLAR
STATION	OFFSET	LT/RT	EACH	EACH	FOOT	EACH	EACH	EACH
IL 8								
479+46.51	14.63	LT			38.0	1		
	16.54		1					
	31.83							1
	37.04		1				1	
	47.92			1				
479+49.23	14.63	RT			37.6	1		
	16.54		1					
	31.64							1
	37.04		1				1	
	47.52			1				
		TOTAL:	4	2	76	2	2	2

PERMANENT SURVEY MARKERS SCHEDULE

LOCATION	NORTHING	EASTING	STATION	OFFSET	SURVEY MARKERS, TYPE I
					EACH
SN 072-0231	SEE SPECIAL PROVISIONS				1
				TOTAL:	1

CHANGEABLE MESSAGE SIGN SCHEDULE

LOCATION	# OF SIGNS	# OF DAYS	CHANGEABLE MESSAGE SIGN
			CAL DA
SEE DETOUR PLAN	2	14	28
		TOTAL:	28

HEAVY DUTY EROSION CONTROL BLANKET SCHEDULE

LOCATION				HEAVY DUTY EROSION CONTROL BLANKET
				SQ YD
IL 8				
478+00.00	TO	479+00.00	LT	462
482+50.00	TO	482+75.43	RT	641
CHANNEL				
1+22.89	TO	3+19.17	LT	925
			TOTAL:	2,027

ENTRANCE SCHEDULE

LOCATION		AGGREGATE SURFACE COURSE, TYPE A
		TON
IL 8		
474+76.22	LT	20.7
	TOTAL:	21

PAVEMENT MARKING SCHEDULE

LOCATION					TEMPORARY PAVEMENT MARKING - LINE 4" - PAINT	PAVEMENT MARKING REMOVAL - GRINDING	MODIFIED URETHANE PAVEMENT MARKING - LINE 4"
STATION	TO	STATION	LOCATION	TYPE	FOOT	SQ FT	FOOT
IL 8							
479+20.00	TO	482+24.31	LT	EDGE LINE - WHITE	304.3	101.4	304.3
479+20.00	TO	482+24.31	RT	EDGE LINE -WHITE	304.3	101.4	304.3
479+20.00	TO	482+24.31	CL	SKIP-DASH - YELLOW	76.1	25.4	76.1
				TOTAL:	685	228	685

TREE REMOVAL SCHEDULE

LOCATION				TREE REMOVAL, ACRES
STATION TO STATION				ACRE
IL 8				
475+22.67	TO	475+58.25	LT	0.005
478+04.07	TO	480+22.90	LT	0.167
478+89.32	TO	481+48.41	LT	0.554
480+01.03	TO	480+38.66	RT	0.005
480+98.07	TO	481+11.55	RT	0.001
			TOTAL:	0.732
			PAY TOTAL:	0.75

GUARDRAIL SCHEDULE

LOCATION				STEEL PLATE BEAM GUARDRAIL, TYPE A, 6 FOOT POSTS	TRAFFIC BARRIER TERMINAL, TYPE 6	TRAFFIC BARRIER TERMINAL, TYPE 1 (SPECIAL) TANGENT	GUARDRAIL REFLECTORS, TYPE A	BARRIER WALL REFLECTORS, TYPE B	BARRIER WALL REFLECTORS, TYPE C	TERMINAL MARKER - DIRECT APPLIED	AGGREGATE SHOULDERS, TYPE B	GUARDRAIL AGGREGATE EROSION CONTROL
STATION	TO	STATION	LT/RT	FOOT	EACH	EACH	EACH	EACH	EACH	EACH	TON	TON
IL 8												
473+34.92	TO	473+84.92	RT			1	8			1	19.9	141.9
473+84.92	TO	479+34.92		550.0								
479+34.92	TO	479+72.42			1							
479+72.42	TO	481+83.70	RT					3	3			
481+83.70	TO	482+21.20	RT		1		3				6.5	44.3
482+21.20	TO	483+33.70		112.5								
483+33.70	TO	483+83.70				1				1		
475+04.28	TO	475+54.28	LT			1	5			1	13.7	102.3
475+54.28	TO	479+29.28		375.0								
479+29.28	TO	479+66.78			1							
479+66.78	TO	481+78.05	LT					2	2			
481+78.05	TO	482+15.55	LT		1		2				5.9	42.1
482+15.55	TO	482+90.55		75.0								
482+90.55	TO	483+40.55				1				1		
			TOTAL:	1112.5	4	4	18	5	5	4	46	331

PERIMETER EROSION BARRIER SCHEDULE

LOCATION				PERIMETER EROSION BARRIER
STATION	TO	STATION		FOOT
IL 8				
473+03.94	TO	480+43.09	RT	779.8
475+00.00	TO	478+75.00	LT	434.2
480+90.97	TO	483+77.99	RT	301.6
481+11.82	TO	481+32.22	RT	47.4
CHANNEL				
1+00.00	TO	3+73.68	RT	231.8
1+25.00	TO	3+73.68	LT	299.3
			TOTAL:	2,094

PROP. CURVE P_CHANNEL1
PI STA. = 2+81.62
Δ = 79° 29′ 25″ (RT)
D = 71° 59′ 06″
R = 79.59′
T = 66.19′
L = 110.43′
E = 23.92′
P.C. STA. = 2+15.44
P.T. STA. = 3+25.86

EXIST. CURVE IL8_ALIGN1
PI STA. = 488+51.46
Δ = 1° 54′ 30″ (LT)
D = 0° 11′ 47″
R = 29,156.85′
T = 485.60′
L = 971.11′
E = 4.04′
e = -----
T.R. = -----
S.E. RUN = -----
P.C. STA. = 483+65.86
P.T. STA. = 493+36.97

NOT TO SCALE

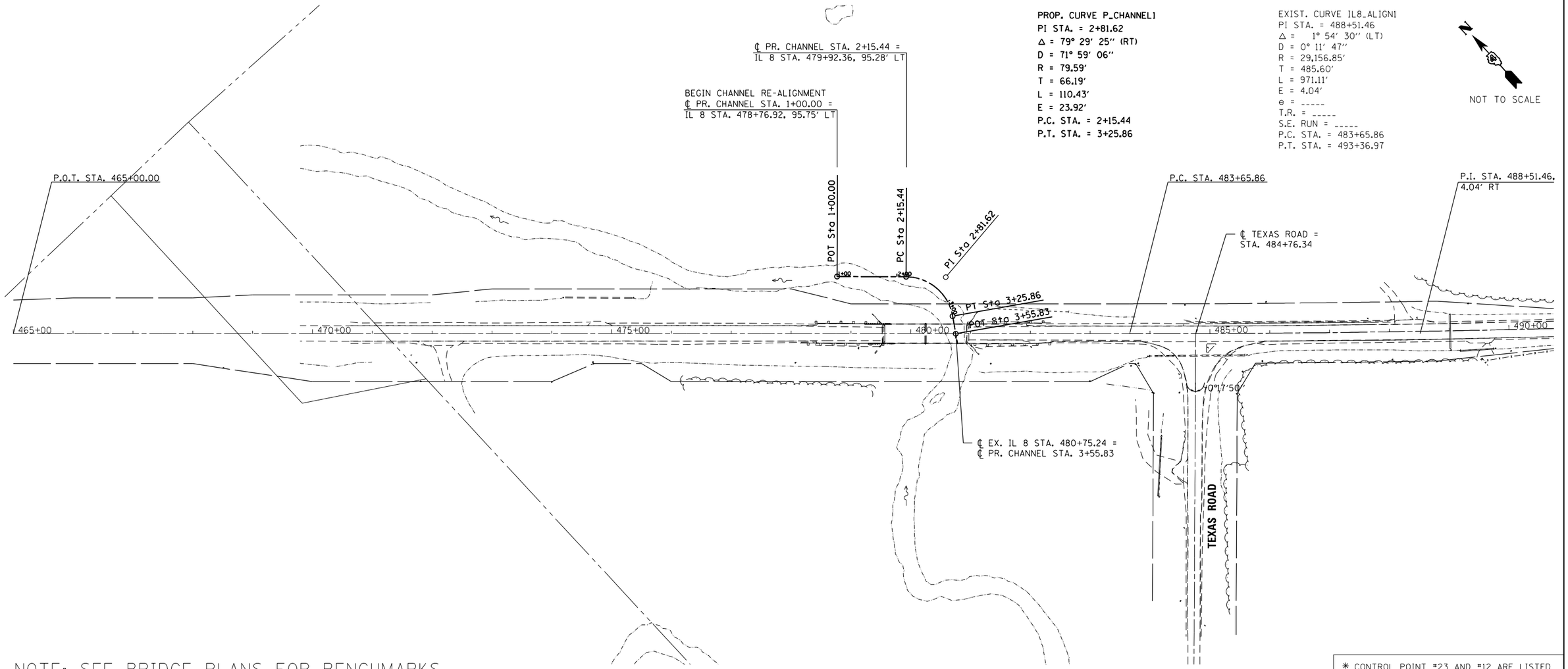

NOTE: SEE BRIDGE PLANS FOR BENCHMARKS.

* CONTROL POINT #23 AND #12 ARE LISTED TO VERIFY STATIONING

CONTROL POINT #24 P.O.T.
STA. 465+00.00, 0.00′

N: 1500127.14
E: 2380838.95

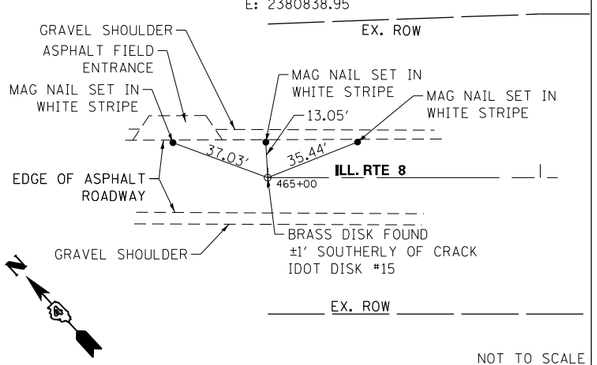

* CONTROL POINT #23
STA. 475+00.05, 0.05′ LT

N: 1499447.51
E: 2381572.56

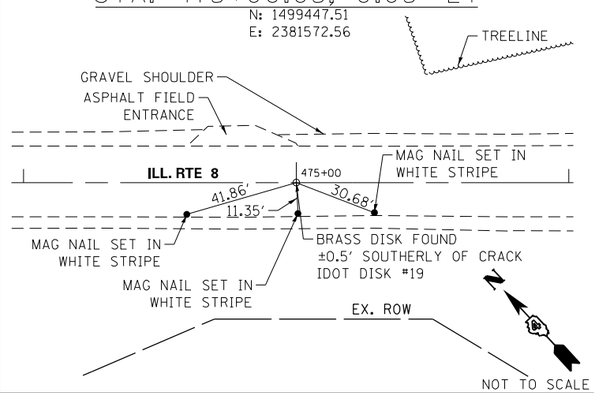

CONTROL POINT #11 P.C.
STA. 483+65.86, 0.00′

N: 1498859.03
E: 2382207.64

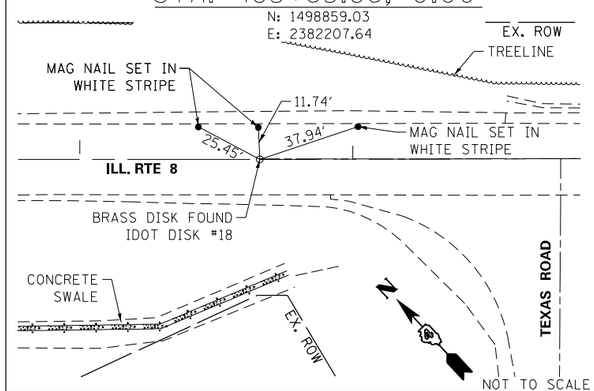

* CONTROL POINT #12
STA. 488+51.34, 4.07′ RT

N: 1498529.03
E: 2382563.78

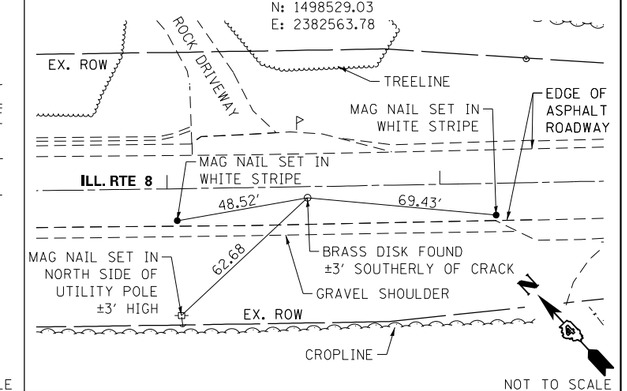

FILE NAME = D468862-sht-ATB.dgn	USER NAME = efisher	DESIGNED -	REVISED -
		DRAWN -	REVISED -
	PLOT SCALE = 166.6667 ′ / in.	CHECKED -	REVISED -
Default	PLOT DATE = 6/14/2022	DATE -	REVISED -

STATE OF ILLINOIS
DEPARTMENT OF TRANSPORTATION

ALIGNMENT, TIES AND BENCHMARKS
IL 8 OVER THE WEST FORK OF KICKAPOO CREEK

SCALE: | SHEET 1 OF 1 SHEETS | STA. | TO STA.

F.A.S. RTE.	SECTION	COUNTY	TOTAL SHEETS	SHEET NO.
1388	(Z-2C-15D)BR-1	PEORIA	90	12
		CONTRACT NO. 68862		
	ILLINOIS FED. AID PROJECT			

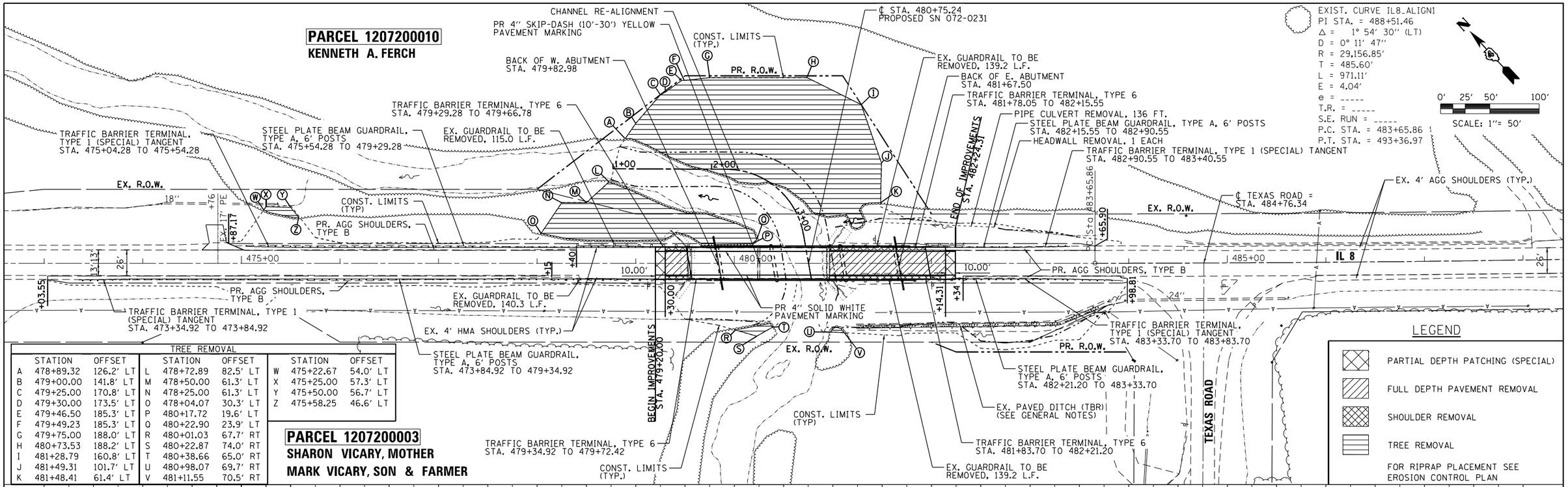

TREE REMOVAL

	STATION	OFFSET		STATION	OFFSET		STATION	OFFSET
A	478+89.32	126.2' LT	L	478+72.89	82.5' LT	W	475+22.67	54.0' LT
B	479+00.00	141.8' LT	M	478+50.00	61.3' LT	X	475+25.00	57.3' LT
C	479+25.00	170.8' LT	N	478+25.00	61.3' LT	Y	475+50.00	56.7' LT
D	479+30.00	173.5' LT	O	478+04.07	30.3' LT	Z	475+58.25	46.6' LT
E	479+46.50	185.3' LT	P	480+17.72	19.6' LT			
F	479+49.23	185.3' LT	Q	480+22.90	23.9' LT			
G	479+75.00	188.0' LT	R	480+01.03	67.7' RT			
H	480+73.53	188.2' LT	S	480+22.87	74.0' RT			
I	481+28.79	160.8' LT	T	480+38.66	65.0' RT			
J	481+49.31	101.7' LT	U	480+98.07	69.7' RT			
K	481+48.41	61.4' LT	V	481+11.55	70.5' RT			

PLAN	SURVEYED	PLOTTED	ALIGNMENT CHECKED	RT. OF WAY CHECKED	CADD FILE NAME	NOTE BOOK NO.	BY	DATE

PROFILE	SURVEYED	PLOTTED	GRADES CHECKED	BRK. NOTED	STRUCTURE NOTAT'NS CHKD	NOTE BOOK NO.	BY	DATE

P:\2009\090072\IL 8-Kick\4.CADD\4.2-TR\SHEETS\D468862-sht-plnprf.dgn

FILE NAME =	USER NAME = dlee	DESIGNED -	REVISED -
		DRAWN -	REVISED -
	PLOT SCALE = 100.0000 ' / in.	CHECKED -	REVISED -
	PLOT DATE = 6/24/2022	DATE -	REVISED -

STATE OF ILLINOIS
DEPARTMENT OF TRANSPORTATION

PLAN & PROFILE
IL 8 OVER THE WEST FORK OF KICKAPOO CREEK

SCALE: 1"=50' | SHEET NO. 1 OF 1 SHEETS | STA. | TO STA.

F.A.S. RTE.	SECTION	COUNTY	TOTAL SHEETS	SHEET NO.
1388	(Z-2C-15D)BR-1	PEORIA	90	13

CONTRACT NO. 68862

ILLINOIS FED. AID PROJECT

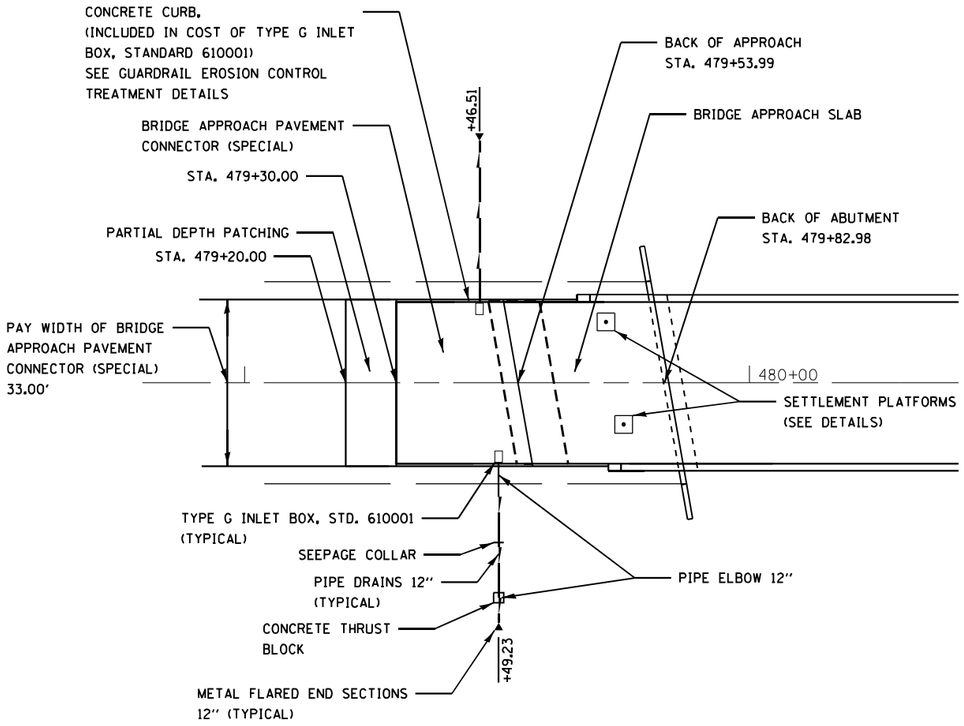

WEST APPROACH

GUARDRAIL NOT SHOWN FOR CLARITY

SEE SLOPE DRAIN DETAIL FOR BURRIED PIPES FOR ADDITIONAL DETAILS

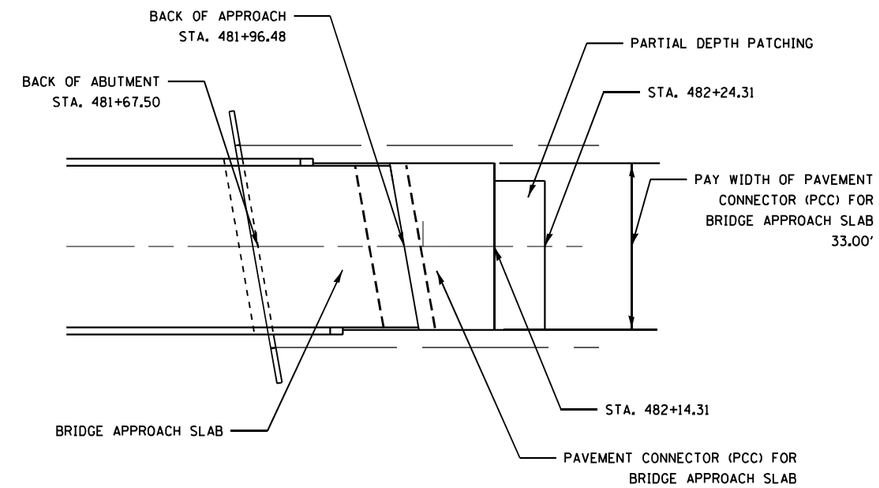

EAST APPROACH

GUARDRAIL NOT SHOWN FOR CLARITY

FILE NAME = D468862-sht-bridgeapproach-plan.dgn	USER NAME = efisher	DESIGNED -	REVISED -	STATE OF ILLINOIS DEPARTMENT OF TRANSPORTATION	BRIDGE APPROACH PLAN IL 8 OVER THE WEST FORK OF KICKAPOO CREEK	F.A.S. RTE.	SECTION	COUNTY	TOTAL SHEETS / SHEET NO.
		DRAWN -	REVISED -			1388	(Z-2C-15D)BR-1	PEORIA	90 / 14
	PLOT SCALE = 30.0000 ' / in.	CHECKED -	REVISED -					CONTRACT NO. 68862	
Default	PLOT DATE = 6/14/2022	DATE -	REVISED -		SCALE: NTS / SHEET 1 OF 1 SHEETS / STA. TO STA.		ILLINOIS	FED. AID PROJECT	

NOTE:
SEE CHANNEL CROSS SECTIONS FOR MORE DETAILS

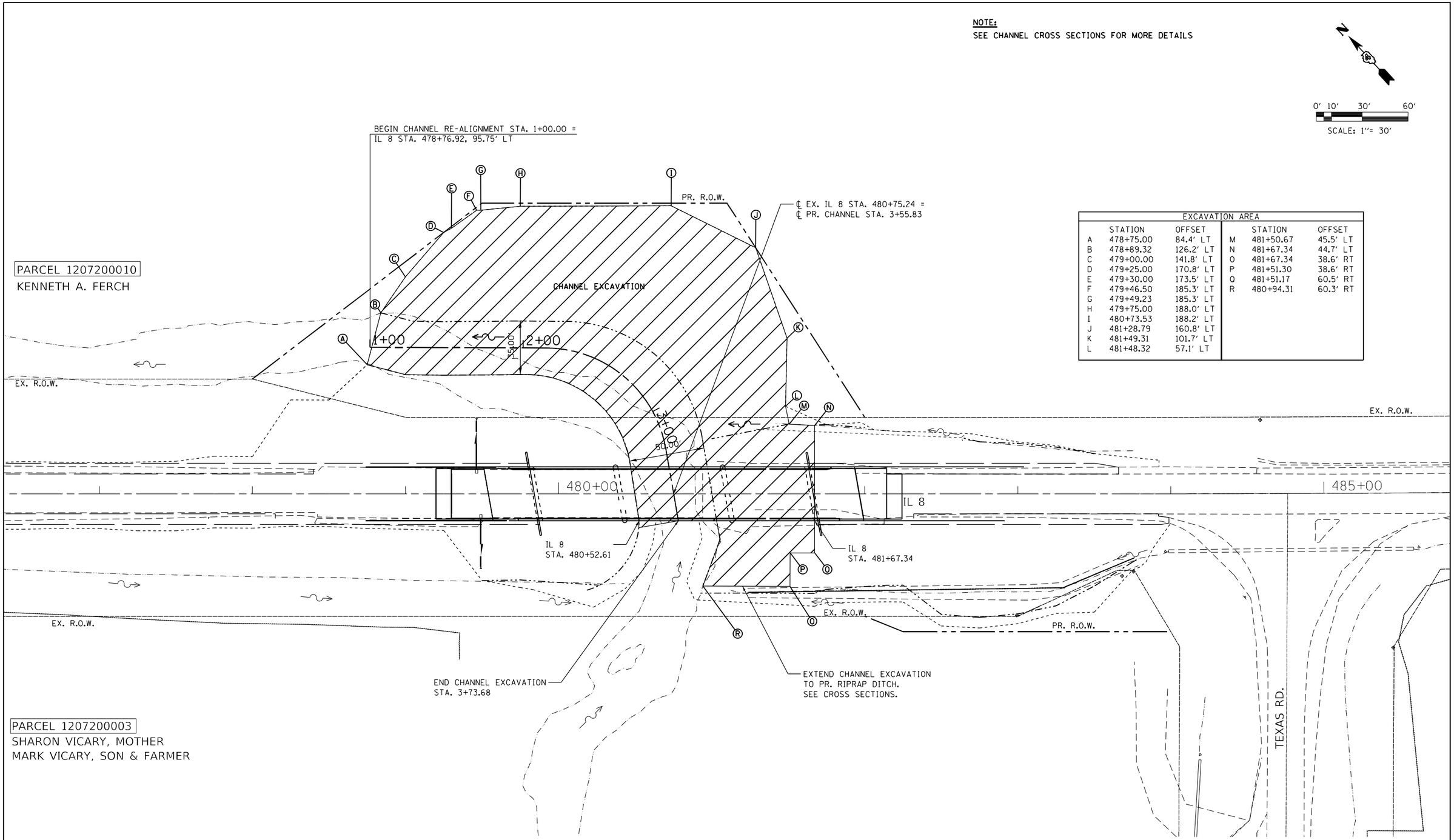

EXCAVATION AREA

	STATION	OFFSET		STATION	OFFSET
A	478+75.00	84.4' LT	M	481+50.67	45.5' LT
B	478+89.32	126.2' LT	N	481+67.34	44.7' LT
C	479+00.00	141.8' LT	O	481+67.34	38.6' RT
D	479+25.00	170.8' LT	P	481+51.30	38.6' RT
E	479+30.00	173.5' LT	Q	481+51.17	60.5' RT
F	479+46.50	185.3' LT	R	480+94.31	60.3' RT
G	479+49.23	185.3' LT			
H	479+75.00	188.0' LT			
I	480+73.53	188.2' LT			
J	481+28.79	160.8' LT			
K	481+49.31	101.7' LT			
L	481+48.32	57.1' LT			

FILE NAME = D468862-sht-excavation.dgn	USER NAME = efisher	DESIGNED -	REVISED -
		DRAWN -	REVISED -
	PLOT SCALE = 60.0000 ' / in.	CHECKED -	REVISED -
Default	PLOT DATE = 6/14/2022	DATE -	REVISED -

STATE OF ILLINOIS
DEPARTMENT OF TRANSPORTATION

LIMITS OF CHANNEL EXCAVATION
IL 8 OVER THE WEST FORK OF KICKAPOO CREEK

SCALE: 1" = 30' | SHEET 1 OF 1 SHEETS | STA. TO STA.

F.A.S. RTE.	SECTION	COUNTY	TOTAL SHEETS	SHEET NO.
1388	(Z-2C-15D)BR-1	PEORIA	90	15

CONTRACT NO. 68862

ILLINOIS FED. AID PROJECT

IL 8 CLOSURE AND DETOUR

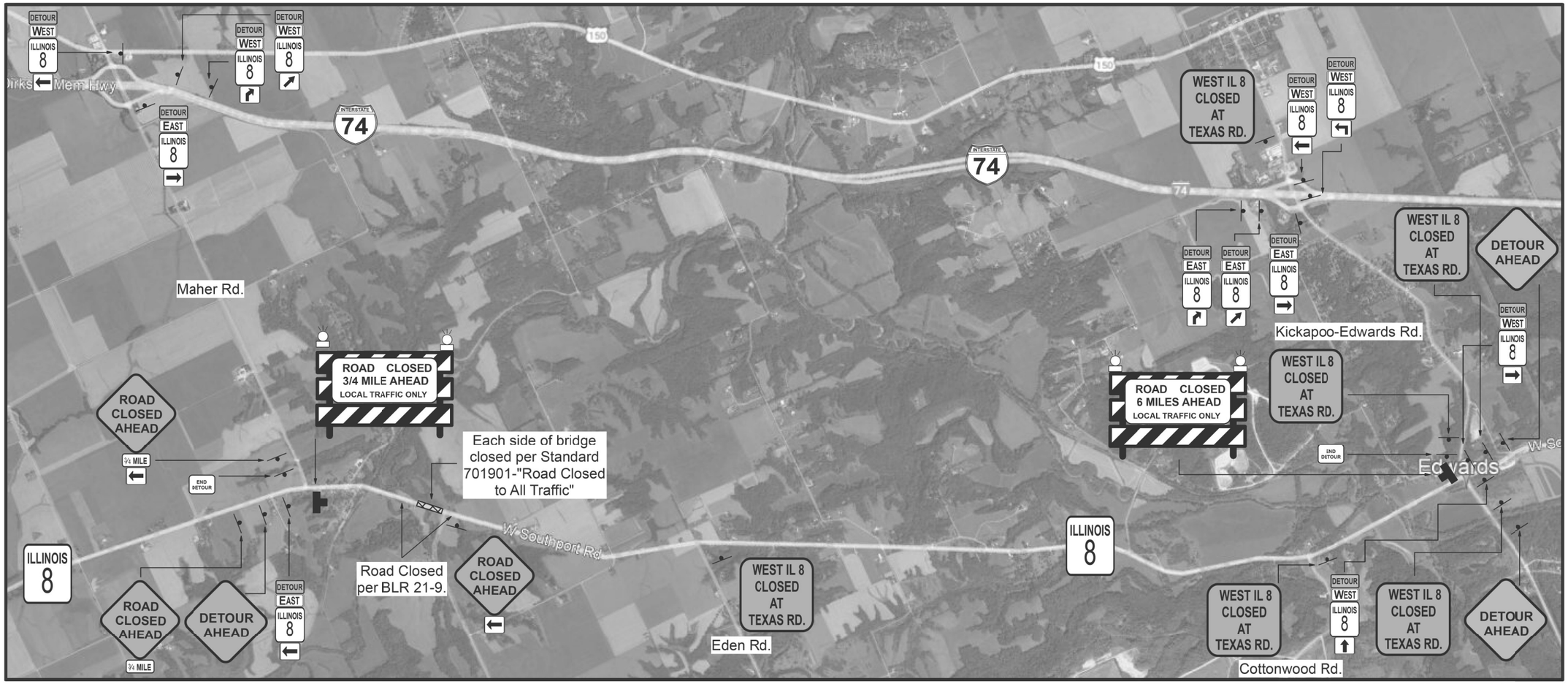

SIGN LEGEND

DETOUR AHEAD	W20-2 (4848)	M5-1L (2115) (BL)	3/4 MILE (2115) (BL)
ROAD CLOSED AHEAD	W20-3 (4848)	M6-2R (2115) (BL)	ILLINOIS 8 (2430) (BL)
WEST IL 8 CLOSED AT TEXAS RD.	BLACK ON ORANGE (4848)	M6-1R (2115) (BL)	END DETOUR M4-8A (2418)
		M6-1L (2115) (BL)	TYPE III BARRICADE WITH SIGN
		M5-2R (2115) (BL)	GROUND MOUNT POST MOUINTED SIGN
		M6-3 (2115) (BL)	
		EAST M3-2 (2115) (BL)	
		WEST M3-4 (2115) (BL)	
		DETOUR M4-8 (2115)	
		ROAD CLOSED XX MILES AHEAD LOCAL TRAFFIC ONLY	R11-3A (6030)

GENERAL NOTES

TWO PCMS SHALL BE PLACED ON EACH SIDE OF THE STRUCTURE FOR 14 DAYS EACH.
THE MESSAGE SIGNS SHALL BE USED TO ADVANCE WARN THE PUBLIC OF THE ANTICIPATED CLOSURE DATE.

ALL SIGNS SHALL BE GROUND POST MOUNTED. TYPICAL SIGN SPACING SHALL BE 500'. SIGNS ON I-74 SHALL BE SPACED AT 1000'. FIELD CONDITIONS AND EXISTING SIGNS MAY ALTER ACTUAL SIGN PLACEMENT.

THE CONTRACTOR SHALL NOTIFY THE DISTRICT TRAFFIC CONTROL SUPERVISOR, DON HOFFMAN 309-671-4488, 21 DAYS IN ADVANCE OF THE ANTICIPATED CLOSURE FOR OVERSIZE LOAD REPORTING.

FILE NAME = D468862-sht-detour.dgn	USER NAME = Kevin.Horst	DESIGNED -	REVISED -	STATE OF ILLINOIS DEPARTMENT OF TRANSPORTATION	TRAFFIC CONTROL AND DETOUR DETAILS IL 8 OVER THE WEST FORK OF KICKAPOO CREEK	F.A.S. RTE.	SECTION	COUNTY	TOTAL SHEETS	SHEET NO.
		DRAWN -	REVISED -			1388	(Z-2C-15D)BR-1	PEORIA	90	16
	PLOT SCALE = 2.0000 ' / in.	CHECKED -	REVISED -					CONTRACT NO. 68862		
Default	PLOT DATE = 3/24/2023	DATE -	REVISED -		SCALE: SHEET OF SHEETS STA. TO STA.		ILLINOIS FED. AID PROJECT			

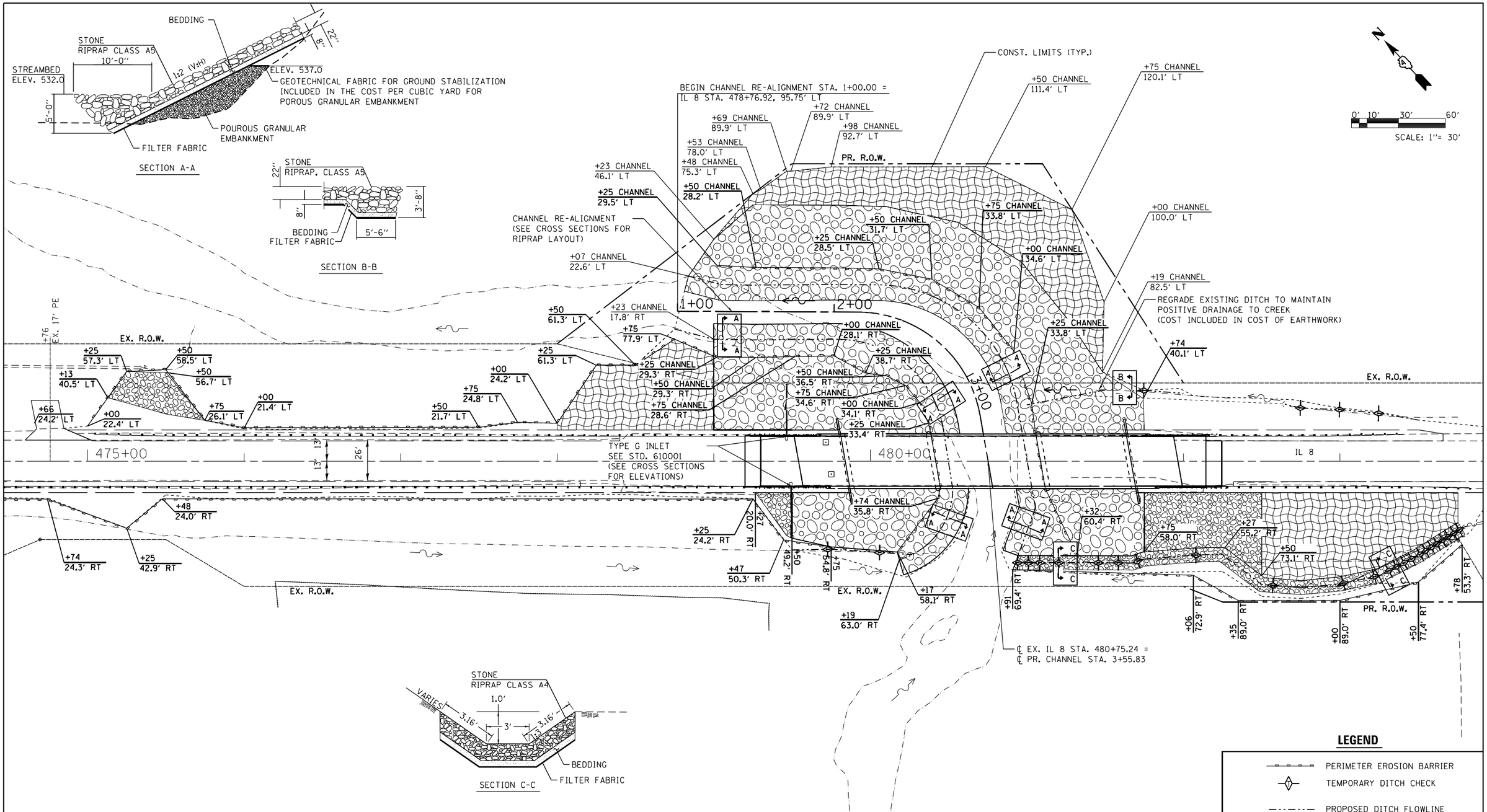

STONE RIPRAP, CLASS A4 AT RT DITCH				
LOCATION	WIDTH (1)	LENGTH	RIPRAP	FABRIC
STA TO STA	LINEAR FEET	LINEAR FEET	SQUARE YARDS	SQUARE YARDS
480+90.96 TO 483+77.65	9.32	300.40	321.4	321.4
		TOTAL	SEE SCHEDULES FOR ADDITIONAL INFORMATION	

(1) WIDTH = 3.16 + 3.00 + 3.16

NOTE:

1. LAYOUT OF SLOPE PROTECTION SYSTEM MAY BE VARIED TO SUIT GROUND CONDITIONS IN THE FIELD AS DIRECTED BY ENGINEER.

2. FOLLOW BRIDGE PLANS FOR PLACEMENT OF RIPRAP ON BRIDGE CONES.

3. PERIMETER EROSION BARRIER AROUND CHANNEL PLACED AT EXISTING WATER SURFACE ELEVATION (536.40).

LEGEND

- PERIMETER EROSION BARRIER
- TEMPORARY DITCH CHECK
- PROPOSED DITCH FLOWLINE
- CONSTRUCTION LIMITS
- HEAVY DUTY EROSION CONTROL BLANKET
- PROPOSED STONE RIPRAP, CLASS A5
- PROPOSED STONE RIPRAP, CLASS A4

FILE NAME = P:\2009\090072\IL 8-Kick\4.CADD\4.2-TR\SHEETS\D468862-sht-eros.dgn	USER NAME = efisher	DESIGNED -	REVISED -
	PLOT SCALE = 60.0000 ' / in.	DRAWN -	REVISED -
Default	PLOT DATE = 6/14/2022	CHECKED -	REVISED -
		DATE -	REVISED -

STATE OF ILLINOIS
DEPARTMENT OF TRANSPORTATION

EROSION CONTROL PLAN
IL 8 OVER THE WEST FORK OF KICKAPOO CREEK

SCALE: 1" = 30' | SHEET 1 OF 1 SHEETS | STA. TO STA.

F.A.S. RTE.	SECTION	COUNTY	TOTAL SHEETS	SHEET NO.
1388	(Z-2C-15D)BR-1	PEORIA	90	17

CONTRACT NO. 68862

ILLINOIS FED. AID PROJECT

N.E.¼ SECTION 7, T. 9 N., R. 6 E. 4TH P.M.

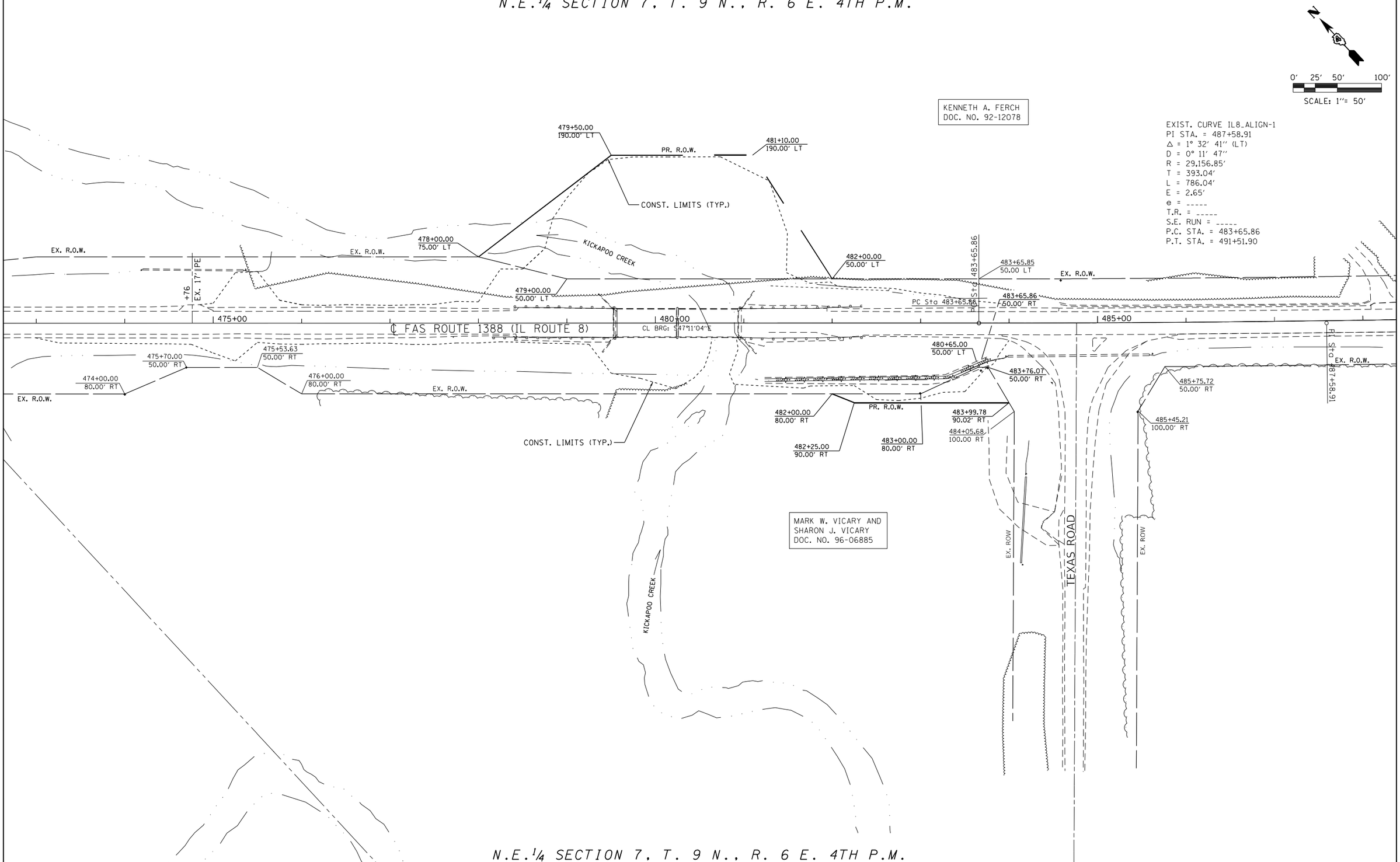

N.E.¼ SECTION 7, T. 9 N., R. 6 E. 4TH P.M.

FILE NAME =	USER NAME = efisher	DESIGNED -	REVISED -
P:\2009\090072\IL 8-Kick\4.CADD\4.1-SU\0468862-sht-rowplan.dgn		DRAWN -	REVISED -
	PLOT SCALE = 100.0000 ' / in.	CHECKED -	REVISED -
Default	PLOT DATE = 6/14/2022	DATE -	REVISED -

STATE OF ILLINOIS
DEPARTMENT OF TRANSPORTATION

RIGHT OF WAY PLAN
IL 8 OVER THE WEST FORK OF KICKAPOO CREEK

SCALE: 1" = 50' | SHEET 1 OF 1 SHEETS | STA. TO STA.

F.A.S. RTE.	SECTION	COUNTY	TOTAL SHEETS	SHEET NO.
1388	(Z-2C-15D)BR-1	PEORIA	90	18
		CONTRACT NO. 68862		
	ILLINOIS	FED. AID PROJECT		

Benchmark: #1 - Existing Brass disk on top of N.E. parapet wall of bridge over Kickapoo Creek, Str. No. 072-0043. Disk Stamped "Elev. = 561.47". Elevation: 561.084' (NAVD 88)

Existing Structure: S.N. 072-0043 was constructed as S.A. Rte. 11 Section Z-2B-15D @ Sta. 279+60 in 1932. The single span steel truss was set on closed abutments. In 1979 the steel truss was replaced by PPC Deck Beams spanning the modified original abutments with a pier added at mid-span. The existing structure is 143'-4" back to back of abutments and 31'-0" wide face to face. The existing bridge is to be removed and replaced. Traffic is to be detoured during construction.

Salvage: None

LOADING HL-93

Allow 50#/sq. ft. for future wearing surface.

DESIGN SPECIFICATIONS

2020 AASHTO LRFD Bridge Design Specifications, 9th Edition

DESIGN STRESSES

FIELD UNITS

f'c = 3,500 psi
f'c = 4,000 psi (superstructure concrete)
fy = 60,000 psi (Reinforcement)
fy = 50,000 psi (M270 Grade 50)

SEISMIC DATA

Seismic Performance Zone (SPZ) = 1
Design Spectral Acceleration at 1.0 sec. (SD1) = 0.108g
Design Spectral Acceleration at 0.2 sec. (SDS) = 0.167g
Soil Site Class = D

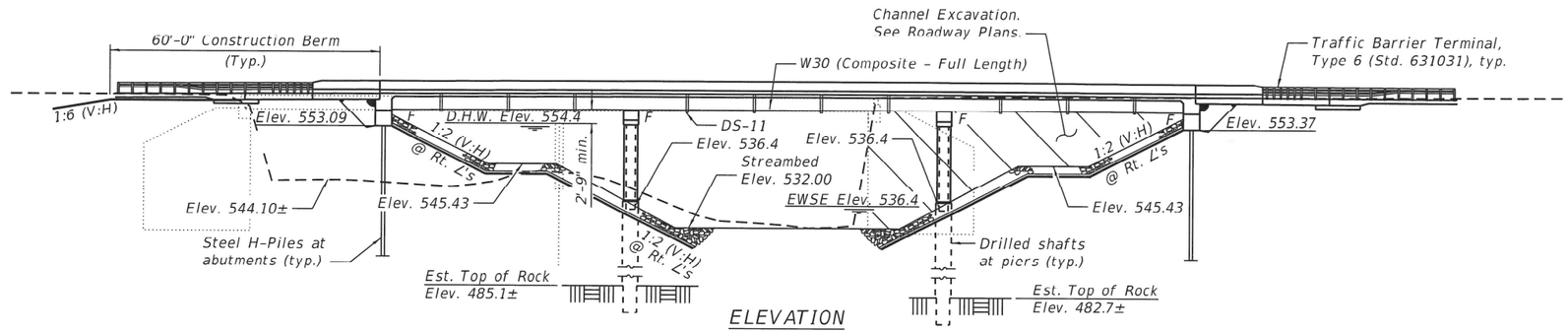

ELEVATION

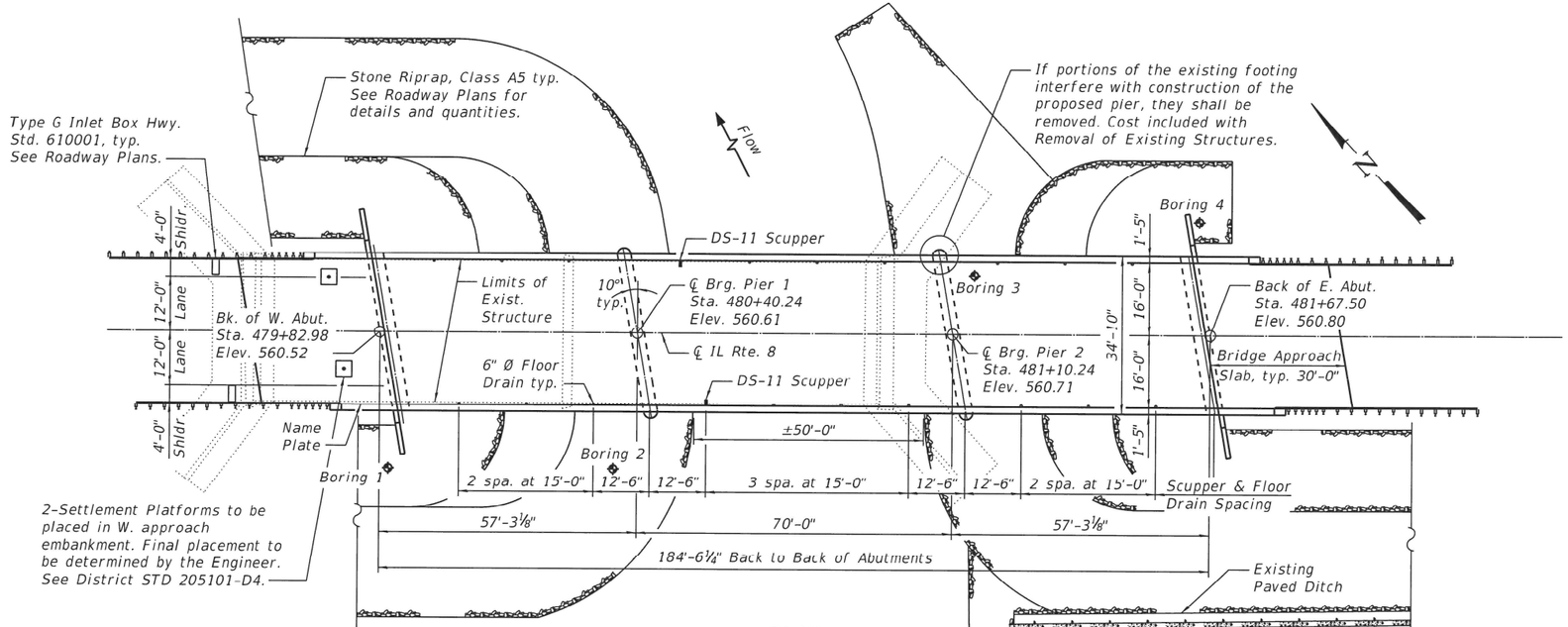

PLAN

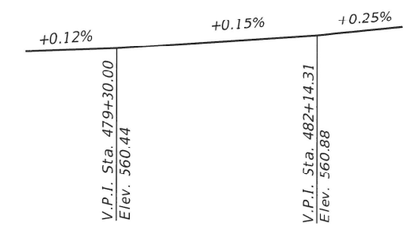

PROFILE GRADE

Along ℄ IL Rte 8

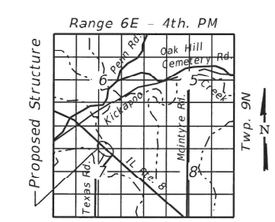

LOCATION SKETCH

DESIGN SCOUR ELEVATION TABLE

Event / Limit State	Design Scour Elevations (ft.)				
	W. Abut.	Pier 1	Pier 2	E. Abut.	Item 113
Q100	553.09	496.85	496.85	553.37	5
Q500	553.09	485.10	483.84	553.37	
Design	553.09	496.85	496.85	553.37	
Check	553.09	485.10	483.84	553.37	

WATERWAY INFORMATION

Drainage Area = 79.8 Sq. Mi. Low Grade Elev. = 560.44 @ Sta. 478+41.36

Flood	Freq. Yr.	Q C.F.S.	Opening Sq. Ft. Exist.	Opening Sq. Ft. Prop.	Nat. H.W.E.	Head - Ft. Exist.	Head - Ft. Prop.	Headwater El. Exist.	Headwater El. Prop.
	10	6,870	1617	1637	551.7	0.3	0.1	552.0	551.8
Design	50	11,000	1969	2017	554.4	0.5	0.3	554.7	554.7
Base	100	12,900	2114	2174	555.4	0.5	0.3	555.9	555.7
Overtopping									
Max. Calc.	500	17,600	2395	2477	557.5	0.9	0.6	558.4	558.1

APPROVED
For Structural Adequacy Only
Engineer of Bridges & Structures

LICENSED STRUCTURAL ENGINEER
ANGELA L. NEMSKY
081-005503
STATE OF ILLINOIS
6/14/2022
Angela L. Nemsky
EXPIRES 11/30/2022

GENERAL PLAN AND ELEVATION
IL RTE 8 OVER W. FORK KICKAPOO CREEK
F.A.S. RT. 1388 SEC. (Z-2C-15D)BR-1
PEORIA COUNTY
STA. 480+75.24
STRUCTURE NO. 072-0231

MODEL: Default
FILE NAME: P:\2019\1903881\W09 - IL 8 Kickapoo CK Update (STRUCTURE)\4 CADD - DWG\4.1 Struc\0720231-68862-01-General Plan and Elevation.dgn

TWM ENGINEERING GEOSPATIAL SERVICES
TWM, INC. WWW.TWM-INC.COM
IL DESIGN FIRM LICENSE NO: 184-001220

USER NAME = jesker	DESIGNED - ANR/NP	REVISED -	
	CHECKED - ALN	REVISED -	
PLOT SCALE = 0.1667 ' / in.	DRAWN - ANR/NP	REVISED -	
PLOT DATE = 6/14/2022	CHECKED - ALN	REVISED -	

STATE OF ILLINOIS
DEPARTMENT OF TRANSPORTATION

GENERAL PLAN & ELEVATION
STRUCTURE NO. 072-0231
SHEET 1 OF 27 SHEETS

F.A.S. RTE.	SECTION	COUNTY	TOTAL SHEETS	SHEET NO.
1388	(Z-2C-15D) BR-1	PEORIA	90	19
		CONTRACT NO. 68862		
		ILLINOIS	FED. AID PROJECT	

GENERAL NOTES:

1. Fasteners shall be ASTM F 3125 Grade A325 Type 1, mechanically galvanized bolts. Bolts 7/8 in. dia., holes 15/16 in. dia., unless otherwise noted.

2. Calculated weight of Structural Steel:
   M 270 Grade 50 = 105,390 pounds
   M 270 Grade 36 = 14,750 pounds

3. No field welding is permitted except as specified in the contract documents.

4. Reinforcement bars designated (E) shall be epoxy coated.

5. Bearing seat surfaces shall be constructed or adjusted to the designated elevations within a tolerance of 1/8 inch (0.01 ft.). Adjustment shall be made either by grinding the surface or by shimming the bearings.

6. The Inorganic Zinc Rich Primer / Acrylic / Acrylic Paint System shall be used for shop and field painting of new structural steel except where otherwise noted. The color of the final finish coat for all interior steel surfaces shall be gray, Munsell No 5B 7/1. The color of the final finish coat for the exterior and bottom flange of the fascia beams shall be gray, Munsell No 5B 7/1.

7. Layout of the slope protection system may be varied to suit ground conditions in the field as directed by the Engineer.

8. The embankment configuration shown shall be the minimum that must be placed and compacted prior to construction of the abutments. Additionally, Settlement Platforms shall be placed as shown on Sheet 1 of 27 at the West approach embankment. See Special Provisions.

9. Slipforming of parapets is not allowed.

INDEX OF SHEETS

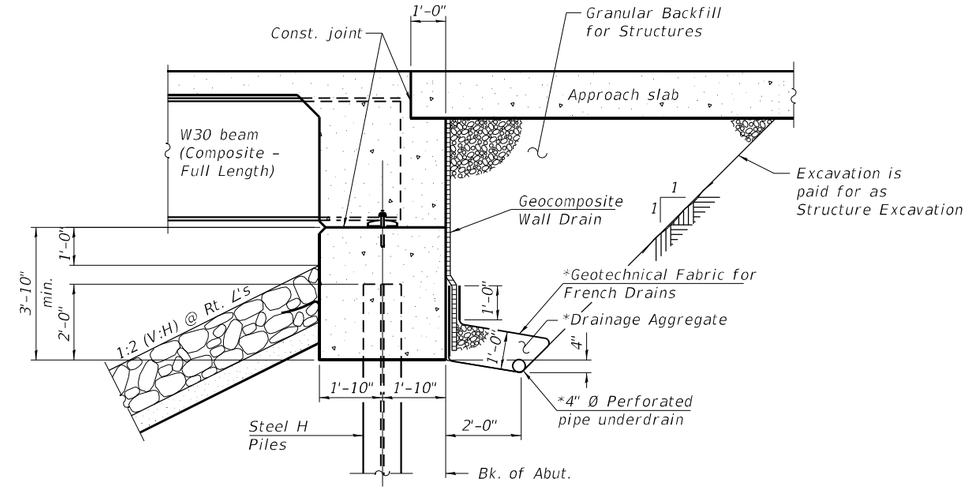

SECTION THRU INTEGRAL ABUTMENT

(Horizontal Dimensions @ Rt. ∠'s)

*Included in the cost of Pipe Underdrains for Structures, 4".

Note:
All drainage system components shall extend to 2'-0" from the end of each wingwall except an outlet pipe shall extend until intersecting with the side slopes. The pipes shall drain into concrete headwalls. (See Article 601.05 of the Standard Specifications and Highway Standard 601101).

STATION 480+75.24
BUILT 20__ BY
STATE OF ILLINOIS
F.A.S. RT. 1388 SEC. (Z-2C-15D)BR-1
LOADING HL-93
STRUCTURE NO. 072-0231

NAME PLATE

See Std. 515001

TOTAL BILL OF MATERIAL

ITEM	UNIT	SUPER	SUB	TOTAL
Granular Backfill for Structures	Cu. Yd.	-	100	100
Removal of Existing Structures	Each	-	-	1
Structure Excavation	Cu. Yd.	-	192	192
Floor Drains	Each	18	-	18
Concrete Structures	Cu. Yd.	-	173.8	173.8
Concrete Superstructure	Cu. Yd.	252.3	-	252.3
Concrete Superstructure (Approach Slab)	Cu. Yd.	97.7	-	97.7
Bridge Deck Grooving	Sq. Yd.	808	-	808
Protective Coat	Sq. Yd.	1,061	-	1,061
Furnishing and Erecting Structural Steel	L. Sum	1	-	1
Stud Shear Connectors	Each	3,366	-	3,366
Reinforcement Bars	Pound	-	27,930	27,930
Reinforcement Bars, Epoxy Coated	Pound	93,210	22,650	115,860
Bar Splicers	Each	-	120	120
Furnishing Steel Piles HP12x53	Foot	-	630	630
Driving Piles	Foot	-	630	630
Test Pile Steel HP12x53	Each	-	2	2
Name Plates	Each	1	-	1
Permanent Casing	Foot	-	321	321
Drilled Shaft in Soil	Cu. Yd.	-	114.5	114.5
Drilled Shaft in Rock	Cu. Yd.	-	30.4	30.4
Anchor Bolts, 3/4"	Each	-	24	24
Anchor Bolts, 1"	Each	-	24	24
Geocomposite Wall Drain	Sq. Yd.	-	66	66
Pipe Underdrains for Structures 4"	Foot	-	154	154
Drainage Scuppers, DS-11	Each	2	-	2
Mechanical Splicers	Each	-	192	192
Asbestos Bearing Pad Removal	Each	-	22	22
Settlement Platforms	Each	-	2	2

See Roadway Schedules for Riprap Quantities.

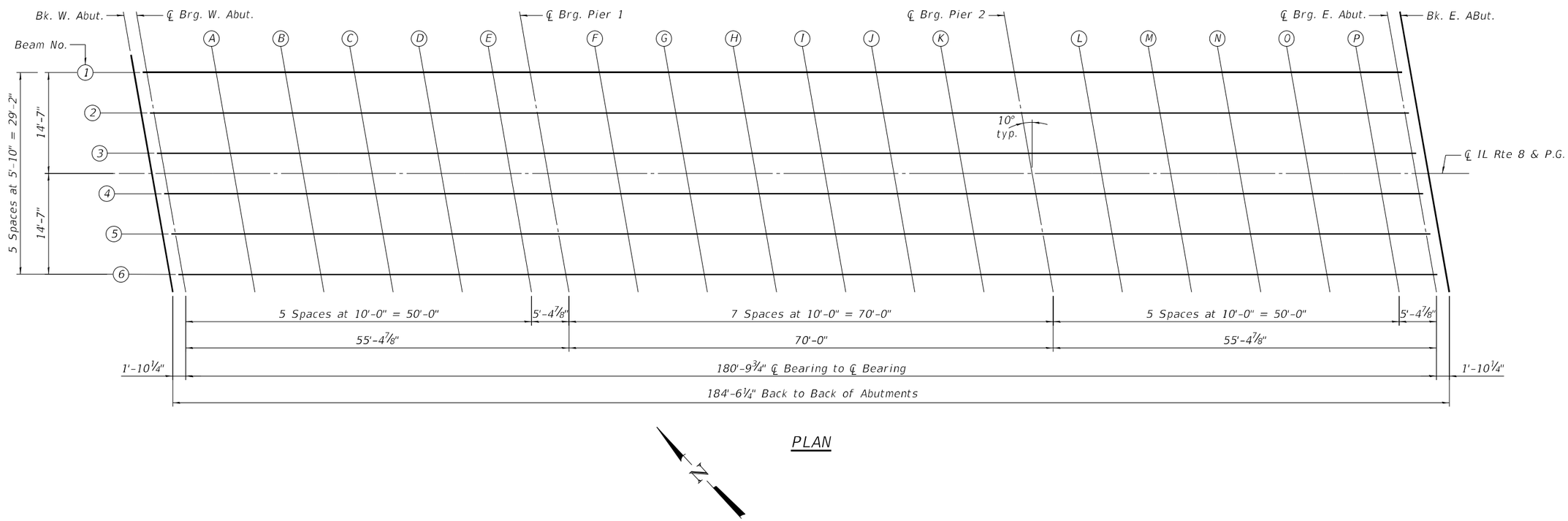

PLAN

MODEL: Default
FILE NAME: P:\2019\190388\WO9 - IL 8 Kickapoo CK Update (STRUCTURE)\4 CADD - DWG\4.4 Struc\0720231-68862-03-Top of Slab Elevations.dgn

TWM ENGINEERING & GEOSPATIAL SERVICES	TWM, INC. WWW.TWM-INC.COM IL DESIGN FIRM LICENSE NO: 184-001220	USER NAME = jesker	DESIGNED - NP	REVISED -	STATE OF ILLINOIS DEPARTMENT OF TRANSPORTATION
			CHECKED - ALN	REVISED -	
		PLOT SCALE = 0.1667 ' / in.	DRAWN - NP	REVISED -	
		PLOT DATE = 6/14/2022	CHECKED - ALN	REVISED -	

TOP OF SLAB ELEVATIONS
STRUCTURE NO. 072-0231

SHEET 3 OF 27 SHEETS

F.A.S. RTE.	SECTION	COUNTY	TOTAL SHEETS	SHEET NO.
1388	(Z-2C-15D) BR-1	PEORIA	90	21
		CONTRACT NO. 68862		
		ILLINOIS	FED. AID PROJECT	

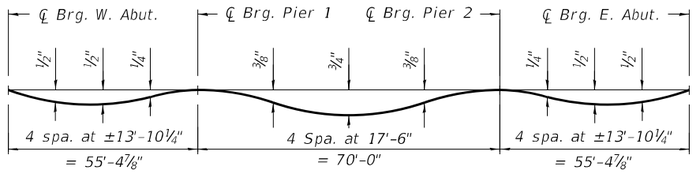

DEAD LOAD DEFLECTION DIAGRAM BEAMS 1 - 6

(Includes weight of concrete only.)

Note:
The above deflections are not to be used in the field if the engineer is working from the grade elevations adjusted for dead load deflections as shown below.

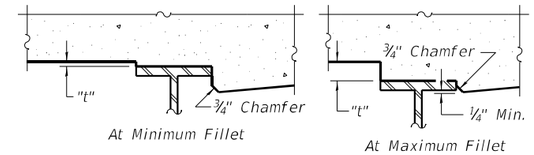

To determine "t": After all structural steel has been erected, elevations of the top flanges of the beams shall be taken at intervals as shown on sheet 3 of 27. These elevations subtracted from the "Theoretical Grade Elevations Adjusted for Dead Load Deflection" shown below, minus slab thickness, equals the fillet heights "t" above top flange of beams.

FILLET HEIGHTS

BEAM 1

Location	Station	Offset	Theoretical Grade Elevations	Theoretical Grade Elevations Adjusted for Dead Load Deflection
Bk. W. Abut.	479+80.41	-14.58	560.27	560.27
℄ Brg. W. Abut.	479+82.27	-14.58	560.28	560.28
A	479+92.27	-14.58	560.29	560.32
B	480+02.27	-14.58	560.31	560.35
C	480+12.27	-14.58	560.32	560.36
D	480+22.27	-14.58	560.34	560.36
E	480+32.27	-14.58	560.35	560.36
℄ Brg. Pier 1	480+37.68	-14.58	560.36	560.36
F	480+47.68	-14.58	560.38	560.39
G	480+57.68	-14.58	560.39	560.43
H	480+67.68	-14.58	560.41	560.47
I	480+77.68	-14.58	560.42	560.48
J	480+87.68	-14.58	560.44	560.48
K	480+97.68	-14.58	560.45	560.47
℄ Brg. Pier 2	481+07.68	-14.58	560.47	560.47
L	481+17.68	-14.58	560.48	560.49
M	481+27.68	-14.58	560.50	560.53
N	481+37.68	-14.58	560.51	560.56
O	481+47.68	-14.58	560.53	560.57
P	481+57.68	-14.58	560.54	560.56
℄ Brg. E. Abut.	481+63.08	-14.58	560.55	560.55
Bk. E. Abut.	481+64.94	-14.58	560.55	560.55

BEAM 2

Location	Station	Offset	Theoretical Grade Elevations	Theoretical Grade Elevations Adjusted for Dead Load Deflection
Bk. W. Abut.	479+81.44	-8.75	560.38	560.38
℄ Brg. W. Abut.	479+83.30	-8.75	560.38	560.38
A	479+93.30	-8.75	560.40	560.43
B	480+03.30	-8.75	560.41	560.46
C	480+13.30	-8.75	560.43	560.47
D	480+23.30	-8.75	560.44	560.47
E	480+33.30	-8.75	560.46	560.46
℄ Brg. Pier 1	480+38.71	-8.75	560.47	560.47
F	480+48.71	-8.75	560.48	560.50
G	480+58.71	-8.75	560.50	560.54
H	480+68.71	-8.75	560.51	560.57
I	480+78.71	-8.75	560.53	560.59
J	480+88.71	-8.75	560.54	560.58
K	480+98.71	-8.75	560.56	560.57
℄ Brg. Pier 2	481+08.71	-8.75	560.57	560.57
L	481+18.71	-8.75	560.59	560.60
M	481+28.71	-8.75	560.60	560.63
N	481+38.71	-8.75	560.62	560.66
O	481+48.71	-8.75	560.63	560.67
P	481+58.71	-8.75	560.65	560.66
℄ Brg. E. Abut.	481+64.11	-8.75	560.66	560.66
Bk. E. Abut.	481+65.97	-8.75	560.66	560.66

BEAM 3

Location	Station	Offset	Theoretical Grade Elevations	Theoretical Grade Elevations Adjusted for Dead Load Deflection
Bk. W. Abut.	479+82.47	-2.92	560.47	560.47
℄ Brg. W. Abut.	479+84.33	-2.92	560.48	560.48
A	479+94.33	-2.92	560.49	560.52
B	480+04.33	-2.92	560.51	560.55
C	480+14.33	-2.92	560.52	560.56
D	480+24.33	-2.92	560.54	560.56
E	480+34.33	-2.92	560.55	560.55
℄ Brg. Pier 1	480+39.73	-2.92	560.56	560.56
F	480+49.73	-2.92	560.57	560.59
G	480+59.73	-2.92	560.59	560.63
H	480+69.73	-2.92	560.60	560.66
I	480+79.73	-2.92	560.62	560.68
J	480+89.73	-2.92	560.63	560.68
K	480+99.73	-2.92	560.65	560.67
℄ Brg. Pier 2	481+09.73	-2.92	560.66	560.66
L	481+19.73	-2.92	560.68	560.69
M	481+29.73	-2.92	560.69	560.73
N	481+39.73	-2.92	560.71	560.75
O	481+49.73	-2.92	560.73	560.76
P	481+59.73	-2.92	560.74	560.76
℄ Brg. E. Abut.	481+65.14	-2.92	560.75	560.75
Bk. E. Abut.	481+67.00	-2.92	560.75	560.75

℄ IL RTE 8 & PROFILE GRADE

Location	Station	Offset	Theoretical Grade Elevations	Theoretical Grade Elevations Adjusted for Dead Load Deflection
Bk. W. Abut.	479+82.98	0.00	560.52	560.52
℄ Brg. W. Abut.	479+84.84	0.00	560.52	560.52
A	479+94.84	0.00	560.54	560.57
B	480+04.84	0.00	560.55	560.60
C	480+14.84	0.00	560.57	560.61
D	480+24.84	0.00	560.58	560.60
E	480+34.84	0.00	560.60	560.60
℄ Brg. Pier 1	480+40.24	0.00	560.61	560.61
F	480+50.24	0.00	560.62	560.64
G	480+60.24	0.00	560.64	560.68
H	480+70.24	0.00	560.65	560.71
I	480+80.24	0.00	560.67	560.73
J	480+90.24	0.00	560.68	560.72
K	481+00.24	0.00	560.70	560.71
℄ Brg. Pier 2	481+10.24	0.00	560.71	560.71
L	481+20.24	0.00	560.73	560.74
M	481+30.24	0.00	560.74	560.77
N	481+40.24	0.00	560.76	560.80
O	481+50.24	0.00	560.77	560.81
P	481+60.24	0.00	560.79	560.80
℄ Brg. E. Abut.	481+65.65	0.00	560.79	560.79
Bk. E. Abut.	481+67.50	0.00	560.80	560.80

BEAM 4

Location	Station	Offset	Theoretical Grade Elevations	Theoretical Grade Elevations Adjusted for Dead Load Deflection
Bk. W. Abut.	479+83.49	2.92	560.47	560.47
℄ Brg. W. Abut.	479+85.36	2.92	560.48	560.48
A	479+95.36	2.92	560.49	560.52
B	480+05.36	2.92	560.51	560.55
C	480+15.36	2.92	560.52	560.56
D	480+25.36	2.92	560.54	560.56
E	480+35.36	2.92	560.55	560.56
℄ Brg. Pier 1	480+40.76	2.92	560.56	560.56
F	480+50.76	2.92	560.58	560.59
G	480+60.76	2.92	560.59	560.63
H	480+70.76	2.92	560.61	560.67
I	480+80.76	2.92	560.62	560.68
J	480+90.76	2.92	560.64	560.68
K	481+00.76	2.92	560.65	560.67
℄ Brg. Pier 2	481+10.76	2.92	560.67	560.67
L	481+20.76	2.92	560.68	560.69
M	481+30.76	2.92	560.70	560.73
N	481+40.76	2.92	560.71	560.76
O	481+50.76	2.92	560.73	560.77
P	481+60.76	2.92	560.74	560.76
℄ Brg. E. Abut.	481+66.17	2.92	560.75	560.75
Bk. E. Abut.	481+68.03	2.92	560.75	560.75

BEAM 5

Location	Station	Offset	Theoretical Grade Elevations	Theoretical Grade Elevations Adjusted for Dead Load Deflection
Bk. W. Abut.	479+84.52	8.75	560.39	560.39
℄ Brg. W. Abut.	479+86.38	8.75	560.39	560.39
A	479+96.38	8.75	560.40	560.43
B	480+06.38	8.75	560.42	560.46
C	480+16.38	8.75	560.43	560.47
D	480+26.38	8.75	560.45	560.47
E	480+36.38	8.75	560.46	560.47
℄ Brg. Pier 1	480+41.79	8.75	560.47	560.47
F	480+51.79	8.75	560.49	560.50
G	480+61.79	8.75	560.50	560.54
H	480+71.79	8.75	560.52	560.58
I	480+81.79	8.75	560.53	560.59
J	480+91.79	8.75	560.55	560.59
K	481+01.79	8.75	560.56	560.58
℄ Brg. Pier 2	481+11.79	8.75	560.58	560.58
L	481+21.79	8.75	560.59	560.60
M	481+31.79	8.75	560.61	560.64
N	481+41.79	8.75	560.62	560.67
O	481+51.79	8.75	560.64	560.68
P	481+61.79	8.75	560.65	560.67
℄ Brg. E. Abut.	481+67.20	8.75	560.66	560.66
Bk. E. Abut.	481+69.06	8.75	560.66	560.66

BEAM 6

Location	Station	Offset	Theoretical Grade Elevations	Theoretical Grade Elevations Adjusted for Dead Load Deflection
Bk. W. Abut.	479+85.55	14.58	560.28	560.28
℄ Brg. W. Abut.	479+87.41	14.58	560.29	560.29
A	479+97.41	14.58	560.30	560.33
B	480+07.41	14.58	560.32	560.36
C	480+17.41	14.58	560.33	560.37
D	480+27.41	14.58	560.35	560.37
E	480+37.41	14.58	560.36	560.36
℄ Brg. Pier 1	480+42.82	14.58	560.37	560.37
F	480+52.82	14.58	560.38	560.40
G	480+62.82	14.58	560.40	560.44
H	480+72.82	14.58	560.41	560.47
I	480+82.82	14.58	560.43	560.49
J	480+92.82	14.58	560.44	560.49
K	481+02.82	14.58	560.46	560.47
℄ Brg. Pier 2	481+12.82	14.58	560.47	560.47
L	481+22.82	14.58	560.49	560.50
M	481+32.82	14.58	560.50	560.54
N	481+42.82	14.58	560.52	560.56
O	481+52.82	14.58	560.53	560.57
P	481+62.82	14.58	560.55	560.57
℄ Brg. E. Abut	481+68.23	14.58	560.56	560.56
Bk. E. Abut.	481+70.09	14.58	560.56	560.56

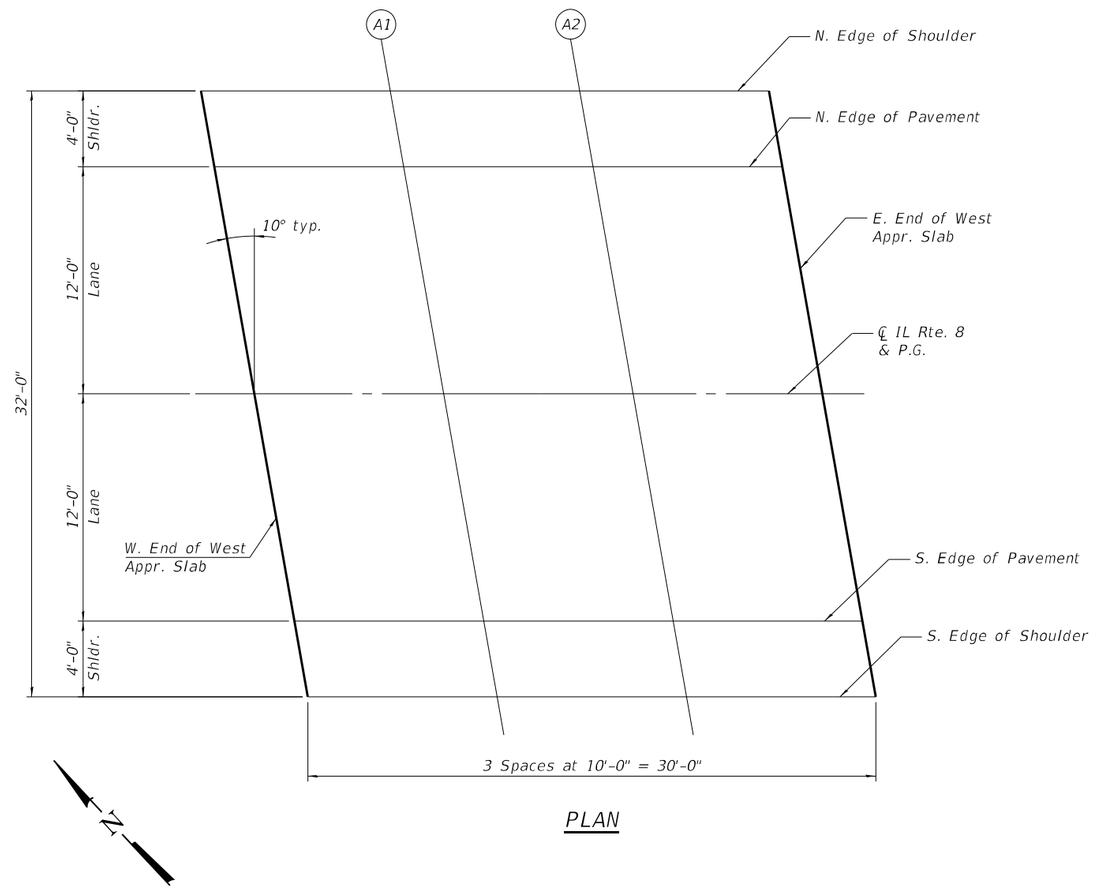

PLAN

NORTH EDGE OF SHOULDER

Location	Station	Offset	Theoretical Grade Elevations
W. End of W. Approach	479+51.17	-16.00	560.20
A1	479+61.17	-16.00	560.22
A2	479+71.17	-16.00	560.23
E. End of W. Approach	479+81.17	-16.00	560.25

NORTH EDGE OF PAVEMENT

Location	Station	Offset	Theoretical Grade Elevations
W. End of W. Approach	479+51.88	-12.00	560.29
A1	479+61.88	-12.00	560.30
A2	479+71.88	-12.00	560.32
E. End of W. Approach	479+81.88	-12.00	560.33

℄ ROADWAY & P.G.

Location	Station	Offset	Theoretical Grade Elevations
W. End of W. Approach	479+53.99	00.00	560.48
A1	479+63.99	00.00	560.49
A2	479+73.99	00.00	560.51
E. End of W. Approach	479+83.99	00.00	560.52

SOUTH EDGE OF PAVEMENT

Location	Station	Offset	Theoretical Grade Elevations
W. End of W. Approach	479+56.11	12.00	560.29
A1	479+66.11	12.00	560.31
A2	479+76.11	12.00	560.32
E. End of W. Approach	479+86.11	12.00	560.34

SOUTH EDGE OF SHOULDER

Location	Station	Offset	Theoretical Grade Elevations
W. End of W. Approach	479+56.82	16.00	560.21
A1	479+66.82	16.00	560.22
A2	479+76.82	16.00	560.24
E. End of W. Approach	479+86.82	16.00	560.25

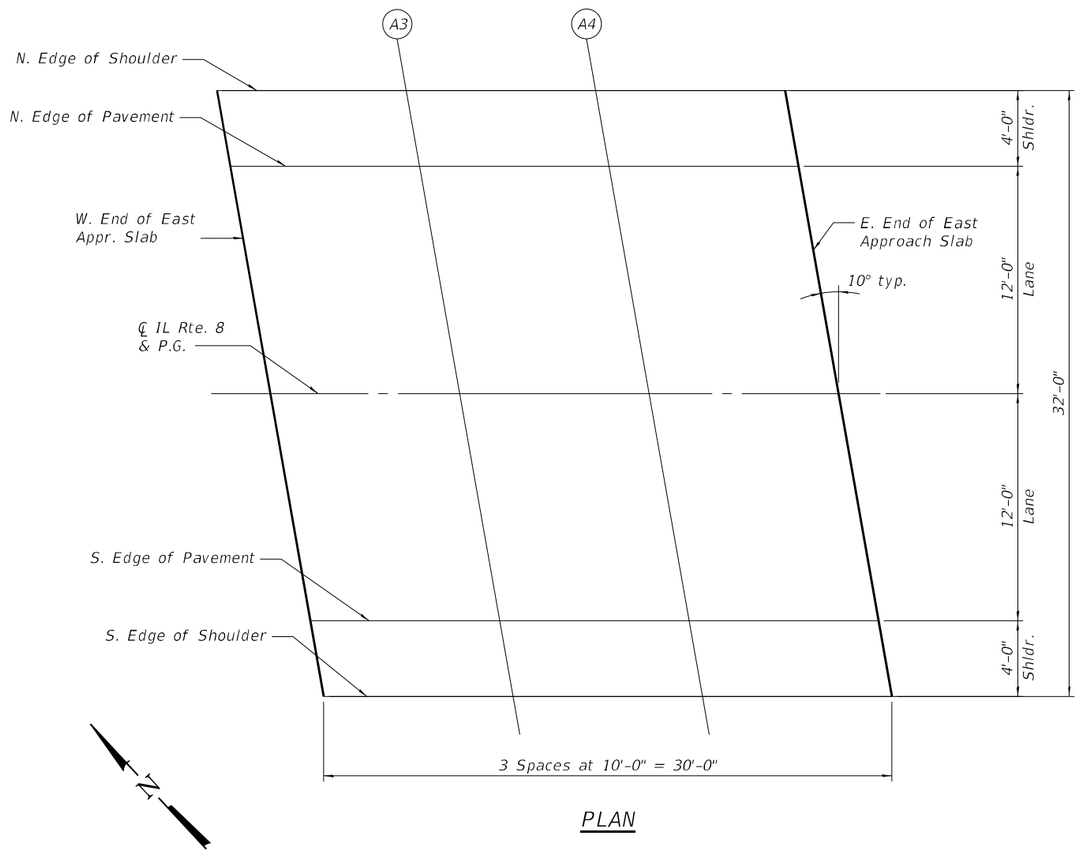

PLAN

NORTH EDGE OF SHOULDER

Location	Station	Offset	Theoretical Grade Elevations
W. End of E. Approach	481+63.66	-16.00	560.52
A3	481+73.66	-16.00	560.53
A4	481+83.66	-16.00	560.55
E. End of E. Approach	481+93.66	-16.00	560.56

NORTH EDGE OF PAVEMENT

Location	Station	Offset	Theoretical Grade Elevations
W. End of E. Approach	481+64.37	-12.00	560.60
A3	481+74.37	-12.00	560.62
A4	481+84.37	-12.00	560.63
E. End of E. Approach	481+94.37	-12.00	560.65

℄ ROADWAY & P.G.

Location	Station	Offset	Theoretical Grade Elevations
W. End of E. Approach	481+66.48	00.00	560.79
A3	481+76.48	00.00	560.81
A4	481+86.48	00.00	560.82
E. End of E. Approach	481+96.48	00.00	560.84

SOUTH EDGE OF PAVEMENT

Location	Station	Offset	Theoretical Grade Elevations
W. End of E. Approach	481+68.60	12.00	560.61
A3	481+78.60	12.00	560.63
A4	481+88.60	12.00	560.64
E. End of E. Approach	481+98.60	12.00	560.66

SOUTH EDGE OF SHOULDER

Location	Station	Offset	Theoretical Grade Elevations
W. End of E. Approach	481+69.31	16.00	560.53
A3	481+79.31	16.00	560.54
A4	481+89.31	16.00	560.56
E. End of E. Approach	481+99.31	16.00	560.57

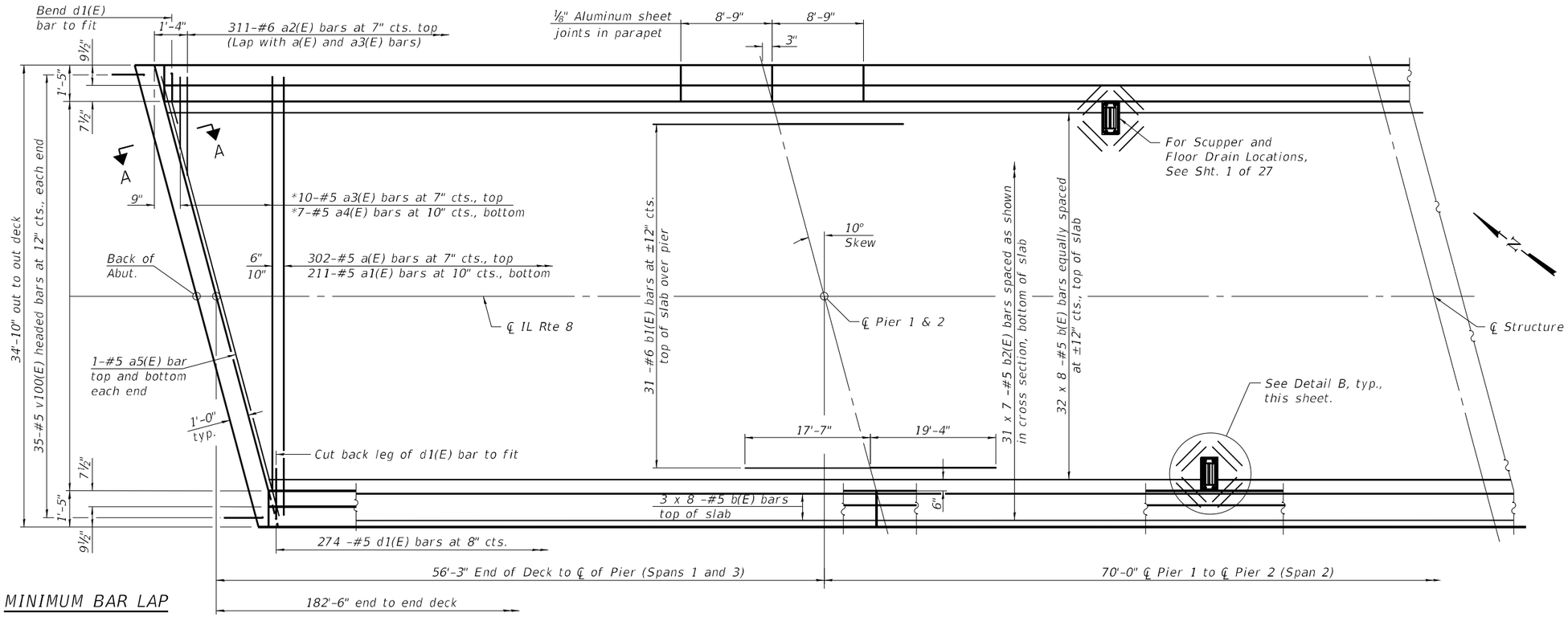

PARTIAL PLAN

MINIMUM BAR LAP

#5 bar = 3'-6"

* See Field Cutting Diagram on sheet 8 of 27.

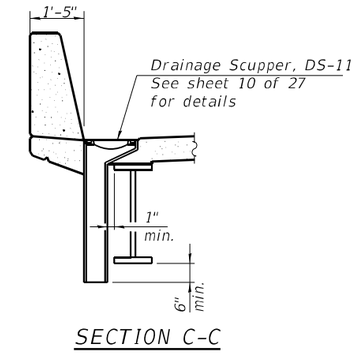

SECTION C-C

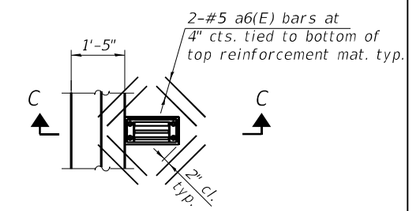

DETAIL B

Note:
Cut longitudinal reinforcement to clear drainage scuppers.

Notes:
See sheet 8 of 27 for superstructure details and Bill of Material.
Bars indicated thus 20 x 3-#5 etc. indicates 20 lines of bars with 3 lengths per line.
See sheet 9 of 27 for Section A-A.

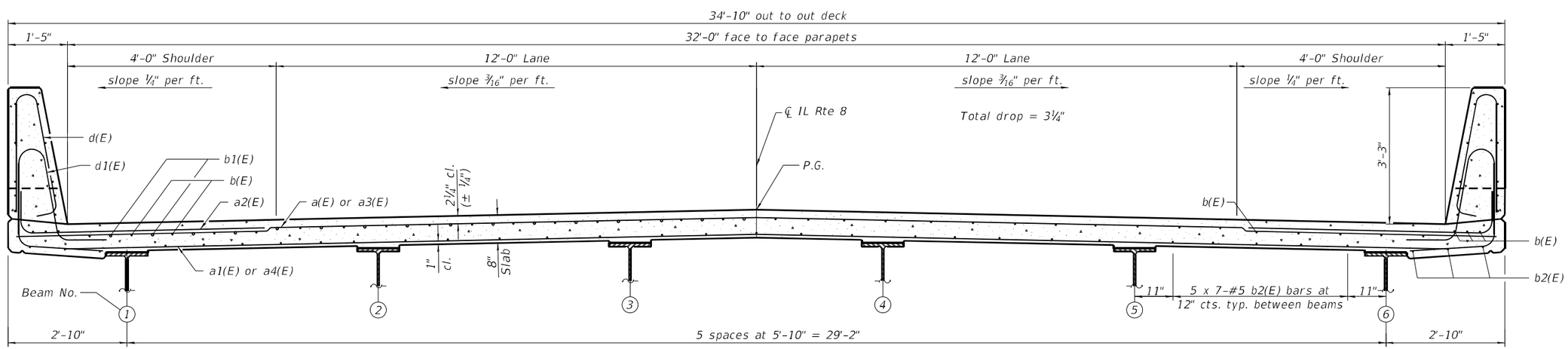

NEAR PIER

NEAR MIDSPAN

CROSS SECTION

(Looking East)

SI-SB-2-R(≤30°) 6-15-2019

MODEL: Default
FILE NAME: P:\2019\190388\WO9 - IL 8 Kickapoo CK Update (STRUCTURE)\4 CADD - DWG\4.4 Struc\0720231-68862-07-Superstructure-Plan & Cross Section.dgn

TWM ENGINEERING GEOSPATIAL SERVICES	TWM, INC. WWW.TWM-INC.COM IL DESIGN FIRM LICENSE NO. 184-001220	USER NAME = jesker	DESIGNED - CAJ	REVISED -	STATE OF ILLINOIS DEPARTMENT OF TRANSPORTATION	SUPERSTRUCTURE STRUCTURE NO. 072-0231	F.A.S. RTE.	SECTION	COUNTY	TOTAL SHEETS	SHEET NO.
			CHECKED - ALN	REVISED -			1388	(Z-2C-15D) BR-1	PEORIA	90	25
		PLOT SCALE = 0.1667 ' / in.	DRAWN - CAJ	REVISED -			CONTRACT NO. 68862				
		PLOT DATE = 6/14/2022	CHECKED - ALN	REVISED -		SHEET 7 OF 27 SHEETS	ILLINOIS	FED. AID PROJECT			

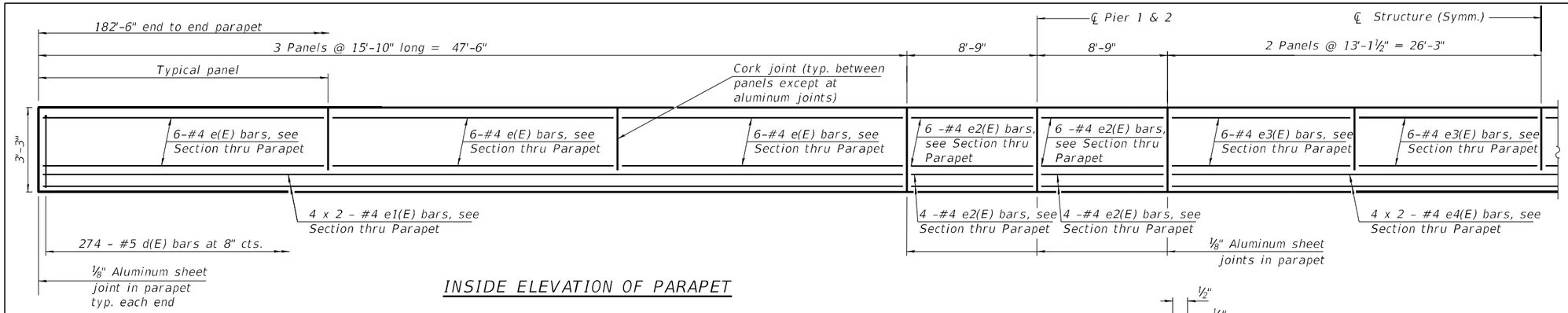

INSIDE ELEVATION OF PARAPET

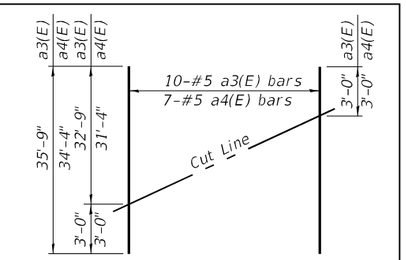

FIELD CUTTING DIAGRAM

Order a3(E) and a4(E) bars full length. Cut as shown and use remainder of bars in opposite end of deck.

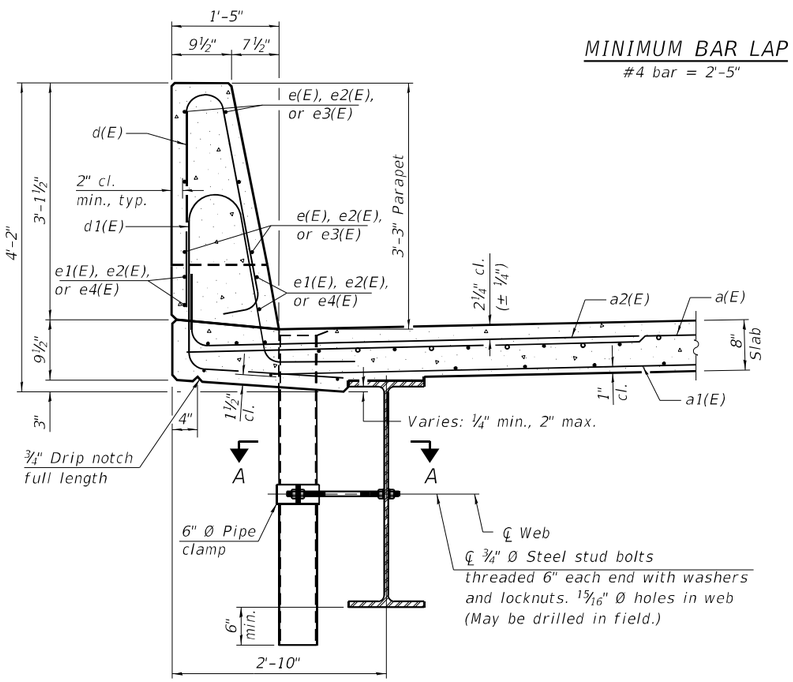

MINIMUM BAR LAP

#4 bar = 2'-5"

SECTION THRU PARAPET

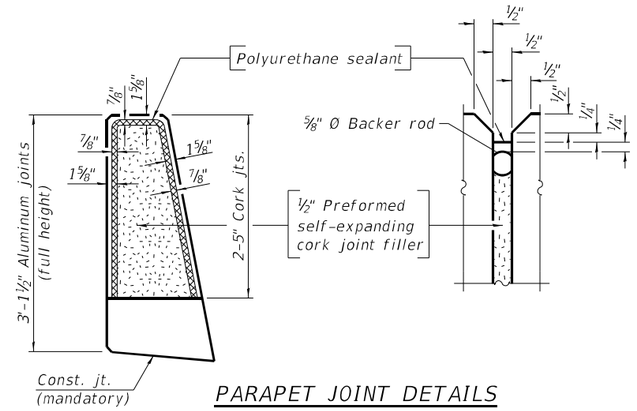

PARAPET JOINT DETAILS

Notes:

Fiberglass pipe shall conform to ASTM D2996, with short-time rupture strength hoop tensile stress of 30,000 p.s.i. minimum.

The exterior surfaces of the floor drains shall be painted according to Article 506 with the finish coat as specified. The exterior surfaces of the drains shall be cleaned according to the Society of Protective Coating's Spec. SSPC-SP1 prior to painting.

The top portion of aluminum floor drains shall be coated to minimize reaction with wet concrete.

The clamping device shall be galvanized according to AASHTO M 232. Cost of clamping device included with Floor Drains.

The ⅛" aluminum sheet shall be ASTM B 209 alloy 3003-H14 and coated to minimize reaction with wet concrete. Cost included with Concrete Superstructure.

The polyurethane sealant shall be according to Article 1050.04 of the Std. Spec. and the color shall be gray.

Headed bars shall conform to ASTM A970 with threaded attachment; Class HA; and reinforcement bars conforming to ASTM A706. Cost included with Reinforcement Bars, Epoxy Coated.

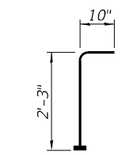

BAR v100(E)

(Headed)

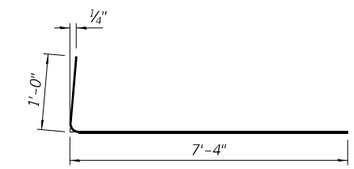

BAR a2(E)

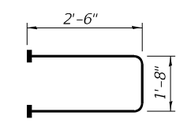

BAR s10(E)

(Headed)

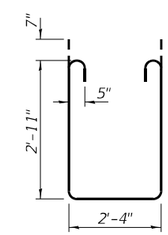

BAR s11(E)

SUPERSTRUCTURE BILL OF MATERIAL

Bar	No.	Size	Length	Shape
a(E)	302	#5	34'-6"	
a1(E)	211	#5	32'-10"	
a2(E)	622	#6	8'-4"	
a3(E)	10	#5	35'-9"	
a4(E)	7	#5	34'-4"	
a5(E)	4	#5	35'-0"	
a6(E)	16	#5	1'-6"	
b(E)	304	#5	25'-11"	
b1(E)	62	#6	36'-11"	
b2(E)	217	#5	29'-1"	
d(E)	548	#5	6'-5"	
d1(E)	548	#5	8'-2"	
e(E)	72	#4	15'-6"	
e1(E)	32	#4	24'-10"	
e2(E)	80	#4	8'-5"	
e3(E)	48	#4	12'-9"	
e4(E)	16	#4	27'-4"	
m10(E)	8	#6	35'-0"	
m11(E)	30	#6	5'-6"	
m12(E)	12	#6	2'-6"	
s10(E)	72	#5	6'-8"	
s11(E)	72	#5	9'-4"	
v100(E)	70	#5	3'-1"	
Reinforcement Bars, Epoxy Coated			Lbs.	57,820
Concrete Superstructure			Cu. Yds.	244.5

Bars indicated thus 1 x 2-#4 etc. indicates 1 line of bars with 2 lengths per line.

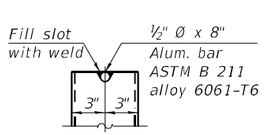

ALUMINUM TUBE

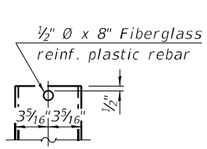

FIBERGLASS PIPE

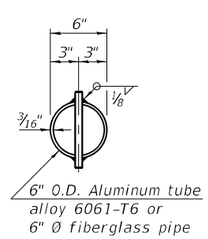

TOP PLAN

(Showing aluminum tube)

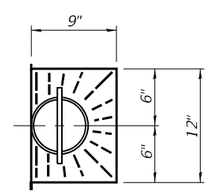

TOP PLAN

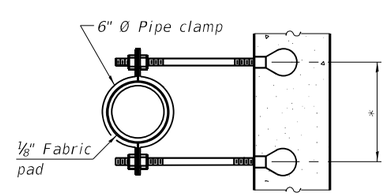

SECTION A-A

*Dimension as required by pipe clamp

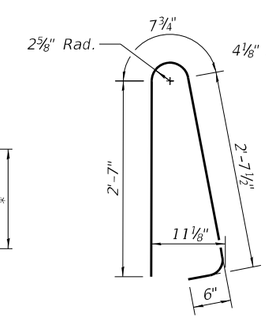

BAR d(E)

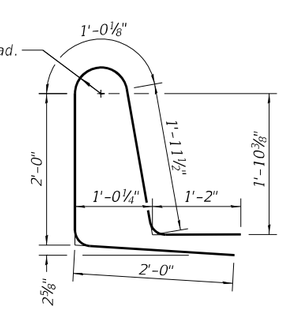

BAR d1(E)

SDI-SB-2 6-15-2019

MODEL: Default
FILE NAME: P:\2019\190388\WO9 - IL 8 Kickapoo CK Update (STRUCTURE)\4 CADD - DWG\4.4 Struc\0720231-68862-08-Superstructure-Details.dgn

TWM ENGINEERING & GEOSPATIAL SERVICES — TWM, INC. WWW.TWM-INC.COM — IL DESIGN FIRM LICENSE NO: 184-001220	USER NAME = jesker	DESIGNED - CAJ	REVISED -	STATE OF ILLINOIS DEPARTMENT OF TRANSPORTATION
		CHECKED - ALN	REVISED -	
	PLOT SCALE = 0.1667 ' / in.	DRAWN - CAJ	REVISED -	
	PLOT DATE = 6/14/2022	CHECKED - ALN	REVISED -	

SUPERSTRUCTURE DETAILS
STRUCTURE NO. 072-0231

SHEET 8 OF 27 SHEETS

F.A.S. RTE.	SECTION	COUNTY	TOTAL SHEETS	SHEET NO.
1388	(Z-2C-15D) BR-1	PEORIA	90	26
		CONTRACT NO. 68862		
		ILLINOIS	FED. AID PROJECT	

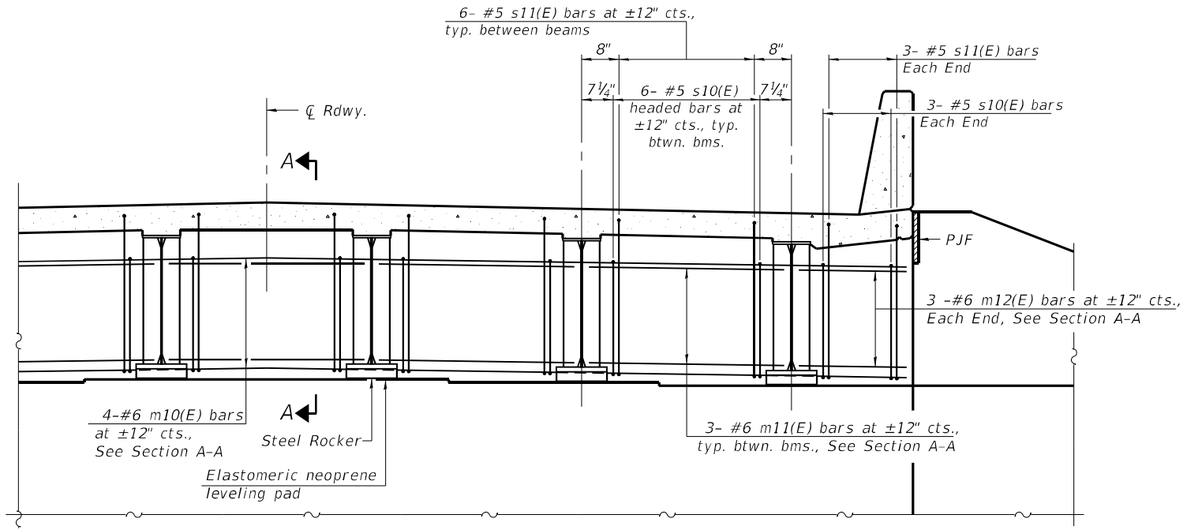

DIAPHRAGM AT ABUTMENT

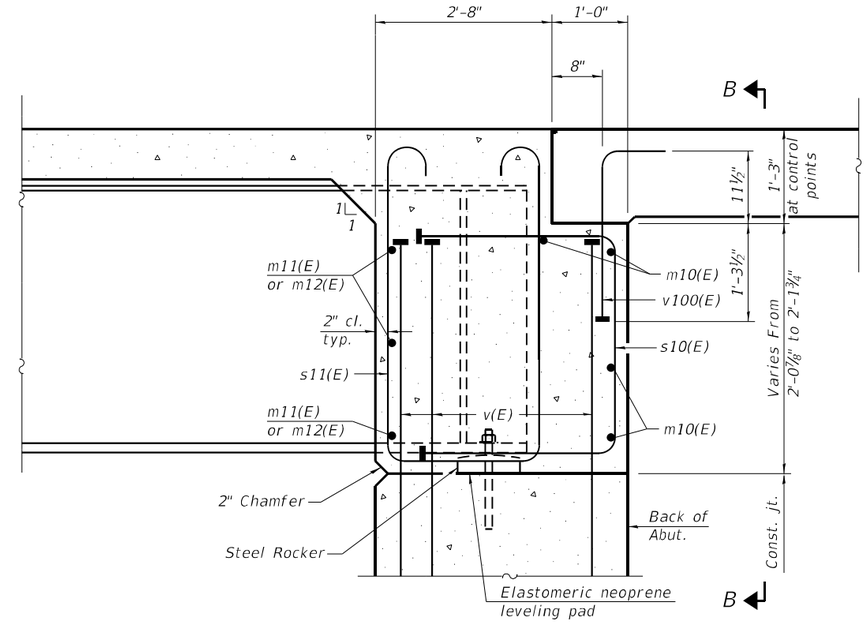

SECTION A-A
(at Rt. ∠'s)

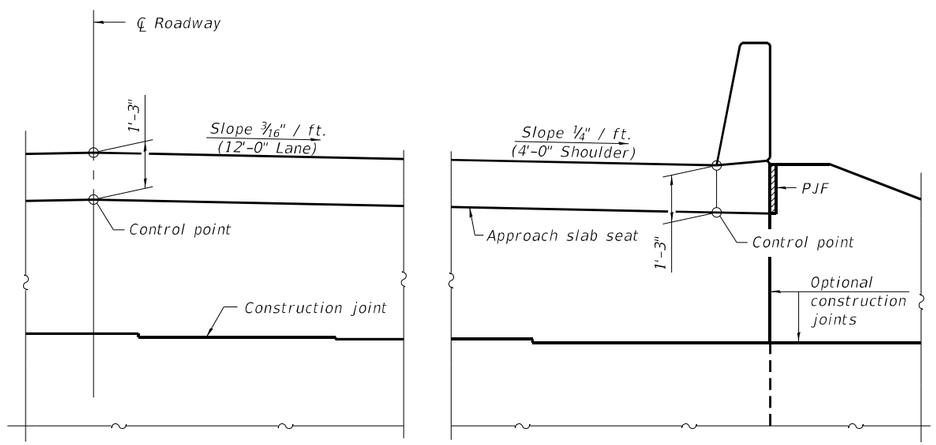

VIEW B-B

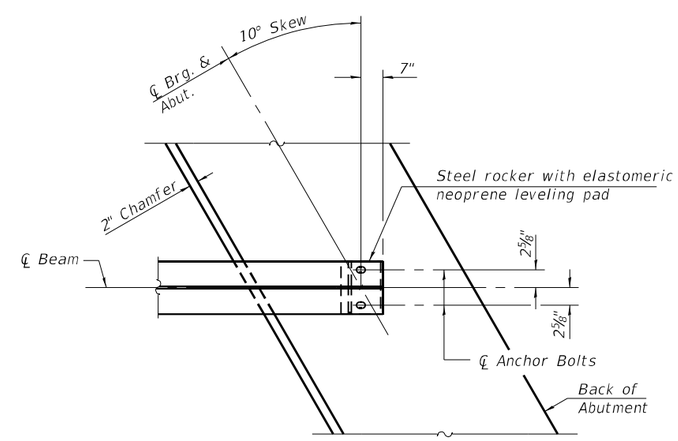

PLAN AT ABUTMENT
(Showing bottom flange of beam)

Notes:
See sheet 8 of 27 for superstructure details and Bill of Material.
See sheet 11 of 27 for PJF details.
The s10(E) and s11(E) bars shall be placed parallel to the beams. Spacing for these bars shall be at right angles to the beams.
The approach slab seat shall have a constant slope determined from the control points shown.

DIA-SB-R 06-15-2019

MODEL: Default
FILE NAME: P:\2019\190388\W09 - IL 8 Kickapoo CK Update (STRUCTURE)\4 CADD - DWG\4.4 Struc\0720231-68862-09-Diaphragm Details -.dgn

TWM ENGINEERING GEOSPATIAL SERVICES	TWM, INC. WWW.TWM-INC.COM IL DESIGN FIRM LICENSE NO: 184-001220	USER NAME = jesker	DESIGNED - CAJ	REVISED -	STATE OF ILLINOIS DEPARTMENT OF TRANSPORTATION
			CHECKED - ALN	REVISED -	
		PLOT SCALE = 0.1667 ' / in.	DRAWN - CAJ	REVISED -	
		PLOT DATE = 6/14/2022	CHECKED - ALN	REVISED -	

DIAPHRAGM DETAILS
STRUCTURE NO. 072-0231
SHEET 9 OF 27 SHEETS

F.A.S. RTE.	SECTION	COUNTY	TOTAL SHEETS	SHEET NO.
1388	(Z-2C-15D) BR-1	PEORIA	90	27
		CONTRACT NO. 68862		
		ILLINOIS	FED. AID PROJECT	

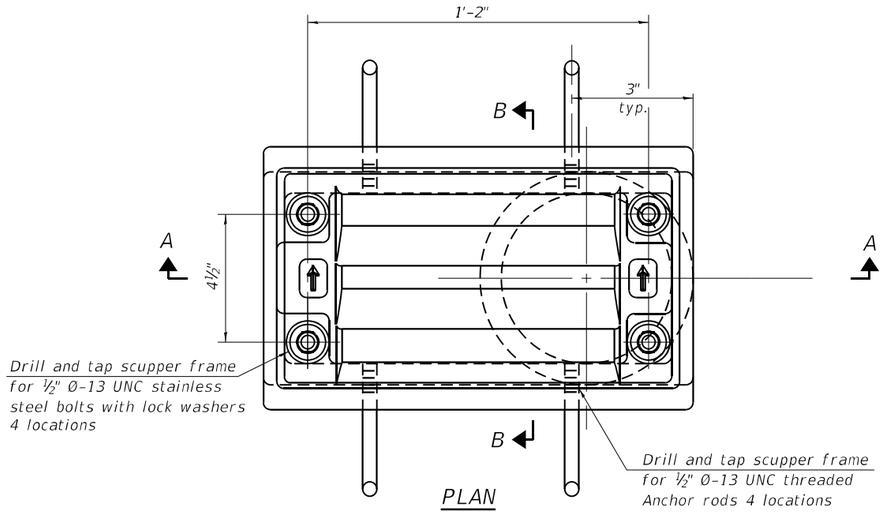

PLAN

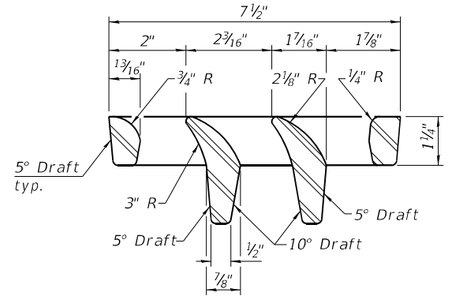

VANE GRATE DETAIL

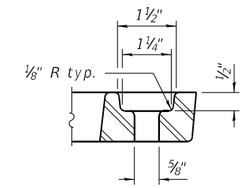

GRATE BOLT HOLE DETAIL

Notes:

All cast iron parts shall be gray iron conforming to the requirements of AASHTO M105, Class 35B and AASHTO M306.

Bolts, anchor rods, nuts and washers shall be according to ASTM A307 and shall be galvanized according to AASHTO M232. As an alternate stainless steel may be used.

Stainless steel hardware shall be according to Article 1006.29(d) of the Standard Specifications.

Structural steel weldments of equal sections and of the same configuration may be substituted for the cast iron scupper frames and downspouts; however, the scupper grates shall remain cast iron. Fillet or full penetration welds shall be used for the weldments. Details shall be submitted to the Engineer for approval.

Structural steel scupper frames and downspouts, when utilized, shall be galvanized according to AASHTO M111.

As an alternate, fiberglass may be used for downspouts according to ASTM D2996 with a short-time rupture strength hoop tensile stress of 30,000 psi min. in lieu of the cast iron or structural steel.

Exterior surfaces of downspouts and exterior exposed surfaces of the scupper frame below deck shall be treated as specified on sheet 2 of 27 for exterior sides of fascia beams.

The Contractor shall take appropriate measures to assure that Protective Coat is not applied to the scupper.

Cost of the grate, frame, downspout, anchor rods, nuts and washers including complete installation of the scupper shall be paid for at the contract unit price for Drainage Scupper, DS-11.

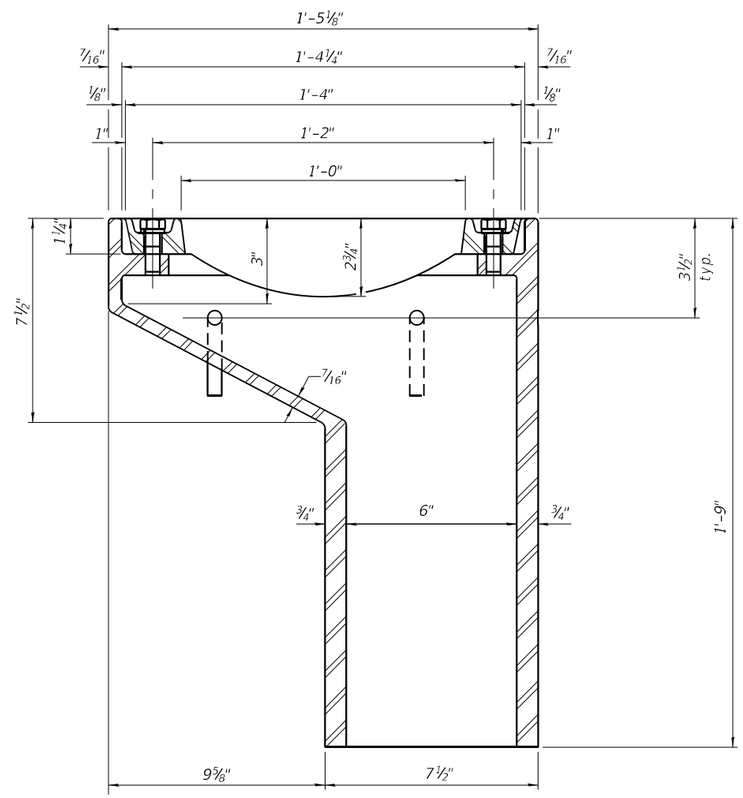

SECTION A-A

See sheet 7 of 27 for scupper location relative to parapet.

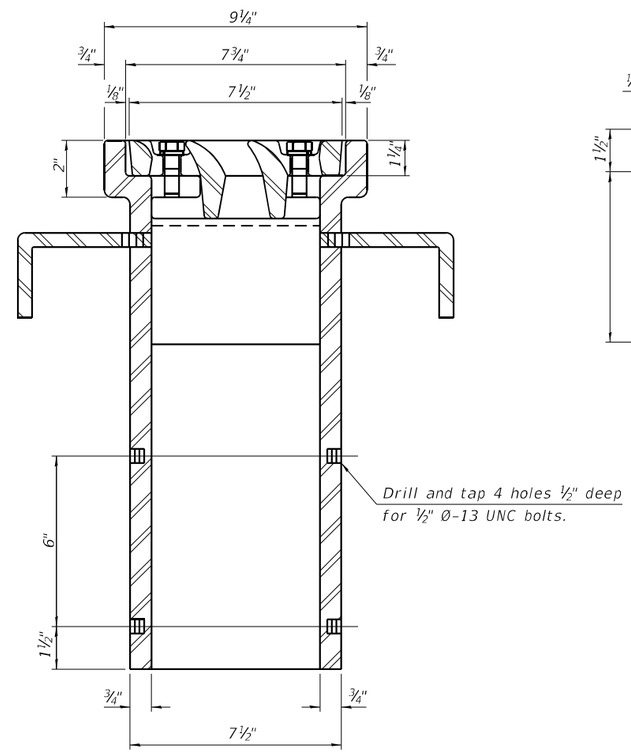

SECTION B-B

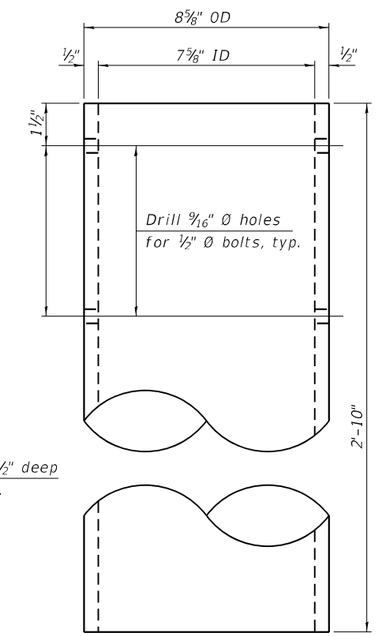

DOWNSPOUT

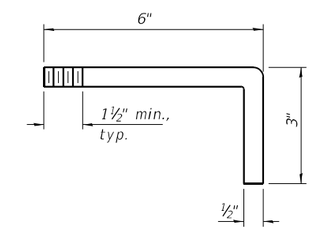

ANCHOR ROD DETAIL

BILL OF MATERIAL

ITEM	UNIT	QUANTITY
Drainage Scupper, DS-11	Each	2

MODEL: Default
FILE NAME: P:\2019\190388\WO9 - IL 8 Kickapoo CK Update (STRUCTURE)\4 CADD - DWG\4.4 Struc\0720231-68862-10-Drainage Scupper Details.dgn

TWM ENGINEERING GEOSPATIAL SERVICES
TWM, INC. WWW.TWM-INC.COM
IL DESIGN FIRM LICENSE NO: 184-001220

USER NAME = jesker	DESIGNED - CAJ	REVISED -	
	CHECKED - ALN	REVISED -	
PLOT SCALE = 0.1667 ' / in.	DRAWN - CAJ	REVISED -	
PLOT DATE = 6/14/2022	CHECKED - ALN	REVISED -	

STATE OF ILLINOIS
DEPARTMENT OF TRANSPORTATION

DRAINAGE SCUPPER, DS-11
STRUCTURE NO. 072-0231

SHEET 10 OF 27 SHEETS

F.A.S. RTE.	SECTION	COUNTY	TOTAL SHEETS	SHEET NO.
1388	(Z-2C-15D) BR-1	PEORIA	90	28
		CONTRACT NO. 68862		
		ILLINOIS	FED. AID PROJECT	

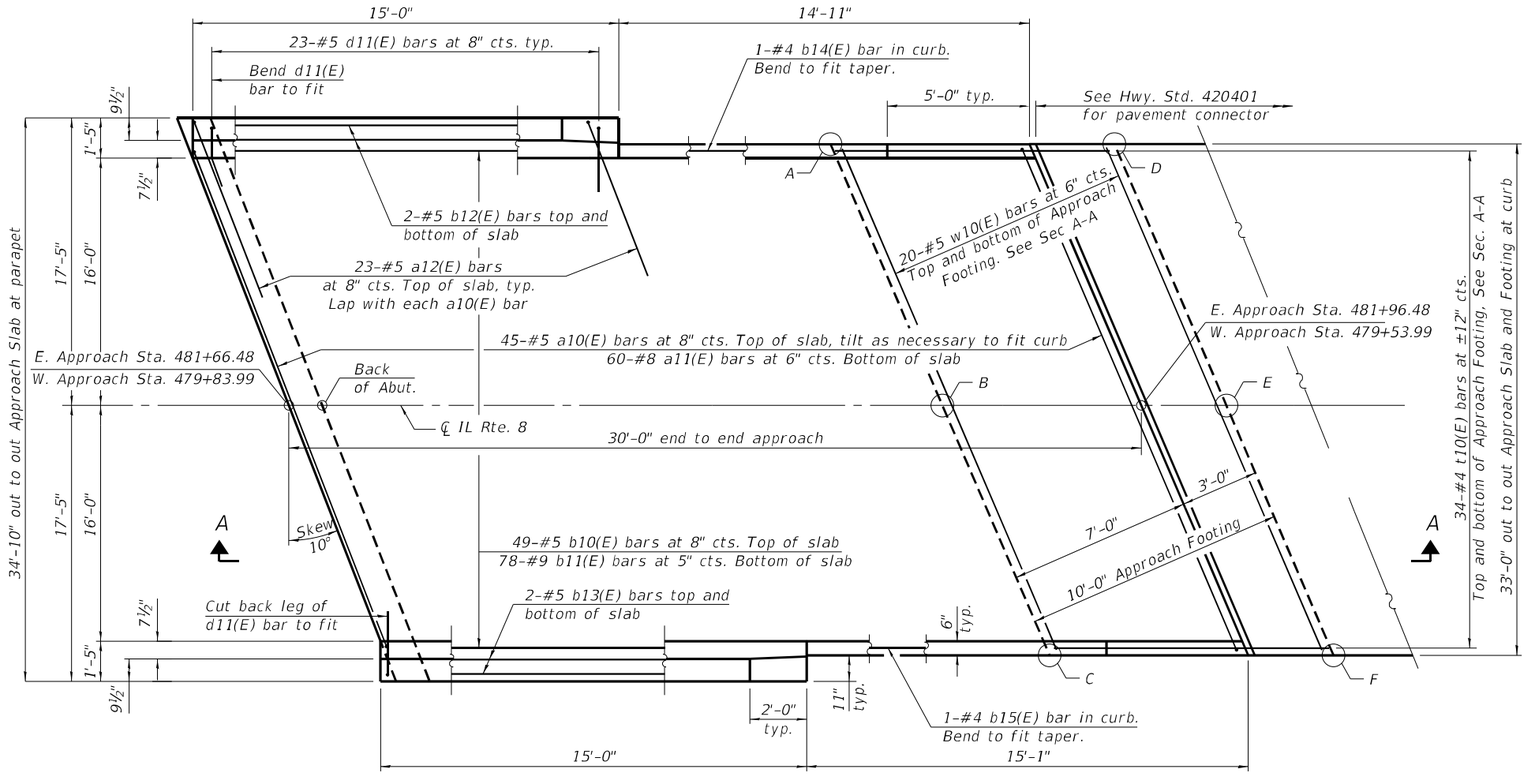

PLAN

(East approach slab shown; West approach slab similar by 180° rotation)

TOP AND BOTTOM ELEVATIONS FOR APPROACH FOOTING

West Approach			East Approach		
Point/ Location	Top	Bottom	Point/ Location	Top	Bottom
A	558.96	558.13	A	559.29	558.46
B	559.24	558.40	B	559.58	558.75
C	558.95	558.12	C	559.30	558.47
D	558.94	558.11	D	559.31	558.48
E	559.22	558.39	E	559.59	558.76
F	558.94	558.11	F	559.32	558.49

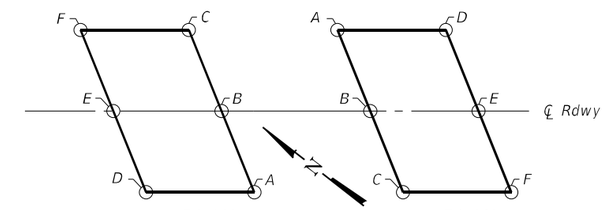

PLAN
W. Appr. Footing

PLAN
E. Appr. Footing

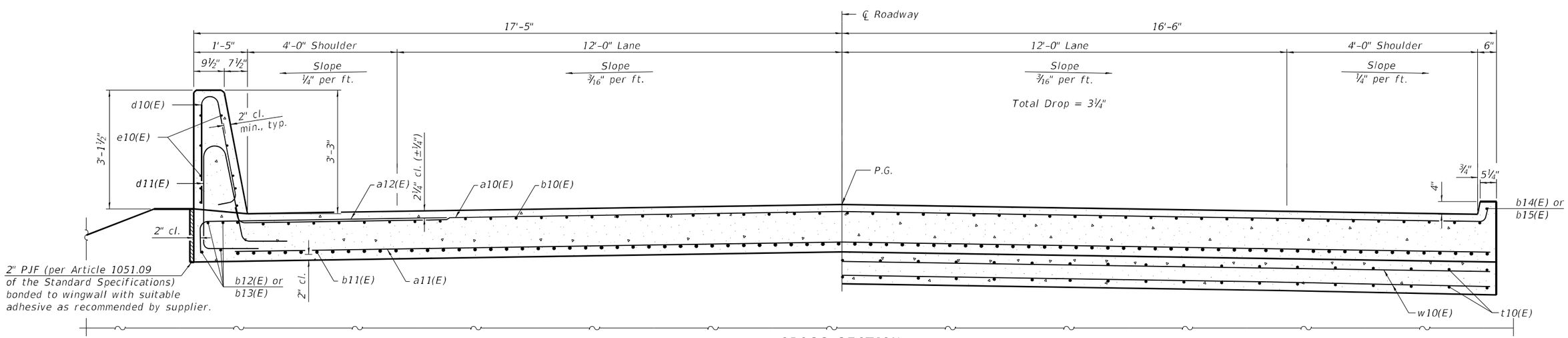

NEAR ABUTMENT

CROSS SECTION

(Looking East)

AT APPROACH FOOTING

BAIA-CIP-39CS-R(≤30°) 10-12-2021

(Sheet 1 of 2)

MODEL: Default
FILE NAME: P:\2019\190388\WO9 - IL 8 Kickapoo CK Update (STRUCTURE)\4 CADD - DWG\4.4 Struc\0720231-68862-1-Approach Slab Details (1 of 2).dgn

TWM ENGINEERING & GEOSPATIAL SERVICES	TWM, INC. WWW.TWM-INC.COM IL DESIGN FIRM LICENSE NO: 184-001220	USER NAME = jesker	DESIGNED - CAJ	REVISED -	STATE OF ILLINOIS DEPARTMENT OF TRANSPORTATION
			CHECKED - ALN	REVISED -	
		PLOT SCALE = 0.1667 ' / in.	DRAWN - CAJ	REVISED -	
		PLOT DATE = 6/14/2022	CHECKED - ALN	REVISED -	

BRIDGE APPROACH SLAB DETAILS
STRUCTURE NO. 072-0231

SHEET 11 OF 27 SHEETS

F.A.S. RTE.	SECTION	COUNTY	TOTAL SHEETS	SHEET NO.
1388	(Z-2C-15D) BR-1	PEORIA	90	29
		CONTRACT NO. 68862		
		ILLINOIS	FED. AID PROJECT	

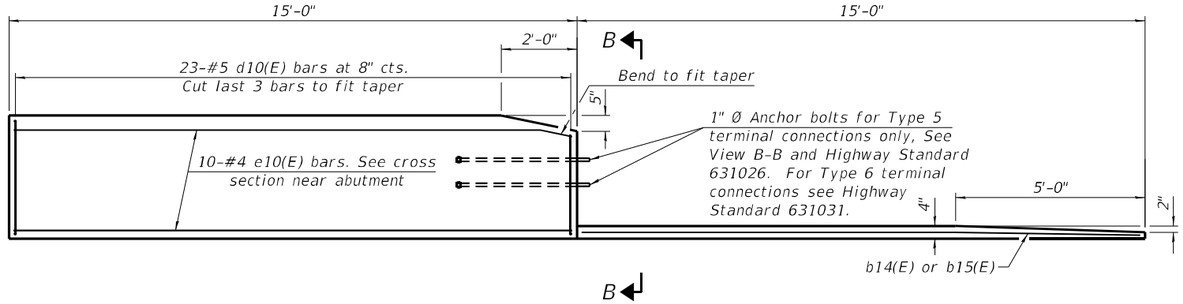

INSIDE ELEVATION OF PARAPET AND CURB

Notes:

The joint opening shall be adjusted for temperature per Article 520.04 of the Standard Specifications. However, since this detail is for jointless structures, the length of bridge used to calculate the adjustment shall be equal to half the total bridge length plus the length of the bridge approach slab.

Parapet concrete shall be paid for as Concrete Superstructure.

Approach slab shall be paid for as Concrete Superstructure (Approach Slab).

Approach footing concrete shall be paid for as Concrete Structures.

The approach footing maximum applied service bearing pressure (Qmax) = 2.0 ksf.

Cost of excavation for approach footing included with Concrete Structures.

For Granular Backfill for Structures and drainage treatment details, see sheet 2 of 27.

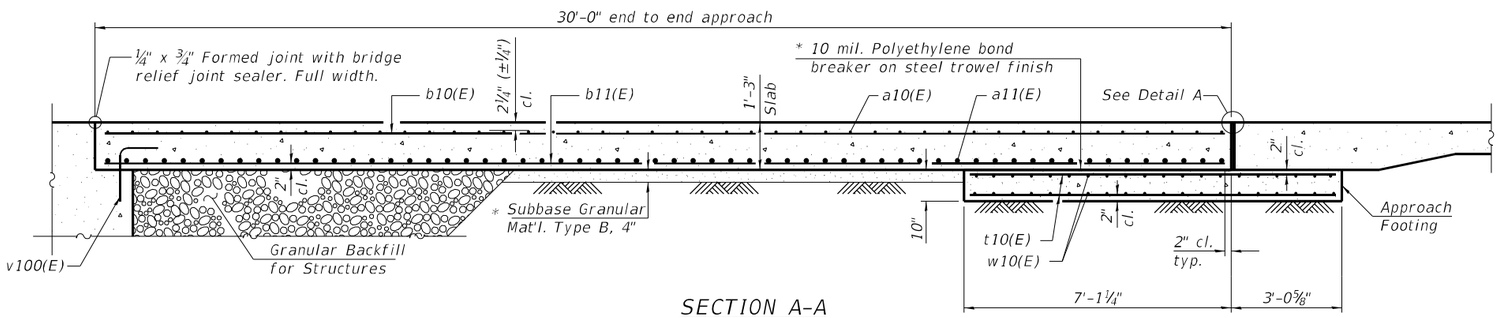

SECTION A-A

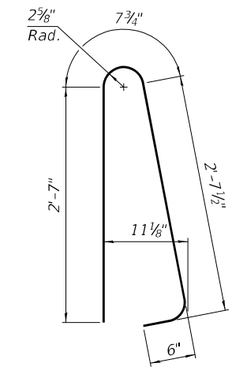

BAR d10(E)

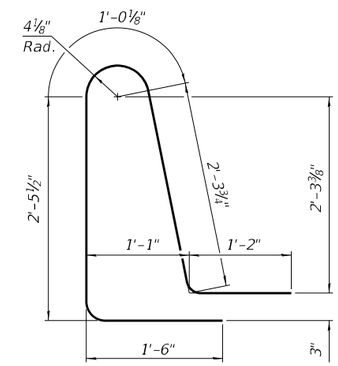

BAR d11(E)

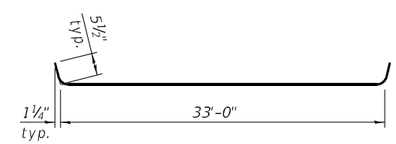

BAR a10(E)

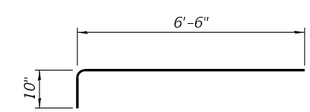

BAR a12(E)

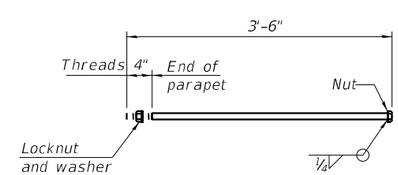

*1" Ø ANCHOR BOLT

(Anchor bolt assemblies shall be galvanized according to Article 1006.09 of the Standard Specifications)

TWO APPROACHES
BILL OF MATERIAL

Bar	No.	Size	Length	Shape
a10(E)	90	#5	33'-11"	
a11(E)	120	#8	33'-2"	
a12(E)	92	#5	7'-4"	
b10(E)	98	#5	29'-8"	
b11(E)	156	#9	29'-8"	
b12(E)	8	#5	14'-8"	
b13(E)	8	#5	14'-7"	
b14(E)	2	#4	14'-7"	
b15(E)	2	#4	14'-8"	
d10(E)	92	#5	6'-5"	
d11(E)	92	#5	8'-6"	
e10(E)	40	#4	14'-8"	
t10(E)	136	#4	9'-9"	
w10(E)	80	#5	33'-2"	
Concrete Superstructure			Cu. Yd.	7.8
Concrete Superstructure (Approach Slab)			Cu. Yd.	97.7
Concrete Structures			Cu. Yd.	20.8
Reinforcement Bars, Epoxy Coated			Pound	39,040

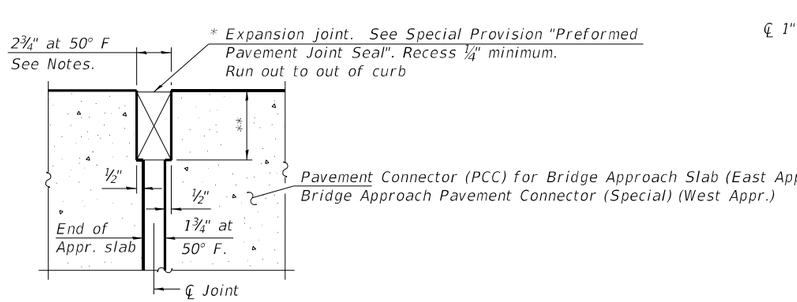

DETAIL A

(at Rt. ∠'s)

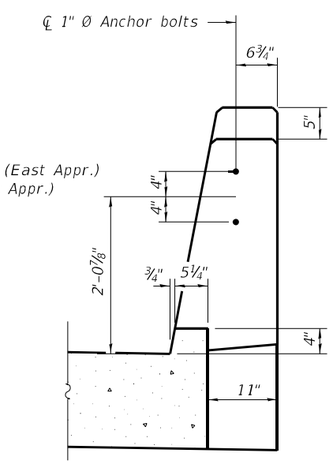

VIEW B-B

* Cost included with Concrete Superstructure (Approach Slab).

** Per manufacturer recommendations

BAIA-CIP-39CS-R(≤30°) 10-12-2021

(Sheet 2 of 2)

MODEL: Default
FILE NAME: P:\2019\190388\W09 - IL 8 Kickapoo CK Update (STRUCTURE)\4 CADD - DWG\4.4 Struc\0720231-68862-12-Approach Slab Details (2 of 2).dgn

TWM ENGINEERING & GEOSPATIAL SERVICES	TWM, INC. WWW.TWM-INC.COM IL DESIGN FIRM LICENSE NO. 184-001220	USER NAME = mjoost	DESIGNED - CAJ	REVISED -	STATE OF ILLINOIS DEPARTMENT OF TRANSPORTATION
			CHECKED - ALN	REVISED -	
		PLOT SCALE = 0.1667 ' / in.	DRAWN - CAJ	REVISED -	
		PLOT DATE = 5/1/2023	CHECKED - ALN	REVISED -	

BRIDGE APPROACH SLAB DETAILS
STRUCTURE NO. 072-0231

SHEET 12 OF 27 SHEETS

F.A.S. RTE.	SECTION	COUNTY	TOTAL SHEETS	SHEET NO.
1388	(Z-2C-15D) BR-1	PEORIA	90	30
		CONTRACT NO. 68862		
	ILLINOIS	FED. AID PROJECT		

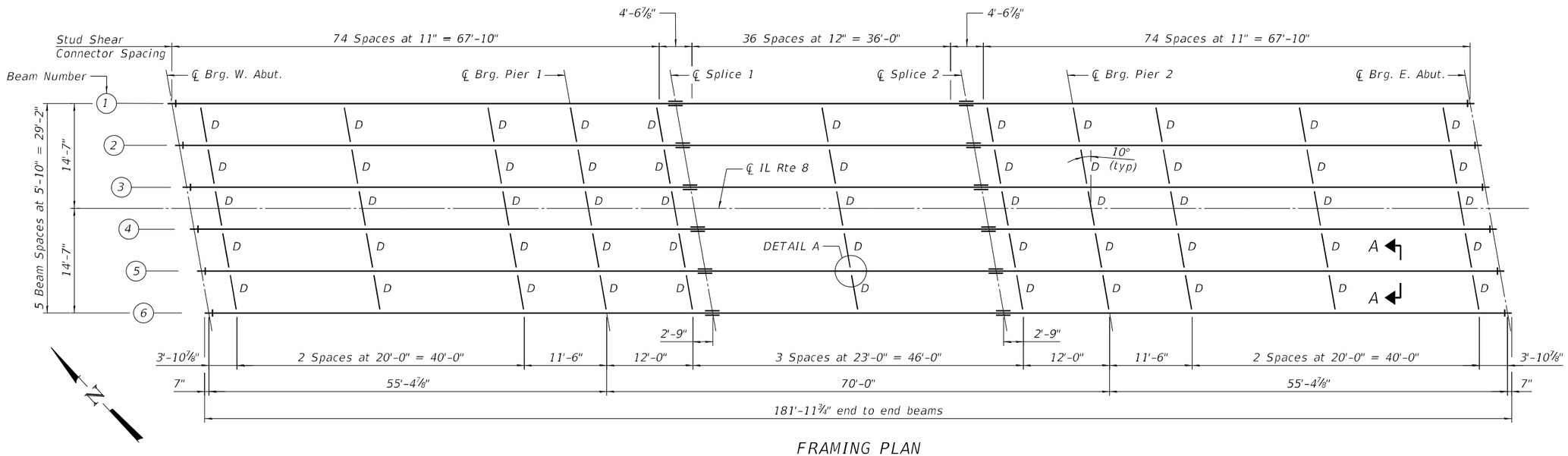

FRAMING PLAN

All beams are W30x90, AASHTO M270, Grade 50, CVN
"CVN" denotes Charpy-V-notch Impact Energy requirements, Zone 2.

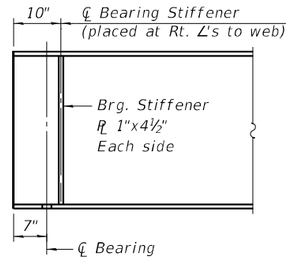

TYPICAL END OF BEAM ELEVATION

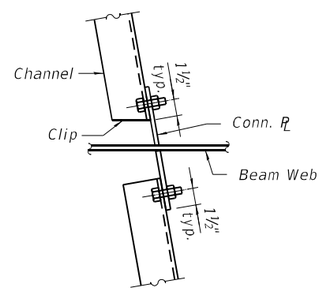

DETAIL A

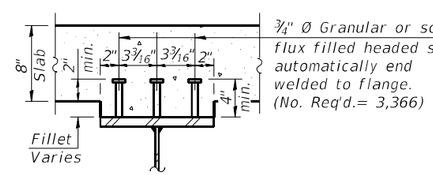

SECTION A-A

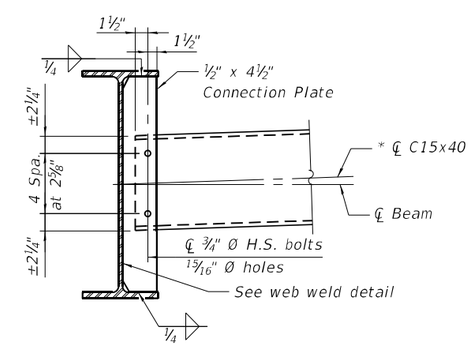

INTERIOR DIAPHRAGM D

(55 required)
See Weld Limits and Clip Detail for information not shown

***TOP OF BEAM ELEVATIONS

BEAM	℄ Brg. W. Abut.	℄ Brg. Pier 1	℄ Splice 1	℄ Splice 2	℄ Brg. Pier 2	℄ Brg. E. Abut.
1	559.56	559.58	559.58	559.64	559.68	559.83
2	559.67	559.68	559.69	559.75	559.79	559.94
3	559.76	559.78	559.78	559.84	559.88	560.03
4	559.76	559.78	559.79	559.84	559.88	560.03
5	559.67	559.69	559.69	559.75	559.79	559.94
6	559.57	559.59	559.60	559.65	559.69	559.84

*** For Fabrication Only

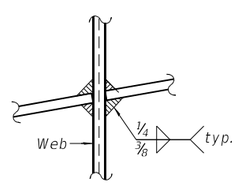

WEB WELD DETAIL

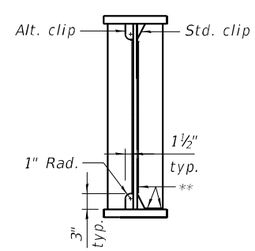

WELD LIMITS AND CLIP DETAIL

** Stop welds ¼" (±⅛") from edges as shown, typical.

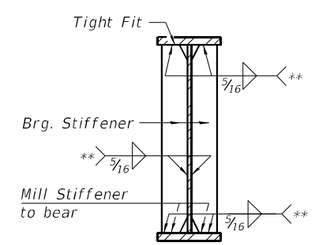

BEARING STIFFENER AT ABUTMENT

See Weld Limits and Clip Details for information not shown

Note:
Two hardened washers required for each set of oversized holes.
*Alternate channels of equal depth and larger weight are permitted to facilitate material acquisition. Alternate channels, if utilized, shall be provided at no additional cost to the Department.
All diaphragms shall be installed as steel is erected and secured with erection pins and bolts except as otherwise noted. Individual diaphragms at supports may be temporarily disconnected to install bearing anchor rods.

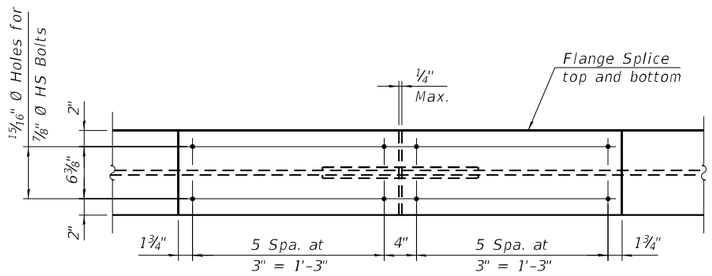

PLAN

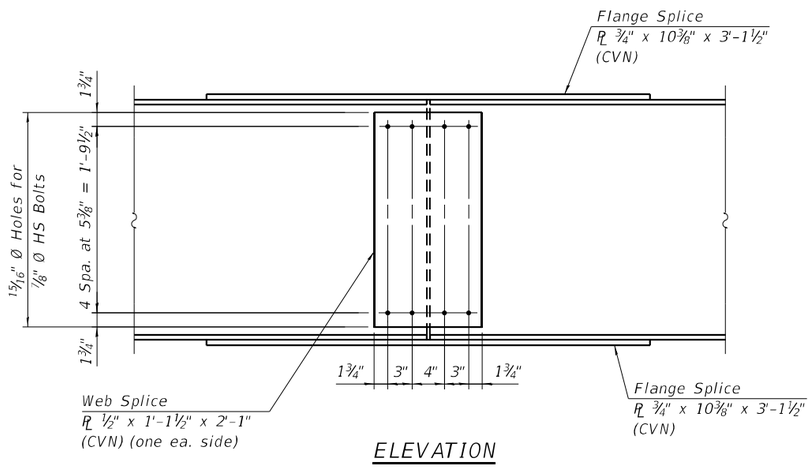

ELEVATION

SPLICE DETAILS

(12 Required)

Note:
All splice plates shall be AASHTO M270, Grade 50.
"CVN" denotes Charpy-V-notch Impact energy requirements, Zone 2.

INTERIOR GIRDER MOMENT TABLE						
		0.4 Sp. 1	Pier 1	0.5 Sp. 2	Pier 2	0.6 Sp. 3
I_s	(in^4)	3610	3610	3610	3610	3610
$I_c(n)$	(in^4)	11286	11286	11286	11286	11286
$I_c(3n)$	(in^4)	8561	8561	8561	8561	8561
$I_c(cr)$	(in^4)	–	5370	–	5370	–
S_s	(in^3)	245	245	245	245	245
$S_c(n)$	(in^3)	388	388	388	388	388
$S_c(3n)$	(in^3)	353	353	353	353	353
$S_c(cr)$	(in^3)	–	294	–	294	–
DC1	(k/ft)	0.698	0.698	0.698	0.698	0.698
M_{DC1}	(ft-k)	147	277	151	277	147
DC2	(k/ft)	0.175	0.175	0.175	0.175	0.175
M_{DC2}	(ft-k)	36	70	37	70	36
DW	(k/ft)	0.267	0.267	0.267	0.267	0.267
M_{DW}	(ft-k)	56	107	57	107	56
LLDF		0.495	0.479	0.466	0.479	0.495
M_{LL+IM}	(ft-k)	485	458	479	458	485
M_U (Strength I)	(ft-k)	1162	1396	1159	1396	1162
$\varphi_f M_n$	(ft-k)	1945	1453	1941	1453	1945
f_s DC1	(ksi)	7.20	13.57	7.40	13.57	7.20
f_s DC2	(ksi)	1.22	2.86	1.26	2.86	1.22
f_s DW	(ksi)	1.90	4.37	1.94	4.37	1.90
f_s (LL+IM)	(ksi)	15.01	18.69	14.82	18.69	15.01
f_s (Service II)	(ksi)	29.84	45.08	29.86	45.08	29.84
$0.95R_hF_{yf}$	(ksi)	47.50	47.50	47.50	47.50	47.50
f_s (Total)(Strength I)	(ksi)	–	–	–	–	–
$\varphi_f F_n$	(ksi)	–	–	–	–	–
V_f	(k)	–	23.7	–	25.5	–

GIRDER REACTION TABLE									
		W. Abut.		Pier 1		Pier 2		E. Abut.	
		Interior	Exterior	Interior	Exterior	Interior	Exterior	Interior	Exterior
LLDF		0.658	0.488	0.658	0.488	0.658	0.488	0.658	0.488
OCF		–	1.051	–	–	–	–	–	1.051
R_{DC1}	(k)	15.0	16.8	48.8	54.5	48.8	54.5	15.0	16.8
R_{DC2}	(k)	3.6	3.6	12.2	12.2	12.2	12.2	3.6	3.6
R_{DW}	(k)	5.5	5.5	18.7	18.7	18.7	18.7	5.5	5.5
R_{LL}	(k)	48.4	37.7	76.8	56.9	76.8	56.9	48.4	37.7
R_{Im}	(k)	12.4	9.7	15.0	11.1	15.0	11.1	12.4	9.7
RTotal	(k)	84.9	73.3	171.5	153.4	171.5	153.4	84.9	73.3

Is, Ss: Non-composite moment of inertia and section modulus of the steel section used for computing fs (Total-Strength I, and Service II) due to non-composite dead loads ($in.^4$ and $in.^3$).

Ic(n), Sc(n): Composite moment of inertia and section modulus of the steel and deck based upon the modular ratio, "n", used for computing fs (Total-Strength I, and Service II) in uncracked sections due to short-term composite live loads ($in.^4$ and $in.^3$).

Ic(3n), Sc(3n): Composite moment of inertia and section modulus of the steel and deck based upon 3 times the modular ratio, "3n", used for computing fs (Total-Strength I, and Service II) in uncracked sections, due to long-term composite (superimposed) dead loads ($in.^4$ and $in.^3$).

Ic(cr), Sc(cr): Composite moment of inertia and section modulus of the steel and longitudinal deck reinforcement, used for computing fs (Total-Strength I and Service II) in cracked sections, due to both short-term composite live loads and long-term composite (superimposed) dead loads ($in.^4$ and $in.^3$).

DC1: Un-factored non-composite dead load (kips/ft.).

MDC1: Un-factored moment due to non-composite dead load (kip-ft.).

DC2: Un-factored long-term composite (superimposed excluding future wearing surface) dead load (kips/ft.).

MDC2: Un-factored moment due to long-term composite (superimposed excluding future wearing surface) dead load (kip-ft.).

DW: Un-factored long-term composite (superimposed future wearing surface only) dead load (kips/ft.).

MDW: Un-factored moment due to long-term composite (superimposed future wearing surface only) dead load (kip-ft.).

M_{LL+IM}: Un-factored live load moment plus dynamic load allowance (impact) (kip-ft.).

Mu (Strength I): Factored design moment (kip-ft.).
1.25 (MDC1 + MDC2) + 1.5 MDW + 1.75 M_{LL+IM}

Øf Mn: Compact composite positive moment capacity computed according to Article 6.10.7.1 or non-slender negative moment capacity according to Article A6.1.1 or A6.1.2 (kip-ft).

fs DC1: Un-factored stress at edge of flange for controlling steel flange due to vertical non-composite dead loads as calculated below (ksi).
MDC1/ Snc

fs DC2: Un-factored stress at edge of flange for controlling steel flange due to vertical composite dead loads as calculated below (ksi).
MDC2/ Sc(3n) or MDC2/ Sc(cr) as applicable.

fs DW: Un-factored stress at edge of flange for controlling steel flange due to vertical composite future wearing surface loads as calculated below (ksi).
MDW/ Sc(3n) or MDW/ Sc(cr) as applicable.

$fs_{(LL+IM)}$: Un-factored stress at edge of flange for controlling steel flange due to vertical composite live load plus impact loads as calculated below (ksi).
M_{LL+IM} / Sc(n) or M_{LL+IM} / Sc(cr) as applicable.

fs (Service II): Sum of stresses as computed below (ksi).
fsDC1 + fsDC2 + fsDW + 1.3 $fs_{(LL+IM)}$

0.95RhFyf: Composite stress capacity for Service II loading according to Article 6.10.4.2 (ksi).

fs (Total)(Strength I): Sum of stresses as computed below on non-compact section (ksi).
1.25 (fsDC1 + fsDC2) + 1.5 fsDW + 1.75 $fs_{(LL+IM)}$

Øf Fn: Non-Compact composite positive or negative stress capacity for Strength I loading according to Article 6.10.7 or 6.10.8 (ksi).

Vf: Maximum factored shear range in span computed according to Article 6.10.10.

LLDF: Live Load Distribution Factor for moment and shear computed according to Article 4.6.2.2 and further IDOT provisions.

OCF: Obtuse Correction Factor applied to non-continuous exterior beam ends and computed according to Article 4.6.2.2.3c-1 or as further simplified by IDOT.

Note:
MLL and RLL include the effects of centrifugal force and superelevation.

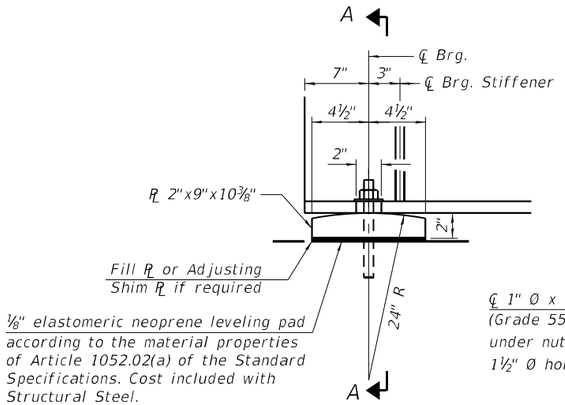

ELEVATION AT ABUTMENT

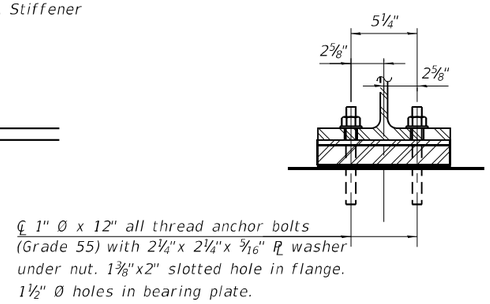

SECTION A-A

FIXED BEARING
(12 Required)

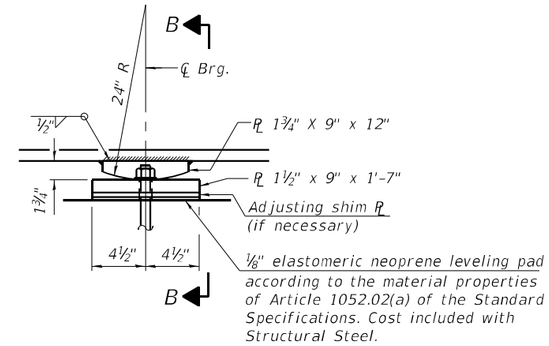

ELEVATION AT PIER

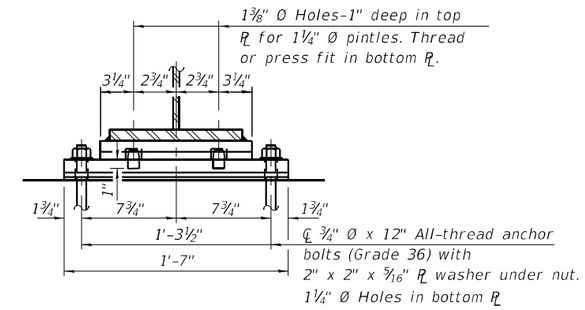

SECTION B-B

FIXED BEARING

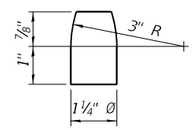

PINTLE

Notes:

All bearing plates and pintles shall be AASHTO M270 Grade 50.

Two ⅛" adjusting shims shall be provided for each bearing in addition to all other plates or shims and placed as shown on bearing details.

Anchor bolts at all supports shall be installed as each member is erected unless an equivalent temporary means of lateral restraint is used.

All bearing plates, shim plates, anchor bolts, nuts, washers and pintles shall be hot dip galvanized according to AASHTO M111 or M232 as applicable.

BILL OF MATERIAL

Item	Unit	Total
Anchor Bolts, 1"	Each	24
Anchor Bolts, ¾"	Each	24

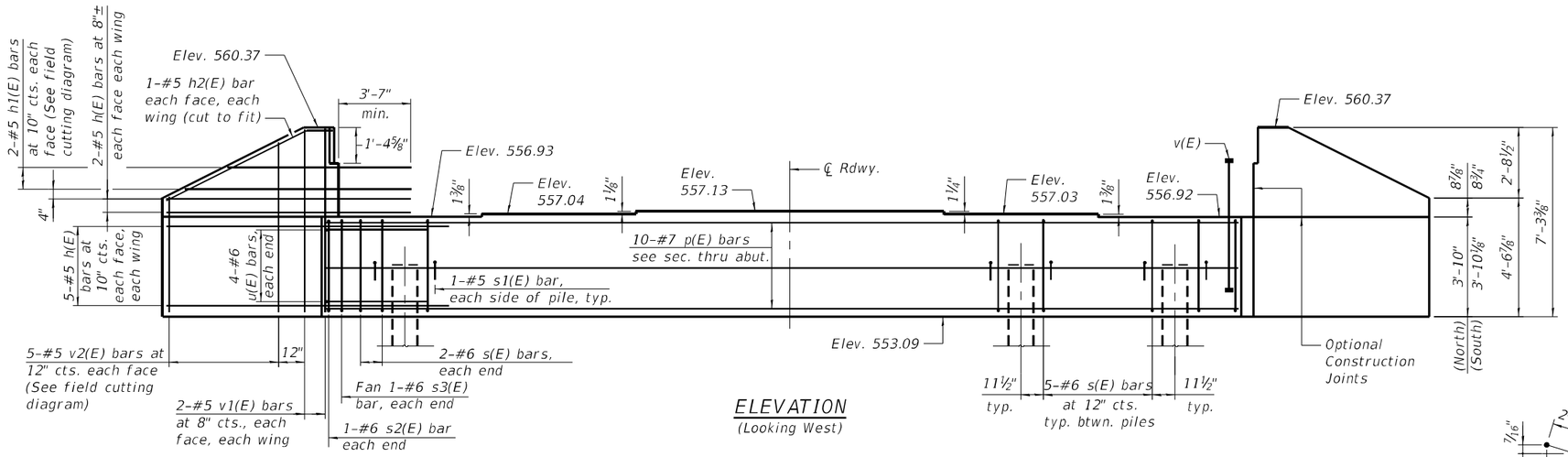

ELEVATION
(Looking West)

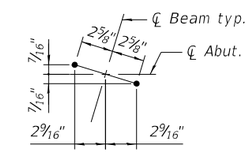

DETAIL A

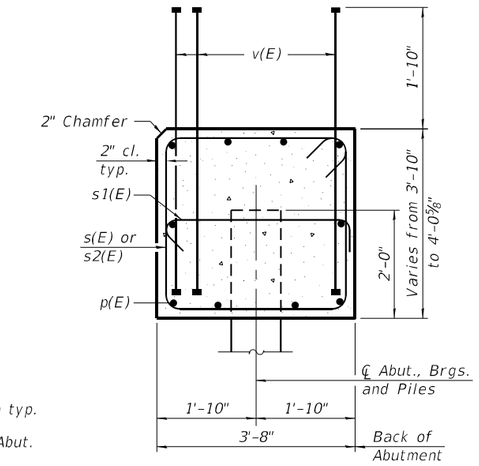

SEC. THRU ABUT.
Dimensions at right angles to abutment.

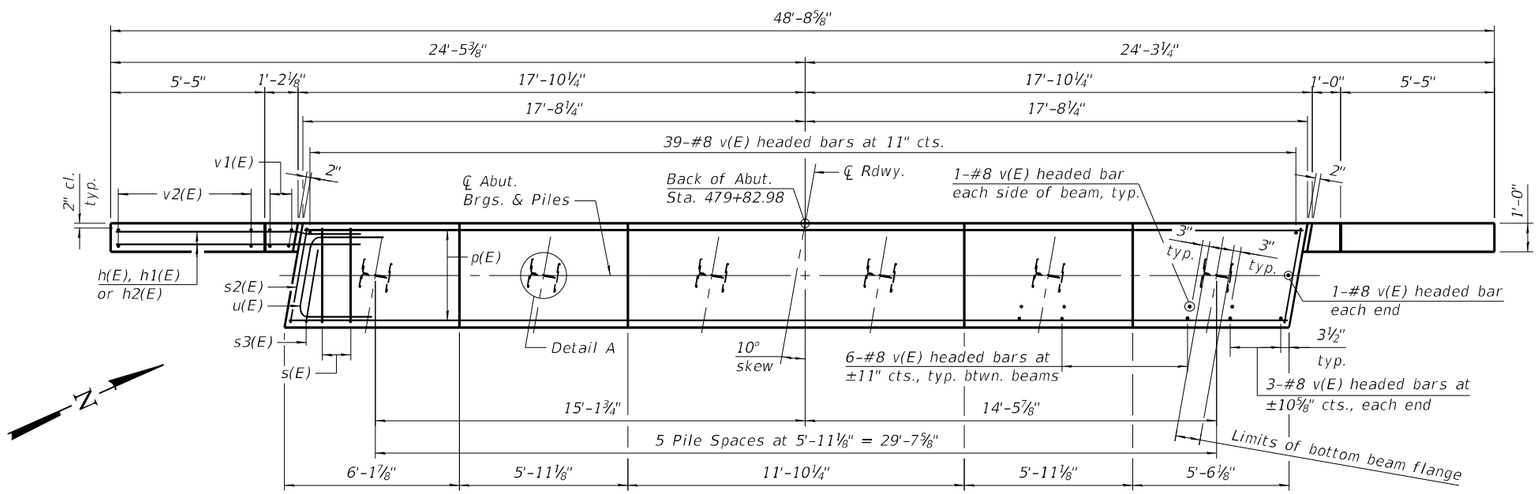

PLAN

BILL OF MATERIAL

Bar	No.	Size	Length	Shape
h(E)	28	#5	10'-0"	
h1(E)	4	#5	17'-4"	
h2(E)	4	#5	6'-9"	
p(E)	10	#7	35'-0"	
s(E)	29	#6	15'-0"	
s1(E)	12	#5	4'-4"	
s2(E)	2	#6	15'-1"	
s3(E)	2	#6	8'-6"	
u(E)	8	#6	11'-11"	
v(E)	89	#8	5'-4"	
v1(E)	8	#5	7'-0"	
v2(E)	10	#5	10'-9"	
Structure Excavation			Cu. Yd.	87
Concrete Structures			Cu. Yd.	22.0
Reinforcement Bars, Epoxy Coated			Pound	3,470
Furnishing Steel Piles, HP12x53			Foot	360
Driving Piles			Foot	360
Test Pile, HP12x53			Each	1

Notes:
Pour steps monolithically with cap.
Headed bars shall conform to ASTM A970 with threaded attachment; Class HA; and reinforcement bars conforming to ASTM A706. Cost included with Reinforcement Bars, Epoxy Coated.
For details of piles see sheet 20 of 27.

PILE DATA

Type: HP12x53
Nominal Required Bearing: 418 kips
Factored Resistance Available: 230 kips
Est. Length: 72 ft.
No. Production Piles: 5
No. Test Piles: 1

Note: Pile shall be driven through 18" diameter precored holes extending to elevation 535.10 according to Article 512.09(c) of the Standard Specifications. Costs to be included in Driving Piles.

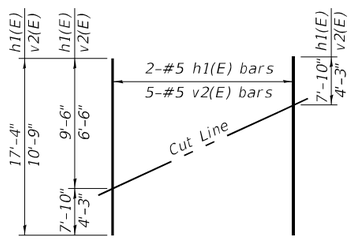

FIELD CUTTING DIAGRAM
Order h1(E) and v2(E) full length. Cut as shown and use remainder of bars in opposite wing.

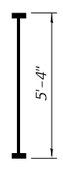

BAR v(E)
(Headed)

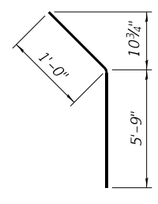

BAR h2(E)

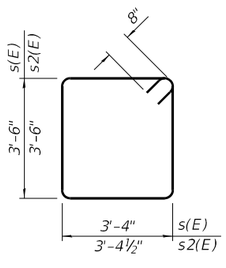

BAR s(E) & s2(E)

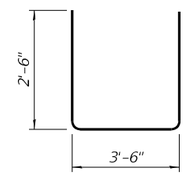

BAR s3(E)

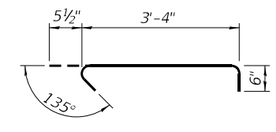

BAR s1(E)

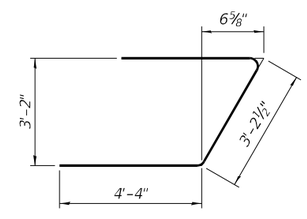

BAR u(E)

MODEL: Default
FILE NAME: P:\2019\190388\WO9 - IL 8 Kickapoo CK Update (STRUCTURE)\4 CADD - DWG\4.4 Struc\0720231-68862-16-West Abutment.dgn

TWM ENGINEERING GEOSPATIAL SERVICES	TWM, INC. WWW.TWM-INC.COM	USER NAME = jesker	DESIGNED - NP	REVISED -	STATE OF ILLINOIS DEPARTMENT OF TRANSPORTATION
	IL DESIGN FIRM LICENSE NO: 184-001220	PLOT SCALE = 0:2.0000 ':" / in.	CHECKED - ALN	REVISED -	
		PLOT DATE = 6/14/2022	DRAWN - NP	REVISED -	
			CHECKED - ALN	REVISED -	

WEST ABUTMENT
STRUCTURE NO. 072-0231
SHEET 16 OF 27 SHEETS

F.A.S. RTE.	SECTION	COUNTY	TOTAL SHEETS	SHEET NO.
1388	(Z-2C-15D) BR-1	PEORIA	90	34
		CONTRACT NO. 68862		
		ILLINOIS	FED. AID PROJECT	

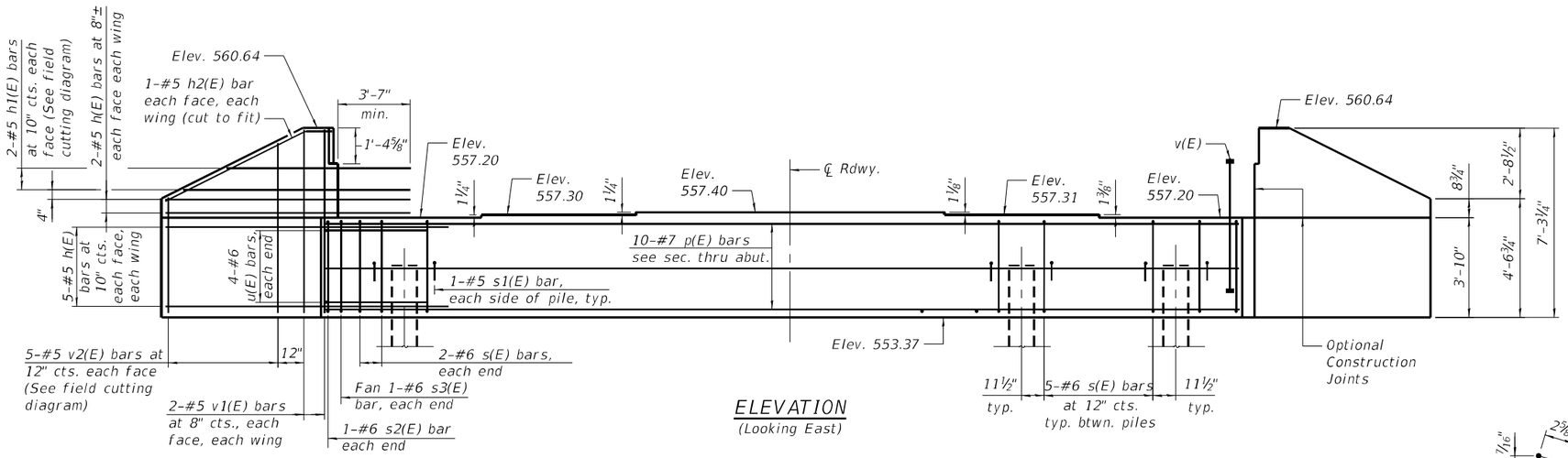

ELEVATION
(Looking East)

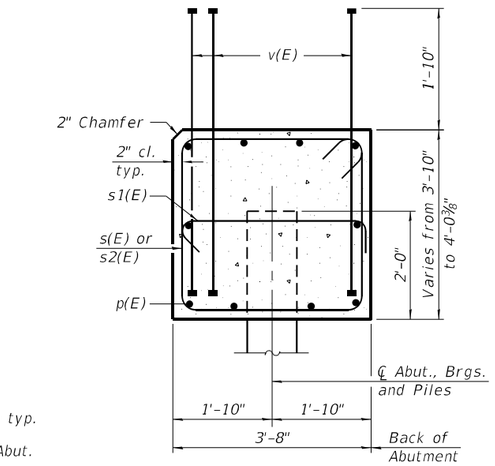

SEC. THRU ABUT.
Dimensions at right angles to abutment.

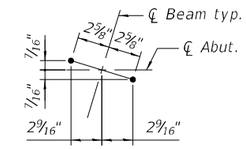

DETAIL A

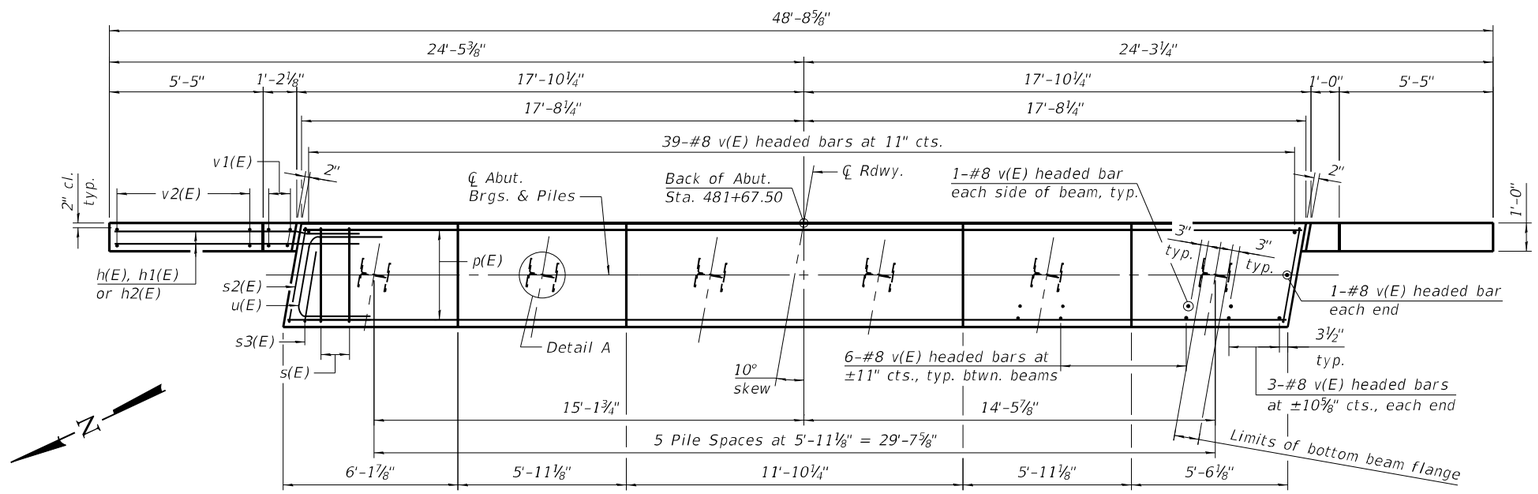

PLAN

BILL OF MATERIAL

Bar	No.	Size	Length	Shape
h(E)	28	#5	10'-0"	
h1(E)	4	#5	17'-4"	
h2(E)	4	#5	6'-9"	
p(E)	10	#7	35'-0"	
s(E)	29	#6	15'-0"	
s1(E)	12	#5	4'-4"	
s2(E)	2	#6	15'-1"	
s3(E)	2	#6	8'-6"	
u(E)	8	#6	11'-11"	
v(E)	89	#8	5'-4"	
v1(E)	8	#5	7'-0"	
v2(E)	10	#5	10'-9"	
Structure Excavation			Cu. Yd.	87
Concrete Structures			Cu. Yd.	22.0
Reinforcement Bars, Epoxy Coated			Pound	3,470
Furnishing Steel Piles, HP12x53			Foot	270
Driving Piles			Foot	270
Test Pile, HP12x53			Each	1

Notes:
Pour steps monolithically with cap.
Headed bars shall conform to ASTM A970 with threaded attachment; Class HA; and reinforcement bars conforming to ASTM A706. Cost included with Reinforcement Bars, Epoxy Coated.
For details of piles see sheet 20 of 27.

PILE DATA

Type: HP12x53
Nominal Required Bearing: 344 kips
Factored Resistance Available: 189 kips
Est. Length: 54 ft.
No. Production Piles: 5
No. Test Piles: 1

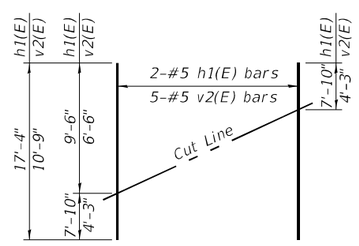

FIELD CUTTING DIAGRAM
Order h1(E) and v2(E) full length. Cut as shown and use remainder of bars in opposite wing.

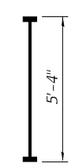

BAR v(E)
(Headed)

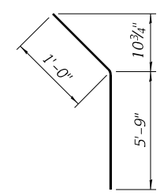

BAR h2(E)

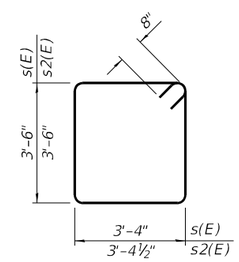

BAR s(E) & s2(E)

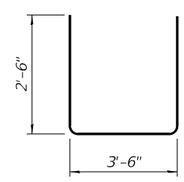

BAR s3(E)

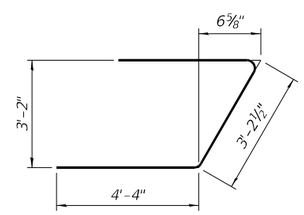

BAR u(E)

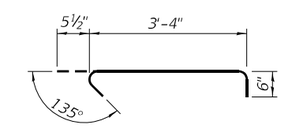

BAR s1(E)

MODEL: Default
FILE NAME: P:\2019\190388\W09 - IL 8 Kickapoo CK Update (STRUCTURE)\4 CADD - DWGs\4.4 Struct\0720231-68862-17-East Abutment.dgn

TWM ENGINEERING GEOSPATIAL SERVICES
TWM, INC.
WWW.TWM-INC.COM
IL DESIGN FIRM LICENSE NO: 184-001220

USER NAME = jesker	DESIGNED - NP	REVISED -	
	CHECKED - ALN	REVISED -	
PLOT SCALE = 0:2.0000 ':" / in.	DRAWN - NP	REVISED -	
PLOT DATE = 6/14/2022	CHECKED - ALN	REVISED -	

STATE OF ILLINOIS
DEPARTMENT OF TRANSPORTATION

EAST ABUTMENT
STRUCTURE NO. 072-0231

SHEET 17 OF 27 SHEETS

F.A.S. RTE.	SECTION	COUNTY	TOTAL SHEETS	SHEET NO.
1388	(Z-2C-15D) BR-1	PEORIA	90	35

CONTRACT NO. 68862
ILLINOIS FED. AID PROJECT

* If the prevailing water surface elevation during construction is consistently different than estimated on the plans, the contractor may propose an adjustment to the top of the drilled shaft elevation as part of their installation procedure. The top of all drilled shafts within a substructure unit shall be constructed to the same elevation and extend above the prevailing water surface. The quantities and reinforcement detailing are based on the top of shaft and the estimated elevations shown and may change based on the actual elevations encountered at each shaft and the final top of shaft elevation.

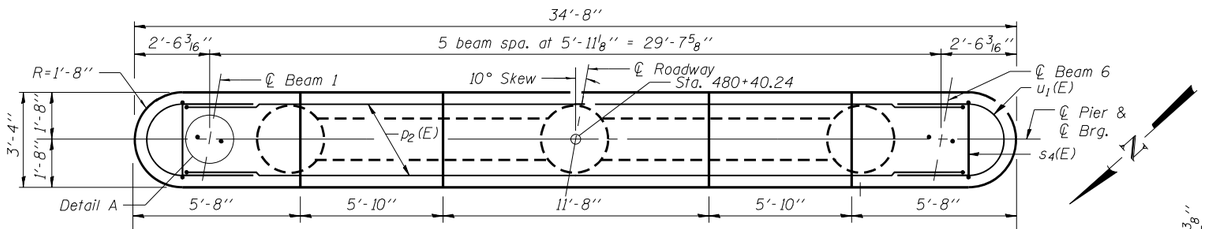

TOP PLAN

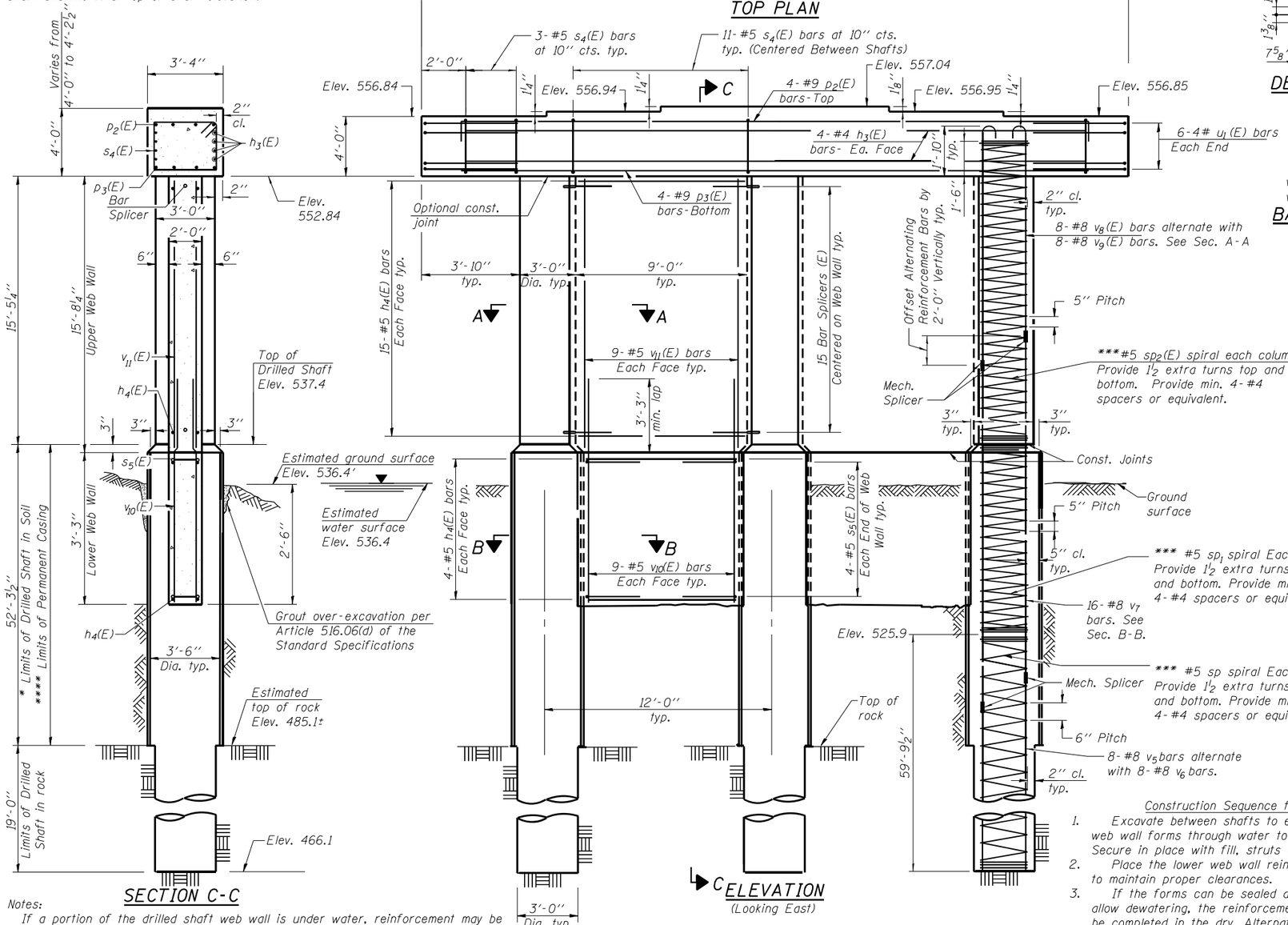

ELEVATION
(Looking East)

SECTION C-C

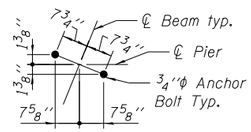

DETAIL A

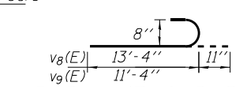

BAR v8(E) & BAR v9(E)

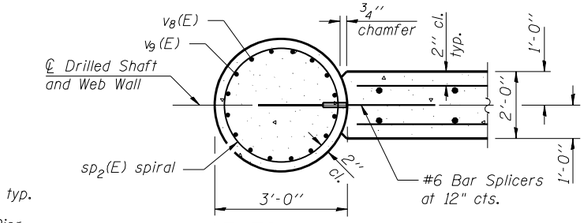

SECTION A-A

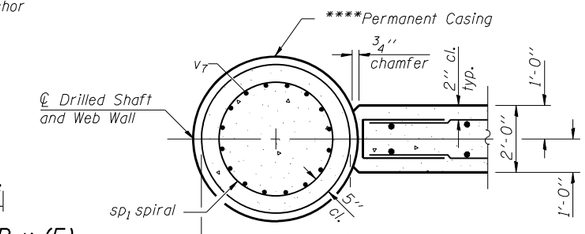

SECTION B-B

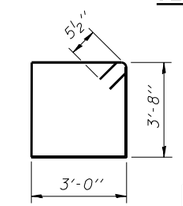

BAR s4(E)

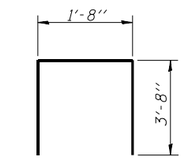

BARS s5(E)

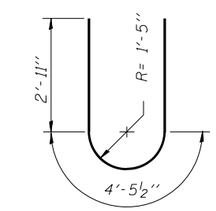

BAR u1(E)

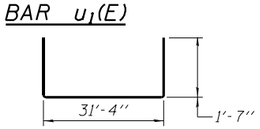

BAR p2(E)

BILL OF MATERIAL

Bar	No.	Size	Length	Shape
h3(E)	8	#4	31'-4"	
h4(E)	76	#5	8'-8"	
p2(E)	4	#9	34'-6"	
p3(E)	4	#9	31'-4"	
s4(E)	28	#5	14'-3"	
s5(E)	16	#5	9'-0"	
** sp	3	#5	59'-7"	
** sp1	3	#5	11'-4"	
** sp2(E)	3	#5	16'-9"	
u1(E)	12	#4	10'-4"	
v5	24	#8	25'-3"	
v6	24	#8	27'-3"	
v7	48	#8	50'-0"	
v8(E)	24	#8	14'-3"	
v9(E)	24	#8	12'-3"	
v10(E)	36	#5	6'-4"	
v11(E)	36	#5	15'-4"	
Concrete Structures			Cu. Yd.	54.4
Reinforcement Bars			Pound	13,700
Reinforcement Bars, Epoxy Coated			Pound	6,020
Bar Splicers			Each	60
Drilled Shaft in Soil			Cu. Yd.	56.0
Drilled Shaft in Rock			Cu. Yd.	15.0
Structure Excavation			Cu. Yd.	9
Permanent Casing			Foot	157

Notes:

If a portion of the drilled shaft web wall is under water, reinforcement may be placed underwater into forms. Concrete shall be tremied according to article 503.08 of the standard specifications to an elevation of 1'-0" above the water line at the time of construction.

**** The Contractor is responsible for determining the casing thickness and the actual bottom of casing elevation, to be used at each drilled shaft. See Article 516.06(d) of the Standard Specifications. The limits of casing shall be adjusted as necessary, and as approved, such that the actual pay length of the casing extends to the as-encountered top of rock at each shaft.

*** When splicing of spiral reinforcement is necessary, the spirals shall be provided with 1 1/2 extra turns at the ends to be spliced. These additional turns shall either be welded together according to AWS D1.4, or shall both terminate with a 135° standard hook.

Construction Sequence for Web Wall:

1. Excavate between shafts to elevation of web wall base and set lower web wall forms through water to bear on the circular edge of drilled shafts. Secure in place with fill, struts or tie forms together as required.
2. Place the lower web wall reinforcement cage into the forms using spacers to maintain proper clearances.
3. If the forms can be sealed against the shafts and streambed to allow dewatering, the reinforcement and the concrete placement may be completed in the dry. Alternatively, the rebar cage can be lowered into position through water and the concrete discharged at the base of the excavation through a tremie pipe or pump hose, displacing water, sediment, and tainted concrete out the top of the forms.
4. Construct Columns.
5. Construct upper web walls.

Lap splices of spiral or vertical reinforcement will not be permitted.

Cast steps monolithically with cap.

Space cap reinforcement to miss anchor bolts.

** Length is height of spiral.

MODEL: Default
FILE NAME: P:\2019\1903880W09 - IL 8 Kickapoo CK Update (STRUCTURE)\4 CADD - DWG\4.4 Struct\0720231-68862-18-Pier 1.dgn

TWM ENGINEERING GEOSPATIAL SERVICES
TWM, INC. WWW.TWM-INC.COM
IL DESIGN FIRM LICENSE NO: 184-001220

USER NAME = jesker	DESIGNED - TJP	REVISED -	
	CHECKED - DJH	REVISED -	
PLOT SCALE = 0.1667 ' / in.	DRAWN - TJP	REVISED -	
PLOT DATE = 6/14/2022	CHECKED - DJH	REVISED -	

STATE OF ILLINOIS
DEPARTMENT OF TRANSPORTATION

PIER 1
STRUCTURE NO. 072-0231

SHEET 18 OF 27 SHEETS

F.A.S. RTE.	SECTION	COUNTY	TOTAL SHEETS	SHEET NO.
1388	(Z-2C-15D) BR-1	PEORIA	90	36
		CONTRACT NO. 68862		
		ILLINOIS	FED. AID PROJECT	

* If the prevailing water surface elevation during construction is consistently different than estimated on the plans, the contractor may propose an adjustment to the top of the drilled shaft elevation as part of their installation procedure. The top of all drilled shafts within a substructure unit shall be constructed to the same elevation and extend above the prevailing water surface. The quantities and reinforcement detailing are based on the top of shaft and the estimated elevations shown and may change based on the actual elevations encountered at each shaft and the final top of shaft elevation.

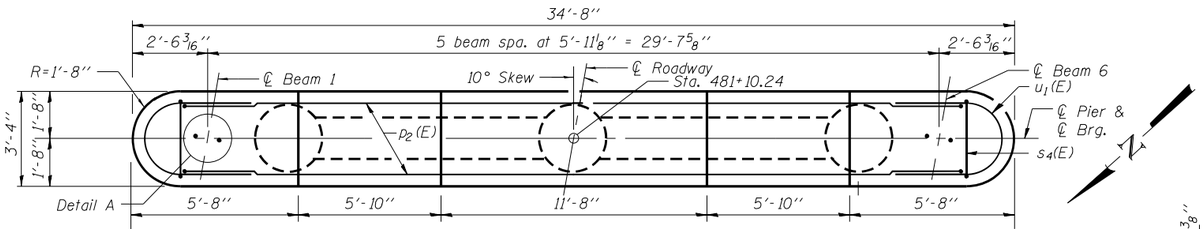

TOP PLAN

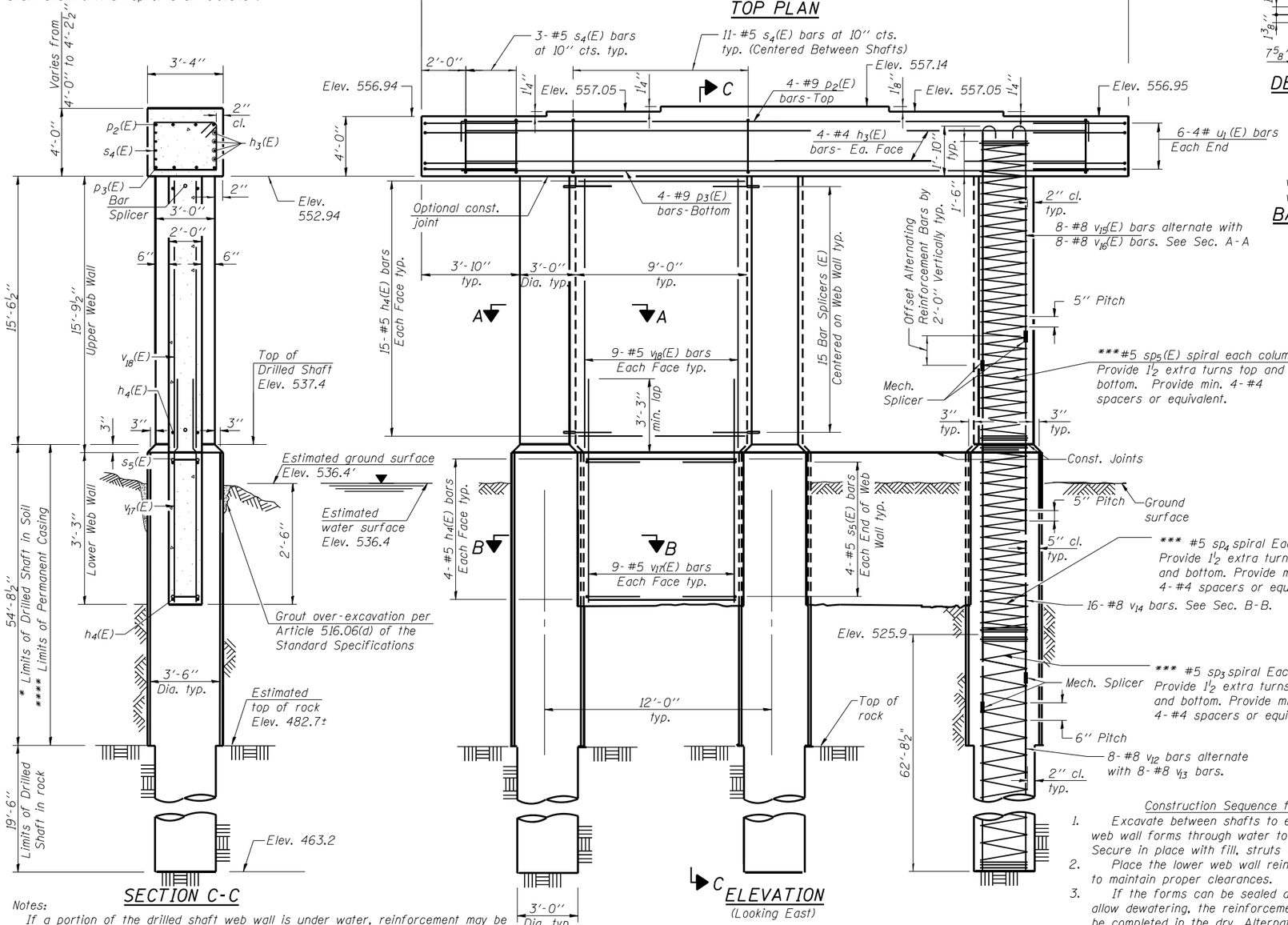

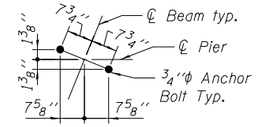

DETAIL A

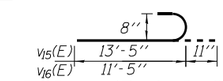

BAR $v_{15}(E)$ & BAR $v_{16}(E)$

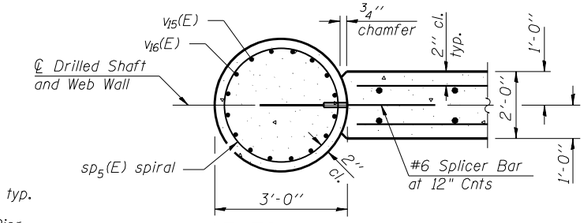

SECTION A-A

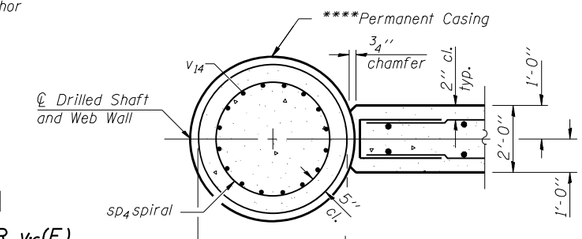

SECTION B-B

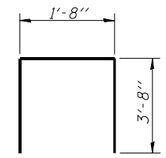

BARS $s_5(E)$

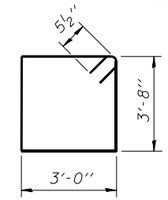

BAR $s_4(E)$

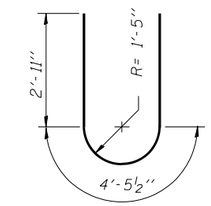

BAR $u_1(E)$

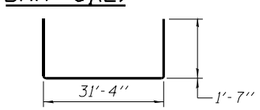

BAR $p_2(E)$

BILL OF MATERIAL

Bar	No.	Size	Length	Shape
$h_3(E)$	8	#4	31'-4"	
$h_4(E)$	76	#5	8'-8"	
$p_2(E)$	4	#9	34'-6"	
$p_3(E)$	4	#9	31'-4"	
$s_4(E)$	28	#5	14'-3"	
$s_5(E)$	16	#5	9'-0"	
** sp_3	3	#5	62'-6"	
** sp_4	3	#5	11'-4"	
** $sp_5(E)$	3	#5	16'-10"	
$u_1(E)$	12	#4	10'-4"	
v_{12}	24	#8	28'-3"	
v_{13}	24	#8	30'-3"	
v_{14}	48	#8	50'-0"	
$v_{15}(E)$	24	#8	14'-4"	
$v_{16}(E)$	24	#8	12'-4"	
$v_{17}(E)$	36	#5	6'-4"	
$v_{18}(E)$	36	#5	15'-6"	
Concrete Structures			Cu. Yd.	54.6
Reinforcement Bars			Pound	14,230
Reinforcement Bars, Epoxy Coated			Pound	6040
Bar Splicers			Each	60
Drilled Shaft in Soil			Cu. Yd.	58.5
Drilled Shaft in Rock			Cu. Yd.	15.4
Structure Excavation			Cu. Yd.	9
Permanent Casing			Foot	164

Notes:

If a portion of the drilled shaft web wall is under water, reinforcement may be placed underwater into forms. Concrete shall be tremied according to article 503.08 of the standard specifications to an elevation of 1'-0" above the water line at the time of construction.

**** The Contractor is responsible for determining the casing thickness and the actual bottom of casing elevation, to be used at each drilled shaft. See Article 516.06(d) of the Standard Specifications. The limits of casing shall be adjusted as necessary, and as approved, such that the actual pay length of the casing extends to the as-encountered top of rock at each shaft.

*** When splicing of spiral reinforcement is necessary, the spirals shall be provided with 1 1/2 extra turns at the ends to be spliced. These additional turns shall either be welded together according to AWS D1.4, or shall both terminate with a 135° standard hook.

Construction Sequence for Web Wall:

1. Excavate between shafts to elevation of web wall base and set lower web wall forms through water to bear on the circular edge of drilled shafts. Secure in place with fill, struts or tie forms together as required.
2. Place the lower web wall reinforcement cage into the forms using spacers to maintain proper clearances.
3. If the forms can be sealed against the shafts and streambed to allow dewatering, the reinforcement and the concrete placement may be completed in the dry. Alternatively, the rebar cage can be lowered into position through water and the concrete discharged at the base of the excavation through a tremie pipe or pump hose, displacing water, sediment, and tainted concrete out the top of the forms.
4. Construct Columns.
5. Construct upper web walls.

Lap splices of spiral or vertical reinforcement will not be permitted.

Cast steps monolithically with cap.

Space cap reinforcement to miss anchor bolts.

** Length is height of spiral.

MODEL: Default
FILE NAME: P:\2019\1903888\W09 - IL 8 Kickapoo CK Update (STRUCTURE)\4 CADD - DWG\4.4 Struc\0720231-68862-19-Pier 2.dgn

TWM ENGINEERING GEOSPATIAL SERVICES
TWM, INC. WWW.TWM-INC.COM
IL DESIGN FIRM LICENSE NO: 184-001220

USER NAME = jesker	DESIGNED - TJP	REVISED -	
	CHECKED - DJH	REVISED -	
PLOT SCALE = 0.1667 ' / in.	DRAWN - TJP	REVISED -	
PLOT DATE = 6/14/2022	CHECKED - DJH	REVISED -	

STATE OF ILLINOIS
DEPARTMENT OF TRANSPORTATION

PIER 2
STRUCTURE NO. 072-0231
SHEET 19 OF 27 SHEETS

F.A.S. RTE.	SECTION	COUNTY	TOTAL SHEETS	SHEET NO.
1388	(Z-2C-15D) BR-1	PEORIA	90	37
		CONTRACT NO. 68862		
		ILLINOIS FED. AID PROJECT		

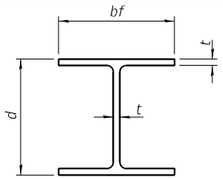

STEEL PILE TABLE

Designation	Depth d	Flange width bf	Web and Flange thickness t	Encasement diameter A
HP 14x117	14¼"	14⅞"	13/16"	30"
x102	14"	14¾"	11/16"	30"
x89	13⅞"	14¾"	⅝"	30"
x73	13⅝"	14⅝"	½"	30"
HP 12x84	12¼"	12¼"	11/16"	24"
x74	12⅛"	12¼"	⅝"	24"
x63	12"	12⅛"	½"	24"
x53	11¾"	12"	7/16"	24"
HP 10x57	10"	10¼"	9/16"	24"
x42	9¾"	10⅛"	7/16"	24"
HP 8x36	8"	8⅛"	7/16"	18"

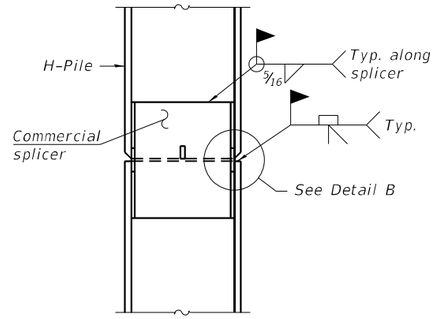

ELEVATION

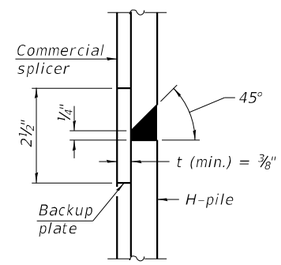

DETAIL "B"

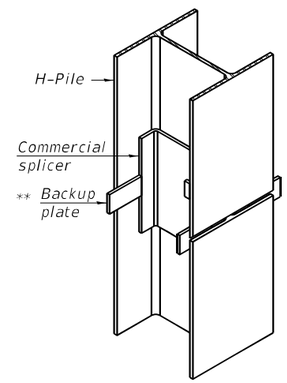

ISOMETRIC VIEW

WELDED COMMERCIAL SPLICE

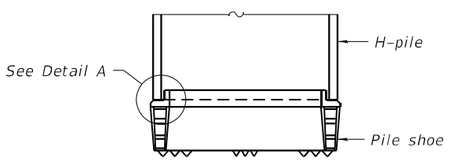

ELEVATION

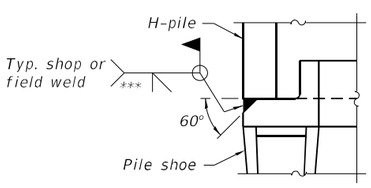

DETAIL A

SHOE ATTACHMENT

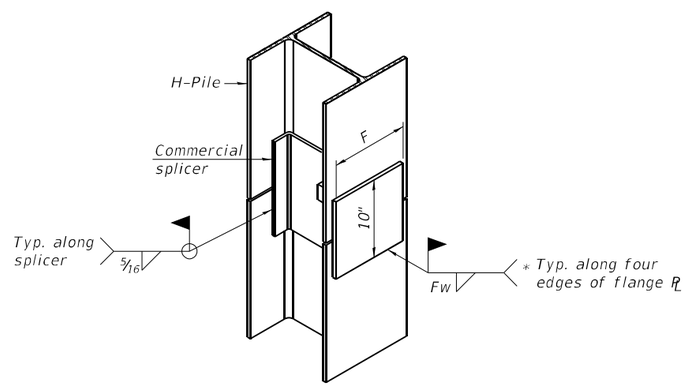

ISOMETRIC VIEW

WELDED COMMERCIAL SPLICE ALTERNATE

Note:
The steel H-piles shall be according to AASHTO M270 Grade 50.

* Interrupt welds ¼" from end of web and/or each flange.

** Remove portions of backup plates that extend outside the flanges.

*** Weld size per pile shoe manufacturer (5/16" min.).

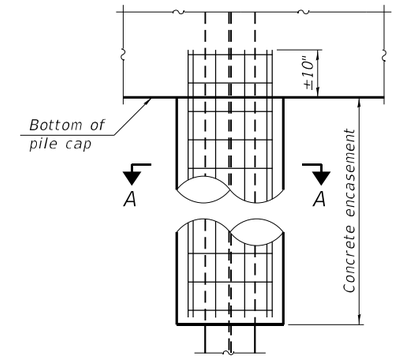

ELEVATION

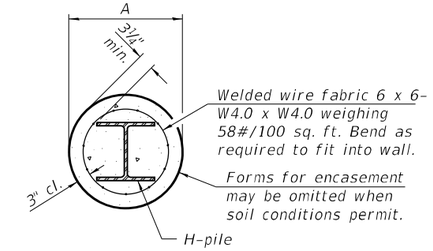

SECTION A-A

INDIVIDUAL PILE
CONCRETE ENCASEMENT
(when specified)

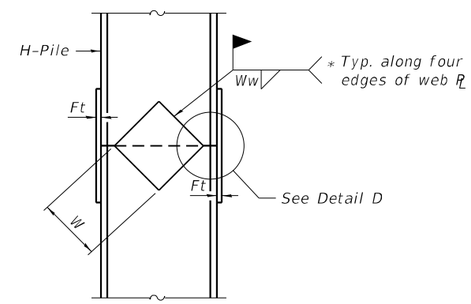

ELEVATION

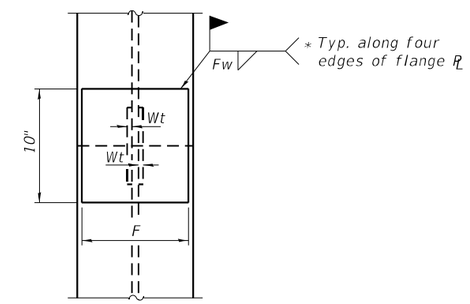

END VIEW

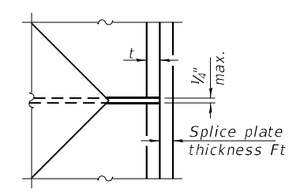

DETAIL D

Designation	F	Ft	Fw	W	Wt	Ww
HP 14x117	12½"	1"	⅞"	7¾"	⅝"	½"
x102	12½"	⅞"	¾"	7¾"	⅝"	½"
x89	12½"	¾"	11/16"	7¾"	⅝"	½"
x73	12½"	⅝"	9/16"	7¾"	⅝"	½"
HP 12x84	10"	⅞"	11/16"	6½"	⅝"	½"
x74	10"	⅞"	11/16"	6½"	⅝"	½"
x63	10"	⅝"	½"	6½"	½"	⅜"
x53	10"	⅝"	½"	6½"	½"	⅜"
HP 10x57	8"	¾"	9/16"	5¼"	½"	⅜"
x42	8"	⅝"	9/16"	5¼"	½"	⅜"
HP 8x36	7"	⅝"	7/16"	4¼"	½"	⅜"

WELDED PLATE FIELD SPLICE

F-HP 1-1-2020

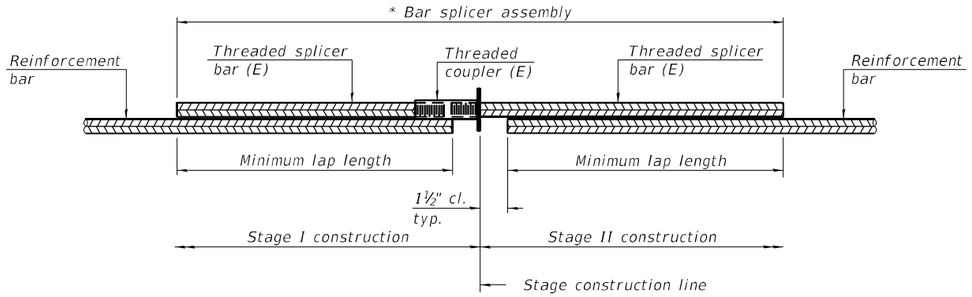

STANDARD BAR SPLICER ASSEMBLY PLAN

(All components shall be provided from one supplier)

Threaded splicer bar length = min. lap length + 1½" + thread length

* Epoxy not required on Bar Splicer Assembly components used in conjunction with black bars.

Location	Bar size	No. assemblies required	Minimum lap length
Pier 1	#6	60	3'-4"
Pier 2	#6	60	3'-4"

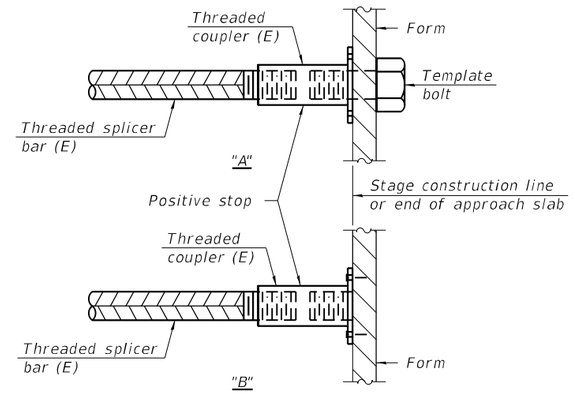

INSTALLATION AND SETTING METHODS

"A" : Set bar splicer assembly by means of a template bolt.
"B" : Set bar splicer assembly by nailing to wood forms or cementing to steel forms.
(E) : Indicates epoxy coating.

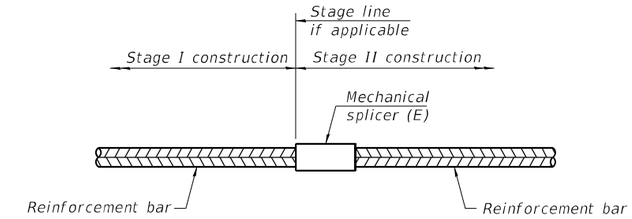

STANDARD MECHANICAL SPLICER

Location	Bar size	No. assemblies required
Pier 1	#8	96
Pier 2	#8	96

Notes:

Splicer bars shall be deformed with threaded ends and have a minimum 60 ksi yield strength.

All reinforcement shall be lapped and tied to the splicer bars.

Bar splicer assemblies shall be epoxy coated according to the requirements for reinforcement bars. See Section 508 of the Standard Specifications.

See approved list of bar splicer assemblies and mechanical splicers for alternatives.

BSD-1 1-1-2020

ILLINOIS DEPARTMENT OF TRANSPORTATION
Testing Service Corporation
STRUCTURE BORING LOG

Date 3/16/11

ROUTE IL 8 DESCRIPTION Bridge Over Kickapoo Creek

SECT. (Z-2C-15D)BR STRUCT. NO. 072-0231 DRILLED BY B. Williamson

COUNTY Peoria LOCATION Rosefield Township S. 7 , TWP. 9N , RNG. 6E

Boring No. B-1 W. Abutment
Station 479+85
Offset 30.00ft RT
Surface Elev. 544.10 ft

Surface Water Elev. 534.5
Groundwater Elev.:
when drilling 533.1
at Completion 534.1
after ____ Hrs. ____

Description	Elev.	Depth	Blows	Qu tsf	W %
Stiff dark brown SILTY CLAY LOAM, moist			2 3 4	B 1.93	18
	541.10				
Medium stiff dark brown SILTY LOAM, moist		-5	2 2 2	B 0.53	23
	538.60				
Soft to medium stiff dark brown SILTY LOAM, very moist		-10	1 1 1	B 0.41	32
			1 2 2	B 0.74	27
	533.60				
Very loose brown fine to coarse SAND, saturated		-15	2 2 2		
			2 2 2		
			3 2 1		44
	527.10				
Very loose dark brown organic SILT, very moist	526.10				
Loose brown fine to coarse SAND, saturated		-20	1 2 6		
	523.60				
Medium dense gray SANDY LOAM, moist			4 9 15		12
	521.10				
Hard gray SILTY LOAM, moist		-25	4 10 16	B 4.63	15
Hard gray SILTY LOAM, moist		-30	5 10 26	B 4.72	17
	516.10				
Hard dark brown SILTY LOAM, moist		-35	4 9 16	B 6.15	29
	512.10				
Hard gray SILTY LOAM, moist		-40	7 14 20	B 5.54	14
	507.10				
Loose gray fine SAND, saturated		-45	3 5 7		18
	504.60				
Loose gray SANDY LOAM, moist		-50	2 1 1		
	502.10				
Very loose gray fine to medium SAND, saturated					
	496.10				
Very dense brown fine to coase SAND and small GRAVEL, saturated			9 30 50/5"		

SPT. (N) = Sum of last two blow values in sample. (Qu) B=Bulge S=Shear P=Penetration Test
Stations, Depths, Offset, and Elevations are in Feet

ILLINOIS DEPARTMENT OF TRANSPORTATION
Testing Service Corporation
STRUCTURE BORING LOG

Date 3/16/11

STRUCTURE NO. 072-0231
ROUTE IL 8
SECTION (Z-2C-15D)BR
COUNTY Peoria

Boring No B-1 W. Abutment
Station 479+85
Offset 30.00ft RT
Elevation 494.10 ft

Description	Elev.	Depth	Blows	Qu tsf	W %
Very dense brown fine to coarse SAND and small GRAVEL, saturated					
	492.10				
Medium dense gray fine to medium SAND, some clay binder, saturated		-55	7 11 14		24
	487.10				
Hard gray SILTY LOAM, moist		-60	15 20 20	P 4.5+	9
	483.10				
Very dense black SHALE		-65	75 50/4"	P 4.5+	13
	478.10				
End of Boring at 66' - Auger Refusal		-70			
		-75			

SPT. (N) = Sum of last two blow values in sample. (Qu) B=Bulge S=Shear P=Penetration Test
Stations, Depths, Offset, and Elevations are in Feet

MODEL: Default
FILE NAME: P:\2019\190388\W09 - IL 8 Kickapoo CK Update (STRUCTURE)\4 CADD - DWG\4.4 Struct\0720231-68862-22-Boring Logs.dgn

TWM ENGINEERING GEOSPATIAL SERVICES	TWM, INC. WWW.TWM-INC.COM IL DESIGN FIRM LICENSE NO: 184-001220	USER NAME = jesker	DESIGNED - CAJ	REVISED -	STATE OF ILLINOIS DEPARTMENT OF TRANSPORTATION
			CHECKED - ALN	REVISED -	
		PLOT SCALE = 0.1667 ' / in.	DRAWN - CAJ	REVISED -	
		PLOT DATE = 6/14/2022	CHECKED - ALN	REVISED -	

SOIL BORINGS
STRUCTURE NO. 072-0231
SHEET 22 OF 27 SHEETS

F.A.S. RTE.	SECTION	COUNTY	TOTAL SHEETS	SHEET NO.
1388	(Z-2C-15D) BR-1	PEORIA	90	40
		CONTRACT NO. 68862		
		ILLINOIS FED. AID PROJECT		

ILLINOIS DEPARTMENT OF TRANSPORTATION
Testing Service Corporation
STRUCTURE BORING LOG

Date 3/15/11

ROUTE IL 8 DESCRIPTION Bridge Over Kickapoo Creek

SECT. (Z-2C-15D)BR STRUCT. NO. 072-0231 DRILLED BY B. Williamson

COUNTY Peoria LOCATION Rosefield Township S. 7 , TWP. 9N , RNG. 6E

Boring No. B-2 Pier 1
Station 480+35
Offset 30.00ft RT
Surface Elev. 544.60 ft

Surface Water Elev. 534.5
Groundwater Elev.:
when drilling 533.6
at Completion
after ____ Hrs.

Description	Elev.	Depth	Blows	Qu tsf	W %
Medium stiff dark brown SILTY LOAM, moist			1 1 3	P 0.75	20
Stiff dark brown SILTY LOAM, moist	541.60	-5	2 2 3	B 1.85	20
Medium stiff dark brown SILTY LOAM, very moist to moist	539.10	-10	1 1 2	B 0.53	32
			0 1 2	P 0.49	23
Soft gray SILTY LOAM, moist	534.10	-15	0 1 1	B 0.25	27
Very loose to loose gray fine to medium SAND, saturated	531.60	-20	0 1 1		23
			3 4 4		
			2 3 3		
			2 2 3		
Hard gray SILTY LOAM, moist	521.60	-25	4 5 5	P 4.5+	13
Hard gray silty LOAM, moist			8 13 16	B 6.36	15
	514.60	-30	5 8 10	B 4.51	21
Medium dense dark brown SILT, moist	513.60				
Medium dense gray fine to medium SAND, saturated	510.60	-35	5 10 19	B 6.85	16
Hard gray SILTY LOAM, moist	507.60	-40	5 12 13		18
Medium dense gray SILT, moist	502.60	-45	5 9 13		19
Medium dense gray fine SAND, saturated	496.60	-50	6 50/5"		
Very dense brown fine to coarse SAND and small GRAVEL, saturated					

SPT. (N) = Sum of last two blow values in sample. (Qu) B=Bulge S=Shear P=Penetration Test
Stations, Depths, Offset, and Elevations are in Feet

ILLINOIS DEPARTMENT OF TRANSPORTATION
Testing Service Corporation
STRUCTURE BORING LOG

Date 3/15/11

STRUCTURE NO. 072-0231
ROUTE IL 8
SECTION (Z-2C-15D)BR
COUNTY Peoria

Boring No. B-2 Pier 1
Station 480+35
Offset 30.00ft RT
Elevation 494.60 ft

Description	Elev.	Depth	Blows	Qu tsf	W %
Very dense brown fine to coarse SAND and small GRAVEL, saturated	492.60				
Medium dense gray fine SAND, saturated		-55	10 12 18		
Very dense brown fine to coarse SAND and small GRAVEL, saturated	487.60				
Very dense gray SHALE	485.10	-60	13 44 50/3"		24
Boring continued with rock core		-65	31 50/3"		13
		-70			
		-75			

SPT. (N) = Sum of last two blow values in sample. (Qu) B=Bulge S=Shear P=Penetration Test
Stations, Depths, Offset, and Elevations are in Feet

MODEL: Default
FILE NAME: P:\2019\190388\W09 - IL 8 Kickapoo CK Update (STRUCTURE)\4 CADD - DWG\4.4 Struct\0720231-68862-23-Boring LogS.dgn

TWM ENGINEERING GEOSPATIAL SERVICES	TWM, INC. WWW.TWM-INC.COM IL DESIGN FIRM LICENSE NO: 184-001220	USER NAME = jesker	DESIGNED - CAJ	REVISED -	STATE OF ILLINOIS DEPARTMENT OF TRANSPORTATION
			CHECKED - ALN	REVISED -	
		PLOT SCALE = 0.1667 ' / in.	DRAWN - CAJ	REVISED -	
		PLOT DATE = 6/14/2022	CHECKED - ALN	REVISED -	

SOIL BORINGS
STRUCTURE NO. 072-0231
SHEET 23 OF 27 SHEETS

F.A.S. RTE.	SECTION	COUNTY	TOTAL SHEETS	SHEET NO.
1388	(Z-2C-15D) BR-1	PEORIA	90	41
		CONTRACT NO. 68862		
		ILLINOIS FED. AID PROJECT		

Testing Service Corporation

STRUCTURE ROCK CORING LOG

Date 3/15/11

ROUTE IL 8 DESCRIPTION Bridge Over Kickapoo Creek

SECT. (Z-2C-15D)BR STRUCT. NO. 072-0231 DRILLED BY B. Williamson

COUNTY Peoria

Boring No. B-2 Pier 1 Core Type NX
Station 480+35 Core Diameter 2 in
Offset 30.00ft RT Core Length 15 ft

Surface Elev. 544.60 ft

Top Elev. ft	Coring Notes and Rock Description		Core Run (#)	RECOVERY (%)	R.Q.D. (%)	CORE TIME (Min/ft)	COMP. STRENGTH (tsf)
	Very dense gray SHALE		1	95	75		
477.60							
	Very dense black SHALE						
	Moisture Content = 6%						206.1
		-70.0					
	Moisture Content = 6%						154.8
		-75.0	2	100	80		
464.60		-80.0					
	End of Boring at 80.0'						
		-85.0					

Color pictures of the cores Yes

Cores will be stored for examination until _____

ILLINOIS DEPARTMENT OF TRANSPORTATION
Testing Service Corporation
STRUCTURE BORING LOG

Date 3/17/11

ROUTE IL 8 DESCRIPTION Bridge Over Kickapoo Creek

SECT. (Z-2C-15D)BR STRUCT. NO. 072-0231 DRILLED BY B. Williamson

COUNTY Peoria LOCATION Rosefield Township S. 7 , TWP. 9N , RNG. 6E

Boring No. B-3 Pier 2
Station 481+15
Offset 13.00ft LT
Surface Elev. 560.70 ft

Surface Water Elev. 534.5
Groundwater Elev.:
when drilling 539.7
at Completion 542.7
after ____ Hrs. ____

Description	Elev.	DEPTH	BLOWS	Qu tsf	W %
Pavment and aggregate base	559.20				
Medium stiff to stiff brown SILTY CLAY LOAM, moist			1 2 3	P 1.0	22
		-5	2 3 3	B 1.44	26
			1 2 2	B 0.57	27
		-10	1 2 2	P 1.0	24
Stiff brown-gray SILTY LOAM, moist	550.20		1 3 5	B 1.56	23
Stiff gray SILTY LOAM, moist	547.70	-15	1 2 4	B 1.48	25
Very loose brown SANDY LOAM, moist	545.20		1 2 2		19
		-20	1 1 2		24
Very loose gray-brown SANDY LOAM, moist	537.70	-25	0 0 1		26

Description	Elev.	DEPTH	BLOWS	Qu tsf	W %
Loose gray fine SAND, saturated	535.20		1 3 4		18
		-30	0 3 5		
Hard gray SILTY LOAM, moist	528.70	-35	10 15 15	P 4.5+	13
Medium dense dark brown SILT, moist	514.70	-45	6 9 18	P 4.5+	20
Hard gray SILTY LOAM, moist	511.70	-50	3 11 19	B 5.13	16

SPT. (N) = Sum of last two blow values in sample. (Qu) B=Bulge S=Shear P=Penetration Test
Stations, Depths, Offset, and Elevations are in Feet

ILLINOIS DEPARTMENT OF TRANSPORTATION
Testing Service Corporation
STRUCTURE BORING LOG

Date 3/17/11

STRUCTURE NO. 072-0231
ROUTE IL 8
SECTION (Z-2C-15D)BR
COUNTY Peoria

STRUCTURE NO. 072-0231
ROUTE IL 8
SECTION (Z-2C-15D)BR
COUNTY Peoria

Boring No. B-3 Pier 2
Station 481+15
Offset 13.00ft LT
Elevation 510.70 ft

Elevation 485.70 ft

Description	Elev.	DEPTH	BLOWS	Qu tsf	W %
Hard gray SILTY LOAM, moist	508.70				
Medium dense gray SANDY LOAM, moist		-55	4 4 11		21
		-60	3 5 6		22
Medium dense gray fine SAND, saturated	499.70	-65	3 5 7		19
Very dense brown fine to coarse SAND and small GRAVEL, saturated	493.70	-70	5 16 38		
Very dense brown fine to medium SAND, saturated	488.70	-75	21 44 50/4"		

Description	Elev.	DEPTH	BLOWS	Qu tsf	W %
Very dense brown fine to medium SAND, saturated	482.70				
Very dense gray SHALE		-80	16 100/5"		13
Boring continued with rock core		-85			
		-90			
		-95			
		-100			

SPT. (N) = Sum of last two blow values in sample. (Qu) B=Bulge S=Shear P=Penetration Test
Stations, Depths, Offset, and Elevations are in Feet

MODEL: Default
FILE NAME: P:\2019\190388\WO9 - IL 8 Kickapoo CK Update (STRUCTURE)\4 CADD - DWG\4.4 Struc\0720231-68862-25-Boring Logs.dgn

TWM ENGINEERING & GEOSPATIAL SERVICES
TWM, INC. WWW.TWM-INC.COM
IL DESIGN FIRM LICENSE NO: 184-001220

USER NAME = jesker	DESIGNED - CAJ	REVISED -	
	CHECKED - ALN	REVISED -	
PLOT SCALE = 0.1667 ' / in.	DRAWN - CAJ	REVISED -	
PLOT DATE = 6/14/2022	CHECKED - ALN	REVISED -	

STATE OF ILLINOIS
DEPARTMENT OF TRANSPORTATION

SOIL BORINGS
STRUCTURE NO. 072-0231
SHEET 25 OF 27 SHEETS

F.A.S. RTE.	SECTION	COUNTY	TOTAL SHEETS	SHEET NO.
1388	(Z-2C-15D) BR-1	PEORIA	90	43
		CONTRACT NO. 68862		
	ILLINOIS	FED. AID PROJECT		

Testing Service Corporation
STRUCTURE ROCK CORING LOG

Date 3/17/11

ROUTE IL 8 DESCRIPTION Bridge Over Kickapoo Creek

SECT. (Z-2C-15D)BR STRUCT. NO. 072-0231 DRILLED BY B. Williamson

COUNTY Peoria

Boring No. B-3 Pier 2 Core Type NX
Station 481+15 Core Diameter 2 in
Offset 13.00ft LT Core Length 15 ft

Surface Elev. 560.70 ft

Top Elev. ft	Coring Notes and Rock Description		Core Run (#)	RECOVERY (%)	R.Q.D. (%)	CORE TIME (Min/ft)	COMP. STRNGTH (tsf)
	Very dense gray SHALE		1	98	88		
		-85.0					
	Moisture Content = 2%						95.2
	Moisture Content = 9%	-90.0					38.9
			2	100	100		
	Moisture Content = 8%						74.9
	Moisture Content = 10%	-95.0					40.3
464.70	End of Boring at 96'	-100.0					

Color pictures of the cores Yes

Cores will be stored for examination until

MODEL: Default
FILE NAME: P:\2019\190388\W09 - IL 8 Kickapoo CK Update (STRUCTURE)\4 CADD - DWG\4.4 Struc\0720231-68862-26-Boring Logs.dgn

TWM ENGINEERING GEOSPATIAL SERVICES
TWM, INC. WWW.TWM-INC.COM
IL DESIGN FIRM LICENSE NO: 184-001220

USER NAME = jesker	DESIGNED - CAJ	REVISED -	
	CHECKED - ALN	REVISED -	
PLOT SCALE = 0.1667 ' / in.	DRAWN - CAJ	REVISED -	
PLOT DATE = 6/14/2022	CHECKED - ALN	REVISED -	

STATE OF ILLINOIS
DEPARTMENT OF TRANSPORTATION

SOIL BORINGS
STRUCTURE NO. 072-0231

SHEET 26 OF 27 SHEETS

F.A.S. RTE.	SECTION	COUNTY	TOTAL SHEETS	SHEET NO.
1388	(Z-2C-15D) BR-1	PEORIA	90	44

CONTRACT NO. 68862

ILLINOIS FED. AID PROJECT

ILLINOIS DEPARTMENT OF TRANSPORTATION
Testing Service Corporation
STRUCTURE BORING LOG

Date 3/16/11

ROUTE IL 8 DESCRIPTION Bridge Over Kicakpoo Creek

SECT. (Z-2C-15D)BR STRUCT. NO. 072-0231 DRILLED BY B. Williamson

COUNTY Peoria LOCATION Rosefield Township S. 7 , TWP. 9N , RNG. 6E

Boring No. B-4 E. Abutment
Station 481+65
Offset 25.00ft LT
Surface Elev. 560.00 ft

Surface Water Elev. 534.5
Groundwater Elev.:
when drilling 534.0
at Completion 540.0
after ____ Hrs. ____

Description	Elev.	DEPTH	BLOWS	Qu tsf	W %
Stiff brown SILTY LOAM, moist			1 2 3	B 1.44	23
	557.00				
Medium stiff gray-brown SILTY LOAM, moist		-5	1 2 2	B 0.62	26
	554.50				
Medium dense brown SAND and GRAVEL, moist			6 7 7		15
	552.00				
Very stiff brown-dark brown SILTY LOAM, moist		-10	2 2 5	B 2.67	23
			10 11 12	P 2.5	24
	547.00				
Very stiff to stiff brown SILTY LOAM, very moist		-15	6 6 8	P 2.0	31
			3 5 4	B 2.05	32
		-20	2 2 4	B 1.44	32
	539.50				
Soft gray SILTY LOAM, moist			0 2 2	B 0.45	26
	537.00				
Stiff gray SILTY LOAM, moist		-25	1 2 3	B 1.03	18
	534.50				
Loose gray fine to coarse SAND and small GRAVEL, saturated		-30	2 3 5		
	532.00				
Dense gray fine to coarse SAND and small GRAVEL, saturated		-35	14 15 16		
	528.00				
Very dense gray SANDY LOAM, moist		-40	15 36 40		13
	523.00				
Hard gray SILTY LOAM, moist		-45	8 14 8	B 6.56	13
		-50	5 10 18	B 5.86	24
		-50	8 12 15	B 5.13	16

SPT. (N) = Sum of last two blow values in sample. (Qu) B=Bulge S=Shear P=Penetration Test
Stations, Depths, Offset, and Elevations are in Feet

ILLINOIS DEPARTMENT OF TRANSPORTATION
Testing Service Corporation
STRUCTURE BORING LOG

Date 3/16/11

STRUCTURE NO. 072-0231
ROUTE IL 8
SECTION (Z-2C-15D)BR
COUNTY Peoria

Boring No. B-4 E. Abutment
Station 481+65
Offset 25.00ft LT
Elevation 510.00 ft

Description	Elev.	DEPTH	BLOWS	Qu tsf	W %
Hard gray SILTY LOAM, moist					
	508.00				
Medium dense gray SANDY LOAM, moist		-55	5 11 18		17
	503.00				
Medium dense gray fine to coarse SAND and small GRAVEL, saturated		-60	9 11 15		
	497.00				
Very dense to dense gray fine to coarse SAND and small GRAVEL, saturated		-65	14 32 45		
		-70	11 13 63		
		-75	5 16 29		

STRUCTURE NO. 072-0231
ROUTE IL 8
SECTION (Z-2C-15D)BR
COUNTY Peoria

Elevation 485.00 ft

Description	Elev.	DEPTH	BLOWS	Qu tsf	W %
Dense gray fine to coarse SAND and small GRAVEL, saturated					
	482.50				
Very dense gray SHALE		-80	15 100/6"		12
	479.50				
End of Boring at 80.5' - Auger Refusal		-85			
		-90			
		-95			
		-100			

SPT. (N) = Sum of last two blow values in sample. (Qu) B=Bulge S=Shear P=Penetration Test
Stations, Depths, Offset, and Elevations are in Feet

MODEL: Default
FILE NAME: P:\2019\190388\W09 - IL 8 Kickapoo CK Update (STRUCTURE)\4 CADD - DWG\4.4 Struc\0720231-68862-27-Boring Logs.dgn

TWM ENGINEERING GEOSPATIAL SERVICES
TWM, INC. WWW.TWM-INC.COM
IL DESIGN FIRM LICENSE NO: 184-001220

USER NAME = jesker	DESIGNED - CAJ	REVISED -	
	CHECKED - ALN	REVISED -	
PLOT SCALE = 0.1667 ' / in.	DRAWN - CAJ	REVISED -	
PLOT DATE = 6/14/2022	CHECKED - ALN	REVISED -	

STATE OF ILLINOIS
DEPARTMENT OF TRANSPORTATION

SOIL BORINGS
STRUCTURE NO. 072-0231
SHEET 27 OF 27 SHEETS

F.A.S. RTE.	SECTION	COUNTY	TOTAL SHEETS	SHEET NO.
1388	(Z-2C-15D) BR-1	PEORIA	90	45
		CONTRACT NO. 68862		
	ILLINOIS	FED. AID PROJECT		

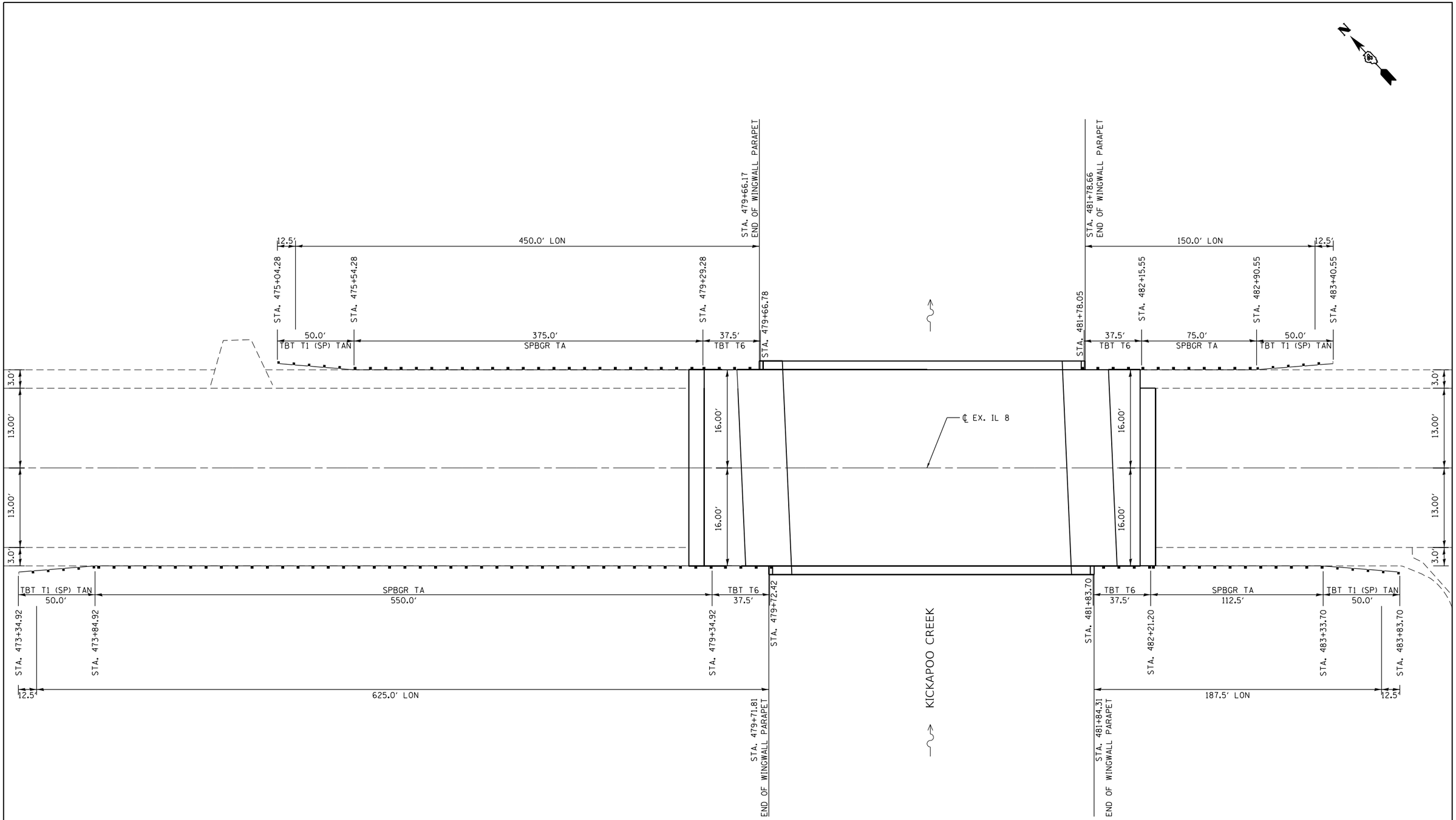

FILE NAME = D468862-sht-GR LON.dgn	USER NAME = efisher	DESIGNED -	REVISED -	STATE OF ILLINOIS DEPARTMENT OF TRANSPORTATION	MISCELLANEOUS DETAILS GUARDRAIL LENGTH OF NEED	F.A.S. RTE.	SECTION	COUNTY	TOTAL SHEETS / SHEET NO.
		DRAWN -	REVISED -			1388	(Z-2C-15D)BR-1	PEORIA	90 / 46
	PLOT SCALE = 60.0000 ' / in.	CHECKED -	REVISED -					CONTRACT NO. 68862	
Default	PLOT DATE = 6/14/2022	DATE -	REVISED -		SCALE: N.T.S. / SHEET 1 OF 1 SHEETS / STA. / TO STA.		ILLINOIS	FED. AID PROJECT	

SLOPE STEPS DETAIL

TYPICAL CROSS-SECTION EMBANKMENT
CONSTRUCTION ON SIDEHILL

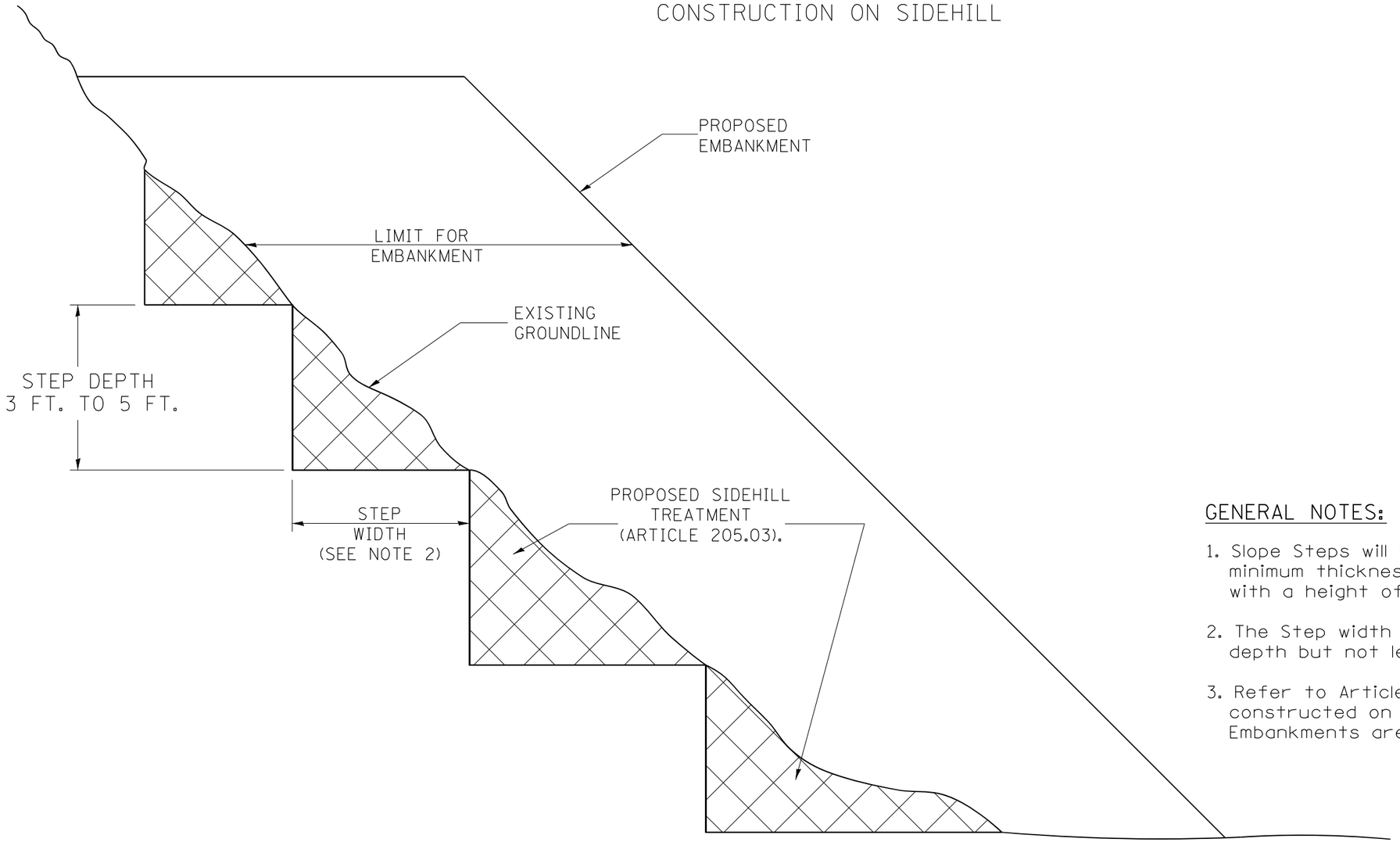

GENERAL NOTES:

1. Slope Steps will be required for all 12(300) minimum thickness "sliver fills" and on all fills with a height of 10 feet or greater.

2. The Step width shall be twice the Step depth but not less than 6 feet.

3. Refer to Article 205.03 for Embankment to be constructed on Hillside or Slopes, or if existing Embankments are to be widened.

REPLACEMENT MATERIAL:

STANDARD EMBANKMENT
(IN ACCORDANCE WITH
205 OF THE STANDARD SPECIFACATION).

All dimensions are in inches (millimeters) unless otherwise noted.

1-1-97	RENUM. L-5.03, NEW REVISION BOX, REVISED TITLE	T.P.
	BOX, REVISED GENERAL NOTES.	
10-16-06	REVISED TO 2007 SPEC.	M.A.
5-30-18	MINOR CORRECTION	R.D.

STATE OF ILLINOIS
DEPARTMENT OF TRANSPORTATION

SLOPE STEPS DETAIL

NOT TO SCALE

CADD STD. 205001-D4

F.A. RTE.	SECTION	COUNTY	TOTAL SHEETS	SHEET NO.
1388	(Z-2C-15D)BR-1	PEORIA	90	47
		CONTRACT NO. 68862		
FED. ROAD DIST. NO.	ILLINOIS	FED. AID PROJECT		

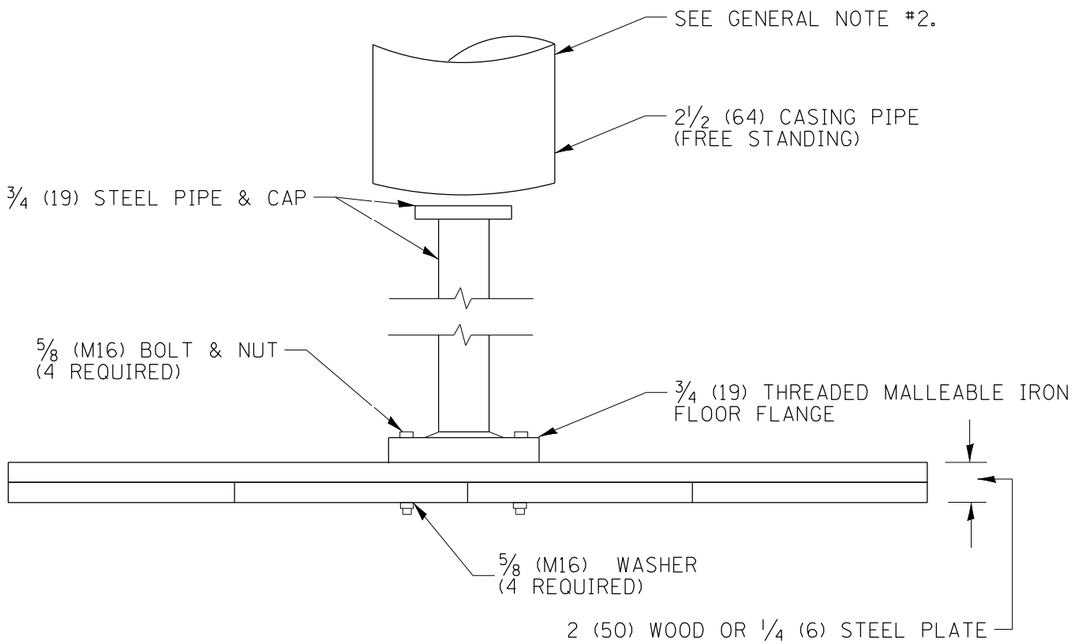

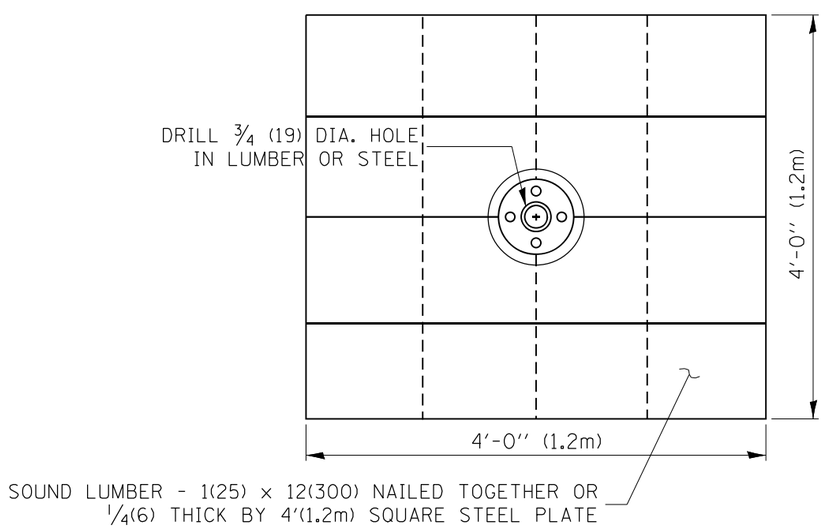

GENERAL NOTES:

1. Settlement Platform shall be in accordance with the appicable portions of Article 204.06 of the Standard Specifications.

2. Do Not install casing pipe until after one section of 3/4"(19 mm) has been covered with earth. The casing pipe should not rest on platform.

All dimensions are in inches (millimeters) unless otherwise noted.

1-1-97	RENUM. L-5.04, NEW REVISION BOX, REVISED NOTES.	T.P.	8-23-01	UPDATE FOR NEW SPEC.	M.A.	
	REVISED TITLE BOX		10-16-06	REVISED TO 2007 SPEC.	M.A.	
4-14-99	ADDED "CASING PIPE" REQUIREMENT	J.A.				
5-19-99	CORRECTIONS TO CASING PIPE	J.A.				

STATE OF ILLINOIS
DEPARTMENT OF TRANSPORTATION

SETTLEMENT PLATFORM

NOT TO SCALE

CADD STD. 205101-D4

F.A. RTE.	SECTION	COUNTY	TOTAL SHEETS	SHEET NO.
1388	(Z-2C-15D)BR-1	PEORIA	90	48
		CONTRACT NO. 68862		
FED. ROAD DIST. NO.	ILLINOIS	FED. AID PROJECT		

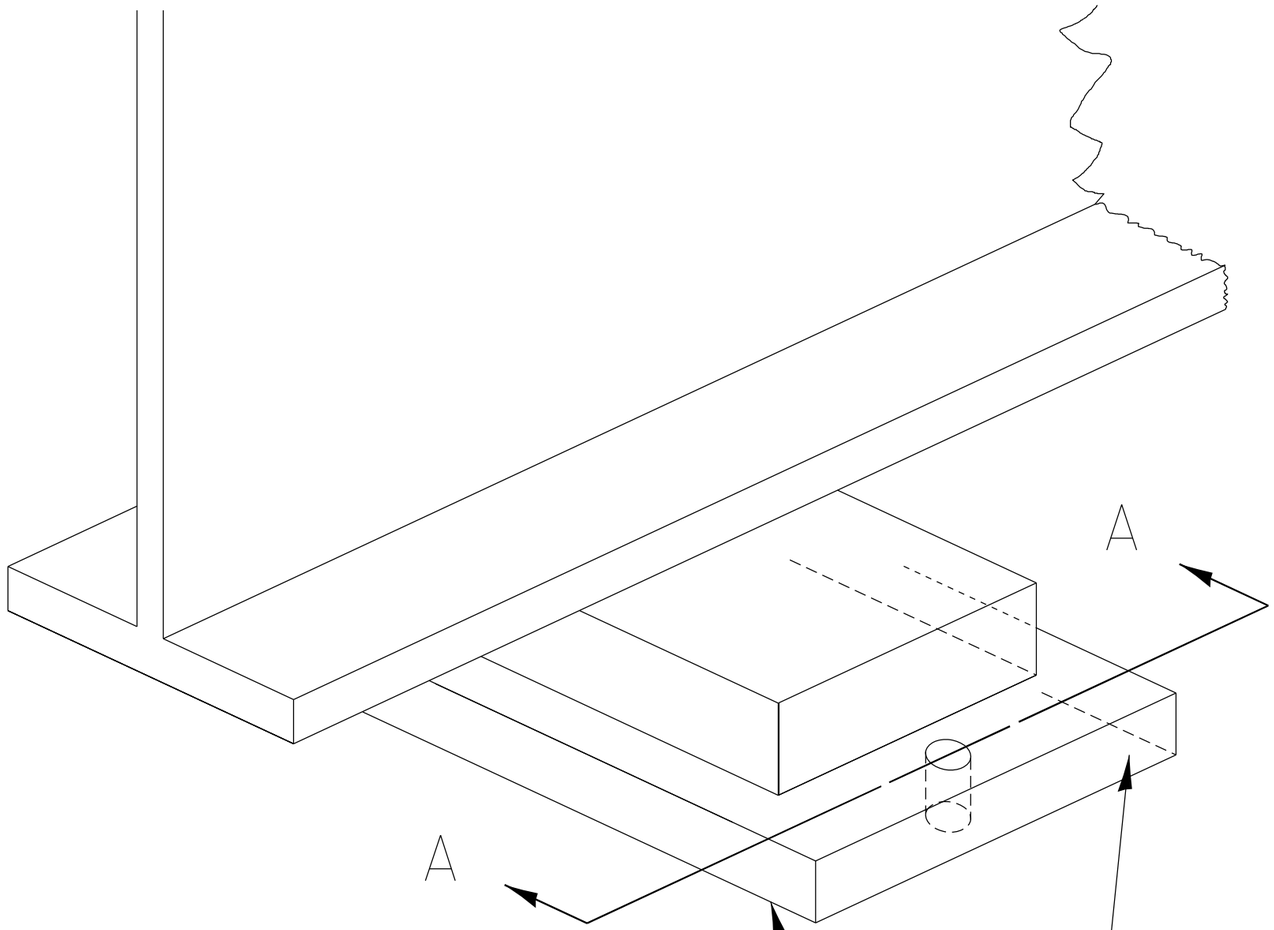

GENERAL NOTES

1. THIS WORK SHALL BE COMPLETED AFTER THE ANCHOR BOLTS HAVE BEEN INSTALLED & THE EPOXY HAS HARDENED.

2. THIS WORK DOES NOT APPLY TO BEARINGS AT INTEGRAL ABUTMENTS.

3. THIS WORK WILL NOT BE PAID FOR SEPARATELY. IT SHALL BE CONSIDERED INCLUDED IN THE COST OF THE PAY ITEM(S) PROVIDED FOR THE PROPOSED BEARINGS.

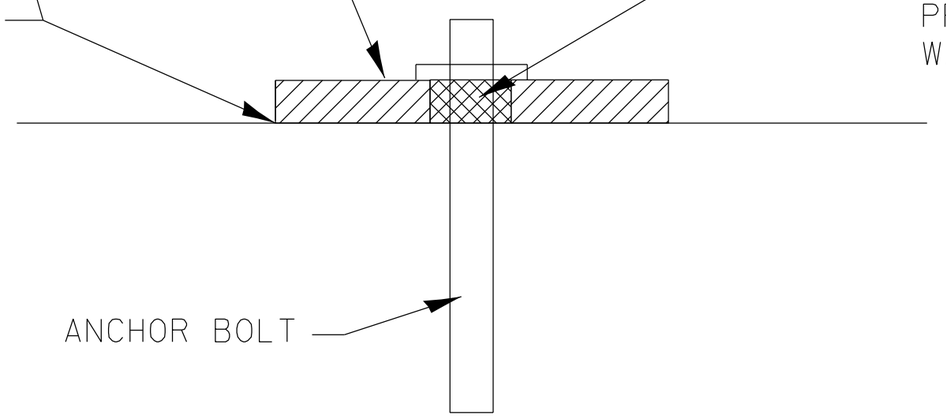

USE SILICONE CAULK TO COMPLETELY FILL AND SEAL THE VOID AROUND THE ANCHOR BOLT AT THE BASE PLATE PRIOR TO INSTALLING THE WASHER AND NUT.

SECTION A-A

All dimensions are in inches (millimeters) unless otherwise noted.

05/02/22	REVISED ALL NOTES	KH

STATE OF ILLINOIS
DEPARTMENT OF TRANSPORTATION

BEARING ANCHOR BOLT SEALANT

NOT TO SCALE

CADD STD. 505001-D4

F.A. RTE.	SECTION	COUNTY	TOTAL SHEETS	SHEET NO.
1388	(Z-2C-15D)BR-1	PEORIA	90	49
		CONTRACT NO. 68862		
FED. ROAD DIST. NO.	ILLINOIS	FED. AID PROJECT		

SLOPE DRAIN FOR BURIED PIPES

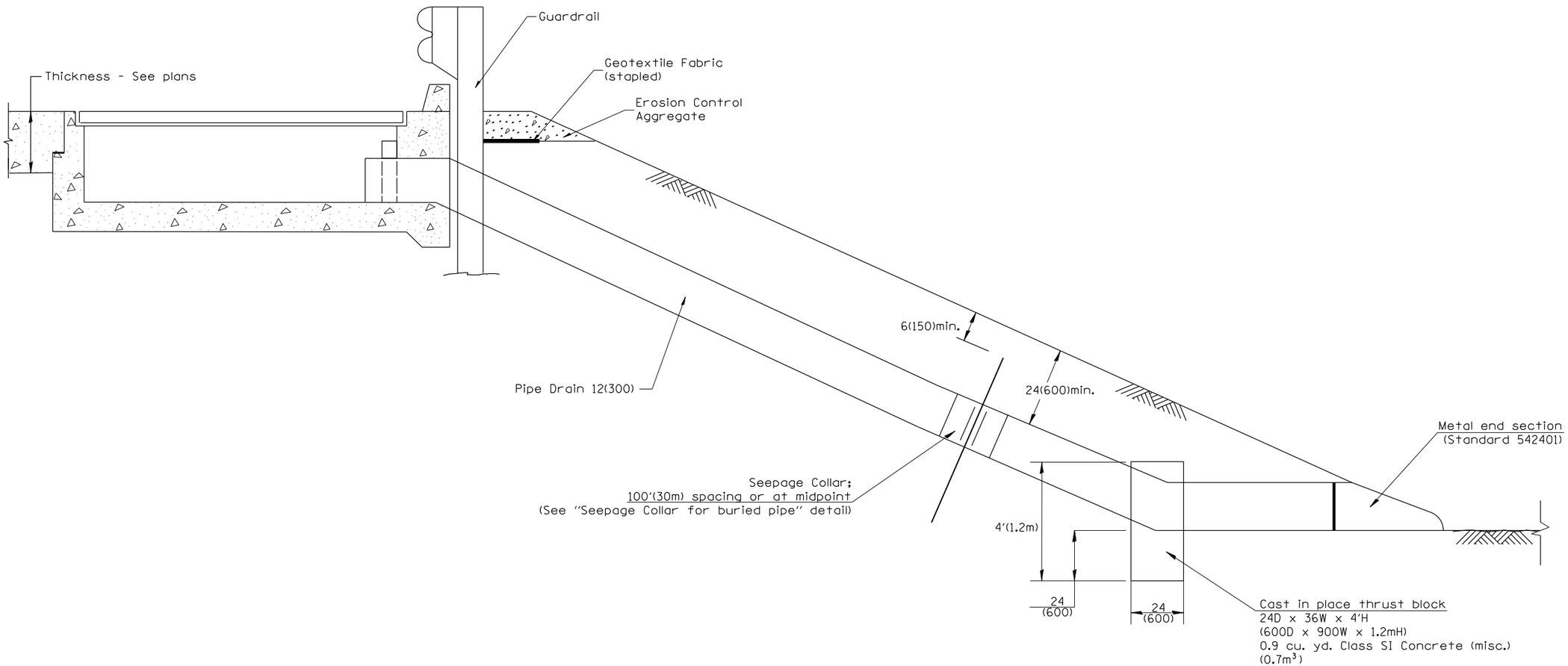

GENERAL NOTES

1. The material for Pipe Drains shall be bituminous coated galvanized corrugated steel culvert pipe or bituminous coated corrugated aluminum alloy pipe in accordance with Article 601.02(b) or 601.02(e) or Polyvinyl Chloride (PVC) pipe in accordance with Article 601.02 (s).

2. An approved mastic material (Article 1055.01) shall be applied to the inside of the connecting bands.

All dimensions are in inches (millimeters) unless otherwise noted.

QUANTITIES

CALC. BY: _____ DATE:

CHECKED BY: _____ DATE:

QUANTITY CALCULATIONS ARE ON FILE AT THE DISTRICT 4 OFFICE; BUREAU OF PROJECT IMPLEMENTATION; DOCUMENTATION SECTION

01-01-97	RENUM. H-1.04, NEW REVISION BOX, REVISED TITLE	T.P.	7-15-15	DELETED BC&D DETAIL FOR APPROACH DRAINS	R.D.
	BOX, REVISED DESIGNER NOTES, ADDED QUANTITY				
	CALCULATION BOX				
10-16-06	REVISED TO 2007 SPEC.	M.A.			

STATE OF ILLINOIS
DEPARTMENT OF TRANSPORTATION

SLOPE DRAIN DETAIL FOR BURIED PIPES

NOT TO SCALE

CADD STD. 601101-D4

F.A. RTE.	SECTION	COUNTY	TOTAL SHEETS	SHEET NO.
1388	(Z-2C-15D)BR-1	PEORIA	90	50
		CONTRACT NO. 68862		
FED. ROAD DIST. NO.	ILLINOIS	FED. AID PROJECT		

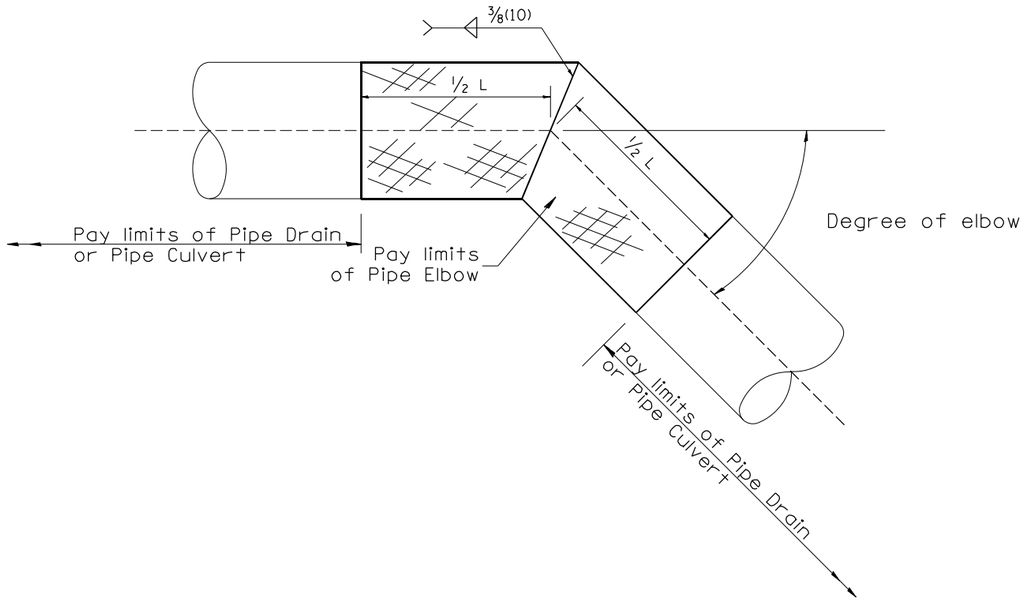

TABLE A		
ELBOW DESIGN CONTROLS		
PIPE DIAMETER	L = Pay limits of Pipe Elbow and minimum length of pipe required for fabrication	
	DEGREE OF ELBOW ≤ 45°	DEGREE OF ELBOW ≥ 46°
12(300)	24(600)	4'(1.22M)
15(375)	24(600)	4'(1.22M)
18(450)	24(600)	4'(1.22M)
21(525)	24(600)	4'(1.22M)
24(600)	4'(1.22M)	4'(1.22M)
30(750)	4'(1.22M)	6'(1.83M)
36(900)	4'(1.22M)	6'(1.83M)

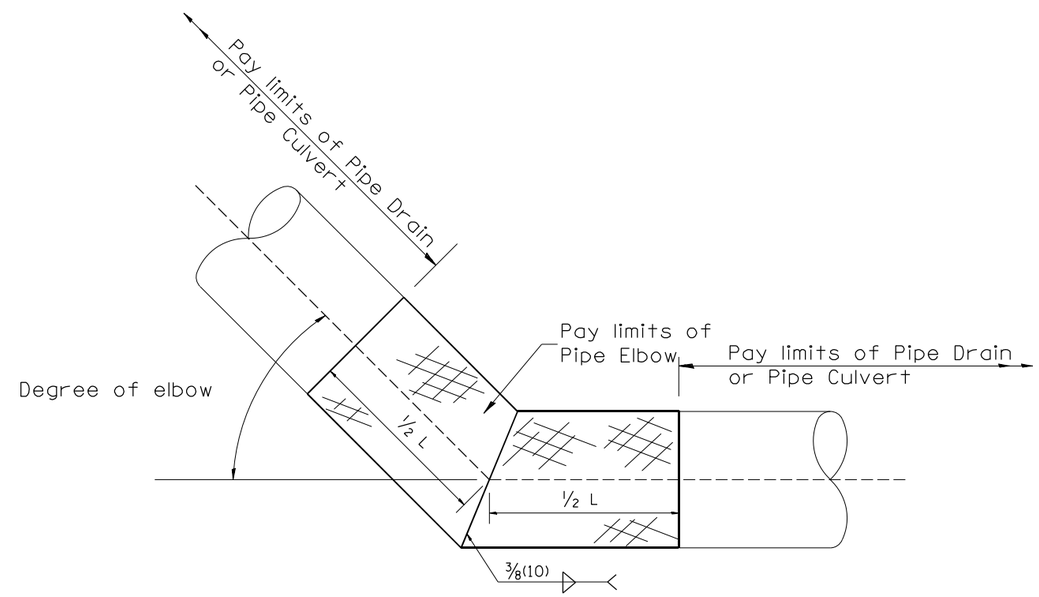

TABLE B	
ELBOW DESIGN CONTROLS	
EARTH SLOPE (V:H)	DEGREE OF ELBOW *
1:6	9°
1:4	14°
1:3	18°
1:2	26°
1:1 1/2	33°

* Approximate - based upon 0.5% inlet and outlet flowlines.

All dimensions are in inches (millimeters) unless otherwise noted.

01-01-97	RENUM. J-11.05, NEW REVISION BOX.	T.P.			
	REVISED TITLE BOX				
10-16-06	REVISED TO 2007 SPEC.	M.A.			

STATE OF ILLINOIS
DEPARTMENT OF TRANSPORTATION

PIPE ELBOW

NOT TO SCALE

CADD STD. 601301-D4

F.A. RTE.	SECTION	COUNTY	TOTAL SHEETS	SHEET NO.
1388	(Z-2C-15D)BR-1	PEORIA	90	51
		CONTRACT NO. 68862		
FED. ROAD DIST. NO.	ILLINOIS	FED. AID PROJECT		

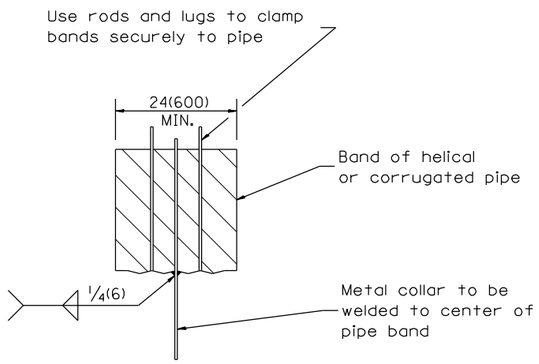

PARTIAL ELEVATION

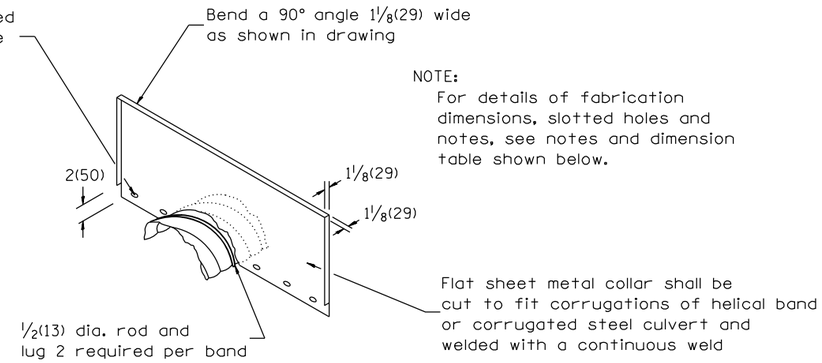

NOTE:
For details of fabrication dimensions, slotted holes and notes, see notes and dimension table shown below.

ISOMETRIC VIEW

DETAILS OF CORRUGATED PIPE COLLAR

NOTES FOR COLLARS:

1. Materials and coatings for all collars shall be the same as that specified for the pipe, except that bituminous coated steel or aluminum collars may be used with PVC pipe.

2. Collars shall be shop fabricated, assembled and marked by painting to identify matching half sections of each collar.

3. The laps between the half sections and between the pipe and connecting bands shall be caulked with fiberized asphalt mastic at the time of installation.

4. All tank lugs, rods, and nuts shall be galvanized steel. Where aluminum collars are used, The rods and lugs shall be separated from the aluminum bands. By at least two (2) layers of 2(50) wide plastic tape with a total thickness of 2 1/4 mils or more.

5. The collars shall be welded to the connecting bands as shown on the drawings, all welds shall be treated as specified for class I, II, and III welds, miscellaneous. (Refer to AWS Standard Specifications)

6. Bands shall be fabricated from material having the same class of corrugations as the pipe to which it is to be attached.

7. Upper half of sheet may be cut shorter to provide 6(150) min. earth cover.

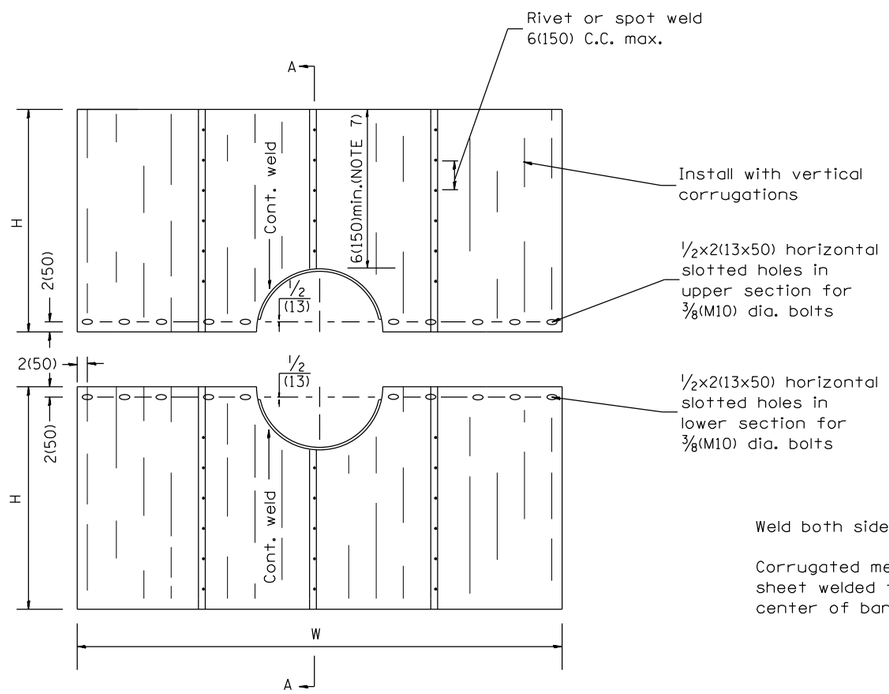

ELEVATION

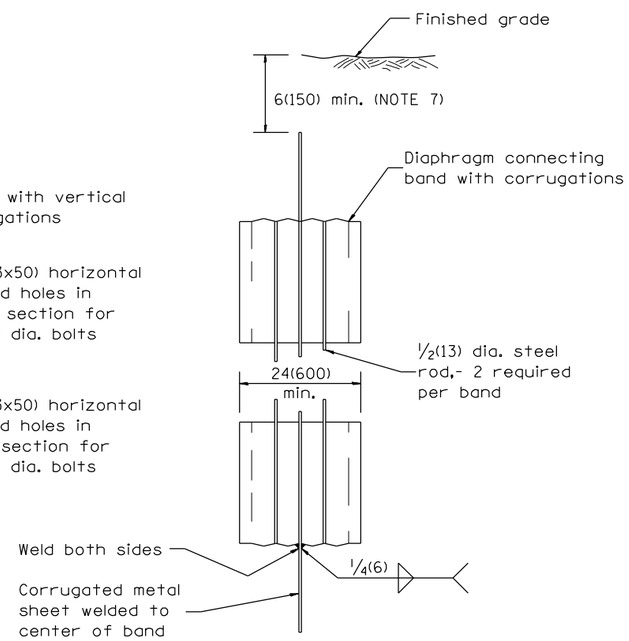

SECTION A-A

DETAILS OF SEEPAGE COLLAR

SEEPAGE COLLAR DIMENSION TABLE

PIPE DIAMETER	NOMINAL COLLAR SIZE	FABRICATIONS DIMENSIONS	
		W(WIDTH)	H(HEIGHT)
12(300) 15(375), 18(450) 21(525), 24(600)	8'x6' (2.4m x 1.8m)	8'-0" (2.44m)	38(966)
27(675) 30(750)	8'x7' (2.4m x 2.1m)	8'-0" (2.44m)	3'-8" (1.12m)
36(900), 42(1050) 48(1200)	10'x7' (3.0m x 2.1m)	10'-0" (3.05m)	3'-8" (1.12m)

Collar dimensions shown may be increased to allow fabrication from standard size sheets.

SEEPAGE COLLAR SPACING
Less than 24(600) pipe: 100' (30m) spacing or midpoint
Equal to or greater than 24(600) pipe: 80' (24m) spacing or midpoint

All dimensions are in inches (millimeters) unless otherwise noted.

01-01-97	RENUM. J-10.02, NEW REVISION BOX, REVISED	T.P.
	TITLE BOX, REVISED DESIGNER NOTES	
10-16-06	REVISED TO 2007 SPEC.	M.A.
7-15-15	REVISED NOTE 1 FOR PVC PIPE	R.D.

STATE OF ILLINOIS
DEPARTMENT OF TRANSPORTATION

DETAILS OF SEEPAGE COLLARS FOR BURIED PIPES

NOT TO SCALE

CADD STD. 601401-D4

F.A. RTE.	SECTION	COUNTY	TOTAL SHEETS	SHEET NO.
1388	(Z-2C-15D)BR-1	PEORIA	90	52
		CONTRACT NO. 68862		

FED. ROAD DIST. NO. | ILLINOIS | FED. AID PROJECT

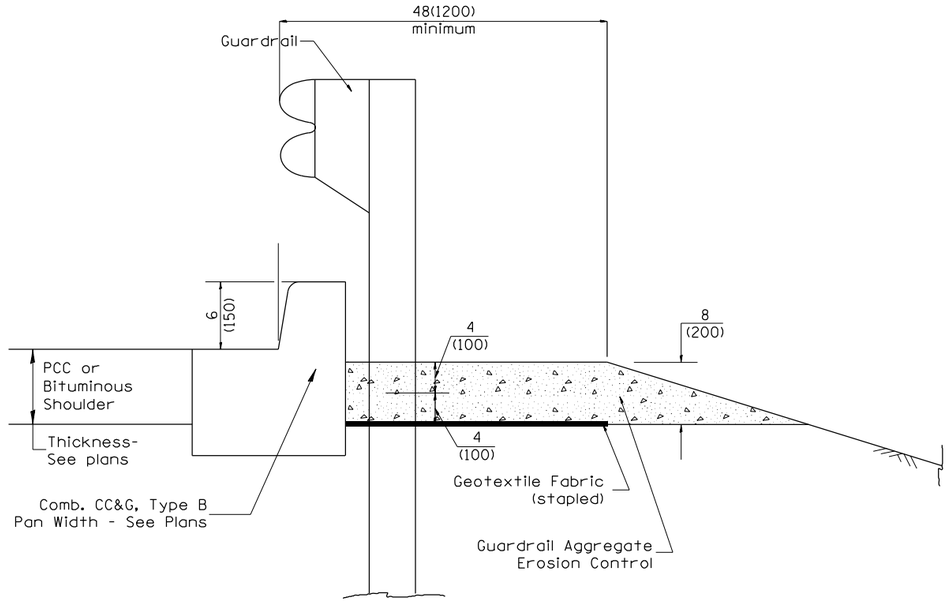

TYPICAL SECTION WITH COMBINATION CONCRETE CURB & GUTTER

GENERAL NOTES: GUARDRAIL AGGREGATE EROSION CONTROL

1. This work shall consist of grading as needed, furnishing and installing geotextile fabric and staples, and furnishing, placing and shaping crushed aggregate around and behind Steel Plate Beam Guardrail posts in accordance with Plan Details.

2. Before placing the aggregate and the Geotextile Fabric, weeds and grass shall be removed from the area to be covered.

3. After the area has been prepared, and in a dry condition, the Geotextile fabric shall be placed with a 12(300) minimum overlap. A knife cut for guardrail post installation is necessary.

4. The aggregate shall be deposited, compacted and shaped by either mechanical or hand methods, in a manner reasonably true to line and grade.

5. The Contractor shall have the option of placing the guardrail before or after the Geotextile Fabric and Aggregate are in place. If the guardrail is placed after the Geotextile Fabric and Aggregate, then any voids must be filled and the aggregate returned to line and grade.

6. Materials shall meet the following requirements:

   A. The crushed aggregate shall be CA1 gradation in accordance with Article 1004.01(c) of the Standard Specifications.

   B. The Geotextile Fabric shall be nonwoven fabric in accordance with Article 1080.02 of the Standard Specifications.

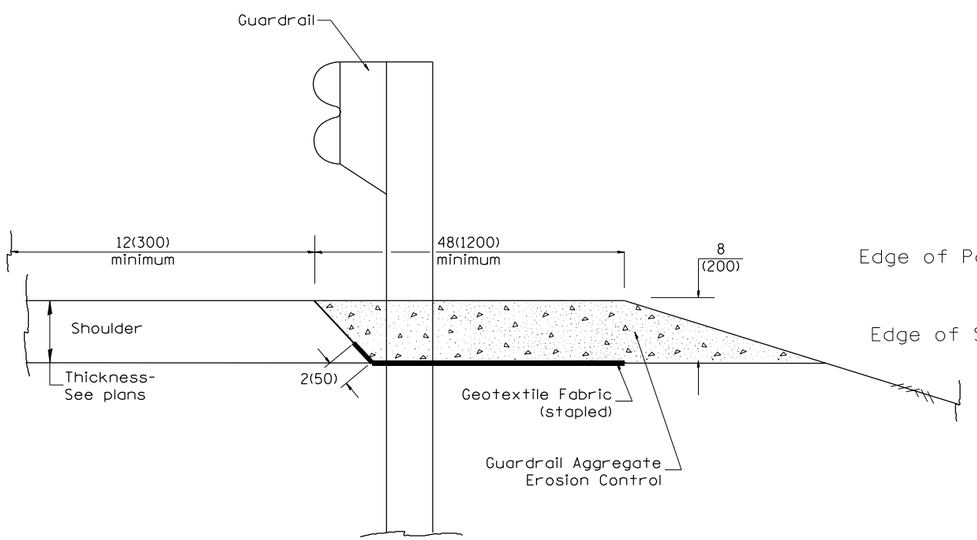

TYPICAL SECTION WITHOUT EROSION CONTROL CURB

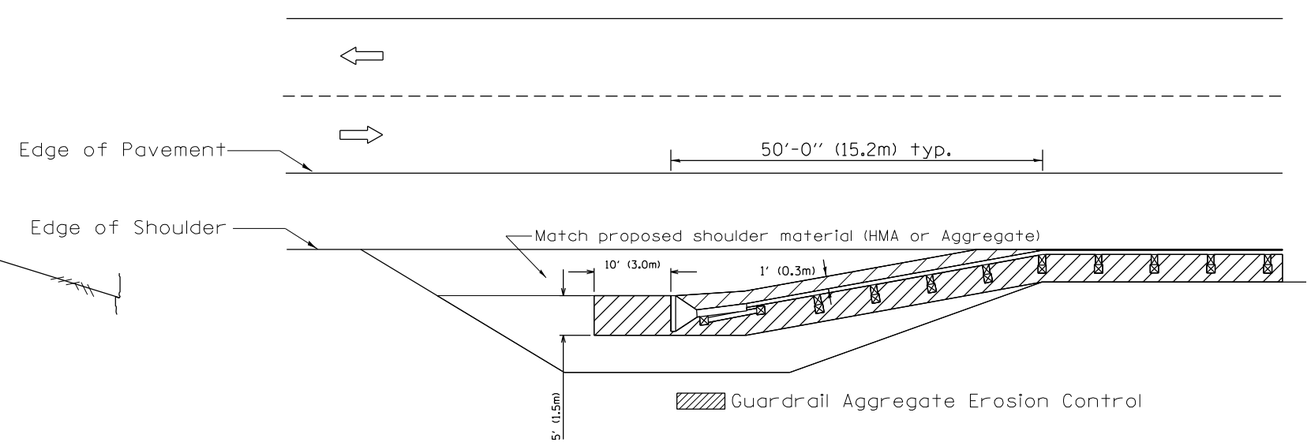

All dimensions are in inches (millimeters) unless otherwise noted.

03-07-11	ADDED DETAIL SHOWING PLAN VIEW	R.D.	5-30-18	CHANGE B CURB TO CC&G	R.D.
08-10-12	REVISED CURB "B" AND AGGREGATE	R.D.	07-16-19	SPELLING CORRECTIONS	R.D.
07-15-15	ADDRESSED SHOULDER INLET CURB	R.D.			
01-26-17	REVISED	R.D.			

STATE OF ILLINOIS
DEPARTMENT OF TRANSPORTATION

GUARDRAIL EROSION CONTROL TREATMENTS

NOT TO SCALE

SHT. 1 OF 2
CADD STD. 630101-D4

F.A. RTE.	SECTION	COUNTY	TOTAL SHEETS	SHEET NO.
1388	(Z-2C-15D)BR-1	PEORIA	90	53
		CONTRACT NO. 68862		
FED. ROAD DIST. NO.	ILLINOIS	FED. AID PROJECT		

DETAIL "A"

#4 reinforcement bars may be cast in PCC apron and precast inlet box or drilled and anchored with an approved chemical adhesive at 2' spacing. Cost of curb and reinforcement are included in the cost of shoulder inlet.

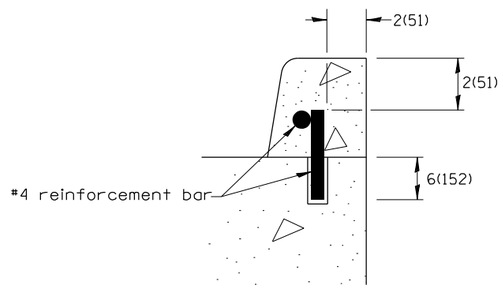

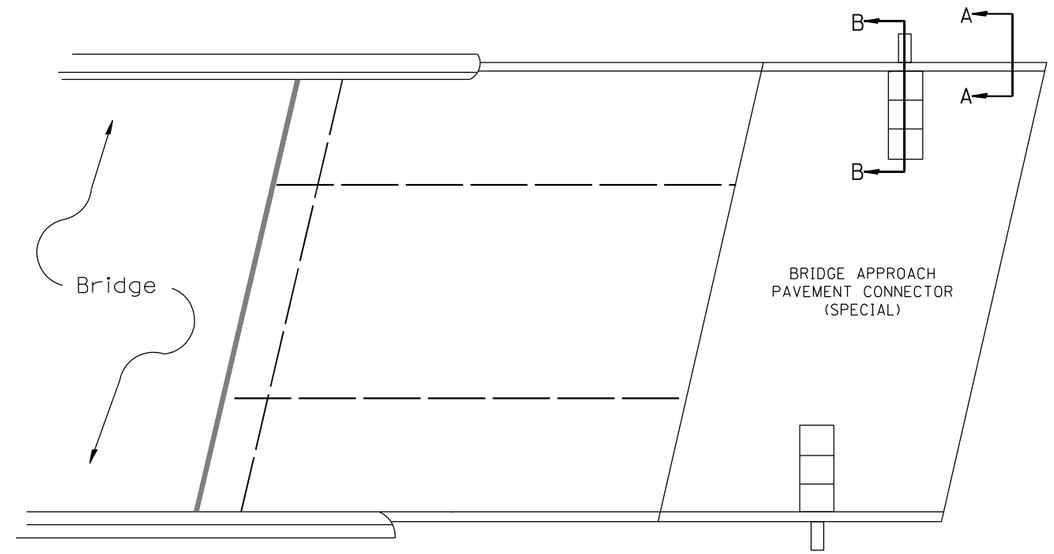

PLAN VIEW

APPROACH SLAB OR SHOULDER PLACEMENT

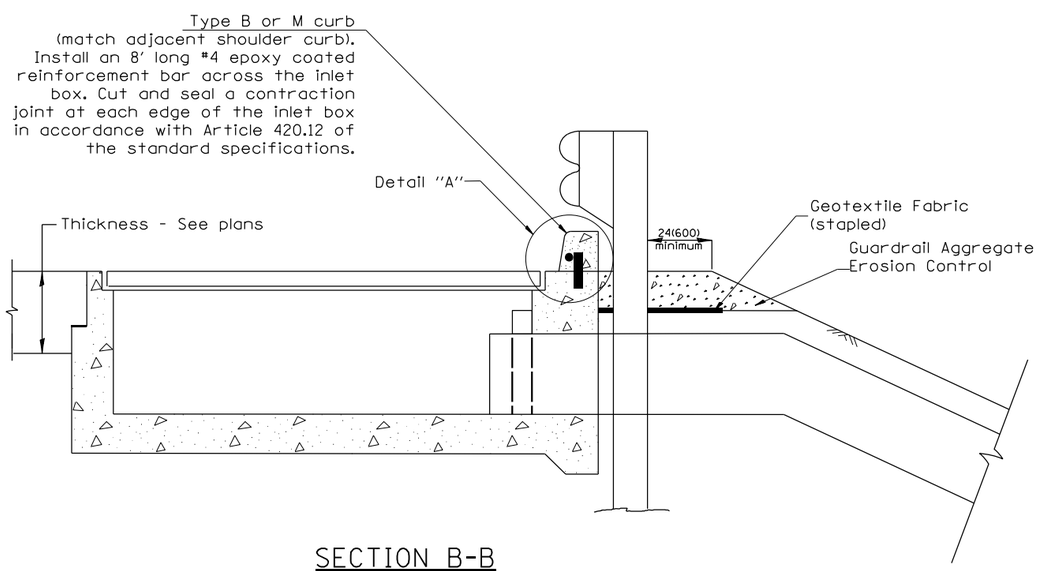

SECTION B-B

TYPICAL SECTION AT INLETS

TYPE E, F & G (HIGHWAY STANDARD 610001)

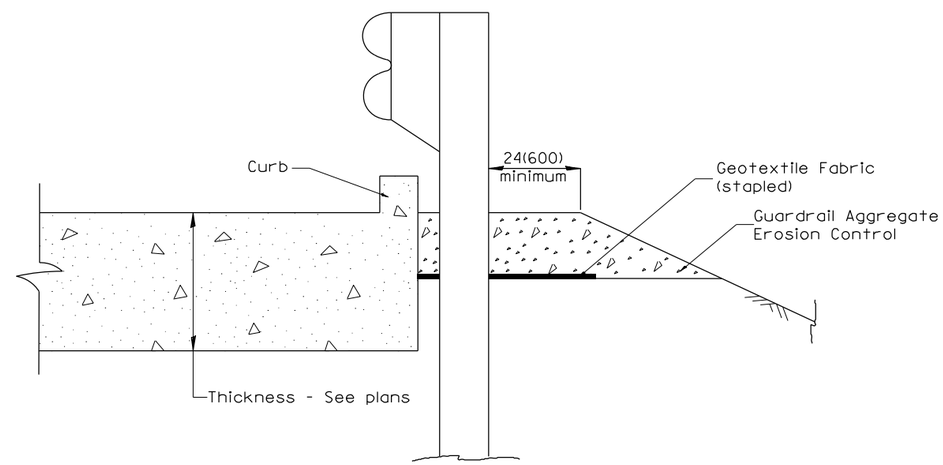

SECTION A-A

TYPICAL SECTION WITH BRIDGE APPROACH CURB

All dimensions are in inches (millimeters) unless otherwise noted.

STATE OF ILLINOIS
DEPARTMENT OF TRANSPORTATION

GUARDRAIL EROSION CONTROL TREATMENTS

NOT TO SCALE

SHT. 2 OF 2
CADD STD. 630101-D4

F.A. RTE.	SECTION	COUNTY	TOTAL SHEETS	SHEET NO.
1388	(Z-2C-15D)BR-1	PEORIA	90	54
		CONTRACT NO. 68862		
FED. ROAD DIST. NO.	ILLINOIS	FED. AID PROJECT		

PERMANENT SURVEY TIES

○ Permanent Survey Tie
□ Section Corner, 1/4 Corner, or other land corner.

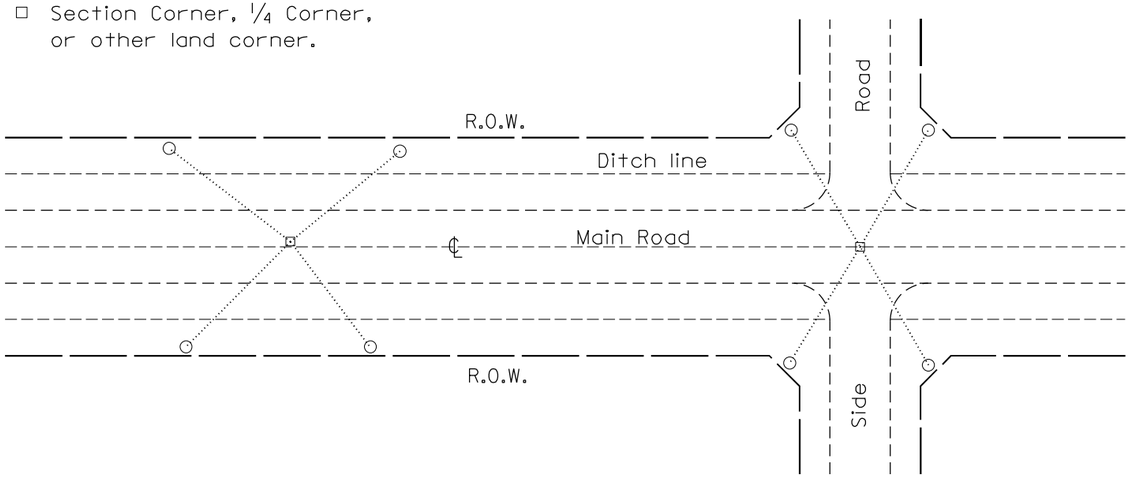

TYPICAL APPLICATION

GENERAL NOTES

1. The marker shall be cast in place of Class SI Concrete.
2. Tie marker shall be installed after the final seeding has been completed unless otherwise specified by the Engineer.
3. The tie distances to the section corner shall be measured and recorded by the surveyor setting the PSM. All ties shall be turned over to the IDOT Chief of Surveys or Chief of Plats after recordation.
4. All documentation shall be performed by a PLS
5. The metal tablet used on permanent survey markers shall be made of bronze.

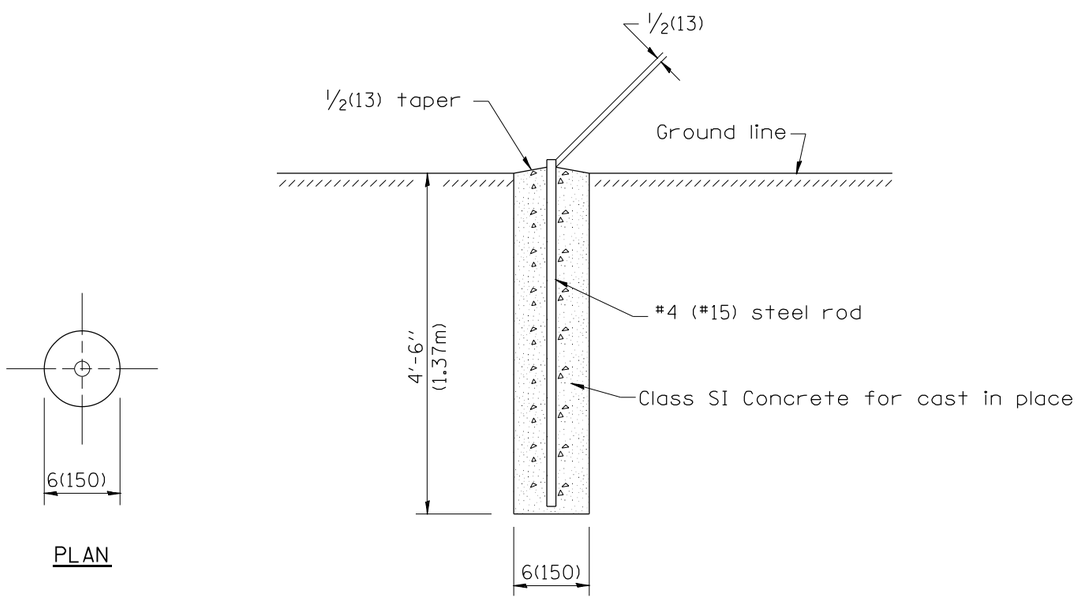

PLAN

SECTION

PERMANENT SURVEY MARKERS

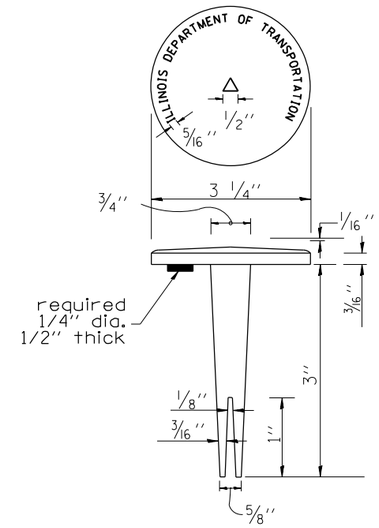

BRASS TABLET

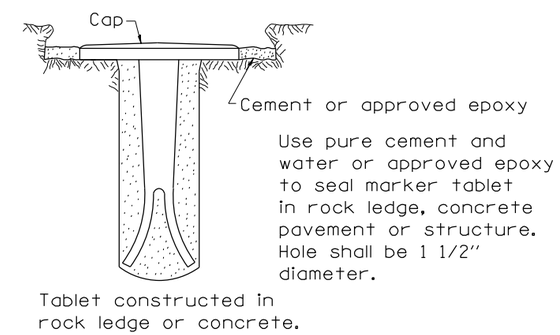

TYPE I

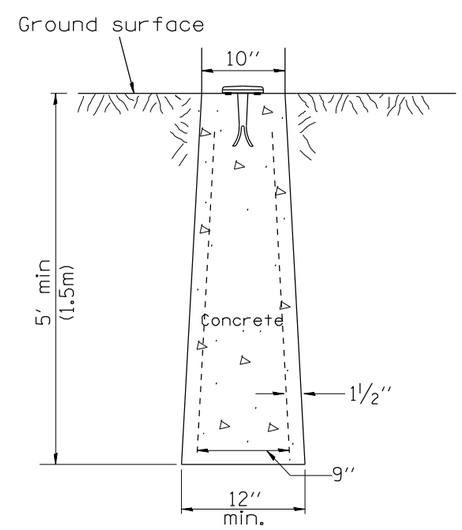

TYPE II
CAST-IN-PLACE MARKER

GENERAL NOTES

1. All type II markers shall be cast in place, and precast markers will not be allowed.
2. Two permanent magnets, each having a diameter of 3/4 (19) and a thickness of 1/4 (6), or equivalent, shall be attached to the underside of the tablet with an approved epoxy bonding agent.
3. The location of the markers shall be in accordance with the plans in general, the markers will be placed at the P.T.'s, P.C.'s, and P.I.'s llocated within the R.O.W. of horizontal curves and spaces along the tangents in a way that a minimum of two markers are always inter-visible, and not to exceed 1000' (300m).
4. The markers shall be placed under the direction of the Engineer and shall be installed in a workmanlike manner in order that there will be no further settlement or horizontal shifting. The monuments shall be placed in a way that the survey point will fall within the portion of the plaque provided for that purpose.
5. The project designation, the centerline station, the survey point, and the elevation shall be permanently marked by the use of metal dies after marker has been installed.

All dimensions are in inches (millimeters) unless otherwise noted.

01-01-97	RENUM. D-3.01, NEW REVISION BOX, REVISED	T.P.	10-16-06	REVISED TO 2007 SPEC.	M.A.
	TITLE BOX, ADD DESIGNER NOTE		01-04-11	REVISED FOR CORRECTIONS	R.D.
07-07-98	ADD DESIGNER NOTE	J.A.	08-21-13	CHANGED MIN. DIAMETER	R.D.
05-24-06	REMOVED GEN. NOTE UNDER TIES	M.A.	08-25-15	REVISED MATERIAL	R.D.

STATE OF ILLINOIS
DEPARTMENT OF TRANSPORTATION

PERMANENT SURVEY TIE &
PERMANENT SURVEY MARKERS TY.I – TY.II

NOT TO SCALE

CADD STD. 667101-D4

F.A. RTE.	SECTION	COUNTY	TOTAL SHEETS	SHEET NO.
1388	(Z-2C-15D)BR-1	PEORIA	90	55
		CONTRACT NO. 68862		

FED. ROAD DIST. NO. | ILLINOIS | FED. AID PROJECT

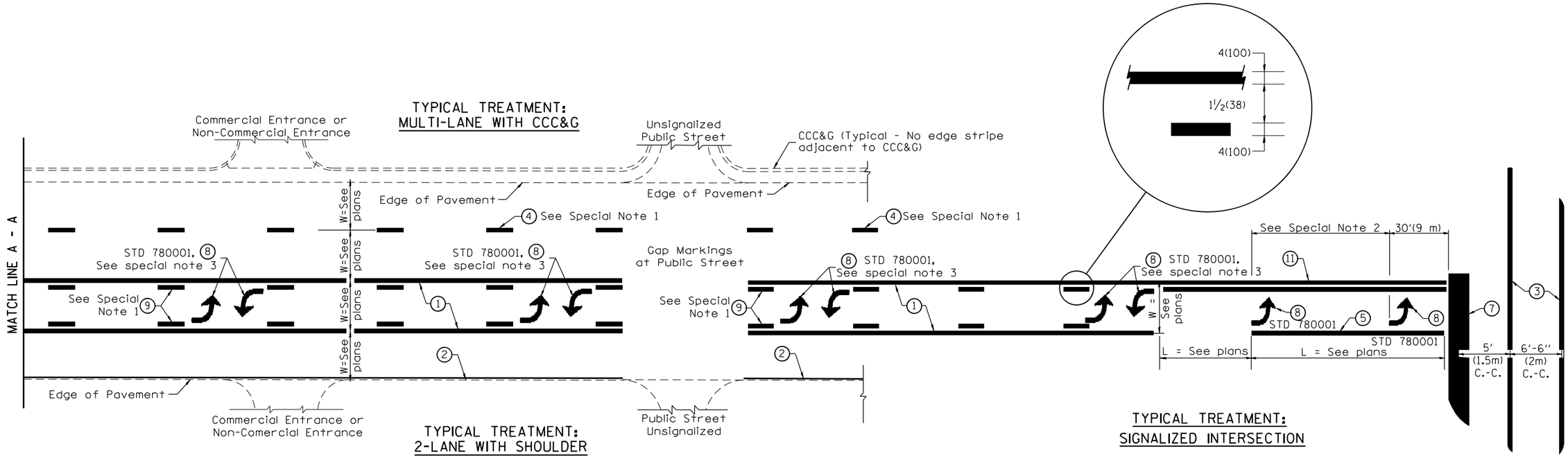

FLUSH PAVED MEDIAN: TWO-WAY LEFT TURN LANE WITH ONE-WAY LEFT TURN LANE AT SIGNALIZED INTERSECTION

TYPICAL PAVEMENT MARKING LEGEND

(Note: This is a District Standard Legend.
Some elements may not apply to specific project.)

1. 4(100) Solid (Yellow)
2. 4(100) Solid (White)
3. 2-6(150) Crosswalk @ 6'-6" (2m)min C.-C. (White)
   2-8(200) Crosswalk @ 6'-6" (2m)min C.-C. (White) (When traffic signals are present.)
4. 6(150) Skip-Dash (White) — 10' (3.05m) / 30' (9.14m) / 10' (3.05m) (See Special Note 1)
5. 8(200) Solid (White)
6. 12(300) Diagonal (White) (Item 6 is shown on Std. 780001)
7. 24(600) Stop Bar (White)
8. Letters & Arrows — 33' (10m) (See Std. 780001 and Special Notes 2 & 3)
9. 4(100) Skip-Dash (Yellow) — 10' (3.05m) / 30' (9.14m) / 10' (3.05m) (See Special Note 1)
10. 12(300) Diagonal (Yellow) (See Table A) — 45°
11. 4(100) Double Solid (Yellow) — 11(280) C.-C. — See Table A

SPECIAL NOTES

1. Skip-Dash markings will be centered between both ends of city blocks and shall be placed in alignment transversely across the pavement.
2. The following shall apply to arrows located in one-way left turn lanes:
   A. A minimum of two (2) arrows is required.
   B. The maximum spacing between arrows is 80' (24 m).
   C. Arrows shall be evenly spaced if three (3) or more are required.
3. The following shall apply to arrow pairs located in two-way left turn lanes:
   A. A minimum of two (2) arrow pairs is required.
   B. The maximum spacing between arrow pairs is 200' (61 m).
   C. Arrow pairs shall be evenly spaced if three (3) or more are required.
   D. The spacing between Bi Directional Left Turn Arrows is 33' (10 m).

GENERAL NOTES

1. Refer to State Standard 780001 for additional Pavement Markings including letters & arrows.
2. See Plans for Pavement Markings adjacent to curbed islands and medians, and through lane reductions.
3. Refer to Article 780.13 for letter, number and symbol areas (sq. ft.)
4. Areas are grooved 1" beyond each edge for the following symbols:
   Through Arrow= 14.8 sq. ft.
   Large Left or Right Arrow= 21.9 sq. ft.
   2 Arrow Combination Left (or Right) and Through= 34.9 sq. ft.
   Wrong Way Arrow= 29.5 sq. ft.
   Railroad Crossing Symbol= 69.8 sq. ft.
   (For further information, refer to BDE Special Provision: Grooving for Recessed Pavement Markings)

01-01-97	RENUM. F-8.03, NEW REVISION BOX	T.P.	10-16-06	REVISED TO 2007 SPEC.	
02-07-97	ADD BI DIRECTIONAL DIMENSION	J.A.	2/29/16	ADDED GROOVING AREAS	R.D.
10-97	CORRECT BI DIRECTIONAL DIMENSION	J.A.	07-16-19	SPELLING CORRECTIONS	R.D.
08-02	ADD CROSSWALK DMNS. WITH T.S.	M.A.			

STATE OF ILLINOIS
DEPARTMENT OF TRANSPORTATION

TYPICAL PAVEMENT MARKINGS

NOT TO SCALE

SHT. 1 OF 2
CADD STD. 780001-D4

F.A. RTE.	SECTION	COUNTY	TOTAL SHEETS	SHEET NO.
1388	(Z-2C-15D)BR-1	PEORIA	90	56
		CONTRACT NO. 68862		
FED. ROAD DIST. NO.	ILLINOIS	FED. AID PROJECT		

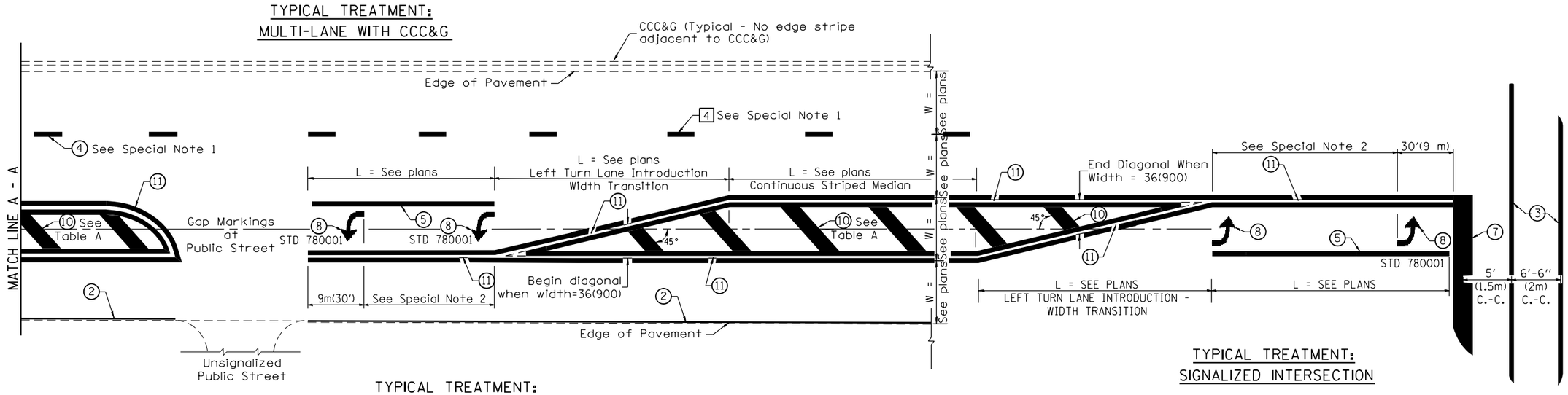

FLUSH PAVED MEDIAN: RESTRICTED LEFT TURN LANE

TABLE A

RECOMMENDED SPACING BETWEEN DIAGONAL LINES

SPEED LIMIT RANGE	CONTINUOUS	INTERSECTION CHANNELIZATION (Includes Width Transitions for Median and Left Turn Lane Introductions)
Less Than 30 mph (50 km/h)	50' (15m)	15' (5m)
30 - 45 mph (50 - 70 km/h)	75' (23m)	20' (6m)
Over 45 mph (70 km/h)	150' (46m)	30' (9m)

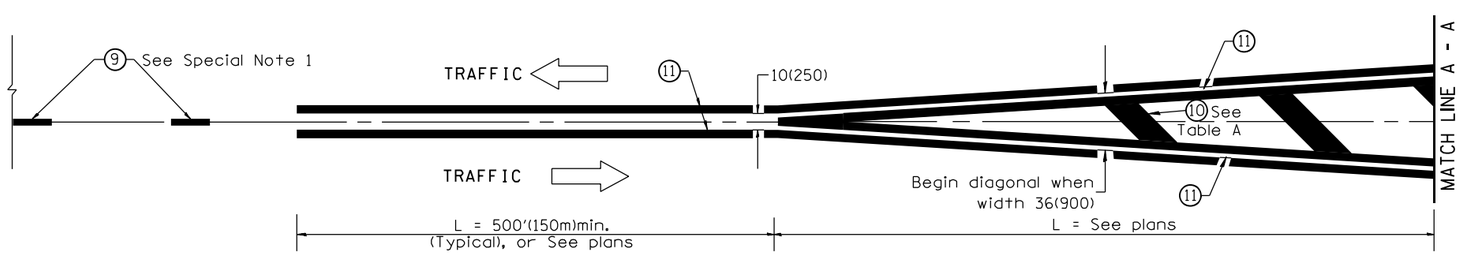

MEDIAN INTRODUCTION - WIDTH TRANSITIONS

All dimensions are in inches (millimeters) unless otherwise noted.

STATE OF ILLINOIS
DEPARTMENT OF TRANSPORTATION

TYPICAL PAVEMENT MARKINGS

NOT TO SCALE

SHT. 2 OF 2
CADD STD. 780001-D4

F.A. RTE.	SECTION	COUNTY	TOTAL SHEETS	SHEET NO.
1388	(Z-2C-15D)BR-1	PEORIA	90	57
		CONTRACT NO. 68862		
FED. ROAD DIST. NO.	ILLINOIS	FED. AID PROJECT		

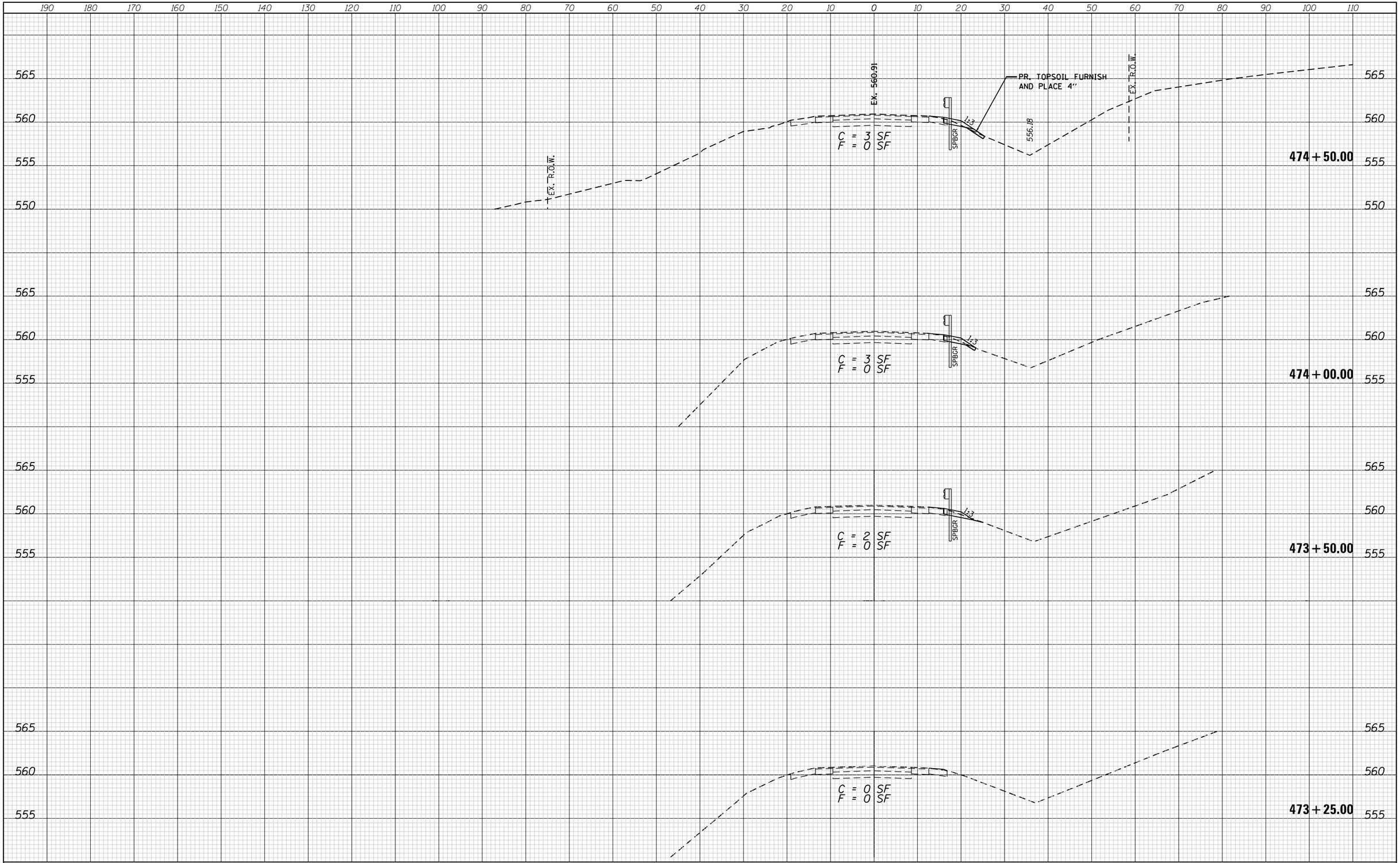

FINAL SURVEY		BY	DATE
NOTE BOOK	SURVEYED		
	PLOTTED		
	TEMPLATE		
	AREAS		
NO.	AREAS CHECKED		

ORIGINAL SURVEY		BY	DATE
NOTE BOOK	SURVEYED		
	PLOTTED		
	TEMPLATE		
	AREAS		
NO.	AREAS CHECKED		

FILE NAME =	USER NAME = efisher	DESIGNED -	REVISED -
P:\2009\090072\IL 8-Kick\4.CADD\4.2-TR\SHEETS\D468862-sht-xssht-rdwy.dgn		DRAWN -	REVISED -
	PLOT SCALE = 20.0000 ' / in.	CHECKED -	REVISED -
Default	PLOT DATE = 6/14/2022	DATE -	REVISED -

STATE OF ILLINOIS
DEPARTMENT OF TRANSPORTATION

ROADWAY CROSS SECTIONS
IL 8 OVER THE WEST FORK OF KICKAPOO CREEK

SCALE: 1" = 10' | SHEET 1 OF 25 SHEETS | STA. 473+25.00 TO STA. 474+50.00

F.A. RTE.	SECTION	COUNTY	TOTAL SHEETS	SHEET NO.
1388	(Z-2C-15D)BR-1	PEORIA	90	58
		CONTRACT NO. 68862		
		ILLINOIS FED. AID PROJECT		

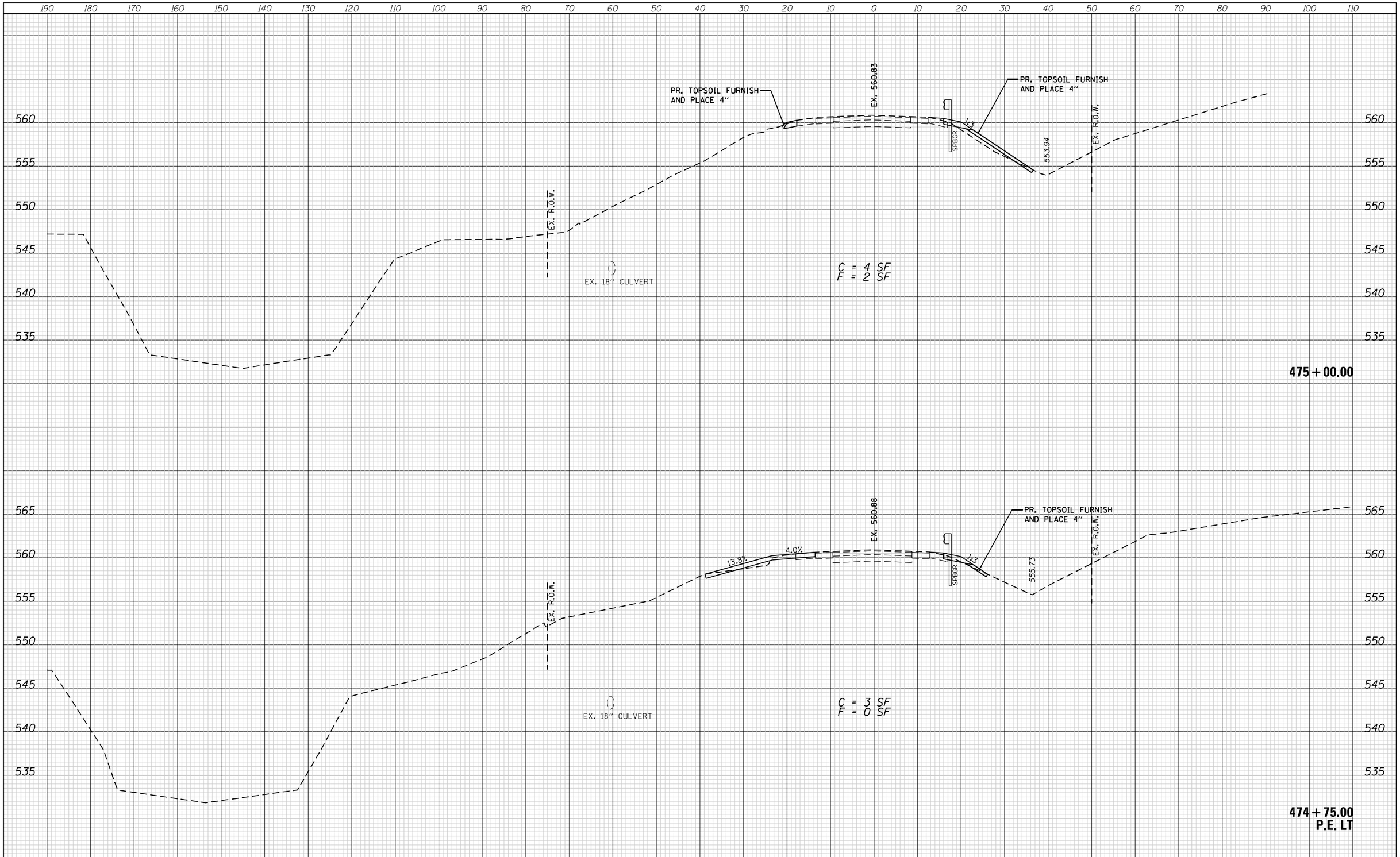

FINAL SURVEY		BY	DATE
NOTE BOOK	SURVEYED		
	PLOTTED		
	TEMPLATE		
	AREAS		
NO.	AREAS CHECKED		

ORIGINAL SURVEY		BY	DATE
NOTE BOOK	SURVEYED		
	PLOTTED		
	TEMPLATE		
	AREAS		
NO.	AREAS CHECKED		

FILE NAME = P:\2009\090072\IL 8-Kick\4. CADD\4.2-TR\SHEETS\D468862-sht-xssht-rdwy.dgn	USER NAME = efisher	DESIGNED -	REVISED -
		DRAWN -	REVISED -
	PLOT SCALE = 20.0000 ' / in.	CHECKED -	REVISED -
Default	PLOT DATE = 6/14/2022	DATE -	REVISED -

STATE OF ILLINOIS
DEPARTMENT OF TRANSPORTATION

ROADWAY CROSS SECTIONS
IL 8 OVER THE WEST FORK OF KICKAPOO CREEK

SCALE: 1" = 10' | SHEET 2 OF 25 SHEETS | STA. 474+75.00 TO STA. 475+00.00

F.A. RTE.	SECTION	COUNTY	TOTAL SHEETS	SHEET NO.
1388	(Z-2C-15D)BR-1	PEORIA	90	59
		CONTRACT NO. 68862		
		ILLINOIS FED. AID PROJECT		

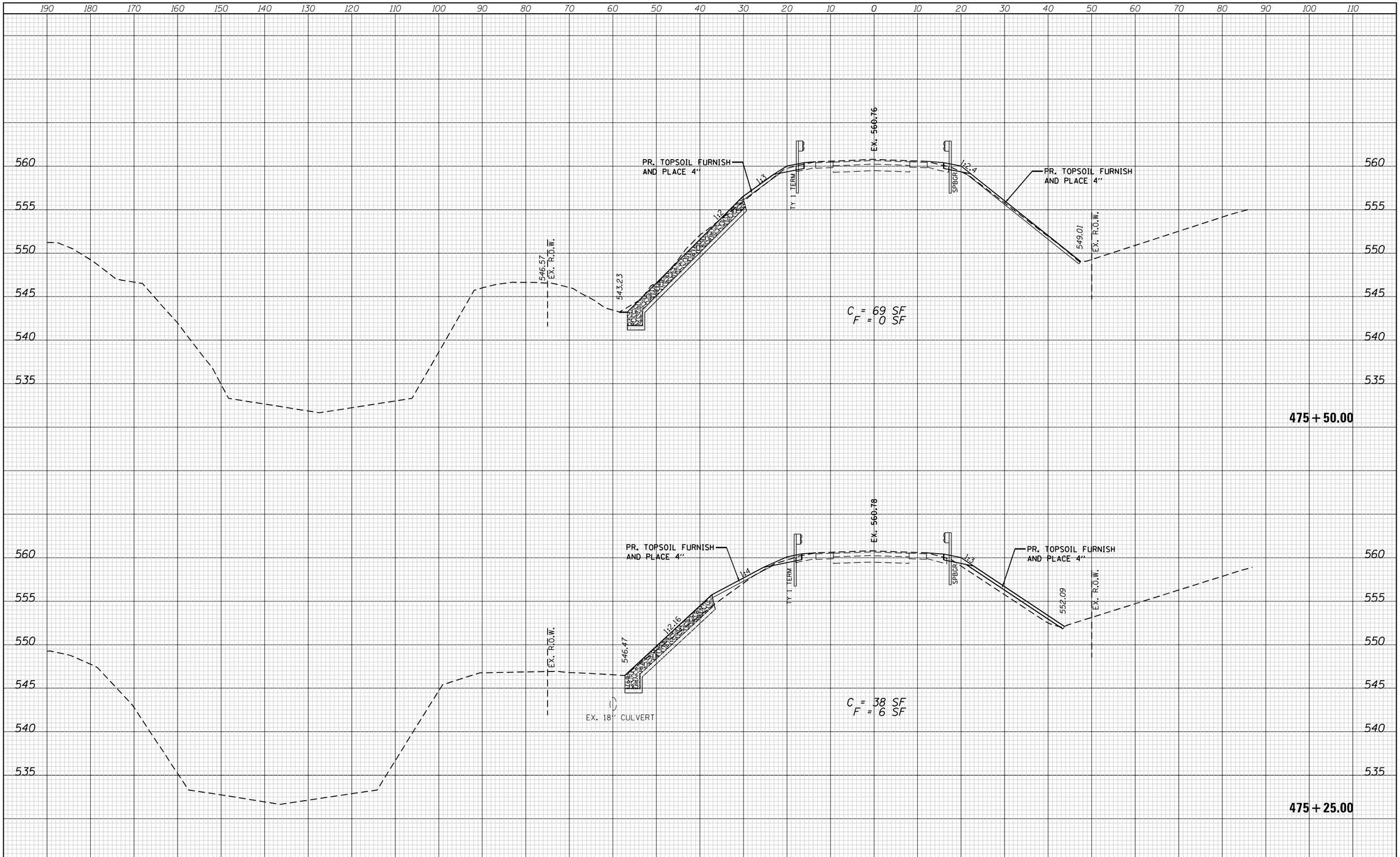

FINAL SURVEY		BY	DATE
NOTE BOOK	SURVEYED		
	PLOTTED		
	TEMPLATE		
	AREAS		
NO.	AREAS CHECKED		

ORIGINAL SURVEY		BY	DATE
NOTE BOOK	SURVEYED		
	PLOTTED		
	TEMPLATE		
	AREAS		
NO.	AREAS CHECKED		

FILE NAME =	USER NAME = efisher	DESIGNED -	REVISED -
P:\2009\090072\IL 8-Kick\4.CADD\4.2-TR\SHEETS\D468862-sht-xssht-rdwy.dgn		DRAWN -	REVISED -
	PLOT SCALE = 20.0000 ' / in.	CHECKED -	REVISED -
Default	PLOT DATE = 6/14/2022	DATE -	REVISED -

STATE OF ILLINOIS
DEPARTMENT OF TRANSPORTATION

ROADWAY CROSS SECTIONS
IL 8 OVER THE WEST FORK OF KICKAPOO CREEK

SCALE: 1" = 10' | SHEET 3 OF 25 SHEETS | STA. 475+25.00 TO STA. 475+50.00

F.A. RTE.	SECTION	COUNTY	TOTAL SHEETS	SHEET NO.
1388	(Z-2C-15D)BR-1	PEORIA	90	60
		CONTRACT NO. 68862		
		ILLINOIS FED. AID PROJECT		

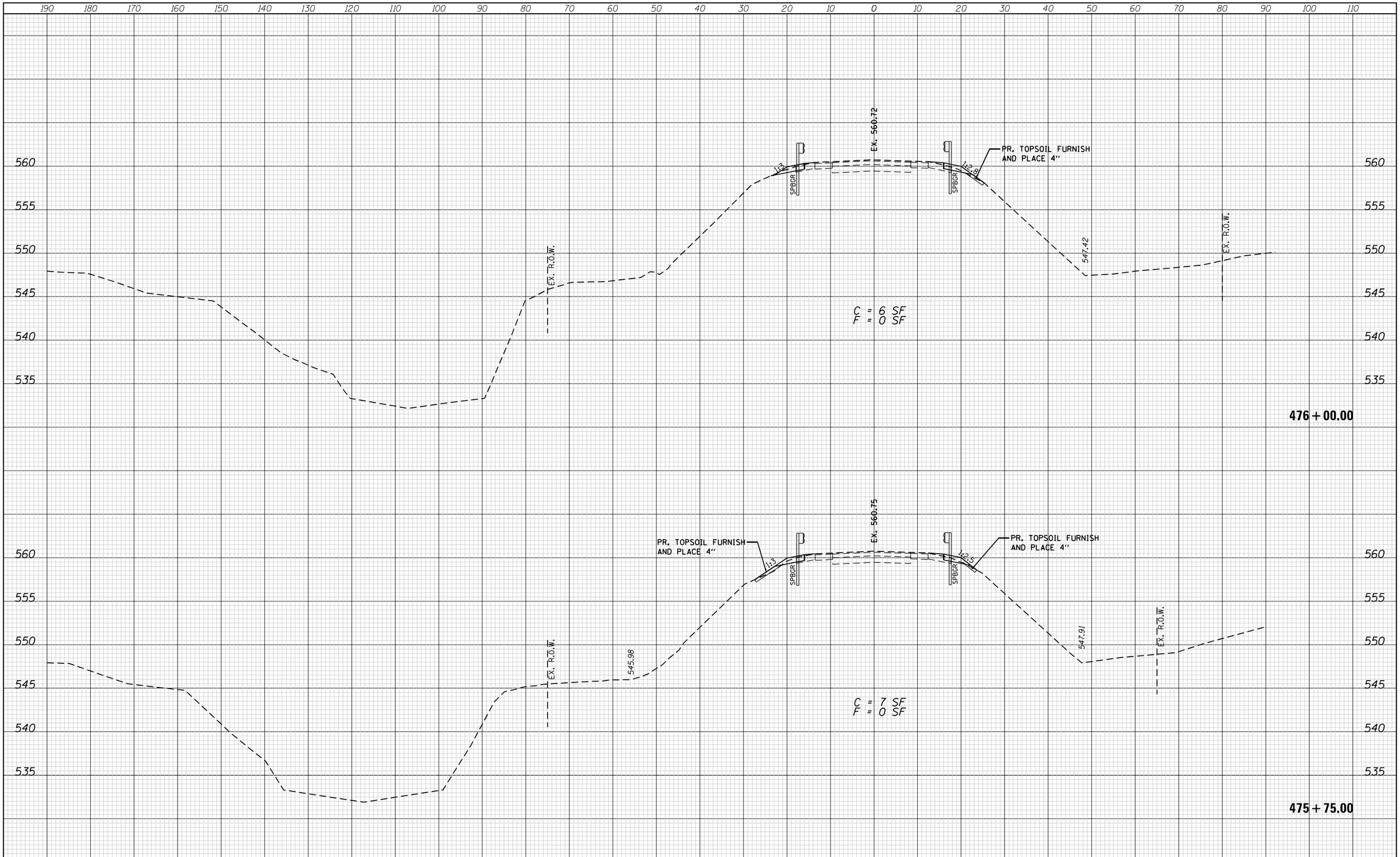

FINAL SURVEY		BY	DATE
NOTE BOOK	SURVEYED		
	PLOTTED		
	TEMPLATE		
	AREAS		
NO.	AREAS CHECKED		

ORIGINAL SURVEY		BY	DATE
NOTE BOOK	SURVEYED		
	PLOTTED		
	TEMPLATE		
	AREAS		
NO.	AREAS CHECKED		

FILE NAME = P:\2009\090072\IL 8-Kick\4. CADD\4.2-TR\SHEETS\D468862-sht-xssht-rdwy.dgn	USER NAME = efisher	DESIGNED -	REVISED -
		DRAWN -	REVISED -
	PLOT SCALE = 20.0000 ' / in.	CHECKED -	REVISED -
Default	PLOT DATE = 6/14/2022	DATE -	REVISED -

STATE OF ILLINOIS
DEPARTMENT OF TRANSPORTATION

ROADWAY CROSS SECTIONS
IL 8 OVER THE WEST FORK OF KICKAPOO CREEK

SCALE: 1" = 10' | SHEET 4 OF 25 SHEETS | STA. 475+75.00 TO STA. 476+00.00

F.A. RTE.	SECTION	COUNTY	TOTAL SHEETS	SHEET NO.
1388	(Z-2C-15D)BR-1	PEORIA	90	61
		CONTRACT NO. 68862		
		ILLINOIS FED. AID PROJECT		

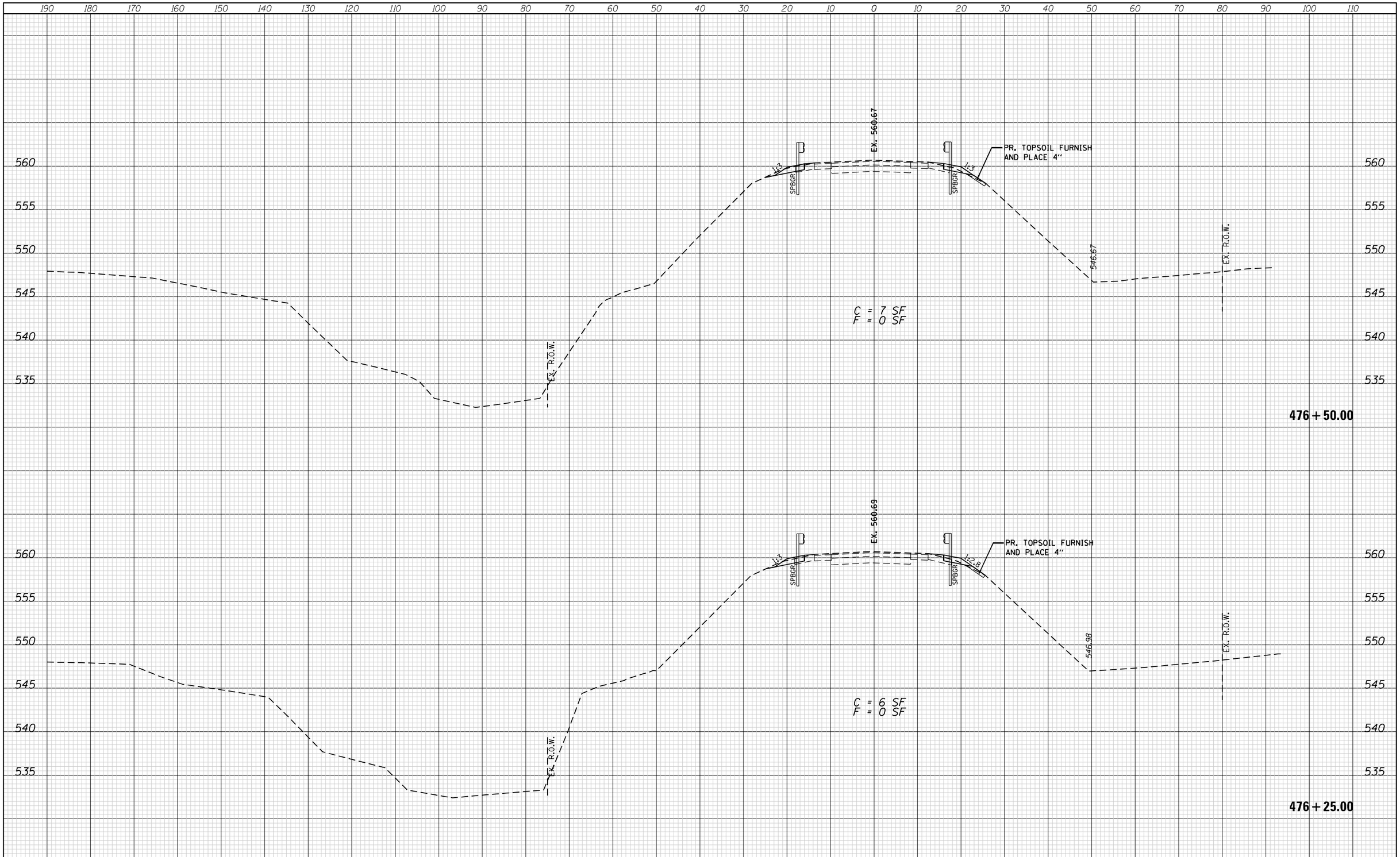

FINAL SURVEY		BY	DATE
NOTE BOOK	SURVEYED		
	PLOTTED		
	TEMPLATE		
	AREAS		
NO.	AREAS CHECKED		

ORIGINAL SURVEY		BY	DATE
NOTE BOOK	SURVEYED		
	PLOTTED		
	TEMPLATE		
	AREAS		
NO.	AREAS CHECKED		

FILE NAME = P:\2009\090072\IL 8-Kick\4. CADD\4.2-TR\SHEETS\D468862-sht-xssht-rdwy.dgn	USER NAME = efisher	DESIGNED -	REVISED -
		DRAWN -	REVISED -
	PLOT SCALE = 20.0000 ' / in.	CHECKED -	REVISED -
Default	PLOT DATE = 6/14/2022	DATE -	REVISED -

STATE OF ILLINOIS
DEPARTMENT OF TRANSPORTATION

ROADWAY CROSS SECTIONS
IL 8 OVER THE WEST FORK OF KICKAPOO CREEK

SCALE: 1" = 10' | SHEET 5 OF 25 SHEETS | STA. 476+25.00 TO STA. 476+50.00

F.A. RTE.	SECTION	COUNTY	TOTAL SHEETS	SHEET NO.
1388	(Z-2C-15D)BR-1	PEORIA	90	62
		CONTRACT NO. 68862		

ILLINOIS FED. AID PROJECT

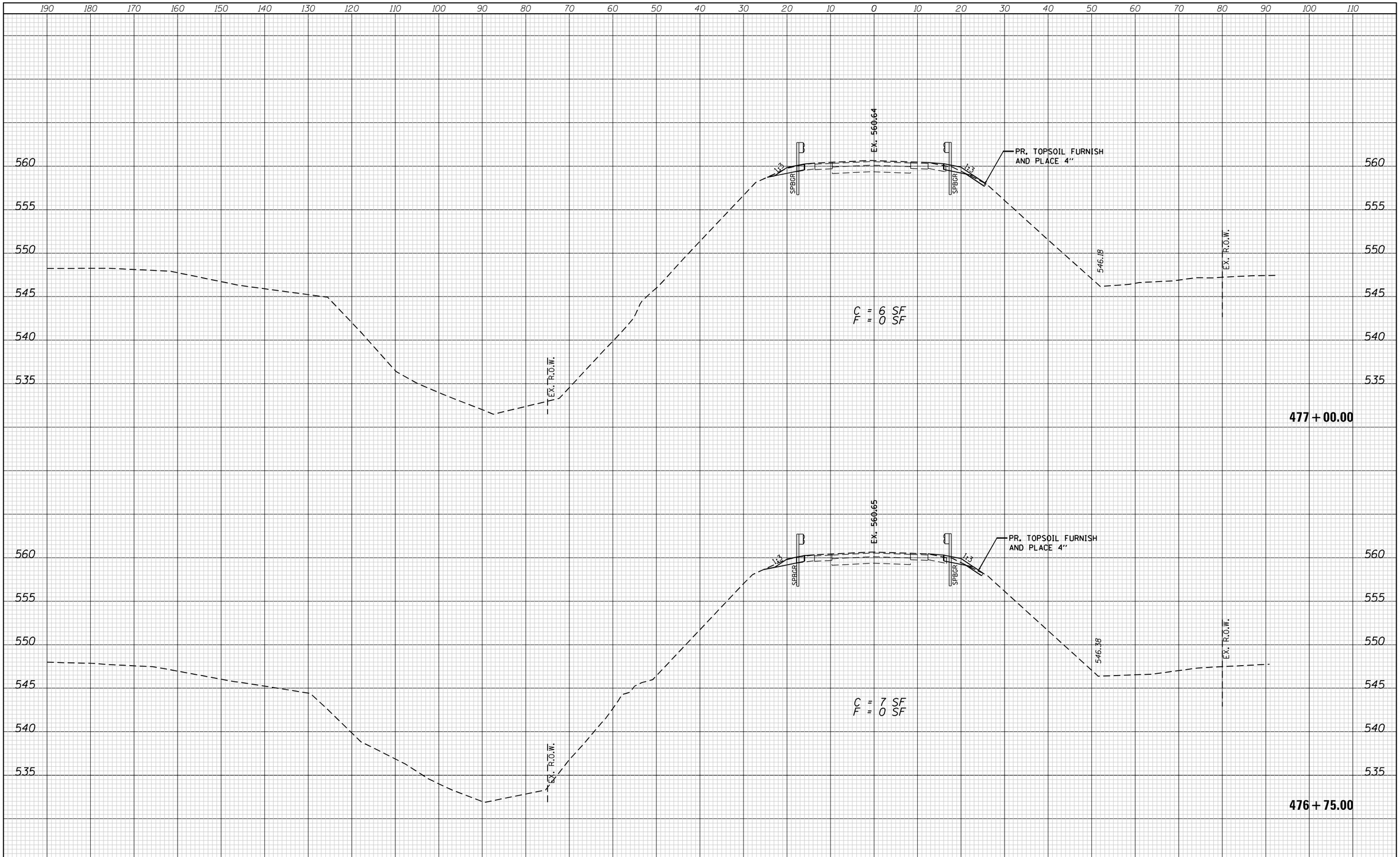

FINAL SURVEY			BY	DATE
NOTE BOOK	SURVEYED			
	PLOTTED			
	TEMPLATE			
	AREAS			
NO.	AREAS CHECKED			

ORIGINAL SURVEY			BY	DATE
NOTE BOOK	SURVEYED			
	PLOTTED			
	TEMPLATE			
	AREAS			
NO.	AREAS CHECKED			

FILE NAME = P:\2009\090072\IL 8-Kick\4.CADD\4.2-TR\SHEETS\D468862-sht-xssht-rdwy.dgn	USER NAME = efisher	DESIGNED -	REVISED -
		DRAWN -	REVISED -
	PLOT SCALE = 20.0000 ' / in.	CHECKED -	REVISED -
Default	PLOT DATE = 6/14/2022	DATE -	REVISED -

STATE OF ILLINOIS
DEPARTMENT OF TRANSPORTATION

ROADWAY CROSS SECTIONS
IL 8 OVER THE WEST FORK OF KICKAPOO CREEK

SCALE: 1" = 10' | SHEET 6 OF 25 SHEETS | STA. 476+75.00 TO STA. 477+00.00

F.A. RTE.	SECTION	COUNTY	TOTAL SHEETS	SHEET NO.
1388	(Z-2C-15D)BR-1	PEORIA	90	63
		CONTRACT NO. 68862		
		ILLINOIS FED. AID PROJECT		

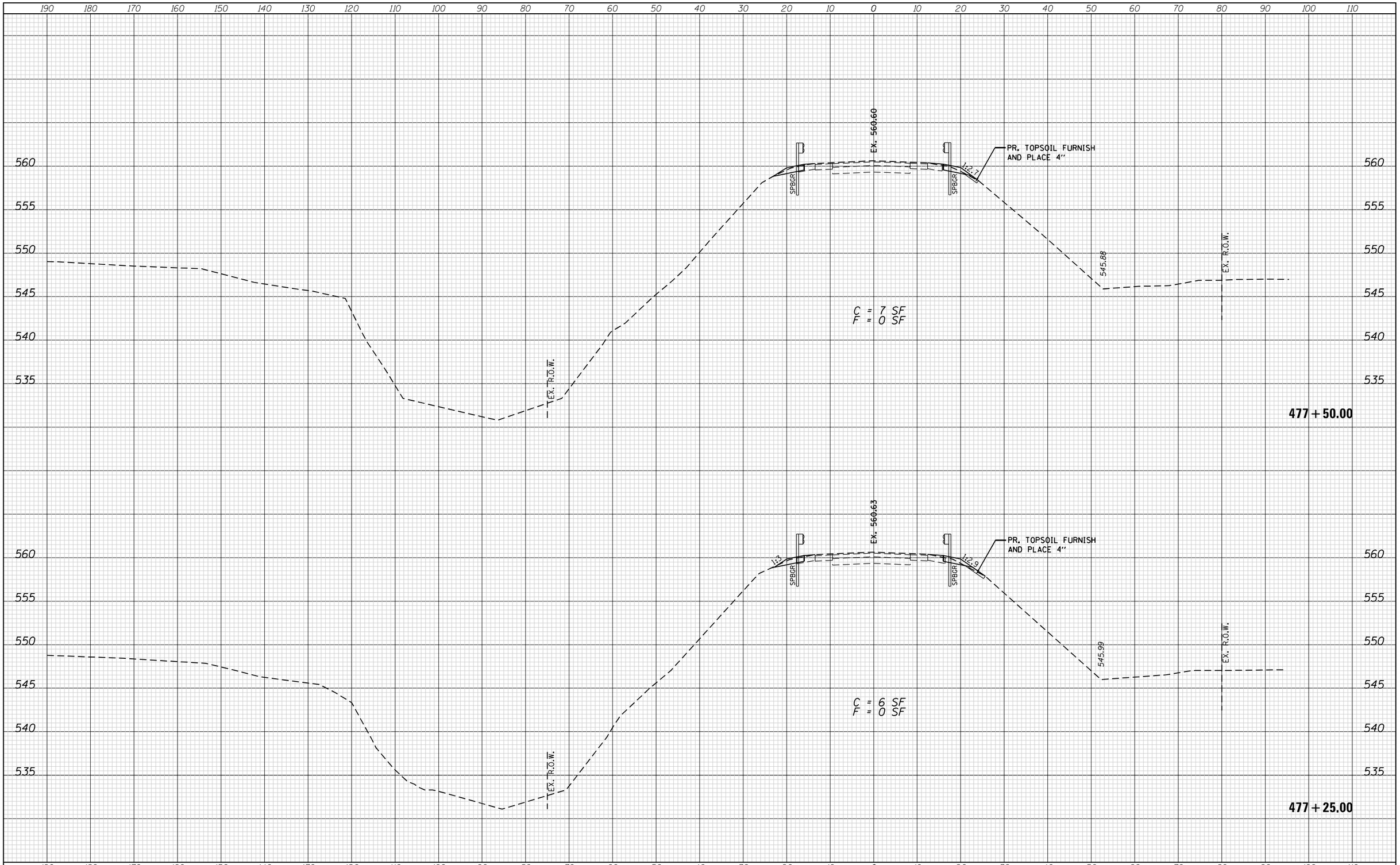

FINAL SURVEY		BY	DATE
	SURVEYED		
	PLOTTED		
	TEMPLATE		
NOTE BOOK	AREAS		
	AREAS CHECKED		
NO.			

ORIGINAL SURVEY		BY	DATE
	SURVEYED		
	PLOTTED		
	TEMPLATE		
NOTE BOOK	AREAS		
	AREAS CHECKED		
NO.			

FILE NAME = P:\2009\090072\IL 8-Kick\4. CADD\4.2-TR\SHEETS\D468862-sht-xssht-rdwy.dgn	USER NAME = efisher	DESIGNED -	REVISED -
		DRAWN -	REVISED -
	PLOT SCALE = 20.0000 ' / in.	CHECKED -	REVISED -
Default	PLOT DATE = 6/14/2022	DATE -	REVISED -

STATE OF ILLINOIS
DEPARTMENT OF TRANSPORTATION

ROADWAY CROSS SECTIONS
IL 8 OVER THE WEST FORK OF KICKAPOO CREEK

SCALE: 1" = 10' | SHEET 7 OF 25 SHEETS | STA. 477+25.00 TO STA. 477+50.00

F.A. RTE.	SECTION	COUNTY	TOTAL SHEETS	SHEET NO.
1388	(Z-2C-15D)BR-1	PEORIA	90	64
		CONTRACT NO. 68862		

ILLINOIS FED. AID PROJECT

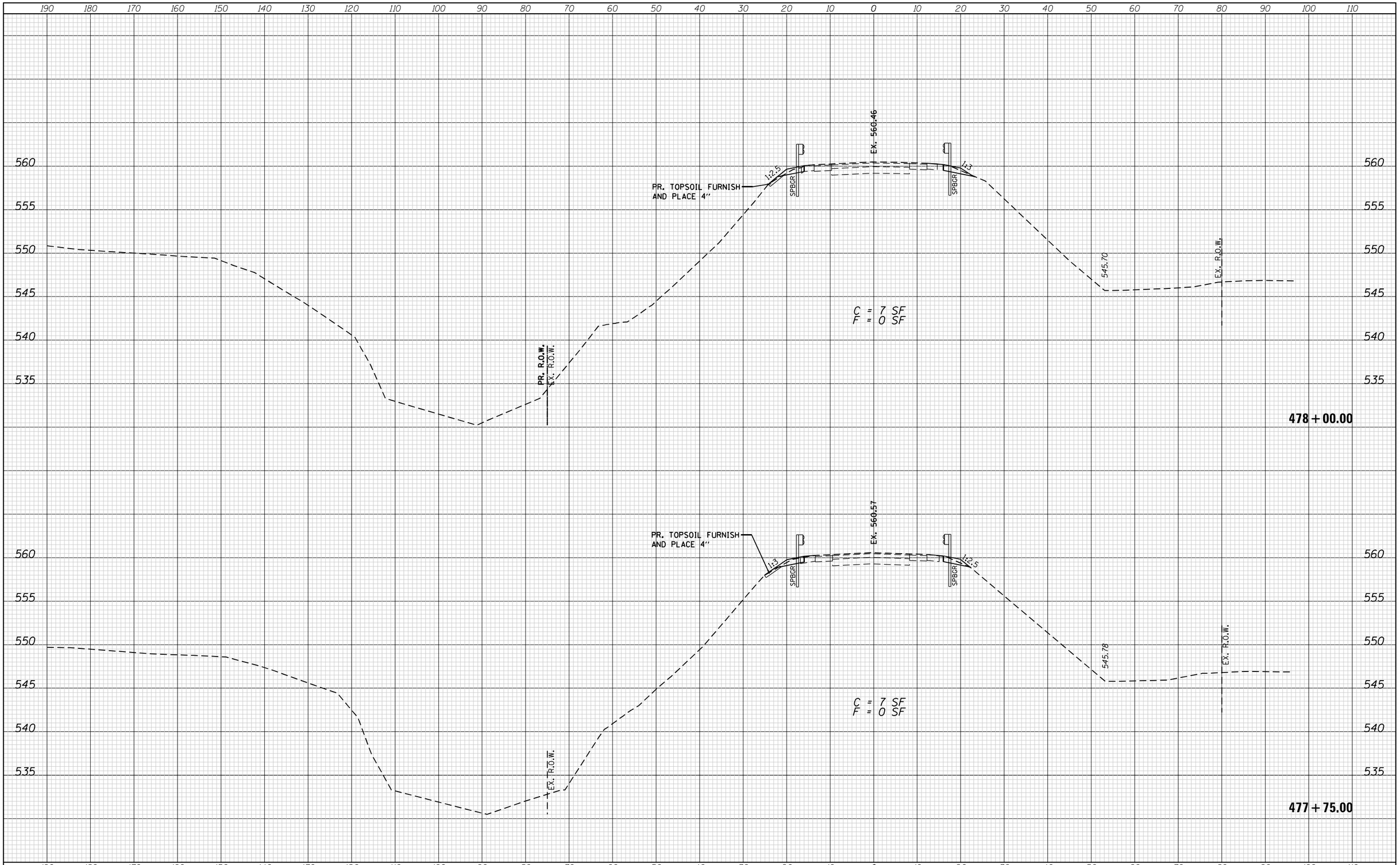

FINAL SURVEY		BY	DATE
NOTE BOOK	SURVEYED		
	PLOTTED		
	TEMPLATE		
	AREAS		
NO.	AREAS CHECKED		

ORIGINAL SURVEY		BY	DATE
NOTE BOOK	SURVEYED		
	PLOTTED		
	TEMPLATE		
	AREAS		
NO.	AREAS CHECKED		

FILE NAME = P:\2009\090072\IL 8-Kick\4. CADD\4.2-TR\SHEETS\D468862-sht-xssht-rdwy.dgn	USER NAME = efisher	DESIGNED -	REVISED -
		DRAWN -	REVISED -
	PLOT SCALE = 20.0000 ' / in.	CHECKED -	REVISED -
Default	PLOT DATE = 6/14/2022	DATE -	REVISED -

STATE OF ILLINOIS
DEPARTMENT OF TRANSPORTATION

ROADWAY CROSS SECTIONS
IL 8 OVER THE WEST FORK OF KICKAPOO CREEK

SCALE: 1" = 10' | SHEET 8 OF 25 SHEETS | STA. 477+75.00 TO STA. 478+00.00

F.A. RTE.	SECTION	COUNTY	TOTAL SHEETS	SHEET NO.
1388	(Z-2C-15D)BR-1	PEORIA	90	65
		CONTRACT NO. 68862		
		ILLINOIS FED. AID PROJECT		

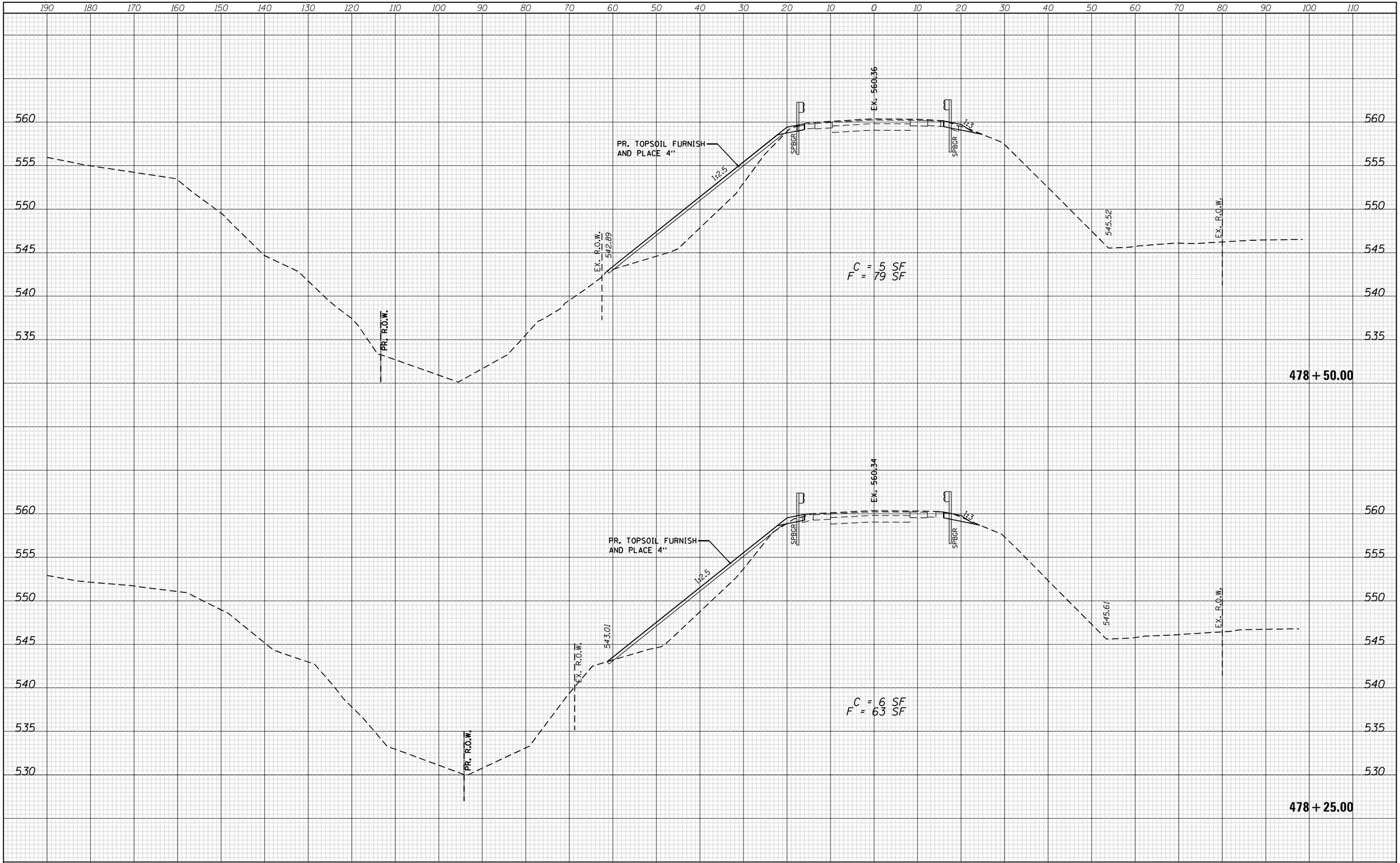

FINAL SURVEY	BY	DATE
SURVEYED		
PLOTTED		
TEMPLATE		
AREAS		
AREAS CHECKED		
NOTE BOOK NO.		

ORIGINAL SURVEY	BY	DATE
SURVEYED		
PLOTTED		
TEMPLATE		
AREAS		
AREAS CHECKED		
NOTE BOOK NO.		

FILE NAME =	USER NAME = efisher	DESIGNED -	REVISED -
P:\2009\090072\IL 8-Kick\4.CADD\4.2-TR\SHEETS\D468862-sht-xssht-rdwy.dgn		DRAWN -	REVISED -
	PLOT SCALE = 20.0000 ' / in.	CHECKED -	REVISED -
Default	PLOT DATE = 6/14/2022	DATE -	REVISED -

STATE OF ILLINOIS
DEPARTMENT OF TRANSPORTATION

ROADWAY CROSS SECTIONS
IL 8 OVER THE WEST FORK OF KICKAPOO CREEK

SCALE: 1" = 10' | SHEET 9 OF 25 SHEETS | STA. 478+25.00 TO STA. 478+50.00

F.A. RTE.	SECTION	COUNTY	TOTAL SHEETS	SHEET NO.
1388	(Z-2C-15D)BR-1	PEORIA	90	66
		CONTRACT NO. 68862		
		ILLINOIS FED. AID PROJECT		

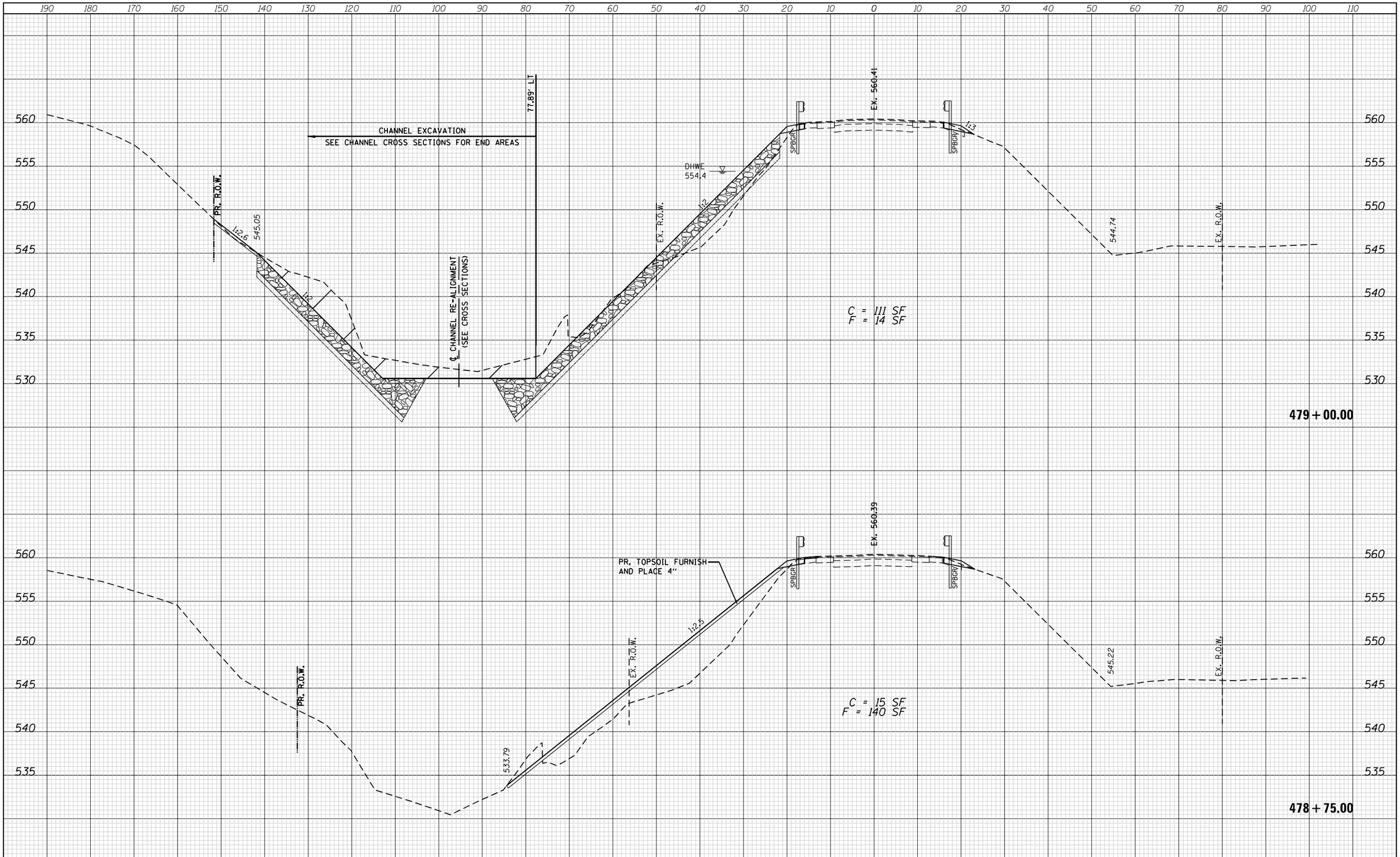

FINAL SURVEY		BY	DATE
NOTE BOOK	SURVEYED		
	PLOTTED		
	TEMPLATE		
	AREAS		
NO.	AREAS CHECKED		

ORIGINAL SURVEY		BY	DATE
NOTE BOOK	SURVEYED		
	PLOTTED		
	TEMPLATE		
	AREAS		
NO.	AREAS CHECKED		

FILE NAME = P:\2009\090072\IL 8-Kick\4.CADD\4.2-TR\SHEETS\D468862-sht-xssht-rdwy.dgn	USER NAME = efisher	DESIGNED -	REVISED -
		DRAWN -	REVISED -
	PLOT SCALE = 20.0000 ' / in.	CHECKED -	REVISED -
Default	PLOT DATE = 6/14/2022	DATE -	REVISED -

STATE OF ILLINOIS
DEPARTMENT OF TRANSPORTATION

ROADWAY CROSS SECTIONS
IL 8 OVER THE WEST FORK OF KICKAPOO CREEK

SCALE: 1" = 10' | SHEET 10 OF 25 SHEETS | STA. 478+75.00 TO STA. 479+00.00

F.A. RTE.	SECTION	COUNTY	TOTAL SHEETS	SHEET NO.
1388	(Z-2C-15D)BR-1	PEORIA	90	67
		CONTRACT NO. 68862		
		ILLINOIS FED. AID PROJECT		

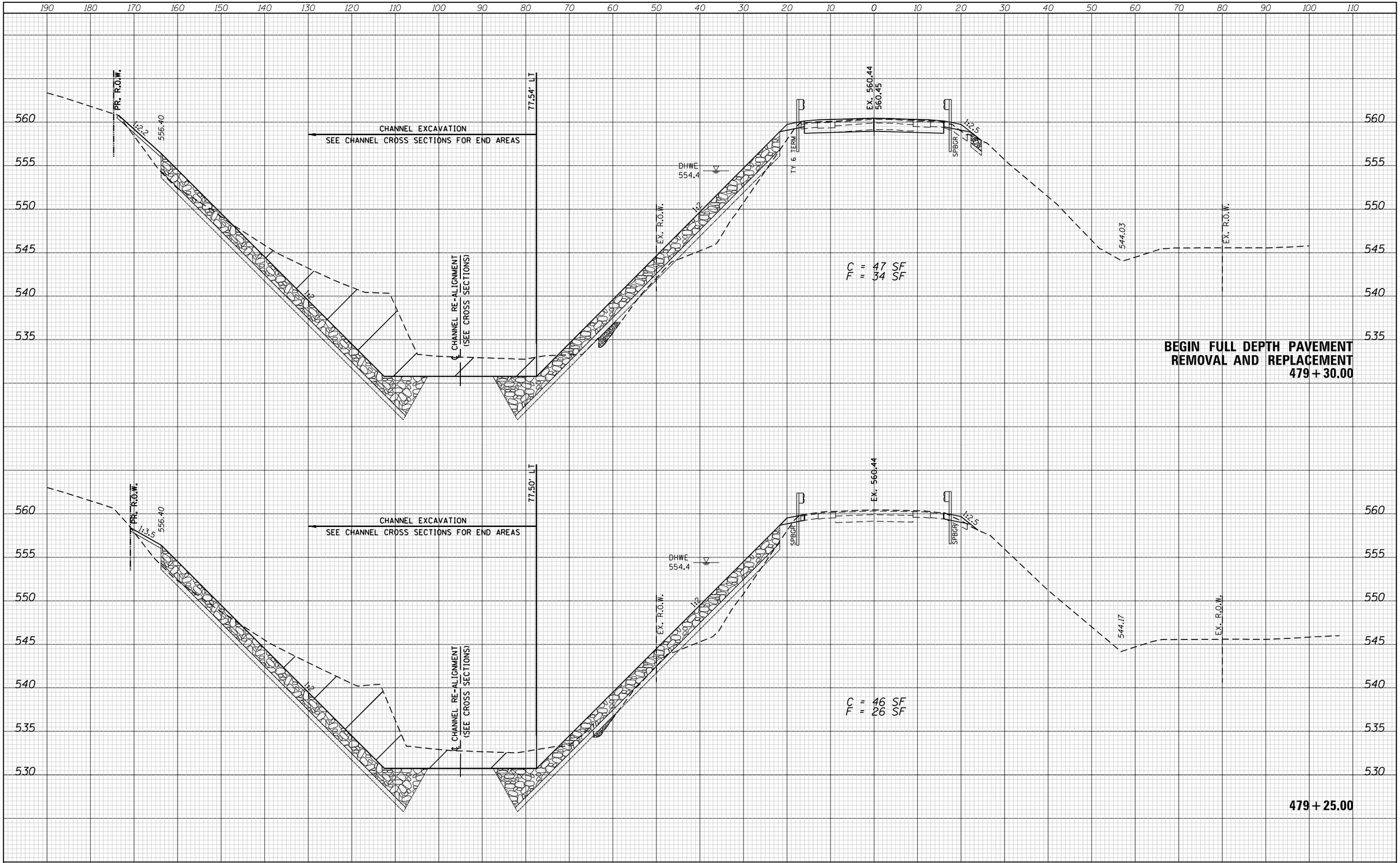

FINAL SURVEY		BY	DATE
NOTE BOOK	SURVEYED		
	PLOTTED		
	TEMPLATE		
	AREAS		
NO.	AREAS CHECKED		

ORIGINAL SURVEY		BY	DATE
NOTE BOOK	SURVEYED		
	PLOTTED		
	TEMPLATE		
	AREAS		
NO.	AREAS CHECKED		

FILE NAME =	USER NAME = efisher	DESIGNED -	REVISED -
P:\2009\090072\IL 8-Kick\4.CADD\4.2-TR\SHEETS\D468862-sht-xssht-rdwy.dgn		DRAWN -	REVISED -
	PLOT SCALE = 20.0000 ' / in.	CHECKED -	REVISED -
Default	PLOT DATE = 6/14/2022	DATE -	REVISED -

STATE OF ILLINOIS
DEPARTMENT OF TRANSPORTATION

ROADWAY CROSS SECTIONS
IL 8 OVER THE WEST FORK OF KICKAPOO CREEK

SCALE: 1" = 10' | SHEET 11 OF 25 SHEETS | STA. 479+25.00 TO STA. 479+30.00

F.A. RTE.	SECTION	COUNTY	TOTAL SHEETS	SHEET NO.
1388	(Z-2C-15D)BR-1	PEORIA	90	68
		CONTRACT NO. 68862		
		ILLINOIS FED. AID PROJECT		

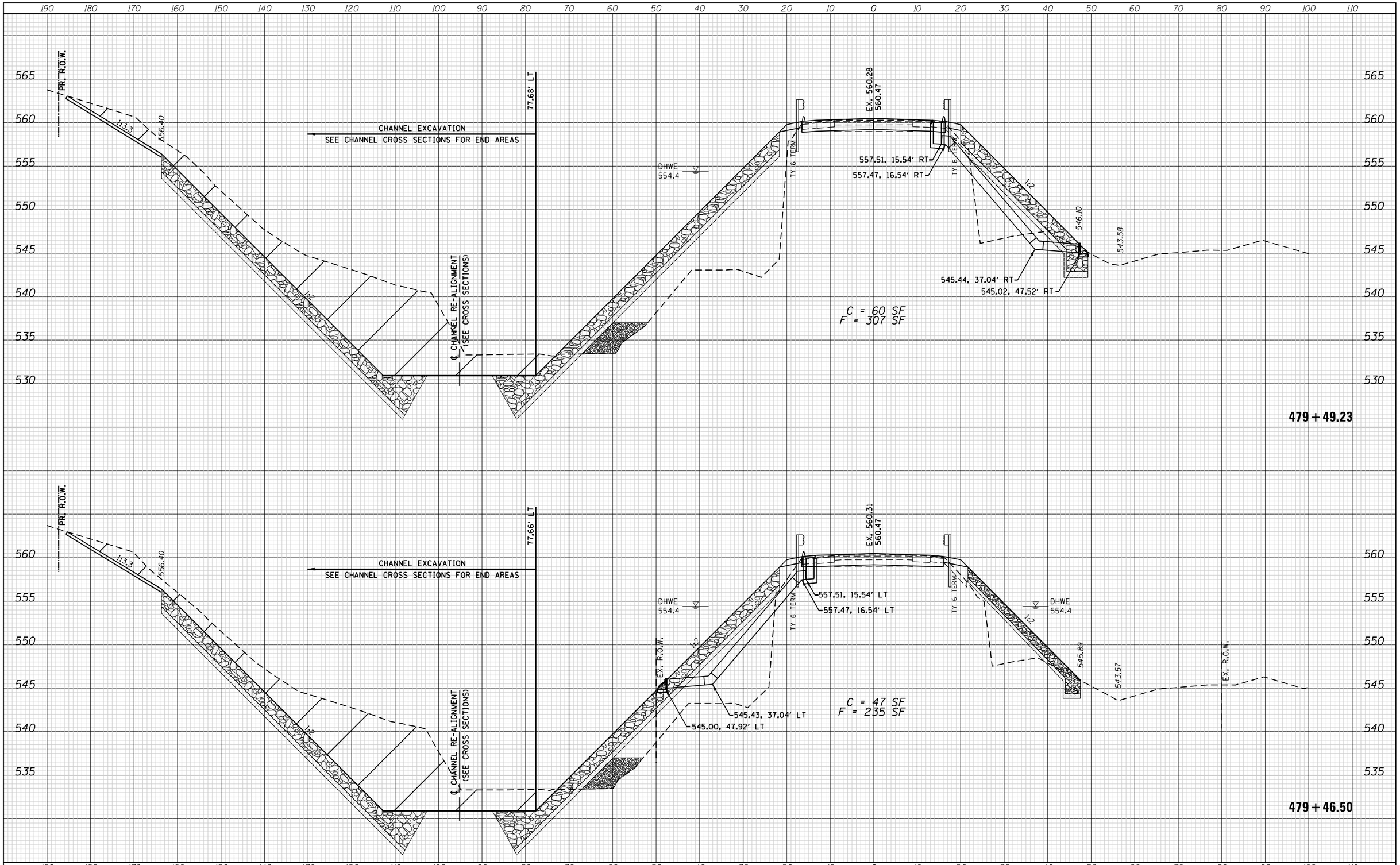

FINAL SURVEY		BY	DATE
	SURVEYED		
	PLOTTED		
	TEMPLATE		
NOTE BOOK	AREAS		
	AREAS CHECKED		
NO.			

ORIGINAL SURVEY		BY	DATE
	SURVEYED		
	PLOTTED		
	TEMPLATE		
NOTE BOOK	AREAS		
	AREAS CHECKED		
NO.			

FILE NAME = P:\2009\090072\IL 8-Kick\4.CADD\4.2-TR\SHEETS\D468862-sht-xssht-rdwy.dgn	USER NAME = efisher	DESIGNED -	REVISED -
		DRAWN -	REVISED -
	PLOT SCALE = 20.0000 ' / in.	CHECKED -	REVISED -
Default	PLOT DATE = 6/14/2022	DATE -	REVISED -

STATE OF ILLINOIS
DEPARTMENT OF TRANSPORTATION

ROADWAY CROSS SECTIONS
IL 8 OVER THE WEST FORK OF KICKAPOO CREEK

SCALE: 1" = 10' | SHEET 12 OF 25 SHEETS | STA. 479+46.50 TO STA. 479+49.23

F.A. RTE.	SECTION	COUNTY	TOTAL SHEETS	SHEET NO.
1388	(Z-2C-15D)BR-1	PEORIA	90	69
		CONTRACT NO. 68862		
	ILLINOIS FED. AID PROJECT			

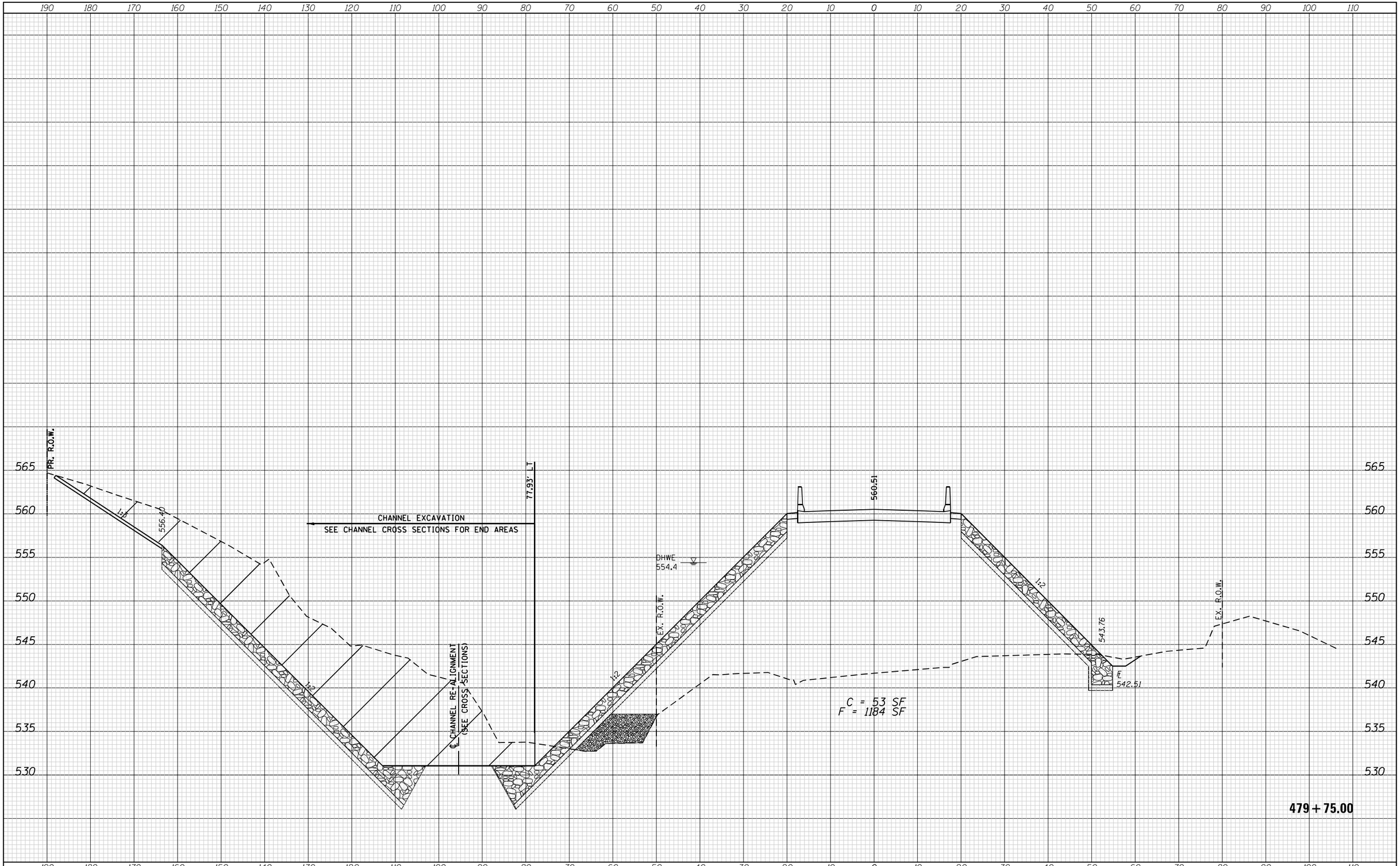

FINAL SURVEY		BY	DATE
NOTE BOOK NO.	SURVEYED		
	PLOTTED		
	TEMPLATE		
	AREAS		
	AREAS CHECKED		

ORIGINAL SURVEY		BY	DATE
NOTE BOOK NO.	SURVEYED		
	PLOTTED		
	TEMPLATE		
	AREAS		
	AREAS CHECKED		

FILE NAME =	USER NAME = efisher	DESIGNED -	REVISED -
P:\2009\090072\IL 8-Kick\4.CADD\4.2-TR\SHEETS\D468862-sht-xssht-rdwy.dgn		DRAWN -	REVISED -
	PLOT SCALE = 20.0000 ' / in.	CHECKED -	REVISED -
Default	PLOT DATE = 6/14/2022	DATE -	REVISED -

STATE OF ILLINOIS
DEPARTMENT OF TRANSPORTATION

ROADWAY CROSS SECTIONS
IL 8 OVER THE WEST FORK OF KICKAPOO CREEK

SCALE: 1" = 10' | SHEET 13 OF 25 SHEETS | STA. 479+75.00 TO STA. 479+75.00

F.A. RTE.	SECTION	COUNTY	TOTAL SHEETS	SHEET NO.
1388	(Z-2C-15D)BR-1	PEORIA	90	70
		CONTRACT NO. 68862		
		ILLINOIS FED. AID PROJECT		

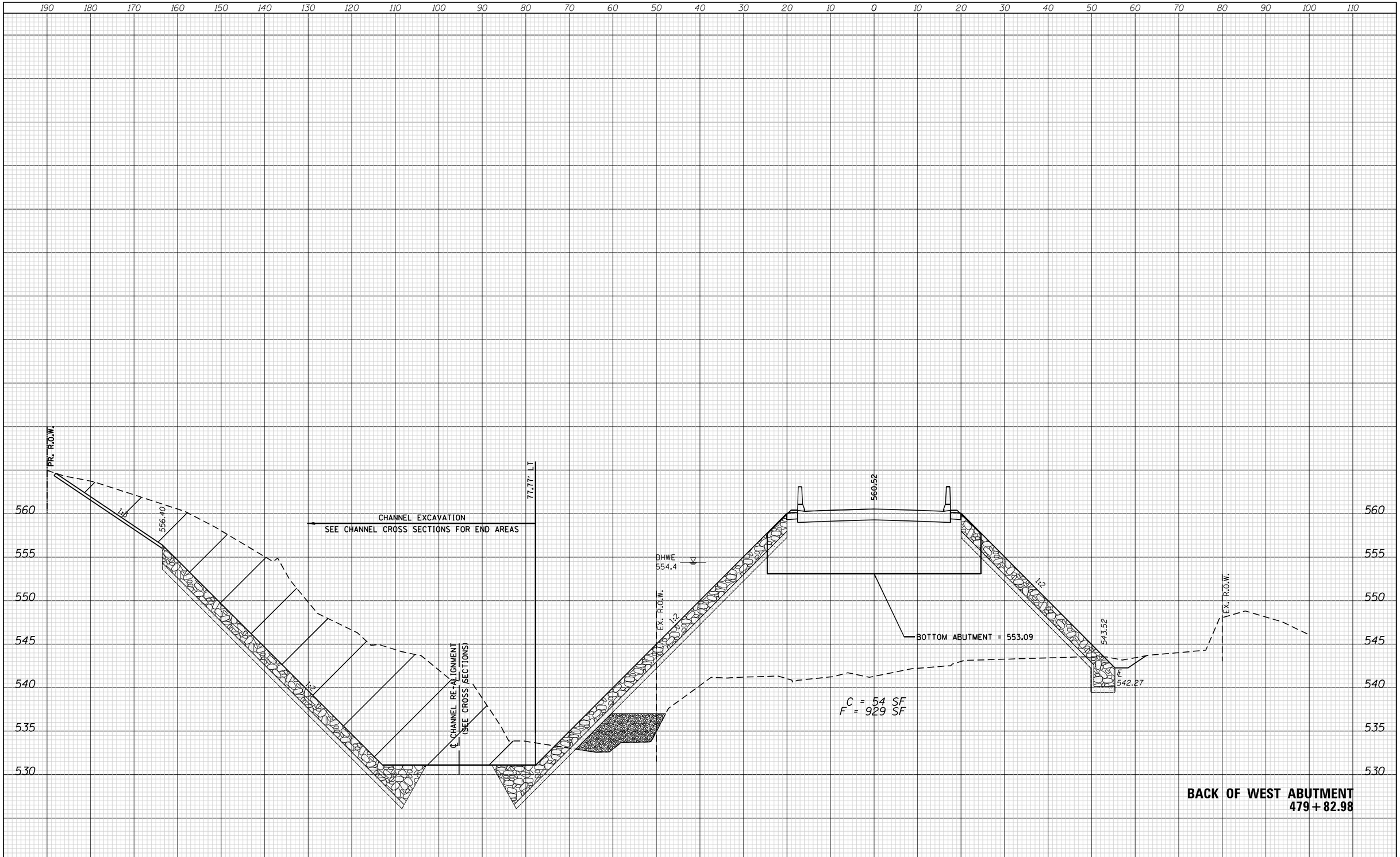

FINAL SURVEY		BY	DATE
NOTE BOOK	SURVEYED		
	PLOTTED		
	TEMPLATE		
	AREAS		
	AREAS CHECKED		
NO.			

ORIGINAL SURVEY		BY	DATE
NOTE BOOK	SURVEYED		
	PLOTTED		
	TEMPLATE		
	AREAS		
	AREAS CHECKED		
NO.			

FILE NAME = P:\2009\090072\IL 8-Kick\4. CADD\4.2-TR\SHEETS\D468862-sht-xssht-rdwy.dgn	USER NAME = efisher	DESIGNED -	REVISED -
	PLOT SCALE = 20.0000 ' / in.	DRAWN -	REVISED -
		CHECKED -	REVISED -
Default	PLOT DATE = 6/14/2022	DATE -	REVISED -

STATE OF ILLINOIS
DEPARTMENT OF TRANSPORTATION

ROADWAY CROSS SECTIONS
IL 8 OVER THE WEST FORK OF KICKAPOO CREEK

SCALE: 1" = 10' | SHEET 14 OF 25 SHEETS | STA. 479+82.98 TO STA. 479+82.98

F.A. RTE.	SECTION	COUNTY	TOTAL SHEETS	SHEET NO.
1388	(Z-2C-15D)BR-1	PEORIA	90	71
		CONTRACT NO. 68862		
		ILLINOIS FED. AID PROJECT		

FINAL SURVEY		BY	DATE
	SURVEYED		
	PLOTTED		
NOTE BOOK	TEMPLATE		
	AREAS		
NO.	AREAS CHECKED		

ORIGINAL SURVEY		BY	DATE
	SURVEYED		
	PLOTTED		
NOTE BOOK	TEMPLATE		
	AREAS		
NO.	AREAS CHECKED		

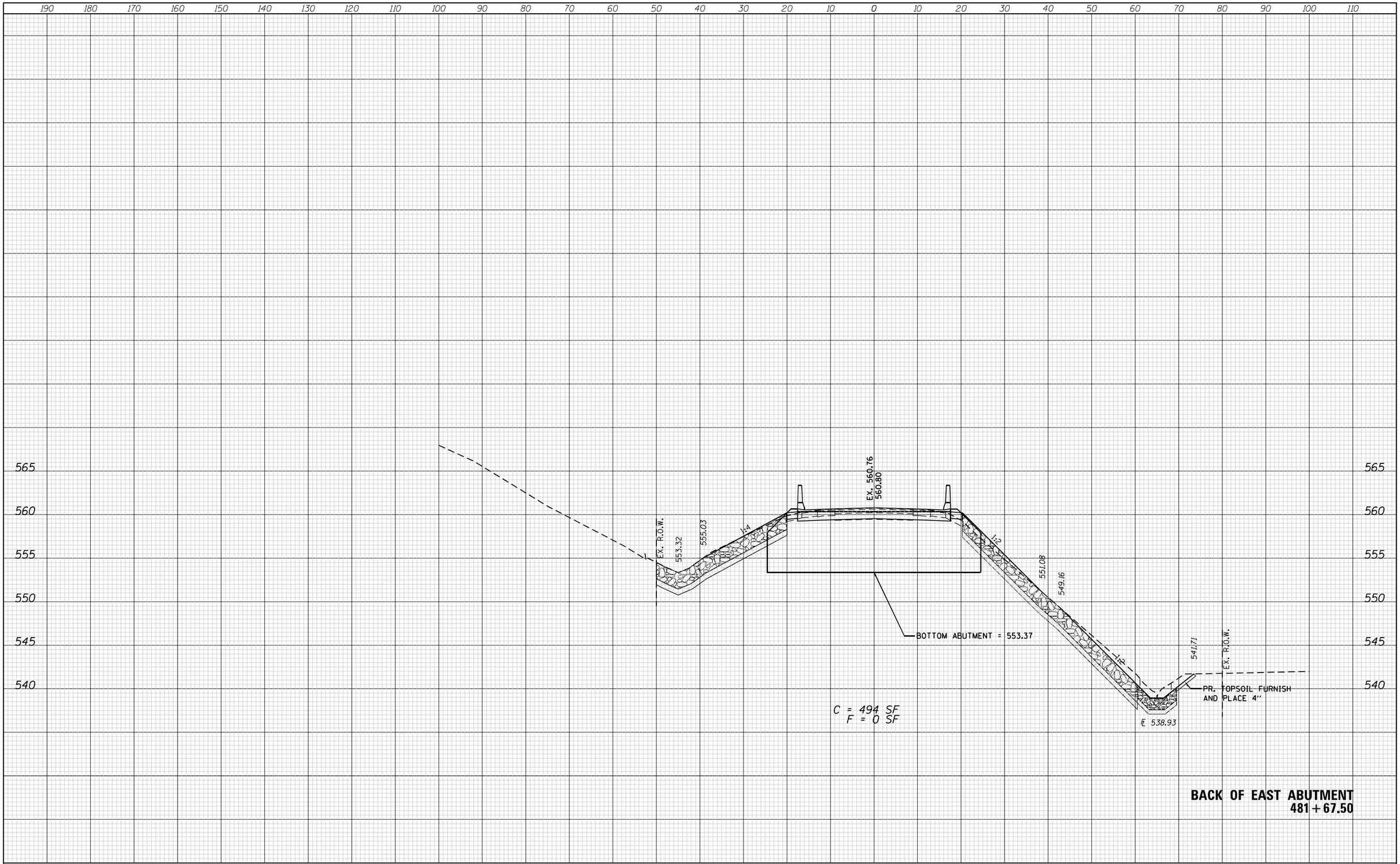

FILE NAME =	USER NAME = efisher	DESIGNED -	REVISED -
P:\2009\090072\IL 8-Kick\4.CADD\4.2-TR\SHEETS\D468862-sht-xssht-rdwy.dgn		DRAWN -	REVISED -
	PLOT SCALE = 20.0000 ' / in.	CHECKED -	REVISED -
Default	PLOT DATE = 6/14/2022	DATE -	REVISED -

STATE OF ILLINOIS
DEPARTMENT OF TRANSPORTATION

ROADWAY CROSS SECTIONS
IL 8 OVER THE WEST FORK OF KICKAPOO CREEK

SCALE: 1" = 10' | SHEET 15 OF 25 SHEETS | STA. 481+67.50 TO STA. 481+67.50

F.A. RTE.	SECTION	COUNTY	TOTAL SHEETS	SHEET NO.
1388	(Z-2C-15D)BR-1	PEORIA	90	72
		CONTRACT NO. 68862		
		ILLINOIS FED. AID PROJECT		

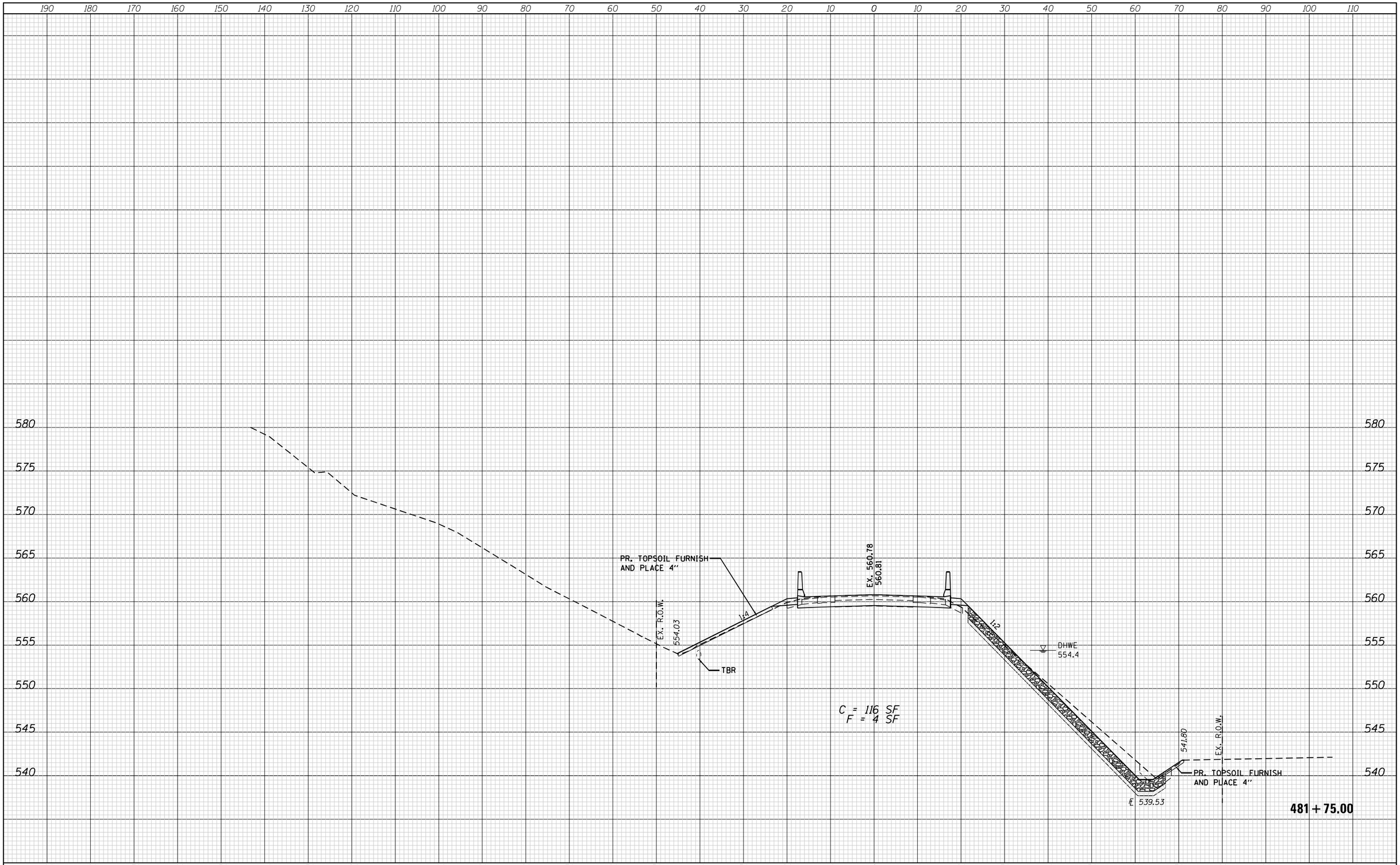

FINAL SURVEY	BY	DATE
SURVEYED		
PLOTTED		
TEMPLATE		
AREAS		
AREAS CHECKED		
NOTE BOOK NO.		

ORIGINAL SURVEY	BY	DATE
SURVEYED		
PLOTTED		
TEMPLATE		
AREAS		
AREAS CHECKED		
NOTE BOOK NO.		

FILE NAME = P:\2009\090072\IL 8-Kick\4.CADD\4.2-TR\SHEETS\D468862-sht-xsshtrrdwy.dgn	USER NAME = efisher	DESIGNED -	REVISED -
	PLOT SCALE = 20.0000 ' / in.	DRAWN -	REVISED -
	PLOT DATE = 6/14/2022	CHECKED -	REVISED -
Default		DATE -	REVISED -

STATE OF ILLINOIS
DEPARTMENT OF TRANSPORTATION

ROADWAY CROSS SECTIONS
IL 8 OVER THE WEST FORK OF KICKAPOO CREEK

SCALE: 1" = 10' | SHEET 16 OF 25 SHEETS | STA. 481+75.00 TO STA. 481+75.00

F.A. RTE.	SECTION	COUNTY	TOTAL SHEETS	SHEET NO.
1388	(Z-2C-15D)BR-1	PEORIA	90	73

CONTRACT NO. 68862

ILLINOIS FED. AID PROJECT

FINAL SURVEY		BY	DATE
	SURVEYED		
	PLOTTED		
	TEMPLATE		
NOTE BOOK	AREAS		
NO.	AREAS CHECKED		

ORIGINAL SURVEY		BY	DATE
	SURVEYED		
	PLOTTED		
	TEMPLATE		
NOTE BOOK	AREAS		
NO.	AREAS CHECKED		

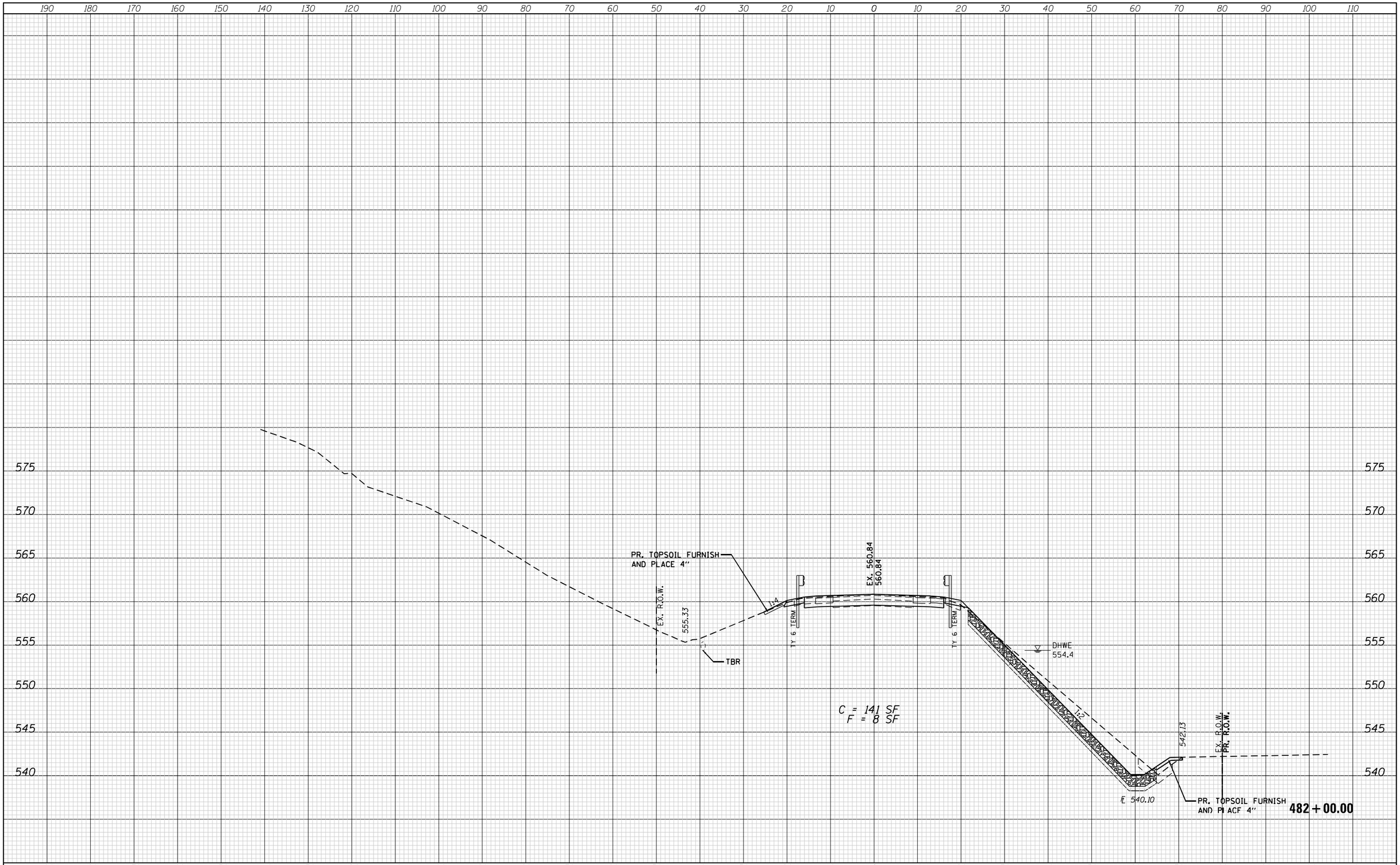

FILE NAME =	USER NAME = efisher	DESIGNED -	REVISED -
P:\2009\090072\IL 8-Kick\4.CADD\4.2-TR\SHEETS\D468862-sht-xssht-rdwy.dgn		DRAWN -	REVISED -
	PLOT SCALE = 20.0000 ' / in.	CHECKED -	REVISED -
Default	PLOT DATE = 6/14/2022	DATE -	REVISED -

STATE OF ILLINOIS
DEPARTMENT OF TRANSPORTATION

ROADWAY CROSS SECTIONS
IL 8 OVER THE WEST FORK OF KICKAPOO CREEK

SCALE: 1" = 10' | SHEET 17 OF 25 SHEETS | STA. 482+00.00 TO STA. 482+00.00

F.A. RTE.	SECTION	COUNTY	TOTAL SHEETS	SHEET NO.
1388	(Z-2C-15D)BR-1	PEORIA	90	74
		CONTRACT NO. 68862		
		ILLINOIS FED. AID PROJECT		

FINAL SURVEY		BY	DATE
NOTE BOOK	SURVEYED		
	PLOTTED		
	TEMPLATE		
	AREAS		
NO.	AREAS CHECKED		

ORIGINAL SURVEY		BY	DATE
NOTE BOOK	SURVEYED		
	PLOTTED		
	TEMPLATE		
	AREAS		
NO.	AREAS CHECKED		

FILE NAME = P:\2009\090072\IL 8-Kick\4. CADD\4.2-TR\SHEETS\D468862-sht-xssht-rdwy.dgn	USER NAME = efisher	DESIGNED -	REVISED -
		DRAWN -	REVISED -
	PLOT SCALE = 20.0000 ' / in.	CHECKED -	REVISED -
Default	PLOT DATE = 6/14/2022	DATE -	REVISED -

STATE OF ILLINOIS
DEPARTMENT OF TRANSPORTATION

ROADWAY CROSS SECTIONS
IL 8 OVER THE WEST FORK OF KICKAPOO CREEK

SCALE: 1" = 10' | SHEET 18 OF 25 SHEETS | STA. 482+14.31 TO STA. 482+14.31

F.A. RTE.	SECTION	COUNTY	TOTAL SHEETS	SHEET NO.
1388	(Z-2C-15D)BR-1	PEORIA	90	75
		CONTRACT NO. 68862		
	ILLINOIS	FED. AID PROJECT		

FINAL SURVEY		BY	DATE
NOTE BOOK NO.	SURVEYED		
	PLOTTED		
	TEMPLATE		
	AREAS		
	AREAS CHECKED		

ORIGINAL SURVEY		BY	DATE
NOTE BOOK NO.	SURVEYED		
	PLOTTED		
	TEMPLATE		
	AREAS		
	AREAS CHECKED		

FILE NAME =	USER NAME = efisher	DESIGNED -	REVISED -
P:\2009\090072\IL 8-Kick\4.CADD\4.2-TR\SHEETS\D468862-sht-xssht-rdwy.dgn		DRAWN -	REVISED -
	PLOT SCALE = 20.0000 ' / in.	CHECKED -	REVISED -
Default	PLOT DATE = 6/14/2022	DATE -	REVISED -

STATE OF ILLINOIS
DEPARTMENT OF TRANSPORTATION

ROADWAY CROSS SECTIONS
IL 8 OVER THE WEST FORK OF KICKAPOO CREEK

SCALE: 1" = 10' | SHEET 19 OF 25 SHEETS | STA. 482+25.00 TO STA. 482+25.00

F.A. RTE.	SECTION	COUNTY	TOTAL SHEETS	SHEET NO.
1388	(Z-2C-15D)BR-1	PEORIA	90	76
		CONTRACT NO. 68862		
		ILLINOIS FED. AID PROJECT		

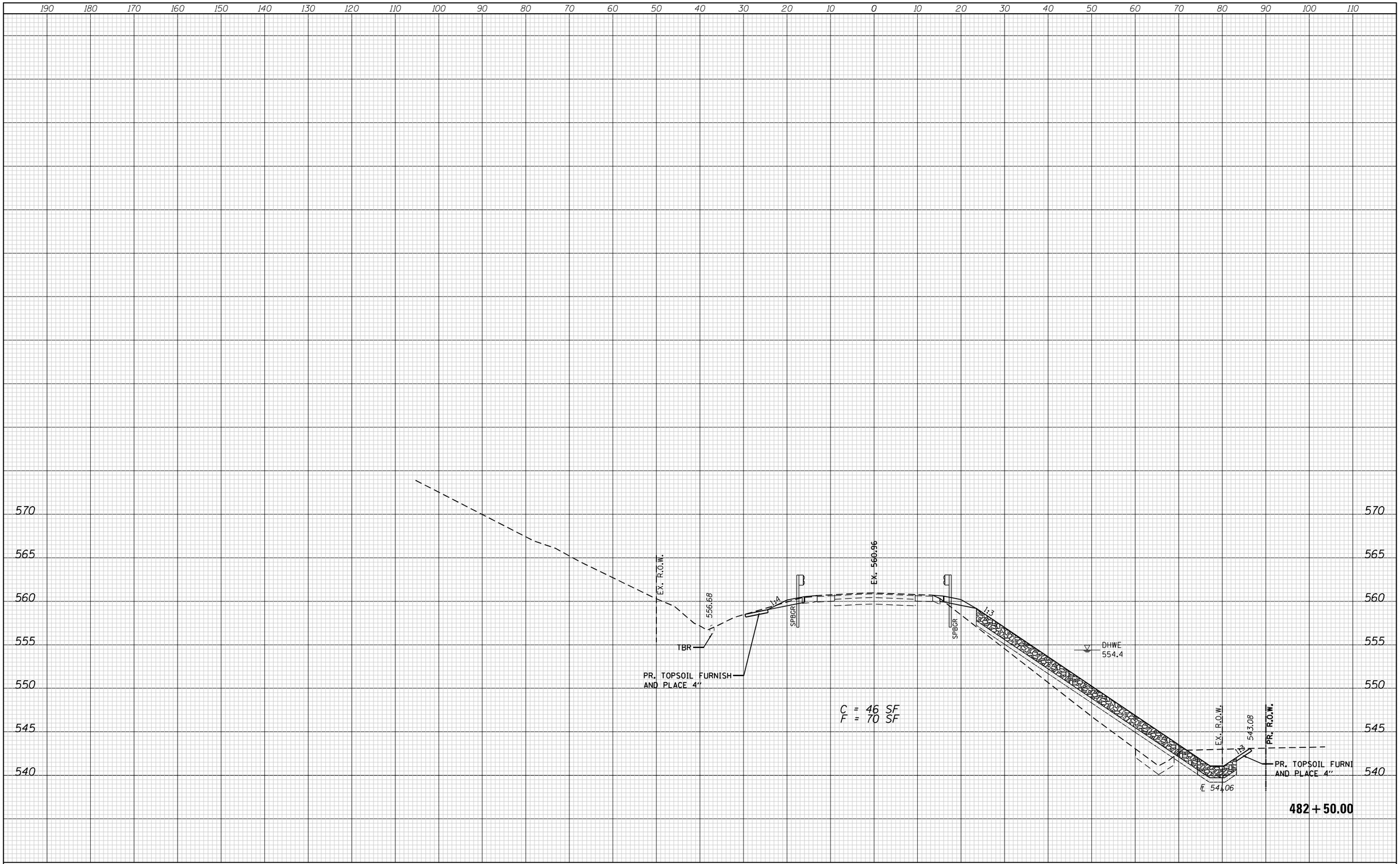

FINAL SURVEY		BY	DATE
NOTE BOOK	SURVEYED		
	PLOTTED		
	TEMPLATE		
	AREAS		
NO.	AREAS CHECKED		

ORIGINAL SURVEY		BY	DATE
NOTE BOOK	SURVEYED		
	PLOTTED		
	TEMPLATE		
	AREAS		
NO.	AREAS CHECKED		

FILE NAME =	USER NAME = efisher	DESIGNED -	REVISED -
P:\2009\090072\IL 8-Kick\4. CADD\4.2-TR\SHEETS\D468862-sht-xssht-rdwy.dgn		DRAWN -	REVISED -
	PLOT SCALE = 20.0000 ' / in.	CHECKED -	REVISED -
Default	PLOT DATE = 6/14/2022	DATE -	REVISED -

STATE OF ILLINOIS
DEPARTMENT OF TRANSPORTATION

ROADWAY CROSS SECTIONS
IL 8 OVER THE WEST FORK OF KICKAPOO CREEK

SCALE: 1" = 10' | SHEET 20 OF 25 SHEETS | STA. 482+50.00 TO STA. 482+50.00

F.A. RTE.	SECTION	COUNTY	TOTAL SHEETS	SHEET NO.
1388	(Z-2C-15D)BR-1	PEORIA	90	77
		CONTRACT NO. 68862		
		ILLINOIS FED. AID PROJECT		

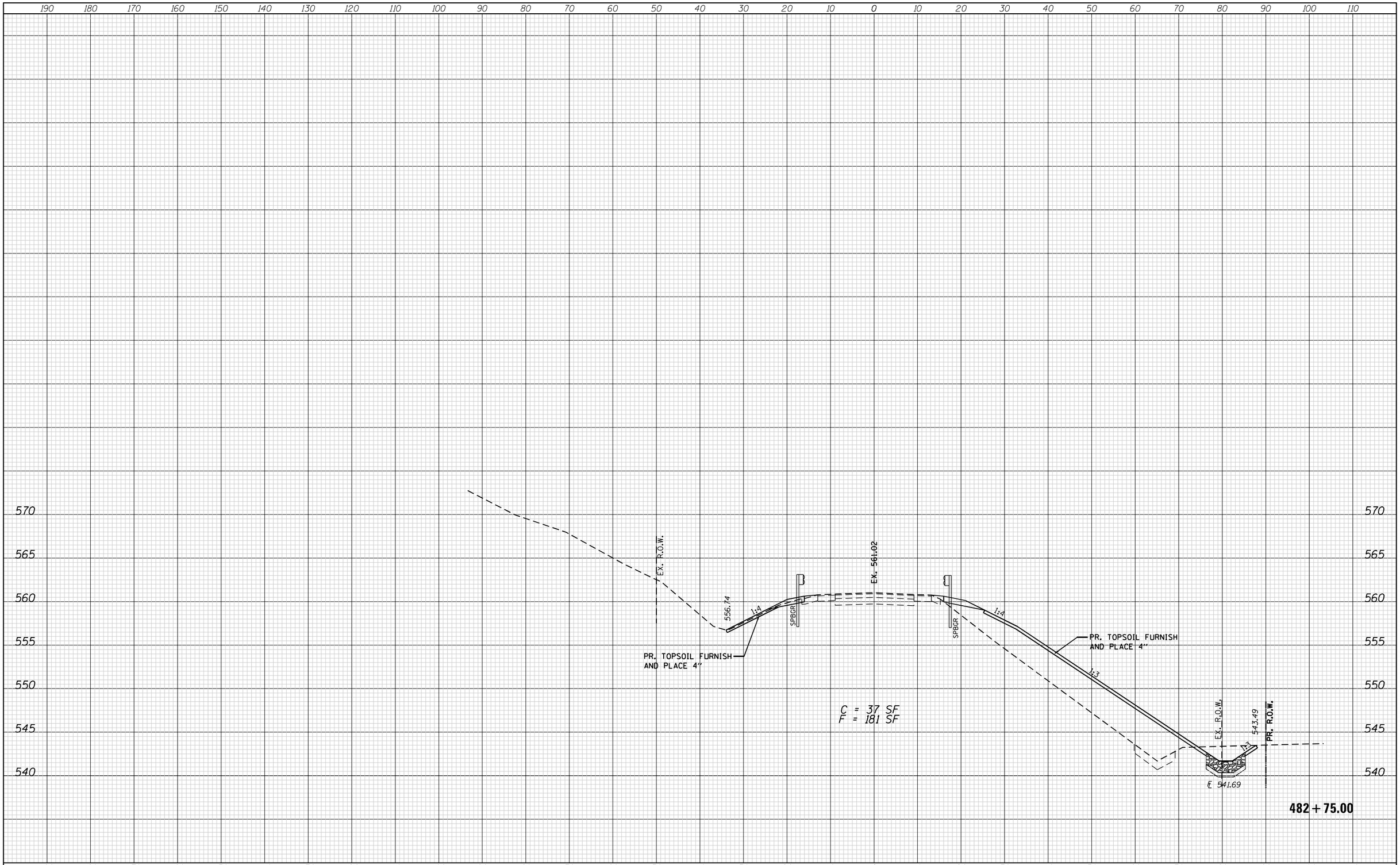

FINAL SURVEY		BY	DATE
NOTE BOOK	SURVEYED		
	PLOTTED		
	TEMPLATE		
	AREAS		
NO.	AREAS CHECKED		

ORIGINAL SURVEY		BY	DATE
NOTE BOOK	SURVEYED		
	PLOTTED		
	TEMPLATE		
	AREAS		
NO.	AREAS CHECKED		

FILE NAME = P:\2009\090072\IL 8-Kick\4. CADD\4.2-TR\SHEETS\D468862-sht-xssht-rdwy.dgn	USER NAME = efisher	DESIGNED -	REVISED -
		DRAWN -	REVISED -
	PLOT SCALE = 20.0000 ' / in.	CHECKED -	REVISED -
Default	PLOT DATE = 6/14/2022	DATE -	REVISED -

STATE OF ILLINOIS
DEPARTMENT OF TRANSPORTATION

ROADWAY CROSS SECTIONS
IL 8 OVER THE WEST FORK OF KICKAPOO CREEK

SCALE: 1" = 10' | SHEET 21 OF 25 SHEETS | STA. 482+75.00 TO STA. 482+75.00

F.A. RTE.	SECTION	COUNTY	TOTAL SHEETS	SHEET NO.
1388	(Z-2C-15D)BR-1	PEORIA	90	78
		CONTRACT NO. 68862		
		ILLINOIS FED. AID PROJECT		

FINAL SURVEY	BY	DATE
SURVEY'ED		
PLOTTED		
TEMPLATE		
AREAS		
AREAS CHECKED		
NOTE BOOK NO.		

ORIGINAL SURVEY	BY	DATE
SURVEY'ED		
PLOTTED		
TEMPLATE		
AREAS		
AREAS CHECKED		
NOTE BOOK NO.		

FILE NAME = P:\2009\090072\IL 8-Kick\4. CADD\4.2-TR\SHEETS\D468862-sht-xssht-rdwy.dgn	USER NAME = efisher	DESIGNED -	REVISED -
	PLOT SCALE = 20.0000 ' / in.	DRAWN -	REVISED -
		CHECKED -	REVISED -
Default	PLOT DATE = 6/14/2022	DATE -	REVISED -

STATE OF ILLINOIS
DEPARTMENT OF TRANSPORTATION

ROADWAY CROSS SECTIONS
IL 8 OVER THE WEST FORK OF KICKAPOO CREEK

SCALE: 1" = 10' | SHEET 22 OF 25 SHEETS | STA. 483+00.00 TO STA. 483+00.00

F.A. RTE.	SECTION	COUNTY	TOTAL SHEETS	SHEET NO.
1388	(Z-2C-15D)BR-1	PEORIA	90	79
		CONTRACT NO. 68862		
		ILLINOIS FED. AID PROJECT		

FINAL SURVEY		BY	DATE
NOTE BOOK NO.	SURVEYED		
	PLOTTED		
	TEMPLATE		
	AREAS		
	AREAS CHECKED		

ORIGINAL SURVEY		BY	DATE
NOTE BOOK NO.	SURVEYED		
	PLOTTED		
	TEMPLATE		
	AREAS		
	AREAS CHECKED		

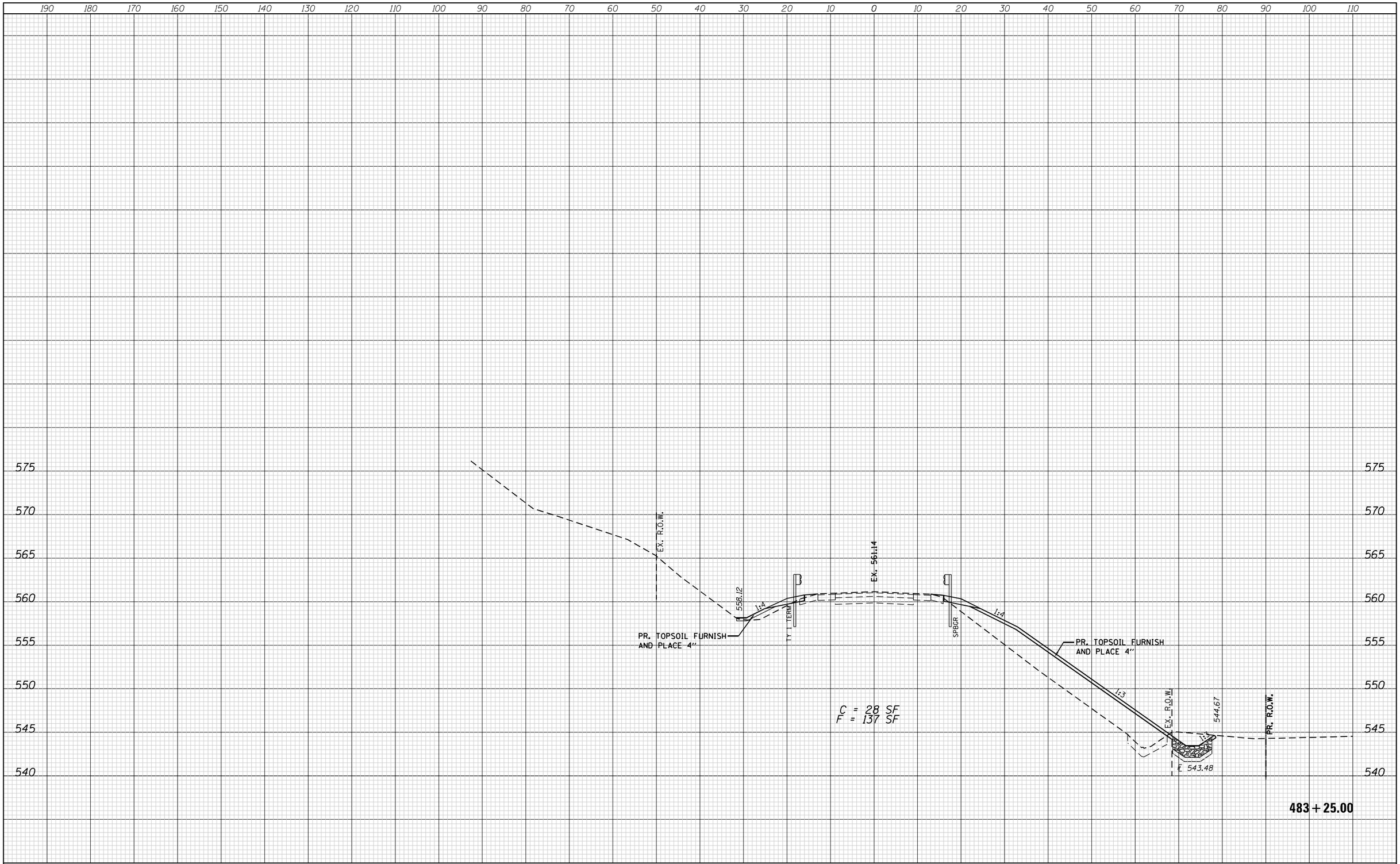

FILE NAME =	USER NAME = efisher	DESIGNED -	REVISED -
P:\2009\090072\IL 8-Kick\4.CADD\4.2-TR\SHEETS\D468862-sht-xssht-rdwy.dgn		DRAWN -	REVISED -
	PLOT SCALE = 20.0000 ' / in.	CHECKED -	REVISED -
Default	PLOT DATE = 6/14/2022	DATE -	REVISED -

STATE OF ILLINOIS
DEPARTMENT OF TRANSPORTATION

ROADWAY CROSS SECTIONS
IL 8 OVER THE WEST FORK OF KICKAPOO CREEK

SCALE: 1" = 10' | SHEET 23 OF 25 SHEETS | STA. 483+25.00 TO STA. 483+25.00

F.A. RTE.	SECTION	COUNTY	TOTAL SHEETS	SHEET NO.
1388	(Z-2C-15D)BR-1	PEORIA	90	80
		CONTRACT NO. 68862		
		ILLINOIS FED. AID PROJECT		

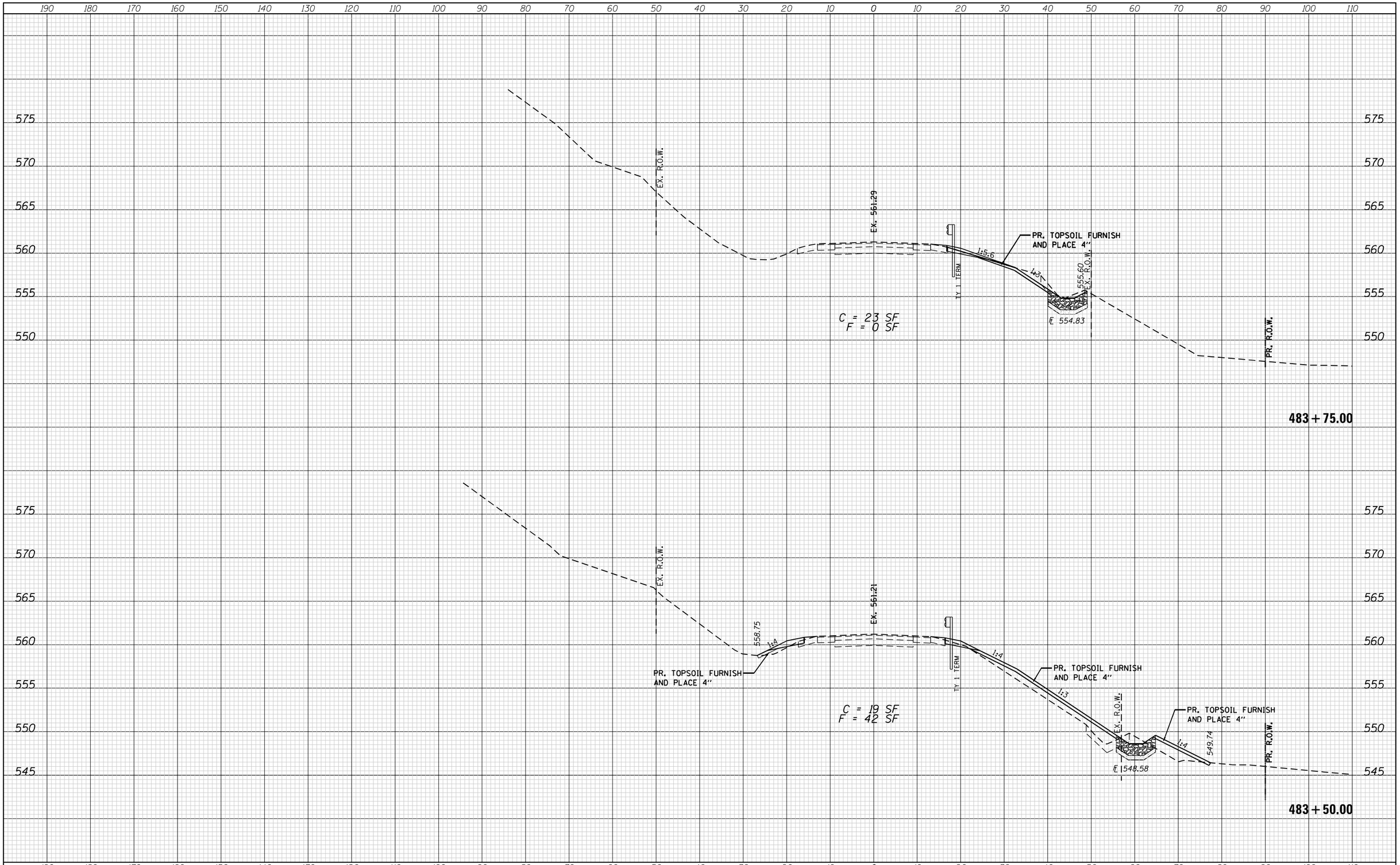

FINAL SURVEY		BY	DATE
	SURVEYED		
	PLOTTED		
	TEMPLATE		
NOTE BOOK	AREAS		
	AREAS CHECKED		
NO.			

ORIGINAL SURVEY		BY	DATE
	SURVEYED		
	PLOTTED		
	TEMPLATE		
NOTE BOOK	AREAS		
	AREAS CHECKED		
NO.			

FILE NAME = P:\2009\090072\IL 8-Kick\4. CADD\4.2-TR\SHEETS\D468862-sht-xssht-rdwy.dgn	USER NAME = efisher	DESIGNED -	REVISED -
		DRAWN -	REVISED -
	PLOT SCALE = 20.0000 ' / in.	CHECKED -	REVISED -
Default	PLOT DATE = 6/14/2022	DATE -	REVISED -

STATE OF ILLINOIS
DEPARTMENT OF TRANSPORTATION

ROADWAY CROSS SECTIONS
IL 8 OVER THE WEST FORK OF KICKAPOO CREEK

SCALE: 1" = 10' | SHEET 24 OF 25 SHEETS | STA. 483+50.00 TO STA. 483+75.00

F.A. RTE.	SECTION	COUNTY	TOTAL SHEETS	SHEET NO.
1388	(Z-2C-15D)BR-1	PEORIA	90	81
		CONTRACT NO. 68862		
		ILLINOIS FED. AID PROJECT		

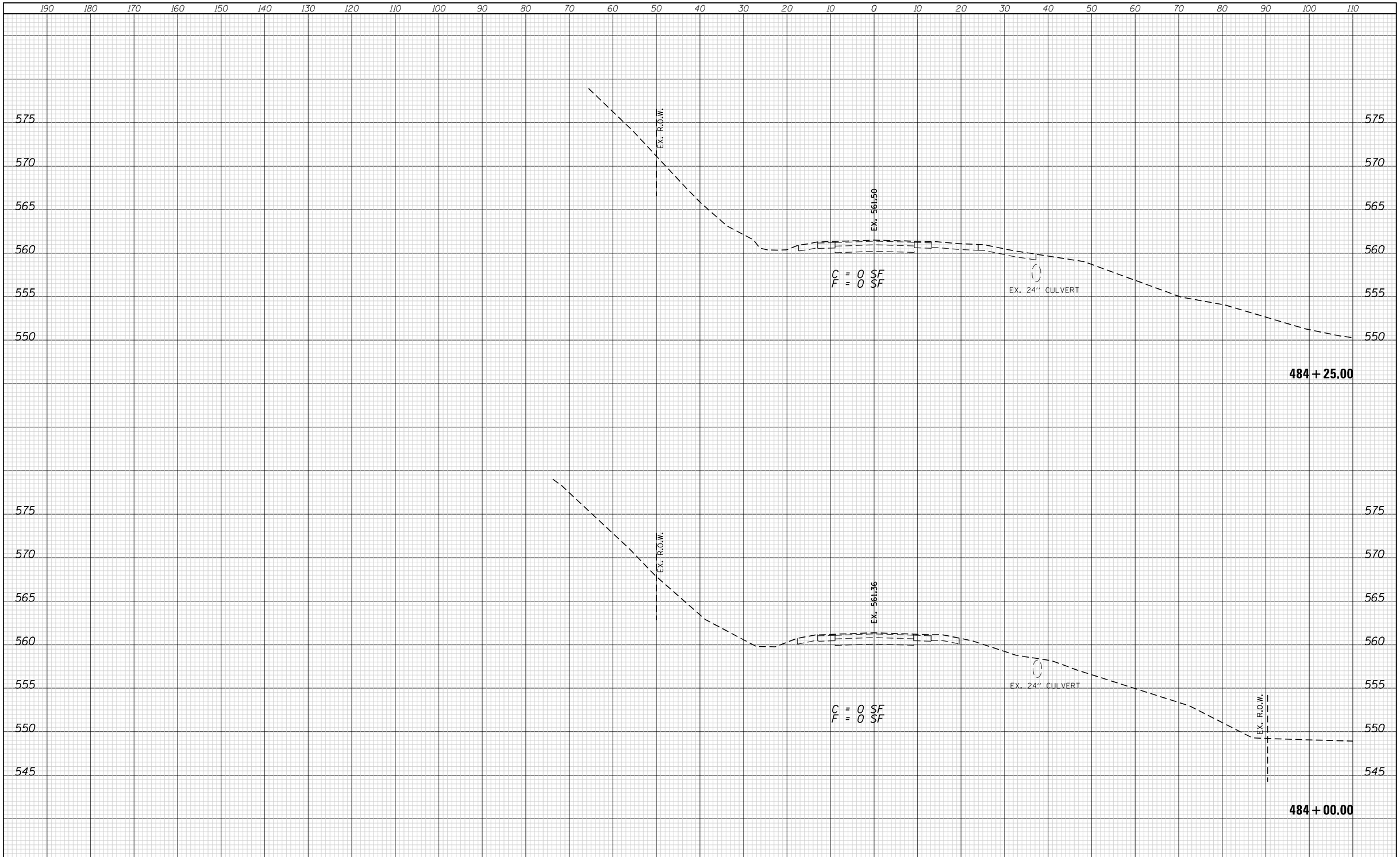

FINAL SURVEY		BY	DATE
NOTE BOOK	SURVEYED		
	PLOTTED		
	TEMPLATE		
	AREAS		
NO.	AREAS CHECKED		

ORIGINAL SURVEY		BY	DATE
NOTE BOOK	SURVEYED		
	PLOTTED		
	TEMPLATE		
	AREAS		
NO.	AREAS CHECKED		

FILE NAME = P:\2009\090072\IL 8-Kick\4.CADD\4.2-TR\SHEETS\D468862-sht-xssht-rdwy.dgn	USER NAME = efisher	DESIGNED -	REVISED -
		DRAWN -	REVISED -
	PLOT SCALE = 20.0000 ' / in.	CHECKED -	REVISED -
Default	PLOT DATE = 6/14/2022	DATE -	REVISED -

STATE OF ILLINOIS
DEPARTMENT OF TRANSPORTATION

ROADWAY CROSS SECTIONS
IL 8 OVER THE WEST FORK OF KICKAPOO CREEK

SCALE: 1" = 10' | SHEET 25 OF 25 SHEETS | STA. 484+00.00 TO STA. 484+25.00

F.A. RTE.	SECTION	COUNTY	TOTAL SHEETS	SHEET NO.
1388	(Z-2C-15D)BR-1	PEORIA	90	82
		CONTRACT NO. 68862		
		ILLINOIS FED. AID PROJECT		

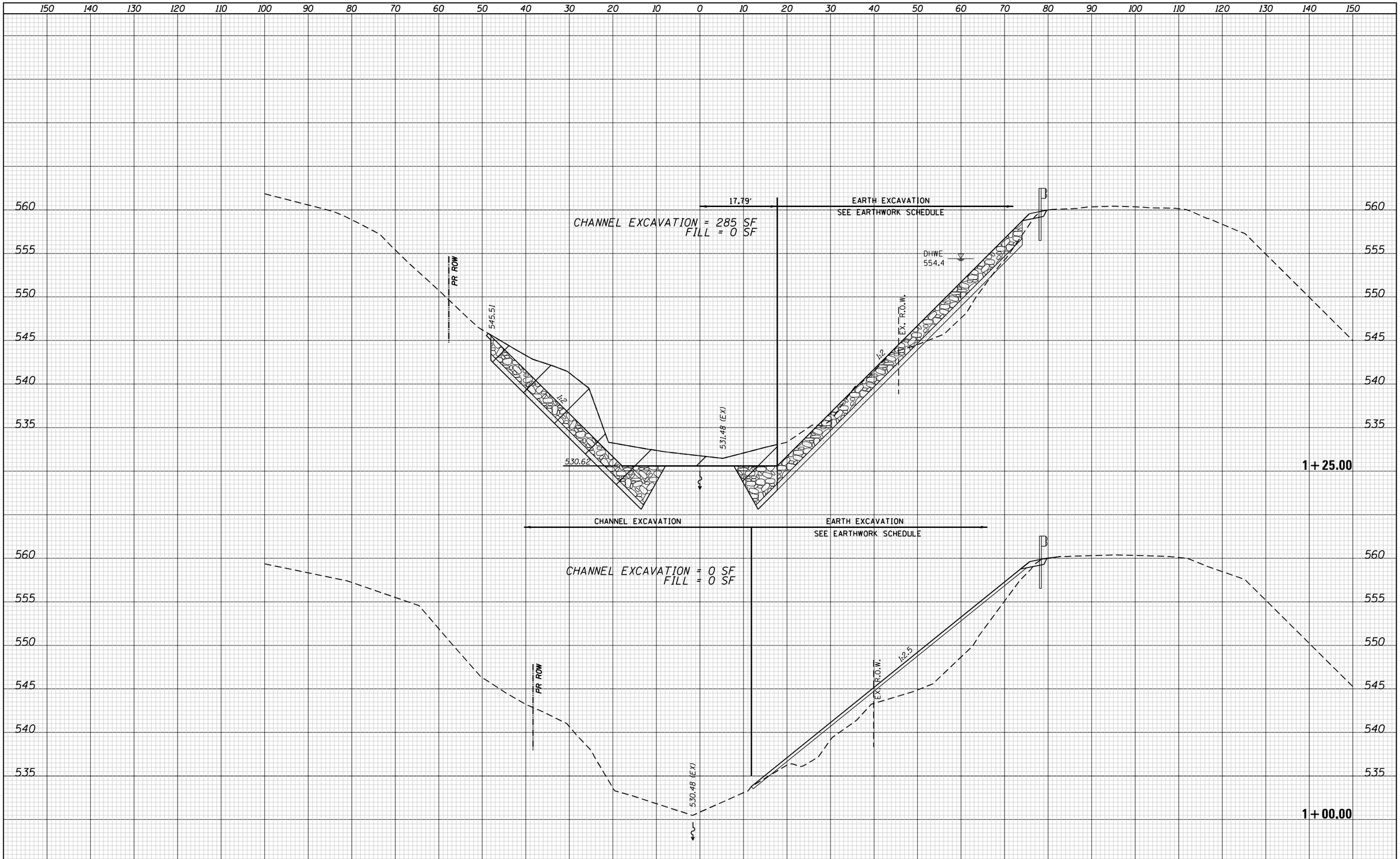

FINAL SURVEY		BY	DATE
NOTE BOOK	SURVEYED		
	PLOTTED		
	TEMPLATE		
	AREAS		
NO.	AREAS CHECKED		

ORIGINAL SURVEY		BY	DATE
NOTE BOOK	SURVEYED		
	PLOTTED		
	TEMPLATE		
	AREAS		
NO.	AREAS CHECKED		

FILE NAME = P:\2009\090072\IL 8-Kick\4. CADD\4.2-TR\SHEETS\D468862-sht-xssht-channel.dgn	USER NAME = efisher	DESIGNED -	REVISED -
		DRAWN -	REVISED -
	PLOT SCALE = 20.0000 ' / in.	CHECKED -	REVISED -
Default	PLOT DATE = 6/14/2022	DATE -	REVISED -

STATE OF ILLINOIS
DEPARTMENT OF TRANSPORTATION

CHANNEL CROSS SECTIONS
IL 8 OVER THE WEST FORK OF KICKAPOO CREEK

SCALE: 1" = 10' | SHEET 1 OF 8 SHEETS | STA. 1+00.00 TO STA.1+25.00

F.A. RTE.	SECTION	COUNTY	TOTAL SHEETS	SHEET NO.
1388	(Z-2C-15D)BR-1	PEORIA	90	83
		CONTRACT NO. 68862		
	ILLINOIS	FED. AID PROJECT		

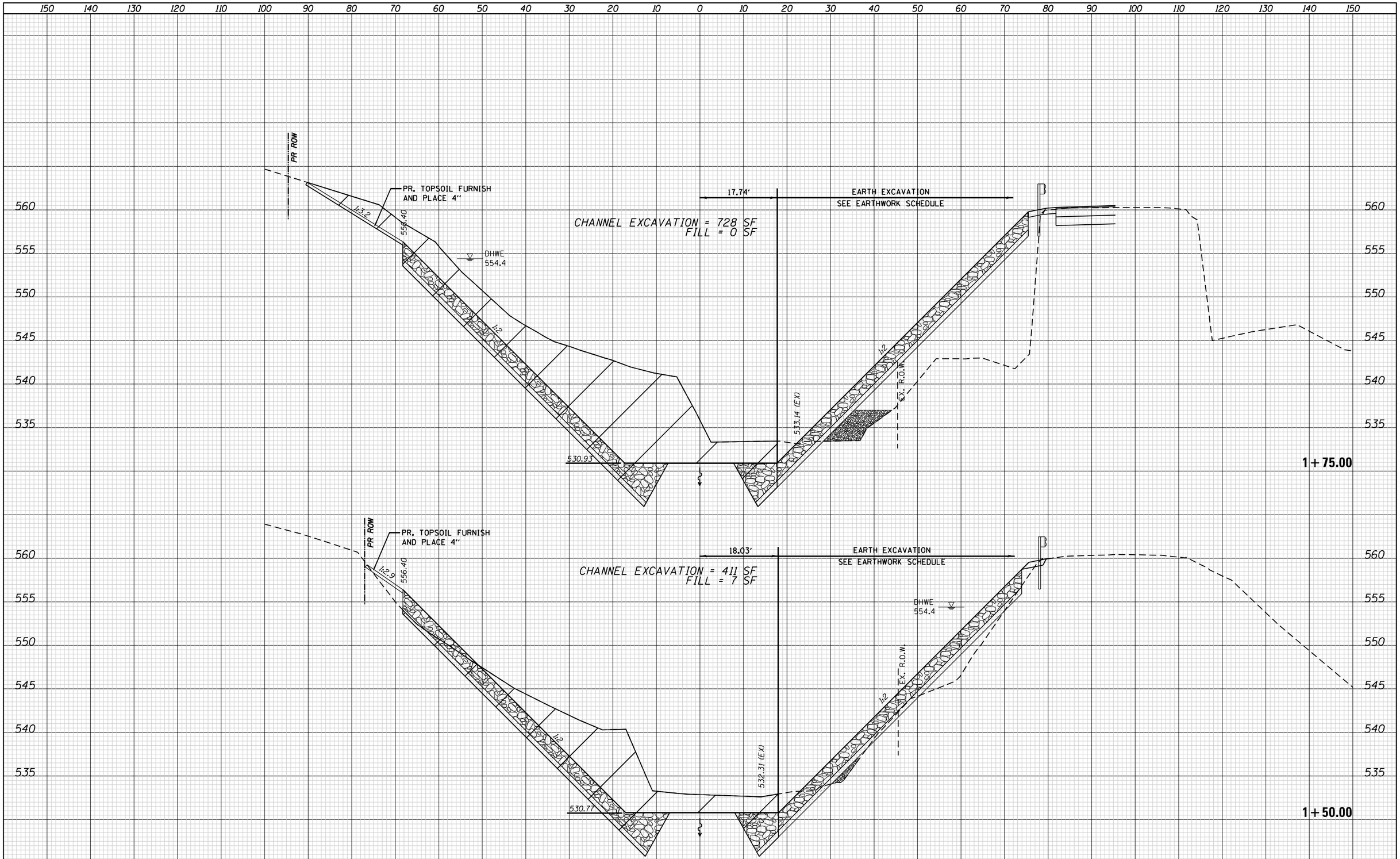

FINAL SURVEY	BY	DATE
SURVEYED		
PLOTTED		
TEMPLATE		
AREAS		
AREAS CHECKED		
NOTE BOOK		
NO.		

ORIGINAL SURVEY	BY	DATE
SURVEYED		
PLOTTED		
TEMPLATE		
AREAS		
AREAS CHECKED		
NOTE BOOK		
NO.		

FILE NAME =	USER NAME = efisher	DESIGNED -	REVISED -
P:\2009\090072\IL 8-Kick\4.CADD\4.2-TR\SHEETS\	D468862-sht-xssht-channel.dgn	DRAWN -	REVISED -
	PLOT SCALE = 20.0000 ' / in.	CHECKED -	REVISED -
Default	PLOT DATE = 6/14/2022	DATE -	REVISED -

STATE OF ILLINOIS
DEPARTMENT OF TRANSPORTATION

CHANNEL CROSS SECTIONS
IL 8 OVER THE WEST FORK OF KICKAPOO CREEK

SCALE: 1" = 10' | SHEET 2 OF 8 SHEETS | STA. 1+50.00 TO STA. 1+75.00

F.A. RTE.	SECTION	COUNTY	TOTAL SHEETS	SHEET NO.
1388	(Z-2C-15D)BR-1	PEORIA	90	84
		CONTRACT NO. 68862		
		ILLINOIS FED. AID PROJECT		

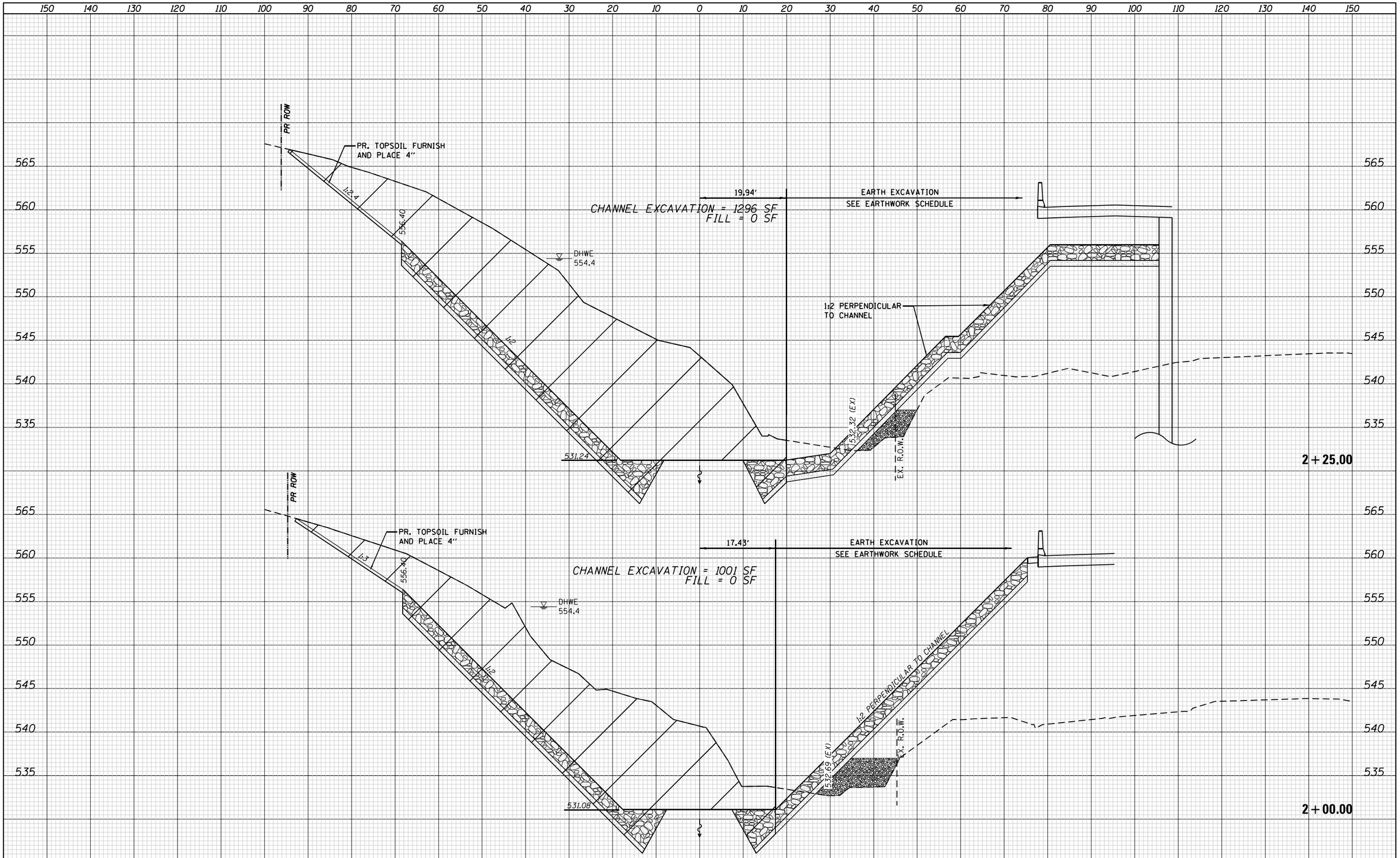

FINAL SURVEY		BY	DATE
NOTE BOOK	SURVEYED		
	PLOTTED		
	TEMPLATE		
	AREAS		
NO.	AREAS CHECKED		

ORIGINAL SURVEY		BY	DATE
NOTE BOOK	SURVEYED		
	PLOTTED		
	TEMPLATE		
	AREAS		
NO.	AREAS CHECKED		

FILE NAME =	USER NAME = efisher	DESIGNED -	REVISED -
P:\2009\090072\IL 8-Kick\4.CADD\4.2-TR\SHEETS\	D468862-sht-xssht-channel.dgn	DRAWN -	REVISED -
	PLOT SCALE = 20.0000 ' / in.	CHECKED -	REVISED -
Default	PLOT DATE = 6/14/2022	DATE -	REVISED -

STATE OF ILLINOIS
DEPARTMENT OF TRANSPORTATION

CHANNEL CROSS SECTIONS
IL 8 OVER THE WEST FORK OF KICKAPOO CREEK

SCALE: 1" = 10' | SHEET 3 OF 8 SHEETS | STA. 2+00.00 TO STA. 2+25.00

F.A. RTE.	SECTION	COUNTY	TOTAL SHEETS	SHEET NO.
1388	(Z-2C-15D)BR-1	PEORIA	90	85
		CONTRACT NO. 68862		
		ILLINOIS FED. AID PROJECT		

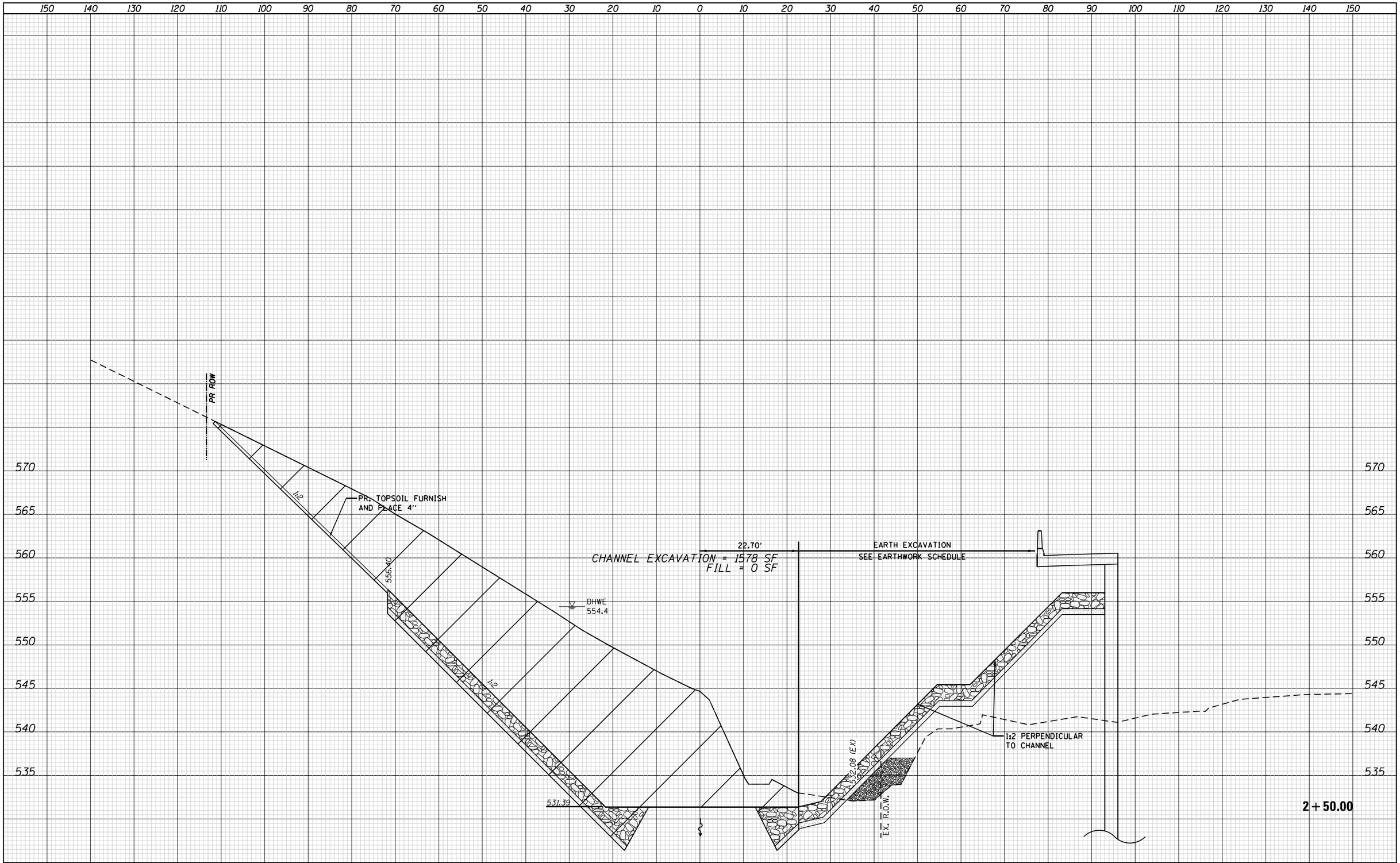

FINAL SURVEY		BY	DATE
	SURVEYED		
	PLOTTED		
NOTE BOOK	TEMPLATE		
	AREAS		
NO.	AREAS CHECKED		

ORIGINAL SURVEY		BY	DATE
	SURVEYED		
	PLOTTED		
NOTE BOOK	TEMPLATE		
	AREAS		
NO.	AREAS CHECKED		

FILE NAME =	USER NAME = efisher	DESIGNED -	REVISED -
P:\2009\090072\IL 8-Kick\4. CADD\4.2-TR\SHEETS\	D468862-sht-xssht-channel.dgn	DRAWN -	REVISED -
	PLOT SCALE = 20.0000 ' / in.	CHECKED -	REVISED -
Default	PLOT DATE = 6/14/2022	DATE -	REVISED -

STATE OF ILLINOIS
DEPARTMENT OF TRANSPORTATION

CHANNEL CROSS SECTIONS
IL 8 OVER THE WEST FORK OF KICKAPOO CREEK

SCALE: 1" = 10' | SHEET 4 OF 8 SHEETS | STA. 2+50.00 TO STA. 2+50.00

F.A. RTE.	SECTION	COUNTY	TOTAL SHEETS	SHEET NO.
1388	(Z-2C-15D)BR-1	PEORIA	90	86
		CONTRACT NO. 68862		
		ILLINOIS FED. AID PROJECT		

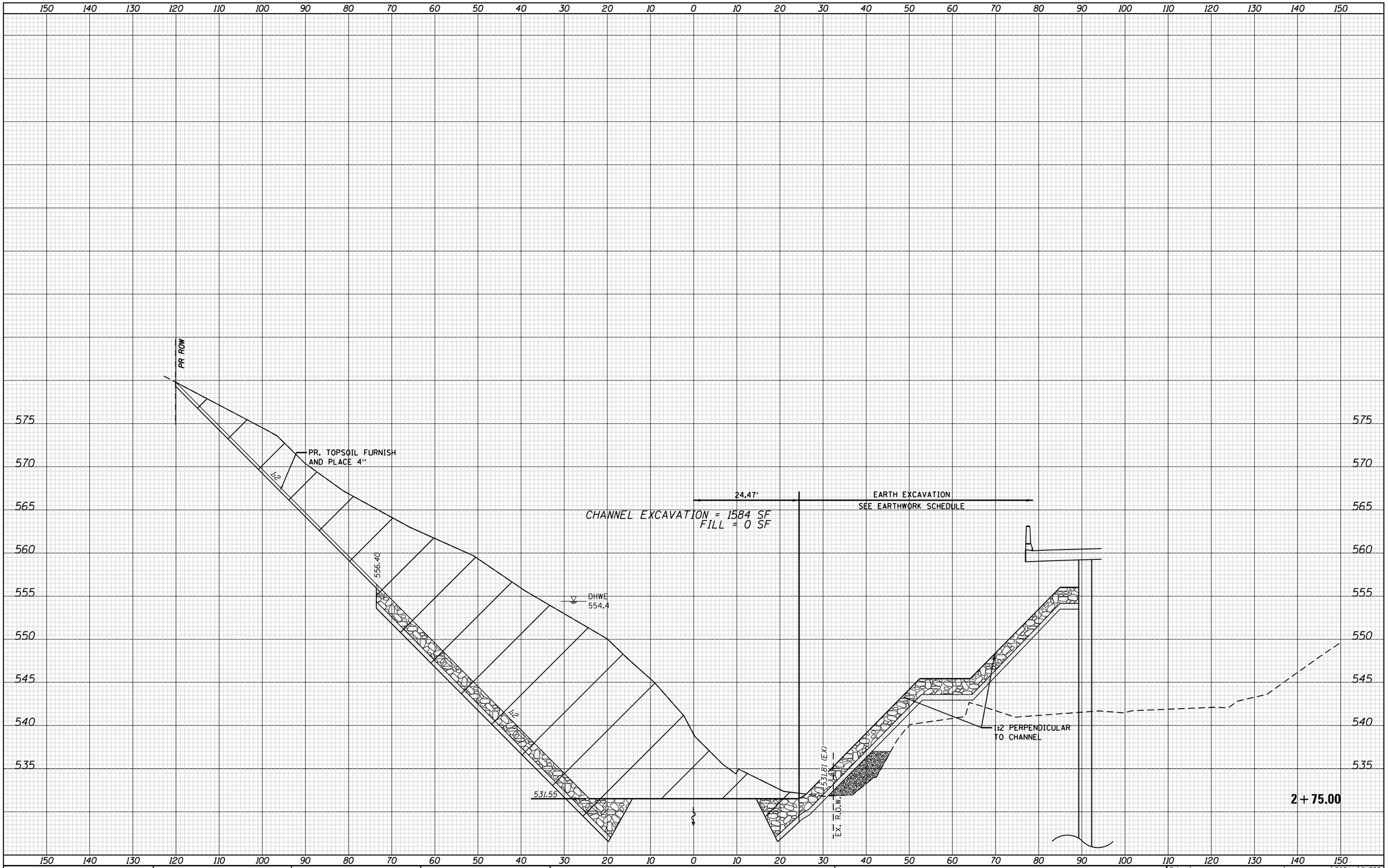

FINAL SURVEY	BY	DATE
SURVEYED		
PLOTTED		
TEMPLATE		
AREAS		
AREAS CHECKED		
NOTE BOOK NO.		

ORIGINAL SURVEY	BY	DATE
SURVEYED		
PLOTTED		
TEMPLATE		
AREAS		
AREAS CHECKED		
NOTE BOOK NO.		

FILE NAME = P:\2009\090072\IL 8-Kick\4.CADD\4.2-TR\SHEETS\D468862-sht-xssht-channel.dgn	USER NAME = efisher	DESIGNED -	REVISED -
		DRAWN -	REVISED -
	PLOT SCALE = 20.0000 ' / in.	CHECKED -	REVISED -
Default	PLOT DATE = 6/14/2022	DATE -	REVISED -

STATE OF ILLINOIS
DEPARTMENT OF TRANSPORTATION

CHANNEL CROSS SECTIONS
IL 8 OVER THE WEST FORK OF KICKAPOO CREEK

SCALE: 1" = 10' | SHEET 5 OF 8 SHEETS | STA. 2+75.00 TO STA. 2+75.00

F.A. RTE.	SECTION	COUNTY	TOTAL SHEETS	SHEET NO.
1388	(Z-2C-15D)BR-1	PEORIA	90	87
		CONTRACT NO. 68862		
	ILLINOIS	FED. AID PROJECT		

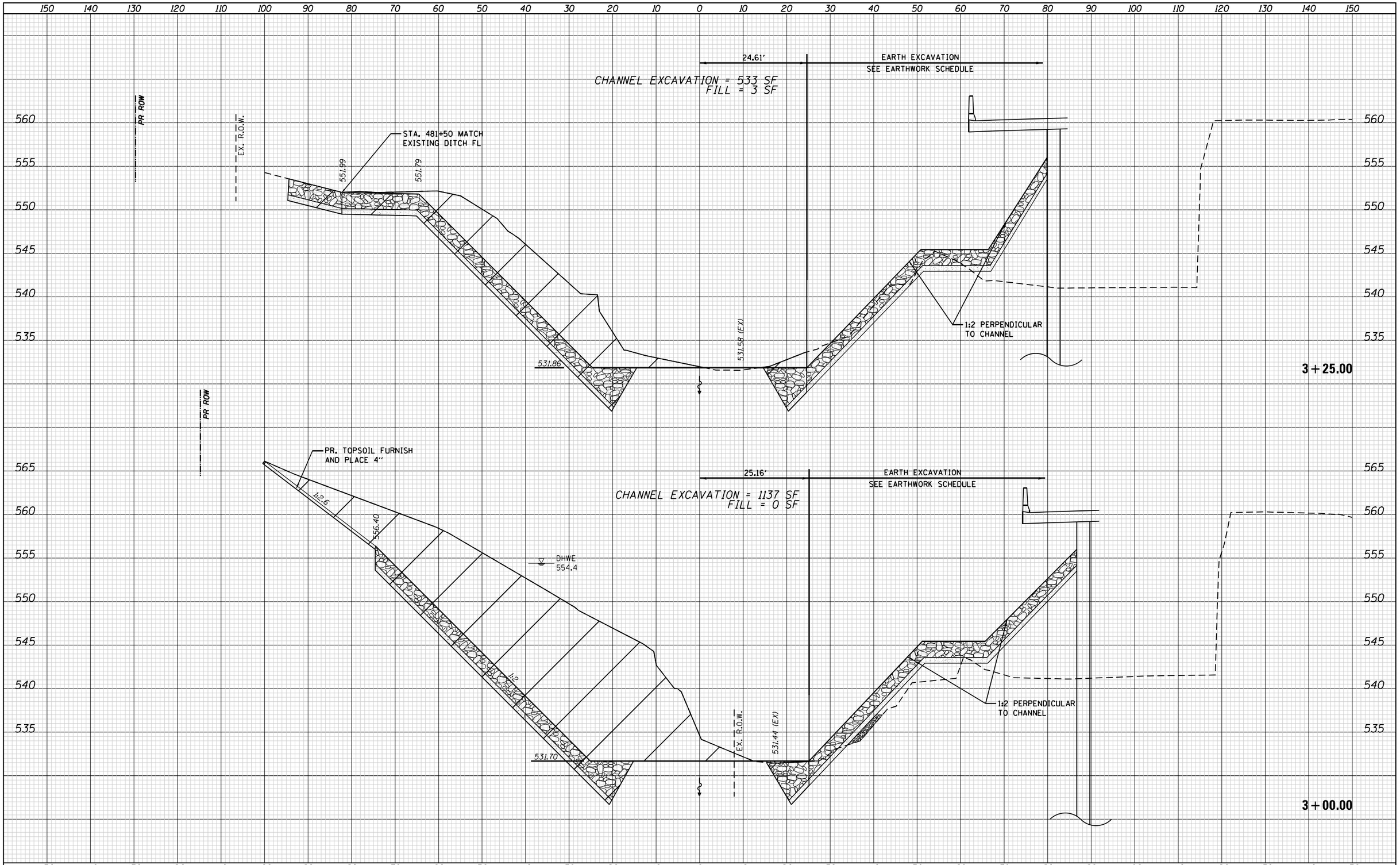

FINAL SURVEY	BY	DATE
SURVEYED		
PLOTTED		
TEMPLATE		
AREAS		
AREAS CHECKED		
NOTE BOOK NO.		

ORIGINAL SURVEY	BY	DATE
SURVEYED		
PLOTTED		
TEMPLATE		
AREAS		
AREAS CHECKED		
NOTE BOOK NO.		

FILE NAME = P:\2009\090072\IL 8-Kick\4. CADD\4.2-TR\SHEETS\D468862-sht-xssht-channel.dgn	USER NAME = efisher	DESIGNED -	REVISED -
		DRAWN -	REVISED -
	PLOT SCALE = 20.0000 ' / in.	CHECKED -	REVISED -
Default	PLOT DATE = 6/14/2022	DATE -	REVISED -

STATE OF ILLINOIS
DEPARTMENT OF TRANSPORTATION

CHANNEL CROSS SECTIONS
IL 8 OVER THE WEST FORK OF KICKAPOO CREEK

SCALE: 1" = 10' | SHEET 6 OF 8 SHEETS | STA. 3+00.00 TO STA. 3+25.00

F.A. RTE.	SECTION	COUNTY	TOTAL SHEETS	SHEET NO.
1388	(Z-2C-15D)BR-1	PEORIA	90	88
		CONTRACT NO. 68862		
	ILLINOIS	FED. AID PROJECT		

FINAL SURVEY		BY	DATE
	SURVEYED		
	PLOTTED		
NOTE BOOK	TEMPLATE		
	AREAS		
NO.	AREAS CHECKED		

ORIGINAL SURVEY		BY	DATE
	SURVEYED		
	PLOTTED		
NOTE BOOK	TEMPLATE		
	AREAS		
NO.	AREAS CHECKED		

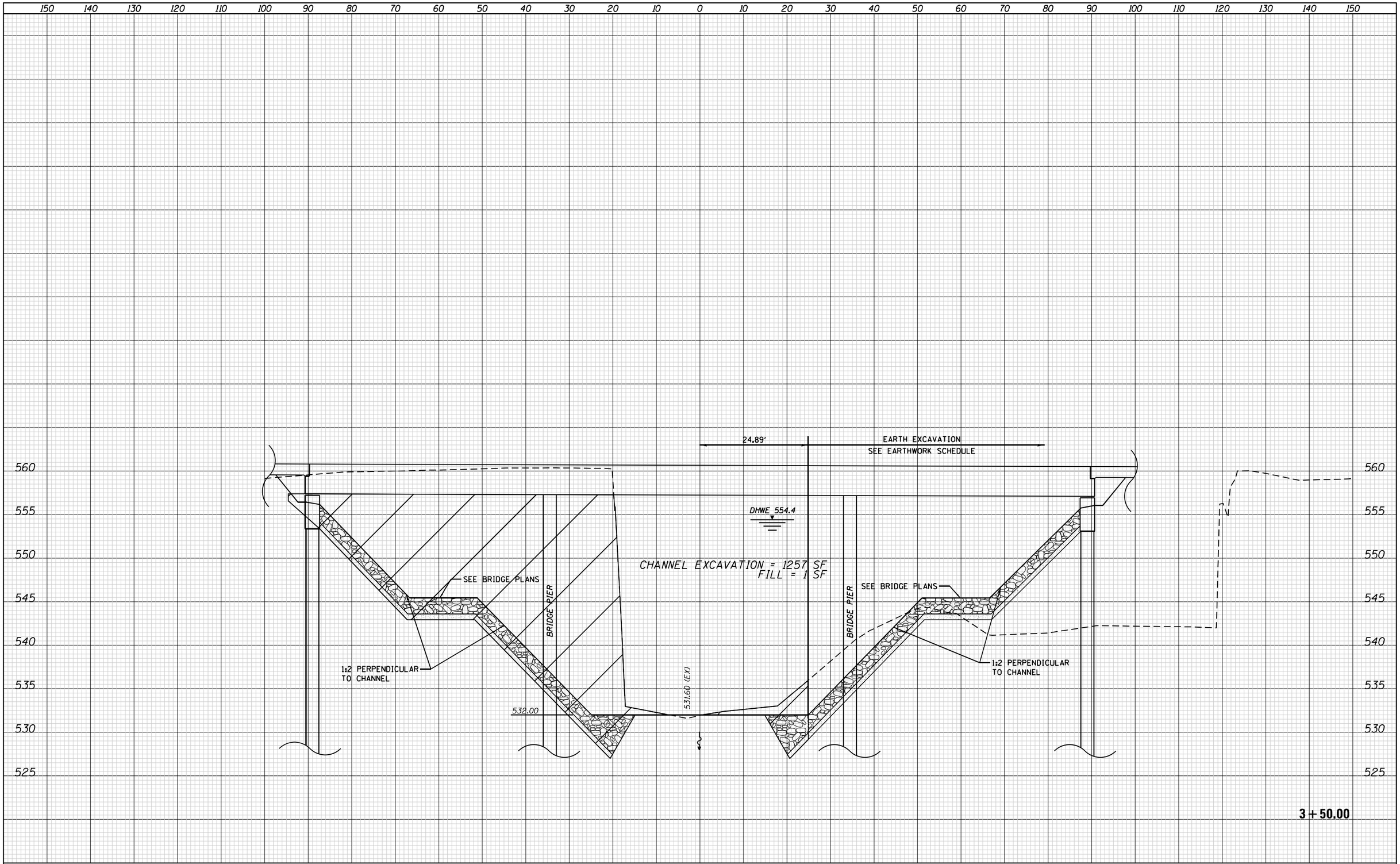

FILE NAME =	USER NAME = efisher	DESIGNED -	REVISED -
P:\2009\090072\IL 8-Kick\4.CADD\4.2-TR\SHEETS\D468862-sht-xssht-channel.dgn		DRAWN -	REVISED -
	PLOT SCALE = 20.0000 ' / in.	CHECKED -	REVISED -
Default	PLOT DATE = 6/14/2022	DATE -	REVISED -

STATE OF ILLINOIS
DEPARTMENT OF TRANSPORTATION

CHANNEL CROSS SECTIONS
IL 8 OVER THE WEST FORK OF KICKAPOO CREEK

SCALE: 1" = 10' | SHEET 7 OF 8 SHEETS | STA. 3+50.00 TO STA. 3+50.00

F.A. RTE.	SECTION	COUNTY	TOTAL SHEETS	SHEET NO.
1388	(Z-2C-15D)BR-1	PEORIA	90	89
		CONTRACT NO. 68862		
		ILLINOIS FED. AID PROJECT		

FINAL SURVEY		BY	DATE
NOTE BOOK NO.	SURVEYED		
	PLOTTED		
	TEMPLATE		
	AREAS		
	AREAS CHECKED		

ORIGINAL SURVEY		BY	DATE
NOTE BOOK NO.	SURVEYED		
	PLOTTED		
	TEMPLATE		
	AREAS		
	AREAS CHECKED		

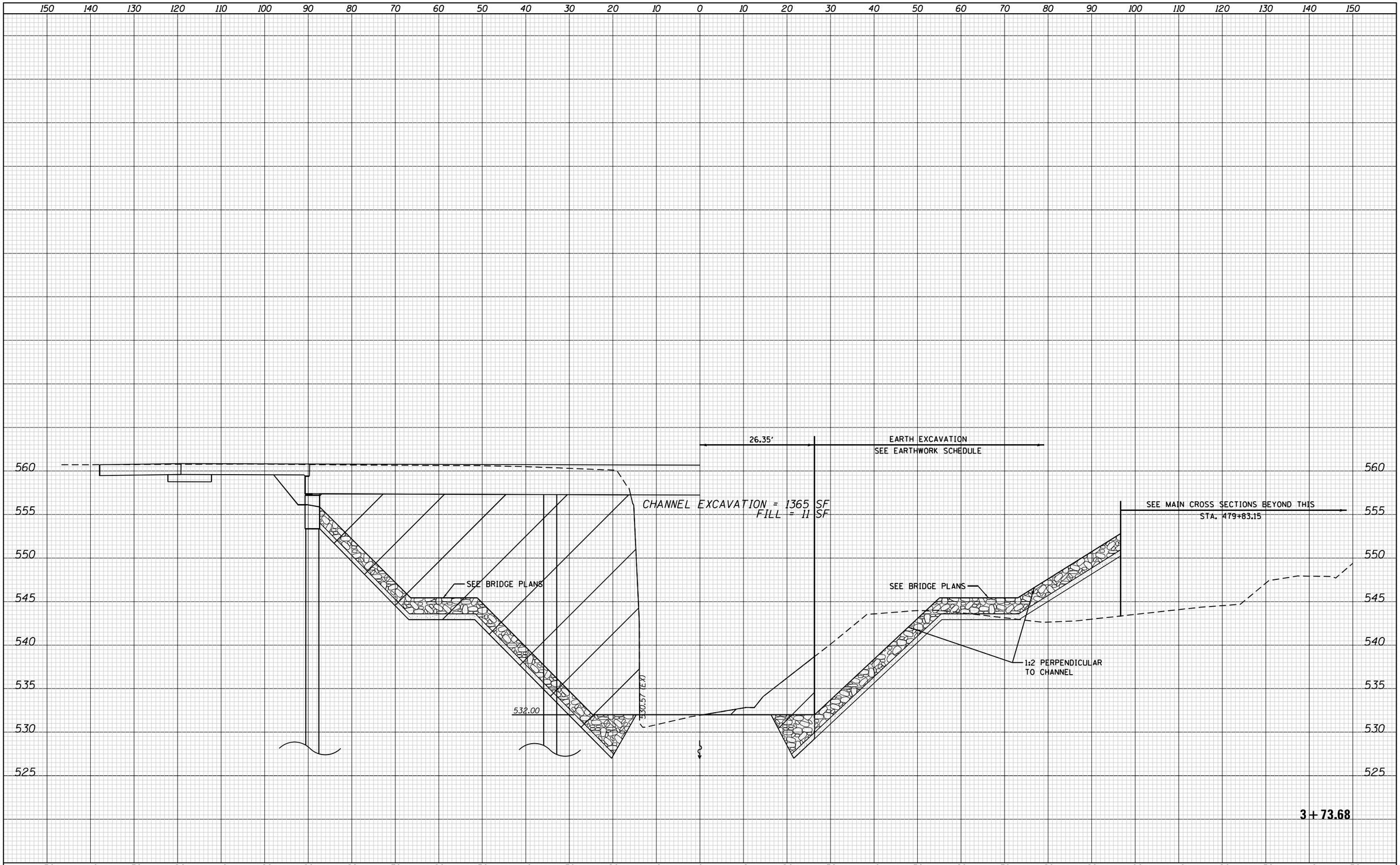

FILE NAME =	USER NAME = efisher	DESIGNED -	REVISED -
P:\2009\090072\IL 8-Kick\4.CADD\4.2-TR\SHEETS\D468862-sht-xssht-channel.dgn		DRAWN -	REVISED -
	PLOT SCALE = 20.0000 ' / in.	CHECKED -	REVISED -
Default	PLOT DATE = 6/14/2022	DATE -	REVISED -

STATE OF ILLINOIS
DEPARTMENT OF TRANSPORTATION

CHANNEL CROSS SECTIONS
IL 8 OVER THE WEST FORK OF KICKAPOO CREEK

SCALE: 1" = 10' | SHEET 8 OF 8 SHEETS | STA. 3+73.68 TO STA. 3+73.68

F.A. RTE.	SECTION	COUNTY	TOTAL SHEETS	SHEET NO.
1388	(Z-2C-15D)BR-1	PEORIA	90	90
		CONTRACT NO. 68862		
		ILLINOIS FED. AID PROJECT		