06-16-2023 LETTING ITEM 043

F.A.I. RTE.	SECTION	COUNTY	TOTAL SHEETS	SHEET NO.
57	(10-31HB) BR	CHAMPAIGN	65*	1
	ILLINOIS	CONTRACT NO. 70908		

* 65 + 1 = 66 TOTAL SHEETS

STATE OF ILLINOIS
DEPARTMENT OF TRANSPORTATION

PROPOSED HIGHWAY PLANS

F.A.I. ROUTE 57 (I–57)
SECTION (10–31HB)BR
PROJECT NHPP-41L9(250)
BRIDGE REPLACEMENT
CHAMPAIGN COUNTY

C–95–065–21
UNDER CH 17 1.8 MI E OF SADORUS

D-95-024-20

INDEX OF SHEETS

LICENSED PROFESSIONAL ENGINEER ERIC J.. LINDEMANN NO. 062-051170 STATE OF ILLINOIS

ERIC J. LINDEMANN, P.E.
IL. LIC. NO. 062–051170
EXP: 11 / 30 / 2023
DATE: 03 / 22 / 2023
SHEETS: 1–18, 28–29

JEFFREY EHRHART 062-059444 REGISTERED PROFESSIONAL ENGINEER OF ILLINOIS

JEFFREY EHRHART, P.E.
IL. LIC. NO. 062–059444
EXP: 11 / 30 / 2023
DATE: 03 / 22 / 2023
SHEETS: 19–23, 58–65

LICENSED PROFESSIONAL ENGINEER MUTHAYAB AHMED MOHAMMED 062-072419 OF ILLINOIS

MUTHAYAB AHMED MOHAMMED, P.E.
IL. LIC. NO. 062–072419
EXP: 11 / 30 / 2021
DATE: 03 / 22 / 2023
SHEETS: 24–27

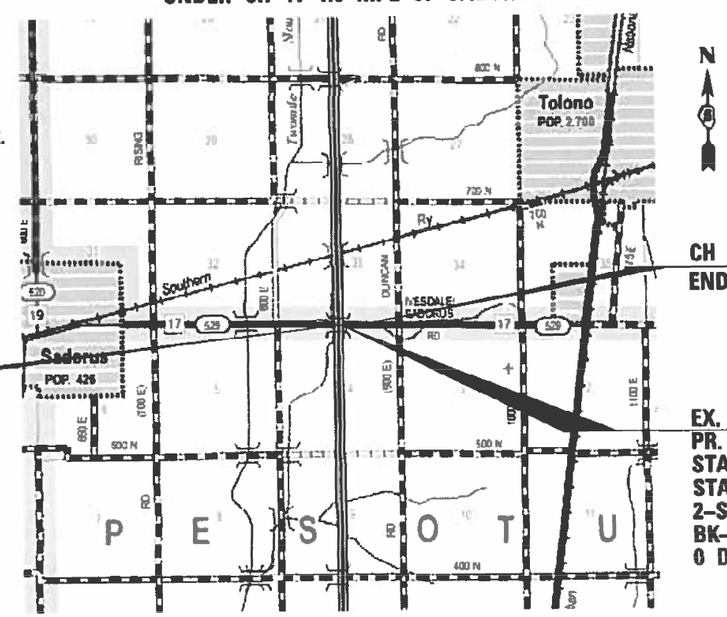

CH 17
BEGINS: STA 25 + 62.50

CH 17
ENDS: STA 34 + 37.50

EX. SN 010–0124
PR. SN 010–0295
STA. 29 + 90.61 (CH 17) =
STA. 367 + 59.97 (I–57)
2–SPAN AT 106'–6" = 213'–0"
BK–BK ABUTS
0 DEGREE SKEW

0 1 2
SCALE IN MILES

LOCATION MAP
GROSS LENGTH = 213 FT. = 0.040 MILE
NET LENGTH = 213 FT. = 0.040 MILE

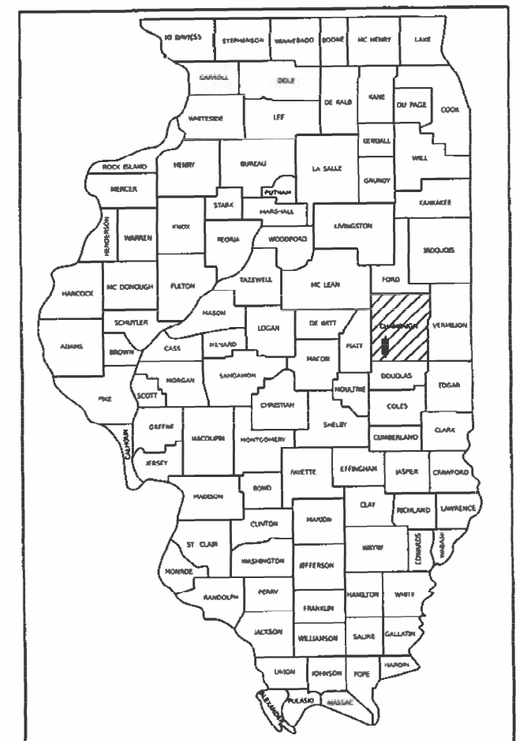

LOCATION OF SECTION INDICATED THUS:–

FUNCTIONAL CLASSIFICATION
INTERSTATE
2021 ADT = 25,800
P.V. = 66.76% S.U. = 3.78% M.U. = 29.46%

FULL SIZE PLANS HAVE BEEN PREPARED USING STANDARD ENGINEERING SCALES. REDUCED SIZED PLANS WILL NOT CONFORM TO STANDARD SCALES. IN MAKING MEASUREMENTS ON REDUCED PLANS, THE ABOVE SCALES MAY BE USED.

J.U.L.I.E.
JOINT UTILITY LOCATION INFORMATION FOR EXCAVATION
1–800–892–0123
OR 811

STATE OF ILLINOIS
DEPARTMENT OF TRANSPORTATION

SUBMITTED 3/24 2023
Kenneth A. Hartnett
REGIONAL ENGINEER
May 12, 2023
ENGINEER OF DESIGN AND ENVIRONMENT
May 12, 2023
Stephen M. Travia
DIRECTOR OF HIGHWAYS PROJECT IMPLEMENTATION

PROJECT ENGINEER JASON STULTS, P.E.
PROJECT MANAGER DAVID JAYME, P.E.

PRINTED BY THE AUTHORITY OF THE STATE OF ILLINOIS

CONTRACT NO. 70908

REV. 5/12/23 REV. 4/14/23

HIGHWAY STANDARDS

000001-08	STANDARD SYMBOLS, ABBREVIATIONS AND PATTERNS
001001-02	AREAS OF REINFORCEMENT BARS
001006	DECIMAL OF AN INCH AND OF A FOOT
280001-07	TEMPORARY EROSION CONTROL SYSTEMS
420001-10	PAVEMENT JOINTS
420401-13	PAVEMENT CONNECTOR (PCC) FOR BRIDGE APPROACH SLAB
482001-02	HMA SHOULDER ADJACENT TO FLEXIBLE PAVEMENT
515001-04	NAME PLATE FOR BRIDGES
542401-04	METAL FLARED END SECTION FOR PIPE CULVERTS
601001-05	PIPE UNDERDRAINS
601101-02	CONCRETE HEADWALL FOR PIPE UNDERDRAINS
610001-09	SHOULDER INLET WITH CURB
630001-12	STEEL PLATE BEAM GUARDRAIL
630301-09	SHOULDER WIDENING FOR TYPE 1 (SPECIAL) GUARDRAIL TERMINALS
631031-18	TRAFFIC BARRIER TERMINAL, TYPE 6
663001-02	SAND MODULE IMPACT ATTENUATORS
664001-02	CHAIN LINK FENCE
667101-02	PERMANENT SURVEY MARKERS
701101-05	OFF-RD OPERATIONS, MULTILANE, 15'(4.5M) TO 24"(600MM) FROM PAVEMENT EDGE
701106-02	OFF-RD OPERATIONS, MULTILANE, MORE THAN 15'(4.5M) AWAY
701400-11	APPROACH TO LANE CLOSURE, FREEWAY/EXPRESSWAY
701401-13	LANE CLOSURE, FREEWAY/EXPRESSWAY
701428-01	TRAFFIC CONTROL, SETUP AND REMOVAL, FREEWAY/EXPRESSWAY
701901-08	TRAFFIC CONTROL DEVICES
704001-08	TEMPORARY CONCRETE BARRIER
720001-01	SIGN PANEL MOUNTING DETAILS
725001-01	OBJECT AND TERMINAL MARKERS
782006-01	GUARDRAIL AND BARRIER WALL REFLECTOR MOUNTING DETAILS
701402-12	LANE CLOSURE, FREEWAY/EXPRESSWAY, WITH BARRIER

COMMITMENTS:

NONE.

DISTRICT GENERAL NOTES

GN-105.09A ALL ELEVATIONS SHOWN IN THE PLANS ARE BASED ON NORTH AMERICAN VERTICAL DATUM OF 1988 (NAVD 88).

GN-201 TREES THAT INTERFERE WITH THE CONSTRUCTION OPERATIONS SHALL BE REMOVED AS DIRECTED BY THE ENGINEER. ANY TREE DUE TO ITS LOCATION AND DEEMED SUITABLE FOR SAVING BY THE ENGINEER SHALL BE PROTECTED DURING CLEARING AND SUBSEQUENT CONSTRUCTION OPERATIONS.

GN-205 BENCHING PROCEDURES SHALL BE USED IN AREAS WHERE EXISTING EMBANKMENTS ARE WIDENED FOR THE PROPOSED PAVEMENT. STEPS SHALL BE CUT INTO THE EXISTING EMBANKMENT SLOPES AND SHALL HAVE THE FOLLOWING DIMENSIONS:
HORIZONTAL:
VERTICAL:

GN-501A THE EXISTING STRUCTURAL STEEL COATING CONTAINS LEAD. THE CONTRACTOR SHOULD FOLLOW THE GUIDE BRIDGE SPECIAL PROVISIONS FOR CONTAINMENT AND DISPOSAL OF LEAD PAINT CLEANING RESIDUES TO DEAL WITH THE PRESENCE OF LEAD ON THIS PROJECT.

GN-506 ALL FINAL SURFACES OF THE BEAMS SHALL BE PAINTED WITH LIGHT GREY (MUNSELL COLOR STANDARD – 10Y 7/1) EXCEPT THE EXTERIOR SURFACES OF THE EXTERIOR BEAMS WHICH SHALL BE PAINTED INSTERSTATE GREEN (MUNSELL COLOR STANDARD 7.5G 4/8).

GN-703A SHORT TERM PAVEMENT MARKING SHALL BE APPLIED TO THE PAVEMENT AFTER ANY OF THE FOLLOWING: COLD MILLING AND/OR PLACING BITUMINOUS MATERIALS (TACK COAT), LEVELING BINDER (MACHINE METHOD), BINDER AND SURFACE COURSES, SHORT TERM PAVEMENT MARKING PLACED ON THE SURFACE SHALL COINCIDE WITH THE FINAL PAVEMENT STRIPING. SHORT TERM PAVEMENT MARKING PLACED PRIOR TO THE SURFACE SHALL COINCIDE WITH THE EXISTING PAVEMENT MARKINGS. USE 4 FEET PER 40 FEET (OR 10% PER STATION).

GN-781 THE FINAL PAVEMENT MARKINGS SHALL BE IN PLACE PRIOR TO PLACING THE RAISED REFLECTIVE PAVEMENT MARKERS.

GN-Z0038 PERMANENT BENCHMARKS SHALL BE CONSTRUCTED AS DIRECTED BY THE ENGINEER. THE MARKERS SHALL BE LOCATED ON THE CORNER OF THE ABUTMENT WHERE THE ABUTMENT AND WINGWALL INTERSECTION. QUANTITY HAS BEEN INCLUDED IN THE PLANS FOR TWO (2) PERMANENT BENCHMARKS, ONE AT EACH END OF THE BRIDGE.

GN 406H MIXTURE REQUIREMENTS

THE FOLLOWING MIXTURE REQUIREMENTS ARE APPLICABLE FOR THIS PROJECT:

LOCATION(S):	CH-17	CH-17	CH-17	CH-17	I-57	I-57
MIXTURE USE(S):	Polymer Surface Mainline	Polymer Bind. Top 2-1/4" Mainline	Binder Bottom 3-34" Mainline / Shoulders	Surface Shoulders	Binder Shoulders	Surface Shoulders
BINDER GRADE (PG):	SBS PG 64-28	SBS PG 64-28	PG 64-22	PG 64-22	PG 64-22	PG 64-22
DESIGN AIR VOIDS:	4.0% @ Ndes=50	4.0% @ Ndes=50	4.0% @ Ndes=50	4.0% @ Ndes=50	4.0% @ Ndes=50	4.0% @ Ndes=50
MIXTURE COMPOSITION: (MIXTURE GRADATION)	IL-9.5	IL-9.0	IL-9.0	IL-9.5	IL-9.0	IL-9.5
FRICTION AGGREGATE:	MIXTURE "C"	N.A.	N.A.	MIXTURE "C"	N.A.	MIXTURE "C"
MIXTURE WEIGHT:	112 LB/SQ YD/IN	112 LB/SQ YD/IN	112 LB/SQ YD/IN	112 LB/SQ YD/IN	112 LB/SQ YD/IN	112 LB/SQ YD/IN
QUALITY MANAGEMENT PROGRAM:	QC/QA	QC/QA	QC/QA	QC/QA	QC/QA	QC/QA
SUBLOT SIZE:	3000	3000	3000	3000	3000	3000
MATERIAL TRANSFER DEVICE?	NO	NO	NO	NO	NO	NO

CODE NO.	ITEM	UNIT	TOTAL QUANTITY	FAI 57 CHAMPAIGN COUNTY 10% STATE 90% FEDERAL BRIDGE 0010 RURAL
20100110	TREE REMOVAL (6 TO 15 UNITS DIAMETER)	UNIT	85	85
20100210	TREE REMOVAL (OVER 15 UNITS DIAMETER)	UNIT	36	36
20200100	EARTH EXCAVATION	CU YD	246	246
20400800	FURNISHED EXCAVATION	CU YD	1,720	1,720
20600200	GRANULAR, EMBANKMENT, SPECIAL	CU YD	334	334
21101505	TOPSOIL EXCAVATION AND PLACEMENT	CU YD	717	717
21101615	TOPSOIL FURNISH AND PLACE, 4"	SQ YD	5,028	5,028
25000210	SEEDING, CLASS 2A	ACRE	1.5	1.5
25000400	NITROGEN FERTILIZER NUTRIENT	POUND	126	126
25000500	PHOSPHORUS FERTILIZER NUTRIENT	POUND	126	126
25000600	POTASSIUM FERTILIZER NUTRIENT	POUND	126	126
25100900	TURF REINFORCEMENT MAT	SQ YD	6,783	6,783
28000250	TEMPORARY EROSION CONTROL SEEDING	POUND	140	140
28000315	AGGREGATE DITCH CHECKS	TON	60	60

* = SPECIALTY ITEM

CODE NO.	ITEM	UNIT	TOTAL QUANTITY	FAI 57 CHAMPAIGN COUNTY 10% STATE 90% FEDERAL BRIDGE 0010 RURAL
28000400	PERIMETER EROSION BARRIER	FOOT	1,997	1,997
28000500	INLET AND PIPE PROTECTION	EACH	4	4
28100105	STONE RIPRAP, CLASS A3	SQ YD	48	48
28200200	FILTER FABRIC	SQ YD	48	48
31101000	SUBBASE GRANULAR MATERIAL, TYPE B	TON	188	188
40600275	BITUMINOUS MATERIALS (PRIME COAT)	POUND	4,341	4,341
40600290	BITUMINOUS MATERIALS (TACK COAT)	POUND	436	436
40600370	LONGITUDINAL JOINT SEALANT	FOOT	634	634
40600982	HOT-MIX ASPHALT SURFACE REMOVAL - BUTT JOINT	SQ YD	214	214
40603080	HOT-MIX ASPHALT BINDER COURSE, IL-19.0FG, N50	TON	301	301
40603230	POLYMERIZED HOT-MIX ASPHALT BINDER COURSE, IL-19.0, N50	TON	181	181
40604150	POLYMERIZED HOT-MIX ASPHALT SURFACE COURSE, IL-9.5, MIX "C", N50	TON	141	141
42000080	PAVEMENT CONNECTOR (PCC) FOR BRIDGE APPROACH SLAB	SQ YD	63	63
44000100	PAVEMENT REMOVAL	SQ YD	160	160

* = SPECIALTY ITEM

MODEL: SOQ Sheet 2
FILE NAME: P:\ph-1059.01 Phase II IL57 under CH17\0_IDOT\CAD_Sheets\D570908-sht-SOQ.dgn

Kaskaskia Engineering Group, LLC
PROFESSIONAL REGISTRATIONS
Illinois Professional Design Firm 184.004773
Professional Engineering Group 20-1040006
206 E. Main St., Suite 300
Belleville, IL 62220
618.233.5677 phone
618.233.5677 fax
www.kaskaskiaeng.com

USER NAME = jwarner	DESIGNED -	REVISED -	
	DRAWN -	REVISED -	
PLOT SCALE = 0.16666633 ' / in.	CHECKED -	REVISED -	
PLOT DATE = 3/24/2023	DATE -	REVISED -	

STATE OF ILLINOIS
DEPARTMENT OF TRANSPORTATION

SUMMARY OF QUANTITIES

SCALE: | SHEET 2 OF 7 SHEETS | STA. | TO STA.

F.A. I. RTE.	SECTION	COUNTY	TOTAL SHEETS	SHEET NO.
57	(10-30)BR	CHAMPAIGN	65	4
		CONTRACT NO. 70908		
		ILLINOIS	FED. AID PROJECT	

REV. 5/12/23

CODE NO.	ITEM	UNIT	TOTAL QUANTITY	FAI 57 CHAMPAIGN COUNTY 10% STATE 90% FEDERAL BRIDGE 0010 RURAL
44004250	PAVED SHOULDER REMOVAL	SQ YD	378	378
48101200	AGGREGATE SHOULDERS, TYPE B	TON	716	716
48203012	HOT-MIX ASPHALT SHOULDERS, 3 3/4"	SQ YD	390	390
48203045	HOT-MIX ASPHALT SHOULDERS, 12"	SQ YD	378	378
50100100	REMOVAL OF EXISTING STRUCTURES	EACH	1	1
50157300	PROTECTIVE SHIELD	SQ YD	338	338
50200100	STRUCTURE EXCAVATION	CU YD	270	270
50300225	CONCRETE STRUCTURES	CU YD	174.0	174.0
50300255	CONCRETE SUPERSTRUCTURE	CU YD	262.4	262.4
50300260	BRIDGE DECK GROOVING	SQ YD	783	783
50300300	PROTECTIVE COAT	SQ YD	1,053	1,053
50301350	CONCRETE SUPERSTRUCTURE (APPROACH SLAB)	CU YD	83.7	83.7
50500105	FURNISHING AND ERECTING STRUCTURAL STEEL	L SUM	1	1
50500505	STUD SHEAR CONNECTORS	EACH	2,484	2,484

* = SPECIALTY ITEM

CODE NO.	ITEM	UNIT	TOTAL QUANTITY	FAI 57 CHAMPAIGN COUNTY 10% STATE 90% FEDERAL BRIDGE 0010 RURAL
50800205	REINFORCEMENT BARS, EPOXY COATED	POUND	116,190	116,190
50800530	MECHANICAL SPLICERS	EACH	60	60
51100100	SLOPE WALL 4 INCH	SQ YD	319	319
51200959	FURNISHING METAL SHELL PILES 14" X 0.312"	FOOT	515	515
51202305	DRIVING PILES	FOOT	515	515
51203200	TEST PILE METAL SHELLS	EACH	2	2
51204650	PILE SHOES	EACH	12	12
51500100	NAME PLATES	EACH	1	1
52100010	ELASTOMERIC BEARING ASSEMBLY, TYPE I	EACH	6	6
52100520	ANCHOR BOLTS, 1"	EACH	36	36
54262712	METAL FLARED END SECTIONS 12"	EACH	4	4
58600101	GRANULAR BACKFILL FOR STRUCTURES	CU YD	124	124
59100100	GEOCOMPOSITE WALL DRAIN	SQ YD	58	58
60100945	PIPE DRAINS 12"	FOOT	185	185
60146304	PIPE UNDERDRAIN FOR STRUCTURES 4"	FOOT	128	128

* = SPECIALTY ITEM

MODEL: SOQ Sheet 4
FILE NAME: P:\ph-1059.01 Phase II IL57 under CH17\0_IDOT\CAD_Sheets\D570908-sht-SOQ.dgn

Kaskaskia Engineering Group, LLC
PROFESSIONAL REGISTRATIONS
Illinois Professional Design Firm 184.004773
Professional Engineering Group 20-3040006
2N E. Main St., Suite 300
Belleville, IL 62220
618.233.5677 phone
618.233.5677 fax
www.kaskaskiaeng.com

USER NAME = jwarner	DESIGNED -	REVISED -	
	DRAWN -	REVISED -	
PLOT SCALE = 0.16666633 ' / in.	CHECKED -	REVISED -	
PLOT DATE = 3/24/2023	DATE -	REVISED -	

STATE OF ILLINOIS
DEPARTMENT OF TRANSPORTATION

SUMMARY OF QUANTITIES

SCALE: | SHEET 4 OF 7 SHEETS | STA. | TO STA.

F.A. I. RTE.	SECTION	COUNTY	TOTAL SHEETS	SHEET NO.
57	(10-30)BR	CHAMPAIGN	65	6
		CONTRACT NO. 70908		
		ILLINOIS	FED. AID PROJECT	

REV. 5/12/23

	CODE NO.	ITEM	UNIT	TOTAL QUANTITY	FAI 57 CHAMPAIGN COUNTY 10% STATE 90% FEDERAL BRIDGE 0010 RURAL
	61000050	CONCRETE THRUST BLOCKS	EACH	4	4
	61000335	TYPE G INLET BOX, STANDARD 610001	EACH	4	4
*	63000001	STEEL PLATE BEAM GUARDRAIL, TYPE A, 6 FOOT POSTS	FOOT	375	375
*	63000003	STEEL PLATE BEAM GUARDRAIL, TYPE A, 9 FOOT POSTS	FOOT	2,625	2,625
*	63100045	TRAFFIC BARRIER TERMINAL, TYPE 2	EACH	1	1
*	63100085	TRAFFIC BARRIER TERMINAL, TYPE 6	EACH	4	4
*	63100167	TRAFFIC BARRIER TERMINAL, TYPE 1 (SPECIAL) TANGENT	EACH	5	5
	63200310	GUARDRAIL REMOVAL	FOOT	2,981	2,981
	64300450	IMPACT ATTENUATORS (NON-REDIRECTIVE), TEST LEVEL 3	EACH	2	2
	64301090	ATTENUATOR BASE	SQ YD	55	55
	66201120	CONCRETE SHOULDER CURB	FOOT	40	40
*	66400305	CHAIN LINK FENCE, 6'	FOOT	180	180
	67000500	ENGINEER'S FIELD OFFICE, TYPE B	CAL MO	12	12
	67100100	MOBILIZATION	L SUM	1	1

* = SPECIALTY ITEM

	CODE NO.	ITEM	UNIT	TOTAL QUANTITY	FAI 57 CHAMPAIGN COUNTY 10% STATE 90% FEDERAL BRIDGE 0010 RURAL
	70107025	CHANGEABLE MESSAGE SIGN	CAL DA	14	14
	70200100	NIGHTTIME WORK ZONE LIGHTING	L SUM	1	1
	70300100	SHORT-TERM PAVEMENT MARKING	FOOT	228	228
	70300150	SHORT-TERM PAVEMENT MARKING REMOVAL	SQ FT	76	76
	70400100	TEMPORARY CONCRETE BARRIER	FOOT	550	550
	70400200	RELOCATE TEMPORARY CONCRETE BARRIER	FOOT	550	550
	70600250	IMPACT ATTENUATORS TEMPORARY (NON-REDIRECTIVE), TEST LEVEL 3	EACH	2	2
	70600251	IMPACT ATTENUATORS, TEMPORARY (NON-REDIRECTIVE, NARROW), TEST LEVEL 3	EACH	2	2
*	72501000	TERMINAL MARKER - DIRECT APPLIED	EACH	5	5
*	78001110	PAINT PAVEMENT MARKING - LINE 4"	FOOT	3,580	3,580
*	78100100	RAISED REFLECTIVE PAVEMENT MARKER	EACH	11	11
*	78200005	GUARDRAIL REFLECTORS, TYPE A	EACH	38	38
*	78200011	BARRIER WALL REFLECTORS, TYPE C	EACH	50	50
	78300200	RAISED REFLECTIVE PAVEMENT MARKER REMOVAL	FOOT	11	11

* = SPECIALTY ITEM

MODEL: SOQ Sheet 6
FILE NAME: P:\ds-1059.01 Phase II IL57 under CH17\0_IDOT\CAD_Sheets\D579308-sht-SOQ.dgn

Kaskaskia Engineering Group, LLC
PROFESSIONAL REGISTRATIONS
Illinois Professional Design Firm 184.004773
Professional Engineering Group 20-1040086
LICENSE NO.
209 E. Main St., Suite 300
Belleville, IL 62220
618.233.5677 phone
618.233.5677 fax
www.kaskaskiaeng.com

USER NAME = jwarner	DESIGNED -	REVISED -	
	DRAWN -	REVISED -	
PLOT SCALE = 0.16666633 ' / in.	CHECKED -	REVISED -	
PLOT DATE = 3/24/2023	DATE -	REVISED -	

STATE OF ILLINOIS
DEPARTMENT OF TRANSPORTATION

SUMMARY OF QUANTITIES

SCALE: | SHEET 6 OF 7 SHEETS | STA. | TO STA.

F.A. I. RTE.	SECTION	COUNTY	TOTAL SHEETS	SHEET NO.
57	(10-30)BR	CHAMPAIGN	65	8
		CONTRACT NO. 70908		
		ILLINOIS	FED. AID PROJECT	

FAI 57 CHAMPAIGN COUNTY
10% STATE 90% FEDERAL
BRIDGE
0010
RURAL

	CODE NO.	ITEM	UNIT	TOTAL QUANTITY	
	X6431110	REMOVE ATTENUATOR BASE	EACH	2	2
	X6431120	REMOVAL IMPACT ATTENUATOR SAND MODULE	EACH	2	2
	X7010216	TRAFFIC CONTROL AND PROTECTION, (SPECIAL)	L SUM	1	1
	Z0004638	PAVEMENT BREAKING	SQ YD	870	870
	Z0013798	CONSTRUCTION LAYOUT	L SUM	1	1
	Z0022800	FENCE REMOVAL	FOOT	180	180
Ø	Z0076600	TRAINEES	HOUR	1,000	1,000
Ø	Z0076604	TRAINEES - TRAINING PROGRAM GRADUATE	HOUR	1,000	1,000

* = SPECIALTY ITEM Ø 0042

MODEL: SOQ Sheet 7
FILE NAME: P:\20-1055.01 Phase II IL57 under CH170_IDOT\CAD_Sheets\D570908-sht-SOQ.dgn

Kaskaskia Engineering Group, LLC
PROFESSIONAL DESIGN FIRM
Illinois Professional Design Firm
Professional Engineering Group
209 E. Main St., Suite 300
Belleville, IL 62220
618.233.5672 phone
618.233.5675 fax
www.kaskaskiaeng.com
LICENSE NO.
184.004775
20-5585586

USER NAME = jwarner	DESIGNED -	REVISED -
	DRAWN -	REVISED -
PLOT SCALE = 0.16666633 ' / in.	CHECKED -	REVISED -
PLOT DATE = 3/24/2023	DATE -	REVISED -

STATE OF ILLINOIS
DEPARTMENT OF TRANSPORTATION

SUMMARY OF QUANTITIES

SCALE: SHEET 7 OF 7 SHEETS STA. TO STA.

F.A.I. RTE.	SECTION	COUNTY	TOTAL SHEETS	SHEET NO.
57	(10-30)BR	CHAMPAIGN	65	9
		CONTRACT NO. 70908		
		ILLINOIS	FED. AID PROJECT	

REV. 4/11/23

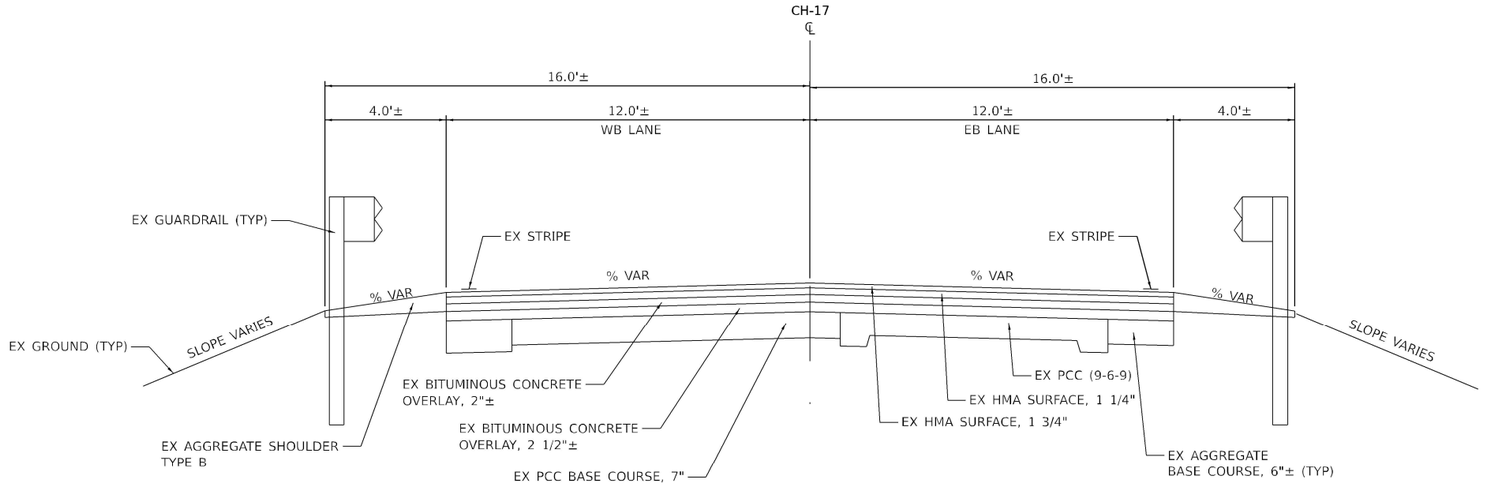

EXISTING TYPICAL SECTION

CH-17 STA 25+62.50 TO STA 34+37.50
EXISTING SN 010-0124 STA 28+79.86 TO 31+01.36

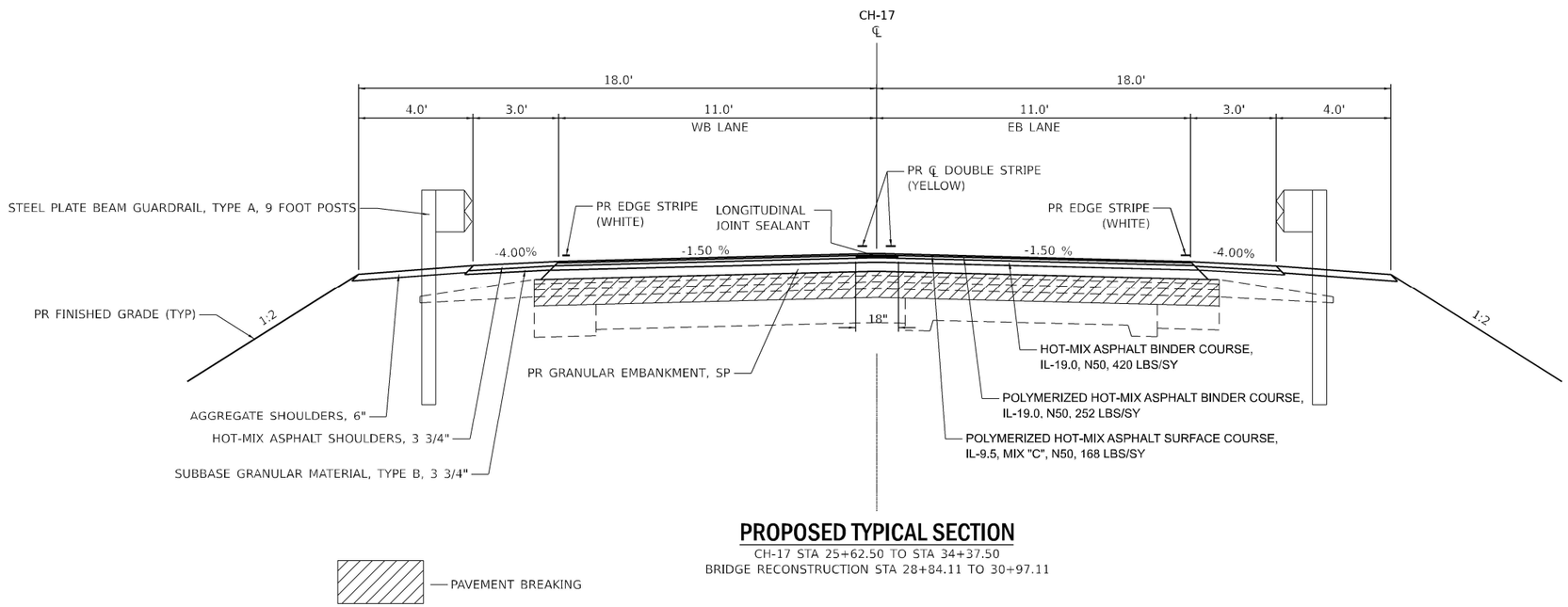

PROPOSED TYPICAL SECTION

CH-17 STA 25+62.50 TO STA 34+37.50
BRIDGE RECONSTRUCTION STA 28+84.11 TO 30+97.11

MODEL: Unitled-4 [Sheet]
FILE NAME: P120-1055-01 Phase II I-57 under CH17IC IDOT\CAD Sheets\D570908-sht-typicals_01.dgn

Kaskaskia Engineering Group, LLC — 477 South Third Street Suite 200, Carterville, Illinois 62918, 618.532.9187 phone, www.kaskaskiaeng.com; PROFESSIONAL REGISTRATIONS: Illinois Professional Design Firm 184.001475; Professional Engineering Group 20.1000556	USER NAME = hpapproth	DESIGNED -	REVISED -	STATE OF ILLINOIS DEPARTMENT OF TRANSPORTATION	TYPICAL SECTIONS – CH 17	F.A.I. RTE.	SECTION	COUNTY	TOTAL SHEETS / SHEET NO.
		DRAWN -	REVISED -			57	(10-31HB)BR	CHAMPAIGN	65 / 10
	PLOT SCALE = 99.99980000 ' / in.	CHECKED -	REVISED -					CONTRACT NO. 70908	
	PLOT DATE = 3/22/2023	DATE -	REVISED -		SCALE: / SHEET 1 OF 2 SHEETS / STA. / TO STA.		ILLINOIS	FED. AID PROJECT	

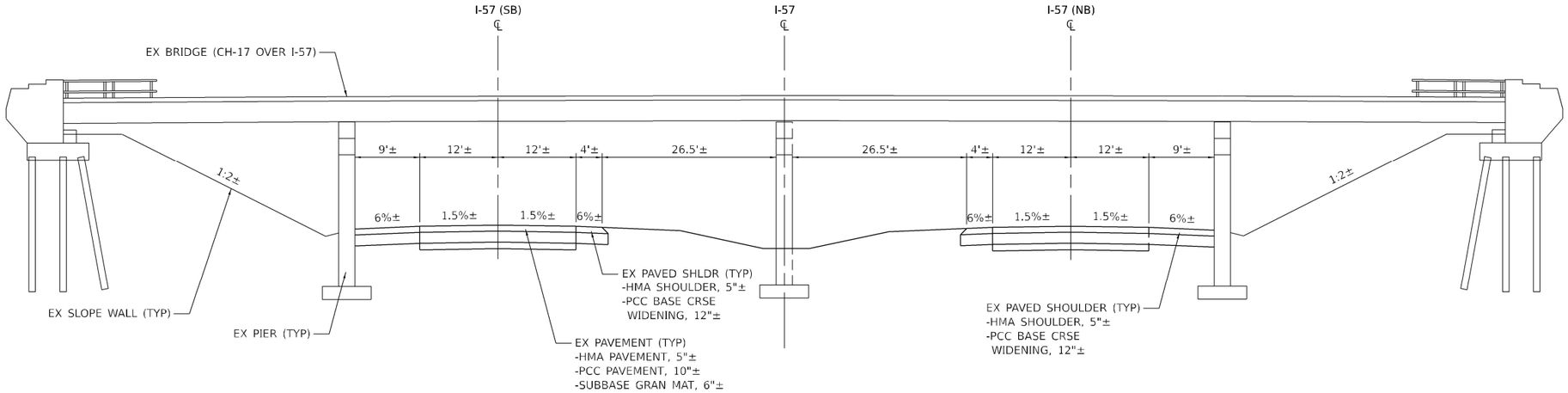

EXISTING TYPICAL SECTION

AT BRIDGE
I-57 STA 367+42.21 TO STA 367+75.56

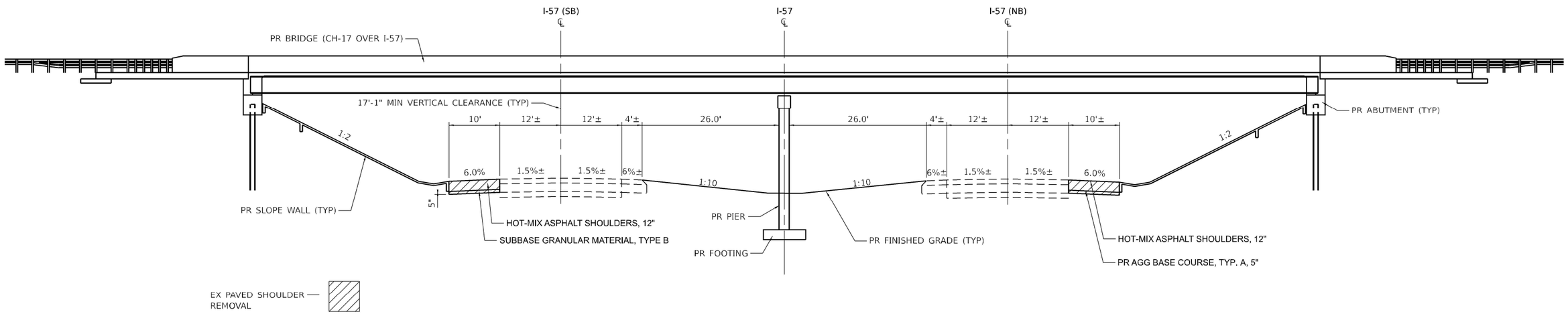

PROPOSED TYPICAL SECTION

AT BRIDGE
I-57 STA 367+42.21 TO STA 367+75.56

MODEL: Typical2 [Sheet]
FILE NAME: P:\20-1055.01 Phase II IL57 under CH17_IDOT\CAD Sheets\D570908-sht-typicals_02.dgn

Kaskaskia Engineering Group, LLC — 477 South Third Street Suite 200, Geneva, Illinois 60134, 630.232.8107 phone, www.kaskaskiieng.com; PROFESSIONAL REGISTRATIONS: Illinois Professional Design Firm 184.004473; Professional Engineering Group 20-0000566; LICENSE NO.	USER NAME = hpapproth	DESIGNED -	REVISED -	STATE OF ILLINOIS DEPARTMENT OF TRANSPORTATION	TYPICAL SECTIONS – I–57	F.A.P RTE. 57	SECTION (10-31HB)BR	COUNTY CHAMPAIGN	TOTAL SHEETS 65	SHEET NO. 11
		DRAWN -	REVISED -					CONTRACT NO. 70908		
	PLOT SCALE = 19.99996000 ' / in.	CHECKED -	REVISED -							
	PLOT DATE = 3/22/2023	DATE -	REVISED -		SCALE: SHEET 2 OF 2 SHEETS STA. TO STA.		ILLINOIS	FED. AID PROJECT		

TREE REMOVAL SCHEDULE

LOCATION				TREE REMOVAL (6 TO 15 UNITS DIAMETER)	TREE REMOVAL (OVER 15 UNITS IN DIAMETER)
				20100110	20100210
ROAD NAME				(UNIT)	(UNIT)
STATION	TO	OFFSET	LT/RT		
CH-17					
027+91.0		45.0'	LT	7	
028+61.3		34.3'	LT		20
031+16.0		44.8'	RT	14	
031+28.4		44.8'	LT		16
031+36.4		36.7'	RT	8	
031+40.5		47.1'	LT	14	
031+70.7		47.2'	RT	8	
031+71.4		38.3'	RT	10	
031+84.0		43.8'	RT	12	
031+95.2		39.4'	RT	12	
			TOTAL:	85	36
			PAY TOTAL:	85	36

EARTHWORK SCHEDULE

LOCATION			NOTES	EARTH EXCAVATION	FOR INFORMATION ONLY			GRANULAR EMBANKMENT, SPECIAL	TOPSOIL EXCAVATION AND PLACEMENT	TOPSOIL FURNISH AND PLACE, 4"
					SHRINKAGE OF EARTH EXCAVATION	EMBANKMENT	EARTHWORK BALANCE WASTE STORAGE			
				20200100			20400800	20600200	21101505	211061615
ROAD NAME				(CU YD)	(CU YD)	(CU YD)	(CU YD)	(CU YD)	(CU YD)	(SQ YD)
STATION	TO	STATION								
CH-17										
025+62.5		028+84.1		116.7	87.55	991.78	-904.2	130.5	308.8	1808.8
030+97.1		034+37.5		69.6	52.21	910.6	-858.4	202.9	289.2	2145.8
MEDIAN				31.7	23.78	1.42	22.4		118.8	1072.5
SB I-57 GUARDRAIL				27.8	20.83		20.8			
			TOTAL:	245.8	184.37	1903.8	-1719.4	333.4	716.8	5027.1
			PAY TOTAL:	246	185	1904	-1720	334	717	5028

DITCH CHECK SCHEDULE

LOCATION			AGGREGATE DITCH CHECK
			28000315
ROAD NAME			(EACH)
STATION	TO	STATION	
CH-17			
025+62.5		034+37.5	6
		TOTAL:	6
		PAY TOTAL:	6

EROSION SCHEDULE

LOCATION		OFFSET	TEMPORARY EROSION CONTROL SEEDING	PERIMETER EROSION BARRIER	INLET AND PIPE PROTECTION	STONE RIPRAP CLASS A3	FILTER FABRIC
			28000250	28000400	28000500	28100105	28200200
			(POUND)	(FOOT)	(EACH)	(SQ YD)	(SQ YD)
STATION	TO STATION						
CH-17							
25+63	028+84.0	LT	32.0	418.0	1.0	12.0	12.0
		RT	20.0	390.0	1.0	12.0	12.0
28+84	029+25.0	LT	7.0	68.0			
		RT	6.0	80.0			
29+67	030+14.0	LT	8.0	49.0			
		RT	8.0	47.0			
30+56	030+97.0	LT	6.0	80.0			
		RT	6.0	61.0			
30+97	034+37.5	LT	23.0	394.0	1.0	12.0	12.0
		RT	24.0	410.0	1.0	12.0	12.0
TOTAL			140.0	1997.0	4.0	48.0	48.0
ADJUSTED TOTAL			140	1997	4	48	48

DRAINAGE SCHEDULE

LOCATION		METAL FLARED END SECTIONS, 12"	PIPE DRAINS, 12"	CONCRETE THRUST BLOCKS	TYPE G INLET BOX, STANDARD 610001	CONCRETE SHOULDER CURB
		54262712	60100945	61000050	61000335	66201120
		EACH	FOOT	EACH	EACH	FOOT
STATION	OFFSET					
CH-17						
28+50	LT	1.0	56.5	1.0	1.0	10.0
28+50	RT	1.0	31.5	1.0	1.0	10.0
31+31	LT	1.0	46.5	1.0	1.0	10.0
31+31	RT	1.0	50.5	1.0	1.0	10.0
TOTAL		4.0	185.0	4.0	4.0	40.0
ADJUSTED TOTAL		4	185	4	4	40

SEEDING SCHEDULE

LOCATION			SEEDING, CLASS 2A	NITROGEN FERTILIZER NUTRIENT	PHOSPHORUS FERTILIZER NUTRIENT	POTASSIUM FERTILIZER NUTRIENT	TURF REINFORCEMENT MAT
			25000210	25000400	25000500	25000600	25100900
ROAD NAME			(ACRE)	(POUND)	(POUND)	(POUND)	(SQ YD)
STATION	TO	STATION					
CH-17							
25+63		028+84.0	0.3	28.7	28.7	28.7	1545.9
			0.2	17.6	17.6	17.6	946.1
28+84		029+25.0	0.1	6.3	6.3	6.3	336.8
			0.1	5.8	5.8	5.8	314.4
29+67		030+14.0	0.1	7.6	7.6	7.6	408.0
			0.1	7.1	7.1	7.1	379.2
30+56		030+97.0	0.1	5.8	5.8	5.8	312.7
			0.1	5.3	5.3	5.3	286.4
30+97		034+37.5	0.2	20.6	20.6	20.6	1106.8
			0.2	21.3	21.3	21.3	1145.9
		TOTAL:	1.4	126.1	126.1	126.1	6782.2
		PAY TOTAL:	1.5	126.0	126.0	126.0	6783.0

MODEL: Schedule1 [Sheet]
FILE NAME: P:\00-1055.01 Phase II ILS7 under CH176\IDOT\CAD Sheets\D570908-sht-schedules_01.dgn

Kaskaskia Engineering Group, LLC
477 South Third Street Suite 200
Geneva, Illinois 60134
630.232.9157 phone
www.kaskaskiaeng.com
PROFESSIONAL REGISTRATIONS: LICENSE NO.
Illinois Professional Design Firm 184.001772
Professional Engineering Group 20-5000250

USER NAME = hpapproth	DESIGNED -	REVISED -	
	DRAWN -	REVISED -	
PLOT SCALE = 0.16666633 ' / in.	CHECKED -	REVISED -	
PLOT DATE = 3/22/2023	DATE -	REVISED -	

STATE OF ILLINOIS
DEPARTMENT OF TRANSPORTATION

SCHEDULES

SCALE: SHEET OF SHEETS STA. TO STA.

F.A.P RTE.	SECTION	COUNTY	TOTAL SHEETS	SHEET NO.
57	(10-31HB)BR	CHAMPAIGN	65	12
		CONTRACT NO. 70908		
		ILLINOIS	FED. AID PROJECT	

STAGING SCHEDULE

LOCATION	TEMPORARY CONCRETE BARRIER	IMPACT ATTENTUATORS, TEMPORARY (NON-REDIRECTIVE), TEST LVEL 3	BARRIER WALL REFLECTORS, TYPE C	TRAFFIC CONTROL AND PROTECTION, (SPECIAL)
	70400100	70600250	78200011	X7010216
	FOOT	EACH	EACH	L SUM
STATION TO STATION				
IL 57				
366+76 368+47	550.0	2.0	50.0	1.0
TOTAL	550.0	2.0	50.0	1.0
ADJUSTED TOTAL	550	2	50	1

GUARDRAIL SCHEDULE

LOCATION				NOTES	GUARDRAIL REMOVAL	STEEL PLATE BEAM GUARDRAIL,TYPE A, 6 FOOT POSTS	STEEL PLATE BEAM GUARDRAIL,TYPE A, 9 FOOT POSTS	TRAFFIC BARRIER TERMINAL, TYPE 2	TRAFFIC BARRIER TERMINAL, TYPE 6	TRAFFIC BARRIER TERMINAL, TYPE 1 (SPECIAL) TANGENT	TERMINAL MARKER - DIRECT APPLIED	GUARDRAIL REFLECTORS, TYPE A
ROAD NAME					63200310	63000001	63000003	63100045	63100085	63100167	72501000	78200005
STATION	TO	STATION	LT/RT		(FOOT)	(FOOT)	(FOOT)	EACH	EACH	EACH	EACH	(EACH)
CH-17												
22+50		36+50	LT		1140		1288		2	2	2	17
22+50		36+50	RT		1220		1338		2	2	2	16
I-57												
364+50		372+28	LT		312	375		1		1	1	5
367+50		370+75	RT		309							
				TOTAL:	2981	375	2625	1	4	5	5	37.5
				PAY TOTAL:	2981	375	2625	1	4	5	5	38

REMOVAL SCHEDULE

LOCATION		HOT-MIX ASPHALT SURFACE REMOVAL - BUTT JOINT	PAVEMENT REMOVAL	PAVED SHOULDER REMOVAL	REMOVE IMPACT ATTENUATOR SAND MODULE	REMOVE ATTENUATOR BASE	PAVEMENT BREAKING
		40600982	44000100	44004250	X6431120	X6431110	Z0004638
		(SQ YD)	(SQ YD)	(SQ YD)	(EACH)	(EACH)	(SQ YD)
STATION	STATION						
CH-17							
25+53	28+85	106.7	80.0				370.7
28+85	31+26						
31+26	34+38	106.7	80.0				498.7
IL 57							
366+76	368+47			377.8	2.0	2.0	
TOTAL		213.4	160.0	377.8	2.0	2.0	869.3
ADJUSTED TOTAL		214	160	378	2	2	870

IMPACT ATTENUATOR SCHEDULE

LOCATION			IMPACT ATTENUATORS (NON-REDIRECTIVE), TEST LEVEL 3	ATTENUATOR BASE
			64300450	64301090
			(EACH)	(SQ YD)
STATION	TO	STATION		
IL 57				
366+76		368+47	2	54.6
		TOTAL:	2	55
		PAY TOTAL:	2	55

PAVEMENT MARKING SCHEDULE

LOCATION			PAINT PAVEMENT MARKING - LINE 4"	SHORT-TERM PAVEMENT MARKING (1 LIFT) (WHITE)	SHORT-TERM PAVEMENT MARKING (1 LIFT) (YELLOW)	SHORT-TERM PAVEMENT MARKING REMOVAL (1 LIFT)	RAISED REFLECTIVE PAVEMENT MARKER
			78001110	70300100	70300100	70300150	78100100
ROAD NAME			(FOOT)	(FOOT)	(FOOT)	(SQ FT)	(EACH)
STATION	TO	STATION					
CH-17							
25+63		34+38	3580	140	87.5	75.8	10.9
		TOTAL:	3580	140	87.5	75.8	10.9
		PAY TOTAL:	3580	228		76	11

FENCE SCHEDULE

LOCATION			FENCE REMOVAL	CHAIN LINK FENCE 6'
			Z0022800	66400305
ROAD NAME			(FOOT)	(FOOT)
STATION	TO	STATION		
CH-17				
25+63		28+85	90.7	90.7
31+26		34+38	89.2	89.2
		TOTAL:	179.8	179.8
		PAY TOTAL:	180	180

PAVING SCHEDULE

LOCATION		SUBBASE GRANULAR MATERIAL, TYPE B	BITUMINOUS MATERIALS (PRIME COAT)	BITUMINOUS MATERIALS (TACK COAT)	LONGITUDINAL JOINT SEALANT	HOT-MIX ASPHALT BINDER COURSE, IL-9.0FG, N50	POLYMERIZED HOT-MIX ASPHALT BINDER COURSE, IL-9.0, N50	POLYMERIZED HOT-MIX ASPHALT SURFACE COURSE, IL-9.5, MIX "C",	PAVEMENT CONNECTOR (PCC) FOR BRIDGE APPROACH SLAB	AGGREGATE SHOULDERS, TYPE B	HOT-MIX ASPHALT SHOULDERS, 3 3/4"	HOT-MIX ASPHALT SHOULDERS, 12"
		3110100	40600275	40600290	40600370	40603080	40603230	40604150	42000080	48101200	48203012	48203045
		(TON)	(POUND)	(POUND)	(FOOT)	(TON)	(TON)	(TON)	(SQ YD)	(TON)	(SQ YD)	(SQ YD)
STATION TO STATION												
CH-17												
20+38	28+85	40.0	1775.0	178.0	322.6	146.0	88.0	72.0	31.1	319.0	188.4	
28+85	30+97											
30+97	38+56	42.0	1713.0	172.0	311.4	155.0	93.0	69.0	31.1	277.3	200.9	
IL 57												
366+76	372+28	106.0	853.0	86.0						119.1		377.8
TOTAL		188.0	4341.0	436.0	634.0	301.0	181.0	141.0	62.2	715.4	389.3	377.8
ADJUSTED TOTAL		188	4341	436	634	301	181	141	63	716	390	378

MODEL: Schedule2 [Sheet]
FILE NAME: P120-109S.01 Phase II IL57 under CH17(C IDOT/CAD Sheets\D570908-sht-scnedules-02.dgn

Kaskaskia Engineering Group, LLC
477 South Third Street Suite 200 Geneva, Illinois 60134
630.232.9557 phone
www.kaskaskiaeng.com
PROFESSIONAL REGISTRATIONS: Illinois Professional Design Firm 184.001772; Professional Engineering Group 20-5008536

USER NAME = jwarner	DESIGNED -	REVISED -	
	DRAWN -	REVISED -	
PLOT SCALE = 0.16666633 ' / in.	CHECKED -	REVISED -	
PLOT DATE = 5/4/2023	DATE -	REVISED -	

STATE OF ILLINOIS
DEPARTMENT OF TRANSPORTATION

SCHEDULES

SCALE: SHEET OF SHEETS STA. TO STA.

F.A.P RTE.	SECTION	COUNTY	TOTAL SHEETS	SHEET NO.
57	(10-31HB)BR	CHAMPAIGN	65	13
		CONTRACT NO. 70908		
	ILLINOIS	FED. AID PROJECT		

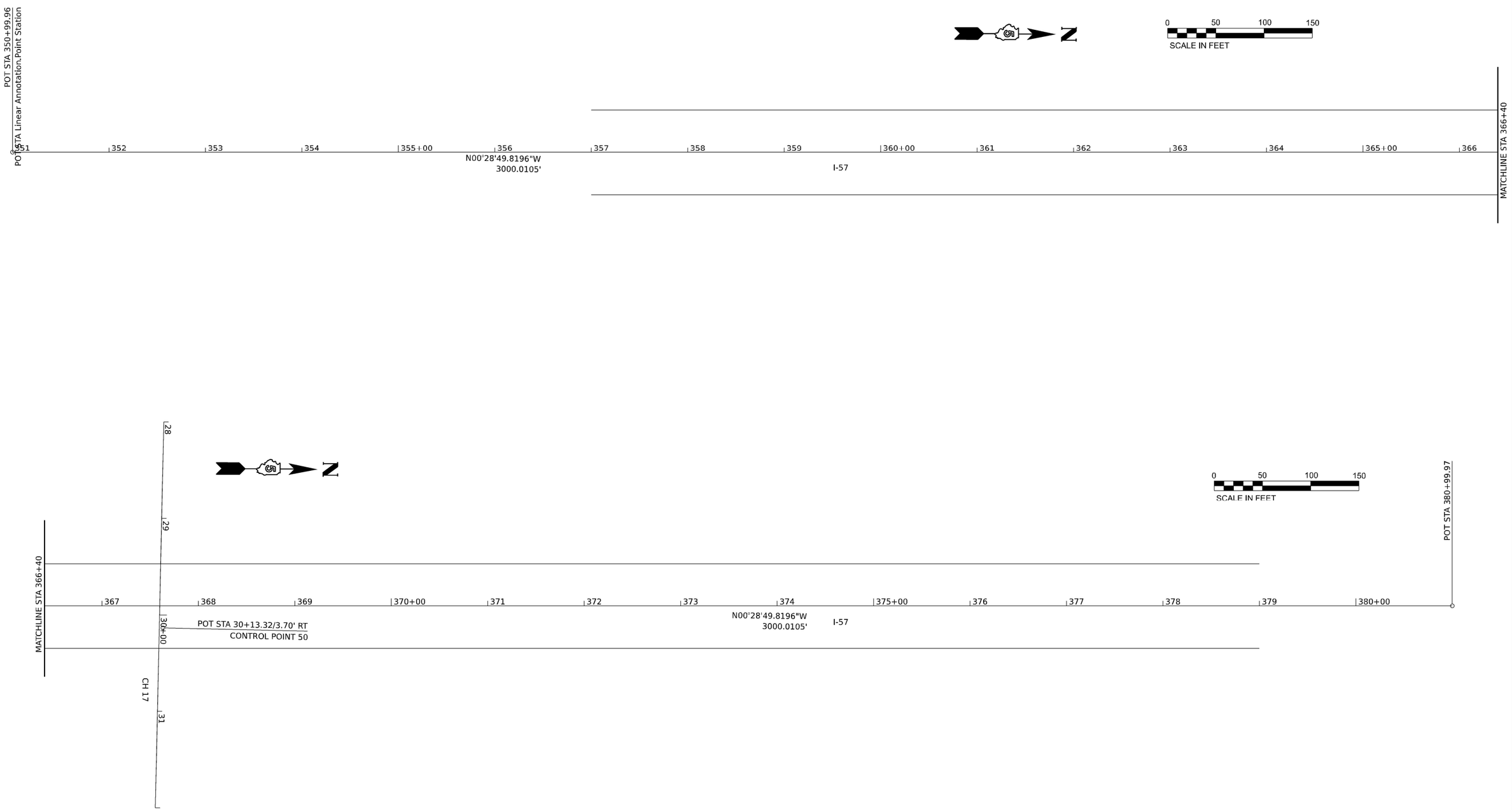

MODEL: I58 - Double57
FILE NAME: P:\20-1059.01 Phase II IL57 under CH17\0_IDOT\CAD_Sheets\D570908-sht-I57alignment.dgn

Kaskaskia Engineering Group, LLC
289 E. Main St., Suite 300
Belleville, Illinois 62220
618.233.3877 phone
618.233.3877 fax
www.kaskaskiaeng.com
PROFESSIONAL REGISTRATIONS
Illinois Professional Design Firm 184.001773
Professional Engineering Group 20-5080556
LICENSE INFO.

USER NAME = hpapproth	DESIGNED -	REVISED -	
	DRAWN -	REVISED -	
PLOT SCALE = 0.16666633 ' / in.	CHECKED -	REVISED -	
PLOT DATE = 3/22/2023	DATE -	REVISED -	

STATE OF ILLINOIS
DEPARTMENT OF TRANSPORTATION

ALIGNMENT–I57

SCALE: 1"=50' | SHEET 1 OF 1 SHEETS | STA. | TO STA.

F.A.I. RTE.	SECTION	COUNTY	TOTAL SHEETS	SHEET NO.
57	(10-31HB)BR	CHAMPAIGN	65	14
		CONTRACT NO. 70908		
	ILLINOIS	FED. AID PROJECT		

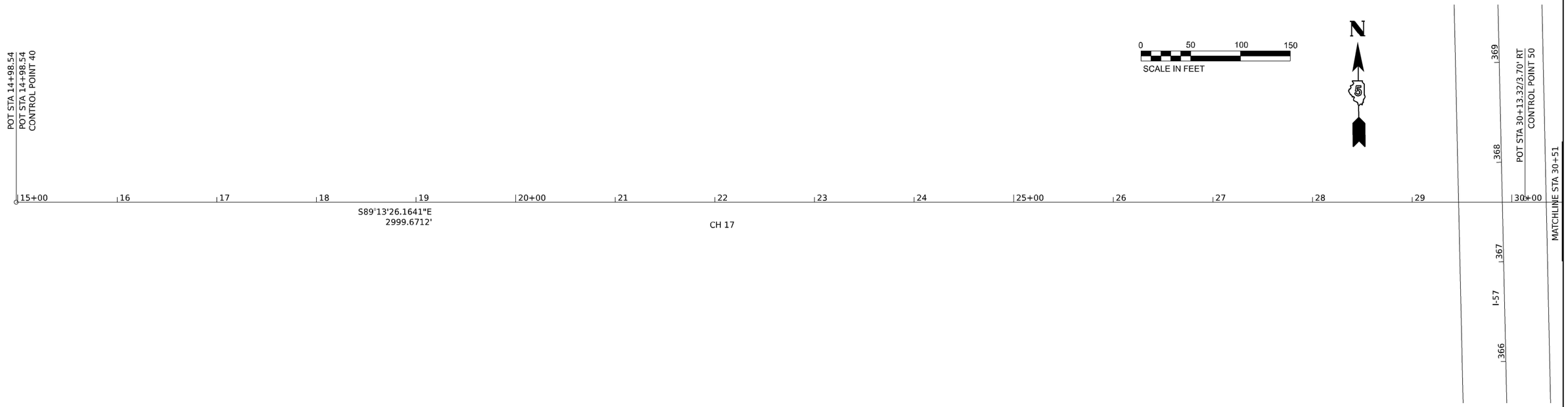

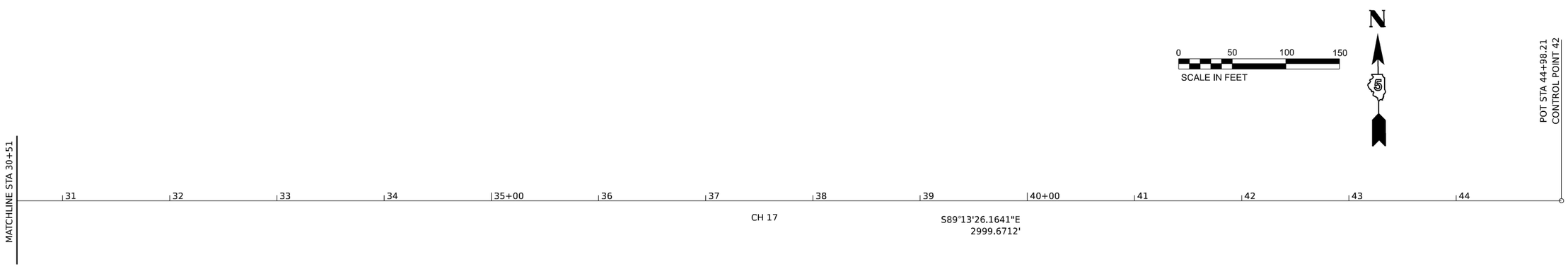

MODEL: ExBL-2 - Double17-1
FILE NAME: P:\pb-1059\91 Phase II IL57 under CH17\0_IDOT\CAD_Sheets\D570908-sht-CH17alignment.dgn

Kaskaskia Engineering Group, LLC
PROFESSIONAL DESIGN FIRMS
Illinois Professional Design Firm
Professional Engineering Group
LICENSED
184-001719
20-586581
200 E. Main St., Suite 100
Belleville, Illinois 62220
Phone: 618.233.8276
618.233.8277 fax
www.kaskaskiieng.com

USER NAME = hpapproth	DESIGNED -	REVISED -	
	DRAWN -	REVISED -	
PLOT SCALE = 0.16666633 ' / in.	CHECKED -	REVISED -	
PLOT DATE = 3/22/2023	DATE -	REVISED -	

STATE OF ILLINOIS
DEPARTMENT OF TRANSPORTATION

ALIGNMENT–CH17

SCALE: 1"=50' | SHEET 1 OF 1 SHEETS | STA. | TO STA.

F.A.I. RTE.	SECTION	COUNTY	TOTAL SHEETS	SHEET NO.
57	(10-31HB)BR	CHAMPAIGN	65	15
		CONTRACT NO. 70908		
	ILLINOIS	FED. AID PROJECT		

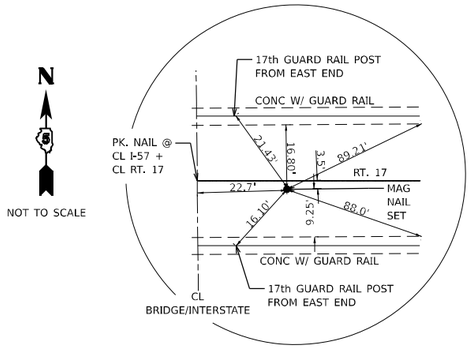

MONUMENT TIE #4

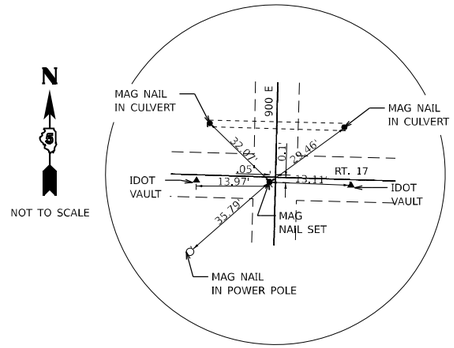

MONUMENT TIE #5

BENCHMARKS

BM #4903-2 SAID MARK IS A CHISELED SQUARE LOCATED ON THE TOPE OF THE SE WING OF STR 010-0124 OVER I-57 1.75 EAST OF SADORUS. ELEV. 711.038

BM #4903-3 SAID MARK IS A CHISELED SQUARE LOCATED ON THE TOP OF THE SW WING OF STR 010-0124 OVER I-57 1.75 EAST OF SADORUS. ELEV. 710.845

CH 17 ALIGNMENT					
POINT	DESC.	NORTHING	EASTING	STATION	CODE
40	IP/VAULT	1201962.783	991141.351	14+98.54	POT
42	IP/VAULT	1201922.154	994140.747	44.98.21	POT
50	MAG NAIL	1201938.567	992655.944	30+13.32/3.70' RT	SECTION CORNER

CENTERLINE POINTS

POINT NUMBER	NORTHING	EASTING	STATION	OFFSET	CODE	DESCRIPTION	EXISTING
CH 17							
40	1201962.783	991141.351	14+98.54	0.00	818	PERM	IRON PIN
41	1201942.574	992633.280	29+90.61	0.00	803	BASE	
42	1201922.154	994140.747	44+98.21	0.00	818	PERM	IRON PIN
I-57							
31	1200282.624	992647.201	350+99.96	0.000	818	PERM	
32	1201082.699	992640.455	359+00.06	-0.036	818	PERM	
33	1201882.698	992633.685	367+00.09	-0.097	818	PERM	
34	1202582.625	992627.850	374+00.04	-0.062	818	PERM	
35	1203282.529	992622.042	380+99.97	0.000	818	PERM	
41	1201942.574	992633.280	367+59.97	0.000		BASE	

MODEL: Alignment3 [Sheet]
FILE NAME: P:\20-1052.01 Phase II IL57 under CH17\3_IDOT\CAD_Sheets\0576096-ehk-dlgn_02.dgn

USER NAME = hpapproth	DESIGNED -	REVISED -	
	DRAWN -	REVISED -	
PLOT SCALE = 0.16666633 ' / in.	CHECKED -	REVISED -	
PLOT DATE = 3/22/2023	DATE -	REVISED -	

STATE OF ILLINOIS
DEPARTMENT OF TRANSPORTATION

TIES AND BENCHMARKS

SCALE: SHEET OF SHEETS STA. TO STA.

F.A.P RTE.	SECTION	COUNTY	TOTAL SHEETS	SHEET NO.
57	(10-31HB) BR	CHAMPAIGN	65	16
		CONTRACT NO.		
	ILLINOIS	FED. AID PROJECT		

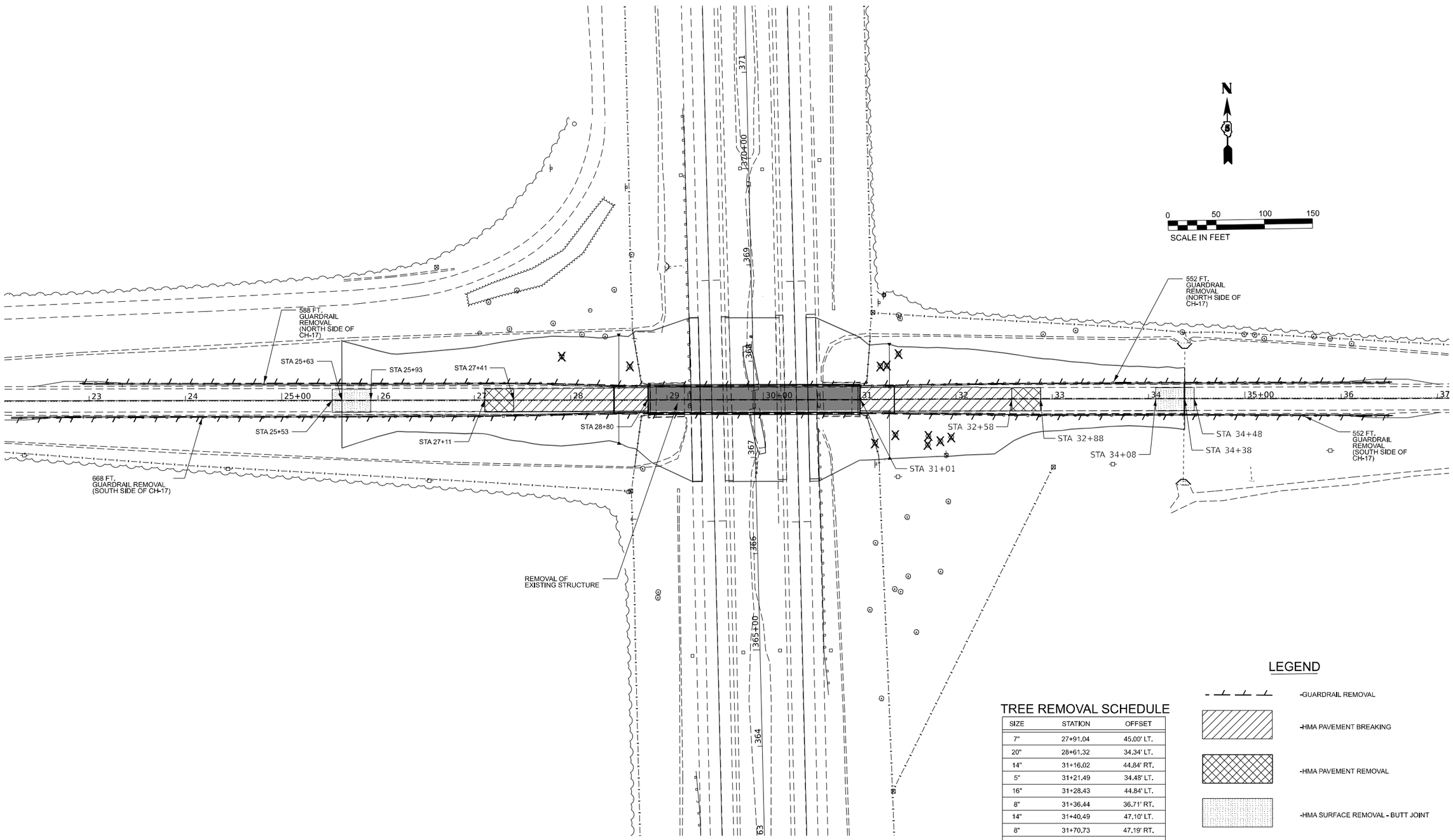

TREE REMOVAL SCHEDULE

SIZE	STATION	OFFSET
7"	27+91.04	45.00' LT.
20"	28+61.32	34.34' LT.
14"	31+16.02	44.84' RT.
5"	31+21.49	34.48' LT.
16"	31+28.43	44.84' LT.
8"	31+36.44	36.71' RT.
14"	31+40.49	47.10' LT.
8"	31+70.73	47.19' RT.
10"	31+71.43	38.34' RT.
12"	31+84.01	43.78' RT.
12"	31+95.24	39.44' RT.

LEGEND

- -GUARDRAIL REMOVAL
- -HMA PAVEMENT BREAKING
- -HMA PAVEMENT REMOVAL
- -HMA SURFACE REMOVAL - BUTT JOINT
- -REMOVAL OF EXISTING STRUCTURE

MODEL: Unnamed Plan - Plan 1
FILE NAME: P:\0k-1052.01 Phase II IL57 under CH17\0_IDOT\CAD_Sheets\0576908-setkeremoval17.dgn

USER NAME = hpapproth	DESIGNED -	REVISED -	
	DRAWN -	REVISED -	
PLOT SCALE = 0.16666633 ' / in.	CHECKED -	REVISED -	
PLOT DATE = 3/22/2023	DATE -	REVISED -	

STATE OF ILLINOIS
DEPARTMENT OF TRANSPORTATION

CH17
REMOVAL PLAN

SCALE: 1"=50' | SHEET 1 OF 2 SHEETS | STA. TO STA.

F.A.I. RTE.	SECTION	COUNTY	TOTAL SHEETS	SHEET NO.
57	(10-31HB) BR	CHAMPAIGN	65	17

CONTRACT NO. 70908

ILLINOIS | FED. AID PROJECT

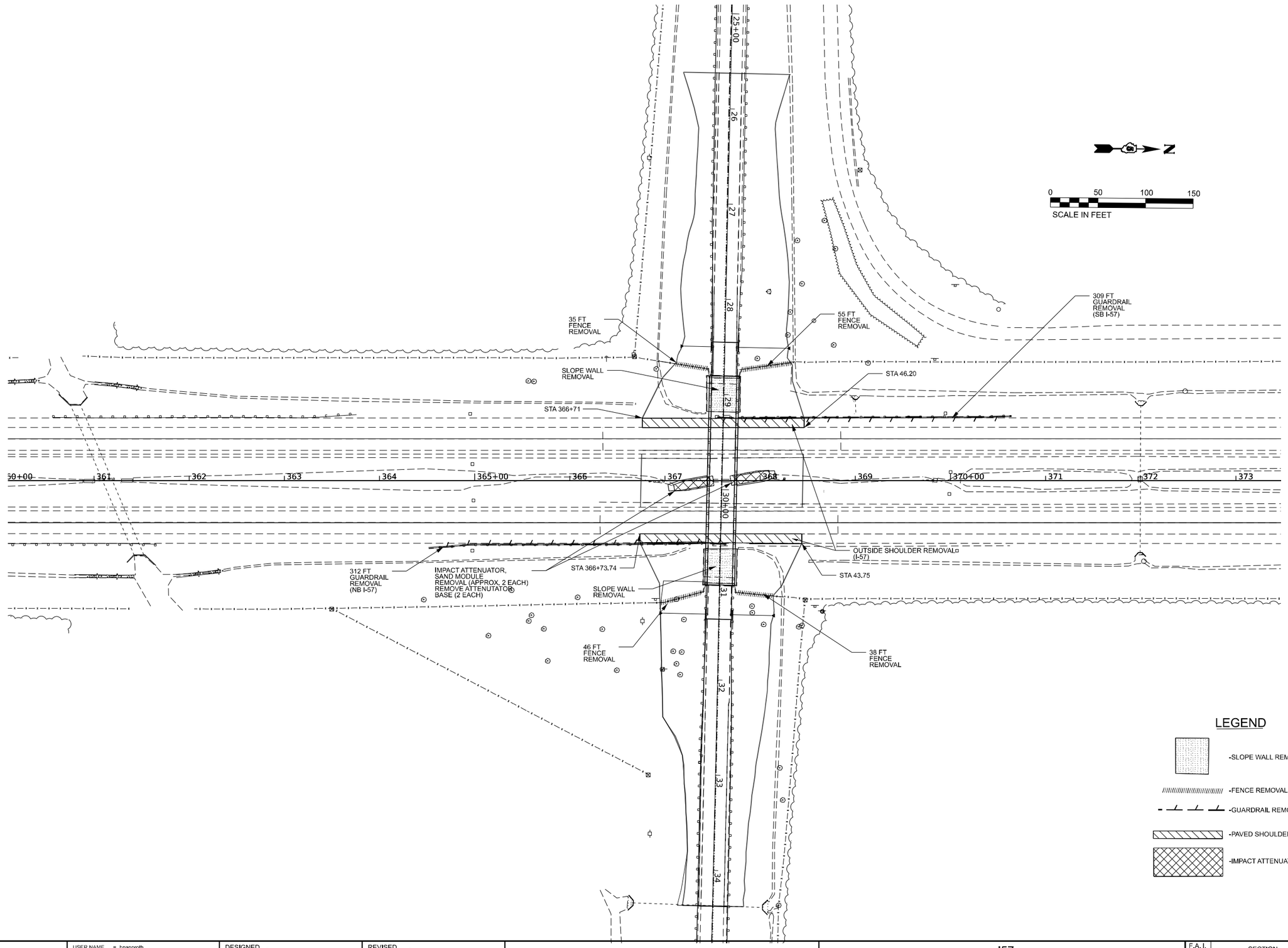

LEGEND

- SLOPE WALL REMOVAL
- FENCE REMOVAL
- GUARDRAIL REMOVAL
- PAVED SHOULDER REMOVAL
- IMPACT ATTENUATOR SAND MODULE REMOVAL

MODEL: I69 - Plan 2
FILE NAME: P:\20-1055.01 Phase II ILS7 under CH170_IDOT\CAD_Sheets\D576908-sht-removal57.dgn

USER NAME = hpapproth	DESIGNED -	REVISED -	
	DRAWN -	REVISED -	
PLOT SCALE = 0.16666633 ' / in.	CHECKED -	REVISED -	
PLOT DATE = 3/22/2023	DATE -	REVISED -	

STATE OF ILLINOIS
DEPARTMENT OF TRANSPORTATION

I57
REMOVAL PLAN

SCALE: 1"=50' | SHEET 2 OF 2 SHEETS | STA. | TO STA.

F.A.I. RTE.	SECTION	COUNTY	TOTAL SHEETS	SHEET NO.
57	(10-31HB) BR	CHAMPAIGN	65	18
		CONTRACT NO. 70908		
	ILLINOIS	FED. AID PROJECT		

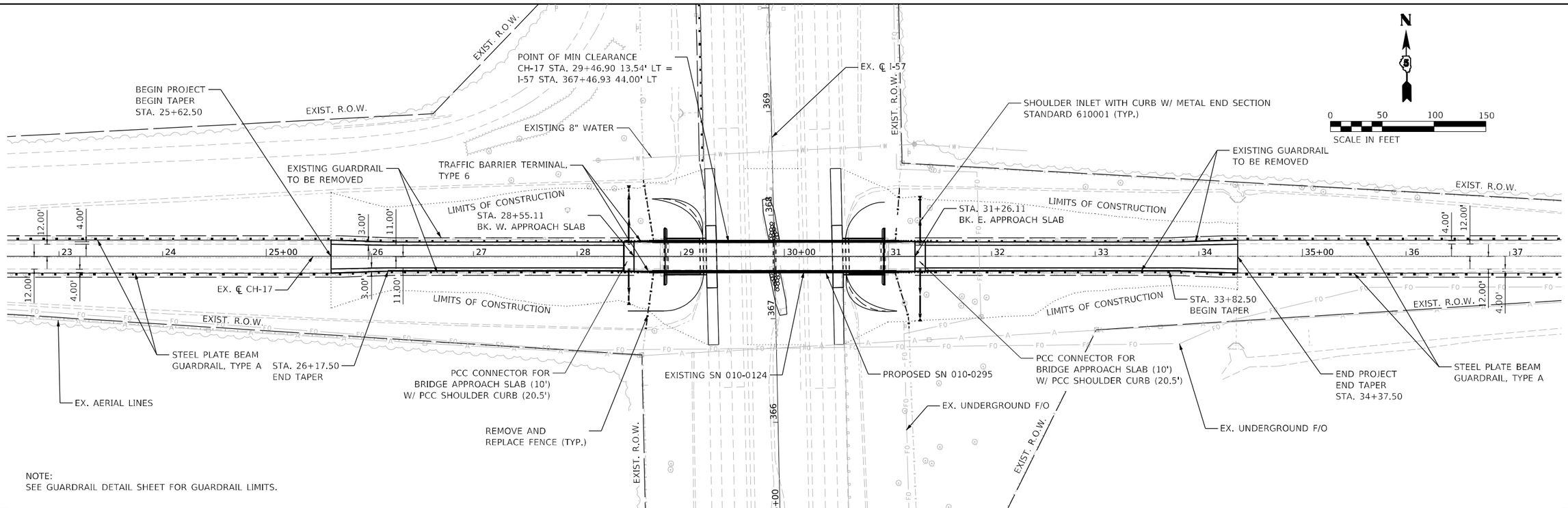

NOTE:
SEE GUARDRAIL DETAIL SHEET FOR GUARDRAIL LIMITS.

PLAN		BY	DATE
NOTE BOOK NO.	SURVEYED		
	PLOTTED		
	ALIGNMENT CHECKED		
	RT. OF WAY CHECKED		
	CADD FILE NAME		

PROFILE		BY	DATE
NOTE BOOK NO.	SURVEYED		
	PLOTTED		
	GRADES CHECKED		
	B.M. NOTED		
	STRUCTURE NOTATNS CHKD		

MODEL:
FILE NAME: T:\TRG\Business\Clients\IDOT\Projects\20-040 PTB 195-041 I-57 Bridge\400 CADD\CAD_Sheets\D570908-sht-plprf_CH17.dgn

Ardmore Roderick

USER NAME = nickbrustin	DESIGNED - MRT	REVISED -	
	DRAWN - MRT	REVISED -	
PLOT SCALE = 0.16666633 ' / in.	CHECKED - CJD	REVISED -	
PLOT DATE = 5/9/2023	DATE - 03/20/2023	REVISED -	

STATE OF ILLINOIS
DEPARTMENT OF TRANSPORTATION

PLAN & PROFILE
CH–17

SCALE: 1"=50' | SHEET 1 OF 3 SHEETS | STA. 22+50 TO STA. 37+50

F.A.I. RTE.	SECTION	COUNTY	TOTAL SHEETS	SHEET NO.
57	(10-31HB)BR	CHAMPAIGN	65	19
		CONTRACT NO. 70908		

FED. ROAD DIST. NO. 5 | ILLINOIS | FED. AID PROJECT

SOUTHBOUND I-57 PROPOSED OUTSIDE SHOULDER			
POINT	STATION	OFFSET	ELEVATION
I	366+76.18	55.68	(689.66)
J	366+76.18	65.77	(689.20)
K	367+31.18	55.79	(689.64)
L	367+31.18	65.79	689.57
M	367+91.20	55.90	(689.72)
N	367+91.20	65.90	689.59
O	368+46.20	55.89	(689.82)
P	368+46.20	65.55	(689.39)

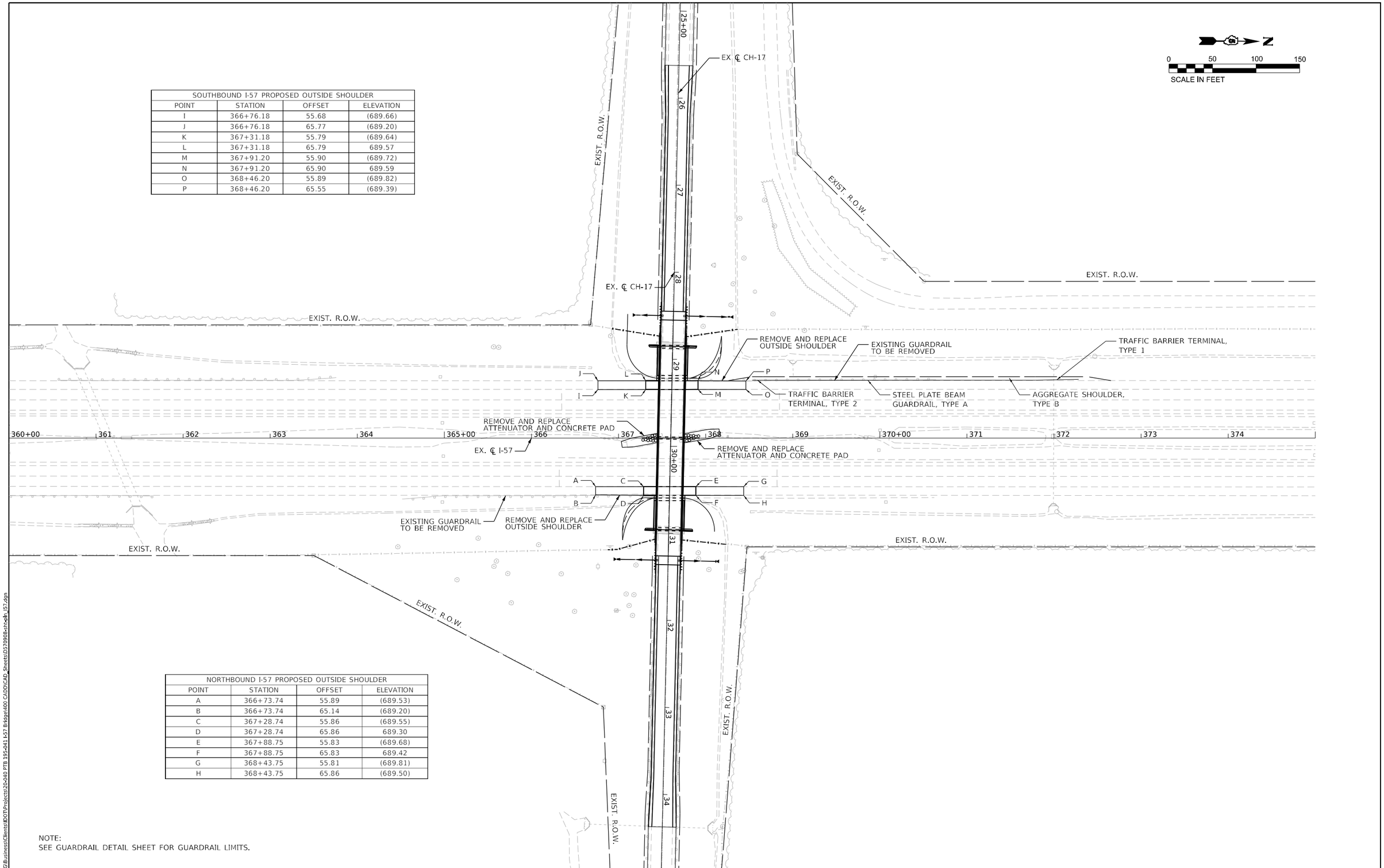

NORTHBOUND I-57 PROPOSED OUTSIDE SHOULDER			
POINT	STATION	OFFSET	ELEVATION
A	366+73.74	55.89	(689.53)
B	366+73.74	65.14	(689.20)
C	367+28.74	55.86	(689.55)
D	367+28.74	65.86	689.30
E	367+88.75	55.83	(689.68)
F	367+88.75	65.83	689.42
G	368+43.75	55.81	(689.81)
H	368+43.75	65.86	(689.50)

NOTE:
SEE GUARDRAIL DETAIL SHEET FOR GUARDRAIL LIMITS.

MODEL:
FILE NAME: T:\TRG\Business\Clients\IDOT\Projects\20-040 PTB 195-041 I-57 Bridge\400 CADD\CAD_Sheets\D570908-sht-pln_I57.dgn

Ardmore Roderick

USER NAME = MatthewToussaint	DESIGNED - MRT	REVISED -	
	DRAWN - MRT	REVISED -	
PLOT SCALE = 0.16666633 ' / in.	CHECKED - CJD	REVISED -	
PLOT DATE = 3/22/2023	DATE - 03/20/2023	REVISED -	

STATE OF ILLINOIS
DEPARTMENT OF TRANSPORTATION

PLAN
I-57

SCALE: 1" = 50' | SHEET 2 OF 3 SHEETS | STA. 360+00 TO STA. 375+00

F.A.I. RTE.	SECTION	COUNTY	TOTAL SHEETS	SHEET NO.
57	(10-31HB)BR	CHAMPAIGN	65	20
SN 010-0295		CONTRACT NO. 70908		
FED. ROAD DIST. NO. 5	ILLINOIS	FED. AID PROJECT		

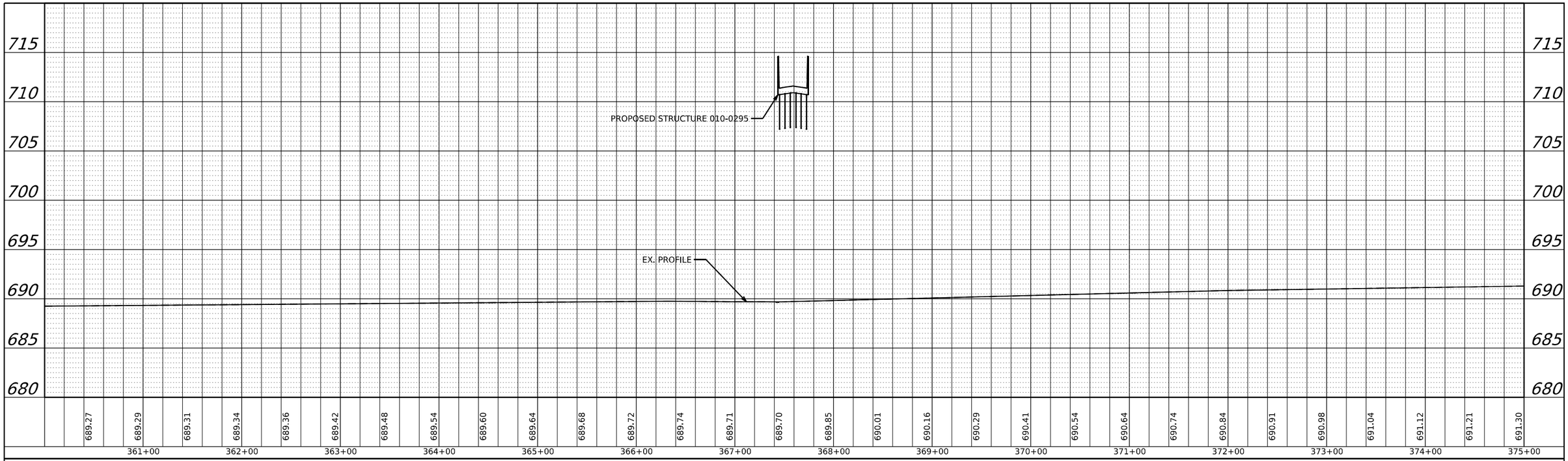

EXISTING PROFILE NORTHBOUND I-57

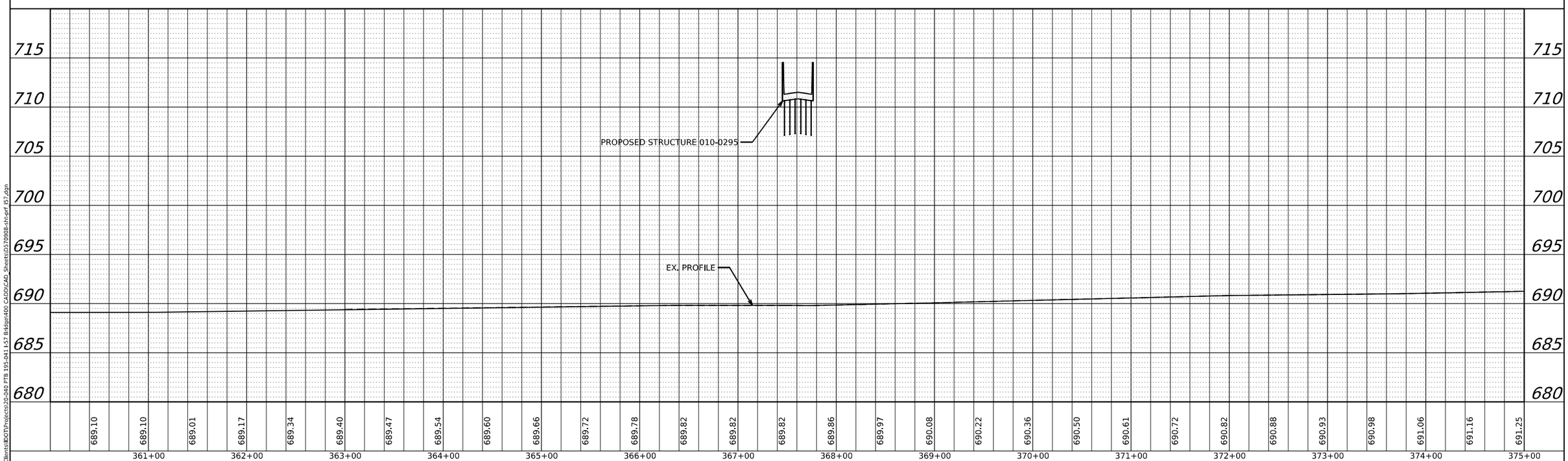

EXISTING PROFILE SOUTHBOUND I-57

PLAN
SURVEYED
PLOTTED
ALIGNMENT CHECKED
RT. OF WAY CHECKED
CADD FILE NAME
NOTE BOOK
NO.
BY
DATE

PROFILE
SURVEYED
PLOTTED
GRADES CHECKED
B.M. NOTED
STRUCTURE NOTATNS CHKD
NOTE BOOK
NO.
BY
DATE

MODEL: BL_I57 [Sheet]
FILE NAME: T:\TRG\Business\Clients\IDOT\Projects\20-040 PTB 195-041 I-57 Bridge\400 CADD\CAD_Sheets\D570908-sht-prf_I57.dgn

Ardmore Roderick

USER NAME = MatthewToussaint	DESIGNED - MRT	REVISED -	
	DRAWN - MRT	REVISED -	
PLOT SCALE = 0.16666633 ' / in.	CHECKED - CJD	REVISED -	
PLOT DATE = 3/22/2023	DATE - 03/20/2023	REVISED -	

STATE OF ILLINOIS
DEPARTMENT OF TRANSPORTATION

EXISTING PROFILE
I–57

SCALE: 1":50' | SHEET 3 OF 3 SHEETS | STA. 360+00 TO STA. 375+00

F.A.I. RTE.	SECTION	COUNTY	TOTAL SHEETS	SHEET NO.
57	(10-31HB)BR	CHAMPAIGN	65	21
	SN 010-0295	CONTRACT NO. 70908		
FED. ROAD DIST. NO. 5	ILLINOIS	FED. AID PROJECT		

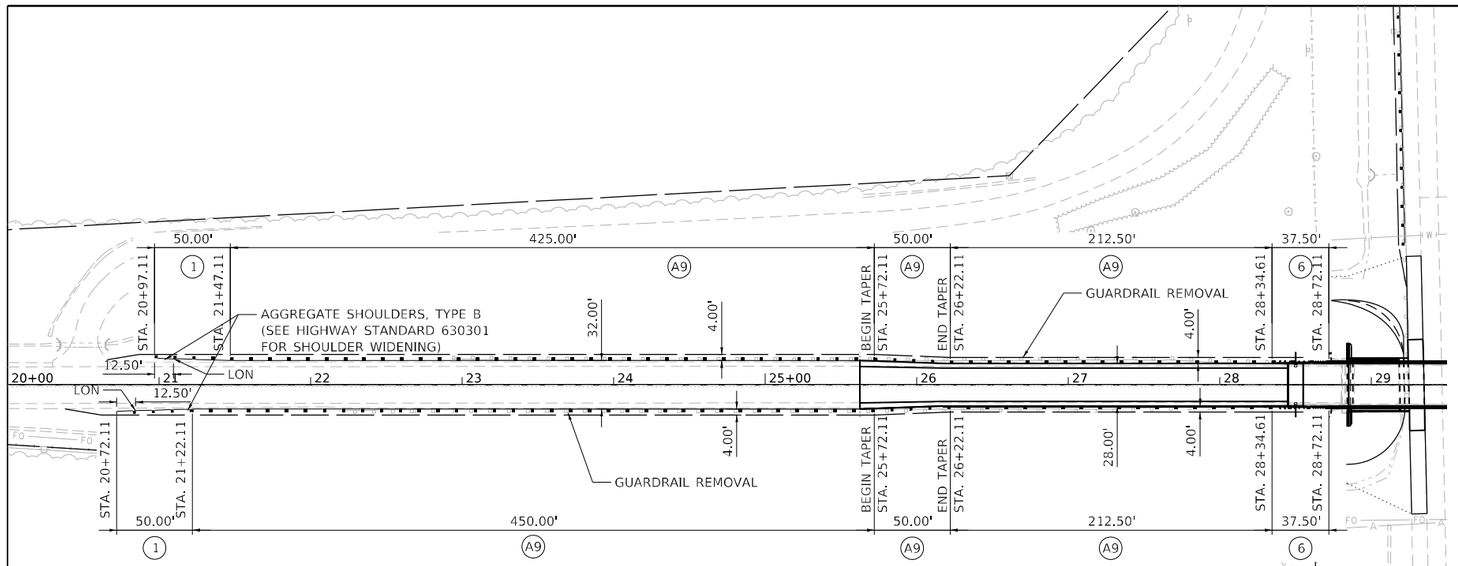

CH-17 WEST

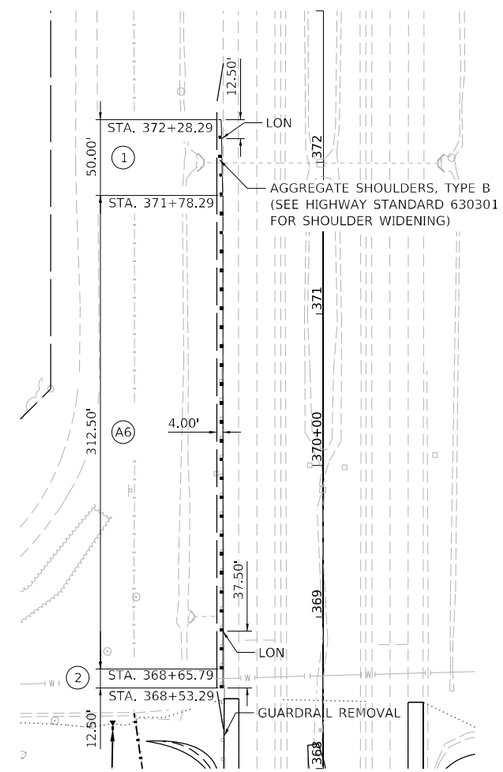

I-57 SB SHOULDER

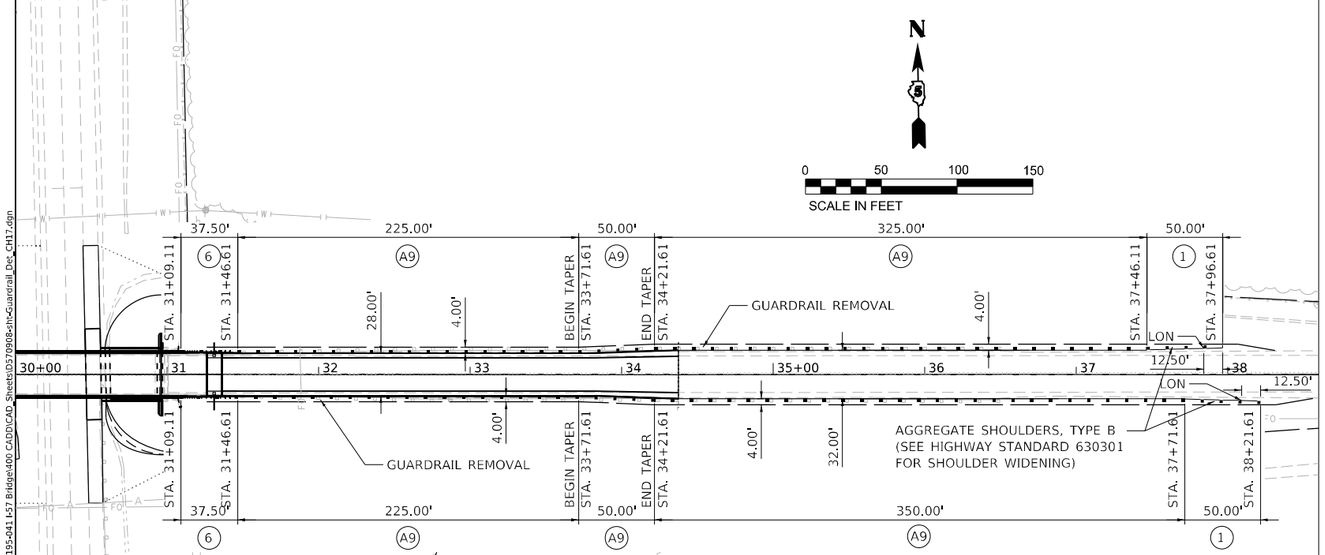

CH-17 EAST

LEGEND

1	TRAFFIC BARRIER TERMINAL, TYPE 1 (SPECIAL) TANGENT
2	TRAFFIC BARRIER TERMINAL, TYPE 2
6	TRAFFIC BARRIER TERMINAL, TYPE 6
A6	STEEL PLATE BEAM GUARDRAIL, TYPE A, 6 FOOT POSTS
A9	STEEL PLATE BEAM GUARDRAIL, TYPE A, 9 FOOT POSTS
LON	LENGTH OF NEED POINT

MODEL:
FILE NAME: T:\TRGBusiness\Clients\IDOT\Projects\20-040 PTB 195-041 I-57 Bridge400 CADD\CAD_Sheets\D570908-Ill-Guardrail_Det_CH17.dgn

Ardmore Roderick

USER NAME = MatthewToussaint	DESIGNED - MRT	REVISED -	
	DRAWN - MRT	REVISED -	
PLOT SCALE = 0.16666633 ' / in.	CHECKED - CJD	REVISED -	
PLOT DATE = 3/22/2023	DATE - 03/20/2023	REVISED -	

STATE OF ILLINOIS
DEPARTMENT OF TRANSPORTATION

GUARDRAIL DETAILS

SCALE: 1" = 50' | SHEET 4 OF 5 SHEETS | STA. | TO STA.

F.A.I. RTE.	SECTION	COUNTY	TOTAL SHEETS	SHEET NO.
57	(10-31HB)BR	CHAMPAIGN	65	22
	SN 010-0295	CONTRACT NO. 70908		
FED. ROAD DIST. NO. 5	ILLINOIS	FED. AID PROJECT		

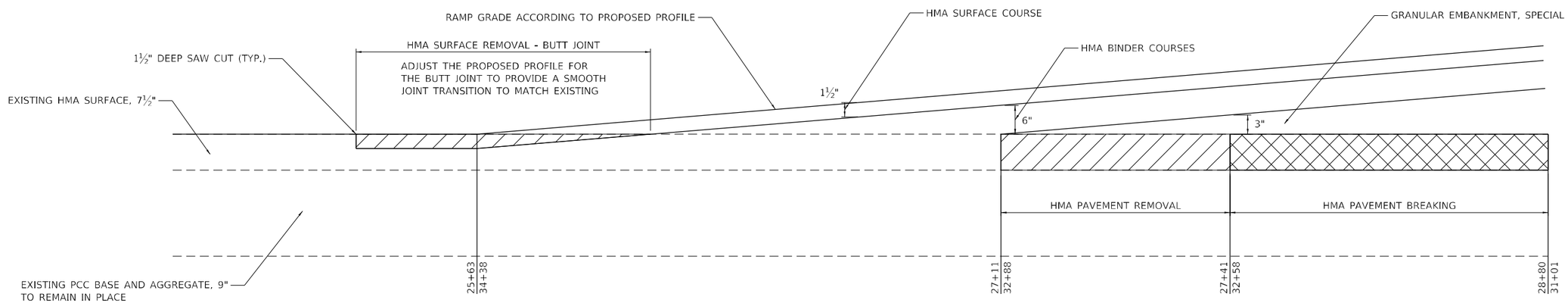

BUTT JOINT DETAIL
COUNTY HIGHWAY 17

STA. 25+53.00 TO STA. 26+29.00
STA. 33+70.00 TO STA. 34+48.00

NOTE:
SAW CUT IS INCLUDED IN COST OF
HOT-MIX ASPHALT SURFACE REMOVAL - BUTT JOINT.

MODEL:
FILE NAME: T:\TRG\Business\Clients\IDOT\Projects\20-040 PTB 195-041 I-57 Bridge\400 CADD\CAD_Sheets\D570908-sht-ButtJointDetail.dgn

Ardmore Roderick

USER NAME = MatthewToussaint	DESIGNED - MRT	REVISED -	
	DRAWN - MRT	REVISED -	
PLOT SCALE = 0.16666633 ' / in.	CHECKED - CJD	REVISED -	
PLOT DATE = 3/22/2023	DATE - 03/20/2023	REVISED -	

STATE OF ILLINOIS
DEPARTMENT OF TRANSPORTATION

BUTT JOINT DETAIL

SCALE: | SHEET 5 OF 5 SHEETS | STA. TO STA.

F.A.I. RTE.	SECTION	COUNTY	TOTAL SHEETS	SHEET NO.
57	(10-31HB)BR	CHAMPAIGN	65	23
SN 010-0295		CONTRACT NO. 70908		
FED. ROAD DIST. NO. 5	ILLINOIS	FED. AID PROJECT		

MAINTENANCE OF TRAFFIC GENERAL NOTES

1. THE CONTRACTOR SHALL COORDINATE MAINTENANCE OF TRAFFIC OF THIS PROJECT WITH OTHER PROJECTS IN ADJACENT SECTION. SEE TRAFFIC CONTROL SPECIAL PROVISIONS FOR COORDINATION REQUIREMENTS.

2. ALL TRAFFIC CONTROL DEVICES (BARREL/BARRICADES/PANELS) SHALL BE IN NEW OR LIKE NEW CONDITION. WHEN THE DEVICES BECOME WORN, DIRTY, FADED, OR OTHERWISE DEEMED NO LONGER IN LIKE NEW CONDITION BY THE ENGINEER, THE DEVICE WILL BE REFURBISHED, CLEANED, OR REPLACED.

3. ALL TRAFFIC CONTROL DEVICES USED FOR THE MAINTENANCE OF TRAFFIC SHALL MEET MASH REQUIREMENTS. THE CONTRACTOR SHALL SUPPLY THE ENGINEER WITH PAPERWORK CERTIFYING THAT THIS REQUIREMENT IS MET PRIOR TO THE INSTALLATION OF ANY TRAFFIC CONTROL DEVICES.

4. ALL DRUMS, VERTICAL PANELS AND BARRICADES PLACED IMMEDIATELY ADJACENT TO THE EDGE OF TRAVELED WAY SHALL BE EQUIPPED WITH STEADY BURN MONO-DIRECTIONAL LAMPS.

5. PRIOR TO BEGINNING ANY CONSTRUCTION, THE CONTRACTOR SHALL BE REQUIRED TO ATTEND A TRAFFIC CONTROL MEETING TO ASCERTAIN THE EXACT SCHEDULING OF THE TRAFFIC STAGES AN ANY INTERMEDIATE CHANGES NECESSARY. IF AN ALTERNATE TRAFFIC PATTERN IS REQUIRED WITHIN THIS CONTRACT, THE CONTRACTOR SHALL SUBMIT A MAINTENANCE OF TRAFFIC DEVIANCE PLAN FOR APPROVAL BY THE RESIDENT ENGINEER AND THE DISTRICT. FOR ADDITIONAL INFORMATION REGARDING COORDINATION SEE STANDARD SPECIFICATION ARTICLE 701.04.

6. TEMPORARY, OFF-PEAK HOUR LANE CLOSURES MUST BE REQUESTED THROUGH THE ENGINEER AND AS SPECIFIED IN THE SPECIAL PROVISIONS. WHEN OFF-PEAK HOUR OR WEEKEND LANE CLOSURES ARE REQUIRED, A TRAILER MOUNTED FULL MATRIX PORTABLE CHANGEABLE MESSAGE SIGN SHALL BE INSTALLED ONE WEEK PRIOR TO THE CLOSURE. COST TO BE INCLUDED IN THE COST FOR TRAFFIC CONTROL AND PROTECTION. THE MESSAGE SIGN WORDING AND LOCATION WILL BE DETERMINED BY THE ENGINEER.

7. ANY SIGNS THAT ARE TO BE IN PLACE FOR MORE THAN FOUR DAYS SHALL BE POST MOUNTED WHEN FEASIBLE AS DETERMINED BY THE ENGINEER.

8. ALL ADVANCE "ROAD WORK" SIGNS, W20-1 SERIES, AS SHOWN ON THE PLANS, REFERENCED IN THE STANDARDS OR DIRECTED BY THE ENGINEER, SHALL BE EQUIPPED WITH A TYPE B MONODIRECTIONAL FLASHING LIGHT. THE COST OF THIS WORK SHALL BE INCLUDED IN THE COST FOR TRAFFIC CONTROL AND PROTECTION.

9. THE ENGINEER SHALL DETERMINE THE LOCATIONS OF TRAILER MOUNTED FULL MATRIX PORTABLE CHANGEABLE MESSAGE SIGNS.

10. BARRICADE: THE CONTRACTOR SHALL PROVIDE AND INSTALL TWO (2) WEIGHTED SAND BAGS ON EACH TYPE II BARRICADE USED ONE (1) WEIGHTED SAND BAG ACROSS EACH BOTTOM RAIL. THIS SHALL BE INCLUDED IN THE COST OF TRAFFIC CONTROL AND PROTECTION.

11. BARRIER DELINEATORS SHALL BE PLACED AT 25' C-C ON GUARDRAIL, PARAPETS AND ON TEMPORARY CONCRETE BARRIERS WHERE TRAFFIC WILL BE ADJACENT TO THESE BARRIERS BASED ON THE MAINTENANCE OF TRAFFIC STAGING. DEPENDING ON THE LOCATION OF ADJACENT TRAFFIC, THE BARRIER DELINEATORS WILL BE PAID FOR AS THE FOLLOWING:
    - BARRIER WALL REFLECTORS, TYPE C

12. CHANGEABLE MESSAGE SIGNS REQUIRED PER STANDARDS SHALL NOT BE PAID FOR SEPARATELY BUT INCLUDE IN THE COST OF TRAFFIC CONTROL AND PROTECTION (SPECIAL)

13. THE CONTRACTOR SHALL RELOCATE OR COVER ALL EXISTING, AND PROPOSED SIGNS THAT CONFLICT WITH THE CURRENT CONSTRUCTION STAGE. SIGNS THAT DO NOT CONFLICT WITH THE CURRENT CONSTRUCTION STAGE AND ARE NOT MARKED FOR RELOCATION SHALL REMAIN AS PREVIOUSLY CONFIGURED. THIS WILL NOT BE PAID FOR SEPARATELY BUT SHALL BE INCLUDED IN THE UNIT COST OF TRAFFIC CONTROL AND PROTECTION.

14. THE CONTRACTOR SHALL COMPLY WITH THE REQUIREMENTS OF THE IDOT SAFETY ENGINEERING POLICY MEMORANDUM 4-21.

15. TEMPORARY MAINLINE TRAFFIC CONFIGURATIONS SHALL INCLUDE 2-12' WIDE LANES WITH 2' (MINIMUM) WIDE LEFT AND RIGHT SHOULDERS UNLESS SHOWN OTHERWISE HEREIN OR AS DIRECTED BY THE ENGINEER.

16. TEMPORARY BARRIER WALL SHALL BE INSTALLED AS DELINEATED ON THE M.O.T. PLAN SHEETS AND TYPICAL SECTIONS PRIOR TO THE START OF SUBSEQUENT STAGE WORK.

17. TEMPORARY CONCRETE BARRIER REMOVAL SHALL NOT BE PAID FOR SEPARATELY BUT SHALL BE INCLUDED TRAFFIC CONTROL AND PROTECTION (SPECIAL).

18. ALL TEMPORARY CONCRETE BARRIER SHALL BE SET UP DURING OFF-PEAK HOURS UNDER TEMPORARY LANE CLOSURES, UNLESS OTHERWISE APPROVED BY THE ENGINEER.

19. TEMPORARY IMPACT ATTENUATOR SHALL BE TEST LEVEL 3.

20. ALL TEMPORARY BARRIER FLARES SHALL TRANSITION AWAY FROM TRAFFIC AT THE APPROACH END 12:1 OR FLATTER. ALL EXPOSED TEMPORARY BARRIER WALL TERMINALS SHALL BE PROTECTED WITH TEMPORARY ATTENUATION DEVICES ON THE APPROACH END.

21. THE CONTRACTOR SHALL MAINTAIN POSITIVE DRAINAGE AS REQUIRED OR AS DIRECTED BY THE ENGINEER THROUGHOUT THE CONSTRUCTION ZONE FOR THE PERIOD OF THE CONSTRUCTION.

22. WHEN PAVEMENT DROP-OFF IS TO REMAIN ADJACENT TO A LIVE TRAFFIC LANE, BARRICADES WITH PIPE EXTENSIONS SHALL BE USED TO ACHIEVE THE CORRECT ELEVATION.

23. USE END SHOE CONNECTIONS OR TEMPORARY TERMINAL END TREATMENTS TO JOIN TEMPORARY CONCRETE BARRIER TO EXISTING CONCRETE BARRIER OR RAILING, WHERE APPLICABLE AT LOCATIONS APPROVED BY THE ENGINEER. COST FOR THESE TEMPORARY CONNECTIONS TO BE INCLUDED IN TRAFFIC CONTROL AND PROTECTION (SPECIAL).

MAINTENANCE OF TRAFFIC - SEQUENCE OF CONSTRUCTION

STAGE 1

CONSTRUCTION

1. REMOVE EXISTING COUNTY HIGHWAY 17 BRIDGE DECK OVER I-57 AND OUTSIDE PIERS.
2. REMOVE EXISTING SLOPE WALL AND EXISTING GUARD RAIL APPROACHING THE BRIDGE.

TRAFFIC CONTROL

1. INSTALL TRAFFIC CONTROL PROTECTION AND SIGNAGE ALONG COUNTY HIGHWAY 17 AS SHOWN ON THE PLANS PRIOR TO BEGINNING THE CLOSURE.
2. CLOSE COUNTY HIGHWAY 17 OVER I-57 AS SHOWN ON THE PLANS.
3. CONTRACTOR SHALL UTILIZE TEMPORARY LANE SINGLE LANE CLOSURE STANDARD 701400 AND 701401. DURING THE INSTALLATION OF TEMPORARY CONCRETE BARRIER.
4. MAINTAIN EXISTING 2 LANES OF I-57 IN NORTHBOUND AND SOUTHBOUND DIRECTION DURING THIS STAGE. TEMPORARY LANE CLOSURES SHALL BE IMPLEMENTED DURING THE TIME AS SPECIFIED IN THE SPECIAL PROVISION "OFF PEAK INTERSTATE SINGLE LANE CLOSURE".
5. CONTRACTOR SHALL UTILIZE OFF-PEAK 15 MINUTE INTERVAL INTERSTATE CLOSURES ONLY DURING THE REMOVAL OF CH17 GIRDERS.

STAGE 1A

CONSTRUCTION

1. REMOVE COUNTY HIGHWAY 17 BRIDGE CENTER PIER.
2. CONSTRUCT PROPOSED CENTER PIER FOR THE COUNTY HIGHWAY 17 BRIDGE.
3. CONSTRUCT ABUTMENTS FOR THE COUNTY HIGHWAY 17 BRIDGE.
4. CONSTRUCT SUPERSTRUCTURE FOR THE COUNTY HIGHWAY 17 BRIDGE.

TRAFFIC CONTROL

1. MAINTAIN EXISTING 2 LANES OF I-57 IN NORTHBOUND AND SOUTHBOUD DIRECTION DURING THE REMOVAL AND CONSTRUCTION OF COUNTY HIGHWAY 17 CENTER PIER AND OUTSIDE ABUTMENTS.
2. CONTRACTOR SHALL UTILIZE TEMPORARY LANE SINGLE LANE CLOSURE STANDARD 701400 AND 701401. DURING THE ERECTION OF GIRDERS. TEMPORARY LANE CLOSURES SHALL BE IMPLEMENTED DURING THE TIME AS SPECIFIED IN THE SPECIAL PROVISION "OFF PEAK INTERSTATE SINGLE LANE CLOSURE".
3. CONTRACTOR SHALL UTILIZE OFF-PEAK 15 MINUTE INTERVAL INTERSTATE CLOSURES ONLY DURING THE ERECTION OF CH17 GIRDERS.

STAGE 2

CONSTRUCTION

1. CONSTRUCT OUTSIDE SHOULDER ALONG I-57 AS SHOWN ON THE PLANS

TRAFFIC CONTROL

1. CONTRACTOR SHALL UTILIZE TEMPORARY LANE SINGLE LANE CLOSURE STANDARD 701400 AND 701401. DURING THE CONTRUCTION OF OUTSIDE SHOULDER.

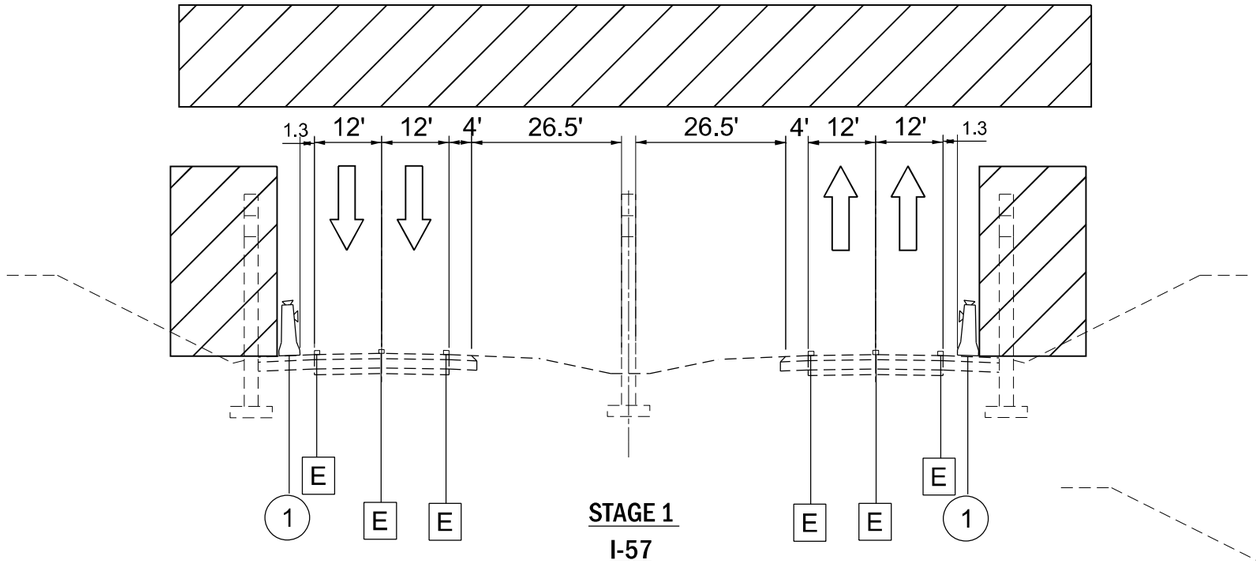

STAGE 1
I-57

STA 367+42.21 TO STA 367+75.56

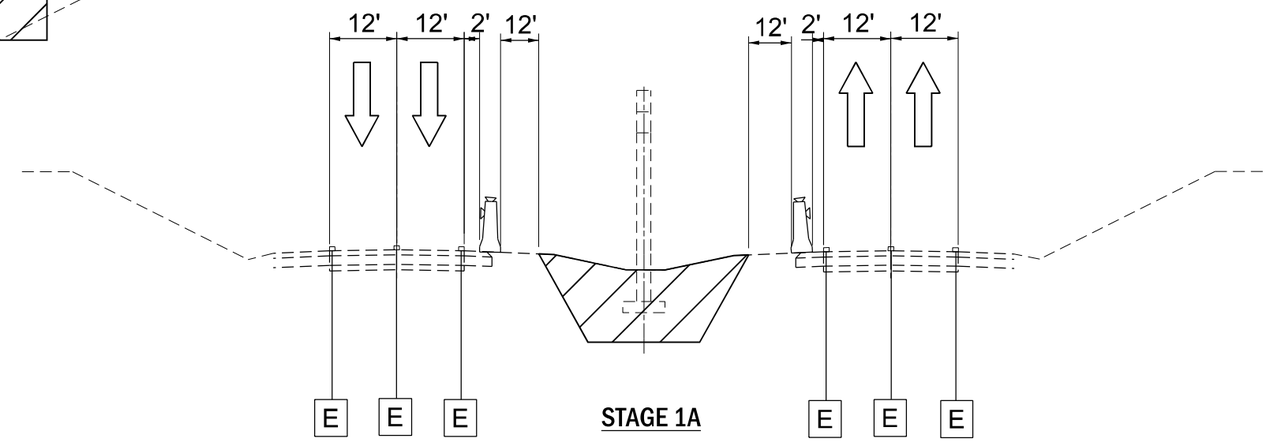

STAGE 1A
I-57

CENTER PIER DEMOLITION AND CONSTRUCTION

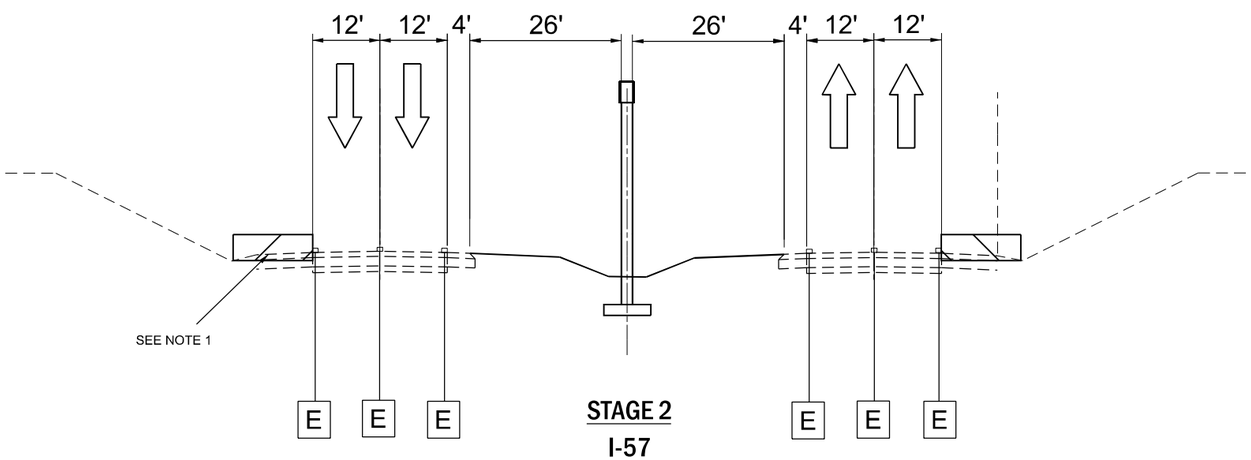

STAGE 2
I-57

NOTE

1. OUTSIDE SHOULDER RECONSTRUCTION, CONTRACTOR SHOULD CLOSE OUTSIDE LANE DURING HOURS SPECIFIED IN "OFF PEAK SINGLE LANE CLOSURE" SPECIAL PROVISION.

LEGEND

- WORK AREA
- DIRECTION OF TRAFFIC
- (1) TEMPORARY CONCRETE BARRIER
- [E] EXISTING PAVEMENT MARKING TO REMAIN

MODEL: Default
FILE NAME: Z:\Shared\Projects\IDOT\P-25-035-19_D-25-024-20 • Ardmore\03 Design\02_CADD Sheets\0570908-sht-typical-8_01.dgn

OSEH inc.

USER NAME = SravanMarlinganti	DESIGNED -	REVISED -	
	DRAWN -	REVISED -	
PLOT SCALE = 21.5873 ' / in.	CHECKED -	REVISED -	
PLOT DATE = 3/20/2023	DATE -	REVISED -	

STATE OF ILLINOIS
DEPARTMENT OF TRANSPORTATION

MAINTENANCE OF TRAFFIC
TYPICAL SECTIONS

SCALE: | SHEET 1 OF 1 SHEETS | STA. | TO STA.

F.A.I. RTE.	SECTION	COUNTY	TOTAL SHEETS	SHEET NO.
57	(10-31HB)BR	CHAMPAIGN	65	25
	SN 010-0295	CONTRACT NO. 70908		
FED. ROAD DIST. NO. 5	ILLINOIS	FED. AID PROJECT		

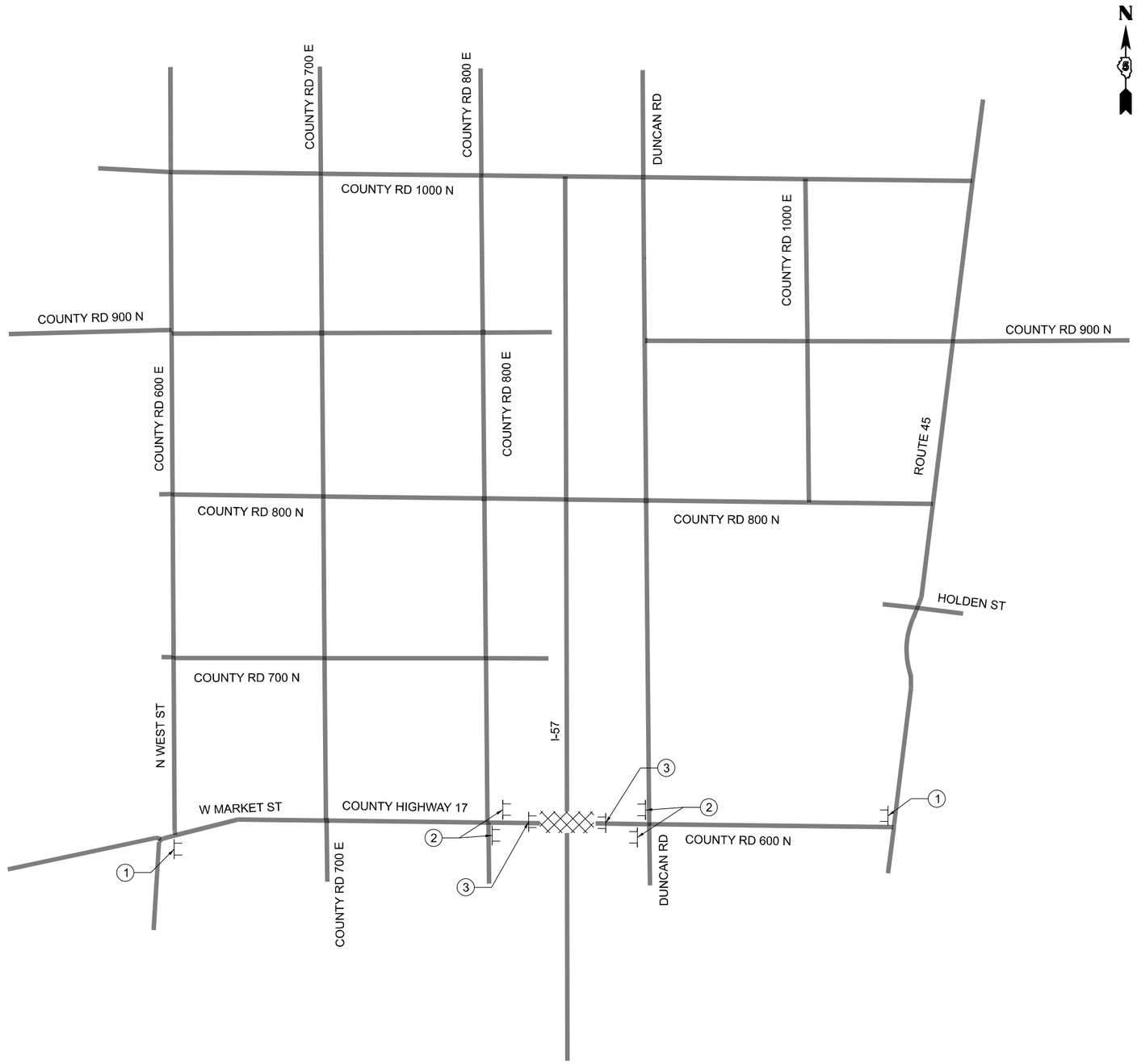

ROAD CLOSED
2 MILES AHEAD
LOCAL TRAFFIC ONLY

R11-3b

1

ROAD CLOSED
TO
THRU TRAFFIC

R11-4

2

ROAD
CLOSED

R11-2

3

GENERAL NOTES

1. ROAD CLOSURE DETAILS, APPROACH SIGN AND TRAFFIC CONTROL FOR DETOUR SHALL BE ACCORDING TO DISTRICT 5 DETAIL 70200000.
2. TYPICAL SIGN SPACING SHOULD BE AS SHOWN ON DISTRICT 5 DETAIL NO. 70200000.
3. THE COST FOR INSTALLATION OF TRAFFIC CONTROL AND PROTECTION AND SIGNAGE ALONG COUNTY HIGHWAY 17 WILL NOT BE PAID FOR SEPARATELY, BUT WILL BE INCLUDED IN THE PAY ITEM "TRAFFIC CONTROL AND PROTECTION (SPECIAL)".

LEGEND

TYPE III BARRICADE

WORK AREA

MODEL: Default
FILE NAME: Z:\Shared\Projects\IDOT\P-4\Sta403\-19_D-95-02-20 - Ardmore\03 Design\01_CADD Drawings\DETOUR.dgn

OSEH inc.

USER NAME = SravanMarlinganti	DESIGNED - ____	REVISED - ____	
	DRAWN - ____	REVISED - ____	
PLOT SCALE = 4000.000 ' / in.	CHECKED - ____	REVISED - ____	
PLOT DATE = 3/20/2023	DATE - ____	REVISED - ____	

STATE OF ILLINOIS
DEPARTMENT OF TRANSPORTATION

MAINTENANCE OF TRAFFIC
ROAD CLOSURE ADVANCE SIGNAGE

SCALE: 1"=2000' | SHEET 1 OF 1 SHEETS | STA. ____ TO STA. ____

F.A.I. RTE.	SECTION	COUNTY	TOTAL SHEETS	SHEET NO.
57	(10-31HB)BR	CHAMPAIGN	65	26
	SN 010-0295	CONTRACT NO. 70908		
FED. ROAD. DIST. NO. 5	ILLINOIS	FED. AID PROJECT		

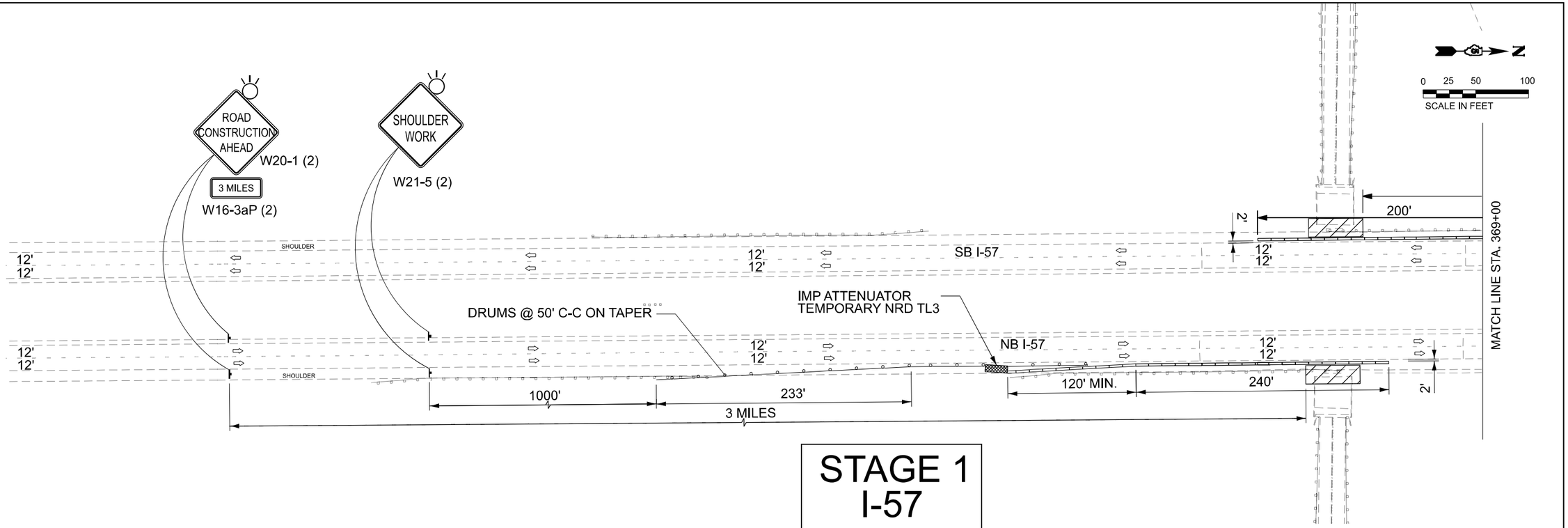

STAGE 1
I-57

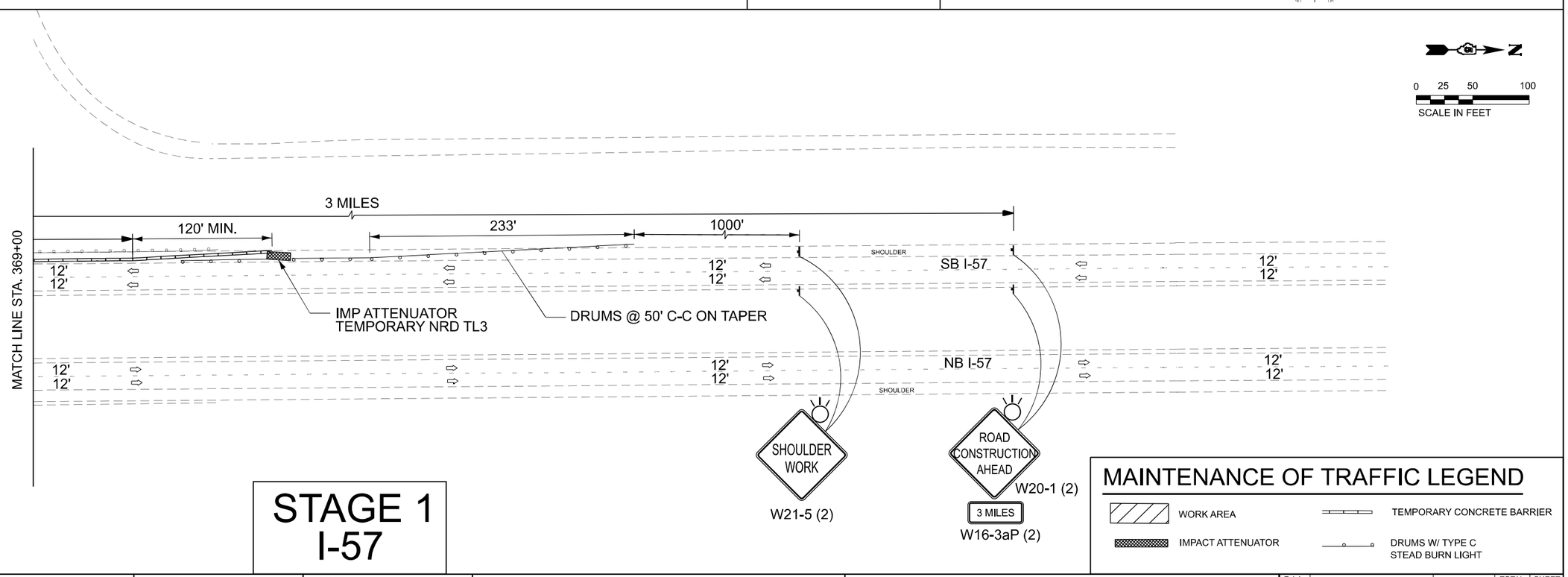

STAGE 1
I-57

MAINTENANCE OF TRAFFIC LEGEND

- WORK AREA
- IMPACT ATTENUATOR
- TEMPORARY CONCRETE BARRIER
- DRUMS W/ TYPE C STEAD BURN LIGHT

MODEL: Default
FILE NAME: Z:\Shared\Projects\IDOT\P-dfb4-03b-19_Del\5-02\4-20 - Ardmore\03 Design\02_CADD Sheets\Sht_Stage1_Annotation.dgn

OSEH inc.

USER NAME = SravanMarlingantl	DESIGNED - ____	REVISED - ____	
	DRAWN - ____	REVISED - ____	
PLOT SCALE = 100.000 ' / in.	CHECKED - ____	REVISED - ____	
PLOT DATE = 3/20/2023	DATE - 3/20/2023	REVISED - ____	

STATE OF ILLINOIS
DEPARTMENT OF TRANSPORTATION

MAINTENANCE OF TRAFFIC
STAGE 1

SCALE: 1" = 50' | SHEET 1 OF 1 SHEETS | STA. TO STA.

F.A.I. RTE.	SECTION	COUNTY	TOTAL SHEETS	SHEET NO.
57	(10-31HB)BR	CHAMPAIGN	65	27
SN 010-0295		CONTRACT NO. 70908		
FED. ROAD, DIST. NO. 5	ILLINOIS	FED. AID PROJECT		

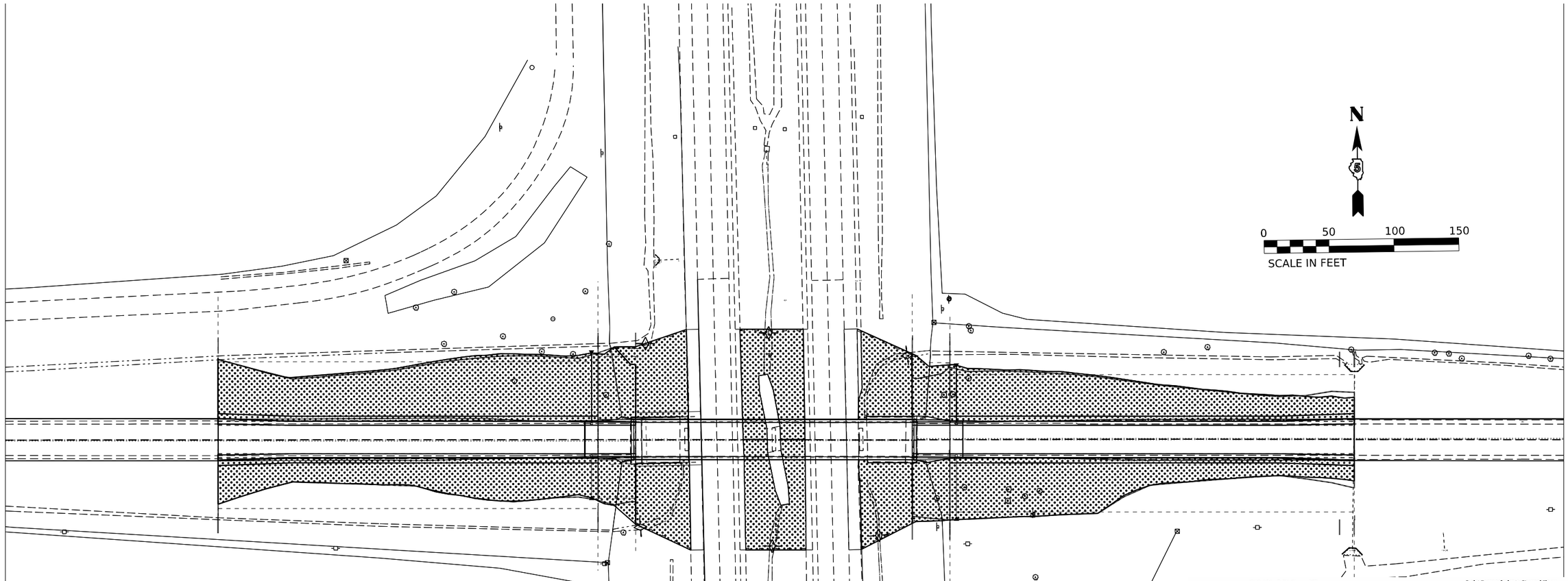

LEGEND

INLET AND PIPE PROTECTION

AGGREGATE DITCH CHECK

SEEDING CLASS 2A

PERIMETER EROSION BARRIER

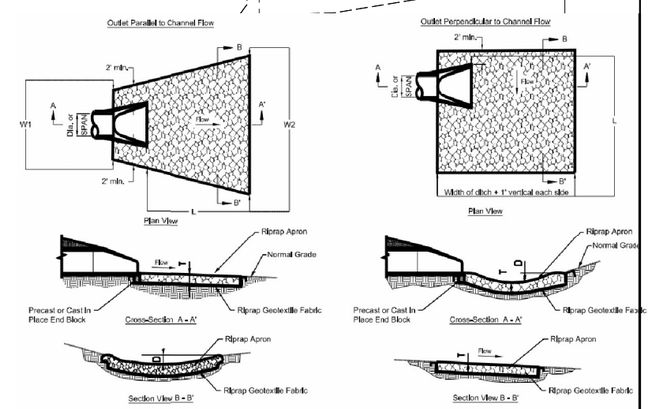

ROCK OUTLET PROTECTION DETAIL

N.T.S.

DIA. OF ROUND INLET PIPE (in)	IDOT RIPRAP GRADATION (RR)	RIPRAP BED THICKNESS (in)	APRON LEGNTH (ft)	APRON WIDTH UPSTREAM (ft)	APRON WIDTH DOWNSTREAM (ft)	DEPTH BELOW NORMAL GRADE
		T	L	W1	W2	D
12	RR-3	15.0	12.0	5.0	11.0	6.0
15	RR-3	15.0	14.0	5.0	12.0	6.0
18	RR-3	15.0	16.0	5.5	13.5	7.0
24	RR-4	15.0	20.0	6.0	16.0	10.0
30	RR-4	20.0	22.0	6.0	17.0	11.0
36	RR-4	20.0	24.0	7.0	19.0	11.0

MODEL: ExBLI-1 - Plan 1 [Sheet]
FILE NAME: P:\20-1055\01 Phase II ILEF under CH170_IDOT\CAD_Sheets\D570908-sht-Erosion_Control.dgn

Kaskaskia Engineering Group, LLC
PROFESSIONAL ENGINEERS
Illinois Professional Design Firm
Professional Engineering Group
LICENSE NO.
184.001973
20-1010586
201 E. Main St., Suite 200
Belleville, Illinois 62220
618.233.2417 phone
618.233.5555 fax
www.kaskaskiaeng.com

USER NAME = hpapproth	DESIGNED -	REVISED -	
	DRAWN -	REVISED -	
PLOT SCALE = 0.16666633 ' / in.	CHECKED -	REVISED -	
PLOT DATE = 3/22/2023	DATE -	REVISED -	

STATE OF ILLINOIS
DEPARTMENT OF TRANSPORTATION

EROSION CONTROL PLAN
I-57 AT CH-17 BRIDGE REHABILITATION

SCALE: | SHEET 1 OF 2 SHEETS | STA. | TO STA.

F.A. RTE.	SECTION	COUNTY	TOTAL SHEETS	SHEET NO.
57	(10-31HB)BR	CHAMPAIGN	65	28
		CONTRACT NO. 70908		
	ILLINOIS	FED. AID PROJECT		

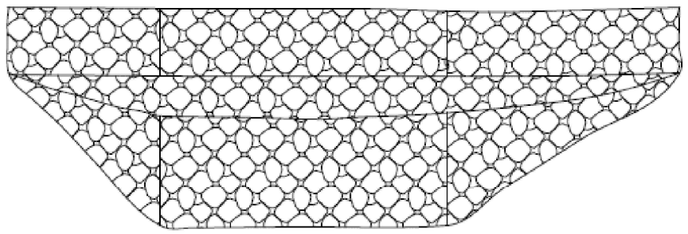

PLAN

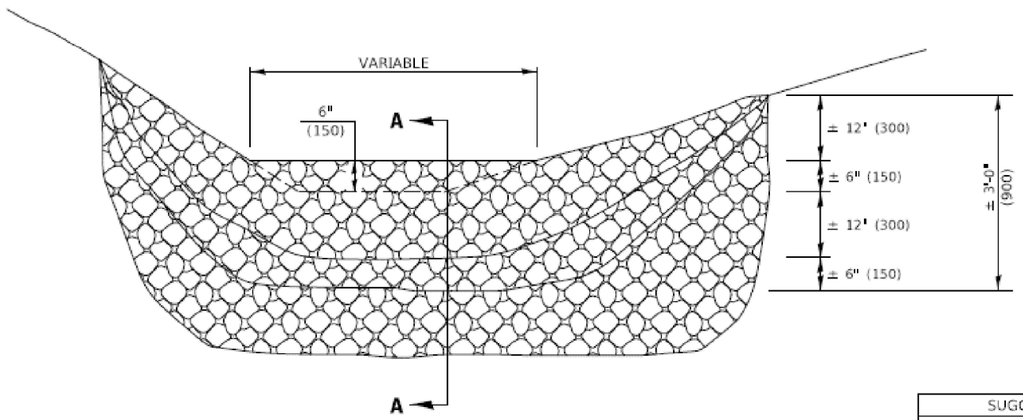

DOWNSTREAM ELEVATION

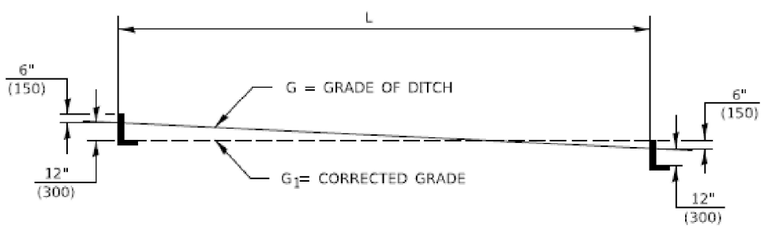

METHOD OF PLACING DITCH CHECKS

SUGGESTED VALUES OF G_1	
TYPE OF SOIL	G_1
COHESIVE SOILS	2.0%
SMALL GRAVEL TO SILT LOAM	1.0%
FINE SAND OR LIGHT SILT	0.5%

L = SPACING OF DITCH CHECKS IN FEET (METERS)
G = GRADE OF DITCH IN %
G_1= GRADE ALLOWABLE FOR SOIL IN %

THEN $L = \frac{1.5 \text{ FEET } (0.45 \text{ m}) \times 100\%}{G - G_1}$

GENERAL NOTES

1. DITCH CHECKS SHALL BE PAID FOR AT THE CONTRACT UNIT PRICE PER EACH FOR "STONE OR RIPRAP DITCH CHECKS", WHICH PRICE SHALL INCLUDE THE FURNISHING AND PLACING OF ALL MATERIALS FOR A COMPLETE INSTALLATION.
2. INDIVIDUAL STONES OR BROKEN CONCRETE SHALL NOT BE LESS THAN 6" (150 mm) IN THEIR SMALLEST DIMENSION.
3. THE STONE RIPRAP SHALL BE BONDED TOGETHER WITH MORTAR CONSISTING OF ONE PART CEMENT TO THREE PARTS OF SAND, WEIGHT MEASUREMENT.

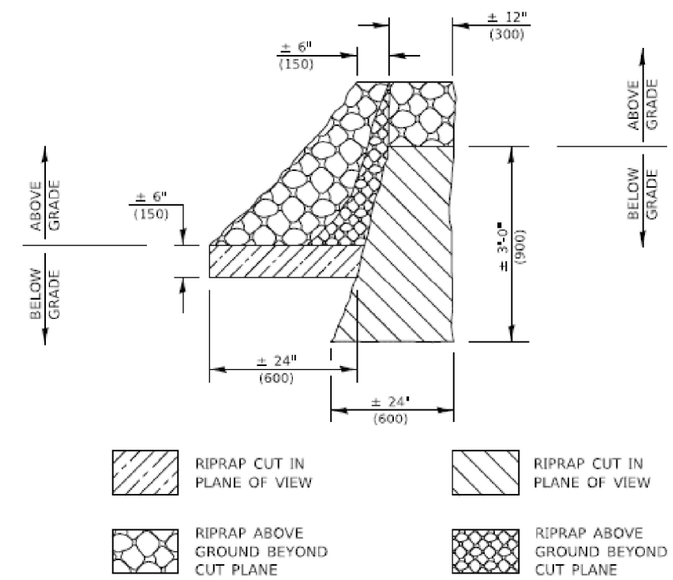

SECTION A–A

Note: All dimensions are in INCHES (millimeters) unless otherwise shown.

DESIGNER NOTE: IF THE PROPOSED LOCATION OF THE DITCH CHECK IS WITHIN THE UNSHIELDED CLEAR ZONE OF THE TRAVELED WAY, OTHER TYPES OF EROSION CONTROL METHODS AND PROCEDURES SHOULD BE ANALYZED AND USED, IF POSSIBLE.

MODELS: I-MODEL-NONE3
FILE NAME: P:\2D\105931 Phase II\I57 under CH17\0_IDOT\CAD_Sheets\D570908-sht-Erosion_Control.dgn

USER NAME = plersonbr	DESIGNED -	REVISED - 11/06	
	DRAWN -	REVISED - 3/6/17 SWN	
PLOT SCALE = 40.2000 ' / in.	CHECKED -	REVISED -	
PLOT DATE = 3/8/2018	DATE -	REVISED -	

STATE OF ILLINOIS
DEPARTMENT OF TRANSPORTATION

RIPRAP DITCH CHECKS

SCALE: SHEET 1 OF 1 SHEETS STA. TO STA.

DISTRICT 5 DETAIL NO. 28102630

F.A. RTE.	SECTION	COUNTY	TOTAL SHEETS	SHEET NO.
		CONTRACT NO.		
	ILLINOIS	FED. AID PROJECT		

MODEL: EnBLc5-Plan 1 [Sheet]
FILE NAME: P:\2D\105931 Phase II\I57 under CH17\0_IDOT\CAD_Sheets\D570908-sht-Erosion_Control.dgn

Kaskaskia Engineering Group, LLC
PROFESSIONAL REGISTRATIONS
Illinois Professional Design Firm 184-001772
Professional Engineering Group 20-3108586

USER NAME = hpapproth	DESIGNED -	REVISED -	
	DRAWN -	REVISED -	
PLOT SCALE = 0.16666633 ' / in.	CHECKED -	REVISED -	
PLOT DATE = 3/22/2023	DATE -	REVISED -	

STATE OF ILLINOIS
DEPARTMENT OF TRANSPORTATION

I-57 UNDER CH17
EROSION CONTROL PLAN

SCALE: SHEET 000 OF SHEETS STA. TO STA.

F.A. RTE.	SECTION	COUNTY	TOTAL SHEETS	SHEET NO.
57	(10-31HB)BR	CHAMPAIGN	65	29
		CONTRACT NO. 70908		
	ILLINOIS	FED. AID PROJECT		

Benchmark: 4903-2 chiseled square on top of SE wing wall
N 1,201,923.23, E 992,750.68, Elev. 711.038 (NAVD 88)

Existing Structure: S.N. 010-0124 carrying Sadorus Road (CH-17) over I-57 was built in 1963 under Contract 22990 as Project I-57-5(28)222, Section (10-31)HB. The structure consists of four spans of a reinforced concrete deck on five 30WF124 steel girders on reinforced concrete piers and open abutments. The abutments are supported on concrete piles. The piers are supported on concrete footings. Back-to-back distance between abutments is 221'-6". The superstructure width is 26'-0" clear between the inside faces of the concrete curbs and 31'-8" out-to-out. The bridge is skewed 1°15'24" Right Forward. Structure to be removed and replaced.

Road closure shall be used during construction. Traffic will be detoured.

All structural steel shall be metallized.

No salvage

DESIGN STRESSES

FIELD UNITS

f'c = 3,500 psi (substructure concrete)
f'c = 4,000 psi (superstructure concrete)
fy = 60,000 psi (Reinforcement)
fy = 50,000 psi (M270 Grade 50)
fy = 36,000 psi (M270 Grade 36)

SEISMIC DATA

Seismic Performance Zone (SPZ) = 1
Design Spectral Acceleration at 1.0 sec. (S_{D1}) = 0.103g
Design Spectral Acceleration at 0.2 sec. (S_{DS}) = 0.194g
Soil Site Class = C

LOADING HL-93

Allow 50#/sq. ft. for future wearing surface.

DESIGN SPECIFICATIONS

2020 AASHTO LRFD Bridge Design Specifications, 9th Edition

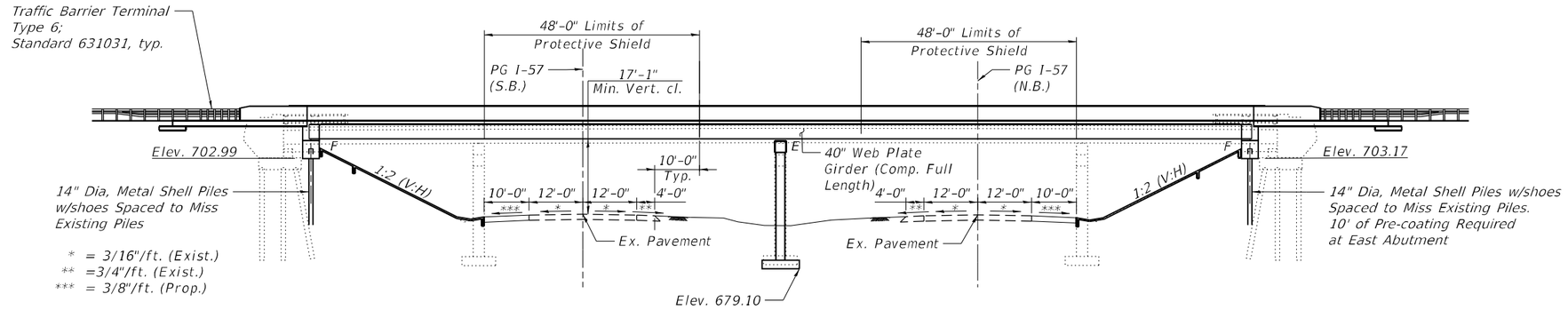

ELEVATION

(Looking North)

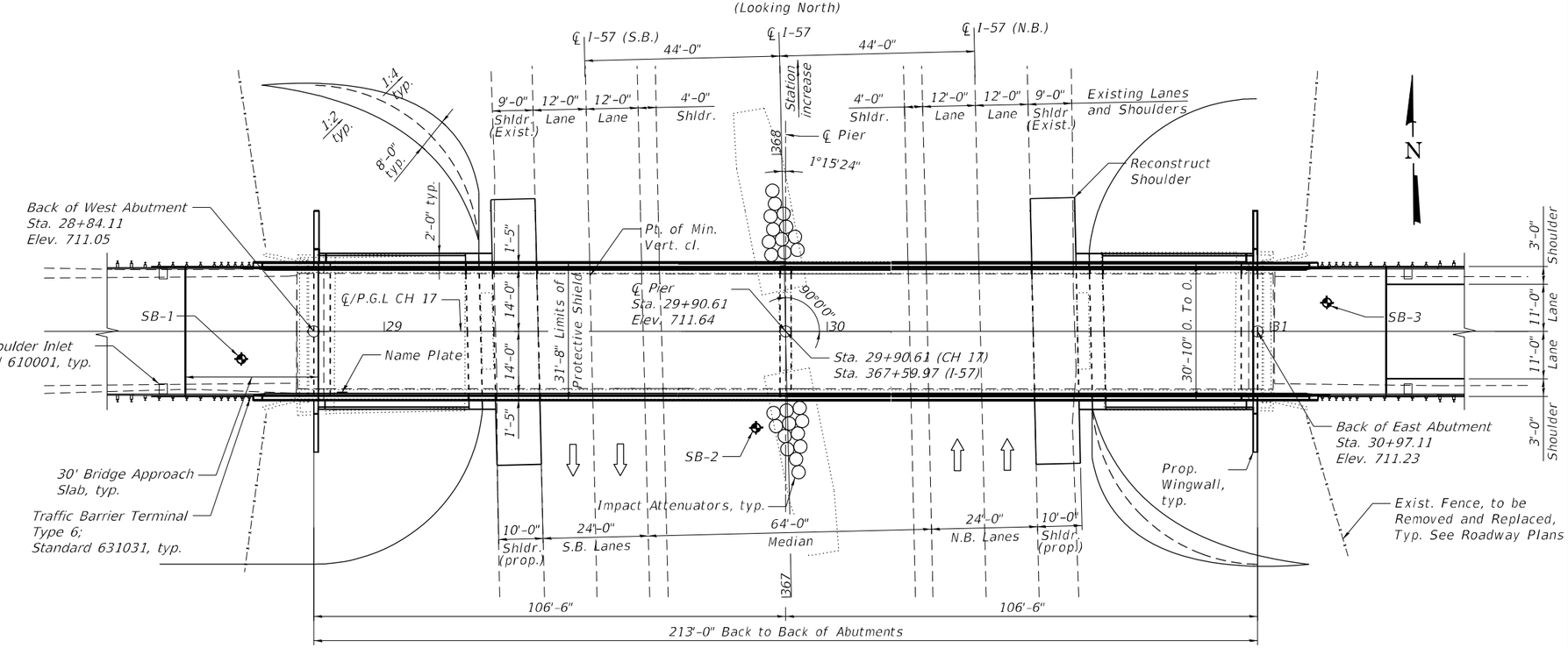

PLAN

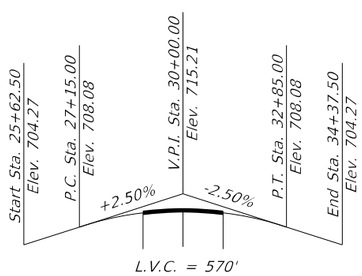

PROFILE GRADE

(F.A.S. 529 - C.H.17 along ℄ Roadway)

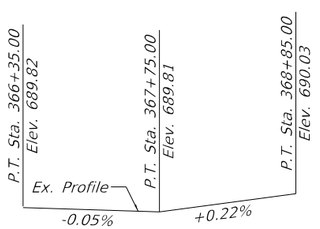

PROFILE GRADE

(F.A.I. Rte. 57 S.B.)

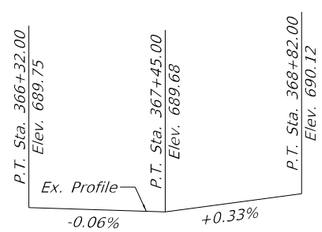

PROFILE GRADE

(F.A.I. Rte. 57 N.B.)

STATE OF ILLINOIS SHAWN T. BRODASKI 81-7569 REGISTERED STRUCTURAL ENGINEER
EXPIRES NOVEMBER 30, 2024
Date: 4-28-2023

SHAWN T. BRODASKI, ILLINOIS S.E. 81-7569
S1-S10 & S16-S22 DESIGN ENGINEER

ILLINOIS SEAN M. MARZANO 081-006321 CHAMPAIGN IL. STRUCTURAL ENGINEER
EXPIRES NOVEMBER 30, 2024
Date: 4-28-2023

SEAN MARZANO, ILLINOIS S.E. 81-6321
S11-S15 DESIGN ENGINEER

APPROVED
For Structural Adequacy Only
Engineer of Bridges & Structures

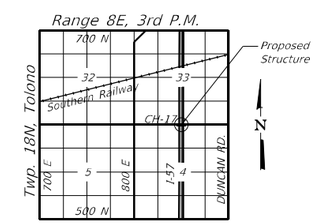

LOCATION SKETCH

GENERAL PLAN AND ELEVATION
CH17 OVER I-57
F.A.I. ROUTE 57
SECTION (10-31HB)BR
CHAMPAIGN COUNTY
STATION 29+90.61
STRUCTURE NO. 010-0295

Ardmore Roderick

USER NAME = nickbrustin	DESIGNED - AS	REVISED -	
	CHECKED - STB	REVISED -	
PLOT SCALE =	DRAWN - AS	REVISED -	
PLOT DATE = 5/4/2023	CHECKED - STB	REVISED -	

STATE OF ILLINOIS
DEPARTMENT OF TRANSPORTATION

SHEET S1 OF S22 SHEETS

F.A.I. RTE.	SECTION	COUNTY	TOTAL SHEETS	SHEET NO.
57	(10-31HB)BR	CHAMPAIGN	65	30
		CONTRACT NO. 70908		

FED. ROAD DIST. NO. 5 | ILLINOIS | FED. AID PROJECT

MODEL:
FILE NAME: T:\TRG\Business\Clients\IDOT\Projects\20-040 PTB 195-041 I-57 Bridge\400 CADD\CAD_Sheets\20-040-GP01.dgn

GENERAL NOTES:

1. Fasteners shall be ASTM F3125 grade A325 Type 1, hot dipped galvanized bolts in metalized areas. Bolts 7/8" diameter, holes 15/16" diameter, unless otherwise noted. See special provisions for "Metalizing of Structural Steel"
2. Calculated weight of Structural Steel = 14,030 (M270 Grade 36)
   = 232,030 (M270 Grade 50)
3. No Field welding is permitted except as specified in the contract documents.
4. Reinforcement bars designated (E) shall be epoxy coated.
5. Bearing seat surfaces shall be constructed or adjusted to the designated elevations within a tolerance of 1/8 inch (0.01 ft.). Adjustment shall be made either by grinding the surface or by shimming the bearings.
6. The existing structural steel coating contains lead. The Contractor shall take appropriate precautions address the presence of lead on this project.
7. The embankment configuration shown shall be the minimum that must be placed and compacted prior to construction of the abutments..
8. All Structural steel shall be metalized unless noted otherwise. Steel components of bearings shall be galvanized as noted. See Special Provision for "Metalizing of Structural Steel".
9. Slopewall shall be reinforced with welded wire fabric. 6 in. x 6 in. – W4.0 x W4.0 weighing 58 lbs. per 100 sq. ft.
10. Slipforming of parapets shall not be allowed.
11. All metalized structural steel shall be shop painted with System 1. See Special Provision for "Metalizing of Structural Steel".

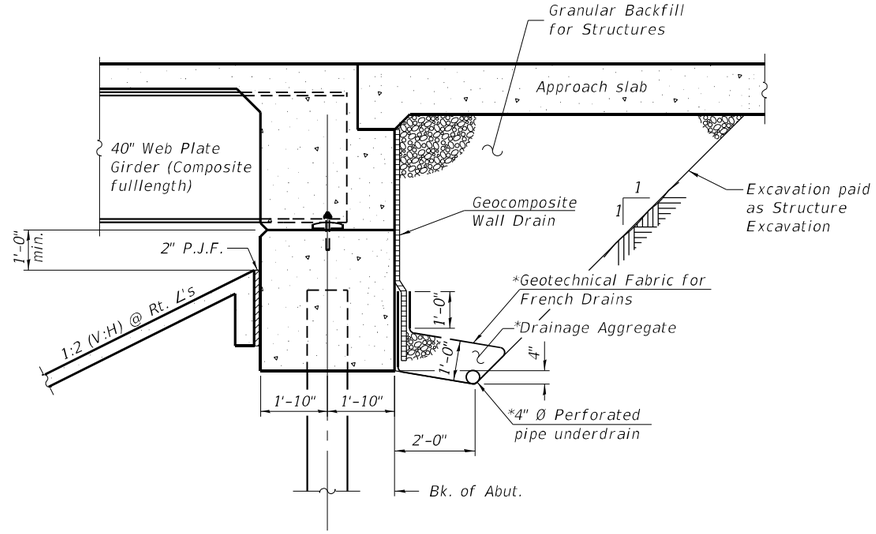

SECTION THRU INTEGRAL ABUTMENT

(Horiz. dim @ Rt. ℄s)

* Included in the cost of pipe underdrains for Structures, 4"

All drainage system components shall extend to 2'-0" from the end of each wingwall except an outlet pipe shall extend until intersecting with the side slopes. The pipes shall drain into concrete headwalls. (See Article 601.05 of the Standard Specifications and Highway Standard 601101).

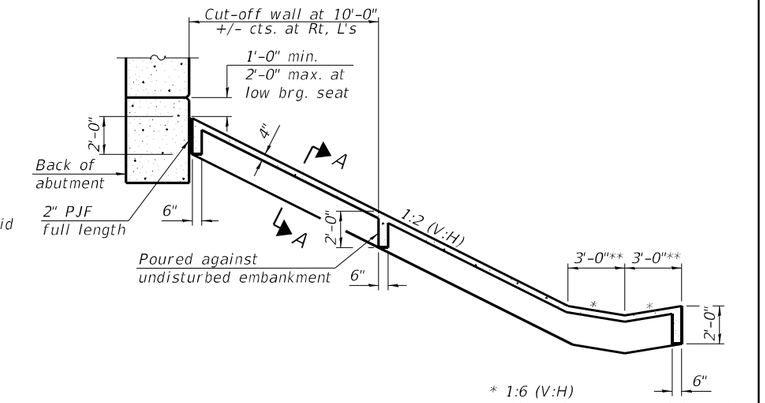

SECTION THRU CONCRETE SLOPEWALL

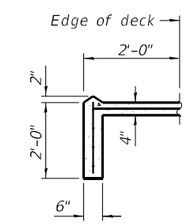

SECTION A-A

TOTAL BILL OF MATERIAL

ITEM	UNIT	SUPER	SUB	TOTAL
Removal of Existing Structures	EACH	-	-	1
Protective Shield	SQ YD	-	338	338
Structure Excavation	CU YD	-	270	270
Concrete Structures	CU YD	-	174	174
Concrete Superstructure	CU YD	262.4	-	262.4
Bridge Deck Grooving	SQ YD	783	-	783
Protective Coat	SQ.YD	1,053	-	1,053
Concrete Superstructure (Approach Slab)	CU YD	83.7	-	83.7
Furnishing and Erecting Structural Steel	L SUM	1	-	1
Stud Shear Connectors	EACH	2,484	-	2,484
Reinforcement Bars, Epoxy Coated	POUND	93,440	22,750	116,190
Mechanical Splicers	EACH	-	60	60
Slope Wall 4 Inch	SQ YD	-	319	319
Furnishing Metal Shell Piles 14" x 0.312"	FOOT	-	515	515
Driving Piles	FOOT	-	515	515
Test Pile Metal Shells	EACH	-	2	2
Pile Shoes	EACH	-	12	12
Name Plates	EACH	1	-	1
Elastomeric Bearing Assembly, Type 1	EACH	-	6	6
Anchor Bolts, 1"	EACH	-	36	36
Granular Backfill for Structures	CU YD	-	124	124
Geocomposite Wall Drain	SQ YD	-	58	58
Pipe Underdrain for Structures 4"	FOOT	-	128	128

INDEX OF SHEETS

STATION 29+90.61
BUILT 20__ BY
STATE OF ILLINOIS
F.A.I. RT. 57
SEC. (10-31HB)BR
LOADING HL-93
STR. NO. 010-0295

NAME PLATE

(See Std. 515001)

LIST OF ABBREVIATIONS

℄	Baseline	req'd	Required	min.	Minimum
℄	Centerline	sect.	Section	O.F.	Outside Face
const.	Construction	spec.	Specification	prop.	Proposed
conc.	Concrete	std.	Standard	rte.	Route
cts.	Centers	typ.	Typical	RET.	Retaining Wall
E.F.	Each Face	B.F.	Back Face	spa.	Spaces
exist.	Existing	cl.	Clearance	sta.	Station
F.F.	Front Face	○	Diameter	struct.	Structure
jt.	Joint	elev.	Elevation	ℙ	Plate
max.	Maximum	℉	Flow Line	o.c.	On Center
no.	Number	I.F.	Inside Face	U.N.	Unless Noted
PG	Profile Grade	long.	Longitudinal		

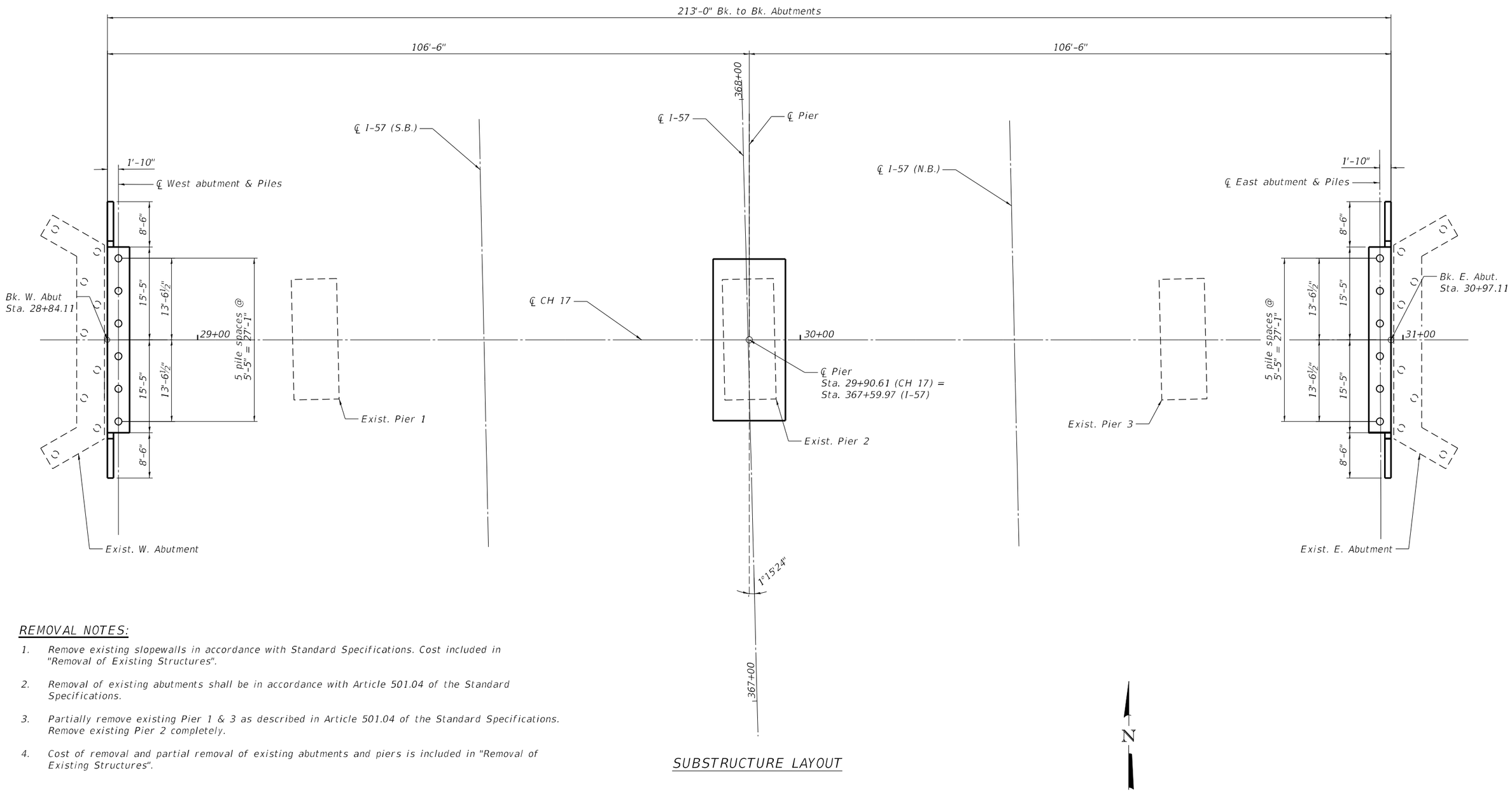

REMOVAL NOTES:

1. Remove existing slopewalls in accordance with Standard Specifications. Cost included in "Removal of Existing Structures".
2. Removal of existing abutments shall be in accordance with Article 501.04 of the Standard Specifications.
3. Partially remove existing Pier 1 & 3 as described in Article 501.04 of the Standard Specifications. Remove existing Pier 2 completely.
4. Cost of removal and partial removal of existing abutments and piers is included in "Removal of Existing Structures".

SUBSTRUCTURE LAYOUT

MODEL:
FILE NAME: T:\TRG\Business\Clients\IDOT\Projects\20-040 PPB 195-041 I-57 Bridge\400 CADD\CAD_Sheets\20-040 Footing Layout.dgn

Ardmore Roderick

USER NAME = nickbrustin	DESIGNED - NMB	REVISED -	
	CHECKED - STB	REVISED -	
PLOT SCALE =	DRAWN - NMB	REVISED -	
PLOT DATE = 5/4/2023	CHECKED - STB	REVISED -	

STATE OF ILLINOIS
DEPARTMENT OF TRANSPORTATION

SUBSTRUCTURE LAYOUT
STRUCTURE NO. 010-0295

SHEET S3 OF S22 SHEETS

F.A.I. RTE.	SECTION	COUNTY	TOTAL SHEETS	SHEET NO.
57	(10-31HB)BR	CHAMPAIGN	65	32
		CONTRACT NO. 70908		
FED. ROAD DIST. NO. 5	ILLINOIS	FED. AID PROJECT		

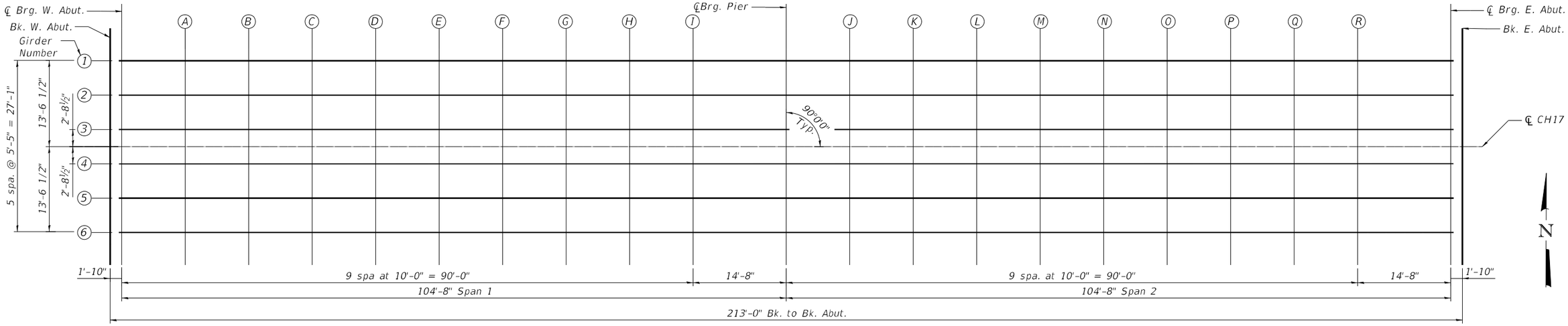

PLAN

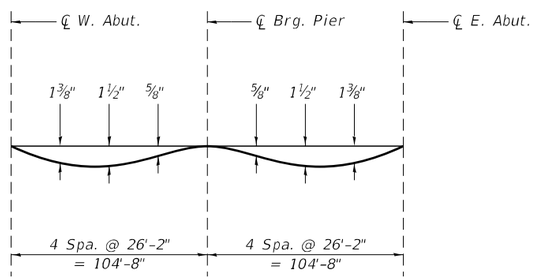

DEAD LOAD DEFLECTION DIAGRAM

(Includes weight of concrete only)
The above deflections are not to be used in the field if the engineer is working from the grade elevations adjusted for dead load deflections as shown on this sheet and sheet 5 of 22.

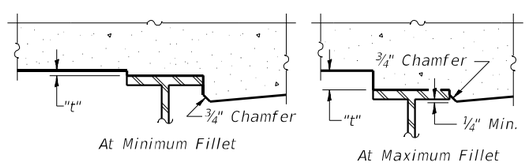

To determine "t": After all structural steel has been erected, elevations of the top flanges of the beams shall be taken at intervals shown above. These elevations subtracted from the "Theoretical Grade Elevations Adjusted for Dead Load Deflection" shown right and on sheet S-5, minus slab thickness, equals the fillet heights "t" above top flange of beams.

FILLET HEIGHTS

GIRDER 1

LOCATION	STATION	OFFSET	THEORETICAL GRADE ELEVATIONS	THEORETICAL GRADE ELEVATIONS ADJUSTED FOR DEAD LOAD DEFLECTION
BK. W. ABUT.	28+84.11	-13.54	710.84	710.84
℄ BRG. W. ABUT.	28+85.94	-13.54	710.86	710.86
A	28+95.94	-13.54	710.95	711.01
B	29+05.94	-13.54	711.04	711.14
C	29+15.94	-13.54	711.12	711.24
D	29+25.94	-13.54	711.19	711.32
E	29+35.94	-13.54	711.25	711.38
F	29+45.94	-13.54	711.30	711.41
G	29+55.94	-13.54	711.34	711.42
H	29+65.94	-13.54	711.38	711.42
I	29+75.94	-13.54	711.40	711.42
℄BRG. PIER	29+90.61	-13.54	711.43	711.43
J	30+00.61	-13.54	711.43	711.44
K	30+10.61	-13.54	711.42	711.46
L	30+20.61	-13.54	711.41	711.47
M	30+30.61	-13.54	711.39	711.48
N	30+40.61	-13.54	711.36	711.48
O	30+50.61	-13.54	711.32	711.45
P	30+60.61	-13.54	711.27	711.40
Q	30+70.61	-13.54	711.21	711.32
R	30+80.61	-13.54	711.14	711.22
℄ BRG. E. ABUT.	30+95.27	-13.54	711.03	711.03
BK. E. ABUT.	30+97.11	-13.54	711.02	711.02

GIRDER 2

LOCATION	STATION	OFFSET	THEORETICAL GRADE ELEVATIONS	THEORETICAL GRADE ELEVATIONS ADJUSTED FOR DEAD LOAD DEFLECTION
BK. W. ABUT.	28+84.11	-8.12	710.93	710.93
℄ BRG. W. ABUT.	28+85.94	-8.12	710.95	710.95
A	28+95.94	-8.12	711.05	711.10
B	29+05.94	-8.12	711.13	711.23
C	29+15.94	-8.12	711.21	711.34
D	29+25.94	-8.12	711.28	711.42
E	29+35.94	-8.12	711.34	711.47
F	29+45.94	-8.12	711.39	711.50
G	29+55.94	-8.12	711.44	711.52
H	29+65.94	-8.12	711.47	711.52
I	29+75.94	-8.12	711.50	711.52
℄BRG. PIER	29+90.61	-8.12	711.52	711.52
J	30+00.61	-8.12	711.52	711.53
K	30+10.61	-8.12	711.52	711.55
L	30+20.61	-8.12	711.50	711.57
M	30+30.61	-8.12	711.48	711.58
N	30+40.61	-8.12	711.45	711.57
O	30+50.61	-8.12	711.41	711.54
P	30+60.61	-8.12	711.36	711.49
Q	30+70.61	-8.12	711.30	711.41
R	30+80.61	-8.12	711.24	711.31
℄ BRG. E. ABUT.	30+95.27	-8.12	711.12	711.12
BK. E. ABUT.	30+97.11	-8.12	711.11	711.11

GIRDER 3

LOCATION	STATION	OFFSET	THEORETICAL GRADE ELEVATIONS	THEORETICAL GRADE ELEVATIONS ADJUSTED FOR DEAD LOAD DEFLECTION
BK. W. ABUT.	28+84.11	-2.71	711.01	711.01
℄ BRG. W. ABUT.	28+85.94	-2.71	711.03	711.03
A	28+95.94	-2.71	711.13	711.18
B	29+05.94	-2.71	711.22	711.31
C	29+15.94	-2.71	711.29	711.42
D	29+25.94	-2.71	711.36	711.50
E	29+35.94	-2.71	711.42	711.55
F	29+45.94	-2.71	711.48	711.58
G	29+55.94	-2.71	711.52	711.60
H	29+65.94	-2.71	711.55	711.60
I	29+75.94	-2.71	711.58	711.60
℄BRG. PIER	29+90.61	-2.71	711.60	711.60
J	30+00.61	-2.71	711.60	711.61
K	30+10.61	-2.71	711.60	711.63
L	30+20.61	-2.71	711.59	711.65
M	30+30.61	-2.71	711.56	711.66
N	30+40.61	-2.71	711.53	711.65
O	30+50.61	-2.71	711.49	711.63
P	30+60.61	-2.71	711.44	711.57
Q	30+70.61	-2.71	711.39	711.50
R	30+80.61	-2.71	711.32	711.39
℄ BRG. E. ABUT.	30+95.27	-2.71	711.21	711.21
BK. E. ABUT.	30+97.11	-2.71	711.19	711.19

℄ CH 17 & PGL

LOCATION	STATION	OFFSET	THEORETICAL GRADE ELEVATIONS	THEORETICAL GRADE ELEVATIONS ADJUSTED FOR DEAD LOAD DEFLECTION
BK. W. ABUT.	28+84.11	0.00	711.06	711.06
℄ BRG. W. ABUT.	28+85.94	0.00	711.07	711.07
A	28+95.94	0.00	711.17	711.22
B	29+05.94	0.00	711.26	711.35
C	29+15.94	0.00	711.33	711.46
D	29+25.94	0.00	711.40	711.54
E	29+35.94	0.00	711.46	711.59
F	29+45.94	0.00	711.52	711.62
G	29+55.94	0.00	711.56	711.64
H	29+65.94	0.00	711.59	711.64
I	29+75.94	0.00	711.62	711.64
℄BRG. PIER	29+90.61	0.00	711.64	711.64
J	30+00.61	0.00	711.64	711.65
K	30+10.61	0.00	711.64	711.67
L	30+20.61	0.00	711.63	711.69
M	30+30.61	0.00	711.60	711.70
N	30+40.61	0.00	711.57	711.69
O	30+50.61	0.00	711.53	711.67
P	30+60.61	0.00	711.48	711.61
Q	30+70.61	0.00	711.43	711.54
R	30+80.61	0.00	711.36	711.43
℄ BRG. E. ABUT.	30+95.27	0.00	711.25	711.25
BK. E. ABUT.	30+97.11	0.00	711.23	711.23

GIRDER 4

LOCATION	STATION	OFFSET	THEORETICAL GRADE ELEVATIONS	THEORETICAL GRADE ELEVATIONS ADJUSTED FOR DEAD LOAD DEFLECTION
BK. W. ABUT.	28+84.11	2.71	711.01	711.01
℄ BRG. W. ABUT.	28+85.94	2.71	711.03	711.03
A	28+95.94	2.71	711.13	711.18
B	29+05.94	2.71	711.22	711.31
C	29+15.94	2.71	711.29	711.42
D	29+25.94	2.71	711.36	711.50
E	29+35.94	2.71	711.42	711.55
F	29+45.94	2.71	711.48	711.58
G	29+55.94	2.71	711.52	711.60
H	29+65.94	2.71	711.55	711.60
I	29+75.94	2.71	711.58	711.60
℄BRG. PIER	29+90.61	2.71	711.60	711.60
J	30+00.61	2.71	711.60	711.61
K	30+10.61	2.71	711.60	711.63
L	30+20.61	2.71	711.59	711.65
M	30+30.61	2.71	711.56	711.66
N	30+40.61	2.71	711.53	711.65
O	30+50.61	2.71	711.49	711.63
P	30+60.61	2.71	711.44	711.57
Q	30+70.61	2.71	711.39	711.50
R	30+80.61	2.71	711.32	711.39
℄ BRG. E. ABUT.	30+95.27	2.71	711.21	711.21
BK. E. ABUT.	30+97.11	2.71	711.19	711.19

GIRDER 5

LOCATION	STATION	OFFSET	THEORETICAL GRADE ELEVATIONS	THEORETICAL GRADE ELEVATIONS ADJUSTED FOR DEAD LOAD DEFLECTION
BK. W. ABUT.	28+84.11	8.13	710.93	710.93
℄ BRG. W. ABUT.	28+85.94	8.13	710.95	710.95
A	28+95.94	8.13	711.05	711.10
B	29+05.94	8.13	711.13	711.23
C	29+15.94	8.13	711.21	711.34
D	29+25.94	8.13	711.28	711.42
E	29+35.94	8.13	711.34	711.47
F	29+45.94	8.13	711.39	711.50
G	29+55.94	8.13	711.44	711.52
H	29+65.94	8.13	711.47	711.52
I	29+75.94	8.13	711.50	711.52
℄BRG. PIER	29+90.61	8.13	711.52	711.52
J	30+00.61	8.13	711.52	711.53
K	30+10.61	8.13	711.52	711.55
L	30+20.61	8.13	711.50	711.57
M	30+30.61	8.13	711.48	711.58
N	30+40.61	8.13	711.45	711.57
O	30+50.61	8.13	711.41	711.54
P	30+60.61	8.13	711.36	711.49
Q	30+70.61	8.13	711.30	711.41
R	30+80.61	8.13	711.24	711.31
℄ BRG. E. ABUT.	30+95.27	8.13	711.12	711.12
BK. E. ABUT.	30+97.11	8.13	711.11	711.11

GIRDER 6

LOCATION	STATION	OFFSET	THEORETICAL GRADE ELEVATIONS	THEORETICAL GRADE ELEVATIONS ADJUSTED FOR DEAD LOAD DEFLECTION
BK. W. ABUT.	28+84.11	13.54	710.84	710.84
℄ BRG. W. ABUT.	28+85.94	13.54	710.86	710.86
A	28+95.94	13.54	710.95	711.01
B	29+05.94	13.54	711.04	711.14
C	29+15.94	13.54	711.12	711.24
D	29+25.94	13.54	711.19	711.32
E	29+35.94	13.54	711.25	711.38
F	29+45.94	13.54	711.30	711.41
G	29+55.94	13.54	711.34	711.42
H	29+65.94	13.54	711.38	711.42
I	29+75.94	13.54	711.40	711.42
℄BRG. PIER	29+90.61	13.54	711.43	711.43
J	30+00.61	13.54	711.43	711.44
K	30+10.61	13.54	711.42	711.46
L	30+20.61	13.54	711.41	711.47
M	30+30.61	13.54	711.39	711.48
N	30+40.61	13.54	711.36	711.48
O	30+50.61	13.54	711.32	711.45
P	30+60.61	13.54	711.27	711.40
Q	30+70.61	13.54	711.21	711.32
R	30+80.61	13.54	711.14	711.22
℄ BRG. E. ABUT.	30+95.27	13.54	711.03	711.03
BK. E. ABUT.	30+97.11	13.54	711.02	711.02

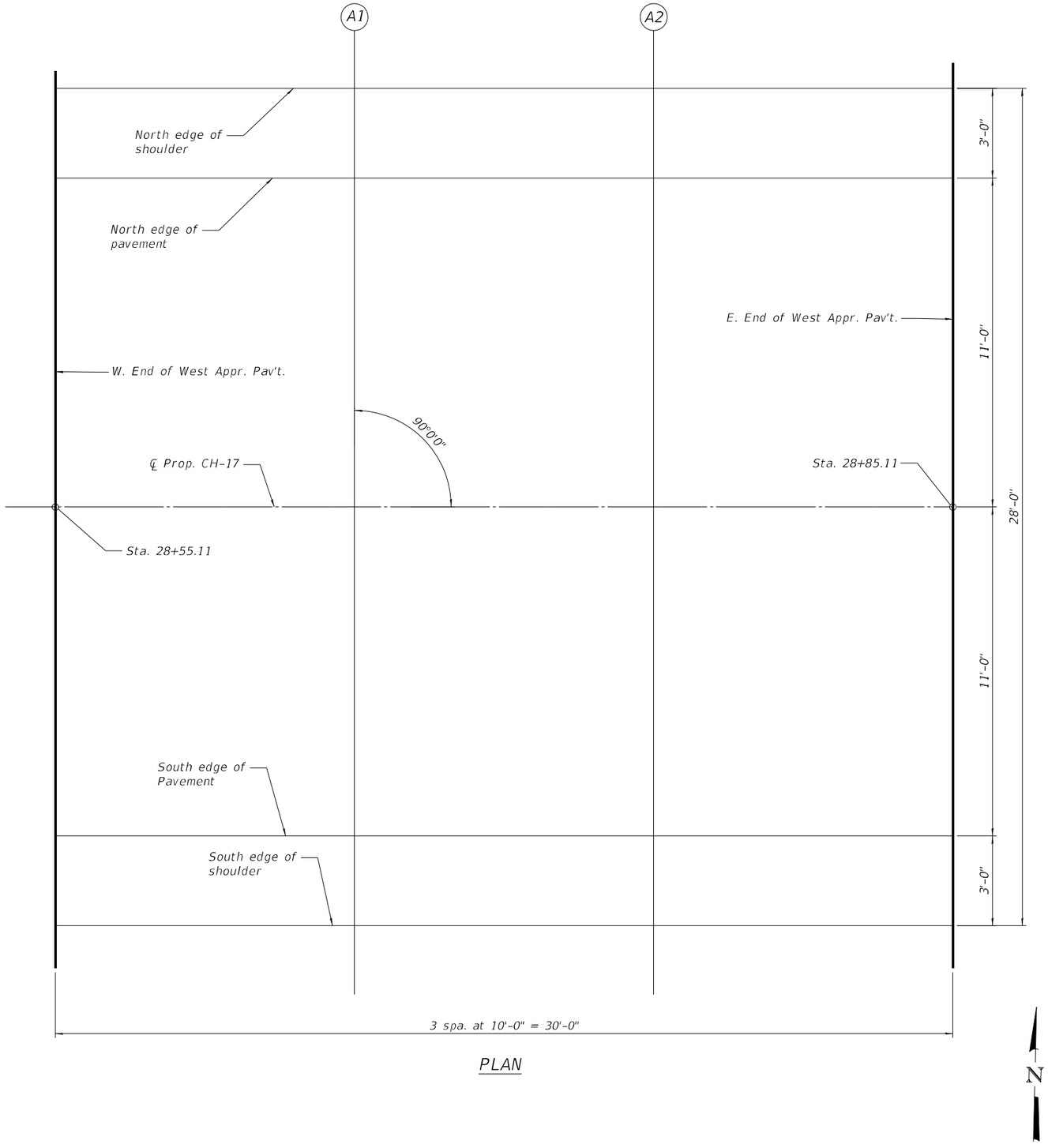

PLAN

N. EDGE OF SHOULDER

LOCATION	STATION	OFFSET	THEORETICAL GRADE ELEVATIONS
W. END W. APPR. PAV'T.	28+55.11	-14.00	710.50
A1	28+65.11	-14.00	710.62
A2	28+75.11	-14.00	710.74
E. END W. APPR. PAV'T.	28+85.11	-14.00	710.84

N. EDGE OF PAVEMENT

LOCATION	STATION	OFFSET	THEORETICAL GRADE ELEVATIONS
W. END W. APPR. PAV'T.	28+55.11	-11.00	710.56
A1	28+65.11	-11.00	710.68
A2	28+75.11	-11.00	710.80
E. END W. APPR. PAV'T.	28+85.11	-11.00	710.90

℄ PROP. CH-17

LOCATION	STATION	OFFSET	THEORETICAL GRADE ELEVATIONS
W. END W. APPR. PAV'T.	28+55.11	0.00	710.72
A1	28+65.11	0.00	710.85
A2	28+75.11	0.00	710.96
E. END W. APPR. PAV'T.	28+85.11	0.00	711.07

S. EDGE OF PAVEMENT

LOCATION	STATION	OFFSET	THEORETICAL GRADE ELEVATIONS
W. END W. APPR. PAV'T.	28+55.11	11.00	710.56
A1	28+65.11	11.00	710.68
A2	28+75.11	11.00	710.80
E. END W. APPR. PAV'T.	28+85.11	11.00	710.90

S. EDGE OF SHOULDER

LOCATION	STATION	OFFSET	THEORETICAL GRADE ELEVATIONS
W. END W. APPR. PAV'T.	28+55.11	14.00	710.50
A1	28+65.11	14.00	710.62
A2	28+75.11	14.00	710.74
E. END W. APPR. PAV'T.	28+85.11	14.00	710.84

N. EDGE OF SHOULDER

LOCATION	STATION	OFFSET	THEORETICAL GRADE ELEVATIONS
W. END E. APPR. PAV'T.	30+96.11	-14.00	711.01
A3	31+06.11	-14.00	710.93
A4	31+16.11	-14.00	710.83
E. END E. APPR. PAV'T.	31+26.11	-14.00	710.72

N. EDGE OF PAVEMENT

LOCATION	STATION	OFFSET	THEORETICAL GRADE ELEVATIONS
W. END E. APPR. PAV'T.	30+96.11	-11.00	711.07
A3	31+06.11	-11.00	710.99
A4	31+16.11	-11.00	710.89
E. END E. APPR. PAV'T.	31+26.11	-11.00	710.78

℄ PROP. CH-17

LOCATION	STATION	OFFSET	THEORETICAL GRADE ELEVATIONS
W. END E. APPR. PAV'T.	30+96.11	0.00	711.24
A3	31+06.11	0.00	711.15
A4	31+16.11	0.00	711.05
E. END E. APPR. PAV'T.	31+26.11	0.00	710.95

S. EDGE OF PAVEMENT

LOCATION	STATION	OFFSET	THEORETICAL GRADE ELEVATIONS
W. END E. APPR. PAV'T.	30+96.11	11.00	711.07
A3	31+06.11	11.00	710.99
A4	31+16.11	11.00	710.89
E. END E. APPR. PAV'T.	31+26.11	11.00	710.78

S. EDGE OF SHOULDER

LOCATION	STATION	OFFSET	THEORETICAL GRADE ELEVATIONS
W. END E. APPR. PAV'T.	30+96.11	14.00	711.01
A3	31+06.11	14.00	710.93
A4	31+16.11	14.00	710.83
E. END E. APPR. PAV'T.	31+26.11	14.00	710.72

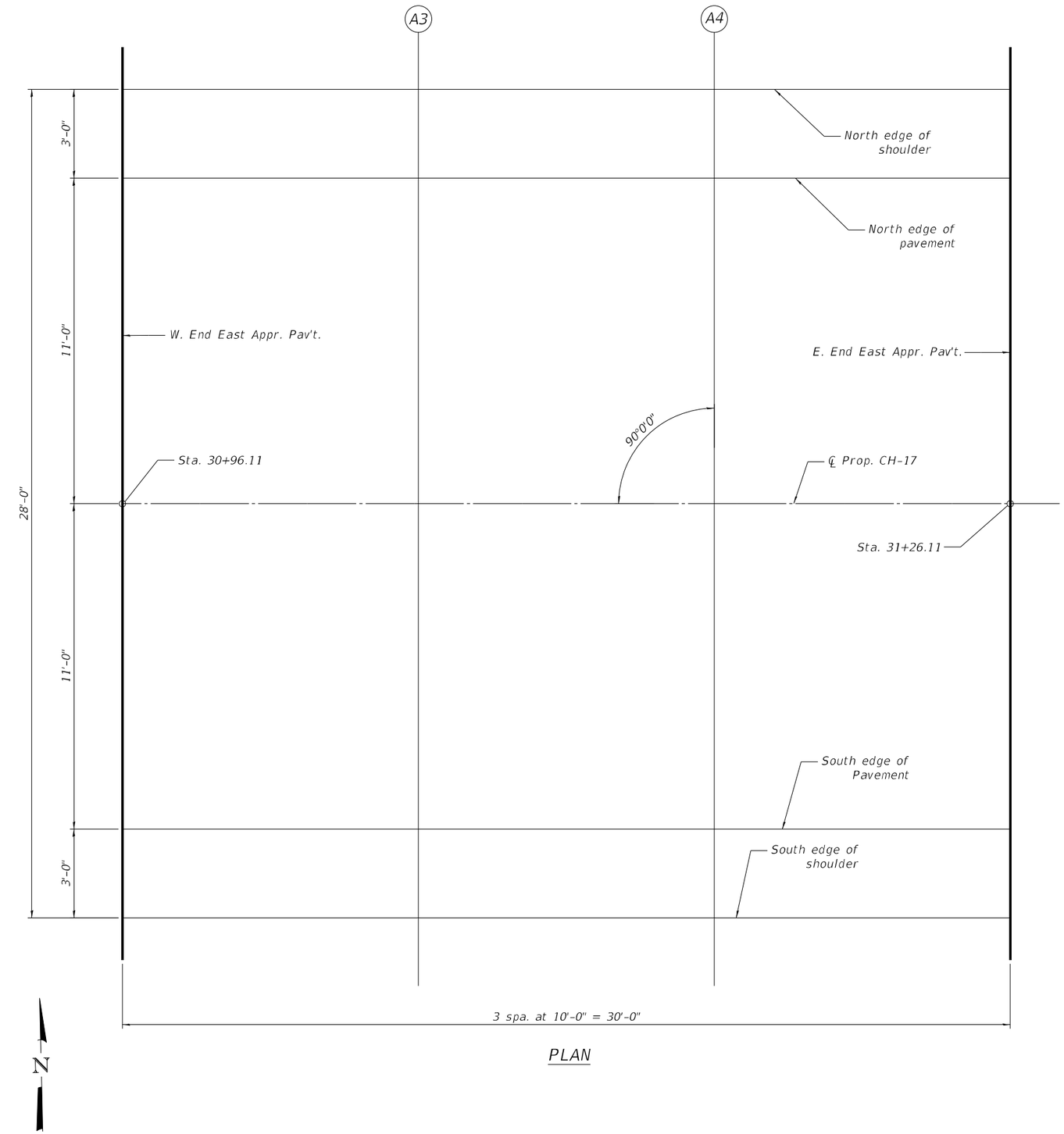

PLAN

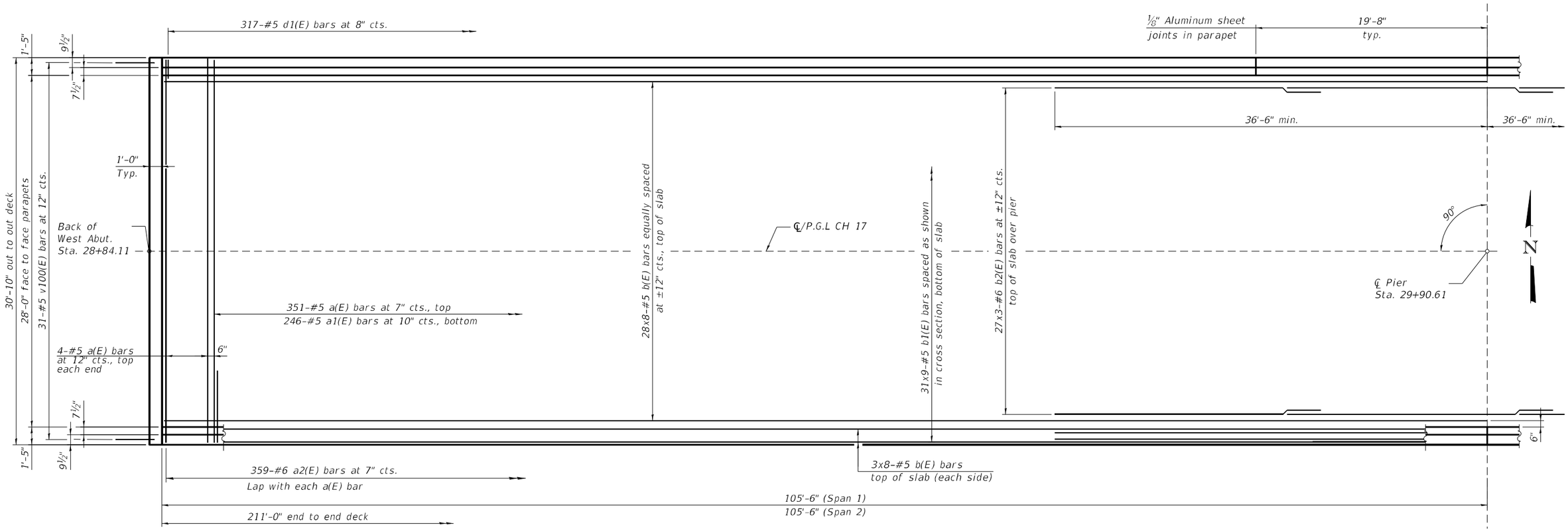

PARTIAL PLAN

(Symmetrical about ℄ Pier)
(Span 1 shown, Span 2 similar)

MINIMUM BAR LAP

#5 bar = 3'-6"
#6 bar = 4'-5"

NOTES:

1. See sheet S-09 for superstructure details and bill of materials.
2. Bars indicated thus 20 x 3-#5 etc. indicates 20 lines of bars with 3 lengths per line.

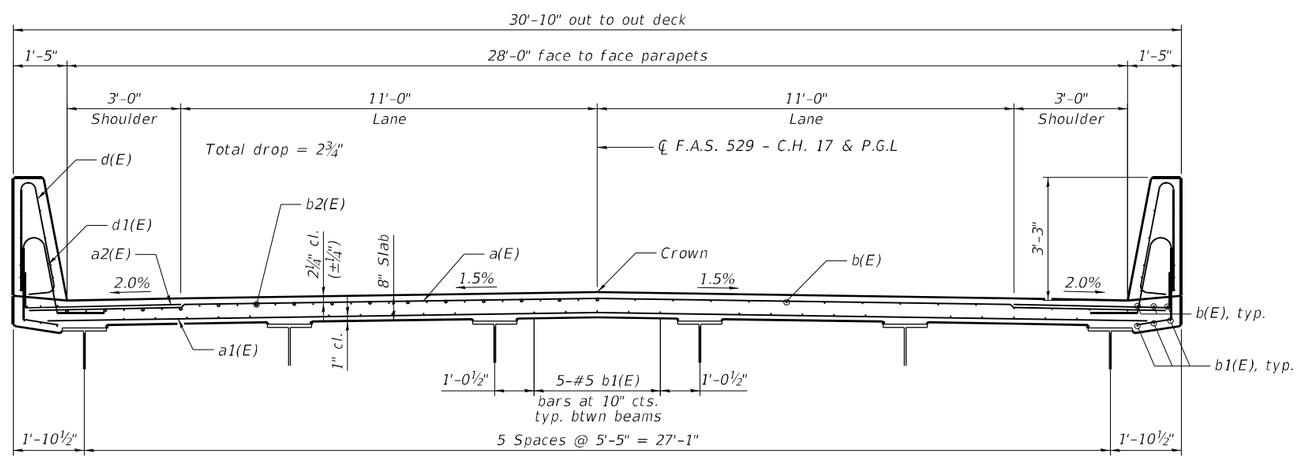

NEAR PIER

CROSS SECTION

(LOOKING EAST)

NEAR MIDSPAN

MODEL:
FILE NAME: T:\TRGBusiness\Clients\IDOT\Projects\20-040 PTB 195-041 I-57 Bridge\400 CADD\CAD Sheets\20-040-SuperSt. Plan&Section.dgn

Ardmore Roderick

USER NAME = nickbrustin	DESIGNED - AS	REVISED -	
	CHECKED - STB	REVISED -	
PLOT SCALE =	DRAWN - AS	REVISED -	
PLOT DATE = 5/4/2023	CHECKED - STB	REVISED -	

STATE OF ILLINOIS
DEPARTMENT OF TRANSPORTATION

SUPERSTRUCTURE PLAN AND SECTION
STRUCTURE NO. 010-0295

SHEET S8 OF S22 SHEETS

F.A.I. RTE.	SECTION	COUNTY	TOTAL SHEETS	SHEET NO.
57	(10-31HB)BR	CHAMPAIGN	65	37
		CONTRACT NO. 70908		
FED. ROAD DIST. NO. 5	ILLINOIS	FED. AID PROJECT		

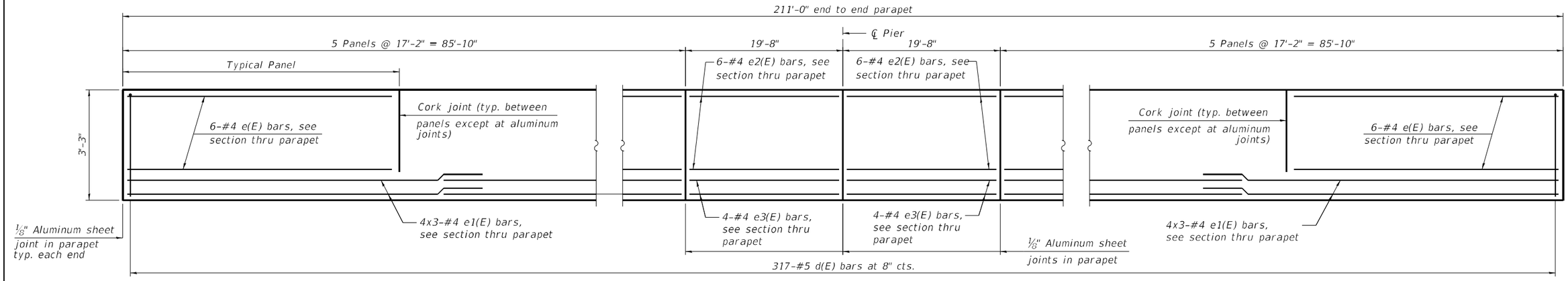

INSIDE ELEVATION OF PARAPET

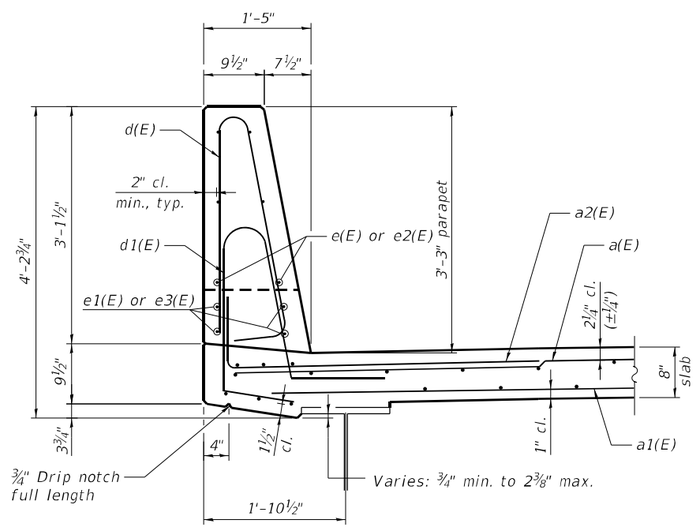

SECTION THRU PARAPET

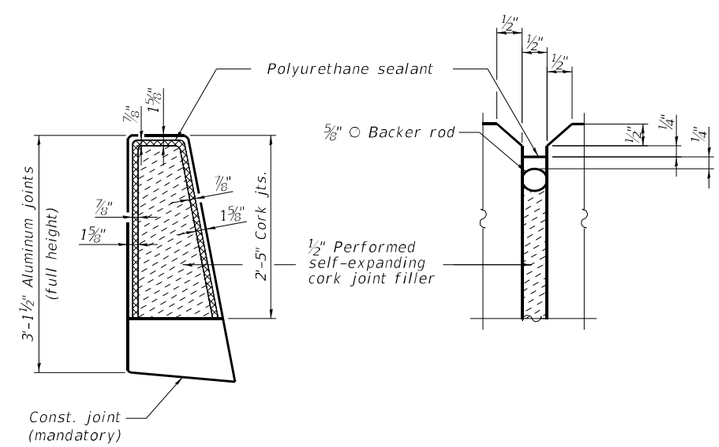

PARAPET JOINT DETAILS

NOTES:

1. The 1/8" aluminum sheet shall be ASTM B209 alloy 3003-H14 and coated to minimize reaction with wet concrete. Cost included with Concrete Superstructure.
2. The polyurethane sealant shall be according to Article 1050.04 of the Std. Spec. and color shall be gray.
3. Headed bars shall conform to ASTM A970 with threaded attachement; Class HA; and reinforcement bars conforming to ASTM A706. Cost included with Reinforcement Bars, Epoxy Coated.
4. Reinforcement bars shall not pass through aluminum sheets and cork joint filler.

SUPERSTRUCTURE BILL OF MATERIAL

Bar	No.	Size	Length	Shape
a(E)	359	#5	30'-6"	
a1(E)	246	#5	30'-6"	
a2(E)	718	#6	8'-4"	
b(E)	272	#5	29'-5"	
b1(E)	279	#5	26'-7"	
b2(E)	81	#6	27'-5"	
d(E)	634	#5	6'-5"	
d1(E)	634	#5	7'-1"	
e(E)	120	#4	16'-10"	
e1(E)	48	#4	30'-4"	
e2(E)	24	#4	19'-4"	
e3(E)	16	#4	19'-4"	
m10(E)	10	#6	30'-6"	
m11(E)	40	#6	5'-1"	
m12(E)	16	#6	1'-6"	
s10(E)	62	#5	9'-2"	
s11(E)	62	#5	11'-8"	
v100(E)	62	#5	3'-1"	
Reinforcement Bars, Epoxy Coated			Pound	61,770
Concrete Superstructure			Cu. Yd.	254.5

Bars indicated thus 1 x 4 -#5 etc. indicates 1 line of bars with 4 lengths per line.

MINIMUM BAR LAP

#4 Bar = 2'-8"

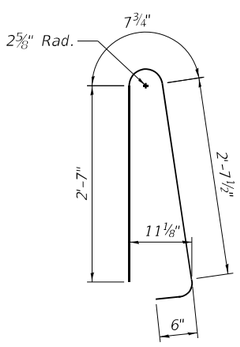

BAR d(E)

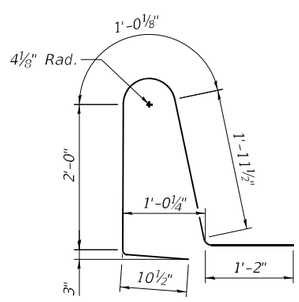

BAR d1(E)

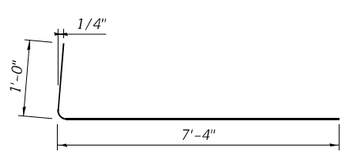

BAR a2(E)

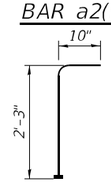

BAR v100(E)
(Headed)

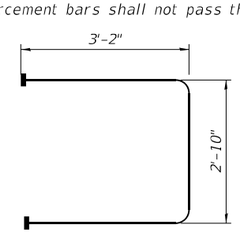

BAR s10(E)
(Headed)

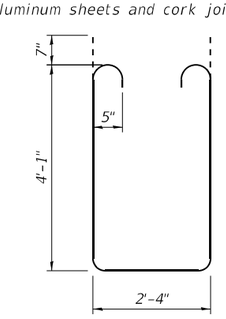

BAR s11(E)

Ardmore Roderick	USER NAME = nickbrustin	DESIGNED - AS	REVISED -
		CHECKED - STB	REVISED -
	PLOT SCALE =	DRAWN - AS	REVISED -
	PLOT DATE = 5/4/2023	CHECKED - STB	REVISED -

STATE OF ILLINOIS
DEPARTMENT OF TRANSPORTATION

SUPERSTRUCTURE DETAILS
STRUCTURE NO. 010-0295

SHEET S9 OF S22 SHEETS

F.A.I. RTE.	SECTION	COUNTY	TOTAL SHEETS	SHEET NO.
57	(10-31HB)BR	CHAMPAIGN	65	38
		CONTRACT NO. 70908		
FED. ROAD DIST. NO. 5	ILLINOIS	FED. AID PROJECT		

MODEL:
FILE NAME: T:\TRG\Business\Clients\IDOT\Projects\20-040 PTB 195-041 I-57 Bridge\400 CADD\CAD_Sheets\20-040-Superstructure Details.dgn

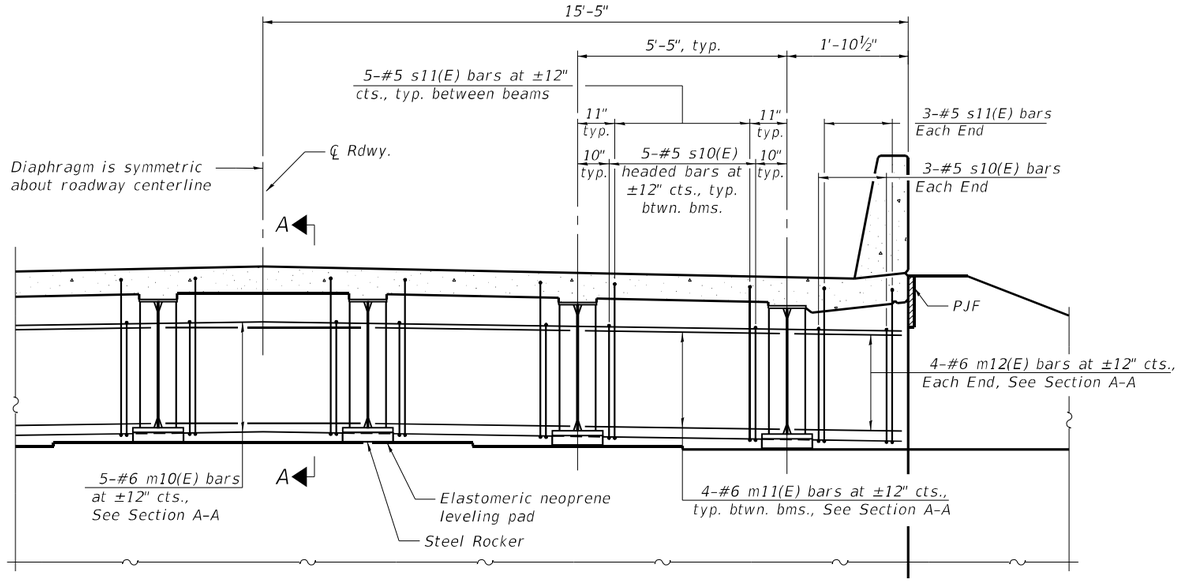

DIAPHRAGM AT ABUTMENT

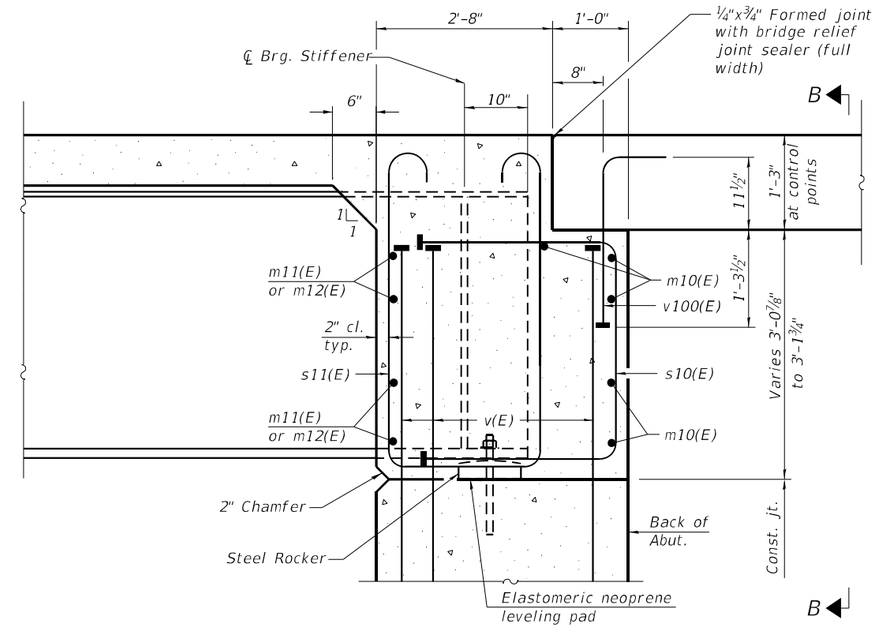

SECTION A-A

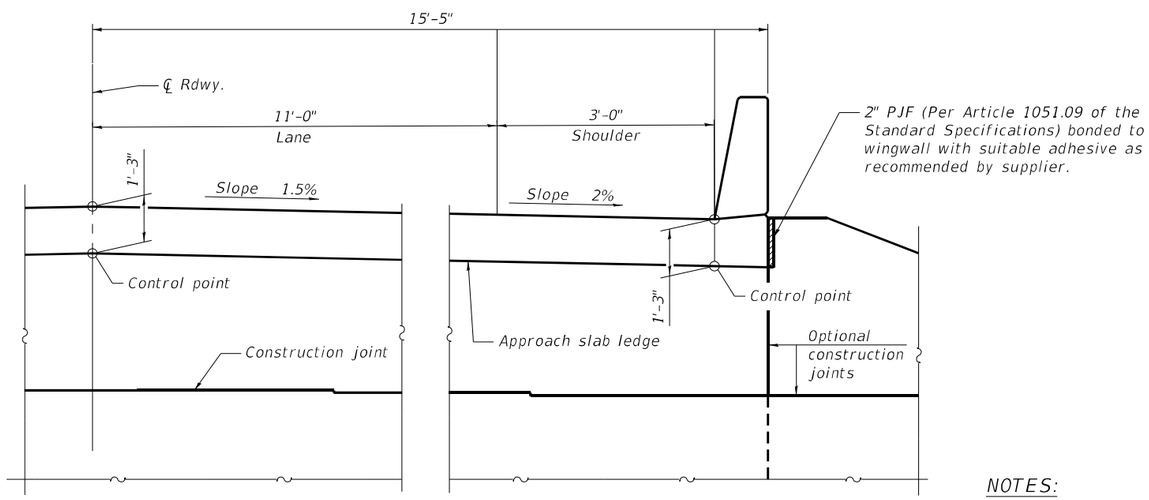

VIEW B-B

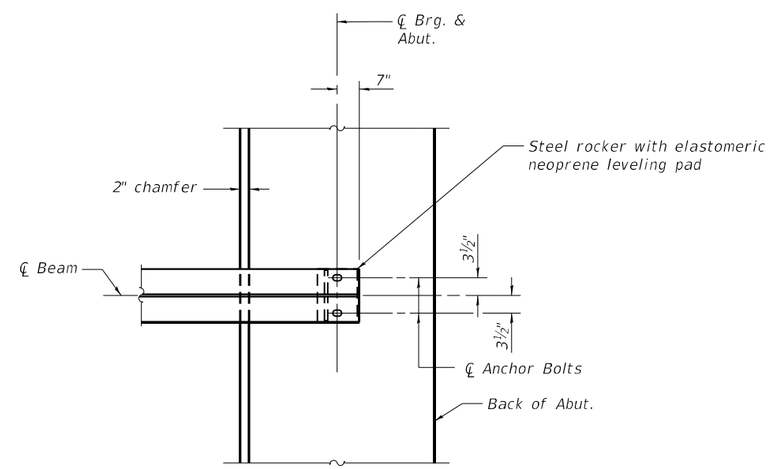

PLAN AT ABUTMENT
(Showing bottom flange of beam)

NOTES:

1. See sheet S-9 of 22 for superstructure details and Bill of material.
2. See sheet S-11 of 22 for PJF details.
3. The approach slab ledge shall have a constant slope determined from the control points shown.
4. Beams shall be braced for stability during erection and remain braced until deck is poured and cured.
5. For bearing details, shee sheet S-15 of 22.

MODEL:
FILE NAME: T:\TRGBusiness\Clients\IDOT\Projects\20-040 PTB 195-041 I-57 Bridge\400 CADD\CAD Sheets\20-040-Diaphragm Detail.dgn

Ardmore Roderick

USER NAME = nickbrustin	DESIGNED - NMB	REVISED -	
	CHECKED - STB	REVISED -	
PLOT SCALE =	DRAWN - NMB	REVISED -	
PLOT DATE = 5/4/2023	CHECKED - STB	REVISED -	

STATE OF ILLINOIS
DEPARTMENT OF TRANSPORTATION

DIAPHRAGM DETAILS
STRUCTURE NO. 010-0295

SHEET S10 OF S22 SHEETS

F.A.I. RTE.	SECTION	COUNTY	TOTAL SHEETS	SHEET NO.
57	(10-31HB)BR	CHAMPAIGN	65	39
		CONTRACT NO. 70908		
FED. ROAD DIST. NO. 5	ILLINOIS	FED. AID PROJECT		

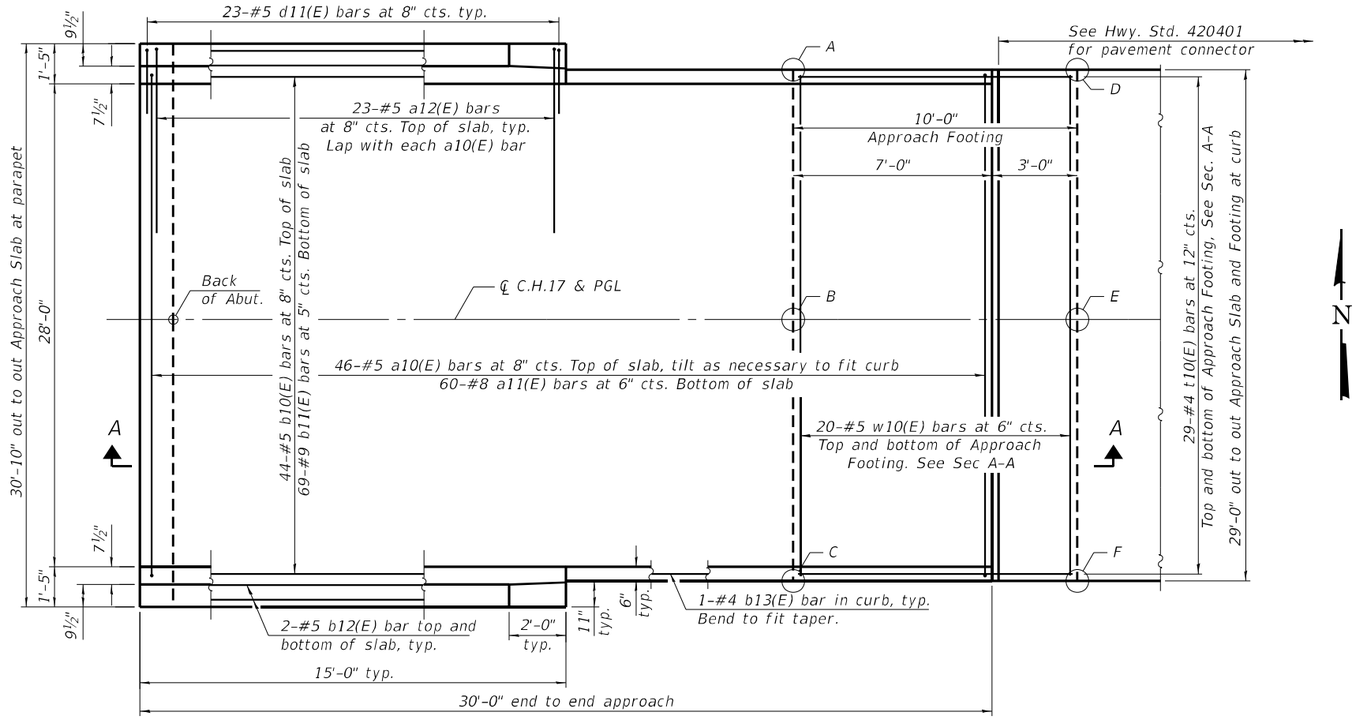

PLAN

(East Approach shown, West Approach symmetrical about ℄ of structure)

TOP AND BOTTOM ELEVATIONS FOR APPROACH FOOTING

West Approach			East Approach		
Point	Top	Bottom	Point	Top	Bottom
A	709.32	708.49	A	709.54	708.70
B	709.56	708.73	B	709.77	708.94
C	709.32	708.49	C	709.54	708.70
D	709.20	708.37	D	709.43	708.59
E	709.43	708.60	E	709.66	708.83
F	709.20	708.37	F	709.43	708.59

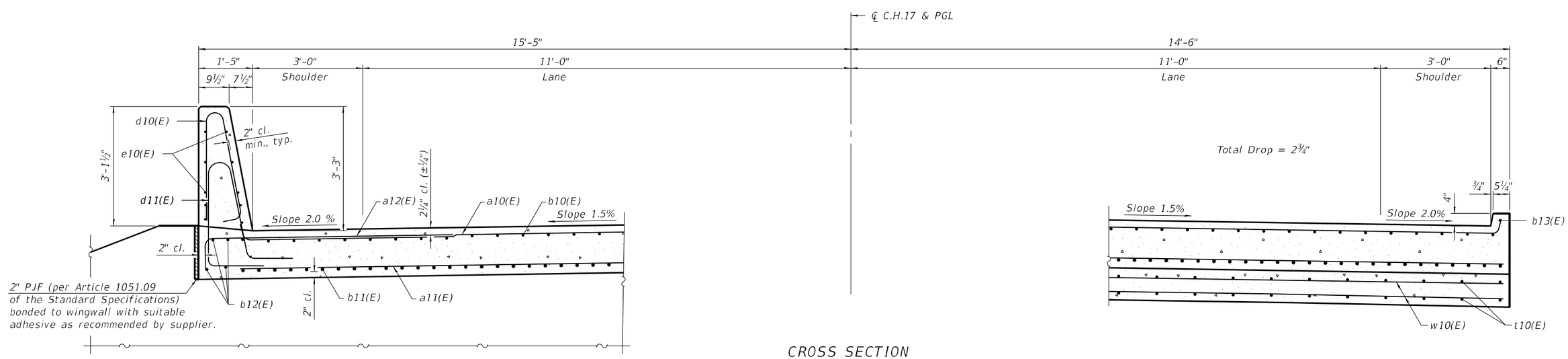

NEAR ABUTMENT

CROSS SECTION

AT APPROACH FOOTING

(Sheet 1 of 2)

MODEL:
FILE NAME: P:\R0950010_Rodeck_-PTB 195 041 B7 CH 17 Ph1 Supp\Phase 2\CAD\0100295-70908-011-Approach\SlabDetails1.dgn

ClarkDietz
DESIGN FIRM REGISTRATION
No. 184-000450

USER NAME = SMM	DESIGNED - SMM	REVISED -	
	CHECKED - KRL	REVISED -	
PLOT SCALE =	DRAWN - SMM	REVISED -	
PLOT DATE = 5/04/2023	CHECKED - KRL	REVISED -	

STATE OF ILLINOIS
DEPARTMENT OF TRANSPORTATION

BRIDGE APPROACH SLAB DETAILS
STRUCTURE NO. 010-0295

SHEET S11 OF S22 SHEETS

F.A.I. RTE.	SECTION	COUNTY	TOTAL SHEETS	SHEET NO.
57	(10-31HB)BR	CHAMPAIGN	65	40
		CONTRACT NO. 70908		
FED. ROAD DIST. NO. 5	ILLINOIS	FED. AID PROJECT		

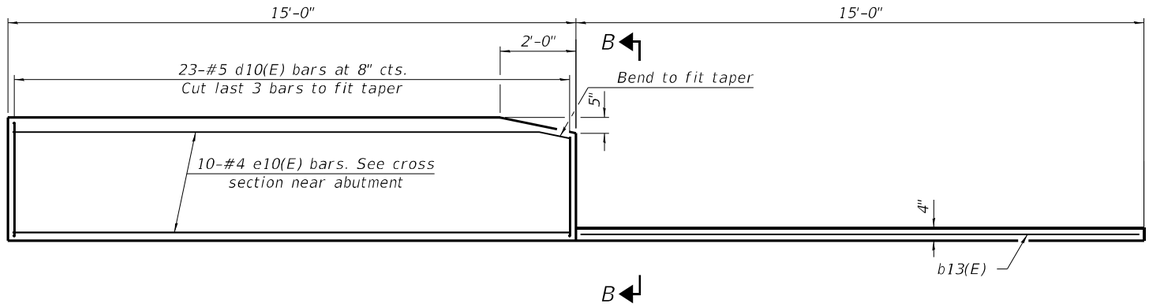

INSIDE ELEVATION OF PARAPET AND CURB

Notes:

The joint opening shall be adjusted for temperature per Article 520.04 of the Standard Specifications. However, since this detail is for jointless structures, the length of bridge used to calculate the adjustment shall be equal to half the total bridge length plus the length of the bridge approach slab.

Parapet concrete shall be paid for as Concrete Superstructure.

Approach slab shall be paid for as Concrete Superstructure (Approach Slab).

Approach footing concrete shall be paid for as Concrete Structures.

The approach footing maximum applied service bearing pressure (Qmax) = 2.0 ksf.

Cost of excavation for approach footing included with Concrete Structures.

For Granular Backfill for Structures and drainage treatment details, see sheet S2 of S22.

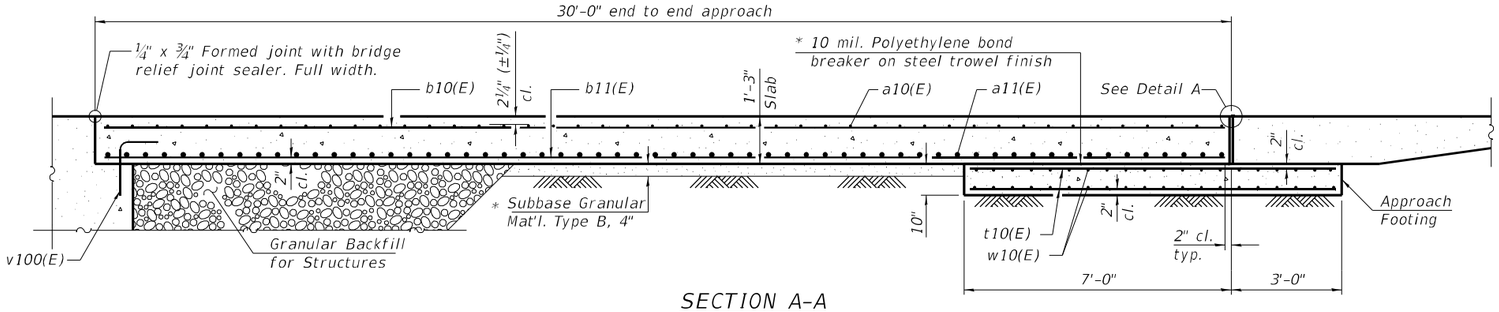

SECTION A-A

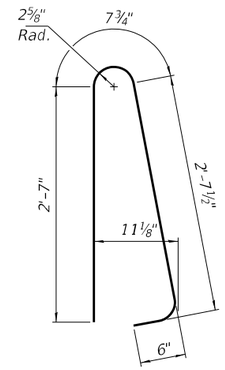

BAR d10(E)

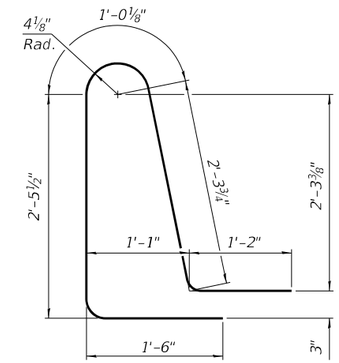

BAR d11(E)

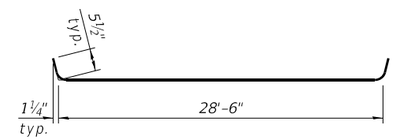

BAR a10(E)

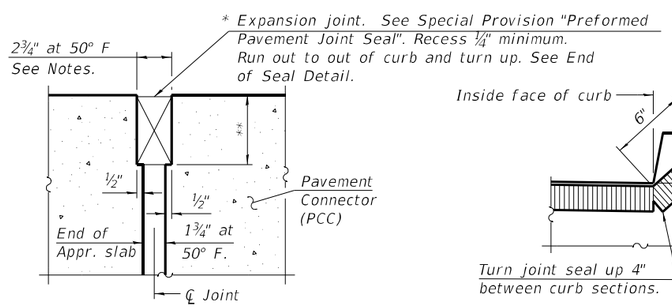

DETAIL A

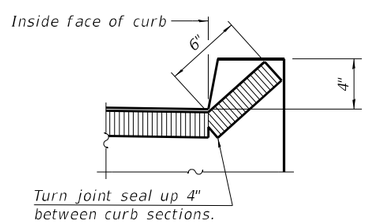

END OF SEAL

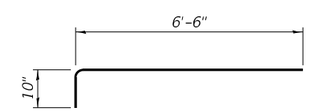

BAR a12(E)

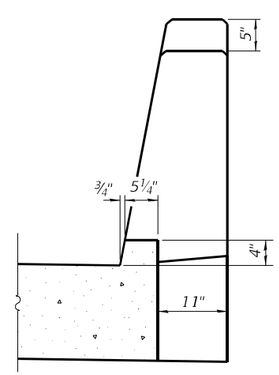

VIEW B-B

* Cost included with Concrete Superstructure (Approach Slab).

** Per manufacturer recommendations

TWO APPROACHES
BILL OF MATERIAL

Bar	No.	Size	Length	Shape
a10(E)	92	#5	29'-5"	
a11(E)	120	#8	28'-8"	
a12(E)	92	#5	7'-4"	
b10(E)	88	#5	29'-8"	
b11(E)	140	#9	29'-8"	
b12(E)	16	#5	14'-8"	
b13(E)	4	#4	14'-8"	
d10(E)	92	#5	6'-5"	
d11(E)	92	#5	8'-6"	
e10(E)	40	#4	14'-8"	
t10(E)	116	#4	9'-8"	
w10(E)	80	#5	28'-8"	
Concrete Superstructure			Cu. Yd.	7.9
Concrete Superstructure (Approach Slab)			Cu. Yd.	83.7
Concrete Structures			Cu. Yd.	17.9
Reinforcement Bars, Epoxy Coated			Pound	34,810

(Sheet 2 of 2)

MODEL:
FILE NAME: P:\R0950010_Roderick - PTB 195 041 B57 CH.17 Ph1 Supp\Phase 2\CAD\0100295-70908-012-ApproachSlabDetails-II.dgn

Clark Dietz
DESIGN FIRM REGISTRATION No. 184-000450

USER NAME = SMM	DESIGNED - SMM	REVISED -	
	CHECKED - KRL	REVISED -	
PLOT SCALE =	DRAWN - SMM	REVISED -	
PLOT DATE = 5/04/2023	CHECKED - KRL	REVISED -	

STATE OF ILLINOIS
DEPARTMENT OF TRANSPORTATION

BRIDGE APPROACH SLAB DETAILS
STRUCTURE NO. 010-0295

SHEET S12 OF S22 SHEETS

F.A.I. RTE.	SECTION	COUNTY	TOTAL SHEETS	SHEET NO.
57	(10-31HB)BR	CHAMPAIGN	65	41
		CONTRACT NO. 70908		
FED. ROAD DIST. NO. 5	ILLINOIS	FED. AID PROJECT		

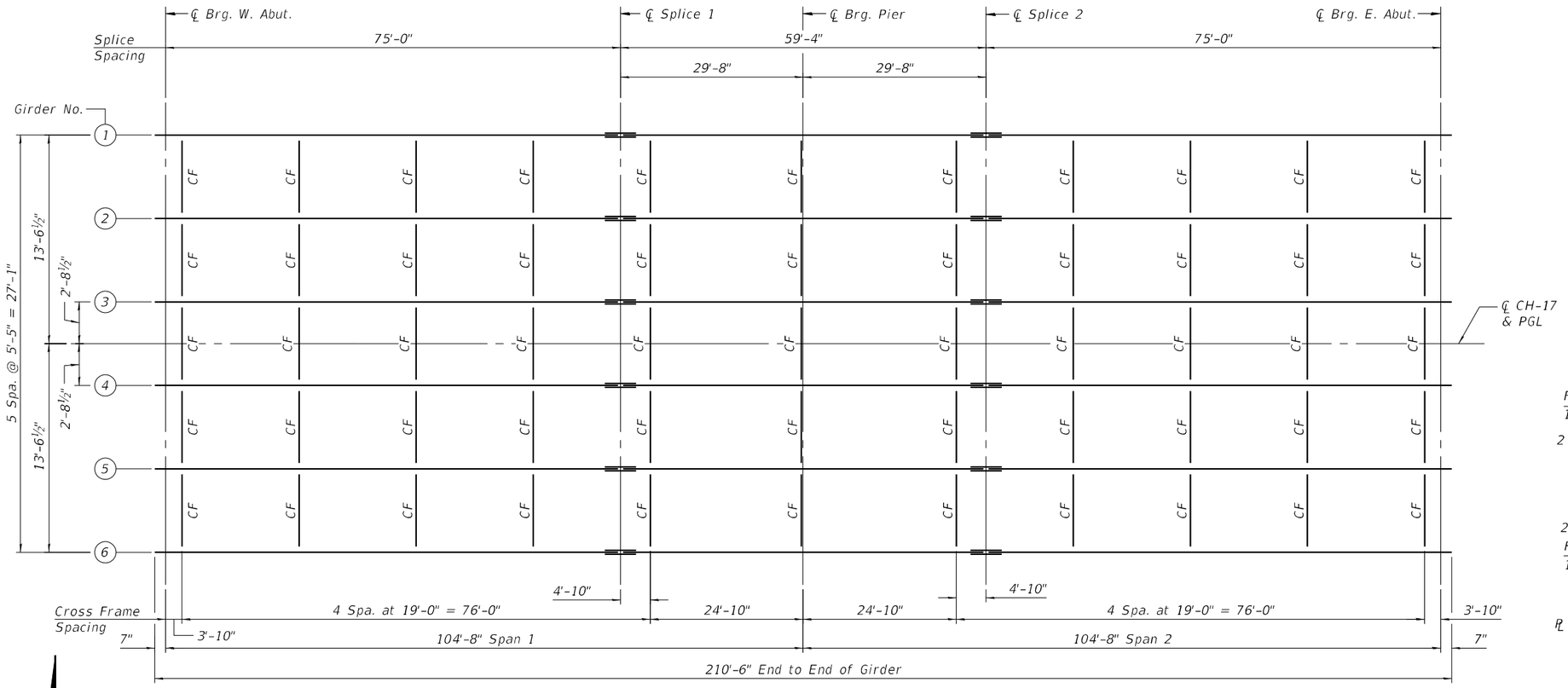

FRAMING PLAN

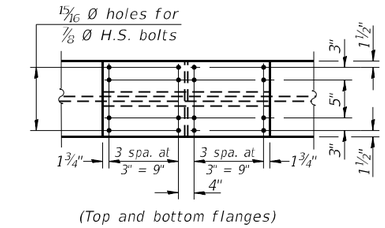

(Top and bottom flanges)

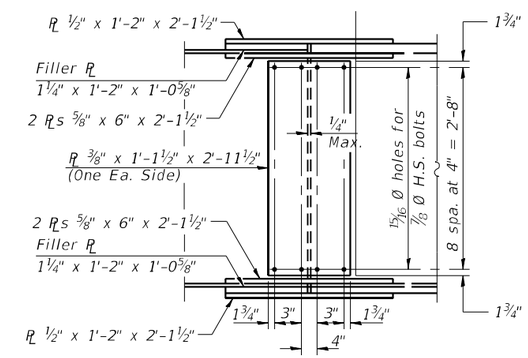

FIELD SPLICE DETAIL

(12 required)

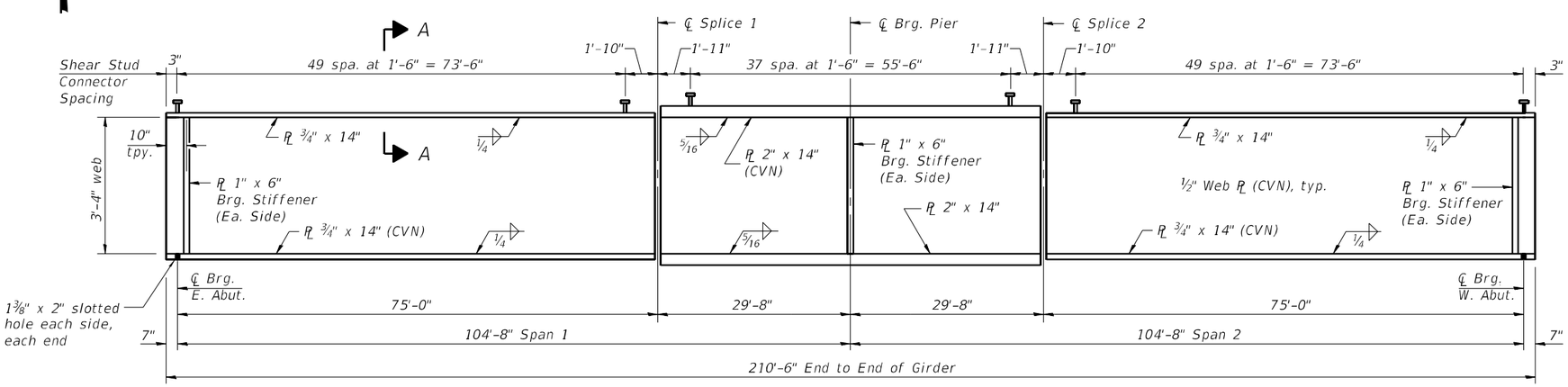

GIRDER ELEVATION

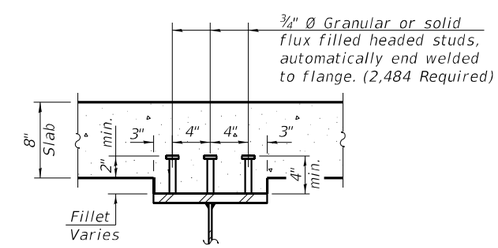

SECTION A-A

Notes:

All flange and web splice plates, except filler plates, shall be AASHTO M270 Grade 50 (CVN).

Load carrying components designated "CVN" shall conform to the Charpy-V-Notch Impact Energy Requirement, Zone 2.

All cross frames shall be installed as steel is erected and secured with erection pins and bolts except as otherwise noted. Individual cross frames at supports may be temporarily disconnected to install bearing anchor rods.

MODEL:
FILE NAME: P:\R0950010_Roderick - PTB 195 041 B57 CH17 Ph1 Supp\Phase 2\CAD\0100295-70908-013-FramingPlan.dgn

Clark Dietz DESIGN FIRM REGISTRATION No. 184-000450	USER NAME = SMM	DESIGNED - SMM	REVISED -	STATE OF ILLINOIS DEPARTMENT OF TRANSPORTATION	STRUCTURAL STEEL STRUCTURE NO. 010-0295	F.A.I. RTE.	SECTION	COUNTY	TOTAL SHEETS	SHEET NO.
		CHECKED - MIA	REVISED -			57	(10-31HB)BR	CHAMPAIGN	65	42
	PLOT SCALE =	DRAWN - SMM	REVISED -					CONTRACT NO. 70908		
	PLOT DATE = 5/04/2023	CHECKED - KRL	REVISED -		SHEET S13 OF S22 SHEETS	FED. ROAD DIST. NO. 5	ILLINOIS	FED. AID PROJECT		

** Fillet weld angles along 3 sides on one face of gusset plate; however, if cross-frames are galvanized, weld all-around.

*** If cross-frames are galvanized, weld all-around.

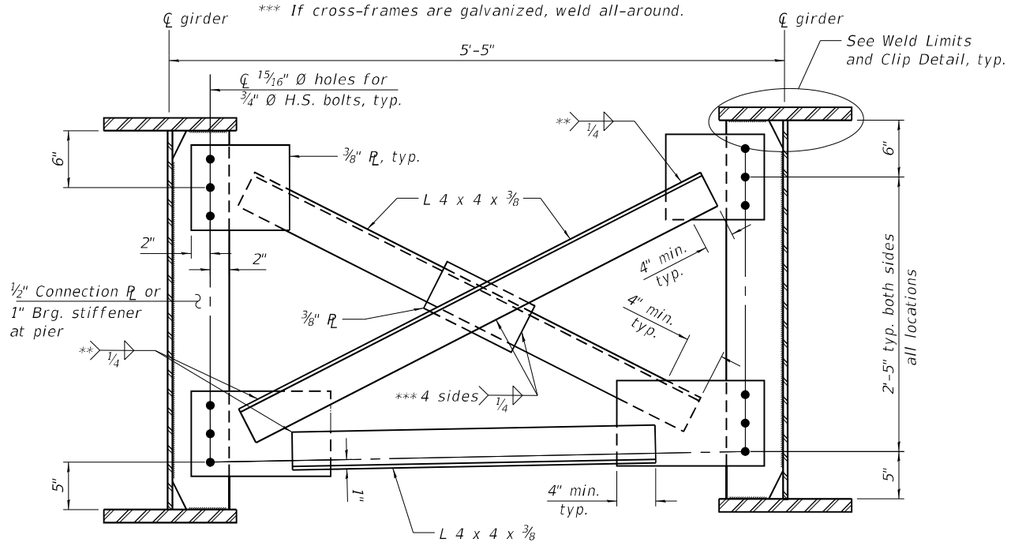

Notes:

Two hardened washers required for each set of oversized holes.

All cross frames shall be installed as steel is erected and secured with erection pins and bolts except as otherwise noted. Individual cross frames at supports may be temporarily disconnected to install bearing anchor rods.

Omit connection plates on the exterior side of the exterior girders.

INTERIOR CROSS FRAMES CF

(55 required)

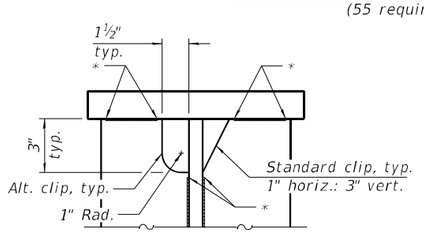

WELD LIMITS AND CLIP DETAIL

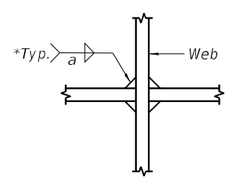

a = 5/16" (stiffener PL); 1/4" (conn. PL)

WEB WELD DETAIL

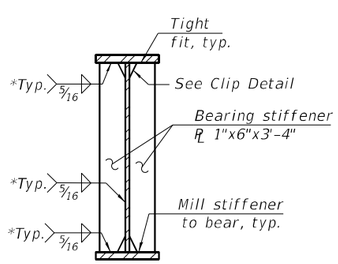

BEARING STIFFENER DETAIL

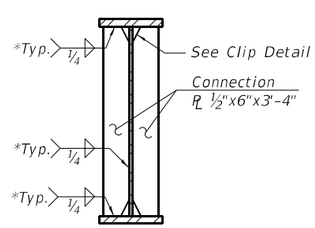

CONNECTION PLATE DETAIL

* Terminate 1/4" (±1/8") from the end of plate intersects.

INTERIOR GIRDER MOMENT TABLE			
		0.4 Sp. 1 or 0.6 Sp. 2	Pier
Is	(in⁴)	11,385	27,381
Ic(n)	(in⁴)	28,679	–
Ic(3n)	(in⁴)	21,260	–
Ic(cr)	(in⁴)	–	30,960
Ss	(in³)	548.7	1,245
Sc(n)	(in³)	777.3	–
Sc(3n)	(in³)	707.6	–
Sc(cr)	(in³)	–	1,301
DC1	(k/')	0.721	0.849
MDC1	('k)	460	1,339
DC2	(k/')	0.175	0.175
MDC2	('k)	115	288
DW	(k/')	0.234	0.234
MDW	('k)	154	385
LLDF		0.438	0.464
M_{LL+IM}	('k)	999	1,371
Mu (Strength I)	('k)	2,698	5,011
Øf Mn	('k)	3,851	5,815
fs DC1	(ksi)	10.06	12.91
fs DC2	(ksi)	1.95	2.66
fs DW	(ksi)	2.61	3.55
fs (LL+IM)	(ksi)	15.42	12.65
fs (Service II)	(ksi)	34.67	35.55
0.95Rh Fyf	(ksi)	47.50	47.50
fs (Total)(Strength I)	(ksi)	–	–
Øf Fn	(ksi)	–	–
Vf	(k)	19.6	28.1

GIRDER REACTION TABLE					
		Abut.		Pier	
		Interior	Exterior	Interior	Exterior
LLDF		0.627	0.492	0.627	0.492
OCF		–	–	–	–
RDC1	(k)	27.0	25.6	106.9	101.7
RDC2	(k)	6.4	6.4	23.8	23.8
RDW	(k)	8.6	8.6	32.0	32.0
RLL	(k)	57.8	45.3	117.6	92.0
RIm	(k)	13.2	10.3	22.6	17.7
Rtotal	(k)	113.0	96.2	302.9	267.2

TOP OF WEB ELEVATIONS

(For Fabrication Only)

Location	℄ Brg. W. Abut.	℄ Splice 1	℄ Brg. Pier	℄ Splice 2	℄ Brg. E. Abut.
Girder 1	710.07	710.49	710.52	710.54	710.24
Girder 2	710.16	710.59	710.61	710.64	710.33
Girder 3	710.24	710.67	710.69	710.72	710.41
Girder 4	710.24	710.67	710.69	710.72	710.41
Girder 5	710.16	710.59	710.61	710.64	710.33
Girder 6	710.07	710.49	710.52	710.54	710.24

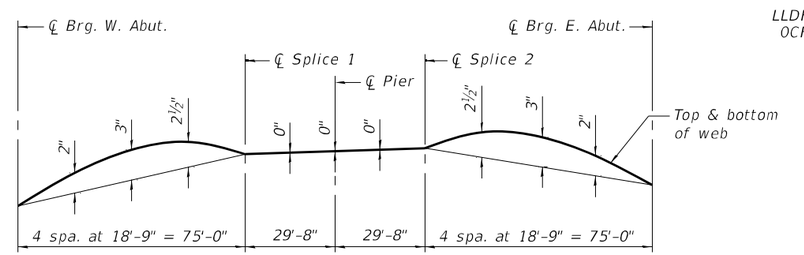

CAMBER DIAGRAM

Is, Ss: Non-composite moment of inertia and section modulus of the steel section used for computing fs(Total-Strength I, and Service II) due to non-composite dead loads (in.⁴ and in.³).

Ic(n), Sc(n): Composite moment of inertia and section modulus of the steel and deck based upon the modular ratio, "n", used for computing fs(Total-Strength I, and Service II) in uncracked sections due to short-term composite live loads (in.⁴ and in.³).

Ic(3n), Sc(3n): Composite moment of inertia and section modulus of the steel and deck based upon 3 times the modular ratio, "3n", used for computing fs(Total-Strength I, and Service II) in uncracked sections, due to long-term composite (superimposed) dead loads (in.⁴ and in.³).

Ic(cr), Sc(cr): Composite moment of inertia and section modulus of the steel and longitudinal deck reinforcement, used for computing fs (Total-Strength I and Service II) in cracked sections, due to both short-term composite live loads and long-term composite (superimposed) dead loads (in.⁴ and in.³).

DC1: Un-factored non-composite dead load (kips/ft.).

MDC1: Un-factored moment due to non-composite dead load (kip-ft.).

DC2: Un-factored long-term composite (superimposed excluding future wearing surface) dead load (kips/ft.).

MDC2: Un-factored moment due to long-term composite (superimposed excluding future wearing surface) dead load (kip-ft.).

DW: Un-factored long-term composite (superimposed future wearing surface only) dead load (kips/ft.).

MDW: Un-factored moment due to long-term composite (superimposed future wearing surface only) dead load (kip-ft.).

M_{LL+IM}: Un-factored live load moment plus dynamic load allowance (impact) (kip-ft.).

Mu (Strength I): Factored design moment (kip-ft.).
1.25 (MDC1 + MDC2) + 1.5 MDW + 1.75 M_{LL+IM}

Øf Mn: Compact composite positive moment capacity computed according to Article 6.10.7.1 or non-slender negative moment capacity according to Article A6.1.1 or A6.1.2 (kip-ft).

fs DC1: Un-factored stress at edge of flange for controlling steel flange due to vertical non-composite dead loads as calculated below (ksi).
MDC1/ Snc

fs DC2: Un-factored stress at edge of flange for controlling steel flange due to vertical composite dead loads as calculated below (ksi).
MDC2/ Sc(3n) or MDC2/ Sc(cr) as applicable.

fs DW: Un-factored stress at edge of flange for controlling steel flange due to vertical composite future wearing surface loads as calculated below (ksi).
MDW/ Sc(3n) or MDW/ Sc(cr) as applicable.

fs (LL+IM): Un-factored stress at edge of flange for controlling steel flange due to vertical composite live load plus impact loads as calculated below (ksi).
M_{LL+IM} / Sc(n) or M_{LL+IM} / Sc(cr) as applicable.

fs (Service II): Sum of stresses as computed below (ksi).
fsDC1 + fsDC2 + fsDW + 1.3 fs(LL+IM)

0.95RhFyf: Composite stress capacity for Service II loading according to Article 6.10.4.2 (ksi).

fs (Total)(Strength I): Sum of stresses as computed below on non-compact section (ksi).
1.25 (fsDC1 + fsDC2) + 1.5 fsDW + 1.75 fs(LL+IM)

Øf Fn: Non-Compact composite positive or negative stress capacity for Strength I loading according to Article 6.10.7 or 6.10.8 (ksi).

Vf: Maximum factored shear range in span computed according to Article 6.10.10.

LLDF: Live Load Distribution Factor

OCF: Obtuse Correction Factor

MODEL:
FILE NAME: P:\0950010 Roderick - PTB 195 041 B57 CH17 Ph1 Supp\Phase 2\CAD\0100295-70908-014-StructuralSteelDetails.cgn

Clark Dietz
DESIGN FIRM REGISTRATION No. 184-000450

USER NAME = SMM	DESIGNED - SMM	REVISED -	
	CHECKED - MIA	REVISED -	
PLOT SCALE =	DRAWN - SMM	REVISED -	
PLOT DATE = 5/04/2023	CHECKED - KRL	REVISED -	

STATE OF ILLINOIS
DEPARTMENT OF TRANSPORTATION

STRUCTURAL STEEL DETAILS
STRUCTURE NO. 010-0295

SHEET S14 OF S22 SHEETS

F.A.I. RTE.	SECTION	COUNTY	TOTAL SHEETS	SHEET NO.
57	(10-31HB)BR	CHAMPAIGN	65	43
		CONTRACT NO. 70908		
FED. ROAD DIST. NO. 5	ILLINOIS	FED. AID PROJECT		

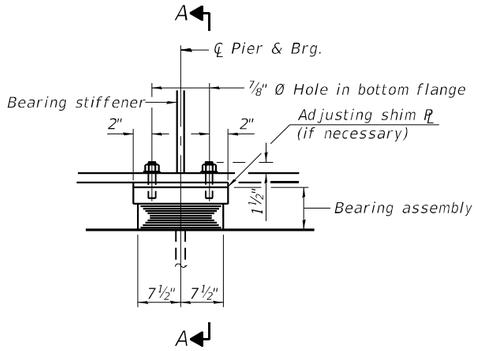

ELEVATION AT PIER

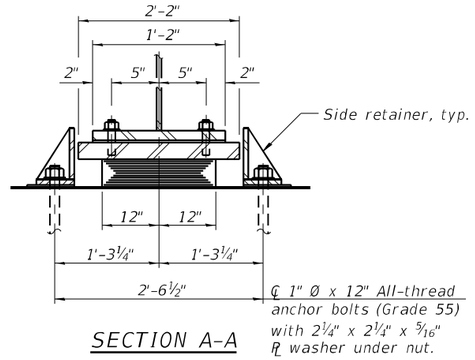

SECTION A-A

TYPE I ELASTOMERIC EXP. BRG.

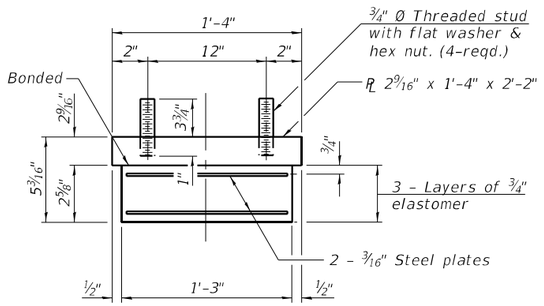

BEARING ASSEMBLY

Note:
Shim plates shall not be placed under bearing assembly.

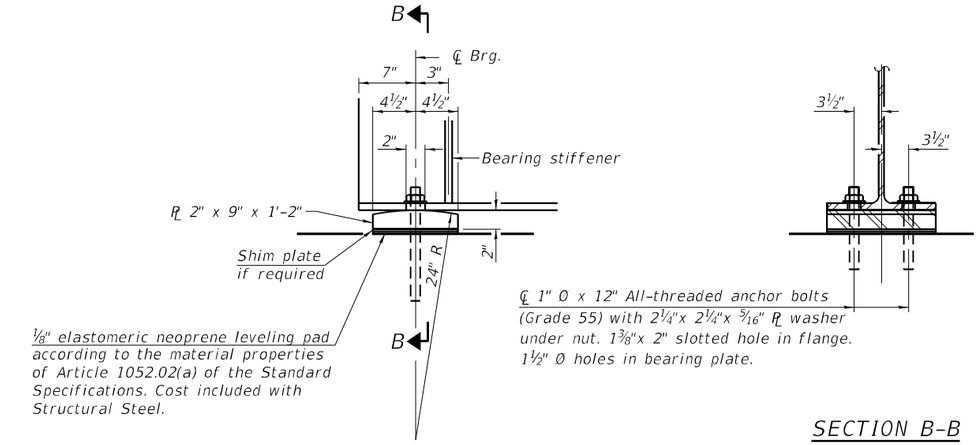

SECTION B-B

ELEVATION AT ABUTMENT

FIXED BEARING
(12 required)

Notes:
Side retainers and stainless steel plates shall be included in the cost of Elastomeric Bearing Assembly, Type I.
Anchor bolts and side retainers at all supports shall be installed as each member is erected unless an equivalent temporary means of lateral restraint is used.
Beams shall be braced for stability during erection and remain braced until deck is poured and cured.
The structural steel plates of the fixed bearings and of the Bearing Assembly, except adjusting shims, shall conform to the requirements of AASHTO M 270 Grade 50.
Two 1/8" adjusting shims shall be provided for each bearing in addition to all other plates or shims and placed as shown on bearing details.
All embedded and seperate bearing plates, side retainers, anchor bolts, nuts and washers shall be galvanized according to AASHTO M111 or M232 as applicable.
Cost of fixed bearings at abutments included in Furnishing and Erecting Structural Steel.

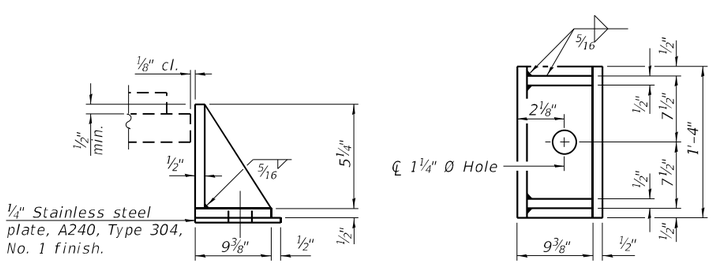

SIDE RETAINER
Equivalent rolled angle with stiffeners will be allowed in lieu of welded plates.

BILL OF MATERIAL

Item	Unit	Total
Elastomeric Bearing Assembly Type I	Each	6
Anchor Bolts, 1"	Each	36

MODEL:
FILE NAME: P:\R0950010_Roderick - PTB 195 041 B57 CH17 Ph1 Supp\Phase 2\CAD\0100295-70908-015-BearingDetails.dgn

Clark Dietz
DESIGN FIRM REGISTRATION No. 184-000450

USER NAME = SMM	DESIGNED - SMM	REVISED -	
	CHECKED - MIA	REVISED -	
PLOT SCALE =	DRAWN - SMM	REVISED -	
PLOT DATE = 5/04/2023	CHECKED - KRL	REVISED -	

STATE OF ILLINOIS
DEPARTMENT OF TRANSPORTATION

BEARING DETAILS
STRUCTURE NO. 010-0295
SHEET S15 OF S22 SHEETS

F.A.I. RTE.	SECTION	COUNTY	TOTAL SHEETS	SHEET NO.
57	(10-31HB)BR	CHAMPAIGN	65	44
		CONTRACT NO. 70908		

FED. ROAD DIST. NO. 5 | ILLINOIS | FED. AID PROJECT

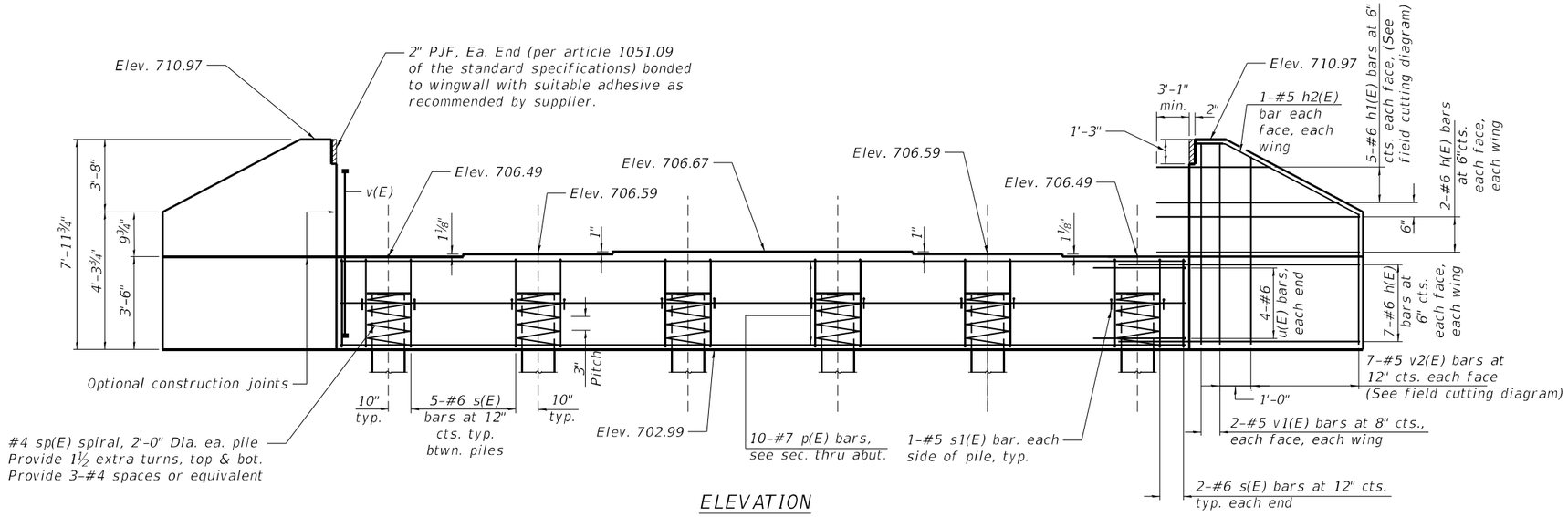

ELEVATION

(West Abut. looking West)

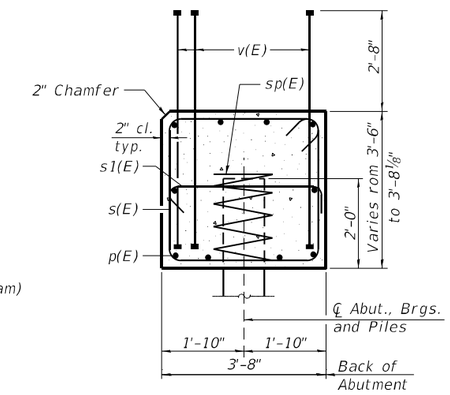

SEC THRU ABUT.

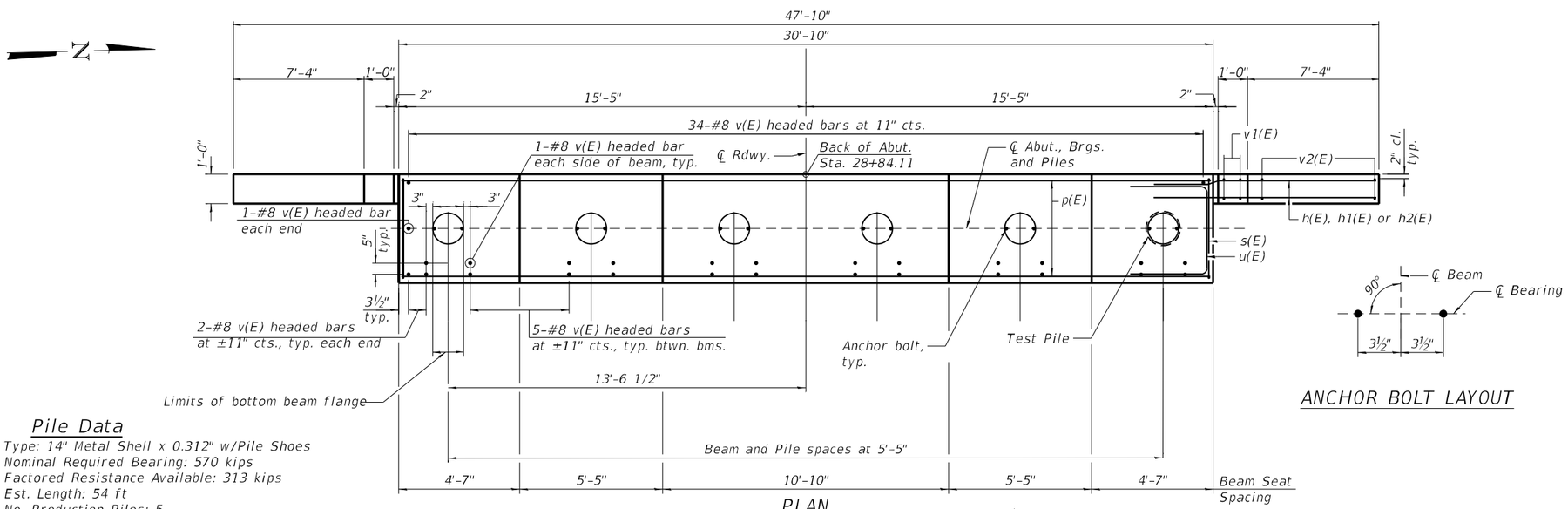

PLAN

ANCHOR BOLT LAYOUT

Pile Data

Type: 14" Metal Shell x 0.312" w/Pile Shoes
Nominal Required Bearing: 570 kips
Factored Resistance Available: 313 kips
Est. Length: 54 ft
No. Production Piles: 5
No. Test Piles: 1

BILL OF MATERIAL

	Bar	No.	Size	Length	Shape
	h(E)	32	#6	11'-5"	
	h1(E)	10	#6	19'-0"	
	h2(E)	4	#5	8'-10"	
	p(E)	10	#7	30'-6"	
**	sp(E)	6	#4	2'-2"	
	s(E)	29	#6	14'-4"	
	s1(E)	12	#5	4'-4"	
	u(E)	8	#6	11-10"	
	v(E)	77	#8	6'-0"	
	v1(E)	8	#5	7'-7"	
	v2(E)	14	#5	11'-1"	
	Structure Excavation			Cu. Yd.	62
	Concrete Structures			Cu. Yd.	23.1
	Reinforcement Bars, Epoxy Coated			Pound	4,000
	Furnishing Metal Shell Piles 14"x0.312"			Foot	270
	Driving Piles			Foot	270
	Test Pile, Metal Shells			Each	1
	Pile Shoes			Each	6

Bars indicated thus 1 x 4-#5 etc. indicates 1 line of bars with 4 lengths per line.

** Length is height of spiral

NOTES:

1. Pour steps monolithically with cap.
2. Headed bars shall conform to ASTM A970 with threaded attachment: Class HA; and reinforcement bars conforming to ASTM A706. Cost included with Reinforcement Bars, Epoxy Coated.
3. For details of piles see sheet S19 of S22.

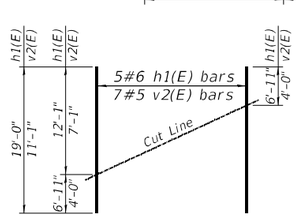

FIELD CUTTING DIAGRAM

Order h1(E) and v2(E) full length. Cut as shown and use remainder of bars in opposite wing.

Bar v(E)

(Headed)

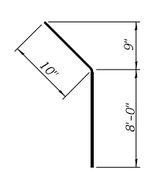

Bar h2(E)

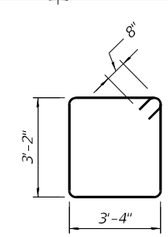

Bar s(E)

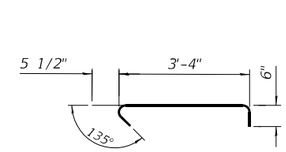

Bar s1(E)

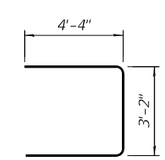

Bar u(E)

USER NAME = nickbrustin	DESIGNED - NMB	REVISED -	STATE OF ILLINOIS DEPARTMENT OF TRANSPORTATION
	CHECKED - STB	REVISED -	
PLOT SCALE =	DRAWN - NMB	REVISED -	
PLOT DATE = 5/4/2023	CHECKED - STB	REVISED -	

WEST ABUTMENT DETAILS
STRUCTURE NO. 010-0295
SHEET S16 OF S22 SHEETS

F.A.I. RTE.	SECTION	COUNTY	TOTAL SHEETS	SHEET NO.
57	(10-31HB)BR	CHAMPAIGN	65	45
		CONTRACT NO. 70908		
FED. ROAD DIST. NO. 5	ILLINOIS	FED. AID PROJECT		

Ardmore Roderick

MODEL:
FILE NAME: T:\TRG\Business\Clients\IDOT\Projects\20-040 PTB 195-041 I-57 Bridges\400 CADD\CAD_Sheets\20-040-West Abutment.dgn

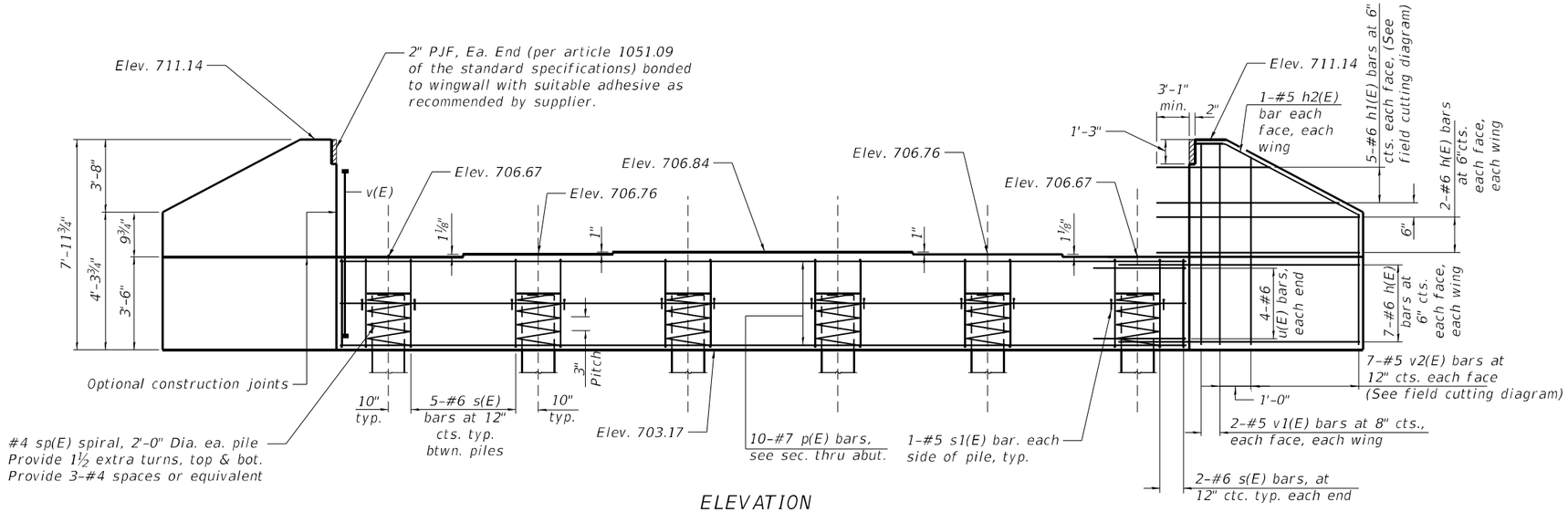

ELEVATION

(East Abut. looking East)

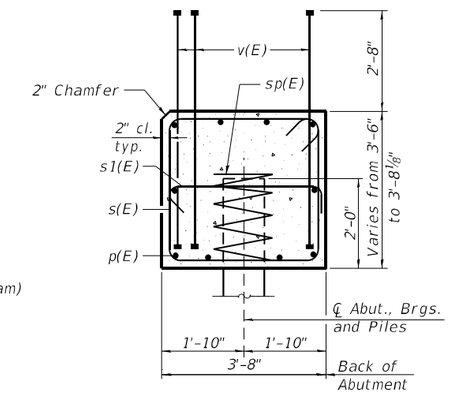

SEC THRU ABUT.

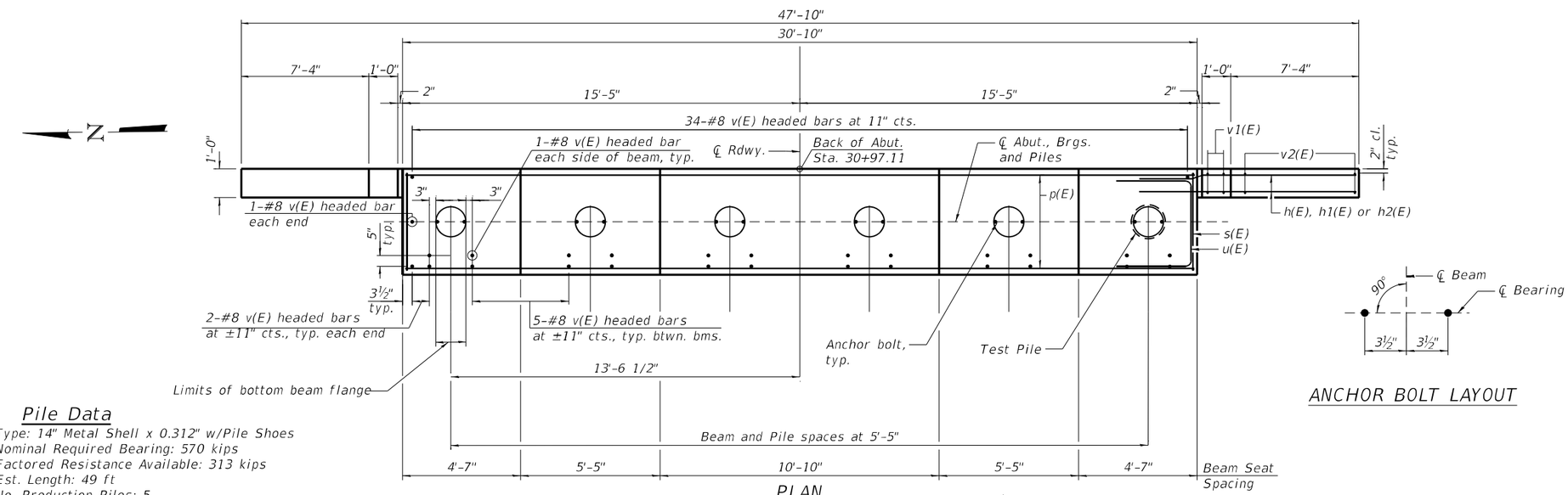

PLAN

ANCHOR BOLT LAYOUT

BILL OF MATERIAL

	Bar	No.	Size	Length	Shape
	h(E)	32	#6	11'-5"	
	h1(E)	10	#6	19'-0"	
	h2(E)	4	#5	8'-10"	
	p(E)	10	#7	30'-6"	
**	sp(E)	6	#4	2'-2"	
	s(E)	29	#6	14'-4"	
	s1(E)	12	#5	4'-4"	
	u(E)	8	#6	11-10"	
	v(E)	77	#8	6'-0"	
	v1(E)	8	#5	7'-7"	
	v2(E)	14	#5	11'-1"	
	Structure Excavation			Cu. Yd.	62
	Concrete Structures			Cu. Yd.	23.1
	Reinforcement Bars, Epoxy Coated			Pound	4,000
	Furnishing Metal Shell Piles 14"x0.312"			Foot	245
	Driving Piles			Foot	245
	Test Pile, Metal Shells			Each	1
	Pile Shoes			Each	6

Bars indicated thus 1 x 4-#5 etc. indicates 1 line of bars with 4 lengths per line.

**Length is height of spiral

Pile Data

Type: 14" Metal Shell x 0.312" w/Pile Shoes
Nominal Required Bearing: 570 kips
Factored Resistance Available: 313 kips
Est. Length: 49 ft
No. Production Piles: 5
No. Test Piles: 1

Note:
Piles at east abutment shall be driven through precored holes, see general notes.

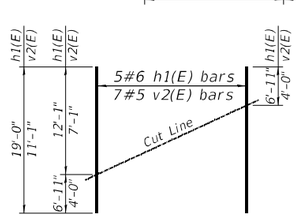

FIELD CUTTING DIAGRAM

Order h1(E) and v2(E) full length. Cut as shown and use remainder of bars in opposite wing.

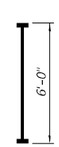

Bar v(E)

(Headed)

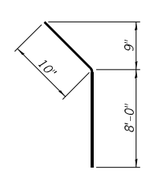

Bar h2(E)

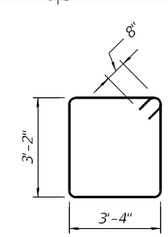

Bar s(E)

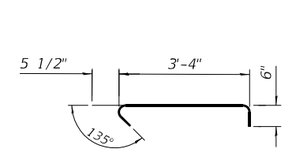

Bar s1(E)

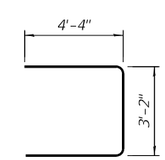

Bar u(E)

NOTES:

1. Pour steps monolithically with cap.
2. Headed bars shall conform to ASTM A970 with threaded attachment: Class HA; and reinforcement bars conforming to ASTM A706. Cost included with Reinforcement Bars, Epoxy Coated.
3. For details of piles see sheet S19 of S22.
4. Piles shall be driven through 24" diameter precored holes extending to elevation 693.77 according to Article 512.09(c) of the Standard Specifications except that the void space outside the pille shall be filled with bentonite according to the manufacturer's recommendations to achieve a Qu of 1.5 tsf. Cost included in driving piles.

MODEL:
FILE NAME: T:\TRG\Business\Clients\IDOT\Projects\20-040 PTB 195-041 I-57 Bridge\400 CADD\CAD_Sheets\20-040-East Abutment.dgn

Ardmore Roderick

USER NAME = nickbrustin	DESIGNED - NMB	REVISED -	
	CHECKED - STB	REVISED -	
PLOT SCALE =	DRAWN - NMB	REVISED -	
PLOT DATE = 5/4/2023	CHECKED - STB	REVISED -	

STATE OF ILLINOIS
DEPARTMENT OF TRANSPORTATION

EAST ABUTMENT DETAILS
STRUCTURE NO. 010-0295

SHEET S17 OF S22 SHEETS

F.A.I. RTE.	SECTION	COUNTY	TOTAL SHEETS	SHEET NO.
57	(10-31HB)BR	CHAMPAIGN	65	46
		CONTRACT NO. 70908		
FED. ROAD DIST. NO. 5	ILLINOIS	FED. AID PROJECT		

Notes:
Space reinforcement in cap to miss anchor bolts.
Pour steps monolithically with cap.

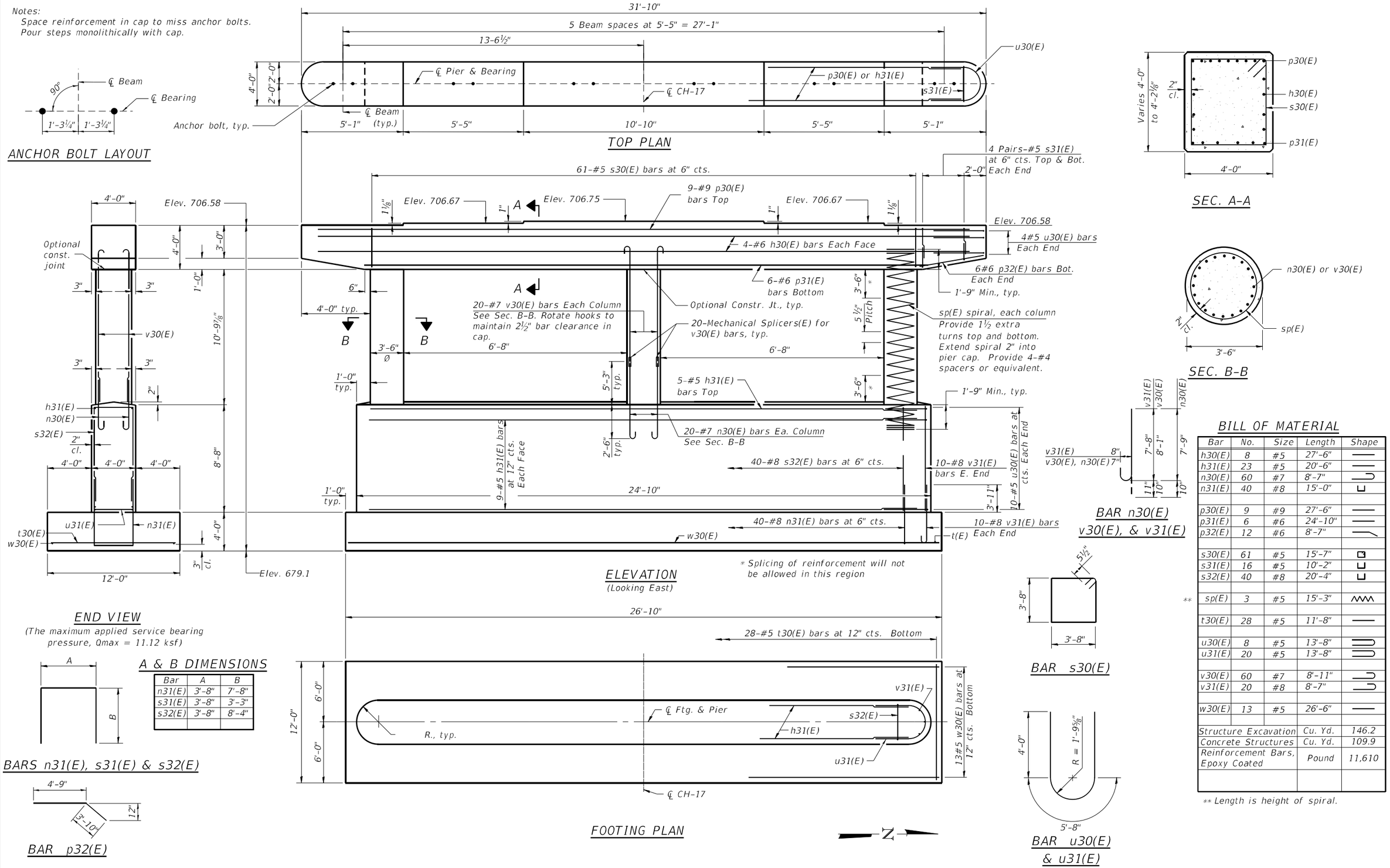

Bar	No.	Size	Length	Shape
h30(E)	8	#5	27'-6"	
h31(E)	23	#5	20'-6"	
n30(E)	60	#7	8'-7"	
n31(E)	40	#8	15'-0"	
p30(E)	9	#9	27'-6"	
p31(E)	6	#6	24'-10"	
p32(E)	12	#6	8'-7"	
s30(E)	61	#5	15'-7"	
s31(E)	16	#5	10'-2"	
s32(E)	40	#8	20'-4"	
** sp(E)	3	#5	15'-3"	
t30(E)	28	#5	11'-8"	
u30(E)	8	#5	13'-8"	
u31(E)	20	#5	13'-8"	
v30(E)	60	#7	8'-11"	
v31(E)	20	#8	8'-7"	
w30(E)	13	#5	26'-6"	
Structure Excavation			Cu. Yd.	146.2
Concrete Structures			Cu. Yd.	109.9
Reinforcement Bars, Epoxy Coated			Pound	11,610

** Length is height of spiral.

A & B DIMENSIONS		
Bar	A	B
n31(E)	3'-8"	7'-8"
s31(E)	3'-8"	3'-3"
s32(E)	3'-8"	8'-4"

MODEL:
FILE NAME: T:\TRGBusiness\Clients\IDOT\Projects\20-040 PTB 195-041 I-57 Bridge\400 CADD\CAD_Sheets\20-040-Pier Details.dgn

Ardmore Roderick

USER NAME = nickbrustin	DESIGNED - AS	REVISED -	
	CHECKED - STB	REVISED -	
PLOT SCALE =	DRAWN - AS	REVISED -	
PLOT DATE = 5/4/2023	CHECKED - STB	REVISED -	

STATE OF ILLINOIS
DEPARTMENT OF TRANSPORTATION

PIER DETAILS
STRUCTURE NO. 010-0295

SHEET S18 OF S22 SHEETS

F.A.I. RTE.	SECTION	COUNTY	TOTAL SHEETS	SHEET NO.
57	(10-31HB)BR	CHAMPAIGN	65	47
		CONTRACT NO. 70908		
FED. ROAD DIST. NO. 5	ILLINOIS	FED. AID PROJECT		

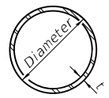

METAL SHELL PILE TABLE

Designation and outside diameter	Wall thickness t	Weight per foot (Lbs./ft.)	Inside volume (yd.³/ft.)
PP12	0.250"	31.40	0.0267
PP14	0.250"	36.75	0.0368
PP14	0.312"	45.65	0.0361
PP16	0.312"	52.32	0.0478
PP16	0.375"	62.64	0.0470

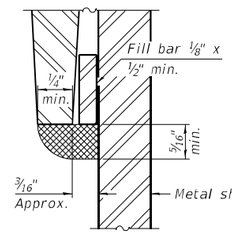

DETAIL A

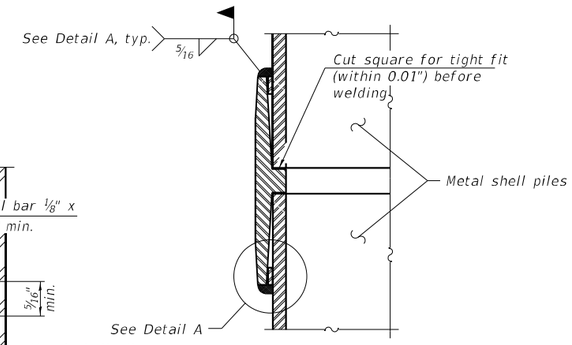

WELDED COMMERCIAL SPLICE

Notes:
The 1/8" x 1/2" min. fill bar may be constructed of 2 bars with a 1/8" max. gap between them.
Pile segments shall be driven to solid contact with splicer before welding.

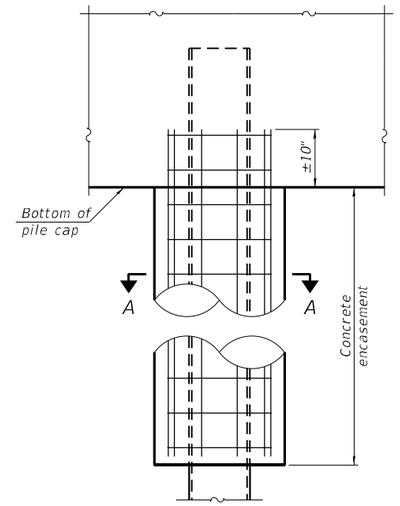

ELEVATION

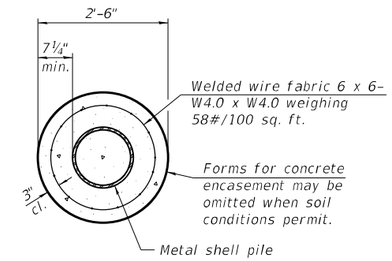

SECTION A-A

INDIVIDUAL PILE CONCRETE ENCASEMENT

(When specified)

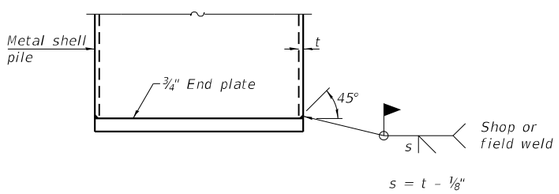

END PLATE ATTACHMENT

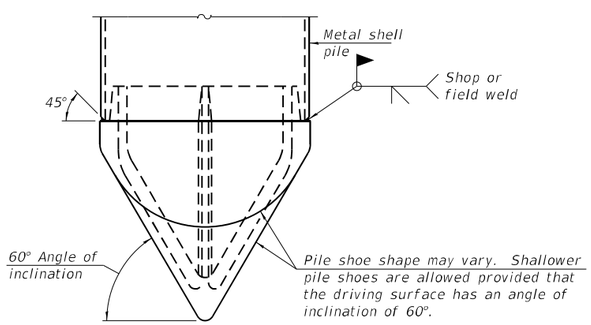

PILE SHOE ATTACHMENT

(When called for on the plans, the Contractor shall furnish metal shell pile shoes consisting of a single piece conical pile point as shown. The pile shoes shall be cast in one piece steel according to either ASTM A 148 Grade 80-50 or AASHTO M 103 Grade 65-35 and shall provide full bearing over the full circumference of the metal shell pile. The pile shoe shall have tapered leads to assure proper alignment and fitting and shall be secured to the pile with a circumferential weld).

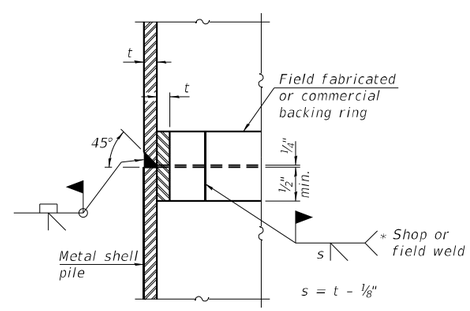

COMPLETE PENETRATION WELD SPLICE

* Field fabricated backing ring may be made from pile shell by removing segment to allow reducing circumference and vertically rejoin with partial joint penetration weld.

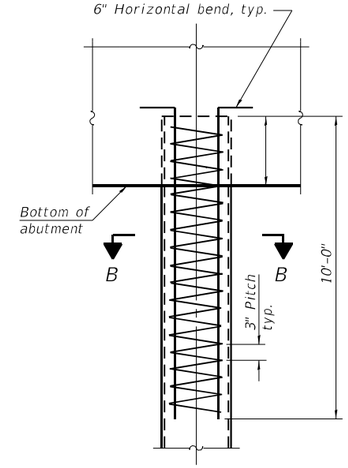

ELEVATION

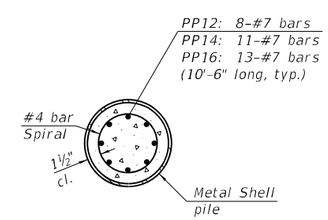

SECTION B-B

REINFORCEMENT AT ABUTMENTS

(Omit when concrete encasement is specified)

Note:
The metal shell piles shall be according to Article 1006.05 of the Standard Specifications.

F-MS 2-1-2023

MODEL:
FILE NAME: T:\TRG\Business\Clients\IDOT\Projects\20-040 PTB 195-041 I-57 Bridge\400 CADD\CAD_Sheets\20-040 Foundation Details.dgn

Ardmore Roderick

USER NAME = nickbrustin	DESIGNED - NMB	REVISED -	
	CHECKED - STB	REVISED -	
PLOT SCALE =	DRAWN - NMB	REVISED -	
PLOT DATE = 5/4/2023	CHECKED - STB	REVISED -	

STATE OF ILLINOIS
DEPARTMENT OF TRANSPORTATION

METAL SHELL PILE DETAILS
STRUCTURE NO. 010-0295
SHEET S19 OF S22 SHEETS

F.A.I. RTE.	SECTION	COUNTY	TOTAL SHEETS	SHEET NO.
57	(10-31HB)BR	CHAMPAIGN	65	48
		CONTRACT NO. 70908		
FED. ROAD DIST. NO. 5	ILLINOIS	FED. AID PROJECT		

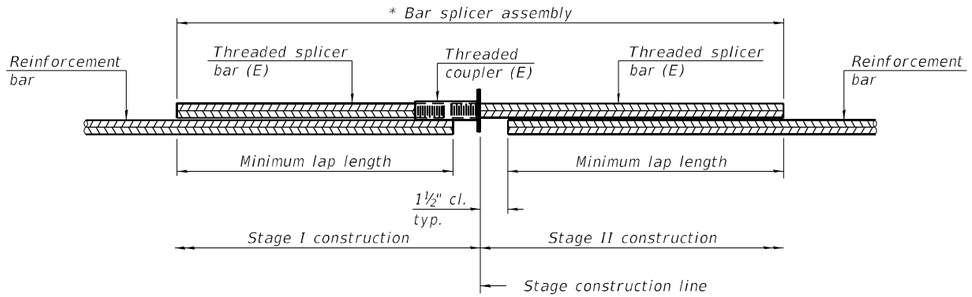

STANDARD BAR SPLICER ASSEMBLY PLAN

Only bar splicer assemblies as presented on the approved QPL list may be used.

Threaded splicer bar length = min. lap length + 1½" + thread length

* Epoxy not required on Bar Splicer Assembly components used in conjunction with black bars.

Location	Bar size	No. assemblies required	Minimum lap length

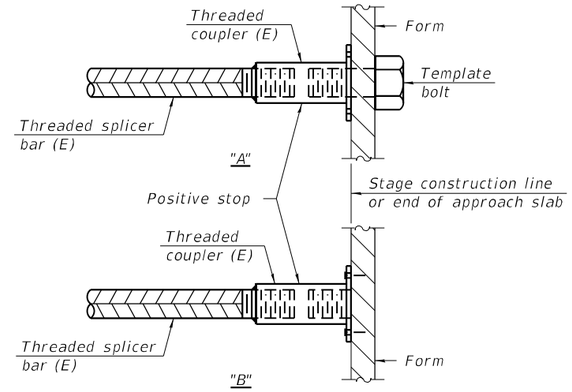

INSTALLATION AND SETTING METHODS

"A" : Set bar splicer assembly by means of a template bolt.
"B" : Set bar splicer assembly by nailing to wood forms or cementing to steel forms.
(E) : Indicates epoxy coating.

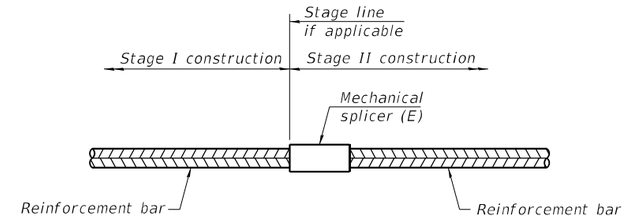

STANDARD MECHANICAL SPLICER

Location	Bar size	No. assemblies required
Pier	#7	60

Notes:
Splicer bars shall be deformed with threaded ends and have a minimum 60 ksi yield strength.
All reinforcement shall be lapped and tied to the splicer bars.
Bar splicer assemblies shall be epoxy coated according to the requirements for reinforcement bars. See Section 508 of the Standard Specifications.
See approved list of bar splicer assemblies and mechanical splicers for alternatives.

BSD-1 2-1-2023

MODEL:
FILE NAME: T:\TRGBusiness\Clients\IDOT\Projects\20-040 PTB 195-041 I-57 Bridge\400 CADD\CAD_Sheets\20-040 Bar Splicer.dgn

USER NAME = nickbrustin	DESIGNED - NMB	REVISED -	
	CHECKED - STB	REVISED -	
PLOT SCALE =	DRAWN - NMB	REVISED -	
PLOT DATE = 5/4/2023	CHECKED - STB	REVISED -	

STATE OF ILLINOIS
DEPARTMENT OF TRANSPORTATION

BAR SPLICER AND MECHANICAL SPLICER DETAILS
STRUCTURE NO. 010-0295
SHEET S19A OF S22 SHEETS

F.A.I. RTE.	SECTION	COUNTY	TOTAL SHEETS	SHEET NO.
57	(10-31HB)BR	CHAMPAIGN	65	48A
		CONTRACT NO. 70908		

FED. ROAD DIST. NO. 5 | ILLINOIS | FED. AID PROJECT

Illinois Department of Transportation
Division of Highways
Kaskaskia Engineering

SOIL BORING LOG

Date 4/29/21

ROUTE FAI 57 DESCRIPTION CH17 over I-57 LOGGED BY KEG

SECTION (10-31HB)BR LOCATION Champaign County, IL, SEC. , TWP. , RNG. ,
Latitude 39°58'1.6780 N , Longitude 88°18'13.9058 W

COUNTY Champaign DRILLING METHOD HSA HAMMER TYPE AUTO

STRUCT. NO. 010-0295
Station

BORING NO. SB-1
Station
Offset
Ground Surface Elev. 708.95 ft

Surface Water Elev. ft
Stream Bed Elev. ft

Groundwater Elev.:
First Encounter 654.5 ft ▼
Upon Completion ft
After Hrs. ft

Description	Elev.	DEPTH (ft)	BLOWS (/6")	UCS Qu (tsf)	MOIST (%)
ASPHALT PAVEMENT - 9"	708.20				
AGGREGATE BASE - 12"	707.20				
SILTY CLAY LOAM TILL FILL - Gray, medium-stiff			2		
			3	1.8	13
			3	B	
Atterberg Limits: LL=30, PL=16, PI=14			1		
			2	1.7	13
		-5	2	B	
becomes gray and brown, stiff			3		
			2	2.9	19
			5	B	
			3		
			4	5.0	13
		-10	6	B	
			3		
			3	2.4	13
			5	B	
becomes gray, medium-stiff			2		
			2	1.2	25
		-15	4	B	
no recovery			5		
			5		
			6		
becomes stiff			4		
			5	5.2	15
		-20	6	B	
SILTY CLAY LOAM TILL FILL - Gray, medium-stiff *(continued)*					
with trace organics	687.45		5		
CLAYEY SAND - Gray			7	4.4	16
			10	B	
	685.95				
CLAY LOAM - Brown and gray, stiff			5		
			8	4.2	21
		-25	10	B	
	682.95				
CLAY LOAM TILL - Brown, medium-stiff			2		
			3	2.2	11
			4	B	
	680.95				
SANDY CLAY LOAM TILL - Brown, moist, soft			3		
			1	0.5	10
		-30	2	B	
	676.95				
SILTY CLAY LOAM TILL - Brown, stiff			7		
			9	5.5	13
		-35	12	B	
becomes gray			6		
			7	7.2	12
		-40	10	S	

The Unconfined Compressive Strength (UCS) Failure Mode is indicated by (B-Bulge, S-Shear, P-Penetrometer)
The SPT (N value) is the sum of the last two blow values in each sampling zone (AASHTO T206)

BBS, form 137 (Rev. 8-99)

Illinois Department of Transportation
Division of Highways
Kaskaskia Engineering

SOIL BORING LOG

Date 4/29/21

ROUTE FAI 57 DESCRIPTION CH17 over I-57 LOGGED BY KEG

SECTION (10-31HB)BR LOCATION Champaign County, IL, SEC. , TWP. , RNG. ,
Latitude 39°58'1.6780 N , Longitude 88°18'13.9058 W

COUNTY Champaign DRILLING METHOD HSA HAMMER TYPE AUTO

STRUCT. NO. 010-0295
Station

BORING NO. SB-1
Station
Offset
Ground Surface Elev. 708.95 ft

Surface Water Elev. ft
Stream Bed Elev. ft

Groundwater Elev.:
First Encounter 654.5 ft ▼
Upon Completion ft
After Hrs. ft

Description	Elev.	DEPTH (ft)	BLOWS (/6")	UCS Qu (tsf)	MOIST (%)
SILTY CLAY LOAM TILL - Brown, stiff *(continued)*					
			4		
			5	3.3	14
		-45	7	B	
	659.95		4		
SILT - Gray, stiff			5	3.1	13
		-50	7	B	
	657.95				
SILTY CLAY LOAM TILL - Gray, stiff					
	654.45		6		
			7	6.1	13
		-55	9	B	
FINE to COARSE SAND - Gray, dense, wet					
	651.45				
SILTY CLAY LOAM TILL - Gray, stiff			4		
			5	2.8	11
		-60	7	B	
SILTY CLAY LOAM TILL - Gray, stiff *(continued)*					
becomes brown			12		
Poor recovery - rock in shoe			19		10
		-65	23		
becomes gray			10		
			10	4.2	15
		-70	14	B	
	636.45				
SILT - Gray, stiff			8		
			10	3.3	26
	633.95	-75	13	B	
End of Boring					
		-80			

The Unconfined Compressive Strength (UCS) Failure Mode is indicated by (B-Bulge, S-Shear, P-Penetrometer)
The SPT (N value) is the sum of the last two blow values in each sampling zone (AASHTO T206)

BBS, form 137 (Rev. 8-99)

BORING SB-1 LOCATION

Station: 28+67.73
Offset: 6.25' RT

MODEL:
FILE NAME: T:\TRG\Business\Clients\IDOT\Projects\20-040 PTB 195-041 I-57 Bridges\400 CADD\CAD_Sheets\20-040-Soil Boring-1.dgn

Ardmore Roderick

USER NAME = nickbrustin	DESIGNED - NMB	REVISED -	
	CHECKED - STB	REVISED -	
PLOT SCALE =	DRAWN - NMB	REVISED -	
PLOT DATE = 5/4/2023	CHECKED - STB	REVISED -	

STATE OF ILLINOIS
DEPARTMENT OF TRANSPORTATION

SOIL BORING LOG SHEET 1 OF 3
STRUCTURE NO. 010-0295
SHEET S20 OF S22 SHEETS

F.A.I. RTE.	SECTION	COUNTY	TOTAL SHEETS	SHEET NO.
57	(10-31HB)BR	CHAMPAIGN	65	49
		CONTRACT NO. 70908		

FED. ROAD DIST. NO. 5 | ILLINOIS | FED. AID PROJECT

Illinois Department of Transportation
Division of Highways
Kaskaskia Engineering

SOIL BORING LOG

Date 4/27/21

ROUTE FAI 57 DESCRIPTION CH17 over I-57 LOGGED BY KEG

SECTION (10-31HB)BR LOCATION Champaign County, IL, SEC. , TWP. , RNG. ,
Latitude 39°58'1.7705 N , Longitude 88°18'10.7566 W

COUNTY Champaign DRILLING METHOD HSA HAMMER TYPE AUTO

STRUCT. NO. 010-0295
Station
BORING NO. SB-2
Station
Offset
Ground Surface Elev. 689.13 ft

Surface Water Elev. ft
Stream Bed Elev. ft
Groundwater Elev.:
First Encounter 625.6 ft ▼
Upon Completion ft
After Hrs. ft

Description	DEPTH (ft)	BLOWS (/6")	UCS Qu (tsf)	MOIST (%)
SILT - Brown, stiff, with gravel		6		
		6 7	4.0 P	11
686.13				
CLAY - Brown, medium-stiff, with gravel and trace sand		3		
		3 4	1.2 B	19
	-5			
683.63				
SILTY CLAY LOAM TILL - Brown, stiff		3		
		6 6	3.2 B	13
		3		
		5 7	4.6 B	14
	-10			
		4		
		8 12	7.6 B	13
		5		
becomes gray		9 11	5.5 B	11
	-15			
		7		
		8 11	6.9 B	11
		6		
		8 9	7.1 B	11
	-20			

Description	DEPTH (ft)	BLOWS (/6")	UCS Qu (tsf)	MOIST (%)
SILTY CLAY LOAM TILL - Brown, stiff *(continued)*		5		
		6 8	4.8 B	13
becomes medium-stiff		2		
		5 7	2.6 B	13
	-25			
becomes stiff		4		
		5 8	3.9 B	12
		4		
		9 9	3.3 B	12
	-30			
		3		
		5 8	3.5 P	14
	-35			
becomes medium-stiff		4		
		5 7	2.4 B	12
	-40			

The Unconfined Compressive Strength (UCS) Failure Mode is indicated by (B-Bulge, S-Shear, P-Penetrometer)
The SPT (N value) is the sum of the last two blow values in each sampling zone (AASHTO T206)

BBS, form 137 (Rev. 8-99)

Illinois Department of Transportation
Division of Highways
Kaskaskia Engineering

SOIL BORING LOG

Date 4/27/21

ROUTE FAI 57 DESCRIPTION CH17 over I-57 LOGGED BY KEG

SECTION (10-31HB)BR LOCATION Champaign County, IL, SEC. , TWP. , RNG. ,
Latitude 39°58'1.7705 N , Longitude 88°18'10.7566 W

COUNTY Champaign DRILLING METHOD HSA HAMMER TYPE AUTO

STRUCT. NO. 010-0295
Station
BORING NO. SB-2
Station
Offset
Ground Surface Elev. 689.13 ft

Surface Water Elev. ft
Stream Bed Elev. ft
Groundwater Elev.:
First Encounter 625.6 ft ▼
Upon Completion ft
After Hrs. ft

Description	DEPTH (ft)	BLOWS (/6")	UCS Qu (tsf)	MOIST (%)
SILTY CLAY LOAM TILL - Brown, stiff *(continued)*				
becomes brown, stiff		7		
		12 19	9.9 B	10
	-45			
becomes gray		8		
		10 12	8.7 B	17
	-50			
		5		
		8 10	3.9 B	13
	-55			
		5		
		8 11	4.6 B	9
	-60			

Description	DEPTH (ft)	BLOWS (/6")	UCS Qu (tsf)	MOIST (%)
SILTY CLAY LOAM TILL - Brown, stiff *(continued)*				
	▼	16		
becomes wet		31 50	6.1 B	8
624.13	-65			
Auger refusal on dense glacial till Boring terminated at 65' End of Boring				
	-70			
	-75			
	-80			

The Unconfined Compressive Strength (UCS) Failure Mode is indicated by (B-Bulge, S-Shear, P-Penetrometer)
The SPT (N value) is the sum of the last two blow values in each sampling zone (AASHTO T206)

BBS, form 137 (Rev. 8-99)

BORING SB-2 LOCATION

Station: 29+83.86
Offset: 21.83' RT

MODEL:
FILE NAME: T:\TRG\Business\Clients\IDOT\Projects\20-040 PTB 195-041 I-57 Bridge\400 CADD\CAD_Sheets\20-040-Soil Boring-2.dgn

Ardmore Roderick

USER NAME = nickbrustin	DESIGNED - NMB	REVISED -	
	CHECKED - STB	REVISED -	
PLOT SCALE =	DRAWN - NMB	REVISED -	
PLOT DATE = 5/4/2023	CHECKED - STB	REVISED -	

STATE OF ILLINOIS
DEPARTMENT OF TRANSPORTATION

SOIL BORING LOG SHEET 2 OF 3
STRUCTURE NO. 010-0295
SHEET S21 OF S22 SHEETS

F.A.I. RTE.	SECTION	COUNTY	TOTAL SHEETS	SHEET NO.
57	(10-31HB)BR	CHAMPAIGN	65	50
		CONTRACT NO. 70908		

FED. ROAD DIST. NO. 5 | ILLINOIS | FED. AID PROJECT

Illinois Department of Transportation
Division of Highways
Kaskaskia Engineering

SOIL BORING LOG

Date 4/30/21

ROUTE FAI 57 DESCRIPTION CH17 over I-57 LOGGED BY KEG

SECTION (10-31HB)BR LOCATION Champaign County, IL, SEC. , TWP. , RNG. ,
Latitude 39°58'1.5086 N , Longitude 88°18'12.4168 W

COUNTY Champaign DRILLING METHOD HSA HAMMER TYPE AUTO

STRUCT. NO. 010-0295
Station
BORING NO. SB-3
Station
Offset
Ground Surface Elev. 709.19 ft

Surface Water Elev. ft
Stream Bed Elev. ft
Groundwater Elev.:
First Encounter 682.2 ft ▼
Upon Completion ft
After Hrs. ft

Description	Elev.	DEPTH (ft)	BLOWS (/6")	UCS Qu (tsf)	MOIST (%)
ASPHALT PAVEMENT - 9"	708.44				
AGGREGATE BASE - 9"	707.69				
SANDY CLAY FILL - Brown, medium-stiff, with gravel			7		
			4	2.6	6
			4	B	
Atterberg Limits: LL=28, PL=15, PI=13			2		
			2	1.8	14
		-5	3	B	
	703.69				
SILTY CLAY LOAM TILL FILL - Brown, stiff			3		
			6	4.2	12
			6	B	
Poor recovery			3		
			4	3.5	12
		-10	5	P	
			3		
			4	5.0	12
			5	B	
			3		
			4	3.9	12
		-15	5	S	
Poor recovery			4		
			5	3.5	12
			5	P	
			4		
			5	4.2	14
		-20	6	B	
SILTY CLAY LOAM TILL FILL - Brown, stiff *(continued)*					
with organics	687.69		5		
SILTY CLAY LOAM TILL - Brown, stiff			10	6.1	17
			9	S	
			4		
			5	3.1	17
		-25	6	B	
becomes medium-stiff			2		
	682.19 ▼		1	1.1	17
CLAYEY SAND - Brown, with gravel, wet			2	B	
			4		
	679.69		6	7.2	11
SILTY CLAY LOAM TILL - Brown, stiff		-30	10	B	
			8		
			9	8.7	11
becomes gray		-35	12	S	
			7		
			8	10.0	10
		-40	11	B	

The Unconfined Compressive Strength (UCS) Failure Mode is indicated by (B-Bulge, S-Shear, P-Penetrometer)
The SPT (N value) is the sum of the last two blow values in each sampling zone (AASHTO T206)

BBS, form 137 (Rev. 8-99)

Illinois Department of Transportation
Division of Highways
Kaskaskia Engineering

SOIL BORING LOG

Date 4/30/21

ROUTE FAI 57 DESCRIPTION CH17 over I-57 LOGGED BY KEG

SECTION (10-31HB)BR LOCATION Champaign County, IL, SEC. , TWP. , RNG. ,
Latitude 39°58'1.5086 N , Longitude 88°18'12.4168 W

COUNTY Champaign DRILLING METHOD HSA HAMMER TYPE AUTO

STRUCT. NO. 010-0295
Station
BORING NO. SB-3
Station
Offset
Ground Surface Elev. 709.19 ft

Surface Water Elev. ft
Stream Bed Elev. ft
Groundwater Elev.:
First Encounter 682.2 ft ▼
Upon Completion ft
After Hrs. ft

Description	Elev.	DEPTH (ft)	BLOWS (/6")	UCS Qu (tsf)	MOIST (%)
SILTY CLAY LOAM TILL - Brown, stiff *(continued)*					
becomes brown			7		
			14	10.0	11
		-45	11	B	
			7		
			8	8.1	12
		-50	13	B	
			9		
			12	8.1	12
		-55	15	B	
			6		
			9	7.4	11
		-60	11	B	
SILTY CLAY LOAM TILL - Brown, stiff *(continued)*					
Poor recovery			12		
			18	4.5	10
		-65	25	P	
			13		
			13	7.2	12
		-70	13	B	
			6		
	634.19	-75	9	3.1	14
			12	B	
End of Boring					
		-80			

The Unconfined Compressive Strength (UCS) Failure Mode is indicated by (B-Bulge, S-Shear, P-Penetrometer)
The SPT (N value) is the sum of the last two blow values in each sampling zone (AASHTO T206)

BBS, form 137 (Rev. 8-99)

BORING SB-3 LOCATION
Station: 31+12.76
Offset: 6.5' LT

MODEL:
FILE NAME: T:\TRGBusiness\Clients\IDOT\Projects\20-240 PTB 195-041 I-57 Bridge\400 CADD\CAD_Sheets\20-040-Soil Boring-3.dgn

Ardmore Roderick

USER NAME = nickbrustin	DESIGNED - NMB	REVISED -	
	CHECKED - STB	REVISED -	
PLOT SCALE =	DRAWN - NMB	REVISED -	
PLOT DATE = 5/4/2023	CHECKED - STB	REVISED -	

STATE OF ILLINOIS
DEPARTMENT OF TRANSPORTATION

SOIL BORING LOG SHEET 3 OF 3
STRUCTURE NO. 010-0295
SHEET S22 OF S22 SHEETS

F.A.I. RTE.	SECTION	COUNTY	TOTAL SHEETS	SHEET NO.
57	(10-31HB)BR	CHAMPAIGN	65	51
		CONTRACT NO. 70908		
FED. ROAD DIST. NO. 5	ILLINOIS	FED. AID PROJECT		

ROAD CLOSURE

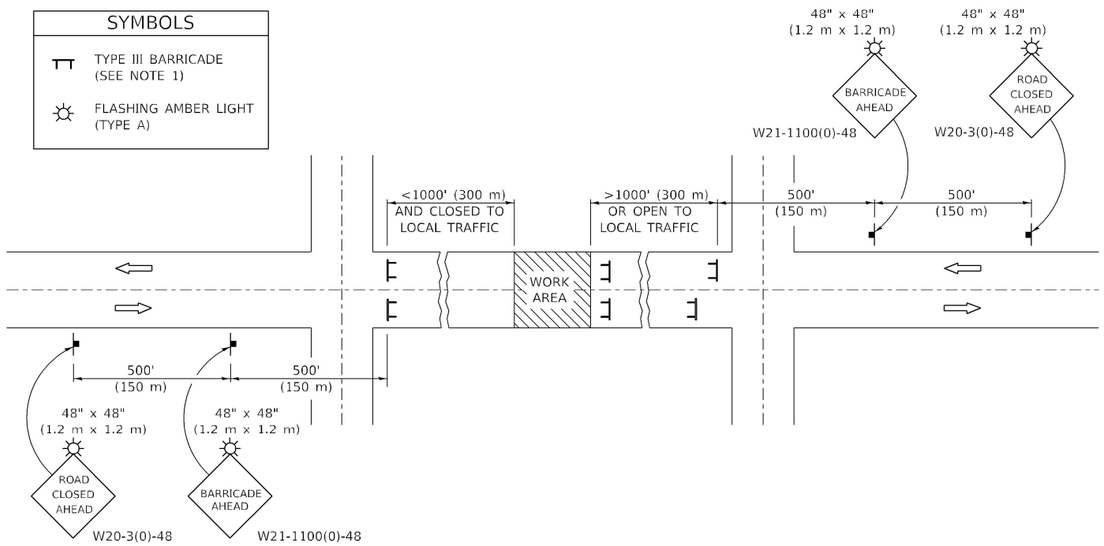

GENERAL NOTES

1. TYPE III BARRICADES SHALL BE AS SHOWN ON STANDARD 701901 "TYPICAL APPLICATIONS OF TYPE III BARRICADES CLOSING A ROAD". EACH TYPE III BARRICADE SHALL HAVE TWO FLASHING AMBER LIGHTS MOUNTED ABOVE IT.
2. IF THE ROAD IS OPEN TO LOCAL TRAFFIC OR EXCEEDS 1000' (300 m), ANOTHER SET OF TYPE III BARRICADES, EQUIPPED AS IN NOTE 1 ABOVE, SHALL BE PLACED AT EACH END OF THE WORK AREA.
3. WHEN A STOP CONDITION EXISTS, NO SIGNS ARE REQUIRED IN ADVANCE OF THE "STOP" SIGN WHEN THE ROAD IS CLOSED WITHIN 100' (30 m) OF THE INTERSECTION.
4. STANDARD 701901 SHALL APPLY FOR THE PLACEMENT & DESIGN OF TYPE III BARRICADES.
5. IF A TYPE III BARRICADE WITH AN ATTACHED SIGN PANEL WHICH MEETS NCHRP 350 IS NOT AVAILABLE, THE SIGNS MAY BE MOUNTED ON AN NCHRP 350 TEMPORARY SIGN SUPPORT DIRECTLY IN FRONT OF THE BARRICADE.
6. REFLECTORIZED STRIPING SHALL APPEAR ON BOTH SIDES OF THE TY III BARRICADES IF ROAD IS OPEN TO LOCAL TRAFFIC.
7. ALL SIGNS SHALL BE POST MOUNTED IF THE CLOSURE TIME EXCEEDS FOUR DAYS.
8. A MINIMUM OF TWO FLASHING LIGHTS SHALL BE USED AT NIGHT ON EACH APPROACH IN ADVANCE OF THE WORK AREA. FLASHING LIGHTS SHALL BE INSTALLED ABOVE THE FIRST TWO SIGNS IN THE SERIES.
9. LONGITUDINAL DIMENSIONS MAY BE ADJUSTED SLIGHTLY TO FIT FIELD CONDITIONS.
10. FORMS BT. 725 AND BT. 726 ARE REQUIRED.
11. WHEN A SIDEROAD INTERSECTS THE HIGHWAY ON WHICH WORK IS BEING PERFORMED, ADDITIONAL TRAFFIC DEVICES SHALL BE ERECTED AND PROVIDED AS DIRECTED BY THE ENGINEER.
12. AN ADDITIONAL SIGN MAY BE REQUIRED AT A MAJOR INTERSECTING ROAD IN ADVANCE OF THE CLOSURE. THE ADDITIONAL SIGN SHALL GIVE THE DISTANCE TO THE BARRICADE IN MILES OR FRACTIONS OF A MILE.

= SPECIALTY ITEM

SIDEROAD / STREET CLOSURE

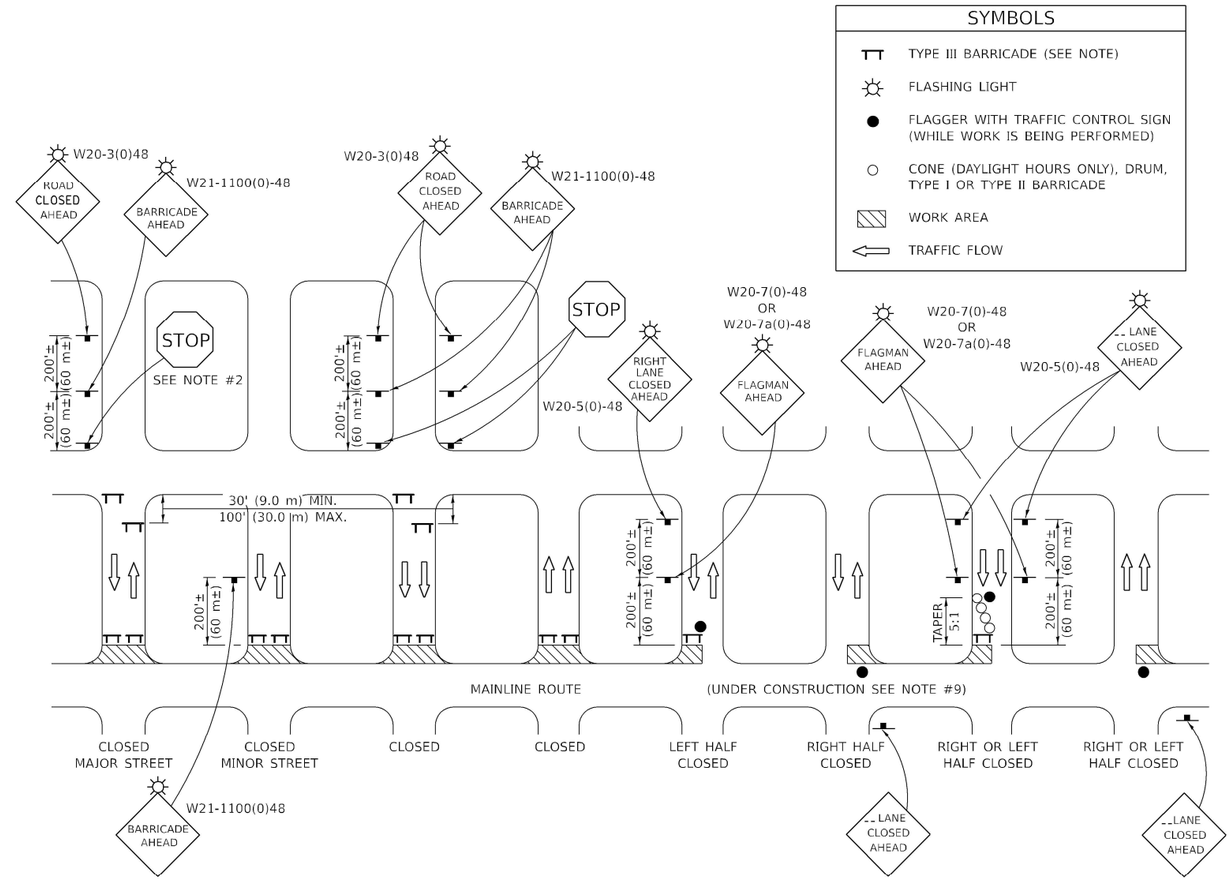

GENERAL NOTES

1. TYPE III BARRICADES SHALL BE AS SHOWN ON "TYPICAL APPLICATIONS OF TYPE III BARRICADES CLOSING A ROAD". EACH TYPE III BARRICADE SHALL HAVE TWO FLASHING AMBER LIGHTS MOUNTED ABOVE IT.
2. WHERE A STOP CONDITION EXISTS, AS SHOWN ABOVE, WARNING SIGNS MAY BE OMITTED IN ADVANCE OF THE "STOP" SIGN.
3. STANDARD 701901 SHALL APPLY FOR THE PLACEMENT & MANUFACTURE OF TYPE III BARRICADES.
4. ALL SIGNS SHALL BE POST MOUNTED IF THE CLOSURE TIME EXCEEDS FOUR DAYS.
5. ONE FLASHING LIGHT IS REQUIRED ABOVE EACH ADVANCE WARNING SIGN DURING HOURS OF DARKNESS.
6. LONGITUDINAL DIMENSIONS MAY BE ADJUSTED SLIGHTLY TO FIT FIELD CONDITIONS.
7. FORMS BT 725 AND BT 726 ARE REQUIRED.
8. THE MAINLINE ROUTE TEMPORARY TRAFFIC CONTROL SHALL BE IN ACCORDANCE WITH THE PLANS, SPECIAL PROVISIONS AND STANDARD SPECIFICATIONS.
9. ALL FLAGGERS REQUIRED AT SIDE ROADS AND ENTRANCES REMAINING OPEN TO TRAFFIC AND/OR ADDITIONAL BARRICADES REQUIRED BY THE ENGINEER TO CLOSE SIDE ROADS AND ENTRANCES WILL BE PAID FOR ACCORDING TO ARTICLE 109.04.

Note: All dimensions are in INCHES (millimeters) unless otherwise shown.

DISTRICT 5 DETAIL NO. 70200000

Kaskaskia Engineering Group, LLC
PROFESSIONAL REGISTRATIONS: Illinois Professional Design Firm 184-004773; Professional Engineering Group 20-3585586

USER NAME = hpapproth	DESIGNED -	REVISED -	
	DRAWN -	REVISED -	
PLOT SCALE = 0.16666633 ' / in.	CHECKED -	REVISED -	
PLOT DATE = 3/22/2023	DATE -	REVISED -	

STATE OF ILLINOIS
DEPARTMENT OF TRANSPORTATION

DISTRICT 5 STANDARD DETAILS

SCALE: | SHEET 2 OF 3 SHEETS | STA. | TO STA. ____

F.A.I. RTE.	SECTION	COUNTY	TOTAL SHEETS	SHEET NO.
57	(10-30)BR	CHAMPAIGN	65	52
		CONTRACT NO. 70A87		
		ILLINOIS	FED. AID PROJECT	

MODEL: 70200000
FILE NAME: P:\20-105931 Phase II IL57 under CH170_IDOT\CAD_Sheets\D570908-sht-HDOTSt4.dgn

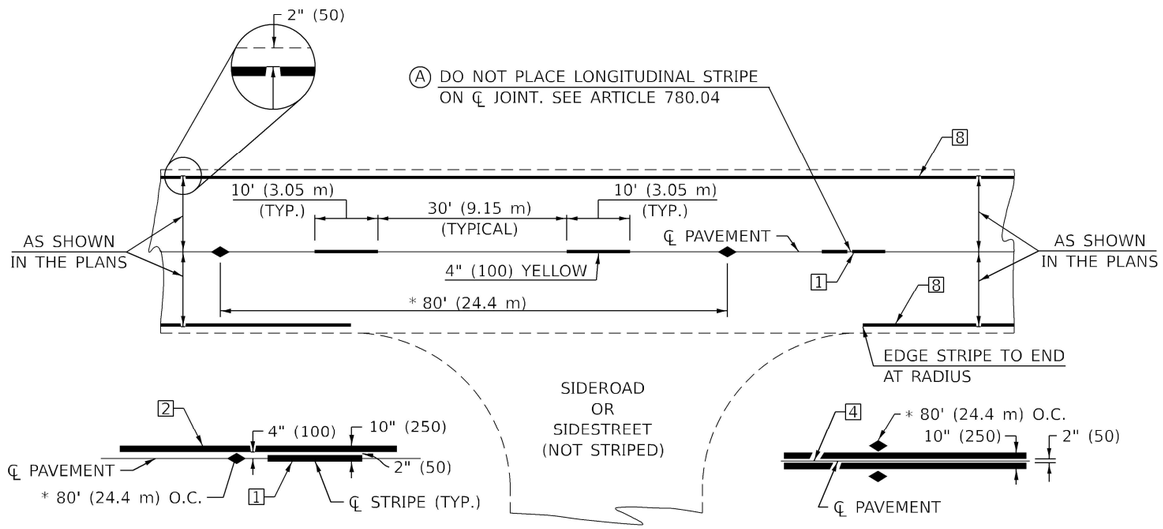

SINGLE NO PASSING

DOUBLE NO PASSING

* REDUCE TO 40' (12.2 m) O.C. ON CURVES WITH POSTED OR ADVISORY SPEEDS OF 45 mph (70 km/h) OR LESS.

TWO LANE/TWO WAY

TYPICAL PAVEMENT MARKING LEGEND

1. 4" (100) SKIP-DASH (YELLOW)
2. 4" (100) SOLID (YELLOW)
3. 12" (300) DIAGONAL (YELLOW)
4. 4" (100) DOUBLE YELLOW (NARROW)
5. RESERVED
6. RESERVED
7. 4" (100) SKIP-DASH (WHITE)
8. 4" (100) SOLID (WHITE)
9. 12" (300) DIAGONAL (WHITE)
10. 6" (150) SOLID (WHITE)
11. 24" (600) STOP BAR (WHITE)
12. 8" (200) SOLID (WHITE)
13. 4" (100) LANE LINE EXTENSIONS (WHITE)
14. 4" (100) PARKING WHITE

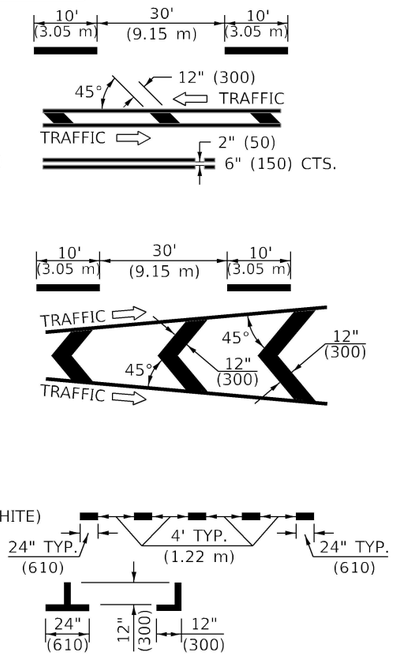

TYPICAL PAVEMENT MARKERS LEGEND

- ◆ TWO-WAY AMBER MARKER
- ▶ ONE-WAY AMBER MARKER
- ▷ ONE-WAY CRYSTAL MARKER

RURAL LEFT TURN

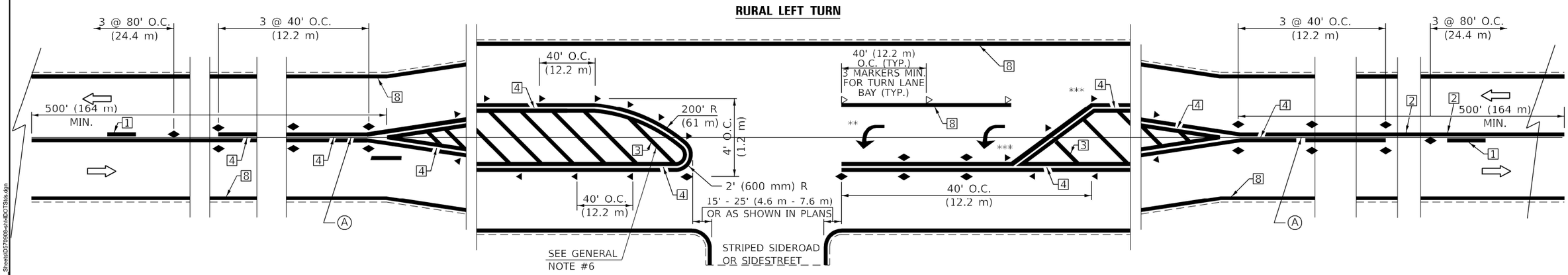

*** REDUCE SPACING IF NECESSARY TO ASSURE MARKERS AT CORNER POINTS.

** TURN ARROWS SHALL BE PLACED AS SHOWN ON SHEET #2.

Note: All dimensions are in INCHES (millimeters) unless otherwise shown.

= SPECIALTY ITEM

DISTRICT 5 DETAIL NO. 7800AAAA

F.A.I. RTE.	SECTION	COUNTY	TOTAL SHEETS	SHEET NO.
57	(10-30)BR	CHAMPAIGN	65	53
		CONTRACT NO. 70908		
		ILLINOIS	FED. AID PROJECT	

Kaskaskia Engineering Group, LLC
PROFESSIONAL REGISTRATIONS: Illinois Professional Design Firm 184.004773; Professional Engineering Group 20-5080006
LICENSING NO.
20 E. Main St., Suite 300, Belleville, IL 62220; 618.233.5672 phone; 618.233.5677 fax; www.kaskaskiaeng.com

USER NAME = hpapproth	DESIGNED -	REVISED -	
	DRAWN -	REVISED -	
PLOT SCALE = 0.16666633 ' / in.	CHECKED -	REVISED -	
PLOT DATE = 3/22/2023	DATE -	REVISED -	

STATE OF ILLINOIS
DEPARTMENT OF TRANSPORTATION

DISTRICT 5 STANDARD DETAILS

SCALE: SHEET 2 OF 3 SHEETS STA. TO STA. ____

MODEL: 7800AAAA
FILE NAME: P:\20-1059.01 Phase II IL57 under CH170_IDOT\CAD_Sheets\D5780084-sht-IDOTSlts.dgn

URBAN LEFT TURN

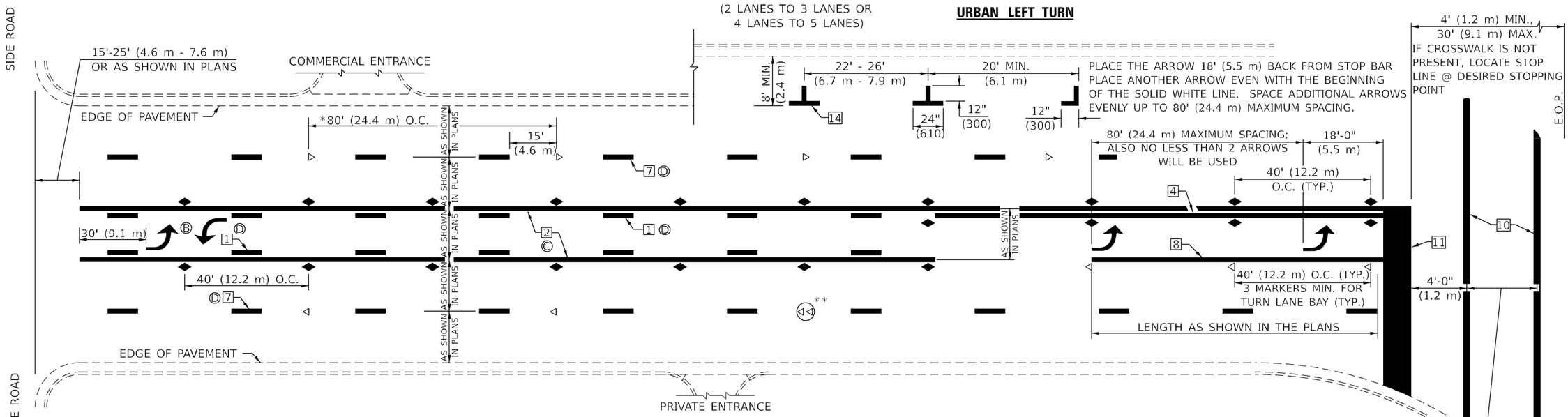

* REDUCE TO 40 FEET (12.2 METERS) ON CENTER ON CURVES WHERE ADVISORY SPEEDS ARE 10 MPH (15 km/h) LOWER THAN POSTED SPEEDS.

** DOUBLE LANE LINE MARKERS SHALL BE SPECIFIED AND SPACED AS SHOWN IN HIGHWAY STANDARD 781001 FOR MULTI-LANE DIVIDED AND UNDIVIDED HIGHWAYS.

GENERAL NOTES:

Ⓑ TURN ARROW PAIRS SHALL BE PLACED AT 250' (75 m) INTERVALS AND SHALL BE EVENLY SPACED BETWEEN BOTH ENDS OF THE BIDIRECTIONAL LEFT TURN LANE.

Ⓒ THE SOLID YELLOW PAVEMENT MARKINGS 2 SHOULD GENERALLY START OR END NEAR THE RADIUS POINT OF EACH STREET RETURN EXCEPT WHERE ONE OR BOTH ENDS WOULD INCLUDE STOP BARS.

Ⓓ THE SKIP-DASH PAVEMENT MARKINGS 1 OR 7 SHOULD BE CENTERED BETWEEN BOTH ENDS OF EACH CITY BLOCK AND SHALL BE PLACED SO THEY LINE UP ACROSS FROM EACH OTHER. SEE EXAMPLE ON SHEET 2 OF 3.

Ⓔ USE LARGE ARROW SIZE FOR BOTH RURAL AND URBAN LOCATIONS. (SEE LAST PAGE OF SECTION 780x FOR SYMBOLS TABLE)

= SPECIALTY ITEM

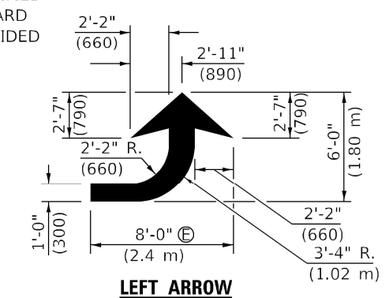

LEFT ARROW

REVERSE FOR RIGHT ARROW
AREA = 15.6 SQ. FT. (1.47 m^2)
(WHITE)

BLOOMINGTON–NORMAL CITY LIMITS ONLY

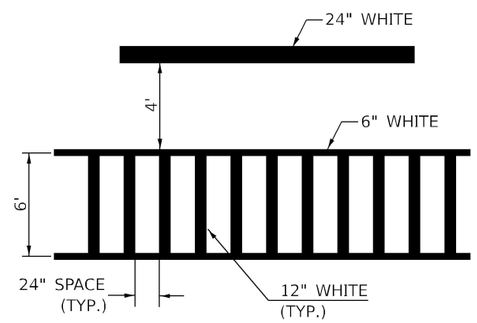

TYPICAL SPACING FOR CROSSWALKS & STOP BARS

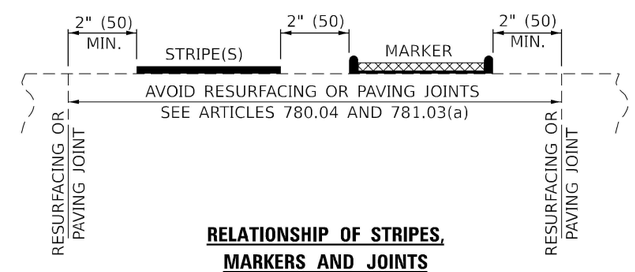

RELATIONSHIP OF STRIPES, MARKERS AND JOINTS

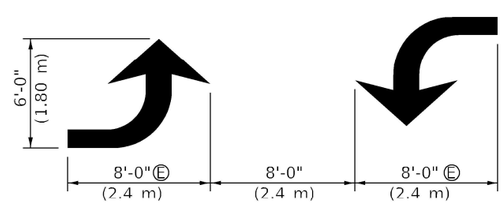

TYPICAL DOUBLE TURN ARROWS (WHITE)

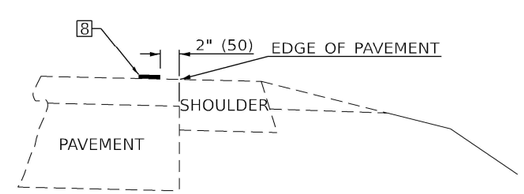

RELATIONSHIP OF EDGE LINE TO EDGE OF PAVEMENT

(SAFETY SHOULDER OR PAVED SURFACE)
SEE ARTICLE 780.04

Note: All dimensions are in INCHES (millimeters) unless otherwise shown.

DISTRICT 5 DETAIL NO. 7800AAAA

F.A.I. RTE.	SECTION	COUNTY	TOTAL SHEETS	SHEET NO.
57	(10-30)BR	CHAMPAIGN	65	54
		CONTRACT NO. 70908		
		ILLINOIS	FED. AID PROJECT	

Kaskaskia Engineering Group, LLC
PROFESSIONAL REGISTRATIONS: Illinois Professional Design Firm 184-001773; Professional Engineering Group 20-1018586

USER NAME = hpapproth	DESIGNED -	REVISED -	
	DRAWN -	REVISED -	
PLOT SCALE = 0.16666633 ' / in.	CHECKED -	REVISED -	
PLOT DATE = 3/22/2023	DATE -	REVISED -	

STATE OF ILLINOIS
DEPARTMENT OF TRANSPORTATION

DISTRICT 5 STANDARD DETAILS

SCALE: SHEET 2 OF 3 SHEETS STA. TO STA. ____

MODEL: 7800AAAA-2
FILE NAME: P:\20-105931 Phase II IL57 under CH170_IDOT\CAD Sheets\D572908-sht-IDOTSta.dgn

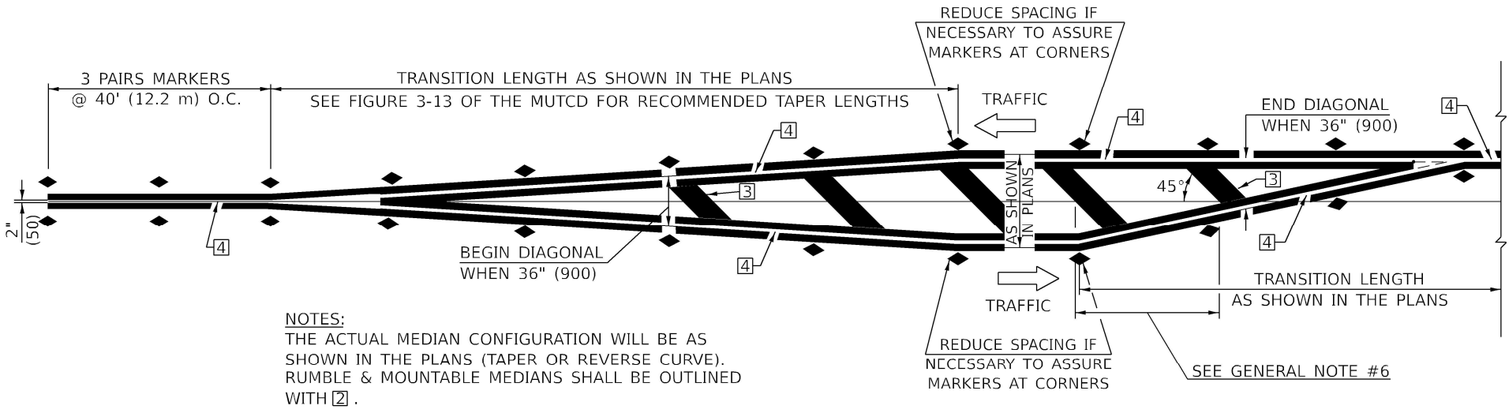

NOTES:
THE ACTUAL MEDIAN CONFIGURATION WILL BE AS SHOWN IN THE PLANS (TAPER OR REVERSE CURVE). RUMBLE & MOUNTABLE MEDIANS SHALL BE OUTLINED WITH 2 .

TYPICAL MEDIAN TRANSITIONS

GENERAL NOTES

1. WHEN MEDIANS ARE PRESENT, PAVEMENT MARKINGS ARE TO BE PLACED ADJACENT TO MEDIANS.
2. SOME OF THE INFORMATION INCLUDED WITH THIS DETAIL MAY NOT BE APPLICABLE TO THIS IMPROVEMENT.
3. PAVEMENT MARKINGS ARE TO BE EXTENDED THROUGH OMISSIONS WHEN APPLICABLE.
4. A STRIPING KEY IS AVAILABLE ELSEWHERE AND SHALL BE SHOWN WHERE THE QUANTITIES ARE LISTED.
5. FINAL PAVEMENT MARKINGS SHALL BE IN PLACE PRIOR TO PLACING ANY RAISED REFLECTIVE PAVEMENT MARKERS.
6. THE FOLLOWING CRITERIA SHALL BE USED FOR SELECTING THE DIAGONAL PAVEMENT MARKING SPACING,
   <30 MPH USE 15' (<50 km/h USE 4.5 m)
   30-45 MPH USE 20' (50-75 km/h USE 6.0 m)
   >45 MPH USE 30' (>75 km/h USE 9.0 m)

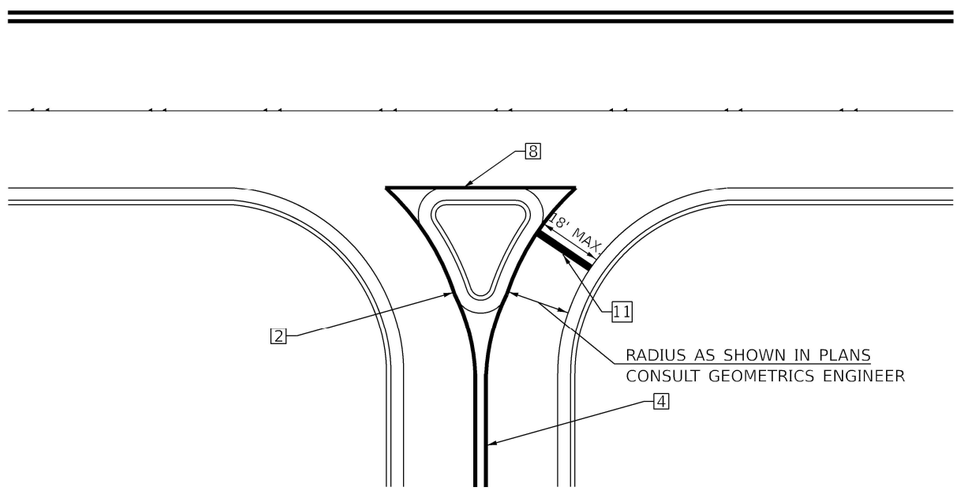

RIGHT IN – RIGHT OUT ACCESS

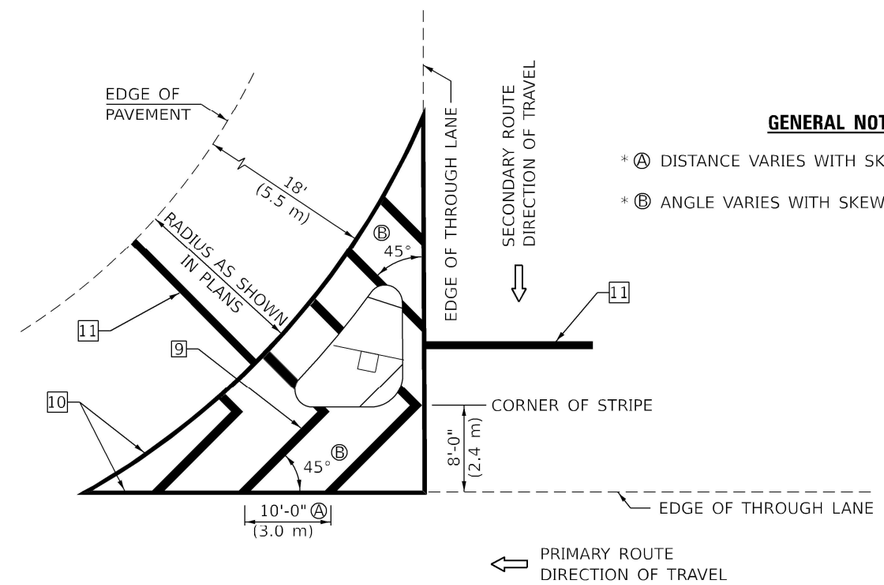

GENERAL NOTES

* Ⓐ DISTANCE VARIES WITH SKEW OF INTERSECTION.
* Ⓑ ANGLE VARIES WITH SKEW OF INTERSECTION.

ISLAND

* FOR RIGHT TURN LANE AND ISLAND STRIPING CONSULT GEOMETRICS ENGINEER.

Note: All dimensions are in INCHES (millimeters) unless otherwise shown.

= SPECIALTY ITEM

DISTRICT 5 DETAIL NO. 7800AAAA

F.A.I. RTE.	SECTION	COUNTY	TOTAL SHEETS	SHEET NO.
57	(10-30)BR	CHAMPAIGN	65	55
		CONTRACT NO. 70908		
		ILLINOIS	FED. AID PROJECT	

Kaskaskia Engineering Group, LLC
PROFESSIONAL REGISTRATIONS: Illinois Professional Design Firm Professional Engineering Group
LICENSE NO.: 184.004793 28-5040586
209 E. Main St., Suite 300 Belleville, IL 62220 618.233.5672 phone 618.233.5677 fax www.kaskaskiaeng.com

USER NAME = hpapproth	DESIGNED -	REVISED -	
	DRAWN -	REVISED -	
PLOT SCALE = 0.16666633 ' / in.	CHECKED -	REVISED -	
PLOT DATE = 3/22/2023	DATE -	REVISED -	

STATE OF ILLINOIS
DEPARTMENT OF TRANSPORTATION

DISTRICT 5 STANDARD DETAILS

SCALE: SHEET 2 OF 3 SHEETS STA. TO STA. ____

MODEL: 7800AAAA - 3
FILE NAME: P:\ds-1059.01 Phase II IL57 under OH17\0_IDOT\CAD_Sheets\DS79308-sht\HDOTSlts.dgn

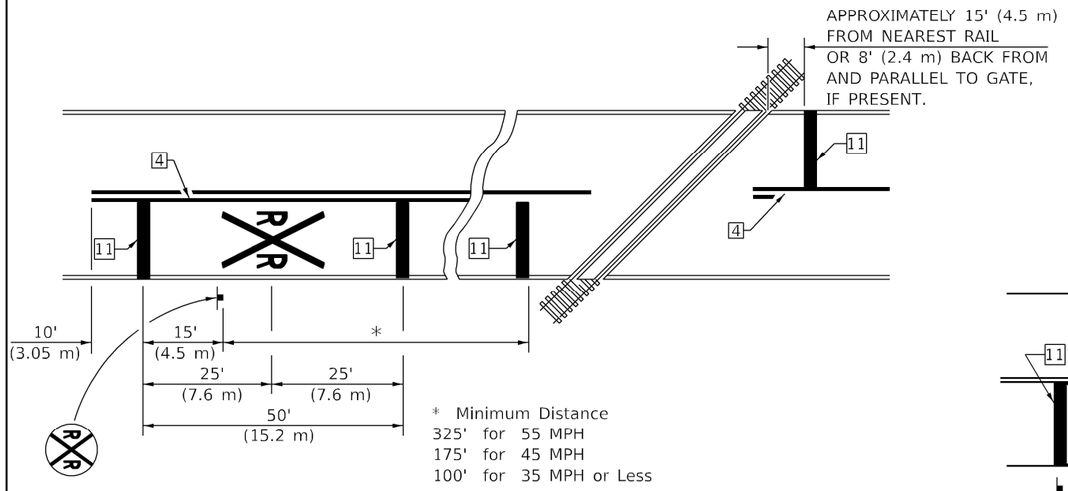

PAVEMENT MARKINGS AT RAILROAD–HIGHWAY GRADE CROSSING

RAILROAD CROSSING WITH INTERCONNECT ONLY

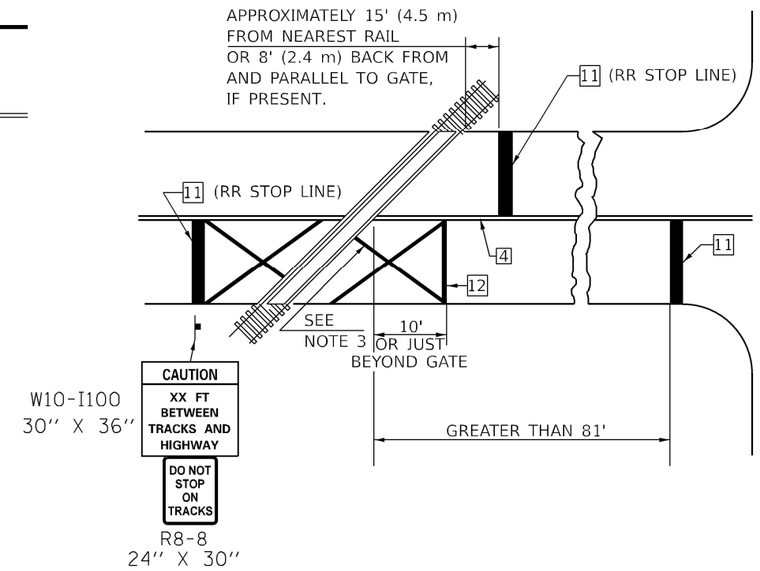

RAILROAD CROSSING WITH INTERCONNECT AND PRE–SIGNALS

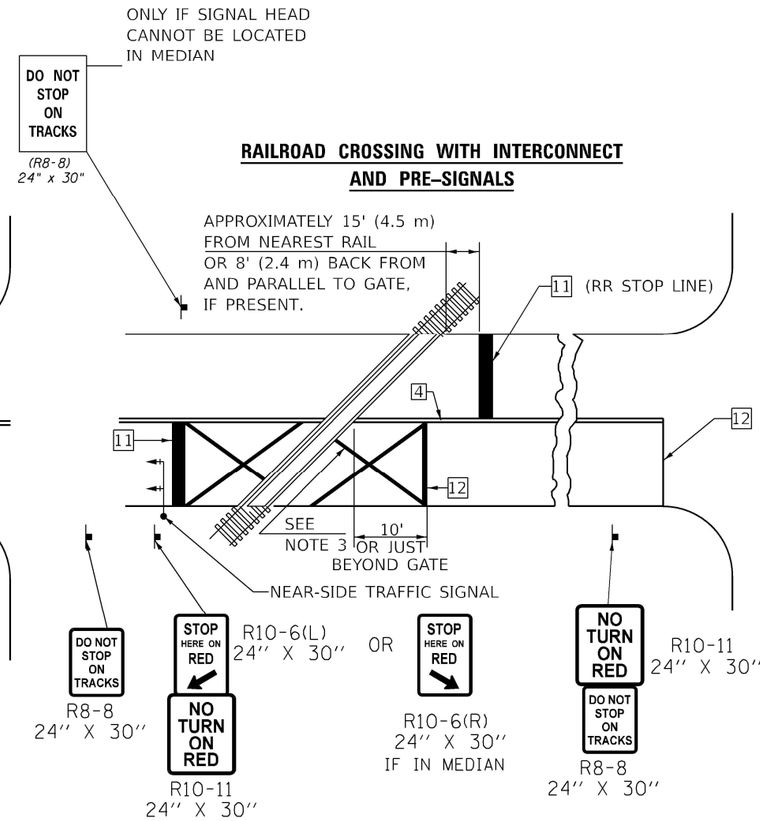

SUPPLEMENTAL PAVEMENT MARKING TREATMENT FOR RAILROAD–HIGHWAY GRADE CROSSING

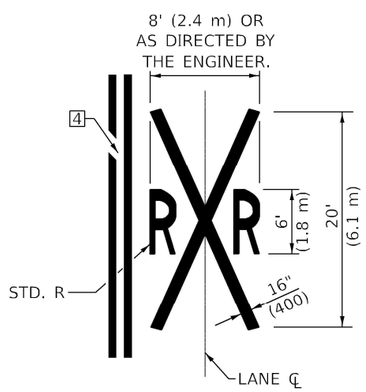

GENERAL NOTES

1. SUPPLEMENTAL PAVEMENT MARKINGS TO BE INSTALLED ONLY ON APPROACHES TO INTERSECTIONS CONTROLLED BY TRAFFIC SIGNALS WHICH ARE INTERCONNECTED WITH THE RAILROAD WARNING SIGNALS.

2. EXTEND PAVEMENT MARKINGS TO THE INTERSECTION ONLY WHERE NEAR-SIDE TRAFFIC SIGNALS ARE USED.

3. 6" WHITE PAVEMENT MARKINGS AT 45° TO PAVEMENT, 8' CENTER TO CENTER.

4. XX DISTANCE TO BE SHOWN ON SIGN MEASURED FROM A POINT 6 FEET FROM THE RAIL CLOSEST TO THE INTERSECTION OR FROM THE CLOSEST POINT ALONG THE EXIT GATE IF PRESENT OVER THE ROADWAY WHEN IN THE LOWERED POSITION TO THE STOP BAR OR CROSSWALK, WHICH EVER IS CLOSEST, ROUNDED DOWN TO NEAREST 5 FEET. WHERE THERE IS NO STOP LINE, MEASURE TO POINT WHERE DRIVER HAS A VIEW OF APPROACHING TRAFFIC.

5. THE CLEARANCE SIGN IS ALSO TO BE USED AS AN INTERIM MEASURE AT LOCATIONS WITH INTERCONNECTED INTERSECTION TRAFFIC SIGNALS WHERE IT IS PLANNED TO CHANGE THEM TO NEAR-SIDE SIGNALS AT A FUTURE TIME. IN THIS CASE, THE DISTANCE TO BE SHOWN ON THE SIGN IS MEASURED FROM THE EDGE OF THE STRIPED-OUT AREA INSTEAD OF 6 FEET FROM THE RAIL. THE SIGN IS TO BE REMOVED WHEN THE NEAR-SIDE SIGNALS ARE INSTALLED AND THE PAVEMENT MARKINGS EXTENDED TO THE INTERSECTION.

ALTERNATE SIGNS

NOTES

THE TRAVERSE SPREAD OF THE "X" MAY VARY ACCORDING TO LANE WIDTH.

ON MULTI-LANE ROADS, THE STOP LINES SHALL EXTEND ACROSS ALL APPROACH LANES AND SEPARATE RXR SYMBOLS SHALL BE PLACED ADJACENT TO EACH OTHER IN EACH LANE.

WHEN THE PAVEMENT MARKING SYMBOL IS USED, A PORTION OF THE SYMBOL SHOULD BE LOCATED DIRECTLY ADJACENT TO THE ADVANCE WARNING SIGN (W10-1) AS PLACED BY TABLE II-1, CONDITION B OF THE MUTCD.

Note: All dimensions are in INCHES (millimeters) unless otherwise shown.

= SPECIALTY ITEM

DISTRICT 5 DETAIL NO. 7800AAAA

F.A.I. RTE.	SECTION	COUNTY	TOTAL SHEETS	SHEET NO.
57	(10-30)BR	CHAMPAIGN	65	56
		CONTRACT NO. 70908		
		ILLINOIS FED. AID PROJECT		

Kaskaskia Engineering Group, LLC
PROFESSIONAL REGISTRATIONS: Illinois Professional Design Firm 184-001773; Professional Engineering Group 20-3088586

USER NAME = hpapproth	DESIGNED -	REVISED -	STATE OF ILLINOIS DEPARTMENT OF TRANSPORTATION
	DRAWN -	REVISED -	DISTRICT 5 STANDARD DETAILS
PLOT SCALE = 0.16666633 ' / in.	CHECKED -	REVISED -	
PLOT DATE = 3/22/2023	DATE -	REVISED -	SCALE: SHEET 2 OF 3 SHEETS STA. TO STA. ____

MODEL: 7800AAAA - 4
FILE NAME: P:\20-105\01 Phase II IL57 under CH170_IDOT\CAD_Sheets\D579908-sh1-IDOTSI6.dgn

DESIGN SPEED GREATER THAN 45 MPH (70 km/h) – 64′ (19.5 m) MEDIAN

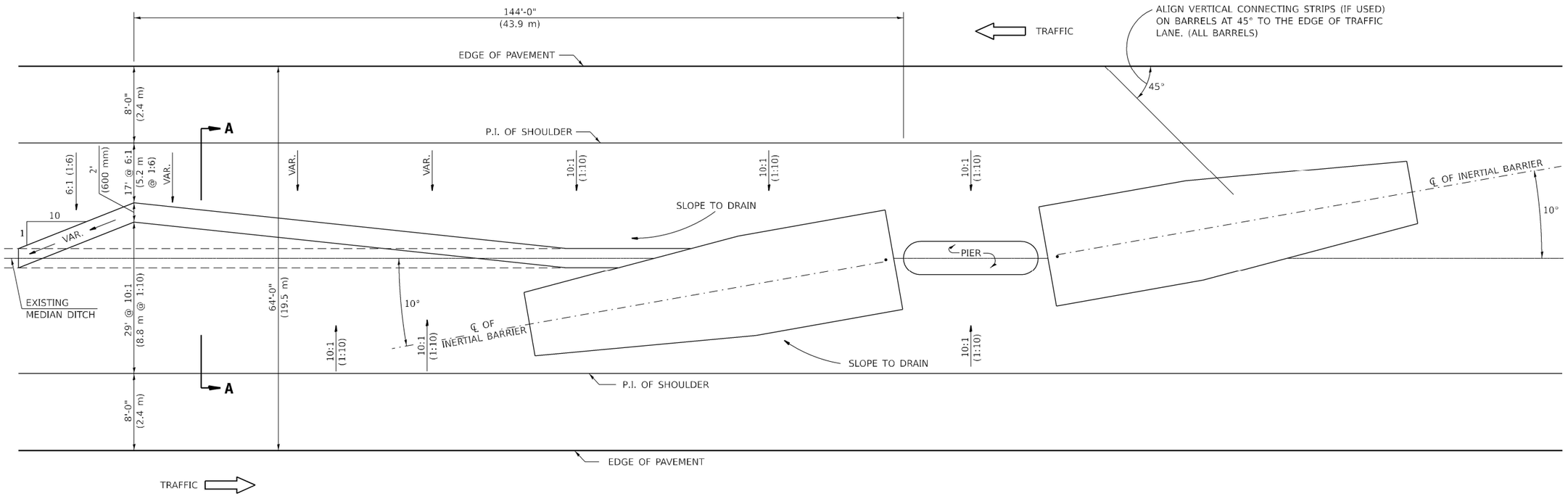

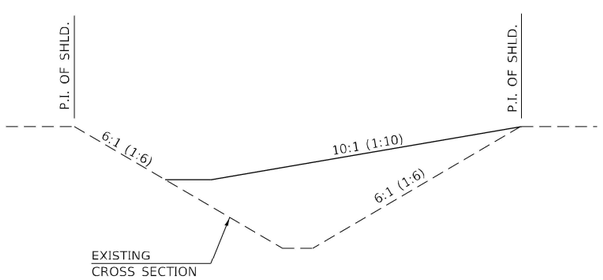

SECTION A–A
GRADING AND SHAPING DETAIL

GENERAL NOTES

1. ALL 10:1 (1:10) SLOPES SHOWN ON THIS DETAIL SHALL BE CONSTRUCTED 10:1 (1:10) OR FLATTER.
2. THE SLOPES AS SHOWN ON THIS DETAIL SHALL APPLY TO BOTH ENDS OF THE BRIDGE PIERS.
3. IN AREAS OF 10:1 (1:10) SLOPES PRECEDING THE ATTENUATOR IN THE MEDIAN INSTALLATION, FOUR OR MORE WOOD POSTS SHALL BE PLACED AT 5' (1.5 m) INTERVALS IN THE MEDIAN ℄. SEE SPECIAL PROVISIONS AND SCHEDULES.
4. SEE STANDARD 643001 FOR BASE DIMENSIONS AND SAND MODULE IMPACT ATTENUATOR ARRAY.

Note: All dimensions are in INCHES (millimeters) unless otherwise shown.

DISTRICT 5 DETAIL NO. Z0030150C

MODEL: Z0030150C
FILE NAME: P:\jb-1059.01 Phase II IL57 under CH17\0_IDOT\CAD_Sheets\D570908-sht\HDOTSts.dgn

Kaskaskia Engineering Group, LLC
PROFESSIONAL REGISTRATIONS: Illinois Professional Design Firm 184-000775; Professional Engineering Group 20-1040006

USER NAME = hpapproth	DESIGNED -	REVISED -	STATE OF ILLINOIS DEPARTMENT OF TRANSPORTATION
	DRAWN -	REVISED -	
PLOT SCALE = 0.16666633 ' / in.	CHECKED -	REVISED -	
PLOT DATE = 3/22/2023	DATE -	REVISED -	

DISTRICT 5 STANDARD DETAILS

SCALE: | SHEET 3 OF 3 SHEETS | STA. | TO STA. ____

F.A.I. RTE.	SECTION	COUNTY	TOTAL SHEETS	SHEET NO.
57	(10-30)BR	CHAMPAIGN	65	57
		CONTRACT NO. 70908		
	ILLINOIS	FED. AID PROJECT		

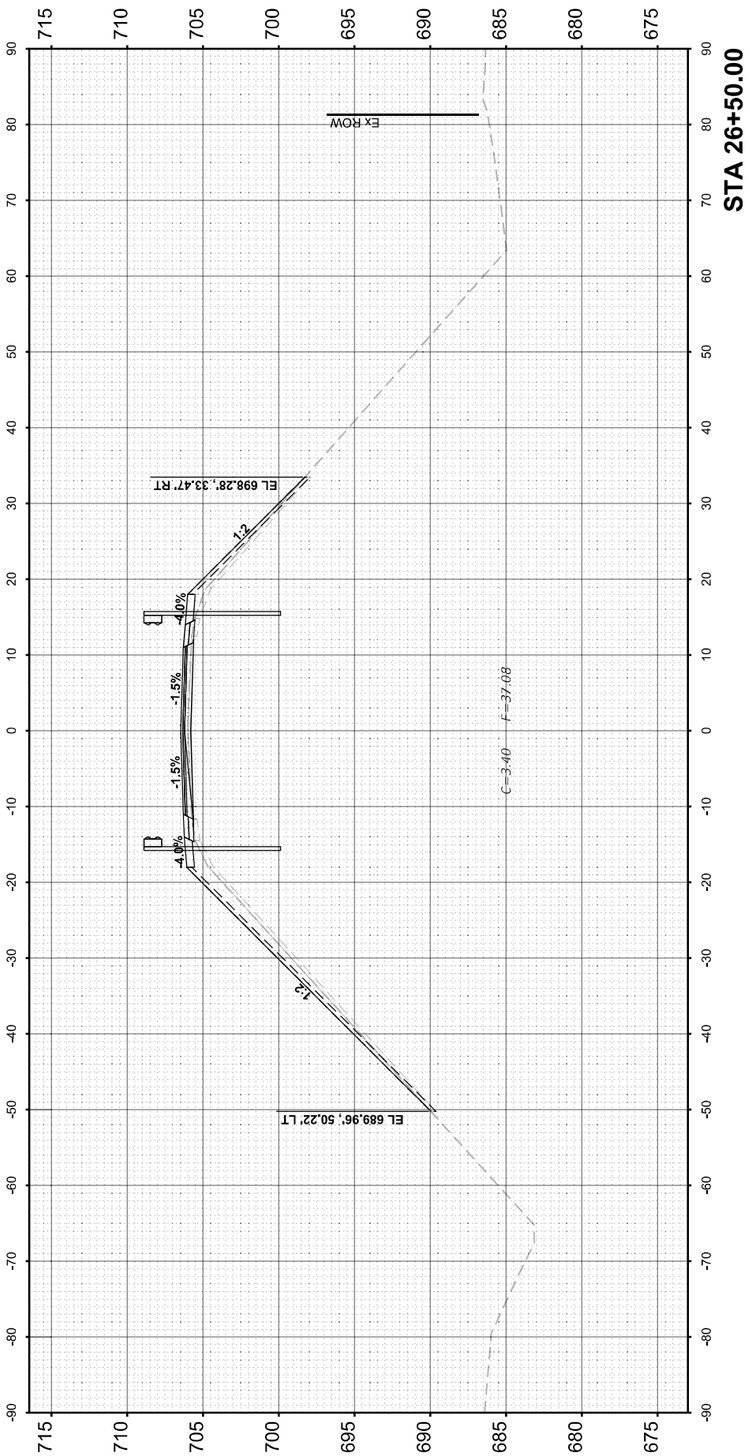

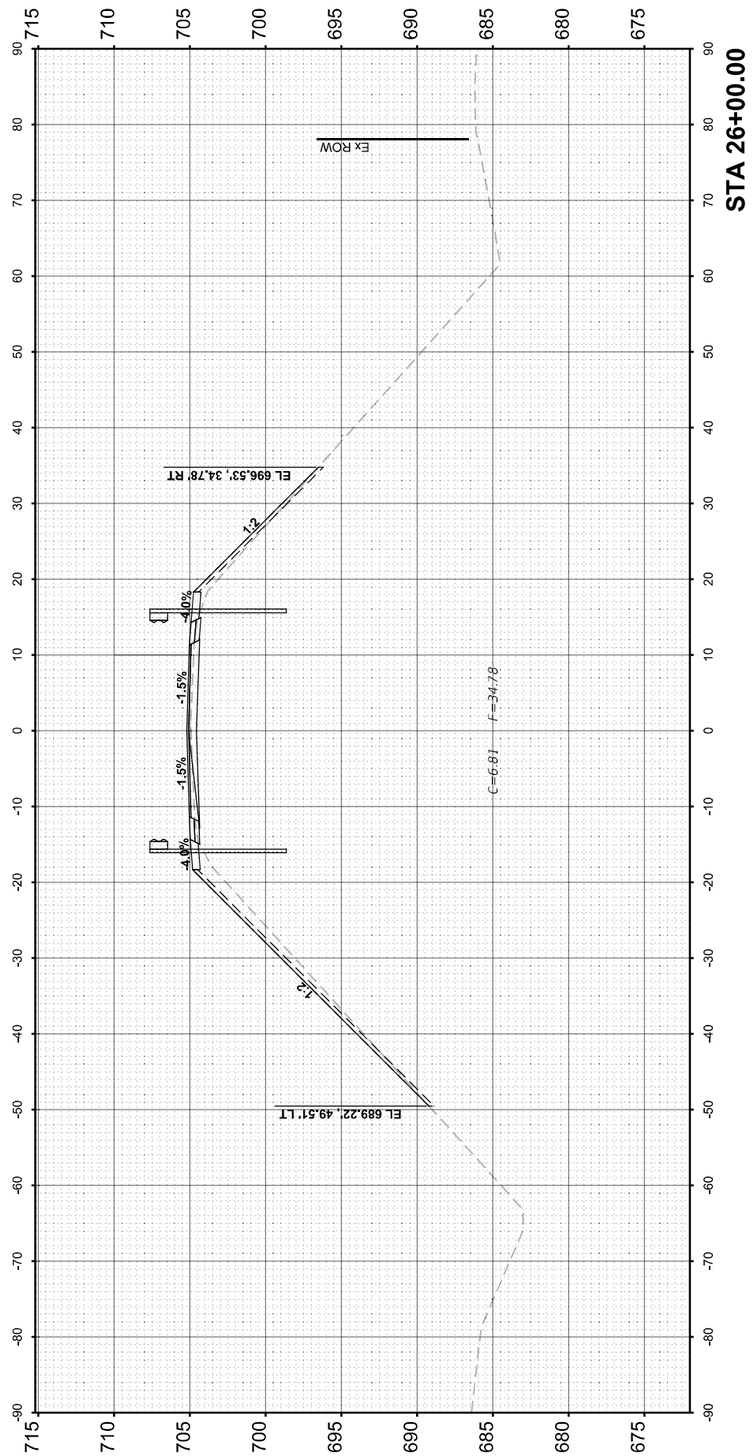

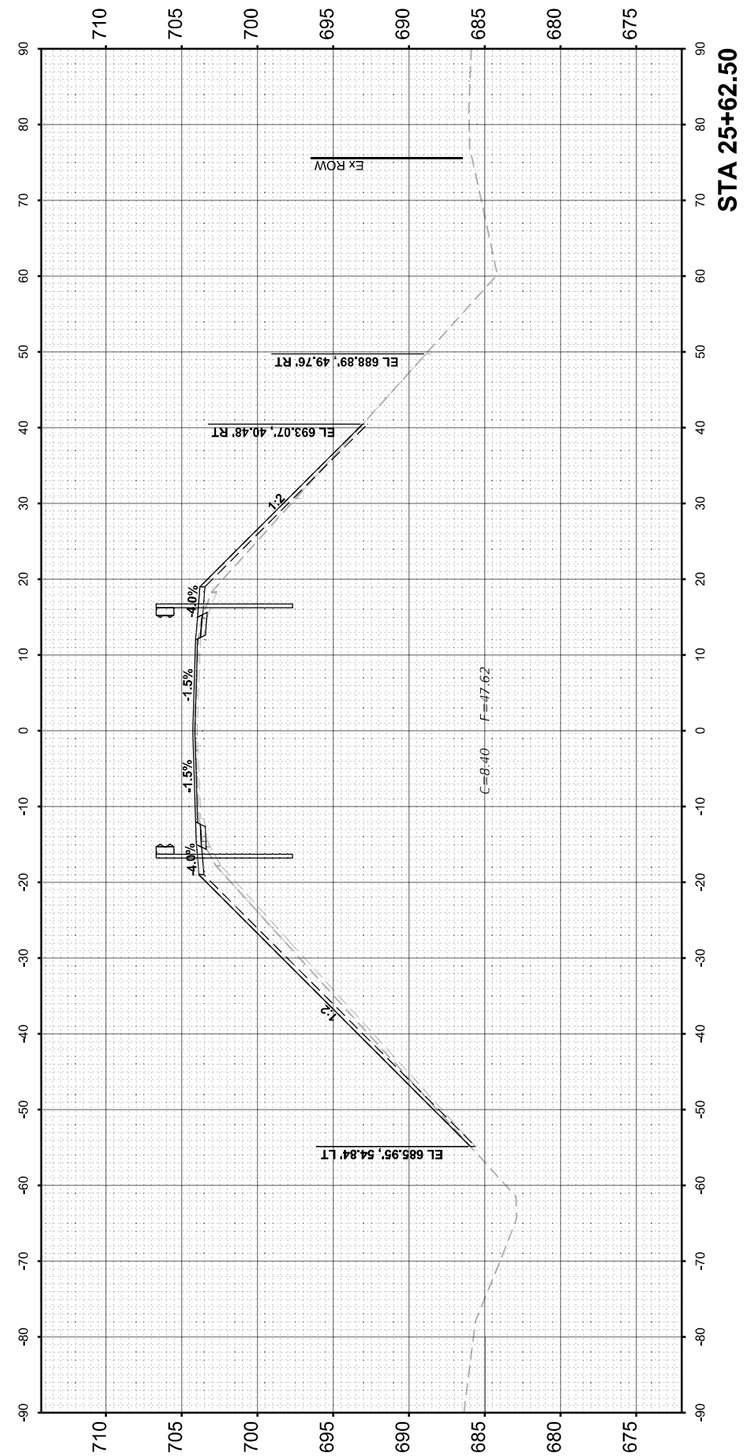

FINAL SURVEY		BY	DATE
NOTE BOOK NO.	SURVEYED		
	PLOTTED		
	TEMPLATE		
	AREAS		
	AREAS CHECKED		

ORIGINAL SURVEY		BY	DATE
NOTE BOOK NO.	SURVEYED		
	PLOTTED		
	TEMPLATE		
	AREAS		
	AREAS CHECKED		

MODEL: XSection_Final - 01
FILE NAME: T:\TRG\Business\Clients\IDOT\Projects\20-040 PTB 195-041 I-57 Bridge\400 CADD\CAD_Sheets\D570908-sht-xSections.dgn

Ardmore Roderick

USER NAME = MatthewToussaint	DESIGNED - MRT	REVISED -	
	DRAWN - MRT	REVISED -	
PLOT SCALE = 0.16666633 ' / in.	CHECKED - CJD	REVISED -	
PLOT DATE = 3/22/2023	DATE - 03/20/2023	REVISED -	

STATE OF ILLINOIS
DEPARTMENT OF TRANSPORTATION

CROSS SECTIONS
CH-17

SCALE: 1" = 10' | SHEET 1 OF 8 SHEETS | STA. 25+62.50 TO STA. 26+50.00

F.A.I. RTE.	SECTION	COUNTY	TOTAL SHEETS	SHEET NO.
57	(10-31HB)BR	CHAMPAIGN	65	58
	SN 010-0295	CONTRACT NO. 70908		
FED. ROAD DIST. NO. 5	ILLINOIS	FED. AID PROJECT		

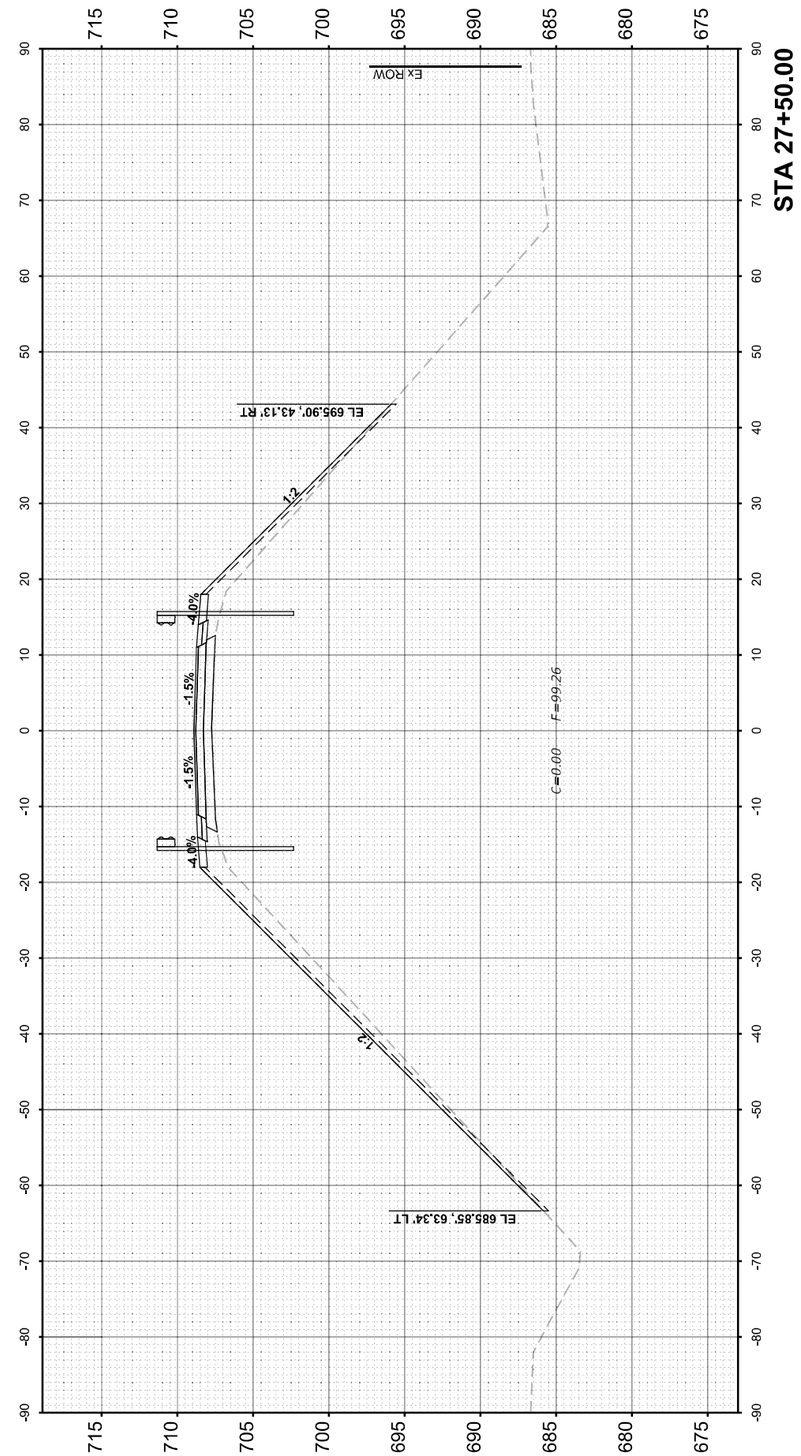

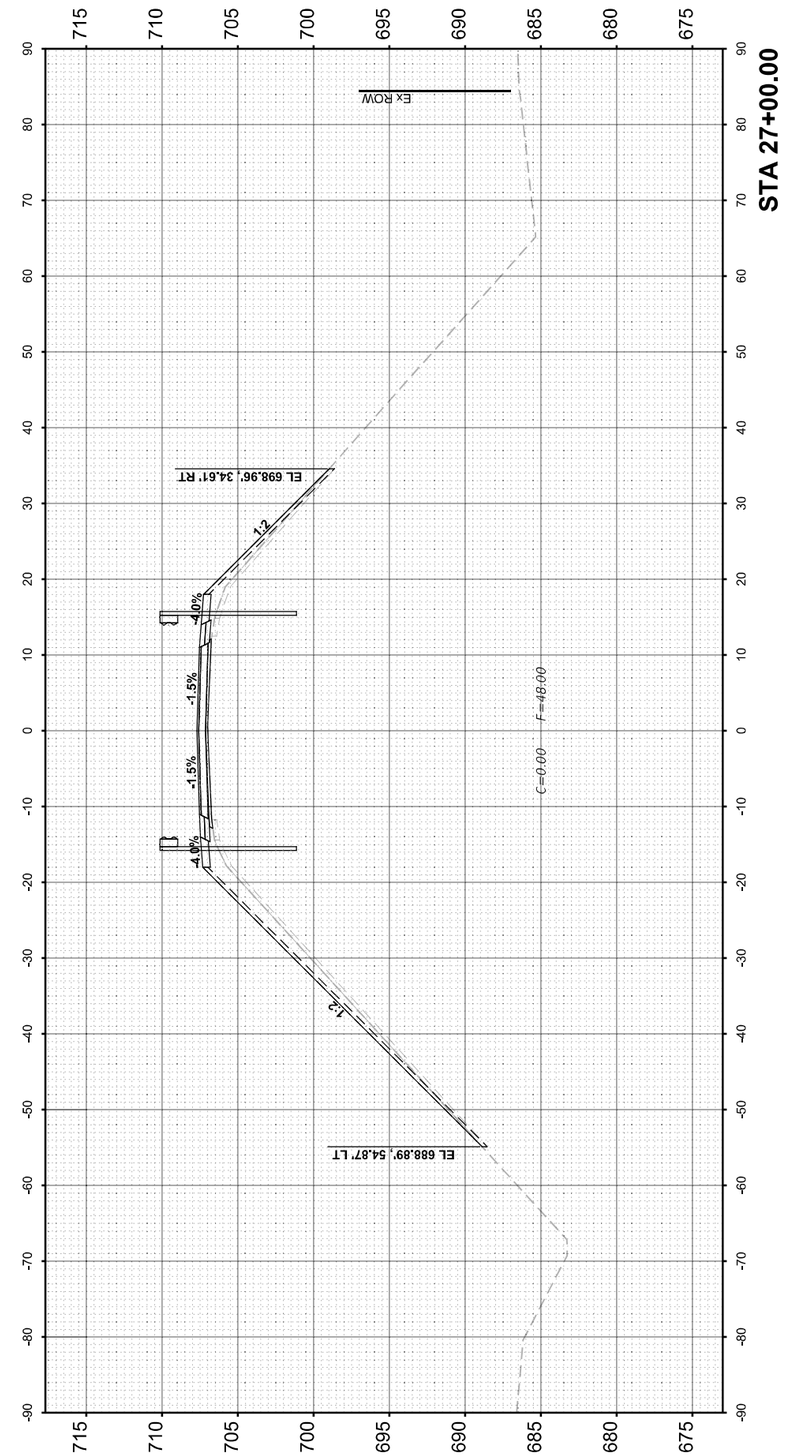

FINAL SURVEY		BY	DATE
NOTE BOOK NO.	SURVEYED		
	PLOTTED		
	TEMPLATE		
	AREAS		
	AREAS CHECKED		

ORIGINAL SURVEY		BY	DATE
NOTE BOOK NO.	SURVEYED		
	PLOTTED		
	TEMPLATE		
	AREAS		
	AREAS CHECKED		

MODEL: XSection_Final - 02
FILE NAME: T:\TRG\Business\Clients\IDOT\Projects\320-040 PTB 195-041 I-57 Bridge\400 CADD\CAD_Sheets\D570908-sht-xSections.dgn

Ardmore Roderick

USER NAME = MatthewToussaint	DESIGNED - MRT	REVISED -	
	DRAWN - MRT	REVISED -	
PLOT SCALE = 0.16666633 ' / in.	CHECKED - CJD	REVISED -	
PLOT DATE = 3/22/2023	DATE - 03/20/2023	REVISED -	

STATE OF ILLINOIS
DEPARTMENT OF TRANSPORTATION

CROSS SECTIONS
CH-17

SCALE: 1" = 10' | SHEET 2 OF 8 SHEETS | STA. 27+00.00 TO STA. 27+50.00

F.A.I. RTE.	SECTION	COUNTY	TOTAL SHEETS	SHEET NO.
57	(10-31HB)BR	CHAMPAIGN	65	59
	SN 010-0295	CONTRACT NO. 70908		
FED. ROAD DIST. NO. 5	ILLINOIS	FED. AID PROJECT		

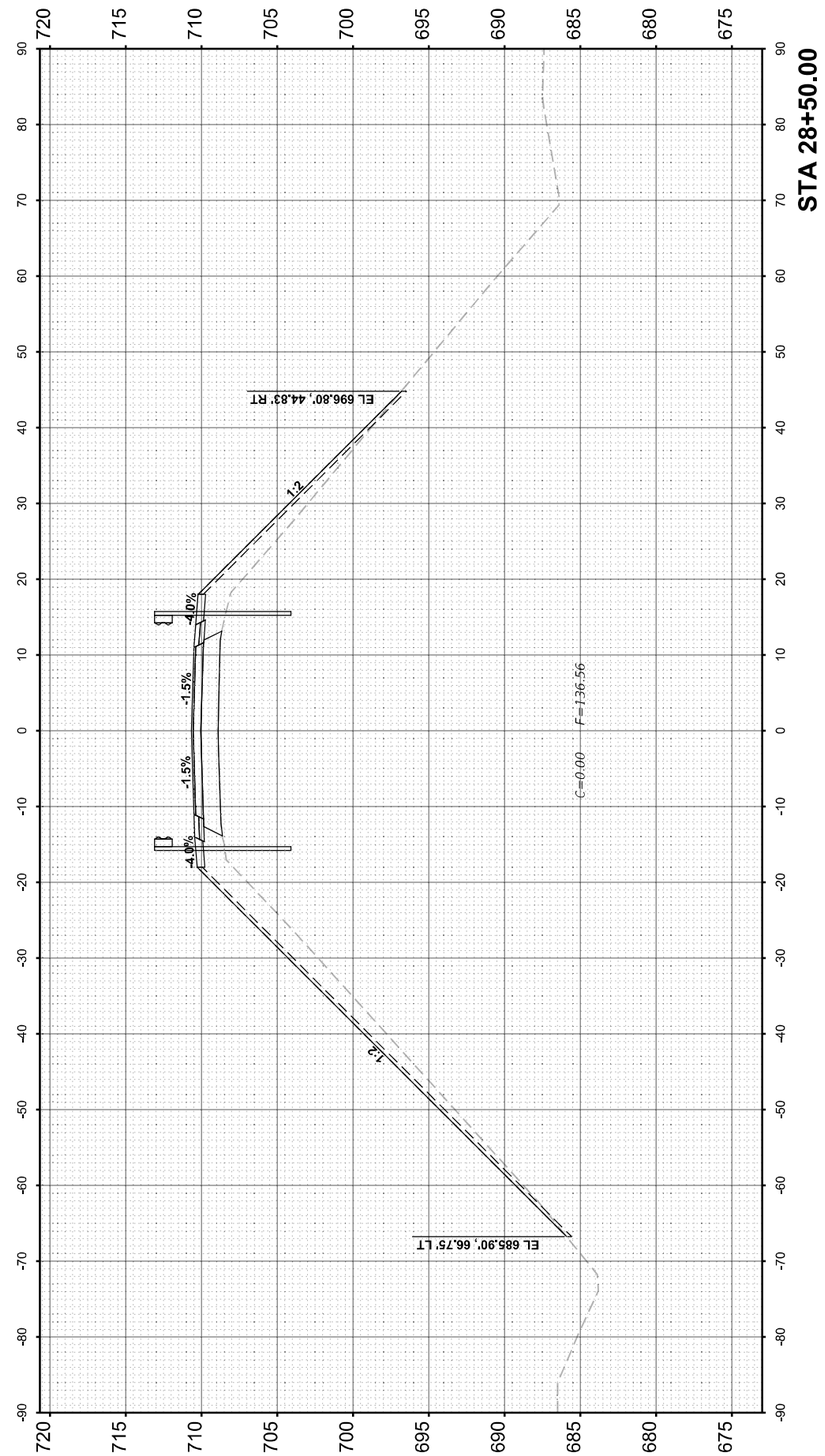

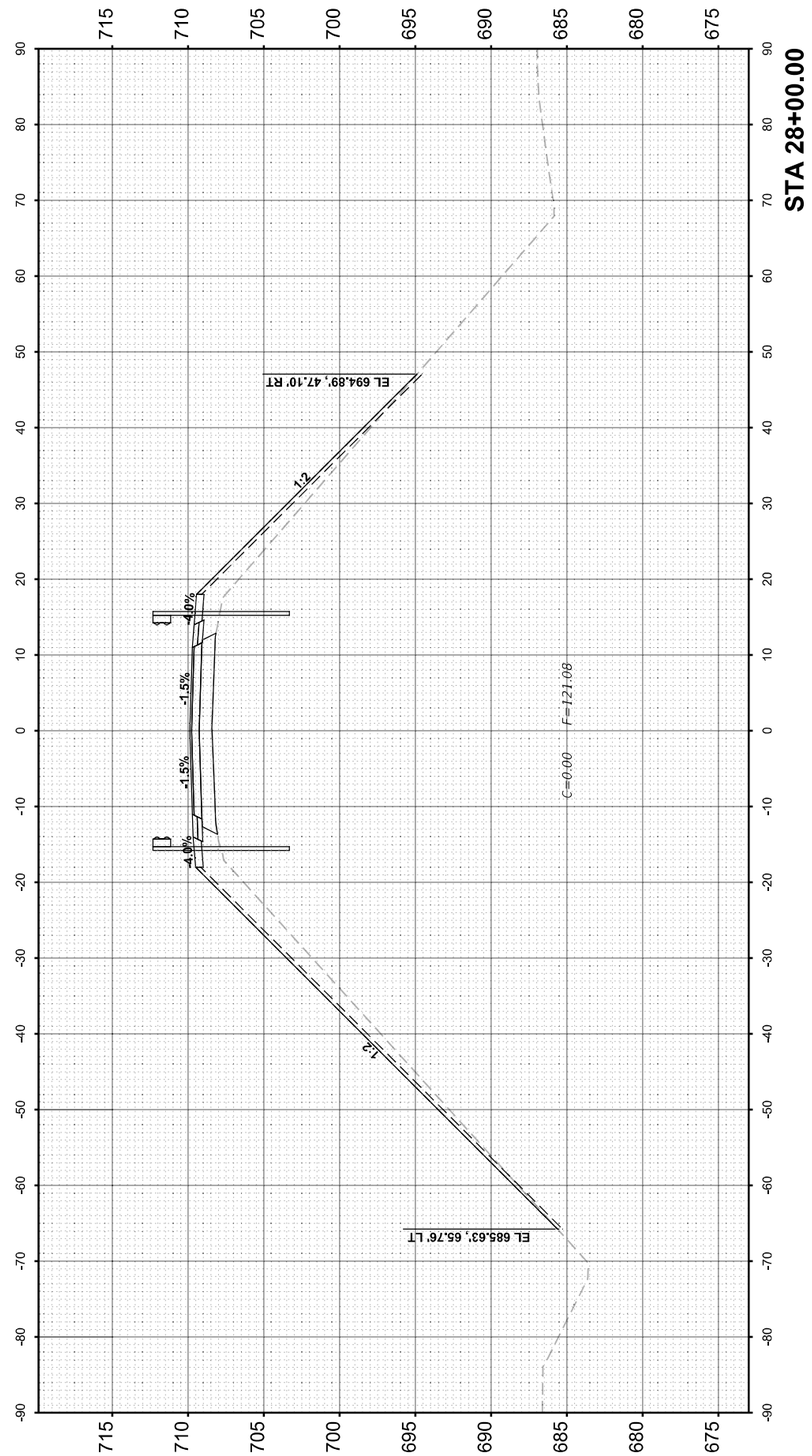

FINAL SURVEY		BY	DATE
NOTE BOOK NO.	SURVEYED		
	PLOTTED		
	TEMPLATE		
	AREAS		
	AREAS CHECKED		

ORIGINAL SURVEY		BY	DATE
NOTE BOOK NO.	SURVEYED		
	PLOTTED		
	TEMPLATE		
	AREAS		
	AREAS CHECKED		

MODEL: XSection_Final - 03
FILE NAME: T:\IRG\Business\Clients\IDOT\Projects\20-040 PTB 195-041 I-57 Bridge\400 CADD\CAD_Sheets\D570908-sht-xSections.dgn

Ardmore Roderick

USER NAME = MatthewToussaint	DESIGNED - MRT	REVISED -	
	DRAWN - MRT	REVISED -	
PLOT SCALE = 0.16666633 ' / in.	CHECKED - CJD	REVISED -	
PLOT DATE = 3/22/2023	DATE - 03/20/2023	REVISED -	

STATE OF ILLINOIS
DEPARTMENT OF TRANSPORTATION

CROSS SECTIONS
CH-17

SCALE: 1" = 10' | SHEET 3 OF 8 SHEETS | STA. 28+00.00 TO STA. 28+50.00

F.A.I. RTE.	SECTION	COUNTY	TOTAL SHEETS	SHEET NO.
57	(10-31HB)BR	CHAMPAIGN	65	60
	SN 010-0295	CONTRACT NO. 70908		
FED. ROAD DIST. NO. 5	ILLINOIS	FED. AID PROJECT		

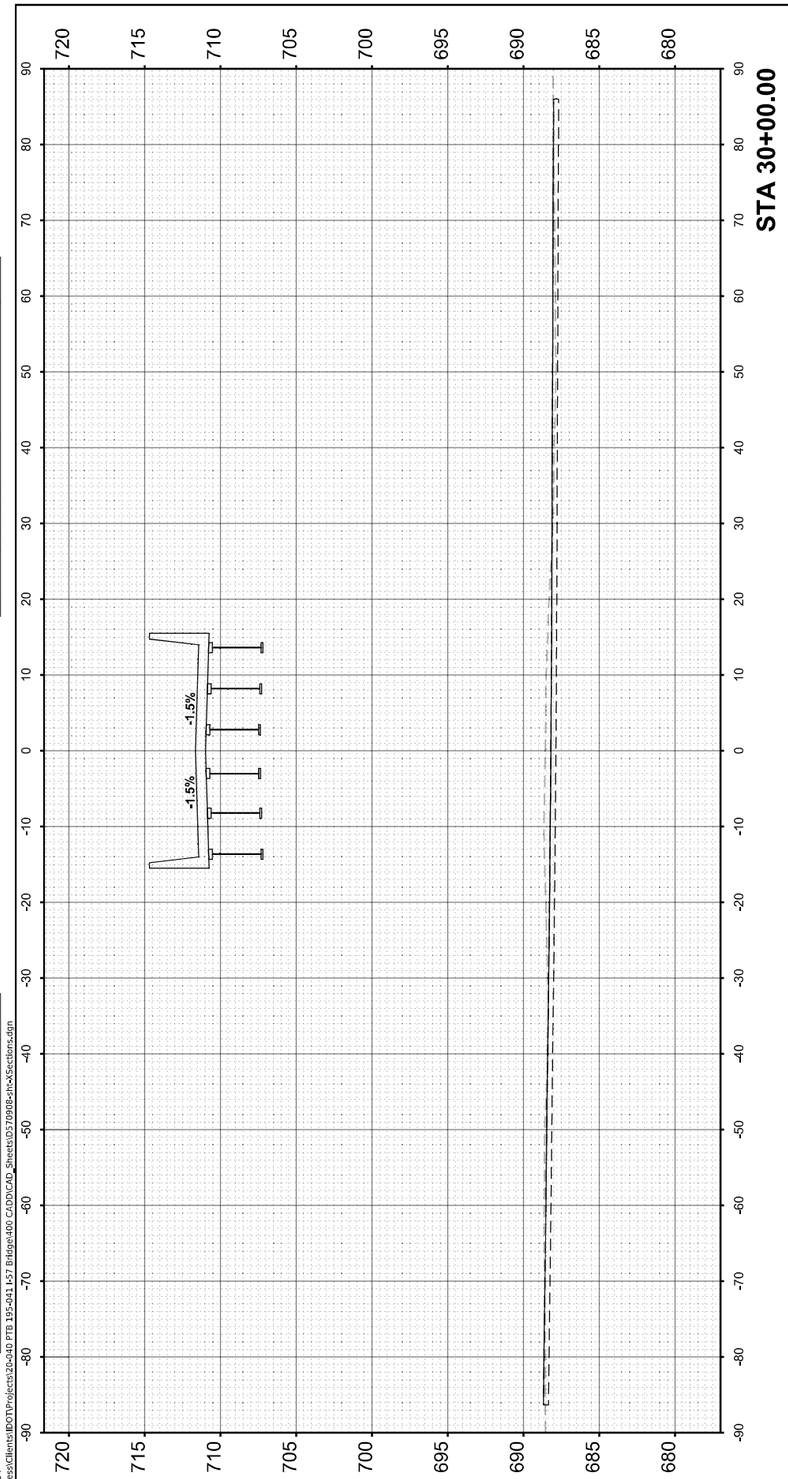

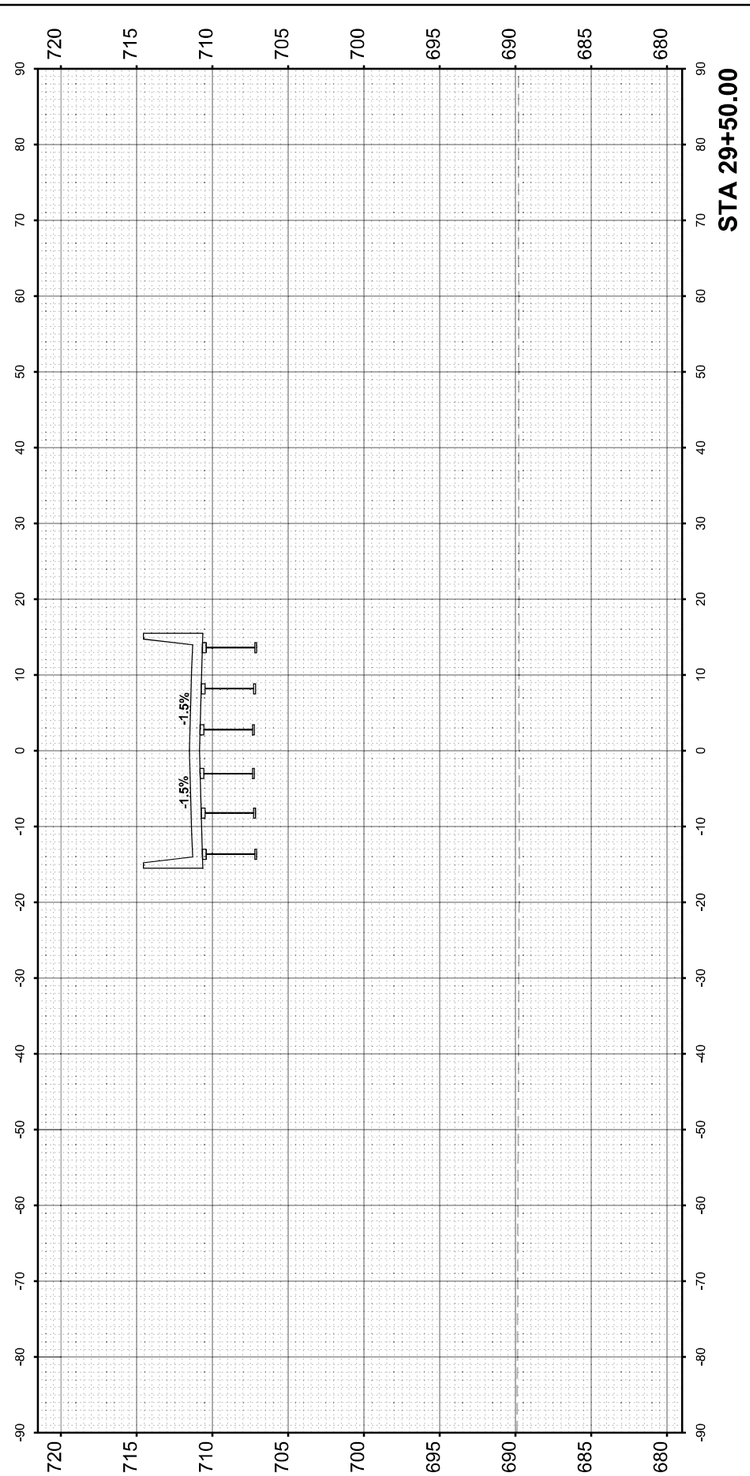

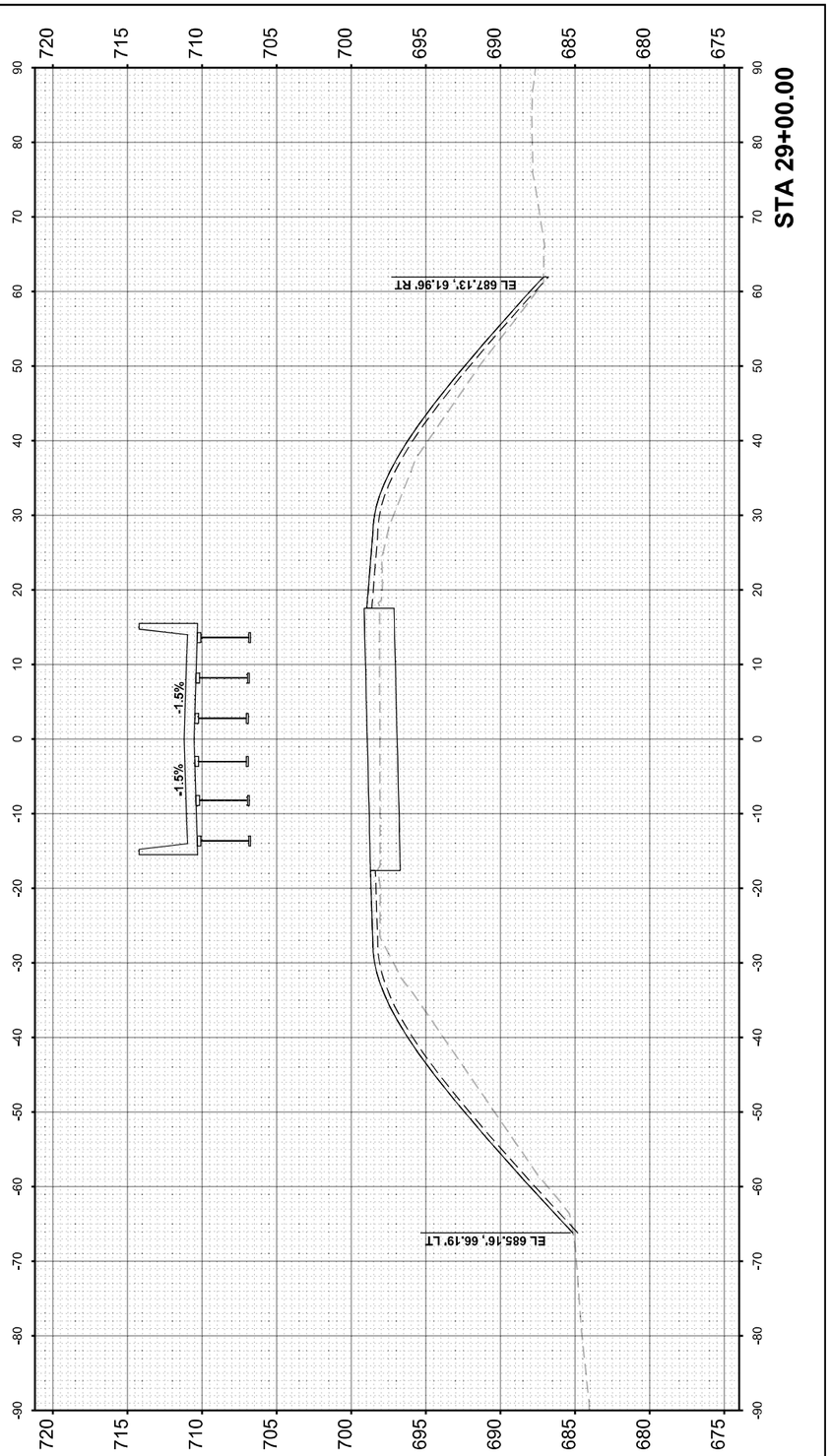

FINAL SURVEY		BY	DATE
NOTE BOOK	SURVEYED		
	PLOTTED		
	TEMPLATE		
	AREAS		
NO.	AREAS CHECKED		

ORIGINAL SURVEY		BY	DATE
NOTE BOOK	SURVEYED		
	PLOTTED		
	TEMPLATE		
	AREAS		
NO.	AREAS CHECKED		

MODEL: XSection_Final - 04
FILE NAME: T:\TRG\Business\Clients\IDOT\Projects\20-040 PTB 195-041 I-57 Bridge\400 CADD\CAD_Sheets\D370908-sht-xSections.dgn

Ardmore Roderick

USER NAME = MatthewToussaint	DESIGNED - MRT	REVISED -	
	DRAWN - MRT	REVISED -	
PLOT SCALE = 0.16666633 ' / in.	CHECKED - CJD	REVISED -	
PLOT DATE = 3/22/2023	DATE - 03/20/2023	REVISED -	

STATE OF ILLINOIS
DEPARTMENT OF TRANSPORTATION

CROSS SECTIONS
CH-17

SCALE: 1" = 10' | SHEET 4 OF 8 SHEETS | STA. 29+00.00 TO STA. 30+00.00

F.A.I. RTE.	SECTION	COUNTY	TOTAL SHEETS	SHEET NO.
57	(10-31HB)BR	CHAMPAIGN	65	61
	SN 010-0295	CONTRACT NO. 70908		
FED. ROAD DIST. NO. 5	ILLINOIS	FED. AID PROJECT		

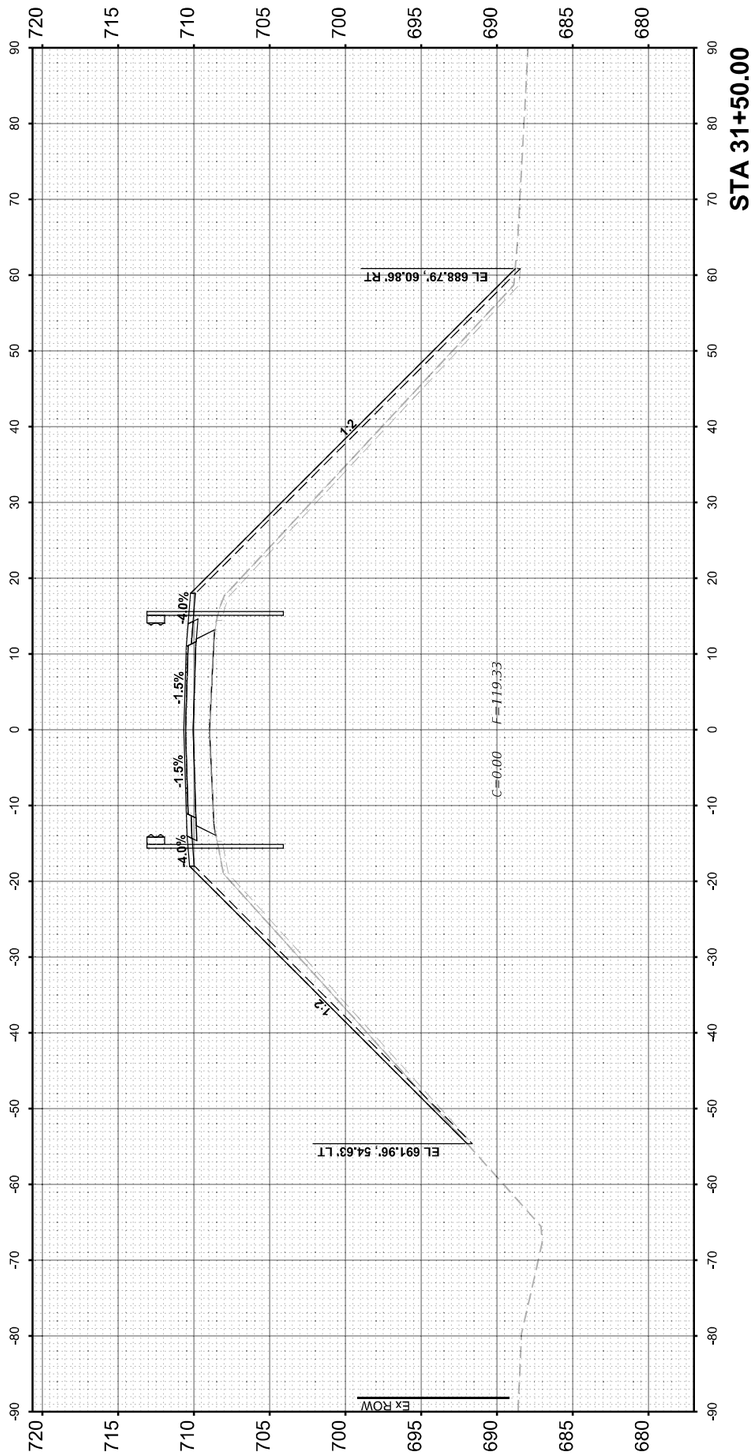

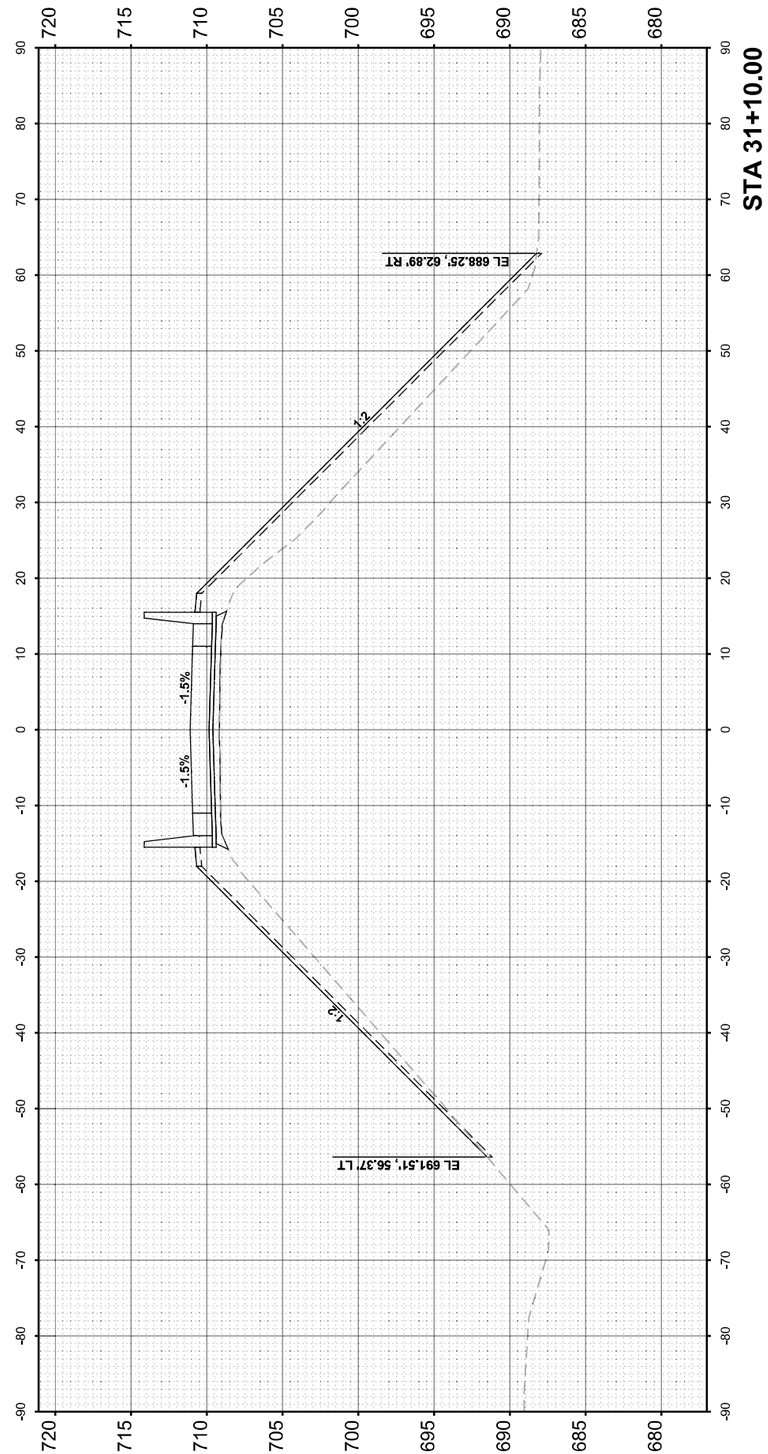

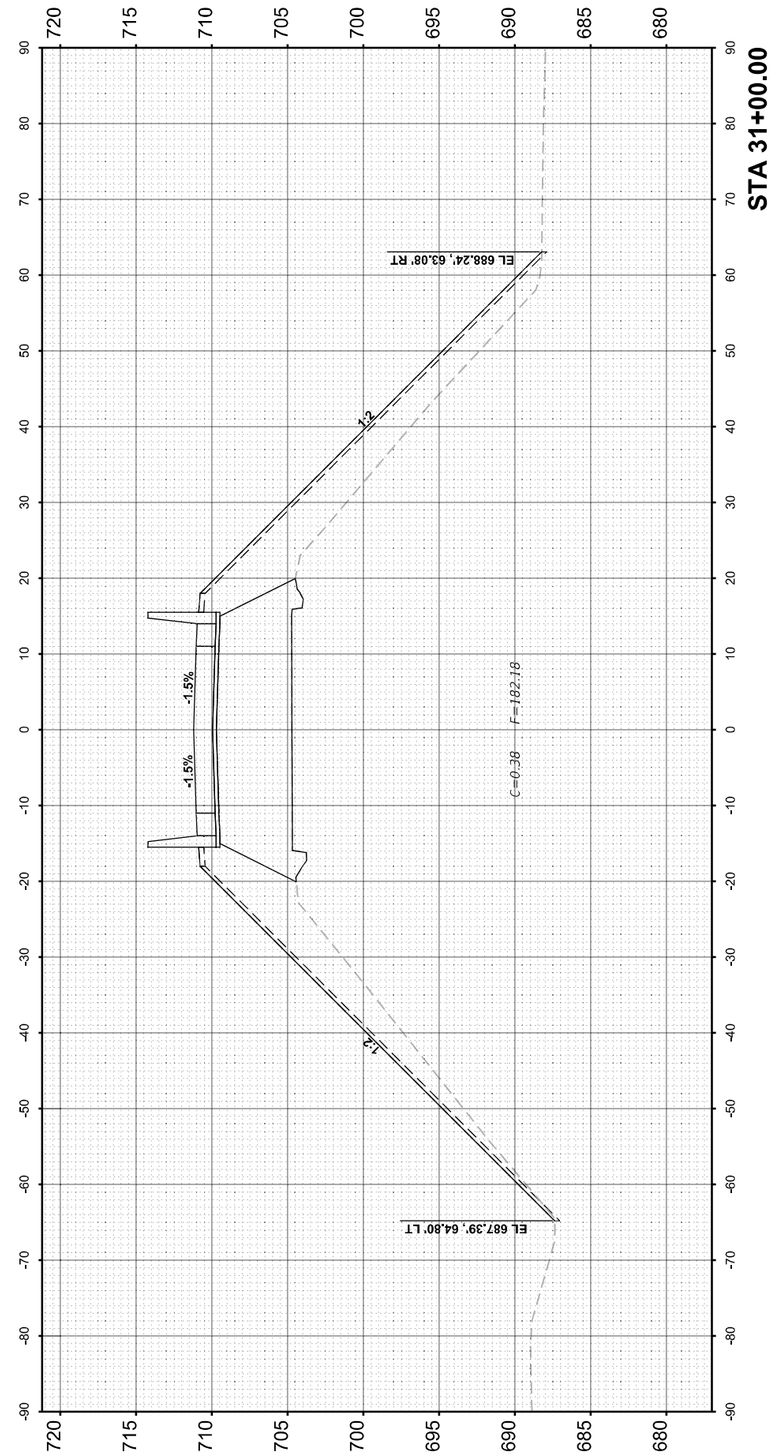

FINAL SURVEY		BY	DATE
NOTE BOOK NO.	SURVEYED		
	PLOTTED		
	TEMPLATE		
	AREAS		
	AREAS CHECKED		

ORIGINAL SURVEY		BY	DATE
NOTE BOOK NO.	SURVEYED		
	PLOTTED		
	TEMPLATE		
	AREAS		
	AREAS CHECKED		

MODEL: XSection_Final - 05
FILE NAME: T:\TRG\Business\Clients\IDOT\Projects\20-040 PTB 195-041 I-57 Bridge\400 CADD\CAD_Sheets\D370908-sht-xSections.dgn

Ardmore Roderick

USER NAME = MatthewToussaint	DESIGNED - MRT	REVISED -	
	DRAWN - MRT	REVISED -	
PLOT SCALE = 0.16666633 ' / in.	CHECKED - CJD	REVISED -	
PLOT DATE = 3/22/2023	DATE - 03/20/2023	REVISED -	

STATE OF ILLINOIS
DEPARTMENT OF TRANSPORTATION

CROSS SECTIONS
CH-17

SCALE: 1" = 10' | SHEET 5 OF 8 SHEETS | STA. 30+50.00 TO STA. 31+50.00

F.A.I. RTE.	SECTION	COUNTY	TOTAL SHEETS	SHEET NO.
57	(10-31HB)BR	CHAMPAIGN	65	62
	SN 010-0295	CONTRACT NO. 70908		
FED. ROAD DIST. NO. 5	ILLINOIS	FED. AID PROJECT		

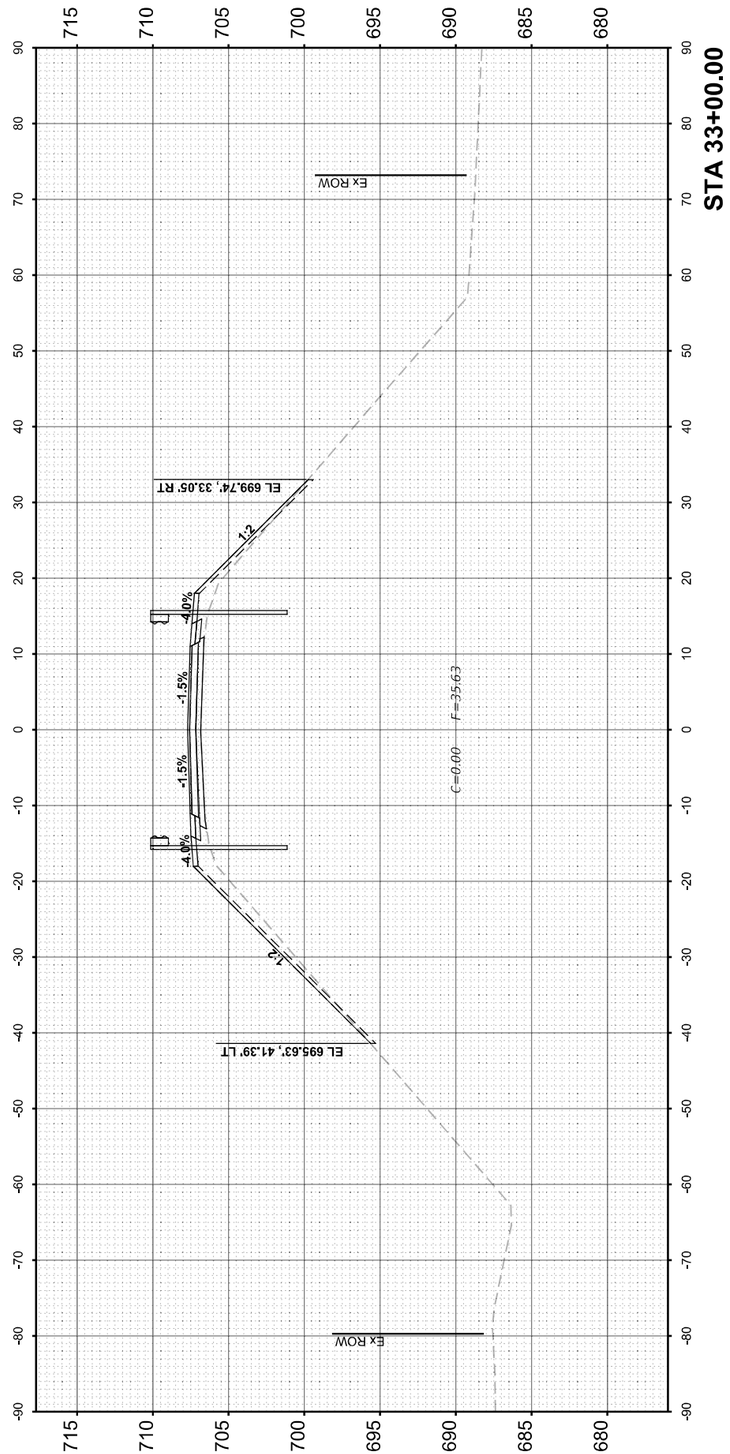

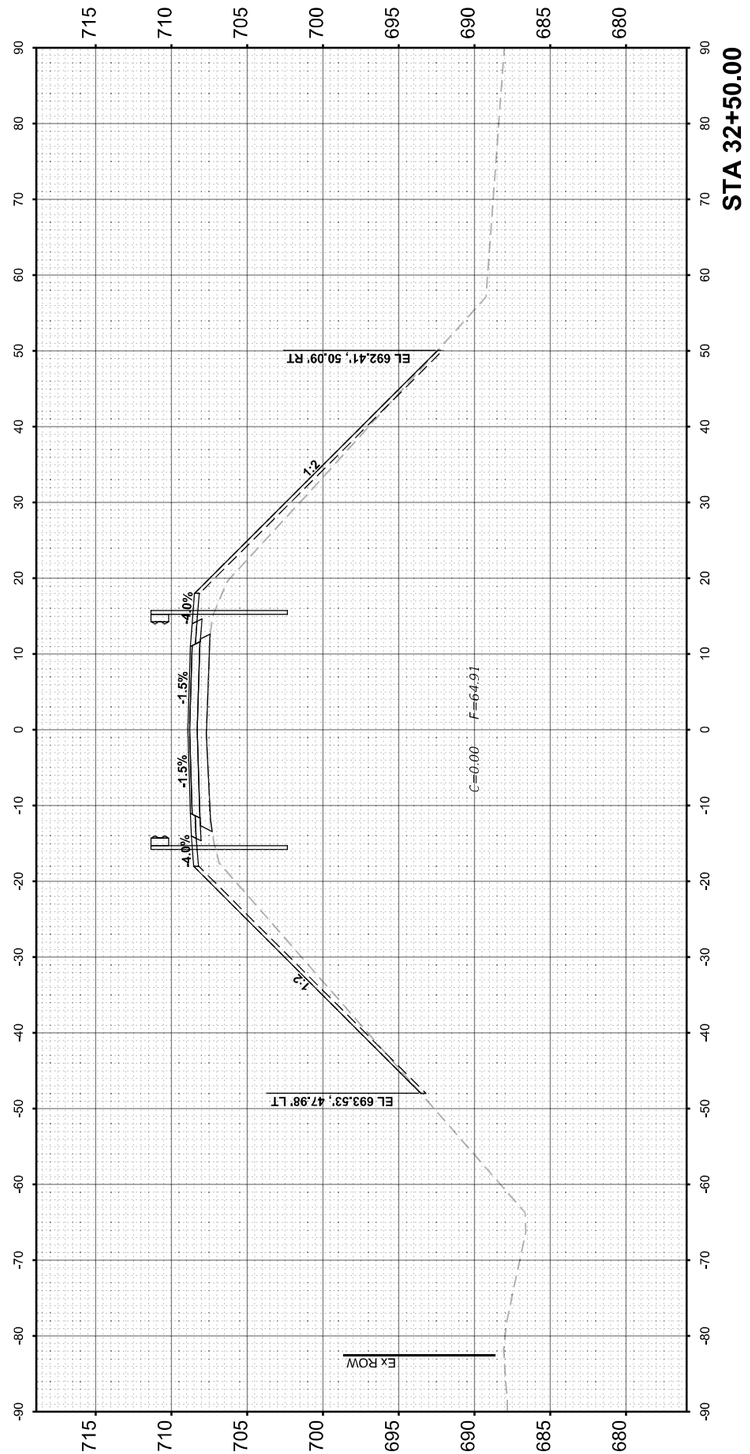

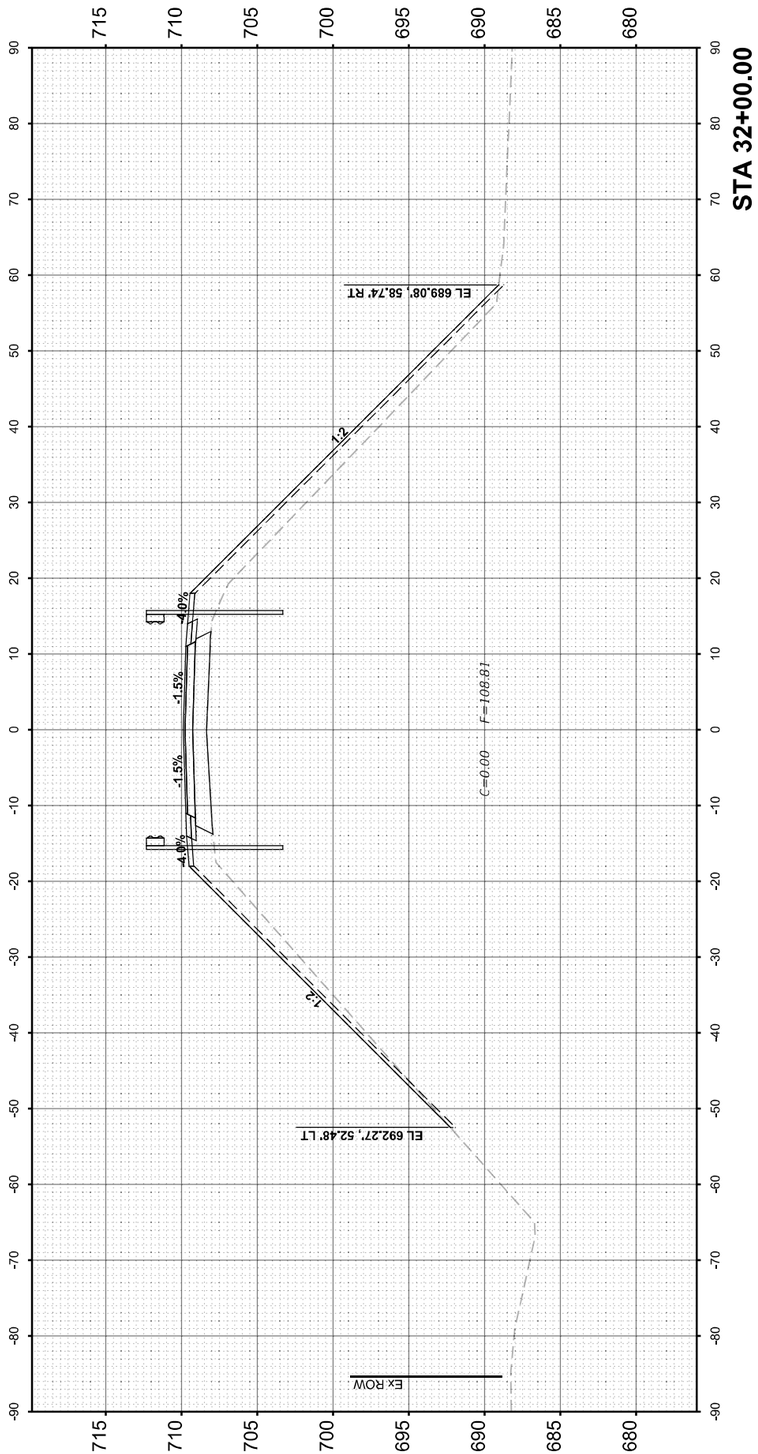

FINAL SURVEY		BY	DATE
NOTE BOOK NO.	SURVEYED		
	PLOTTED		
	TEMPLATE		
	AREAS		
	AREAS CHECKED		

ORIGINAL SURVEY		BY	DATE
NOTE BOOK NO.	SURVEYED		
	PLOTTED		
	TEMPLATE		
	AREAS		
	AREAS CHECKED		

MODEL: XSection_Final - 06
FILE NAME: T:\ITRG\Business\Clients\IDOT\Projects\20-040 PTB 195-041 I-57 Bridge\400 CADD\CAD_Sheets\D370908-sht-xSections.dgn

Ardmore Roderick

USER NAME = MatthewToussaint	DESIGNED - MRT	REVISED -	
	DRAWN - MRT	REVISED -	
PLOT SCALE = 0.16666633 ' / in.	CHECKED - CJD	REVISED -	
PLOT DATE = 3/22/2023	DATE - 03/20/2023	REVISED -	

STATE OF ILLINOIS
DEPARTMENT OF TRANSPORTATION

CROSS SECTIONS
CH-17

SCALE: 1" = 10' | SHEET 6 OF 8 SHEETS | STA. 32+00.00 TO STA. 33+00.00

F.A.I. RTE.	SECTION	COUNTY	TOTAL SHEETS	SHEET NO.
57	(10-31HB)BR	CHAMPAIGN	65	63
	SN 010-0295	CONTRACT NO. 70908		
FED. ROAD DIST. NO. 5	ILLINOIS	FED. AID PROJECT		

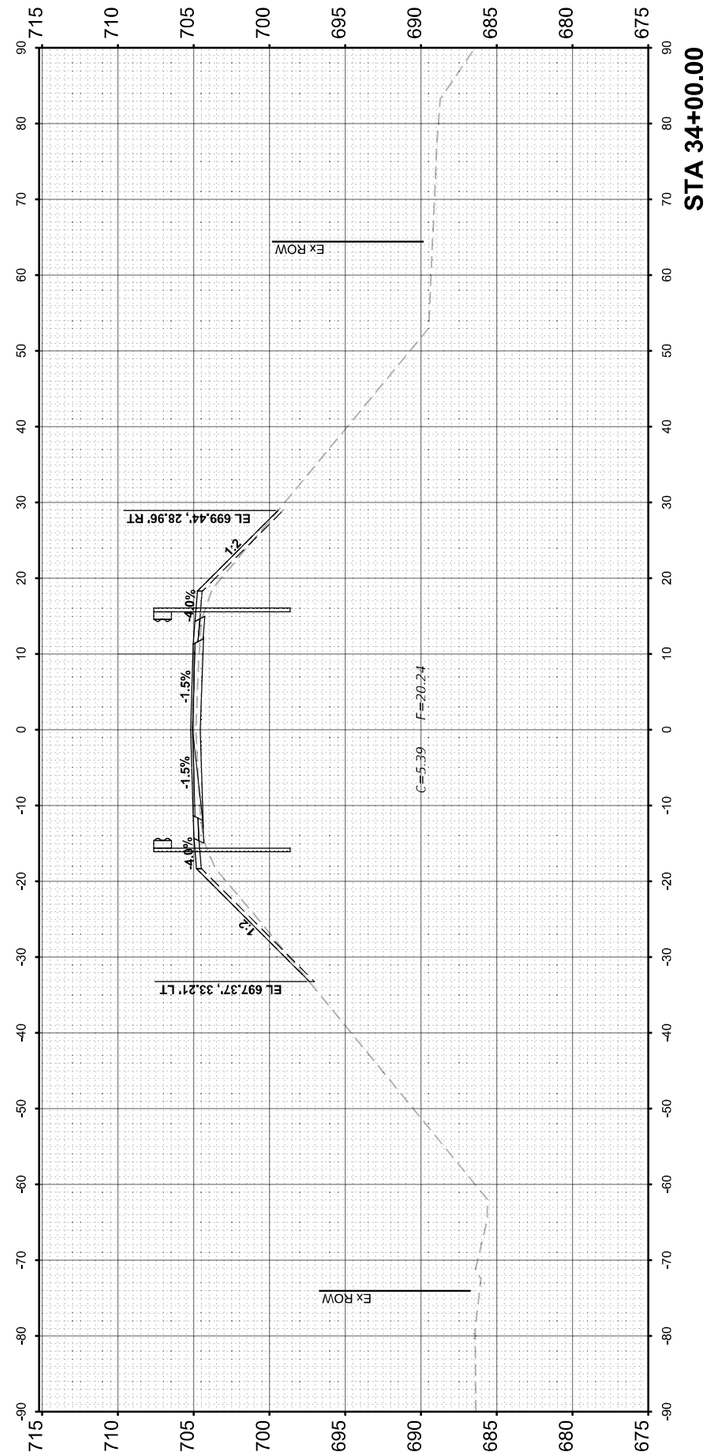

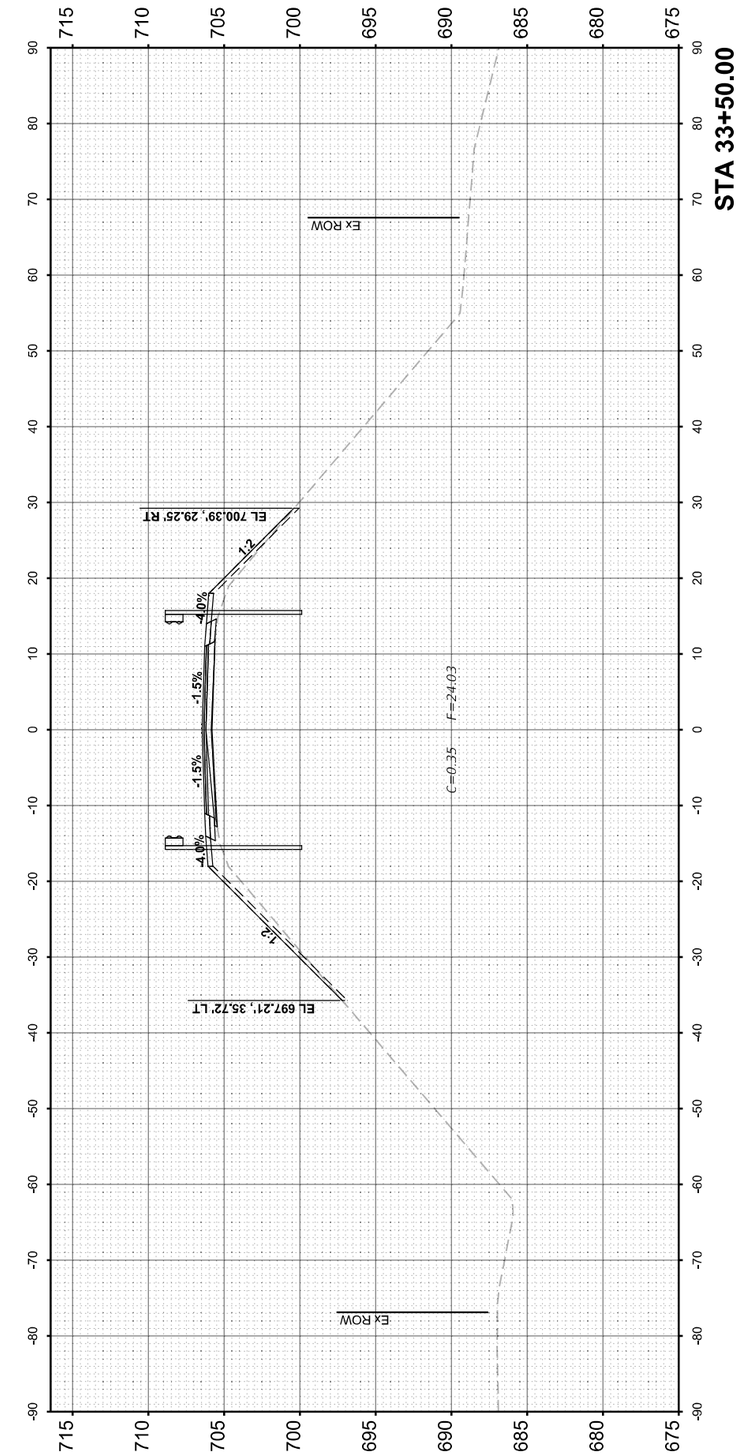

FINAL SURVEY		BY	DATE
NOTE BOOK NO.	SURVEYED		
	PLOTTED		
	TEMPLATE		
	AREAS		
	AREAS CHECKED		

ORIGINAL SURVEY		BY	DATE
NOTE BOOK NO.	SURVEYED		
	PLOTTED		
	TEMPLATE		
	AREAS		
	AREAS CHECKED		

MODEL: XSection_Final - 07
FILE NAME: T:\TRG\Business\Clients\IDOT\Projects\320-040 PTB 195-041 I-57 Bridge\400 CADD\CAD_Sheets\D570908-chrXSections.dgn

Ardmore Roderick

USER NAME = MatthewToussaint	DESIGNED - MRT	REVISED -	
	DRAWN - MRT	REVISED -	
PLOT SCALE = 0.16666633 ' / in.	CHECKED - CJD	REVISED -	
PLOT DATE = 3/22/2023	DATE - 03/20/2023	REVISED -	

STATE OF ILLINOIS
DEPARTMENT OF TRANSPORTATION

CROSS SECTIONS
CH-17

SCALE: 1" = 10' | SHEET 7 OF 8 SHEETS | STA. 33+50.00 TO STA. 34+00.00

F.A.I. RTE.	SECTION	COUNTY	TOTAL SHEETS	SHEET NO.
57	(10-31HB)BR	CHAMPAIGN	65	64
	SN 010-0295	CONTRACT NO. 70908		
FED. ROAD DIST. NO. 5	ILLINOIS	FED. AID PROJECT		

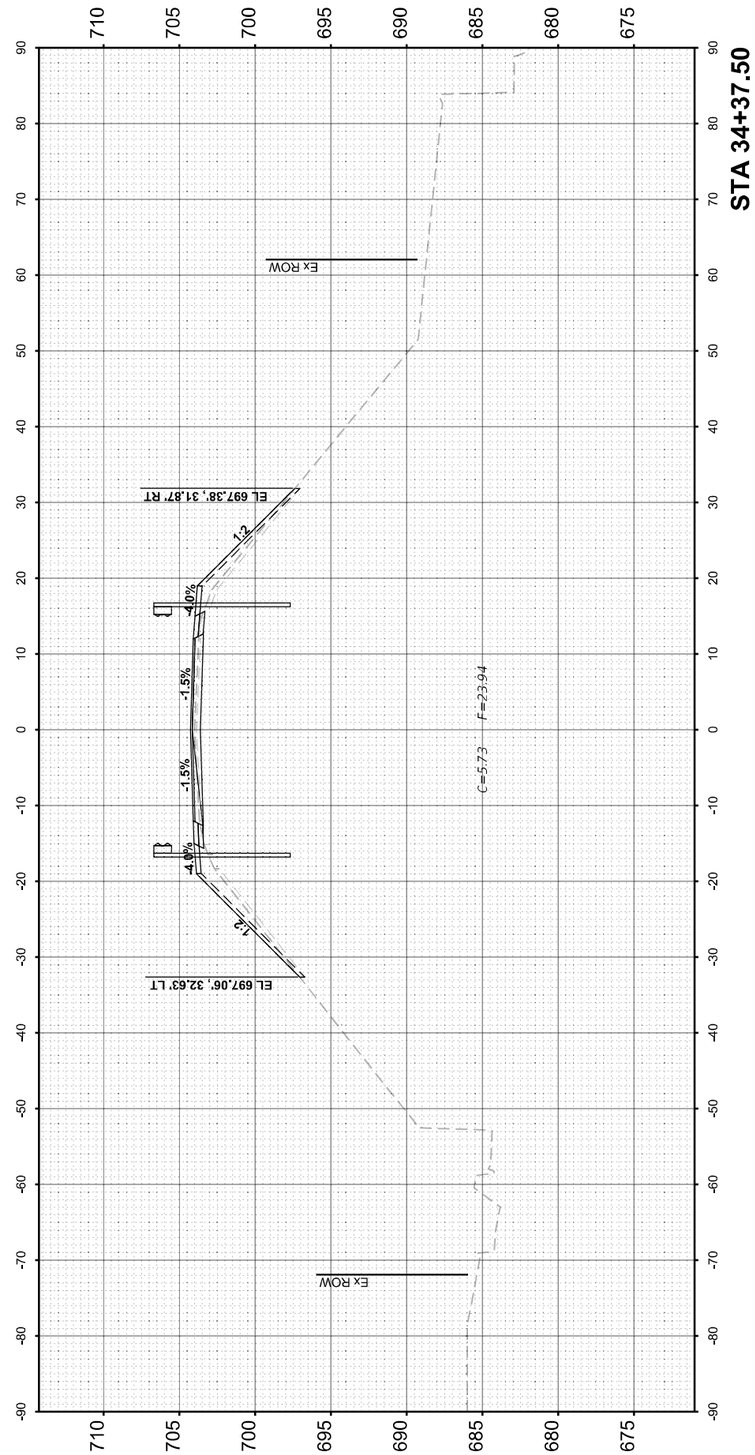

FINAL SURVEY		BY	DATE
NOTE BOOK NO.	SURVEYED		
	PLOTTED		
	TEMPLATE		
	AREAS		
	AREAS CHECKED		

ORIGINAL SURVEY		BY	DATE
NOTE BOOK NO.	SURVEYED		
	PLOTTED		
	TEMPLATE		
	AREAS		
	AREAS CHECKED		

MODEL: XSection_Final - 08
FILE NAME: T:\TRG\Business\Clients\IDOT\Projects\20-040 PTB 195-041 I-57 Bridge\400 CADD\CAD_Sheets\D270908-sht-xSections.dgn

USER NAME = MatthewToussaint	DESIGNED - MRT	REVISED -	
	DRAWN - MRT	REVISED -	
PLOT SCALE = 0.16666633 ' / in.	CHECKED - CJD	REVISED -	
PLOT DATE = 3/22/2023	DATE - 03/20/2023	REVISED -	

STATE OF ILLINOIS
DEPARTMENT OF TRANSPORTATION

CROSS SECTIONS
CH-17

SCALE: 1" = 10' | SHEET 8 OF 8 SHEETS | STA. 34+37.50

F.A.I. RTE.	SECTION	COUNTY	TOTAL SHEETS	SHEET NO.
57	(10-31HB)BR	CHAMPAIGN	65	65
	SN 010-0295	CONTRACT NO. 70908		
FED. ROAD DIST. NO. 5	ILLINOIS	FED. AID PROJECT		