INDEX OF SHEETS

* INCLUDING SHEET 122A

HIGHWAY STANDARDS

000001-06	STANDARD SYMBOLS, ABBREVIATIONS AND PATTERNS
001001-02	AREAS OF REINFORCEMENT BARS
001006	DECIMAL OF AN INCH AND OF A FOOT
280001-07	TEMPORARY EROSION CONTROL SYSTEMS
353001-04	PCC BASE COURSE WITH HMA BINDER AND SURFACE COURSES
420001-08	PAVEMENT JOINTS
420101-05	24' (7.2 m) JOINTED PCC PAVEMENT
420106-05	36' (10.8 m) JOINTED PCC PAVEMENT
420111-03	PCC PAVEMENT ROUNDOUTS
420201-10	ENTRANCE RAMP TERMINAL (JOINTED PCC RAMP PAVEMENT ADJACENT TO JOINTED PCC MAINLINE PAVEMENT)
420301-07	EXIT RAMP TERMINAL (JOINTED PCC RAMP PAVEMENT ADJACENT TO JOINTED PCC MAINLINE PAVEMENT)
420401-12	PAVEMENT CONNECTOR (PCC) FOR BRIDGE APPROACH SLAB
420701-03	PAVEMENT WELDED WIRE REINFORCEMENT
421001-03	BAR REINFORCEMENT FOR CRC PAVEMENT
424001-09	PERPENDICULAR CURB RAMPS FOR SIDEWALKS
424006-02	DIAGONAL CURB RAMPS FOR SIDEWALKS
424011-03	CORNER PARALLEL CURB RAMPS FOR SIDEWALKS
424021-03	DEPRESSED CORNER FOR SIDEWALKS
424026-01	ENTRANCE / ALLEY PEDESTRIAN CROSSINGS
424031-01	MEDIAN PEDESTRIAN CROSSINGS
442101-07	CLASS B PATCHES
483001-04	PCC SHOULDER
515001-03	NAME PLATE FOR BRIDGES
542301-03	PRECAST REINFORCED CONCRETE FLARED END SECTION
601101-02	CONCRETE HEADWALL FOR PIPE DRAIN
602106-01	DRAINAGE STRUCTURES TYPES 4, 5 & 6
602306-03	INLET - TYPE B
602401-03	MANHOLE TYPE A
602406-07	MANHOLE TYPE A 6' (1.8 m) DIAMETER
602411-05	MANHOLE TYPE A 7' (2.1 m) DIAMETER
602416-05	MANHOLE TYPE A 8' (2.4 m) DIAMETER
602421-05	MANHOLE TYPE A 9' (2.7 m) DIAMETER
602601-04	PRECAST REINFORCED CONCRETE FLAT SLAB TOP
602701-02	MANHOLE STEPS
604001-04	FRAME AND LIDS TYPE 1
604016-04	FRAME AND GRATE TYPE 4
604036-03	GRATE TYPE 8
604041-03	FRAME AND GRATE TYPE 9
604051-04	FRAME AND GRATE TYPE 11
604071-05	FRAME AND GRATE TYPE 20
606001-06	CONCRETE CURB TYPE B AND COMBINATION CONCRETE CURB AND GUTTER
606301-04	PC CONCRETE ISLANDS AND MEDIANS
606306-04	CORRUGATED PC CONCRETE MEDIANS
630001-11	STEEL PLATE BEAM GUARDRAIL
630301-07	SHOULDER WIDENING FOR TYPE 1 (SPECIAL) GUARDRAIL TERMINALS
631031-15	TRAFFIC BARRIER TERMINAL, TYPE 6
635001-02	DELINEATORS
637006-03	CONCRETE BARRIER, DOUBLE FACE, 42 in. (1065 mm) HEIGHT
642001-02	SHOULDER RUMBLE STRIPS, 16 in.
664001-02	CHAIN LINK FENCE
667101-02	PERMANENT SURVEY MARKERS
668001-01	U.S. GEOLOGICAL SURVEY AND NATIONAL GEODETIC SURVEY BENCHMARKS RESETTING METHOD
701001-02	OFF-RD OPERATIONS, 2L, 2W, MORE THAN 15' (4.5 m) AWAY
701006-05	OFF-RD OPERATIONS, 2L, 2W, 15' (4.5 m) TO 24" (600 mm) FROM PAVEMENT EDGE
701011-04	OFF-RD MOVING OPERATIONS, 2L, 2W, DAY ONLY
701101-05	OFF-RD OPERATIONS, MULTILANE, 15' (4.5 m) TO 24" (600 mm) FROM PAVEMENT EDGE
701106-02	OFF-RD OPERATIONS, MULTILANE, MORE THAN 15' (4.5 m) AWAY
701301-04	LANE CLOSURE, 2L, 2W, SHORT TIME OPERATIONS
701311-03	LANE CLOSURE 2L, 2W MOVING OPERATIONS - DAY ONLY
701400-09	APPROACH TO LANE CLOSURE, FREEWAY/EXPRESSWAY
701401-10	LANE CLOSURE, FREEWAY/EXPRESSWAY
701411-09	LANE CLOSURE, MULTILANE, AT ENTRANCE OR EXIT RAMP, FOR SPEEDS >= 45 MPH
701426-09	LANE CLOSURE, MULTILANE, INTERMITTENT OR MOVING OPER., FOR SPEEDS >= 45 MPH
701427-05	LANE CLOSURE, MULTILANE, INTERMITTENT OR MOVING OPER., FOR SPEEDS =< 40 MPH
701428-01	TRAFFIC CONTROL SETUP AND REMOVAL FREEWAY/EXPRESSWAY
701446-08	TWO LANE CLOSURE, FREEWAY/EXPRESSWAY
701451-04	RAMP CLOSURE FREEWAY/EXPRESSWAY
701456-04	PARTIAL EXIT RAMP CLOSURE FREEWAY/EXPRESSWAY
701601-09	URBAN LANE CLOSURE, MULTILANE, 1W OR 2W WITH NONTRAVERSABLE MEDIAN
701606-10	URBAN SINGLE LANE CLOSURE, MULTILANE, 2W WITH MOUNTABLE MEDIAN
701701-10	URBAN LANE CLOSURE, MULTILANE INTERSECTION
701801-06	SIDEWALK, CORNER OR CROSSWALK CLOSURE
701901-06	TRAFFIC CONTROL DEVICES
704001-08	TEMPORARY CONCRETE BARRIER
720001-01	SIGN PANEL MOUNTING DETAILS
720006-04	SIGN PANEL ERECTION DETAILS
720011-01	METAL POSTS FOR SIGNS, MARKERS & DELINEATORS
720016-03	MAST ARM MOUNTED STREET NAME SIGNS
720021-02	SIGN PANELS EXTRUDED ALUMINUM TYPE
725001-01	OBJECT AND TERMINAL MARKERS
728001-01	TELESCOPING STEEL SIGN SUPPORT
729001-01	APPLICATIONS OF TYPES A & B METAL POSTS (FOR SIGNS & MARKERS)
731001-01	BASE FOR TELESCOPING STEEL SIGN SUPPORT
780001-05	TYPICAL PAVEMENT MARKINGS
781001-04	TYPICAL APPLICATIONS RAISED REFLECTIVE PAVEMENT MARKERS
782006	GUARDRAIL AND BARRIER WALL REFLECTOR MOUNTING DETAILS
805001-01	ELECTRICAL SERVICE INSTALLATION DETAILS
812001	RACEWAY EMBEDDED IN STRUCTURE
814001-03	HANDHOLES
814006-02	DOUBLE HANDHOLES
821006	UNDERPASS LIGHTING SUSPENDED
821101-02	LUMINAIRE WIRING IN POLE
825011-03	LIGHTING CONTROLLER PEDESTAL MOUNTED, 240V
830026	TEMPORARY ROADWAY LIGHTING
836001-02	LIGHT POLE FOUNDATION
838001	BREAKAWAY DEVICES
857001-01	STANDARD PHASE DESIGNATION DIAGRAMS AND PHASE SEQUENCES
857006-01	SUPERVISED RAILROAD INTERCONNECT CIRCUIT
862001-01	UNINTERRUPTABLE POWER SUPPLY (UPS)
873001-02	TRAFFIC SIGNAL GROUNDING & BONDING
876001-04	PEDESTRIAN PUSH BUTTON POST
877001-06	STEEL MAST ARM ASSEMBLY AND POLE 16' THROUGH 55'
877002-03	STEEL MAST ARM ASSEMBLY AND POLE 56' THROUGH 75'
877006-05	STEEL MAST ARM ASSEMBLY AND POLE WITH DUAL MAST ARMS
877011-08	STEEL COMB. MAST ARM ASSEMBLY AND POLE 16' THROUGH 55'
877012-05	STEEL COMB. MAST ARM ASSEMBLY AND POLE 56' THROUGH 75'
878001-10	CONCRETE FOUNDATION DETAILS
880001-01	SPAN WIRE MOUNTED SIGNALS AND FLASHING BEACON INSTALLATION
880006-01	TRAFFIC SIGNAL MOUNTING DETAILS

LAYOUT	CBP	11/2/2014
DRAWN	MTH	10/27/2015
REVIEWED	KRH	10/27/2015

FILE NAME = D20CNAB-HPS-sht-gennote204M.dgn	USER NAME = mehn0663	DESIGNED - CBP	REVISED -
		DRAWN - MTH	REVISED -
	PLOT SCALE =	CHECKED - KRH	REVISED -
	PLOT DATE = 1/19/2017	DATE - 1/20/2017	REVISED -

STATE OF ILLINOIS
DEPARTMENT OF TRANSPORTATION

INDEX OF SHEETS & HIGHWAY STANDARDS

SCALE: | SHEET NO. OF SHEETS | STA. TO STA.

IND-01

F.A.I RTE.	SECTION	COUNTY	TOTAL SHEETS	SHEET NO.
74	(81-1)R & 81-1HVBR	ROCK ISLAND	1504	3

CONTRACT NO. 64C08

ILLINOIS FED. AID PROJECT

REV 6-8-17

CODE NO.	ITEM	UNIT	TOTAL QUANTITY	CONSTRUCTION CODE															
				88.5% FEDERAL 11.5% STATE	88.5% FEDERAL 11.5% STATE	88.5% FEDERAL 11.5% STATE	88.5% FEDERAL 11.5% STATE	88.5% FEDERAL 11.5% STATE	88.5% FEDERAL 11.5% STATE	88.5% FEDERAL 11.5% STATE	88.5% FEDERAL 5.75% STATE 5.75% MOLINE	88.5% FEDERAL 11.5% STATE	88.5% FEDERAL 11.5% STATE	88.5% FEDERAL 11.5% STATE	88.5% FEDERAL 11.5% STATE	88.5% FEDERAL 11.5% STATE	88.5% FEDERAL 11.5% STATE	100% MOLINE	50% IOWA 50% ILLINOIS
				ROADWAY	ROADWAY	S.N. 081-0177	S.N. 081-0178	S.N. 081-0186	S.N. 081-0187	SAFETY	SAFETY	S.N. 081-6010	S.N. 081-6011	S.N. 081-6012	S.N. 081-6018	S.N. 081-6019	STRUCTURE	UTILITIES	OTHER
				0003	0004	0010	0010	0011	0011	0021	0021	0004	0004	0004	0004	0004	0004	0043	0044
				URBAN	URBAN	URBAN	URBAN	URBAN	URBAN	URBAN	URBAN	URBAN	URBAN	URBAN	URBAN	URBAN	URBAN	URBAN	URBAN
20100110	TREE REMOVAL (6 TO 15 UNITS DIAMETER)	UNIT	883	883															
20100210	TREE REMOVAL (OVER 15 UNITS DIAMETER)	UNIT	1430	1430															
20100500	TREE REMOVAL, ACRES	ACRE	2.50	2.50															
20200100	EARTH EXCAVATION	CU YD	57,025	725	56,300														
20201200	REMOVAL AND DISPOSAL OF UNSUITABLE MATERIAL	CU YD	91,690	41,015	50,675														
20400100	BORROW EXCAVATION	CU YD	180,930	92,950	87,980														
20700220	POROUS GRANULAR EMBANKMENT	CU YD	995	995															
20800150	TRENCH BACKFILL	CU YD	8641	3396	5245														
21001000	GEOTECHNICAL FABRIC FOR GROUND STABILIZATION	SQ YD	3801															3801	
21101615	TOPSOIL FURNISH AND PLACE, 4"	SQ YD	44,358	579	43,779														
25000210	SEEDING, CLASS 2A	ACRE	2.75		2.75														
25000310	SEEDING, CLASS 4	ACRE	7.25	4.25	3.00														
25000400	NITROGEN FERTILIZER NUTRIENT	POUND	980	380	600														
25000500	PHOSPHORUS FERTILIZER NUTRIENT	POUND	980	380	600														

14

* SPECIALTY ITEM

benesch engineers · scientists · planners
Alfred Benesch & Company
205 North Michigan Avenue, Suite 2400
Chicago, Illinois 60601
312-565-0450 Job No. 10061

FILE NAME = ...\500_48_Plan_Turn.dgn
MODEL: $MODEL
USER NAME = $USER$
PLOT SCALE =
PLOT DATE = 3/9/2017
DESIGNED - DTS
CHECKED - MRC
DRAWN - DTS
CHECKED - MRC
REVISED -
REVISED -
REVISED -
REVISED -

STATE OF ILLINOIS
DEPARTMENT OF TRANSPORTATION

SUMMARY OF QUANTITIES

SHEET NO. 1 OF 33 SHEETS

F.A.I. RTE.	SECTION	COUNTY	TOTAL SHEETS	SHEET NO.
74	(81-1)R & 81-1)VBR	ROCK ISLAND	1504	9
		CONTRACT NO. 64C08		
FED. ROAD DIST. NO. 7	ILLINOIS	FED. AID PROJECT		

500_48_Plan_Turn_In.dgn 11:12:45 AM 3/9/2017

REV 6-8-17

CODE NO.	ITEM	UNIT	TOTAL QUANTITY	88.5% FEDERAL 11.5% STATE ROADWAY 0003 URBAN	88.5% FEDERAL 11.5% STATE ROADWAY 0004 URBAN	88.5% FEDERAL 11.5% STATE S.N. 081-0177 0010 URBAN	88.5% FEDERAL 11.5% STATE S.N. 081-0178 0010 URBAN	88.5% FEDERAL 11.5% STATE S.N. 081-0186 0011 URBAN	88.5% FEDERAL 11.5% STATE S.N. 081-0187 0011 URBAN	88.5% FEDERAL 11.5% STATE SAFETY 0021 URBAN	88.5% FEDERAL 5.75% STATE 5.75% MOLINE SAFETY 0021 URBAN	88.5% FEDERAL 11.5% STATE S.N. 081-6010 0004 URBAN	88.5% FEDERAL 11.5% STATE S.N. 081-6011 0004 URBAN	88.5% FEDERAL 11.5% STATE S.N. 081-6012 0004 URBAN	88.5% FEDERAL 11.5% STATE S.N. 081-6018 0004 URBAN	88.5% FEDERAL 11.5% STATE S.N. 081-6019 0004 URBAN	88.5% FEDERAL 11.5% STATE STRUCTURE 0004 URBAN	100% MOLINE UTILITIES 0043 URBAN	50% IOWA 50% ILLINOIS OTHER 0044 URBAN
				CONSTRUCTION CODE															
28500200	PRECAST BLOCK REVETMENT MAT	SQ YD	1764	1764															
30300001	AGGREGATE SUBGRADE IMPROVEMENT	CU YD	41	41	41														
30300011	AGGREGATE SUBGRADE IMPROVEMENT	TON	2000	2000															
30300112	AGGREGATE SUBGRADE IMPROVEMENT 12"	SQ YD	43,814		43,814														
30300124	AGGREGATE SUBGRADE IMPROVEMENT 24"	SQ YD	1165		1165														
31100800	SUBBASE GRANULAR MATERIAL, TYPE A 9"	SQ YD	189		189														
31200100	STABILIZED SUBBASE 4"	SQ YD	50,087	7549	42,538														
35100300	AGGREGATE BASE COURSE, TYPE A 4"	SQ YD	155															155	
35100500	AGGREGATE BASE COURSE, TYPE A 6"	SQ YD	4059															4059	
40600290	BITUMINOUS MATERIALS (TACK COAT)	POUND	1716		155													1561	
40600295	POLYMERIZED BITUMINOUS MATERIALS (TACK COAT)	POUND	2232		2232														
40600825	POLYMERIZED LEVELING BINDER (MACHINE METHOD), N50	TON	153		153														
40600985	PORTLAND CEMENT CONCRETE SURFACE REMOVAL - BUTT JOINT	SQ YD	376		376														
40603085	HOT-MIX ASPHALT BINDER COURSE, IL-19.0, N70	TON	518															518	

* SPECIALTY ITEM

benesch
engineers · scientists · planners
Alfred Benesch & Company
205 North Michigan Avenue, Suite 2400
Chicago, Illinois 60601
312-565-0450 Job No. 10061

FILE NAME = ...\500_AB_Plan_Turn_In.dgn	USER NAME = $USER$	DESIGNED - DTS	REVISED -
		CHECKED - MRC	REVISED -
MODEL: $MODEL	PLOT SCALE =	DRAWN - DTS	REVISED -
	PLOT DATE = 3/9/2017	CHECKED - MRC	REVISED -

STATE OF ILLINOIS
DEPARTMENT OF TRANSPORTATION

SUMMARY OF QUANTITIES

SHEET NO. 3 OF 33 SHEETS

F.A.I. RTE.	SECTION	COUNTY	TOTAL SHEETS	SHEET NO.
74	(8)-1)R & 8)-1HVBR	ROCK ISLAND	1504	11
		CONTRACT NO. 64C08		
FED. ROAD DIST. NO. 7	ILLINOIS	FED. AID PROJECT		

3/9/2017 11:13:03 AM SOQ_AB_Plan_Turn_In.dgn

REV 6-8-17

CODE NO.	ITEM	UNIT	TOTAL QUANTITY	88.5% FEDERAL 11.5% STATE ROADWAY 0003 URBAN	88.5% FEDERAL 11.5% STATE ROADWAY 0004 URBAN	88.5% FEDERAL 11.5% STATE S.N. 081-0177 0010 URBAN	88.5% FEDERAL 11.5% STATE S.N. 081-0178 0010 URBAN	88.5% FEDERAL 11.5% STATE S.N. 081-0186 0011 URBAN	88.5% FEDERAL 11.5% STATE S.N. 081-0187 0011 URBAN	88.5% FEDERAL 11.5% STATE SAFETY 0021 URBAN	88.5% FEDERAL 5.75% STATE 5.75% MOLINE SAFETY 0021 URBAN	88.5% FEDERAL 11.5% STATE S.N. 081-6010 0004 URBAN	88.5% FEDERAL 11.5% STATE S.N. 081-6011 0004 URBAN	88.5% FEDERAL 11.5% STATE S.N. 081-6012 0004 URBAN	88.5% FEDERAL 11.5% STATE S.N. 081-6018 0004 URBAN	88.5% FEDERAL 11.5% STATE S.N. 081-6019 0004 URBAN	88.5% FEDERAL 11.5% STATE STRUCTURE 0004 URBAN	100% MOLINE UTILITIES 0043 URBAN	50% IOWA 50% ILLINOIS OTHER 0044 URBAN
40603310	HOT-MIX ASPHALT SURFACE COURSE, MIX "C", N50	TON	67		49													18	
40603315	HOT-MIX ASPHALT SURFACE COURSE, MIX "C", N70	TON	304															304	
40603585	POLYMERIZED HOT-MIX ASPHALT SURFACE COURSE, MIX "F", N50	TON	229		229														
42000060	WELDED WIRE REINFORCEMENT	SQ YD	1,315		1,315														
42000080	PAVEMENT CONNECTOR (PCC) FOR BRIDGE APPROACH SLAB	SQ YD	978	696	282	1													
42000406	PORTLAND CEMENT CONCRETE PAVEMENT 9 1/4" (JOINTED)	SQ YD	27,293		27,293														
42000511	PORTLAND CEMENT CONCRETE PAVEMENT 10 1/2" (JOINTED)	SQ YD	16233	6227	10006	1													
42001300	PROTECTIVE COAT	SQ YD	91198	13642	77556														
42300300	PORTLAND CEMENT CONCRETE DRIVEWAY PAVEMENT, 7 INCH	SQ YD	1471		1471														
42400200	PORTLAND CEMENT CONCRETE SIDEWALK 5 INCH	SQ FT	18,581.0		18,581.0														
42400800	DETECTABLE WARNINGS	SQ FT	451		451														
44000100	PAVEMENT REMOVAL	SQ YD	50,872		50,872														
44000159	HOT-MIX ASPHALT SURFACE REMOVAL, 2 1/2"	SQ YD	2855		2855														
44000200	DRIVEWAY PAVEMENT REMOVAL	SQ YD	1037		1037														

14

* SPECIALTY ITEM

benesch
engineers · scientists · planners
Alfred Benesch & Company
205 North Michigan Avenue, Suite 2400
Chicago, Illinois 60601
312-565-0450 Job No. 10061

FILE NAME = ...\500_AB_Plan_Turn_In.dgn
MODEL: $MODEL
USER NAME = $USER$
PLOT SCALE =
PLOT DATE = 3/9/2017
DESIGNED - DTS
CHECKED - MRC
DRAWN - DTS
CHECKED - MRC
REVISED -
REVISED -
REVISED -
REVISED -

STATE OF ILLINOIS
DEPARTMENT OF TRANSPORTATION

SUMMARY OF QUANTITIES

SHEET NO. 4 OF 33 SHEETS

F.A.I. RTE.	SECTION	COUNTY	TOTAL SHEETS	SHEET NO.
74	(81-1)R & 81-1HVBR	ROCK ISLAND	1504	12

CONTRACT NO. 64C08

FED. ROAD DIST. NO. 7 ILLINOIS FED. AID PROJECT

500_AB_Plan_Turn_In.dgn 11:13:12 AM 3/9/2017

REV 6-8-17

CODE NO.	ITEM	UNIT	TOTAL QUANTITY	88.5% FEDERAL 11.5% STATE ROADWAY 0003 URBAN	88.5% FEDERAL 11.5% STATE ROADWAY 0004 URBAN	88.5% FEDERAL 11.5% STATE S.N. 081-0177 0010 URBAN	88.5% FEDERAL 11.5% STATE S.N. 081-0178 0010 URBAN	88.5% FEDERAL 11.5% STATE S.N. 081-0186 0011 URBAN	88.5% FEDERAL 11.5% STATE S.N. 081-0187 0011 URBAN	88.5% FEDERAL 11.5% STATE SAFETY 0021 URBAN	88.5% FEDERAL 5.75% STATE 5.75% MOLINE SAFETY 0021 URBAN	88.5% FEDERAL 11.5% STATE S.N. 081-6010 0004 URBAN	88.5% FEDERAL 11.5% STATE S.N. 081-6011 0004 URBAN	88.5% FEDERAL 11.5% STATE S.N. 081-6012 0004 URBAN	88.5% FEDERAL 11.5% STATE S.N. 081-6018 0004 URBAN	88.5% FEDERAL 11.5% STATE S.N. 081-6019 0004 URBAN	88.5% FEDERAL 11.5% STATE STRUCTURE 0004 URBAN	100% MOLINE UTILITIES 0043 URBAN	50% IOWA 50% ILLINOIS OTHER 0044 URBAN
44000500	COMBINATION CURB AND GUTTER REMOVAL	FOOT	13,187		13,187														
44000600	SIDEWALK REMOVAL	SQ FT	23,760		23,760														
44003100	MEDIAN REMOVAL	SQ FT	51,677		51,677														
44200934	CLASS B PATCHES, TYPE II, 8 INCH	SQ YD	100		100														
44200942	CLASS B PATCHES, TYPE III, 8 INCH	SQ YD	145		145														
44200976	CLASS B PATCHES, TYPE IV, 10 INCH	SQ YD	960		960	A													
44201294	CLASS B PATCH - EXPANSION JOINT	FOOT	173		173														
44201296	DEFORMED BARS - EXPANSION JOINT	EACH	160		160														
44201299	DOWEL BARS 1 1/2"	EACH	560		560	A													
44213200	SAW CUTS	FOOT	1846		1846														
44213204	TIE BARS 3/4"	EACH	582		582														
48100500	AGGREGATE SHOULDERS, TYPE A 6"	SQ YD	119		119														
48203009	HOT-MIX ASPHALT SHOULDERS, 3"	SQ YD	181		181														
50100300	REMOVAL OF EXISTING STRUCTURES NO. 1	EACH	1														1		

14

* SPECIALTY ITEM

benesch
engineers · scientists · planners
Alfred Benesch & Company
205 North Michigan Avenue, Suite 2400
Chicago, Illinois 60601
312-565-0450 Job No. 10061

FILE NAME = ...\500_AB_Plan_Turn_In.dgn	USER NAME = $USER$	DESIGNED - DTS	REVISED -
		CHECKED - MRC	REVISED -
MODEL: $MODEL	PLOT SCALE =	DRAWN - DTS	REVISED -
	PLOT DATE = 3/9/2017	CHECKED - MRC	REVISED -

STATE OF ILLINOIS
DEPARTMENT OF TRANSPORTATION

SUMMARY OF QUANTITIES

SHEET NO. 5 OF 33 SHEETS

F.A.I. RTE.	SECTION	COUNTY	TOTAL SHEETS	SHEET NO.
74	(81-1)R & 81-1)VBR	ROCK ISLAND	1504	13
		CONTRACT NO. 64C08		
FED. ROAD DIST. NO. 7	ILLINOIS	FED. AID PROJECT		

500_AB_Plan_Turn_In.dgn 11:13:21 AM 3/9/2017

A REV 6-8-17

CODE NO.	ITEM	UNIT	TOTAL QUANTITY	CONSTRUCTION CODE: 88.5% FEDERAL 11.5% STATE ROADWAY 0003 URBAN	88.5% FEDERAL 11.5% STATE ROADWAY 0004 URBAN	88.5% FEDERAL 11.5% STATE S.N. 081-0177 0010 URBAN	88.5% FEDERAL 11.5% STATE S.N. 081-0178 0010 URBAN	88.5% FEDERAL 11.5% STATE S.N. 081-0186 0011 URBAN	88.5% FEDERAL 11.5% STATE S.N. 081-0187 0011 URBAN	88.5% FEDERAL 11.5% STATE SAFETY 0021 URBAN	88.5% FEDERAL 5.75% STATE 5.75% MOLINE SAFETY 0021 URBAN	88.5% FEDERAL 11.5% STATE S.N. 081-6010 0004 URBAN	88.5% FEDERAL 11.5% STATE S.N. 081-6011 0004 URBAN	88.5% FEDERAL 11.5% STATE S.N. 081-6012 0004 URBAN	88.5% FEDERAL 11.5% STATE S.N. 081-6018 0004 URBAN	88.5% FEDERAL 11.5% STATE S.N. 081-6019 0004 URBAN	88.5% FEDERAL 11.5% STATE STRUCTURE 0004 URBAN	100% MOLINE UTILITIES 0043 URBAN	50% IOWA 50% ILLINOIS OTHER 0044 URBAN
50100400	REMOVAL OF EXISTING STRUCTURES NO. 2	EACH	1														1		
50100500	REMOVAL OF EXISTING STRUCTURES NO. 3	EACH	1														1		
50102400	CONCRETE REMOVAL	CU YD	160.9														160.9		
50157300	PROTECTIVE SHIELD	SQ YD	32,077			1114	1324	747	637								28,255		
50200100	STRUCTURE EXCAVATION	CU YD	7433	1432	Δ	2124	2367	20	116			270	252	368		397		87	
50200400	ROCK EXCAVATION FOR STRUCTURES	CU YD	1,087	1,074						8	1						4		
50200450	REMOVAL AND DISPOSAL OF UNSUITABLE MATERIAL FOR STRUCTURES	CU YD	1903									177	1726						
50300225	CONCRETE STRUCTURES	CU YD	4,861.0			2,028.8	2,207.3	186.8	267.6								70.5	62.0	38.0
50300255	CONCRETE SUPERSTRUCTURE	CU YD	12,119.5			4,261.9	4,754.3	542.1	639.7			263.7	188.8	148.3	193.5	92.9	1,034.3		
50300260	BRIDGE DECK GROOVING	SQ YD	33,406			13,887	15,629	1341	1658								691		
50300280	CONCRETE ENCASEMENT	CU YD	14.1			6.5	7.6												
50300300	PROTECTIVE COAT	SQ YD	42,937			16,179	18,131	1606	2238			603	412	339	391	212	2,626		
50500105	FURNISHING AND ERECTING STRUCTURAL STEEL	L SUM	1			0.40	0.50	0.05	0.05										
50500505	STUD SHEAR CONNECTORS	EACH	101,705			43,826	49,291	4232	4356										

14

* SPECIALTY ITEM

benesch
engineers · scientists · planners
Alfred Benesch & Company
205 North Michigan Avenue, Suite 2400
Chicago, Illinois 60601
312-565-0450 Job No. 10061

FILE NAME = ...\500_AB_Plan_Turn_In.dgn
MODEL: $MODEL
USER NAME = $USER$
PLOT SCALE = 1
PLOT DATE = 3/9/2017
DESIGNED - DTS
CHECKED - MRC
DRAWN - DTS
CHECKED - MRC
REVISED -
REVISED -
REVISED -
REVISED -

STATE OF ILLINOIS
DEPARTMENT OF TRANSPORTATION

SUMMARY OF QUANTITIES

SHEET NO. 6 OF 33 SHEETS

F.A.I. RTE.	SECTION	COUNTY	TOTAL SHEETS	SHEET NO.
74	(81-1)R & 81-1)VBR	ROCK ISLAND	1504	14

CONTRACT NO. 64C08

FED. ROAD DIST. NO. 7 ILLINOIS FED. AID PROJECT

500_AB_Plan_Turn_In.dgn 11:13:30 AM 3/9/2017

Δ REV 6-8-17

CODE NO.	ITEM	UNIT	TOTAL QUANTITY	88.5% FEDERAL 11.5% STATE ROADWAY 0003 URBAN	88.5% FEDERAL 11.5% STATE ROADWAY 0004 URBAN	88.5% FEDERAL 11.5% STATE S.N. 081-0177 0010 URBAN	88.5% FEDERAL 11.5% STATE S.N. 081-0178 0010 URBAN	88.5% FEDERAL 11.5% STATE S.N. 081-0186 0011 URBAN	88.5% FEDERAL 11.5% STATE S.N. 081-0187 0011 URBAN	88.5% FEDERAL 11.5% STATE SAFETY 0021 URBAN	88.5% FEDERAL 5.75% STATE 5.75% MOLINE SAFETY 0021 URBAN	88.5% FEDERAL 11.5% STATE S.N. 081-6010 0004 URBAN	88.5% FEDERAL 11.5% STATE S.N. 081-6011 0004 URBAN	88.5% FEDERAL 11.5% STATE S.N. 081-6012 0004 URBAN	88.5% FEDERAL 11.5% STATE S.N. 081-6018 0004 URBAN	88.5% FEDERAL 11.5% STATE S.N. 081-6019 0004 URBAN	88.5% FEDERAL 11.5% STATE STRUCTURE 0004 URBAN	100% MOLINE UTILITIES 0043 URBAN	50% IOWA 50% ILLINOIS OTHER 0044 URBAN
50800105	REINFORCEMENT BARS	POUND	80		80												4		
50800205	REINFORCEMENT BARS, EPOXY COATED	POUND	432070	4		1,668,040	1,817,500	184,570	236,530	320		40120	31680	22550	40240	14060	256840	6350	3270
50800515	BAR SPLICERS	EACH	427			160	167	50	50										
50901760	PIPE HANDRAIL	FOOT	68		68														
51100100	SLOPE WALL 4 INCH	SQ YD	967			383	420		164										
51201700	FURNISHING STEEL PILES HP12X74	FOOT	266																266
51201800	FURNISHING STEEL PILES HP14X73	FOOT	9252			4522	3293	645	792										
51201900	FURNISHING STEEL PILES HP14X89	FOOT	3151			539	2612												
51202305	DRIVING PILES	FOOT	12,669			5061	5905	645	792										266
51203700	TEST PILE STEEL HP12X74	EACH	1																1
51203800	TEST PILE STEEL HP14X73	EACH	23			11	7	2	3										
51203900	TEST PILE STEEL HP14X89	EACH	6			1	5												
51204650	PILE SHOES	EACH	681			284	320	27	42										8
51500100	NAME PLATES	EACH	9			1	1	1	1			1	1	1	1	1			

14

* SPECIALTY ITEM

benesch engineers · scientists · planners
Alfred Benesch & Company
205 North Michigan Avenue, Suite 2400
Chicago, Illinois 60601
312-565-0450 Job No. 10061

FILE NAME = ...\500_AB_Plan_Turn_In.dgn
MODEL: *MODEL
USER NAME = *USER*
PLOT SCALE =
PLOT DATE = 3/9/2017
DESIGNED - DTS
CHECKED - MRC
DRAWN - DTS
CHECKED - MRC
REVISED -
REVISED -
REVISED -
REVISED -

STATE OF ILLINOIS
DEPARTMENT OF TRANSPORTATION

SUMMARY OF QUANTITIES

SHEET NO. 7 OF 33 SHEETS

F.A.I. RTE.	SECTION	COUNTY	TOTAL SHEETS	SHEET NO.
74	(B1-1)R & B1-1HVBR	ROCK ISLAND	1504	15

CONTRACT NO. 64C08

FED. ROAD DIST. NO. 7 | ILLINOIS | FED. AID PROJECT

500_AB_Plan_Turn_In.dgn 11:13:39 AM 3/9/2017

REV 6-8-17

CODE NO.	ITEM	UNIT	TOTAL QUANTITY	88.5% FEDERAL 11.5% STATE ROADWAY 0003 URBAN	88.5% FEDERAL 11.5% STATE ROADWAY 0004 URBAN	88.5% FEDERAL 11.5% STATE S.N. 081-0177 0010 URBAN	88.5% FEDERAL 11.5% STATE S.N. 081-0178 0010 URBAN	88.5% FEDERAL 11.5% STATE S.N. 081-0186 0011 URBAN	88.5% FEDERAL 11.5% STATE S.N. 081-0187 0011 URBAN	88.5% FEDERAL 11.5% STATE SAFETY 0021 URBAN	88.5% FEDERAL 5.75% STATE 5.75% MOLINE SAFETY 0021 URBAN	88.5% FEDERAL 11.5% STATE S.N. 081-6010 0004 URBAN	88.5% FEDERAL 11.5% STATE S.N. 081-6011 0004 URBAN	88.5% FEDERAL 11.5% STATE S.N. 081-6012 0004 URBAN	88.5% FEDERAL 11.5% STATE S.N. 081-6018 0004 URBAN	88.5% FEDERAL 11.5% STATE S.N. 081-6019 0004 URBAN	88.5% FEDERAL 11.5% STATE STRUCTURE 0004 URBAN	100% MOLINE UTILITIES 0043 URBAN	50% IOWA 50% ILLINOIS OTHER 0044 URBAN
52000110	PREFORMED JOINT STRIP SEAL	FOOT	363.5			145.0	153.5	32.0	33.0										
52000208	FINGER PLATE EXPANSION JOINT, 3"	FOOT	74.0				74.0												
52000212	FINGER PLATE EXPANSION JOINT, 4"	FOOT	294.0			218.0	76.0												
52000216	FINGER PLATE EXPANSION JOINT, 5"	FOOT	66.5				66.5												
52100010	ELASTOMERIC BEARING ASSEMBLY, TYPE I	EACH	60			25	31		4										
52100020	ELASTOMERIC BEARING ASSEMBLY, TYPE II	EACH	66			28	34		4										
52100510	ANCHOR BOLTS, 3/4"	EACH	48																48
52100515	ANCHOR BOLTS, 7/8"	EACH	36															36	
52100520	ANCHOR BOLTS, 1"	EACH	900			362	442	48	48										
52200800	SEGMENTAL CONCRETE BLOCK WALL	SQ FT	1,025		1,025														
54210206	PIPE ELBOW, 72"	EACH	3		3														
54213663	PRECAST REINFORCED CONCRETE FLARED END SECTIONS 18"	EACH	1		1														
54213681	PRECAST REINFORCED CONCRETE FLARED END SECTIONS 36"	EACH	1	1															
54213717	PRECAST REINFORCED CONCRETE FLARED END SECTIONS 72"	EACH	1	1															
550A0340	STORM SEWERS, CLASS A, TYPE 2 12"	FOOT	2828	732	2096														

* SPECIALTY ITEM

benesch engineers · scientists · planners
Alfred Benesch & Company
205 North Michigan Avenue, Suite 2400
Chicago, Illinois 60601
312-565-0450 Job No. 10061

FILE NAME = ...\500_AB_Plan_Turn_In.dgn	USER NAME = $USER$	DESIGNED - DTS	REVISED -
		CHECKED - MRC	REVISED -
MODEL: $MODEL	PLOT SCALE =	DRAWN - DTS	REVISED -
	PLOT DATE = 3/9/2017	CHECKED - MRC	REVISED -

STATE OF ILLINOIS
DEPARTMENT OF TRANSPORTATION

SUMMARY OF QUANTITIES

SHEET NO. 8 OF 33 SHEETS

F.A.I. RTE.	SECTION	COUNTY	TOTAL SHEETS	SHEET NO.
74	(81-1)R & (81-1)HVBR	ROCK ISLAND	1504	16
		CONTRACT NO. 64C08		
FED. ROAD DIST. NO. 7	ILLINOIS	FED. AID PROJECT		

500_AB_Plan_Turn_In.dgn
11:13:48 AM
3/9/2017

REV 6-8-17

CODE NO.	ITEM	UNIT	TOTAL QUANTITY	88.5% FEDERAL 11.5% STATE ROADWAY 0003 URBAN	88.5% FEDERAL 11.5% STATE ROADWAY 0004 URBAN	88.5% FEDERAL 11.5% STATE S.N. 081-0177 0010 URBAN	88.5% FEDERAL 11.5% STATE S.N. 081-0178 0010 URBAN	88.5% FEDERAL 11.5% STATE S.N. 081-0186 0011 URBAN	88.5% FEDERAL 11.5% STATE S.N. 081-0187 0011 URBAN	88.5% FEDERAL 11.5% STATE SAFETY 0021 URBAN	88.5% FEDERAL 5.75% STATE 5.75% MOLINE SAFETY 0021 URBAN	88.5% FEDERAL 11.5% STATE S.N. 081-6010 0004 URBAN	88.5% FEDERAL 11.5% STATE S.N. 081-6011 0004 URBAN	88.5% FEDERAL 11.5% STATE S.N. 081-6012 0004 URBAN	88.5% FEDERAL 11.5% STATE S.N. 081-6018 0004 URBAN	88.5% FEDERAL 11.5% STATE S.N. 081-6019 0004 URBAN	88.5% FEDERAL 11.5% STATE STRUCTURE 0004 URBAN	100% MOLINE UTILITIES 0043 URBAN	50% IOWA 50% ILLINOIS OTHER 0044 URBAN
550A0360	STORM SEWERS, CLASS A, TYPE 2 15"	FOOT	1824	463	1,361														
550A0380	STORM SEWERS, CLASS A, TYPE 2 18"	FOOT	1,152	318	834														
550A0400	STORM SEWERS, CLASS A, TYPE 2 21"	FOOT	229	229		1													
550A0410	STORM SEWERS, CLASS A, TYPE 2 24"	FOOT	926	680	246														
550A0430	STORM SEWERS, CLASS A, TYPE 2 30"	FOOT	352	96	256														
550A0450	STORM SEWERS, CLASS A, TYPE 2 36"	FOOT	640	600	40														
550A0640	STORM SEWERS, CLASS A, TYPE 3 12"	FOOT	231	179	52														
550A0660	STORM SEWERS, CLASS A, TYPE 3 15"	FOOT	291	65	226														
550A0680	STORM SEWERS, CLASS A, TYPE 3 18"	FOOT	567	227	340														
550A0710	STORM SEWERS, CLASS A, TYPE 3 24"	FOOT	31	31															
550A0750	STORM SEWERS, CLASS A, TYPE 3 36"	FOOT	277	277															
550A0770	STORM SEWERS, CLASS A, TYPE 3 42"	FOOT	748	426	322														
550A0780	STORM SEWERS, CLASS A, TYPE 3 48"	FOOT	731	731															
550A0820	STORM SEWERS, CLASS A, TYPE 3 72"	FOOT	1100	768	332														

14

* SPECIALTY ITEM

benesch
engineers · scientists · planners
Alfred Benesch & Company
205 North Michigan Avenue, Suite 2400
Chicago, Illinois 60601
312-565-0450 Job No. 10061

FILE NAME = ...\100_R6_Plan_Turn_In.dgn	USER NAME = $USER$	DESIGNED - DTS	REVISED -
		CHECKED - MRC	REVISED -
MODEL: $MODEL	PLOT SCALE =	DRAWN - DTS	REVISED -
	PLOT DATE = 3/9/2017	CHECKED - MRC	REVISED -

STATE OF ILLINOIS
DEPARTMENT OF TRANSPORTATION

SUMMARY OF QUANTITIES

SHEET NO. 9 OF 33 SHEETS

F.A.I. RTE.	SECTION	COUNTY	TOTAL SHEETS	SHEET NO.
74	(81-1)R & 81-1HVBR	ROCK ISLAND	1504	17
		CONTRACT NO. 64C08		
FED. ROAD DIST. NO. 7	ILLINOIS	FED. AID PROJECT		

100_R6_Plan_Turn_In.dgn 11:13:57 AM 3/9/2017

A REV 6-8-17

CODE NO.	ITEM	UNIT	TOTAL QUANTITY	88.5% FEDERAL 11.5% STATE ROADWAY 0003 URBAN	88.5% FEDERAL 11.5% STATE ROADWAY 0004 URBAN	88.5% FEDERAL 11.5% STATE S.N. 081-0177 0010 URBAN	88.5% FEDERAL 11.5% STATE S.N. 081-0178 0010 URBAN	88.5% FEDERAL 11.5% STATE S.N. 081-0186 0011 URBAN	88.5% FEDERAL 11.5% STATE S.N. 081-0187 0011 URBAN	88.5% FEDERAL 11.5% STATE SAFETY 0021 URBAN	88.5% FEDERAL 5.75% STATE 5.75% MOLINE SAFETY 0021 URBAN	88.5% FEDERAL 11.5% STATE S.N. 081-6010 0004 URBAN	88.5% FEDERAL 11.5% STATE S.N. 081-6011 0004 URBAN	88.5% FEDERAL 11.5% STATE S.N. 081-6012 0004 URBAN	88.5% FEDERAL 11.5% STATE S.N. 081-6018 0004 URBAN	88.5% FEDERAL 11.5% STATE S.N. 081-6019 0004 URBAN	88.5% FEDERAL 11.5% STATE STRUCTURE 0004 URBAN	100% MOLINE UTILITIES 0043 URBAN	50% IOWA 50% ILLINOIS OTHER 0044 URBAN
				CONSTRUCTION CODE															
550A1070	STORM SEWERS, CLASS A, TYPE 4 42"	FOOT	319	319															
550A5100	STORM SEWERS, CLASS A, TYPE 2 EQUIVALENT ROUND-SIZE 30"	FOOT	36		36														
55100300	STORM SEWER REMOVAL 8"	FOOT	101		101														
55100400	STORM SEWER REMOVAL 10"	FOOT	70		70														
55100500	STORM SEWER REMOVAL 12"	FOOT	3642	242	3400														
55100700	STORM SEWER REMOVAL 15"	FOOT	483	138	345														
55100900	STORM SEWER REMOVAL 18"	FOOT	738	113	625														
55101100	STORM SEWER REMOVAL 21"	FOOT	51		51														
55101200	STORM SEWER REMOVAL 24"	FOOT	749		749														
55101400	STORM SEWER REMOVAL 30"	FOOT	625		625														
55101900	STORM SEWER REMOVAL 48"	FOOT	226		226														
55102300	STORM SEWER REMOVAL 72"	FOOT	184		184														
55200400	STORM SEWERS JACKED IN PLACE, 15"	FOOT	34		34														
55200900	STORM SEWERS JACKED IN PLACE, 24"	FOOT	249	249															

* SPECIALTY ITEM

benesch engineers · scientists · planners

Alfred Benesch & Company
205 North Michigan Avenue, Suite 2400
Chicago, Illinois 60601
312-565-0450 Job No. 10061

FILE NAME = ...1500_A8_Plan_Turn_In.dgn	USER NAME = $USER$	DESIGNED - DTS	REVISED -
		CHECKED - MRC	REVISED -
MODEL: $MODEL	PLOT SCALE =	DRAWN - DTS	REVISED -
	PLOT DATE = 3/9/2017	CHECKED - MRC	REVISED -

STATE OF ILLINOIS
DEPARTMENT OF TRANSPORTATION

SUMMARY OF QUANTITIES

SHEET NO. 10 OF 33 SHEETS

F.A.I. RTE.	SECTION	COUNTY	TOTAL SHEETS	SHEET NO.
74	(81-1)R & 81-1HVBR	ROCK ISLAND	1504	18
		CONTRACT NO. 64C08		
FED. ROAD DIST. NO. 7	ILLINOIS	FED. AID PROJECT		

S00_A8_Plan_Turn_In.dgn 11:14:06 AM 3/9/2017

REV 6-8-17

CODE NO.	ITEM	UNIT	TOTAL QUANTITY	CONSTRUCTION CODE															
				88.5% FEDERAL 11.5% STATE	88.5% FEDERAL 11.5% STATE	88.5% FEDERAL 11.5% STATE	88.5% FEDERAL 11.5% STATE	88.5% FEDERAL 11.5% STATE	88.5% FEDERAL 11.5% STATE	88.5% FEDERAL 11.5% STATE	88.5% FEDERAL 5.75% STATE 5.75% MOLINE	88.5% FEDERAL 11.5% STATE	88.5% FEDERAL 11.5% STATE	88.5% FEDERAL 11.5% STATE	88.5% FEDERAL 11.5% STATE	88.5% FEDERAL 11.5% STATE	88.5% FEDERAL 11.5% STATE	100% MOLINE	50% IOWA 50% ILLINOIS
				ROADWAY	ROADWAY	S.N. 081-0177	S.N. 081-0178	S.N. 081-0186	S.N. 081-0187	SAFETY	SAFETY	S.N. 081-6010	S.N. 081-6011	S.N. 081-6012	S.N. 081-6018	S.N. 081-6019	STRUCTURE	UTILITIES	OTHER
				0003	0004	0010	0010	0011	0011	0021	0021	0004	0004	0004	0004	0004	0004	0043	0044
				URBAN	URBAN	URBAN	URBAN	URBAN	URBAN	URBAN	URBAN	URBAN	URBAN	URBAN	URBAN	URBAN	URBAN	URBAN	URBAN
55201600	STORM SEWERS JACKED IN PLACE, 48"	FOOT	247	247															
56400300	FIRE HYDRANTS TO BE ADJUSTED	EACH	2															2	
58700300	CONCRETE SEALER	SQ FT	25,861			11,646	12,523	1192	500										
59100100	GEOCOMPOSITE WALL DRAIN	SQ YD	211			100	111												
60100060	CONCRETE HEADWALLS FOR PIPE DRAINS	EACH	1		1														
60108200	PIPE UNDERDRAINS 6" (SPECIAL)	FOOT	7		7														
60108206	PIPE UNDERDRAINS, TYPE 2, 6"	FOOT	2861	1842	11019														
60218300	MANHOLES, TYPE A, 4'-DIAMETER, TYPE 1 FRAME, OPEN LID	EACH	5		5														
60218400	MANHOLES, TYPE A, 4'-DIAMETER, TYPE 1 FRAME, CLOSED LID	EACH	14	8	6														
60218600	MANHOLES, TYPE A, 4'-DIAMETER, TYPE 4 FRAME AND GRATE	EACH	2	2															
60219000	MANHOLES, TYPE A, 4'-DIAMETER, TYPE 8 GRATE	EACH	2	2															
60219100	MANHOLES, TYPE A, 4'-DIAMETER, TYPE 9 FRAME AND GRATE	EACH	5	2	3														
60219300	MANHOLES, TYPE A, 4'-DIAMETER, TYPE 11 FRAME AND GRATE	EACH	3		3														

* SPECIALTY ITEM

benesch
engineers · scientists · planners
Alfred Benesch & Company
205 North Michigan Avenue, Suite 2400
Chicago, Illinois 60601
312-565-0450 Job No. 10061

FILE NAME = ...\S00_AB_Plan_Turn_In.dgn	USER NAME = $USER$	DESIGNED - DTS	REVISED -
		CHECKED - MRC	REVISED -
MODEL: $MODEL	PLOT SCALE =	DRAWN - DTS	REVISED -
	PLOT DATE = 3/9/2017	CHECKED - MRC	REVISED -

STATE OF ILLINOIS
DEPARTMENT OF TRANSPORTATION

SUMMARY OF QUANTITIES

SHEET NO. 11 OF 33 SHEETS

F.A.I. RTE.	SECTION	COUNTY	TOTAL SHEETS	SHEET NO.
74	(81-1)R & 81-1HVBR	ROCK ISLAND	1504	19
		CONTRACT NO. 64C08		
FED. ROAD DIST. NO. 7	ILLINOIS	FED. AID PROJECT		

S00_AB_Plan_Turn_In.dgn 11:14:15 AM 3/9/2017

A REV 6-8-17

CODE NO.	ITEM	UNIT	TOTAL QUANTITY	CONSTRUCTION CODE															
				88.5% FEDERAL 11.5% STATE	88.5% FEDERAL 11.5% STATE	88.5% FEDERAL 11.5% STATE	88.5% FEDERAL 11.5% STATE	88.5% FEDERAL 11.5% STATE	88.5% FEDERAL 11.5% STATE	88.5% FEDERAL 11.5% STATE	88.5% FEDERAL 5.75% STATE 5.75% MOLINE	88.5% FEDERAL 11.5% STATE	88.5% FEDERAL 11.5% STATE	88.5% FEDERAL 11.5% STATE	88.5% FEDERAL 11.5% STATE	88.5% FEDERAL 11.5% STATE	88.5% FEDERAL 11.5% STATE	100% MOLINE	50% IOWA 50% ILLINOIS
				ROADWAY	ROADWAY	S.N. 081-0177	S.N. 081-0178	S.N. 081-0186	S.N. 081-0187	SAFETY	SAFETY	S.N. 081-6010	S.N. 081-6011	S.N. 081-6012	S.N. 081-6018	S.N. 081-6019	STRUCTURE	UTILITIES	OTHER
				0003	0004	0010	0010	0011	0011	0021	0021	0004	0004	0004	0004	0004	0004	0043	0044
				URBAN	URBAN	URBAN	URBAN	URBAN	URBAN	URBAN	URBAN	URBAN	URBAN	URBAN	URBAN	URBAN	URBAN	URBAN	URBAN
60219510	MANHOLES, TYPE A, 4'-DIAMETER, TYPE 20 FRAME AND GRATE	EACH	26	9	17														
60221000	MANHOLES, TYPE A, 5'-DIAMETER, TYPE 1 FRAME, OPEN LID	EACH	1		1														
60221100	MANHOLES, TYPE A, 5'-DIAMETER, TYPE 1 FRAME, CLOSED LID	EACH	4	2	2	4													
60221700	MANHOLES, TYPE A, 5'-DIAMETER, TYPE 8 GRATE	EACH	5	5	4														
60221800	MANHOLES, TYPE A, 5'-DIAMETER, TYPE 9 FRAME AND GRATE	EACH	6	5	1														
60222210	MANHOLES, TYPE A, 5'-DIAMETER, TYPE 20 FRAME AND GRATE	EACH	3	2	1														
60223800	MANHOLES, TYPE A, 6'-DIAMETER, TYPE 1 FRAME, CLOSED LID	EACH	8	6	2														
60224005	MANHOLES, TYPE A, 6'-DIAMETER, TYPE 8 GRATE	EACH	5	5															
60224020	MANHOLES, TYPE A, 6'-DIAMETER, TYPE 11 FRAME AND GRATE	EACH	1		1														
60224035	MANHOLES, TYPE A, 6'-DIAMETER, TYPE 20 FRAME AND GRATE	EACH	2	1	1														
60224446	MANHOLES, TYPE A, 7'-DIAMETER, TYPE 1 FRAME, CLOSED LID	EACH	12	8	4	4													
60224459	MANHOLES, TYPE A, 8'-DIAMETER, TYPE 1 FRAME, CLOSED LID	EACH	2	2															
60224469	~~MANHOLES, TYPE A, 9'-DIAMETER, TYPE 1 FRAME, CLOSED LID~~	~~EACH~~	~~1~~	~~1~~		4													
60240210	INLETS, TYPE B, TYPE 1 FRAME, OPEN LID	EACH	3	1	2														

* SPECIALTY ITEM

benesch
engineers · scientists · planners
Alfred Benesch & Company
205 North Michigan Avenue, Suite 2400
Chicago, Illinois 60601
312-565-0450 Job No. 10061

FILE NAME = ...\500_AB_Plan_Turn_In.dgn	USER NAME = $USER$	DESIGNED - DTS	REVISED -
		CHECKED - MRC	REVISED -
MODEL: $MODEL	PLOT SCALE =	DRAWN - DTS	REVISED -
	PLOT DATE = 3/9/2017	CHECKED - MRC	REVISED -

STATE OF ILLINOIS
DEPARTMENT OF TRANSPORTATION

SUMMARY OF QUANTITIES

SHEET NO. 12 OF 33 SHEETS

F.A.I. RTE.	SECTION	COUNTY	TOTAL SHEETS	SHEET NO.
74	(81-1)R & 81-1)VBR	ROCK ISLAND	1504	20
		CONTRACT NO. 64C08		
FED. ROAD DIST. NO. 7	ILLINOIS	FED. AID PROJECT		

500_AB_Plan_Turn_In.dgn 11:14:24 AM 3/9/2017

REV 6-8-17

CODE NO.	ITEM	UNIT	TOTAL QUANTITY	88.5% FEDERAL 11.5% STATE ROADWAY 0003 URBAN	88.5% FEDERAL 11.5% STATE ROADWAY 0004 URBAN	88.5% FEDERAL 11.5% STATE S.N. 081-0177 0010 URBAN	88.5% FEDERAL 11.5% STATE S.N. 081-0178 0010 URBAN	88.5% FEDERAL 11.5% STATE S.N. 081-0186 0011 URBAN	88.5% FEDERAL 11.5% STATE S.N. 081-0187 0011 URBAN	88.5% FEDERAL 11.5% STATE SAFETY 0021 URBAN	88.5% FEDERAL 5.75% STATE 5.75% MOLINE SAFETY 0021 URBAN	88.5% FEDERAL 11.5% STATE S.N. 081-6010 0004 URBAN	88.5% FEDERAL 11.5% STATE S.N. 081-6011 0004 URBAN	88.5% FEDERAL 11.5% STATE S.N. 081-6012 0004 URBAN	88.5% FEDERAL 11.5% STATE S.N. 081-6018 0004 URBAN	88.5% FEDERAL 11.5% STATE S.N. 081-6019 0004 URBAN	88.5% FEDERAL 11.5% STATE STRUCTURE 0004 URBAN	100% MOLINE UTILITIES 0043 URBAN	50% IOWA 50% ILLINOIS OTHER 0044 URBAN
60240301	INLETS, TYPE B, TYPE 8 GRATE	EACH	6	6															
60240303	INLETS, TYPE B, TYPE 9 FRAME AND GRATE	EACH	1	1															
60240310	INLETS, TYPE B, TYPE 11 FRAME AND GRATE	EACH	6		6														
60240324	INLETS, TYPE B, TYPE 20 FRAME AND GRATE	EACH	44	10	34														
60255500	MANHOLES TO BE ADJUSTED	EACH	20		20														
60256910	MANHOLES TO BE ADJUSTED WITH NEW TYPE 20 FRAME AND GRATE	EACH	8	6	2														
60257900	MANHOLES TO BE RECONSTRUCTED	EACH	2	1	1														
60260100	INLETS TO BE ADJUSTED	EACH	13		13														
60265700	VALVE VAULTS TO BE ADJUSTED	EACH	7		7														
60270050	DRAINAGE STRUCTURES, TYPE 4 WITH TWO TYPE 20 FRAME AND GRATES	EACH	5	5															
60500040	REMOVING MANHOLES	EACH	59	18	41														
60500050	REMOVING INLETS	EACH	48	4	44														
60600095	CLASS SI CONCRETE (OUTLET)	CU YD	1.3		1.3														
60600605	CONCRETE CURB, TYPE B	FOOT	60.0		60.0														

M

* SPECIALTY ITEM

benesch engineers · scientists · planners
Alfred Benesch & Company
205 North Michigan Avenue, Suite 2400
Chicago, Illinois 60601
312-565-0450 Job No. 10061

FILE NAME = ...\500_A8_Plan_Turn_In.dgn
MODEL: *MODEL
USER NAME = $USER$
PLOT SCALE =
PLOT DATE = 3/9/2017
DESIGNED - DTS
CHECKED - MRC
DRAWN - DTS
CHECKED - MRC
REVISED -
REVISED -
REVISED -
REVISED -

STATE OF ILLINOIS
DEPARTMENT OF TRANSPORTATION

SUMMARY OF QUANTITIES

SHEET NO. 13 OF 33 SHEETS

F.A.I. RTE.	SECTION	COUNTY	TOTAL SHEETS	SHEET NO.
74	(81-1)R & (81-1)HVBR	ROCK ISLAND	1504	21

CONTRACT NO. 64C08

FED. ROAD DIST. NO. 7 | ILLINOIS | FED. AID PROJECT

500_A8_Plan_Turn_In.dgn 11:14:33 AM 3/9/2017

4 REV 6-8-17

CODE NO.	ITEM	UNIT	TOTAL QUANTITY	88.5% FEDERAL 11.5% STATE ROADWAY 0003 URBAN	88.5% FEDERAL 11.5% STATE ROADWAY 0004 URBAN	88.5% FEDERAL 11.5% STATE S.N. 081-0177 0010 URBAN	88.5% FEDERAL 11.5% STATE S.N. 081-0178 0010 URBAN	88.5% FEDERAL 11.5% STATE S.N. 081-0186 0011 URBAN	88.5% FEDERAL 11.5% STATE S.N. 081-0187 0011 URBAN	88.5% FEDERAL 11.5% STATE SAFETY 0021 URBAN	88.5% FEDERAL 5.75% STATE 5.75% MOLINE SAFETY 0021 URBAN	88.5% FEDERAL 11.5% STATE S.N. 081-6010 0004 URBAN	88.5% FEDERAL 11.5% STATE S.N. 081-6011 0004 URBAN	88.5% FEDERAL 11.5% STATE S.N. 081-6012 0004 URBAN	88.5% FEDERAL 11.5% STATE S.N. 081-6018 0004 URBAN	88.5% FEDERAL 11.5% STATE S.N. 081-6019 0004 URBAN	88.5% FEDERAL 11.5% STATE STRUCTURE 0004 URBAN	100% MOLINE UTILITIES 0043 URBAN	50% IOWA 50% ILLINOIS OTHER 0044 URBAN
63700275	CONCRETE BARRIER, DOUBLE FACE, 42 INCH HEIGHT	FOOT	80							80									
63700900	CONCRETE BARRIER BASE	FOOT	179							179									
64200116	SHOULDER RUMBLE STRIPS, 16 INCH	FOOT	1233							1233									
64300260	IMPACT ATTENUATORS (FULLY REDIRECTIVE, NARROW), TEST LEVEL 3	EACH	1							1									
64301090	ATTENUATOR BASE	SQ YD	14							14									
66900105	UNDERGROUND STORAGE TANK REMOVAL	EACH	1		1														
66400105	CHAIN LINK FENCE, 4'	FOOT	2640	2640															
66900200	NON-SPECIAL WASTE DISPOSAL	CU YD	88,000		88,000														
66700305	PERMANENT SURVEY MARKERS, TYPE II	EACH	2	2															
66900400	SPECIAL WASTE GROUNDWATER DISPOSAL	GAL	95,000		95,000	4													
*	~~66900205 SPECIAL WASTE DISPOSAL~~	~~CU YD~~	~~775~~		~~775~~														
66900450	SPECIAL WASTE PLANS AND REPORTS	L SUM	1		1														
67000400	ENGINEER'S FIELD OFFICE, TYPE A	CAL MO	47	47															
66900530	SOIL DISPOSAL ANALYSIS	EACH	36		36														
67100100	MOBILIZATION	L SUM	1	1															
66901000	BACKFILL PLUGS	CU YD	110		110														
70100420	TRAFFIC CONTROL AND PROTECTION, STANDARD 701411	EACH	1		1														
70100800	TRAFFIC CONTROL AND PROTECTION, STANDARD 701401	LSUM	1		1														
70100815	TRAFFIC CONTROL AND PROTECTION, STANDARD 701446	LSUM	1		1														
70100820	TRAFFIC CONTROL AND PROTECTION, STANDARD 701451	LSUM	1		1														

* SPECIALTY ITEM

benesch
engineers - scientists - planners
Alfred Benesch & Company
205 North Michigan Avenue, Suite 2400
Chicago, Illinois 60601
312-565-0450 Job No. 10061

FILE NAME = ...\SOD_AB_Plan_Turn_In.dgn	USER NAME = $USER$	DESIGNED - DTS	REVISED -
		CHECKED - MRC	REVISED -
MODEL: $MODEL	PLOT SCALE =	DRAWN - DTS	REVISED -
	PLOT DATE = 3/9/2017	CHECKED - MRC	REVISED -

STATE OF ILLINOIS
DEPARTMENT OF TRANSPORTATION

SUMMARY OF QUANTITIES

SHEET NO. 15 OF 33 SHEETS

F.A.I. RTE.	SECTION	COUNTY	TOTAL SHEETS	SHEET NO.
74	(81-1)R & 81-1HVBR	ROCK ISLAND	1504	23
		CONTRACT NO. 64C08		
FED. ROAD DIST. NO. 7	ILLINOIS	FED. AID PROJECT		

SOD_AB_Plan_Turn_In.dgn 11:14:51 AM 3/9/2017

4 REV 6-8-17

CODE NO.	ITEM	UNIT	TOTAL QUANTITY	CONSTRUCTION CODE															
				88.5% FEDERAL 11.5% STATE	88.5% FEDERAL 11.5% STATE	88.5% FEDERAL 11.5% STATE	88.5% FEDERAL 11.5% STATE	88.5% FEDERAL 11.5% STATE	88.5% FEDERAL 11.5% STATE	88.5% FEDERAL 11.5% STATE	88.5% FEDERAL 5.75% STATE 5.75% MOLINE	88.5% FEDERAL 11.5% STATE	88.5% FEDERAL 11.5% STATE	88.5% FEDERAL 11.5% STATE	88.5% FEDERAL 11.5% STATE	88.5% FEDERAL 11.5% STATE	88.5% FEDERAL 11.5% STATE	100% MOLINE	50% IOWA 50% ILLINOIS
				ROADWAY	ROADWAY	S.N. 081-0177	S.N. 081-0178	S.N. 081-0186	S.N. 081-0187	SAFETY	SAFETY	S.N. 081-6010	S.N. 081-6011	S.N. 081-6012	S.N. 081-6016	S.N. 081-6019	STRUCTURE	UTILITIES	OTHER
				0003	0004	0010	0010	0011	0011	0021	0021	0004	0004	0004	0004	0004	0004	0043	0044
				URBAN	URBAN	URBAN	URBAN	URBAN	URBAN	URBAN	URBAN	URBAN	URBAN	URBAN	URBAN	URBAN	URBAN	URBAN	URBAN
70100825	TRAFFIC CONTROL AND PROTECTION, STANDARD 701456	L SUM	1		1														
70102625	TRAFFIC CONTROL AND PROTECTION, STANDARD 701606	L SUM	1		1														
70102630	TRAFFIC CONTROL AND PROTECTION, STANDARD 701601	L SUM	1		1														
70102635	TRAFFIC CONTROL AND PROTECTION, STANDARD 701701	L SUM	1		1														
70102640	TRAFFIC CONTROL AND PROTECTION, STANDARD 701801	L SUM	1		1														
70103815	TRAFFIC CONTROL SURVEILLANCE	CAL DA	117		117														
~~70100800~~	~~CHANGEABLE MESSAGE SIGN~~	~~CAL MO~~	~~23~~		~~23~~														
X701500S	CHANGEABLE MESSAGE SIGN	CAL DA	708		708														
70200100	NIGHTTIME WORK ZONE LIGHTING	L SUM	1	1															
70300100	SHORT TERM PAVEMENT MARKING	FOOT	3875		3875														
70300150	SHORT TERM PAVEMENT MARKING REMOVAL	SQ FT	388		388														
70300210	TEMPORARY PAVEMENT MARKING LETTERS AND SYMBOLS	SQ FT	1498								1498								
70300220	TEMPORARY PAVEMENT MARKING - LINE 4"	FOOT	154519								154519								
70300240	TEMPORARY PAVEMENT MARKING - LINE 6"	FOOT	5212								5212								
70300250	TEMPORARY PAVEMENT MARKING - LINE 8"	FOOT	3243								3243								

14

* SPECIALTY ITEM

benesch
engineers · scientists · planners
Alfred Benesch & Company
205 North Michigan Avenue, Suite 2400
Chicago, Illinois 60601
312-565-0450 Job No. 10061

FILE NAME = ...\500_AB_Plan_Turn_Index	USER NAME = $USER$	DESIGNED - DTS	REVISED -
		CHECKED - MRC	REVISED -
MODEL: $MODEL	PLOT SCALE =	DRAWN - DTS	REVISED -
	PLOT DATE = 3/9/2017	CHECKED - MRC	REVISED -

STATE OF ILLINOIS
DEPARTMENT OF TRANSPORTATION

SUMMARY OF QUANTITIES

SHEET NO. 16 OF 33 SHEETS

F.A.I. RTE.	SECTION	COUNTY	TOTAL SHEETS	SHEET NO.
74	(B1-1)R & B1-1)HVBR	ROCK ISLAND	1504	24
		CONTRACT NO. 64C08		
FED. ROAD DIST. NO. 7	ILLINOIS	FED. AID PROJECT		

500_AB_Plan_Turn_Index.dgn 11:15:00 AM 3/9/2017

REV 6-8-17

CODE NO.	ITEM	UNIT	TOTAL QUANTITY	CONSTRUCTION CODE															
				88.5% FEDERAL 11.5% STATE	88.5% FEDERAL 11.5% STATE	88.5% FEDERAL 11.5% STATE	88.5% FEDERAL 11.5% STATE	88.5% FEDERAL 11.5% STATE	88.5% FEDERAL 11.5% STATE	88.5% FEDERAL 11.5% STATE	88.5% FEDERAL 5.75% STATE 5.75% MOLINE	88.5% FEDERAL 11.5% STATE	88.5% FEDERAL 11.5% STATE	88.5% FEDERAL 11.5% STATE	88.5% FEDERAL 11.5% STATE	88.5% FEDERAL 11.5% STATE	88.5% FEDERAL 11.5% STATE	100% MOLINE	50% IOWA 50% ILLINOIS
				ROADWAY	ROADWAY	S.N. 081-0177	S.N. 081-0178	S.N. 081-0186	S.N. 081-0187	SAFETY	SAFETY	S.N. 081-6010	S.N. 081-6011	S.N. 081-6012	S.N. 081-6018	S.N. 081-6019	STRUCTURE	UTILITIES	OTHER
				0003	0004	0010	0010	0011	0011	0021	0021	0004	0004	0004	0004	0004	0004	0043	0044
				URBAN	URBAN	URBAN	URBAN	URBAN	URBAN	URBAN	URBAN	URBAN	URBAN	URBAN	URBAN	URBAN	URBAN	URBAN	URBAN
70300280	TEMPORARY PAVEMENT MARKING - LINE 24"	FOOT	1091							1091									
70400100	TEMPORARY CONCRETE BARRIER	FOOT	3,050.0							3,050.0									
70400200	RELOCATE TEMPORARY CONCRETE BARRIER	FOOT	1,087.5							1,087.5									
70600241	IMPACT ATTENUATORS, TEMPORARY (NON- REDIRECTIVE, NARROW), TEST LEVEL 2	EACH	3							3									
70600260	IMPACT ATTENUATORS, TEMPORARY (FULLY REDIRECTIVE, NARROW), TEST LEVEL 3	EACH	2							2									
70600270	IMPACT ATTENUATORS, TEMPORARY (FULLY REDIRECTIVE, WIDE), TEST LEVEL 3	EACH	1							1									
70600332	IMPACT ATTENUATORS, RELOCATE (FULLY REDIRECTIVE, NARROW), TEST LEVEL 3	EACH	1							1									
* 72000100	SIGN PANEL - TYPE 1	SQ FT	652							652									
* 72000200	SIGN PANEL - TYPE 2	SQ FT	260							260									
* 72000300	SIGN PANEL - TYPE 3	SQ FT	1877							1877									
* 72400100	REMOVE SIGN PANEL ASSEMBLY - TYPE A	EACH	58							58									
* 72400200	REMOVE SIGN PANEL ASSEMBLY - TYPE B	EACH	10							10									
* 72400310	REMOVE SIGN PANEL - TYPE 1	SQ FT	33							33									
* 72400320	REMOVE SIGN PANEL - TYPE 2	SQ FT	58							58									

14

* SPECIALTY ITEM

benesch
engineers · scientists · planners
Alfred Benesch & Company
205 North Michigan Avenue, Suite 2400
Chicago, Illinois 60601
312-565-0450 Job No. 10061

FILE NAME = ...\SOO_AB_Plan_Turn_In.dgn
MODEL: $MODEL

USER NAME = $USER$
PLOT SCALE =
PLOT DATE = 3/9/2017

DESIGNED - DTS
CHECKED - MRC
DRAWN - DTS
CHECKED - MRC

REVISED -
REVISED -
REVISED -
REVISED -

STATE OF ILLINOIS
DEPARTMENT OF TRANSPORTATION

SUMMARY OF QUANTITIES

SHEET NO. 17 OF 33 SHEETS

F.A.I. RTE.	SECTION	COUNTY	TOTAL SHEETS	SHEET NO.
74	(81-1)R & 81-1)VBR	ROCK ISLAND	1504	25
		CONTRACT NO. 64C08		
FED. ROAD DIST. NO. 7	ILLINOIS	FED. AID PROJECT		

SOO_AB_Plan_Turn_In.dgn
11:15:09 AM
3/9/2017

REV 6-8-17

CODE NO.	ITEM	UNIT	TOTAL QUANTITY	88.5% FEDERAL 11.5% STATE ROADWAY 0003 URBAN	88.5% FEDERAL 11.5% STATE ROADWAY 0004 URBAN	88.5% FEDERAL 11.5% STATE S.N. 081-0177 0010 URBAN	88.5% FEDERAL 11.5% STATE S.N. 081-0178 0010 URBAN	88.5% FEDERAL 11.5% STATE S.N. 081-0186 0011 URBAN	88.5% FEDERAL 11.5% STATE S.N. 081-0187 0011 URBAN	88.5% FEDERAL 11.5% STATE SAFETY 0021 URBAN	88.5% FEDERAL 5.75% STATE 5.75% MOLINE SAFETY 0021 URBAN	88.5% FEDERAL 11.5% STATE S.N. 081-6010 0004 URBAN	88.5% FEDERAL 11.5% STATE S.N. 081-6011 0004 URBAN	88.5% FEDERAL 11.5% STATE S.N. 081-6012 0004 URBAN	88.5% FEDERAL 11.5% STATE S.N. 081-6018 0004 URBAN	88.5% FEDERAL 11.5% STATE S.N. 081-6019 0004 URBAN	88.5% FEDERAL 11.5% STATE STRUCTURE 0004 URBAN	100% MOLINE UTILITIES 0043 URBAN	50% IOWA 50% ILLINOIS OTHER 0044 URBAN
				CONSTRUCTION CODE															
72400330	REMOVE SIGN PANEL - TYPE 3	SQ FT	168							168									
72400500	RELOCATE SIGN PANEL ASSEMBLY - TYPE A	EACH	2							2									
72501000	TERMINAL MARKER - DIRECT APPLIED	EACH	4							4									
72600100	MILE POST MARKER ASSEMBLY	EACH	2							2									
72700100	STRUCTURAL STEEL SIGN SUPPORT - BREAKAWAY	POUND	1275							1275									
72800100	TELESCOPING STEEL SIGN SUPPORT	FOOT	606							606									
* 73000100	WOOD SIGN SUPPORT	FOOT	241							241									
* 73100100	BASE FOR TELESCOPING STEEL SIGN SUPPORT	EACH	10							10									
* 73300100	OVERHEAD SIGN STRUCTURE - SPAN, TYPE I.A (4'-0" X 4'-6")	FOOT	159														159		
* 73300200	OVERHEAD SIGN STRUCTURE - SPAN, TYPE II.A (4'-6" X 5'-3")	FOOT	248														248		
* 73302170	OVERHEAD SIGN STRUCTURE - CANTILEVER, TYPE II.C-A (36" X 5'-6")	FOOT	30														30		
* 73304000	OVERHEAD SIGN STRUCTURE - BRIDGE MOUNTED	FOOT	30.5														30.5		
* 73400100	CONCRETE FOUNDATIONS	CU YD	2.8							2.8									
* 73400200	DRILLED SHAFT CONCRETE FOUNDATIONS	CU YD	125														125		

14

* SPECIALTY ITEM

benesch engineers · scientists · planners
Alfred Benesch & Company
205 North Michigan Avenue, Suite 2400
Chicago, Illinois 60601
312-565-0450 Job No. 10061

FILE NAME = ...\500_AB_Plan_Turn_In.dgn
MODEL: $MODEL
USER NAME = $USER4
PLOT SCALE =
PLOT DATE = 3/9/2017
DESIGNED - DTS
CHECKED - MRC
DRAWN - DTS
CHECKED - MRC
REVISED -
REVISED -
REVISED -
REVISED -

STATE OF ILLINOIS
DEPARTMENT OF TRANSPORTATION

SUMMARY OF QUANTITIES

SHEET NO. 18 OF 33 SHEETS

F.A.I. RTE.	SECTION	COUNTY	TOTAL SHEETS	SHEET NO.
74	(81-1)R & 81-1HVBR	ROCK ISLAND	1504	26
		CONTRACT NO. 64C08		
FED. ROAD DIST. NO. 7	ILLINOIS	FED. AID PROJECT		

500_AB_Plan_Turn_In.dgn
11:15:18 AM
3/9/2017

REV 6-8-17

CODE NO.	ITEM	UNIT	TOTAL QUANTITY	CONSTRUCTION CODE															
				88.5% FEDERAL 11.5% STATE	88.5% FEDERAL 11.5% STATE	88.5% FEDERAL 11.5% STATE	88.5% FEDERAL 11.5% STATE	88.5% FEDERAL 11.5% STATE	88.5% FEDERAL 11.5% STATE	88.5% FEDERAL 11.5% STATE	88.5% FEDERAL 5.75% STATE 5.75% MOLINE	88.5% FEDERAL 11.5% STATE	88.5% FEDERAL 11.5% STATE	88.5% FEDERAL 11.5% STATE	88.5% FEDERAL 11.5% STATE	88.5% FEDERAL 11.5% STATE	88.5% FEDERAL 11.5% STATE	100% MOLINE	50% IOWA 50% ILLINOIS
				ROADWAY	ROADWAY	S.N. 081-0177	S.N. 081-0178	S.N. 081-0186	S.N. 081-0187	SAFETY	SAFETY	S.N. 081-6010	S.N. 081-6011	S.N. 081-6012	S.N. 081-6018	S.N. 081-6019	STRUCTURE	UTILITIES	OTHER
				0003	0004	0010	0010	0011	0011	0021	0021	0004	0004	0004	0004	0004	0004	0043	0044
				URBAN	URBAN	URBAN	URBAN	URBAN	URBAN	URBAN	URBAN	URBAN	URBAN	URBAN	URBAN	URBAN	URBAN	URBAN	URBAN
78300200	RAISED REFLECTIVE PAVEMENT MARKER REMOVAL	EACH	22							22									
80400100	ELECTRIC SERVICE INSTALLATION	EACH	1															1	
80500100	SERVICE INSTALLATION, TYPE A	EACH	3							3									
80500300	SERVICE INSTALLATION, TYPE C	EACH	1							1									
81028190	UNDERGROUND CONDUIT, GALVANIZED STEEL, 1 1/2" DIA.	FOOT	38							38									
81028320	UNDERGROUND CONDUIT, PVC, 1" DIA.	FOOT	86							86									
81028350	UNDERGROUND CONDUIT, PVC, 2" DIA.	FOOT	8108							6917	150							1041	
81028360	UNDERGROUND CONDUIT, PVC, 2 1/2" DIA.	FOOT	1132							1132									
81028370	UNDERGROUND CONDUIT, PVC, 3" DIA.	FOOT	218							178	40								
81028390	UNDERGROUND CONDUIT, PVC, 4" DIA.	FOOT	1625							1329	296								
81028750	UNDERGROUND CONDUIT, COILABLE NONMETALLIC CONDUIT, 2" DIA.	FOOT	5885							5885									
81100300	CONDUIT ATTACHED TO STRUCTURE, 1" DIA., GALVANIZED STEEL	FOOT	2292							2292									
81100600	CONDUIT ATTACHED TO STRUCTURE, 2" DIA., GALVANIZED STEEL	FOOT	3845							3845									
81100605	CONDUIT ATTACHED TO STRUCTURE, 2" DIA., PVC COATED GALVANIZED STEEL	FOOT	40							40									

* SPECIALTY ITEM

benesch engineers · scientists · planners
Alfred Benesch & Company
205 North Michigan Avenue, Suite 2400
Chicago, Illinois 60601
312-565-0450 Job No. 10061

FILE NAME = ...500_AB_Plan_Turn_Indgn	USER NAME = $USER$	DESIGNED - DTS	REVISED -
		CHECKED - MRC	REVISED -
MODEL = $MODEL	PLOT SCALE =	DRAWN - DTS	REVISED -
	PLOT DATE = 3/9/2017	CHECKED - MRC	REVISED -

STATE OF ILLINOIS
DEPARTMENT OF TRANSPORTATION

SUMMARY OF QUANTITIES

SHEET NO. 20 OF 33 SHEETS

F.A.I. RTE.	SECTION	COUNTY	TOTAL SHEETS	SHEET NO.
74	(81-1)R & 81-1HVBR	ROCK ISLAND	1504	28
		CONTRACT NO. 64C08		
FED. ROAD DIST. NO. 7	ILLINOIS	FED. AID PROJECT		

S00_AB_Plan_Turn_Indgn
11:15:37 AM
3/9/2017

REV 6-8-17

CODE NO.	ITEM	UNIT	TOTAL QUANTITY	CONSTRUCTION CODE															
				88.5% FEDERAL 11.5% STATE	88.5% FEDERAL 11.5% STATE	88.5% FEDERAL 11.5% STATE	88.5% FEDERAL 11.5% STATE	88.5% FEDERAL 11.5% STATE	88.5% FEDERAL 11.5% STATE	88.5% FEDERAL 11.5% STATE	88.5% FEDERAL 5.75% STATE 5.75% MOLINE	88.5% FEDERAL 11.5% STATE	88.5% FEDERAL 11.5% STATE	88.5% FEDERAL 11.5% STATE	88.5% FEDERAL 11.5% STATE	88.5% FEDERAL 11.5% STATE	88.5% FEDERAL 11.5% STATE	100% MOLINE	50% IOWA 50% ILLINOIS
				ROADWAY	ROADWAY	S.N. 081-0177	S.N. 081-0178	S.N. 081-0186	S.N. 081-0187	SAFETY	SAFETY	S.N. 081-6010	S.N. 081-6011	S.N. 081-6012	S.N. 081-6018	S.N. 081-6019	STRUCTURE	UTILITIES	OTHER
				0003	0004	0010	0010	0011	0011	0021	0021	0004	0004	0004	0004	0004	0004	0043	0044
				URBAN	URBAN	URBAN	URBAN	URBAN	URBAN	URBAN	URBAN	URBAN	URBAN	URBAN	URBAN	URBAN	URBAN	URBAN	URBAN
* 81200210	CONDUIT EMBEDDED IN STRUCTURE, 1" DIA., PVC	FOOT	2646							2646									
* 81200230	CONDUIT EMBEDDED IN STRUCTURE, 2" DIA., PVC	FOOT	8351							8351									
* 81300220	JUNCTION BOX, STAINLESS STEEL, ATTACHED TO STRUCTURE, 6" X 6" X 4"	EACH	90							90									
* 81300530	JUNCTION BOX, STAINLESS STEEL, ATTACHED TO STRUCTURE, 12" X 10" X 6"	EACH	51							51									
* 81300550	JUNCTION BOX, STAINLESS STEEL, ATTACHED TO STRUCTURE, 12" X 12" X 6"	EACH	6							6									
* 81301290	JUNCTION BOX, STAINLESS STEEL, EMBEDDED IN STRUCTURE, 12" X 12" X 6"	EACH	4							4									
* 81301500	JUNCTION BOX, STAINLESS STEEL, EMBEDDED IN STRUCTURE, 28" X 12" X 6"	EACH	1							1									
* 81400100	HANDHOLE	EACH	40 A							35 A	2							3	
* 81400300	DOUBLE HANDHOLE	EACH	4							4									
* 81702100	ELECTRIC CABLE IN CONDUIT, 600V (XLP-TYPE USE) 1/C NO. 12	FOOT	2710							2710									
* 81702110	ELECTRIC CABLE IN CONDUIT, 600V (XLP-TYPE USE) 1/C NO. 10	FOOT	6497							6497									
* 81702120	ELECTRIC CABLE IN CONDUIT, 600V (XLP-TYPE USE) 1/C NO. 8	FOOT	76,875							48,900								27,975	
* 81702130	ELECTRIC CABLE IN CONDUIT, 600V (XLP-TYPE USE) 1/C NO. 6	FOOT	22,605							22,605									
* 81702140	ELECTRIC CABLE IN CONDUIT, 600V (XLP-TYPE USE) 1/C NO. 4	FOOT	1990							1990									

* SPECIALTY ITEM

benesch
engineers - scientists - planners
Alfred Benesch & Company
205 North Michigan Avenue, Suite 2400
Chicago, Illinois 60601
312-565-0450 Job No. 10061

FILE NAME = ...\S00_AB_Plan_Turn_In.dgn	USER NAME = #USER#	DESIGNED - DTS	REVISED -
		CHECKED - MRC	REVISED -
MODEL: #MODEL	PLOT SCALE =	DRAWN - DTS	REVISED -
	PLOT DATE = 3/9/2017	CHECKED - MRC	REVISED -

STATE OF ILLINOIS
DEPARTMENT OF TRANSPORTATION

SUMMARY OF QUANTITIES

SHEET NO. 21 OF 33 SHEETS

F.A.I. RTE.	SECTION	COUNTY	TOTAL SHEETS	SHEET NO.
74	(81-1)R & 81-1HVBR	ROCK ISLAND	1504	29
		CONTRACT NO. 64C08		
FED. ROAD DIST. NO. 7	ILLINOIS	FED. AID PROJECT		

S00_AB_Plan_Turn_In.dgn 11:15:47 AM 3/9/2017

A REV 6-8-17

CODE NO.	ITEM	UNIT	TOTAL QUANTITY	88.5% FEDERAL 11.5% STATE ROADWAY 0003 URBAN	88.5% FEDERAL 11.5% STATE ROADWAY 0004 URBAN	88.5% FEDERAL 11.5% STATE S.N. 081-0177 0010 URBAN	88.5% FEDERAL 11.5% STATE S.N. 081-0178 0010 URBAN	88.5% FEDERAL 11.5% STATE S.N. 081-0186 0011 URBAN	88.5% FEDERAL 11.5% STATE S.N. 081-0187 0011 URBAN	88.5% FEDERAL 11.5% STATE SAFETY 0021 URBAN	88.5% FEDERAL 5.75% STATE 5.75% MOLINE SAFETY 0021 URBAN	88.5% FEDERAL 11.5% STATE S.N. 081-6010 0004 URBAN	88.5% FEDERAL 11.5% STATE S.N. 081-6011 0004 URBAN	88.5% FEDERAL 11.5% STATE S.N. 081-6012 0004 URBAN	88.5% FEDERAL 11.5% STATE S.N. 081-6018 0004 URBAN	88.5% FEDERAL 11.5% STATE S.N. 081-6019 0004 URBAN	88.5% FEDERAL 11.5% STATE STRUCTURE 0004 URBAN	100% MOLINE UTILITIES 0043 URBAN	50% IOWA 50% ILLINOIS OTHER 0044 URBAN
X9700019	TUBULAR MARKER MAINTENANCE	EACH	15							15									
Z0025505	PROPERTY MARKERS	EACH	9	9															
Z0028415	GEOTECHNICAL REINFORCEMENT	SQ YD	52240	8185	44055														
Z0030850	TEMPORARY INFORMATION SIGNING	SQ FT	208							208									
52200500	MECHANICALLY STABILIZED EARTH RETAINING WALL	SQ FT	21,192									5612	1517	5791	2853	5419			
Z0034806	MODULAR EXPANSION JOINT-SWIVEL 6"	FOOT	34.0				34.0												
Z0046304	PIPE UNDERDRAIN FOR STRUCTURES 4"	FOOT	203.0			97.0	106.0												
Z0048665	RAILROAD PROTECTIVE LIABILITY INSURANCE	L SUM	1							1									
Z0049801	REMOVAL AND DISPOSAL OF FRIABLE ASBESTOS, BUILDING NO. 1	L SUM	1	1															
Z0049802	REMOVAL AND DISPOSAL OF FRIABLE ASBESTOS, BUILDING NO. 2	L SUM	1	1															
Z0049901	REMOVAL AND DISPOSAL OF NON-FRIABLE ASBESTOS, BUILDING NO. 1	L SUM	1	1															
Z0049902	REMOVAL AND DISPOSAL OF NON-FRIABLE ASBESTOS, BUILDING NO. 2	L SUM	1	1															
* Z0054400	ROCK FILL	CU YD	1,960	10	285							243	825			597			
* Z0054500	ROCK FILL	TON	69,040	35,501	33,539														

* SPECIALTY ITEM

benesch
engineers · scientists · planners

Alfred Benesch & Company
205 North Michigan Avenue, Suite 2400
Chicago, Illinois 60601
312-565-0450 Job No. 10061

FILE NAME = ...\500_AB_Plan_Turn_In.dgn	USER NAME = $USER$	DESIGNED - DTS	REVISED -
		CHECKED - MRC	REVISED -
MODEL: $MODEL	PLOT SCALE =	DRAWN - DTS	REVISED -
	PLOT DATE = 3/9/2017	CHECKED - MRC	REVISED -

STATE OF ILLINOIS
DEPARTMENT OF TRANSPORTATION

SUMMARY OF QUANTITIES

SHEET NO. 27 OF 33 SHEETS

F.A.I. RTE.	SECTION	COUNTY	TOTAL SHEETS	SHEET NO.
74	(81-1)R & (81-1)HVBR	ROCK ISLAND	1504	35
		CONTRACT NO. 64C08		
FED. ROAD DIST. NO. 7	ILLINOIS	FED. AID PROJECT		

500_AB_Plan_Turn_In.dgn 11:16:45 AM 3/9/2017

A REV 6-8-17

CODE NO.	ITEM	UNIT	TOTAL QUANTITY	88.5% FEDERAL 11.5% STATE ROADWAY 0003 URBAN	88.5% FEDERAL 11.5% STATE ROADWAY 0004 URBAN	88.5% FEDERAL 11.5% STATE S.N. 081-0177 0010 URBAN	88.5% FEDERAL 11.5% STATE S.N. 081-0178 0010 URBAN	88.5% FEDERAL 11.5% STATE S.N. 081-0186 0011 URBAN	88.5% FEDERAL 11.5% STATE S.N. 081-0187 0011 URBAN	88.5% FEDERAL 11.5% STATE SAFETY 0021 URBAN	88.5% FEDERAL 5.75% STATE 5.75% MOLINE SAFETY 0021 URBAN	88.5% FEDERAL 11.5% STATE S.N. 081-6010 0004 URBAN	88.5% FEDERAL 11.5% STATE S.N. 081-6011 0004 URBAN	88.5% FEDERAL 11.5% STATE S.N. 081-6012 0004 URBAN	88.5% FEDERAL 11.5% STATE S.N. 081-6018 0004 URBAN	88.5% FEDERAL 11.5% STATE S.N. 081-6019 0004 URBAN	88.5% FEDERAL 11.5% STATE STRUCTURE 0004 URBAN	100% MOLINE UTILITIES 0043 URBAN	50% IOWA 50% ILLINOIS OTHER 0044 URBAN
Z0056608	STORM SEWER (WATER MAIN REQUIREMENTS) 12 INCH	FOOT	100		100														
Z0056612	STORM SEWER (WATER MAIN REQUIREMENTS) 18 INCH	FOOT	50		50														
Z0056610	STORM SEWER (WATER MAIN REQUIREMENTS) 15 INCH	FOOT	51		51														
Z0056616	STORM SEWER (WATER MAIN REQUIREMENTS) 24 INCH	FOOT	50		50														
Z0056626	STORM SEWER (WATER MAIN REQUIREMENTS) 48 INCH	FOOT	94	94															
Z0056624	STORM SEWER (WATER MAIN REQUIREMENTS) 42 INCH	FOOT	50		50														
Z0062456	TEMPORARY PAVEMENT	SQ YD	8356		8356														
Z0073510	TEMPORARY TRAFFIC SIGNAL TIMING	EACH	6							6									
X0301852	DEWATERING STRUCTURE NO. 1	EACH	1	1															
X0301853	DEWATERING STRUCTURE NO. 2	EACH	1	1															
X0320050	CONSTRUCTION LAYOUT (SPECIAL)	LSUM	1	1															
X0322281	WIDE AREA VIDEO DETECTION SYSTEM COMPLETE	EACH	6							4	2								
X0322352	SEEDING MOBILIZATION	EACH	2	2															
X0322936	REMOVE EXISTING FLARED END SECTION	EACH	1														1		
X0325206	RELOCATE INTERCONNECT CABLE	FOOT	163								163								
X0325482	REMOVE EXISTING ITS EQUIPMENT	EACH	11							11									
X0326263	EQUIPMENT CABINET	EACH	2							2									

* SPECIALTY ITEM

benesch engineers · scientists · planners
Alfred Benesch & Company
205 North Michigan Avenue, Suite 2400
Chicago, Illinois 60601
312-565-0450 Job No. 10061

FILE NAME = ...\500_A8_Plan_Turn_In.dgn
MODEL: $MODEL
USER NAME = $USER$
PLOT SCALE =
PLOT DATE = 3/9/2017
DESIGNED - DTS
CHECKED - MRC
DRAWN - DTS
CHECKED - MRC
REVISED -
REVISED -
REVISED -
REVISED -

STATE OF ILLINOIS
DEPARTMENT OF TRANSPORTATION

SUMMARY OF QUANTITIES

SHEET NO. 28 OF 33 SHEETS

F.A.I. RTE.	SECTION	COUNTY	TOTAL SHEETS	SHEET NO.
74	(81-1)R & 81-1HVBR	ROCK ISLAND	1504	36

CONTRACT NO. 64C08

FED. ROAD DIST. NO. 7 | ILLINOIS | FED. AID PROJECT

3/9/2017 11:16:54 AM 500_A8_Plan_Turn_In.dgn

A REV 6-8-17

CODE NO.	ITEM	UNIT	TOTAL QUANTITY	88.5% FEDERAL 11.5% STATE ROADWAY 0003 URBAN	88.5% FEDERAL 11.5% STATE ROADWAY 0004 URBAN	88.5% FEDERAL 11.5% STATE S.N. 081-0177 0010 URBAN	88.5% FEDERAL 11.5% STATE S.N. 081-0178 0010 URBAN	88.5% FEDERAL 11.5% STATE S.N. 081-0166 0011 URBAN	88.5% FEDERAL 11.5% STATE S.N. 081-0167 0011 URBAN	88.5% FEDERAL 11.5% STATE SAFETY 0021 URBAN	88.5% FEDERAL 5.75% STATE 5.75% MOLINE SAFETY 0021 URBAN	88.5% FEDERAL 11.5% STATE S.N. 081-6010 0004 URBAN	88.5% FEDERAL 11.5% STATE S.N. 081-6011 0004 URBAN	88.5% FEDERAL 11.5% STATE S.N. 081-6012 0004 URBAN	88.5% FEDERAL 11.5% STATE S.N. 081-6018 0004 URBAN	88.5% FEDERAL 11.5% STATE S.N. 081-6019 0004 URBAN	88.5% FEDERAL 11.5% STATE STRUCTURE 0004 URBAN	100% MOLINE UTILITIES 0043 URBAN	50% IOWA 50% ILLINOIS OTHER 0044 URBAN
X0326357	ROADWAY LIGHTING MODIFICATIONS	L SUM	1															1	
X0326382	CONCRETE BARRIER BASE (SPECIAL)	FOOT	1284	309	975														
X0326694	PLUG EXISTING STORM SEWERS	CU YD	8		8														
X0327006	ROADWAY LIGHT POLE, INSTALL ONLY	EACH	41							41									
X0327008	REMOVE AND RELOCATE SIGN (SPECIAL)	EACH	1							1									
X0327070	REMOVE EXISTING FLAGPOLE	EACH	3		3														
X0327139	AGGREGATE COLUMN GROUND IMPROVEMENT	L SUM	1											0.57		0.43			
X0327727	PLANTER REMOVAL	L SUM	1		1														
X0327980	PAVEMENT MARKING REMOVAL - WATER BLASTING	SQ FT	38,415							38,415									
X0839900	SANITARY SEWER REMOVAL 6"	FOOT	105	105															
~~X0931400~~	~~INLET BOXES TO BE ADJUSTED (SPECIAL)~~	~~EACH~~	~~2~~		~~2~~														
60269415	INLETS TO BE RECONSTRUCTED WITH NEW STANDARD 542546 FRAME AND GRATES	EACH	1		1														
X1400126	REMOVE AND REPLACE EXISTING CIRCUIT BREAKER WITH 40AMP, 2-POLE	EACH	2							2									
X2503110	MOWING (SPECIAL)	ACRE	7.00	7.00															
X4400110	TEMPORARY PAVEMENT REMOVAL	SQ YD	5065		5065														

* SPECIALTY ITEM

☐ NON-PART. (100 % STATE)

REV 6-8-17

benesch engineers · scientists · planners

Alfred Benesch & Company
205 North Michigan Avenue, Suite 2400
Chicago, Illinois 60601
312-565-0450 Job No. 10061

FILE NAME = ...SOD_48_Plan_Turn_In.dgn
MODEL: $MODEL
USER NAME = $USER$
PLOT SCALE =
PLOT DATE = 3/9/2017
DESIGNED - DTS
CHECKED - MRC
DRAWN - DTS
CHECKED - MRC
REVISED -
REVISED -
REVISED -
REVISED -

STATE OF ILLINOIS
DEPARTMENT OF TRANSPORTATION

SUMMARY OF QUANTITIES

SHEET NO. 29 OF 33 SHEETS

F.A.I. RTE.	SECTION	COUNTY	TOTAL SHEETS	SHEET NO.
74	(81-1)R & 81-1)VBR	ROCK ISLAND	1504	37
		CONTRACT NO. 64C08		
FED. ROAD DIST. NO. 7	ILLINOIS	FED. AID PROJECT		

SOD_48_Plan_Turn_In.dgn 11:17:03 AM 3/9/2017

CODE NO.	ITEM	UNIT	TOTAL QUANTITY	CONSTRUCTION CODE															
				88.5% FEDERAL 11.5% STATE	88.5% FEDERAL 11.5% STATE	88.5% FEDERAL 11.5% STATE	88.5% FEDERAL 11.5% STATE	88.5% FEDERAL 11.5% STATE	88.5% FEDERAL 11.5% STATE	88.5% FEDERAL 11.5% STATE	88.5% FEDERAL 5.75% STATE 5.75% MOLINE	88.5% FEDERAL 11.5% STATE	88.5% FEDERAL 11.5% STATE	88.5% FEDERAL 11.5% STATE	88.5% FEDERAL 11.5% STATE	88.5% FEDERAL 11.5% STATE	88.5% FEDERAL 11.5% STATE	100% MOLINE	50% IOWA 50% ILLINOIS
				ROADWAY	ROADWAY	S.N. 081-0177	S.N. 081-0178	S.N. 081-0186	S.N. 081-0187	SAFETY	SAFETY	S.N. 081-6010	S.N. 081-6011	S.N. 081-6012	S.N. 081-6018	S.N. 081-6019	STRUCTURE	UTILITIES	OTHER
				0003	0004	0010	0010	0011	0011	0021	0021	0004	0004	0004	0004	0004	0004	0043	0044
				URBAN	URBAN	URBAN	URBAN	URBAN	URBAN	URBAN	URBAN	URBAN	URBAN	URBAN	URBAN	URBAN	URBAN	URBAN	URBAN
X4402805	ISLAND REMOVAL	SQ FT	12,418		12,418														
X5210130	HIGH LOAD MULTI-ROTATIONAL BEARINGS, GUIDED EXPANSION, 300K	EACH	32			11	13	8											
X5210170	HIGH LOAD MULTI-ROTATIONAL BEARINGS, GUIDED EXPANSION, 500K	EACH	31			14	17												
X5210190	HIGH LOAD MULTI-ROTATIONAL BEARINGS, GUIDED EXPANSION, 600K	EACH	20			7	9		4										
X5210350	HIGH LOAD MULTI-ROTATIONAL BEARINGS, FIXED - 600K	EACH	20			7	9		4										
X5210355	HIGH LOAD MULTI-ROTATIONAL BEARINGS, FIXED - 650K	EACH	29			7	22												
X5210360	HIGH LOAD MULTI-ROTATIONAL BEARINGS, FIXED - 700K	EACH	26			18	8												
X5210365	HIGH LOAD MULTI-ROTATIONAL BEARINGS, FIXED - 750K	EACH	4					4											
X5509900	ABANDON AND FILL EXISTING STORM SEWER	FOOT	205														205		
X5620122	WATER SERVICE REMOVAL	EACH	2	2															
X5860110	GRANULAR BACKFILL FOR STRUCTURES	CU YD	540			254	266		20										
* X6029000	JUNCTION BOX	LSUM	1	1															
* X6029001	JUNCTION BOX, NUMBER 1	LSUM	1	1															
* X6029002	JUNCTION BOX, NUMBER 2	LSUM	1	1															

* SPECIALTY ITEM

benesch engineers · scientists · planners
Alfred Benesch & Company
205 North Michigan Avenue, Suite 2400
Chicago, Illinois 60601
312-565-0450 Job No. 10061

FILE NAME = ...\500_AB_Plan_Turn_Ind.dgn
MODEL: $MODEL
USER NAME = $USER$
PLOT SCALE =
PLOT DATE = 3/9/2017
DESIGNED - DTS
CHECKED - MRC
DRAWN - DTS
CHECKED - MRC
REVISED -
REVISED -
REVISED -
REVISED -

STATE OF ILLINOIS
DEPARTMENT OF TRANSPORTATION

SUMMARY OF QUANTITIES

SHEET NO. 30 OF 33 SHEETS

F.A.I. RTE.	SECTION	COUNTY	TOTAL SHEETS	SHEET NO.
74	(81-1)R & 81-1HVBR	ROCK ISLAND	1504	38

CONTRACT NO. 64C08

FED. ROAD DIST. NO. 7 | ILLINOIS | FED. AID PROJECT

500_AB_Plan_Turn_Ind.dgn
11:17:13 AM
3/9/2017

Δ REV 6-8-17

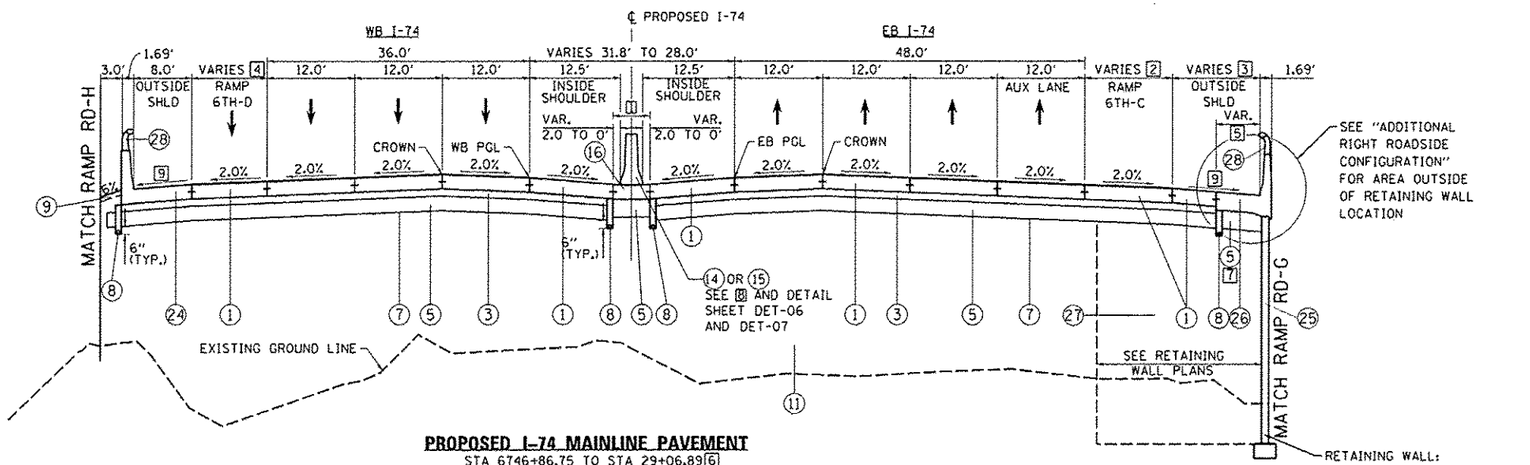

PROPOSED I-74 MAINLINE PAVEMENT
STA 6746+86.75 TO STA 29+06.89 6

BRIDGE LIMITS (NOT REPRESENTED BY TYPICAL)
STA 29+36.89 TO STA 48+73.41
(BRIDGE APPROACH SLAB STA 6747+16.75 TO STA 6746+86.75)
(BRIDGE APPROACH SLAB STA 29+06.89 TO 29+36.89 - ON SKEW)
(BRIDGE APPROACH SLAB STA 48+73.41 TO 49+03.54 - ON SKEW)

STATION EQUATION
STA 6745+67.06 BK (IA) =
STA 25+35.00 AH (IL)

1 MEDIAN BARRIER BASE WIDTH
STA 6746+86.75 TO 27+23.63 = 10.80' TO 7.16'
STA 27+23.63 TO 28+05.28 = 3.16' TO 3.00'
STA 28+05.28 TO 28+92.62 = 3.00'
STA 28+92.62 TO 29+06.79 = 3.00' TO 4.40'

2 RAMP LANE WIDTH TAPER
STA 26+84.48 TO 29+27.96 6 = 1.0' STUB TO 14.0'

3 SHOULDER WIDTH
STA 6746+86.75 TO 26+65.69 = 12.0'
STA 26+65.69 TO 27+40.83 = 12.0' TO 8.0'
STA 27+40.83 TO 29+27.96 6 = 8.0'

4 RAMP LANE WIDTH
STA 6746+86.75 TO 28+87.89 = 8.1' TO 18.5'

5 ANCHOR SLAB WIDTH
STA 25+75.00 TO 27+40.83 = 6.0'
STA 27+40.83 TO 29+27.96 6 = 8.0'

6 APPROACH SLABS FOR BRIDGE STRUCTURES 081-0177 AND 081-0178 ARE ON A SKEW. END STATION OF TYPICAL SECTION IS TAKEN AT THE INTERSECTING POINT OF THE MAINLINE CENTERLINE. PROPOSED ITEMS ALONG I-74 EASTBOUND HAVE LIMITS BEYOND THE TYPICAL SECTION STATION DUE TO SKEW.

7 AGGREGATE SUBGRADE IMPROVEMENT 13 1/2" PLACED BETWEEN RETAINING WALL ANCHOR SLABS AND SELECT BACKFILL.

8 MEDIAN TYPE
STA 6746+86.75 TO 28+07.25 = 15
STA 28+07.25 TO 28+12.75 = LIGHT POLE FOUNDATION, SPECIAL
STA 28+12.75 TO 28+92.62 = 14
STA 28+92.62 TO 29+06.79 = 15

9 SEE SHOULDER TRANSITION DETAIL SHEET FOR SLOPE.

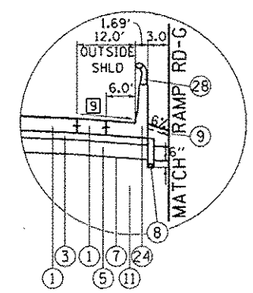

ADDITIONAL RIGHT ROADSIDE CONFIGURATION
STA 6746+86.75 TO STA 25+75.00

INTERSTATE 74
STRUCTURAL DESIGN TRAFFIC: YEAR 2027
PV = 82.671 SU = 4,342 MU = 3,437
ROAD/STREET CLASSIFICATION: INTERSTATE CLASS: I
PERCENT OF STRUCTURAL DESIGN TRAFFIC IN DESIGN LANE:
P = 8% S = 37% M = 37%
TRAFFIC FACTOR: ACTUAL TF = 22.35 AC TYPE = N/A
MINIMUM TF = 8.26
PG GRADE: BINDER = N/A SURFACE = N/A
SUBGRADE SUPPORT RATING:
SSR = IBR = 3 (POOR)

PROPOSED LEGEND:

1. PORTLAND CEMENT CONCRETE PAVEMENT 10 1/2" (JOINTED)
2. PORTLAND CEMENT CONCRETE PAVEMENT 9 1/4" (JOINTED)
3. STABILIZED SUBBASE 4"
4. BITUMINOUS MATERIALS (TACK COAT)
5. AGGREGATE SUBGRADE IMPROVEMENT 13 1/2"
6. AGGREGATE SUBGRADE IMPROVEMENT 12"
7. GEOTECHNICAL REINFORCEMENT
8. PIPE UNDERDRAINS, TYPE 2, 6"
9. TOPSOIL FURNISH AND PLACE, 4"
10. EROSION CONTROL BLANKET (SEE NOTE 8)
11. EMBANKMENT
12. AGGREGATE SHOULDERS, TYPE A 6"
13. CONCRETE BARRIER, SINGLE FACE, 42 INCH HEIGHT (SPECIAL)
14. CONCRETE BARRIER, DOUBLE FACE, 42 INCH HEIGHT
15. CONCRETE BARRIER TRANSITION (SPECIAL)
16. CONCRETE BARRIER BASE OR CONCRETE BARRIER BASE (SPECIAL)
17. STEEL PLATE BEAM GUARDRAIL, TYPE A, 6 FOOT POSTS
18. HOT-MIX ASPHALT SHOULDERS, 3" (FOR STABILIZATION AT SPBGR)
19. SUBBASE GRANULAR MATERIAL, TYPE A 9"
20. 1½" HOT-MIX ASPHALT SURFACE COURSE, MIX "C", N70
21. 2½" HOT-MIX ASPHALT BINDER COURSE, IL-19.0, N70
22. AGGREGATE BASE COURSE, TYPE A 6"
23. GEOTECHNICAL FABRIC FOR GROUND STABILIZATION
24. ANCHORAGE SLAB (SEE ANCHORAGE SLAB PLANS)
25. RETAINING WALL (SEE RETAINING WALL PLANS)
26. ANCHORAGE SLAB (SEE RETAINING WALL PLANS)
27. SELECT BACKFILL (SEE RETAINING WALL PLANS)
28. STEEL RAILING (SPECIAL) (SEE STRUCTURAL PLANS)
29. CONCRETE GUTTER, TYPE A (SPECIAL)
30. COMBINATION CONCRETE CURB AND GUTTER, TYPE B-6.24
31. COMBINATION CONCRETE CURB AND GUTTER, TYPE B-6.12
32. COMBINATION CONCRETE CURB AND GUTTER, TYPE M-6.24
33. COMBINATION CONCRETE CURB AND GUTTER, TYPE M-6.12
34. CONCRETE MEDIAN, TYPE SM (SPECIAL)
35. CONCRETE MEDIAN SURFACE, 4 INCH
36. CONCRETE MEDIAN, TYPE SM-6.18
37. CORRUGATED MEDIAN
38. 1½" POLYMERIZED HOT-MIX ASPHALT SURFACE COURSE, MIX "F", N50
39. 1" POLYMERIZED LEVELING BINDER (MACHINE METHOD), N50
40. 2½" HOT MIX ASPHALT SURFACE COURSE, MIX "C", N50
41. POLYMERIZED BITUMINOUS MATERIALS (TACK COAT)
42. PORTLAND CEMENT CONCRETE SIDEWALK 5 INCH
43. SEGMENTAL CONCRETE BLOCK WALL
44. PORTLAND CEMENT CONCRETE DRIVEWAY PAVEMENT, 7 INCH
45. CHAIN LINK FENCE, 4'
46. CONCRETE MEDIAN, TYPE SB (SPECIAL)
47. CONCRETE MEDIAN, TYPE SM-6.12

NOTES:

1. SEE ROADWAY PLANS FOR PAVEMENT WIDTH TRANSITION LOCATIONS.
2. SEE DRAINAGE PLANS FOR LOCATIONS OF PIPE UNDERDRAINS AND DRAINAGE STRUCTURES.
3. SEE PAVEMENT GORE DETAILS FOR LAYOUT AND SLOPE INFORMATION.
4. SEE CROSS SECTIONS FOR SIDE SLOPE AND DITCH DETAILS.
5. SEE RETAINING WALL PLANS FOR LOCATION AND DETAILS.
6. THE UNIT WEIGHT TO CALCULATE ALL HOT MIX ASPHALT SURFACE MIXTURES IS 112 LBS/SQ YD/IN FOR MIX C AND 123 LBS/SQ YD/IN FOR MIX F. APPLICATION RATE FOR TACK COAT IS 0.05 LB/SQ FT.
7. SEE JOINTING PLANS FOR TYPE AND LOCATIONS.
8. EROSION CONTROL BLANKET IS TO BE PLACED AS NEEDED ON SLOPES 1:3 AND FLATTER (TURF REINFORCEMENT ON STEEPER THAN 1:3) AND SHALL NOT BE PLACED ON FURROWED SLOPES. SEE EROSION AND SEDIMENT CONTROL SHEETS FOR LOCATIONS.
9. FOR SUPERELEVATION TRANSITIONS, SEE DETAIL SHEETS FOR MAINLINE OR PROFILE SHEETS FOR RAMPS AND LOCAL ROADS.
10. IF CURB AND GUTTER OR PCC PAVEMENT IS CONSTRUCTED AFTER OCTOBER 15TH AND THE ROAD WILL BE OPEN TO TRAFFIC PRIOR TO THE FOLLOWING APRIL 15TH, PROTECTIVE COAT SHALL BE USED.

TYP-05

LAYOUT	CBP	10/2/2014
DRAWN	MTH	10/2/2014
REVIEWED	AAP/KMA	10/2/2015

FILE NAME = D2CONAB-HPS-sht-typical07M.dgn	USER NAME = peske00994	DESIGNED - CBP	REVISED - ⚠ 05/16/17
		DRAWN - MTH	REVISED -
	PLOT SCALE = NA	CHECKED - AAP/KMA	REVISED -
	PLOT DATE = 4/11/2017	DATE - 1/20/2017	REVISED -

STATE OF ILLINOIS
DEPARTMENT OF TRANSPORTATION

TYPICAL SECTIONS
PROPOSED
I-74 MAINLINE

SCALE: NA | SHEET NO. OF SHEETS | STA. TO STA.

F.A.I. RTE.	SECTION	COUNTY	TOTAL SHEETS	SHEET NO.
74	(81-1)R & 81-1HVBR	ROCK ISLAND	1504	46

CONTRACT NO. 64C08

ILLINOIS FED. AID PROJECT

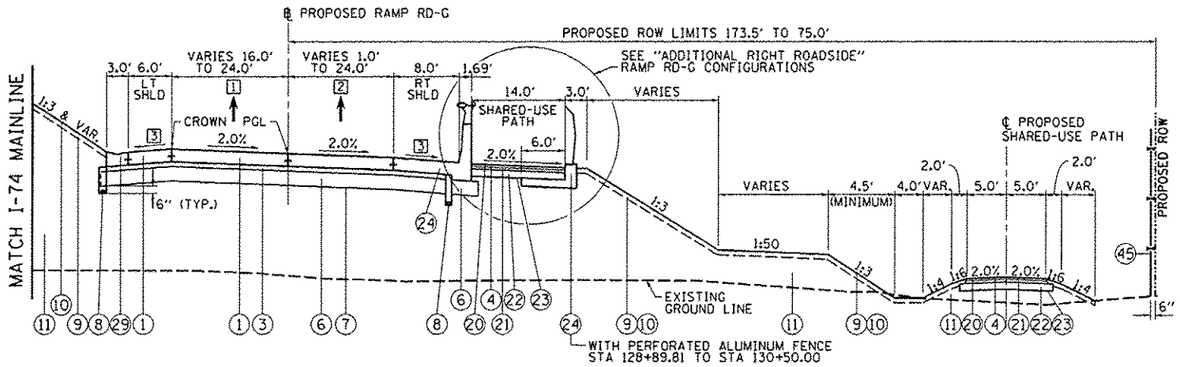

PROPOSED RAMP RD-G PAVEMENT
STA 128+89.81 TO STA 135+26.21

BRIDGE LIMITS (NOT REPRESENTED BY TYPICAL)
STA 120+00.00 TO STA 128+59.81 (ON SKEW)
(BRIDGE APPROACH SLAB FROM
STA 128+59.81 TO 128+89.81)

INTERSECTION LIMITS (NOT REPRESENTED BY TYPICAL)
STA 135+26.21 TO STA 137+09.35
SEE INTERSECTION DETAIL RIVER DRIVE AND RAMP RD-G

1 LEFT LANE(S) WIDTH
STA 128+89.81 TO 132+58.33 = 16.0'
STA 132+58.33 TO 133+78.33 = 16.0' TO 24.0'
STA 133+78.33 TO 135+26.21 = 24.0'

2 RIGHT LANE(S) WIDTH
STA 130+15.00 TO 133+60.00 = 1.0' STUB TO 24.0'
STA 133+60.00 TO 135+26.21 = 24.0'

3 SHOULDER CROSS SLOPE TRANSITIONS TO ACCOMMODATE BRIDGE PLANAR SECTION:
RT SHOULDER: STA 128+91 TO 129+31 -2.0% TO -4.0%
STA 129+31 TO 135+26 -4.0%
LT SHOULDER: STA 128+91 TO 129+81 2.0% TO -4.0%
STA 129+81 TO 135+26 -4.0%

PROPOSED LEGEND:

1. PORTLAND CEMENT CONCRETE PAVEMENT 10 1/2" (JOINTED)
2. PORTLAND CEMENT CONCRETE PAVEMENT 9 1/4" (JOINTED)
3. STABILIZED SUBBASE 4"
4. BITUMINOUS MATERIALS (TACK COAT)
5. AGGREGATE SUBGRADE IMPROVEMENT 13 1/2"
6. AGGREGATE SUBGRADE IMPROVEMENT 12"
7. GEOTECHNICAL REINFORCEMENT
8. PIPE UNDERDRAINS, TYPE 2, 6"
9. TOPSOIL FURNISH AND PLACE, 4"
10. EROSION CONTROL BLANKET (SEE NOTE 8)
11. EMBANKMENT
12. AGGREGATE SHOULDERS, TYPE A 6"
13. CONCRETE BARRIER, SINGLE FACE, 42 INCH HEIGHT (SPECIAL)
14. CONCRETE BARRIER, DOUBLE FACE, 42 INCH HEIGHT
15. CONCRETE BARRIER TRANSITION (SPECIAL)
16. CONCRETE BARRIER BASE OR CONCRETE BARRIER BASE (SPECIAL)
17. STEEL PLATE BEAM GUARDRAIL, TYPE A, 6 FOOT POSTS
18. HOT-MIX ASPHALT SHOULDERS, 3" (FOR STABILIZATION AT SPBGR)
19. SUBBASE GRANULAR MATERIAL, TYPE A 9"
20. 1½" HOT-MIX ASPHALT SURFACE COURSE, MIX "C", N70
21. 2½" HOT-MIX ASPHALT BINDER COURSE, IL-19.0, N70
22. AGGREGATE BASE COURSE, TYPE A 6"
23. GEOTECHNICAL FABRIC FOR GROUND STABILIZATION
24. ANCHORAGE SLAB (SEE ANCHORAGE SLAB PLANS)
25. RETAINING WALL (SEE RETAINING WALL PLANS)
26. ANCHORAGE SLAB (SEE RETAINING WALL PLANS)
27. SELECT BACKFILL (SEE RETAINING WALL PLANS)
28. STEEL RAILING (SPECIAL) (SEE STRUCTURAL PLANS)
29. CONCRETE GUTTER, TYPE A (SPECIAL)
30. COMBINATION CONCRETE CURB AND GUTTER, TYPE B-6.24
31. COMBINATION CONCRETE CURB AND GUTTER, TYPE B-6.12
32. COMBINATION CONCRETE CURB AND GUTTER, TYPE M-6.24
33. COMBINATION CONCRETE CURB AND GUTTER, TYPE M-6.12
34. CONCRETE MEDIAN, TYPE SM (SPECIAL)
35. CONCRETE MEDIAN SURFACE, 4 INCH
36. CONCRETE MEDIAN, TYPE SM-6.18
37. CORRUGATED MEDIAN
38. 1½" POLYMERIZED HOT-MIX ASPHALT SURFACE COURSE, MIX "F", N50
39. 1" POLYMERIZED LEVELING BINDER (MACHINE METHOD), N50
40. 2½" HOT MIX ASPHALT SURFACE COURSE, MIX "C", N50
41. POLYMERIZED BITUMINOUS MATERIALS (TACK COAT)
42. PORTLAND CEMENT CONCRETE SIDEWALK 5 INCH
43. SEGMENTAL CONCRETE BLOCK WALL
44. PORTLAND CEMENT CONCRETE DRIVEWAY PAVEMENT, 7 INCH
45. CHAIN LINK FENCE, 4'
46. CONCRETE MEDIAN, TYPE SB (SPECIAL)
47. CONCRETE MEDIAN, TYPE SM-6.12

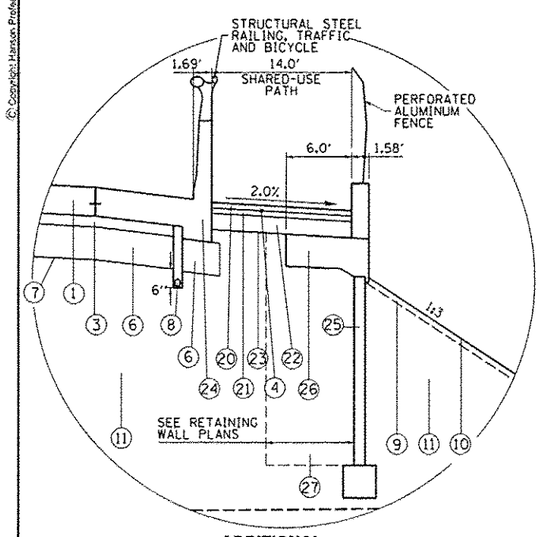

ADDITIONAL RIGHT ROADSIDE 1 RAMP RD-G
STA 130+50.00 TO STA 131+75.00
STA 133+90.00 TO STA 134+50.00

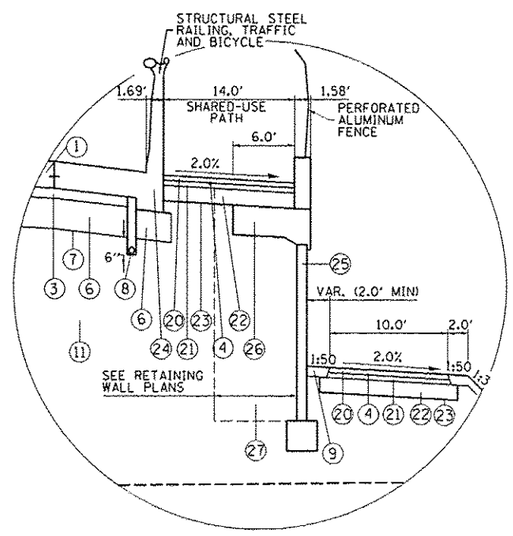

ADDITIONAL RIGHT ROADSIDE 2 RAMP RD-G
STA 131+75.00 TO STA 133+90.00

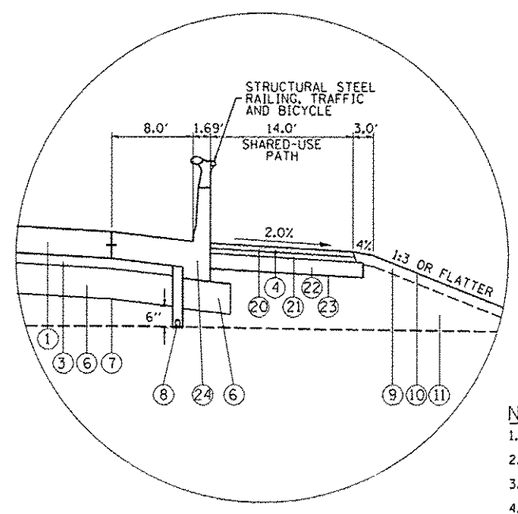

ADDITIONAL RIGHT ROADSIDE 3 RAMP RD-G
STA 134+50.00 TO STA 135+26.21

NOTES:

1. SEE ROADWAY PLANS FOR PAVEMENT WIDTH TRANSITION LOCATIONS.
2. SEE DRAINAGE PLANS FOR LOCATIONS OF PIPE UNDERDRAINS AND DRAINAGE STRUCTURES.
3. SEE PAVEMENT GORE DETAILS FOR LAYOUT AND SLOPE INFORMATION.
4. SEE CROSS SECTIONS FOR SIDE SLOPE AND DITCH DETAILS.
5. SEE RETAINING WALL PLANS FOR LOCATION AND DETAILS.
6. THE UNIT WEIGHT TO CALCULATE ALL HOT MIX ASPHALT SURFACE MIXTURES IS 112 LBS/SQ YD/IN FOR MIX C AND 123 LBS/SQ YD/IN FOR MIX F. APPLICATION RATE FOR TACK COAT IS 0.05 LB/SQ FT.
7. SEE JOINTING PLANS FOR TYPE AND LOCATIONS.
8. EROSION CONTROL BLANKET IS TO BE PLACED AS NEEDED ON SLOPES 1:3 AND FLATTER (TURF REINFORCEMENT ON STEEPER THAN 1:3) AND SHALL NOT BE PLACED ON FURROWED SLOPES. SEE EROSION AND SEDIMENT CONTROL SHEETS FOR LOCATIONS.
9. FOR SUPERELEVATION TRANSITIONS, SEE DETAIL SHEETS FOR MAINLINE OR PROFILE SHEETS FOR RAMPS AND LOCAL ROADS.
10. IF CURB AND GUTTER OR PCC PAVEMENT IS CONSTRUCTED AFTER OCTOBER 15TH AND THE ROAD WILL BE OPEN TO TRAFFIC PRIOR TO THE FOLLOWING APRIL 15TH, PROTECTIVE COAT SHALL BE USED.

TYP-06

LAYOUT	CBP	10/2/2014
DRAWN	MTH	10/2/2014
REVIEWED	AAP/KMA	10/2/2015

FILE NAME = D2CONAB-HPS-sht-typical08M.dgn
USER NAME = peth00954
PLOT SCALE = NA
PLOT DATE = 4/11/2017
DESIGNED - CBP
DRAWN - MTH
CHECKED - AAP/KMA
DATE - 1/20/2017
REVISED - ⚠ 05/16/17
REVISED -
REVISED -
REVISED -

STATE OF ILLINOIS
DEPARTMENT OF TRANSPORTATION

TYPICAL SECTIONS
PROPOSED
RAMP RD-G

SCALE: NA | SHEET NO. OF SHEETS | STA. TO STA.

F.A.I. RTE.	SECTION	COUNTY	TOTAL SHEETS	SHEET NO.
74	(81-1)R & (81-)HVBR	ROCK ISLAND	1504	47

CONTRACT NO. 64C08
ILLINOIS FED. AID PROJECT

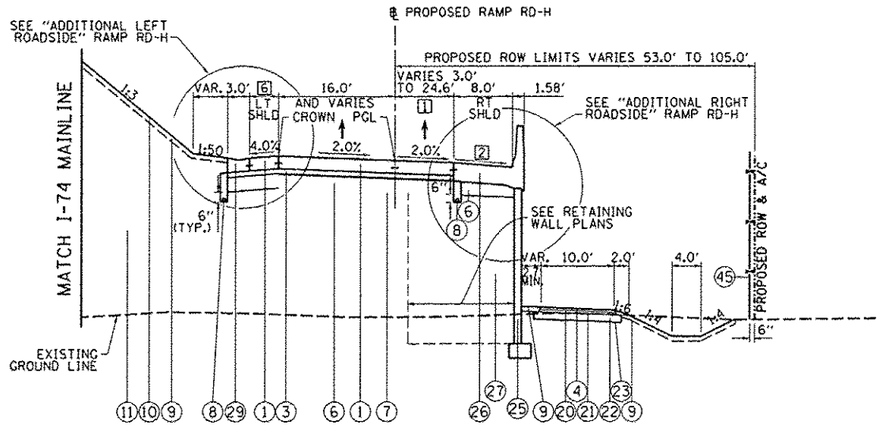

PROPOSED RAMP RD-H PAVEMENT
STA 211+28.45 TO STA 217+28.15 (ON SKEW)

BRIDGE LIMITS (NOT REPRESENTED BY TYPICAL)
STA 217+58.15 TO STA 231+77.55
(BRIDGE APPROACH SLAB FROM
STA 217+28.15 TO 217+58.15)

INTERSECTION LIMITS (NOT REPRESENTED BY TYPICAL)
STA 210+00.00 TO STA 211+28.45
SEE INTERSECTION DETAIL
RIVER DRIVE AND RAMP RD-H

1. PAVEMENT WIDTH
   STA 211+28.45 TO 212+69.37 = 24.6' TO 8.0'
   STA 212+69.37 TO 214+77.55 = 8.0'
   STA 214+77.55 TO 217+28.15 = 8.0' TO 3.0'
2. SHOULDER CROSS SLOPE TRANSITIONS TO ACCOMMODATE BRIDGE PLANAR SECTION:
   RT SHOULDER: STA 211+28.45 TO 216+87 -4.0%
   STA 216+87 TO 217+27 -4.0% TO -2.0%
   LT SHOULDER: STA 211+28.45 TO 216+37 -4.0%
   STA 216+37 TO 217+27 -4.0% TO 2.0%
3. STABILIZED SHOULDER: STA 215+49.70 LT TO 217+15.18 LT CONCRETE CURB TYPE B (SEE STD 631031): STA 217+15.18 TO 217+30.16 (NOT SHOWN ON SECTIONS FOR CLARITY)
4. SHOULDER WIDTH
   STA 211+28.45 TO 212+09.05 = 3.1' TO 8.0'
   STA 212+09.05 TO 217+28.15 = 8.0'
5. STABILIZED SHOULDER: STA 211+63.59 RT TO 212+50.88 RT CONCRETE CURB TYPE B (SEE STD 631031): STA 212+50.88 TO 212+65.90 (NOT SHOWN ON SECTIONS FOR CLARITY)
6. SHOULDER WIDTH
   STA 211+28.45 TO 211+76.56 = 4.3' TO 6.0'
   STA 211+76.56 TO 217+28.15 = 6.0'

PROPOSED LEGEND:

1. PORTLAND CEMENT CONCRETE PAVEMENT 10 1/2" (JOINTED)
2. PORTLAND CEMENT CONCRETE PAVEMENT 9 1/4" (JOINTED)
3. STABILIZED SUBBASE 4"
4. BITUMINOUS MATERIALS (TACK COAT)
5. AGGREGATE SUBGRADE IMPROVEMENT 13 1/2"
6. AGGREGATE SUBGRADE IMPROVEMENT 12"
7. GEOTECHNICAL REINFORCEMENT
8. PIPE UNDERDRAINS, TYPE 2, 6"
9. TOPSOIL FURNISH AND PLACE, 4"
10. EROSION CONTROL BLANKET (SEE NOTE 8)
11. EMBANKMENT
12. AGGREGATE SHOULDERS, TYPE A 6"
13. CONCRETE BARRIER, SINGLE FACE, 42 INCH HEIGHT (SPECIAL)
14. CONCRETE BARRIER, DOUBLE FACE, 42 INCH HEIGHT
15. CONCRETE BARRIER TRANSITION (SPECIAL)
16. CONCRETE BARRIER BASE OR CONCRETE BARRIER BASE (SPECIAL)
17. STEEL PLATE BEAM GUARDRAIL, TYPE A, 6 FOOT POSTS
18. HOT-MIX ASPHALT SHOULDERS, 3" (FOR STABILIZATION AT SPBGR)
19. SUBBASE GRANULAR MATERIAL, TYPE A 9"
20. 1½" HOT-MIX ASPHALT SURFACE COURSE, MIX "C", N70
21. 2½" HOT-MIX ASPHALT BINDER COURSE, IL-19.0, N70
22. AGGREGATE BASE COURSE, TYPE A 6"
23. GEOTECHNICAL FABRIC FOR GROUND STABILIZATION
24. ANCHORAGE SLAB (SEE ANCHORAGE SLAB PLANS)
25. RETAINING WALL (SEE RETAINING WALL PLANS)
26. ANCHORAGE SLAB (SEE RETAINING WALL PLANS)
27. SELECT BACKFILL (SEE RETAINING WALL PLANS)
28. STEEL RAILING (SPECIAL) (SEE STRUCTURAL PLANS)
29. CONCRETE GUTTER, TYPE A (SPECIAL)
30. COMBINATION CONCRETE CURB AND GUTTER, TYPE B-6.24
31. COMBINATION CONCRETE CURB AND GUTTER, TYPE B-6.12
32. COMBINATION CONCRETE CURB AND GUTTER, TYPE M-6.24
33. COMBINATION CONCRETE CURB AND GUTTER, TYPE M-6.12
34. CONCRETE MEDIAN, TYPE SM (SPECIAL)
35. CONCRETE MEDIAN SURFACE, 4 INCH
36. CONCRETE MEDIAN, TYPE SM-6.18
37. CORRUGATED MEDIAN
38. 1½" POLYMERIZED HOT-MIX ASPHALT SURFACE COURSE, MIX "F", N50
39. 1" POLYMERIZED LEVELING BINDER (MACHINE METHOD), N50
40. 2½" HOT MIX ASPHALT SURFACE COURSE, MIX "C", N50
41. POLYMERIZED BITUMINOUS MATERIALS (TACK COAT)
42. PORTLAND CEMENT CONCRETE SIDEWALK 5 INCH
43. SEGMENTAL CONCRETE BLOCK WALL
44. PORTLAND CEMENT CONCRETE DRIVEWAY PAVEMENT, 7 INCH
45. CHAIN LINK FENCE, 4'
46. CONCRETE MEDIAN, TYPE SB (SPECIAL)
47. CONCRETE MEDIAN, TYPE SM-6.12

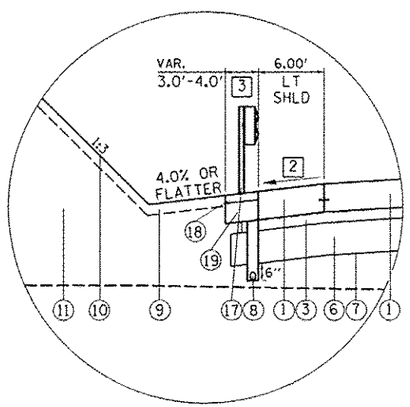

ADDITIONAL LEFT ROADSIDE RAMP RD-H
STA 215+49.70 TO 217+30.16
GUARDRAIL LIMITS
STA 215+74.64 TO STA 217+30.16

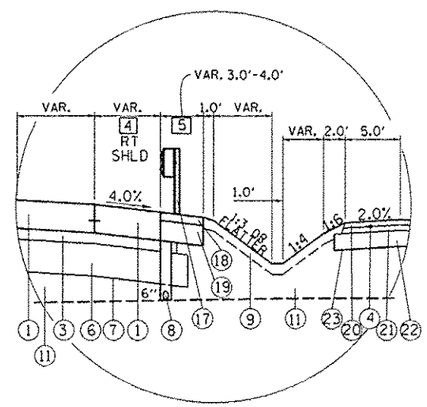

ADDITIONAL RIGHT ROADSIDE RAMP RD-H
STA 211+28.45 TO STA 212+65.90
GUARDRAIL LIMITS
STA 211+73.18 TO 212+65.90

NOTES:

1. SEE ROADWAY PLANS FOR PAVEMENT WIDTH TRANSITION LOCATIONS.
2. SEE DRAINAGE PLANS FOR LOCATIONS OF PIPE UNDERDRAINS AND DRAINAGE STRUCTURES.
3. SEE PAVEMENT GORE DETAILS FOR LAYOUT AND SLOPE INFORMATION.
4. SEE CROSS SECTIONS FOR SIDE SLOPE AND DITCH DETAILS.
5. SEE RETAINING WALL PLANS FOR LOCATION AND DETAILS.
6. THE UNIT WEIGHT TO CALCULATE ALL HOT MIX ASPHALT SURFACE MIXTURES IS 112 LBS/SQ YD/IN FOR MIX C AND 123 LBS/SQ YD/IN FOR MIX F. APPLICATION RATE FOR TACK COAT IS 0.05 LB/SQ FT.
7. SEE JOINTING PLANS FOR TYPE AND LOCATIONS.
8. EROSION CONTROL BLANKET IS TO BE PLACED AS NEEDED ON SLOPES 1:3 AND FLATTER (TURF REINFORCEMENT ON STEEPER THAN 1:3) AND SHALL NOT BE PLACED ON FURROWED SLOPES. SEE EROSION AND SEDIMENT CONTROL SHEETS FOR LOCATIONS.
9. FOR SUPERELEVATION TRANSITIONS, SEE DETAIL SHEETS FOR MAINLINE OR PROFILE SHEETS FOR RAMPS AND LOCAL ROADS.
10. IF CURB AND GUTTER OR PCC PAVEMENT IS CONSTRUCTED AFTER OCTOBER 15TH AND THE ROAD WILL BE OPEN TO TRAFFIC PRIOR TO THE FOLLOWING APRIL 15TH, PROTECTIVE COAT SHALL BE USED.

TYP-07

LAYOUT	CBP	10/2/2014
DRAWN	MTH	10/2/2014
REVIEWED	AAP/KMA	10/2/2015

FILE NAME = D2CONAB-HPS-sht-typical08MA.dgn	USER NAME = peter82954	DESIGNED - CBP	REVISED - 05/16/17
		DRAWN - MTH	REVISED -
	PLOT SCALE = NA	CHECKED - AAP/KMA	REVISED -
	PLOT DATE = 4/11/2017	DATE - 1/20/2017	REVISED -

STATE OF ILLINOIS
DEPARTMENT OF TRANSPORTATION

TYPICAL SECTIONS
PROPOSED
RAMP RD-H

SCALE: NA | SHEET NO. OF SHEETS | STA. TO STA.

F.A.I RTE.	SECTION	COUNTY	TOTAL SHEETS	SHEET NO.
74	(81-1)R & (81-1)HVBR	ROCK ISLAND	1504	48
		CONTRACT NO. 64C08		
		ILLINOIS FED. AID PROJECT		

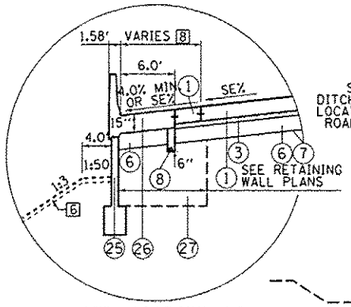

LEFT ROADSIDE AT RETAINING WALL LOCATION
2 STA 331+13.00 TO 331+30.00

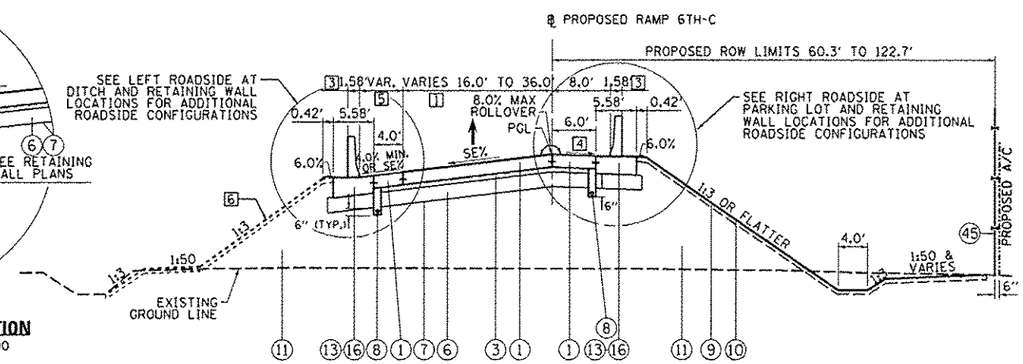

PROPOSED RAMP 6TH-C PAVEMENT
STA 331+13.00 TO STA 337+58.59
(BRIDGE APPROACH SLAB STA 330+83.50 TO STA 331+13.00)

BRIDGE LIMITS (NOT REPRESENTED BY TYPICAL)
STA 322+92.68 TO STA 330+83.50

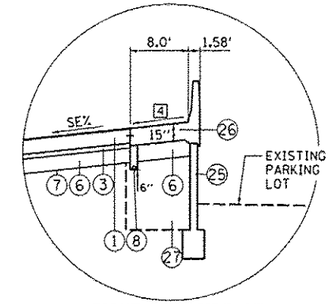

RIGHT ROADSIDE AT PARKING LOT LOCATION
2 STA 331+13.00 TO STA 332+00.00

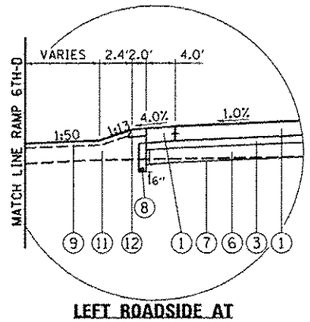

LEFT ROADSIDE AT DITCH LOCATION
STA 336+25.00 TO STA 337+42.06

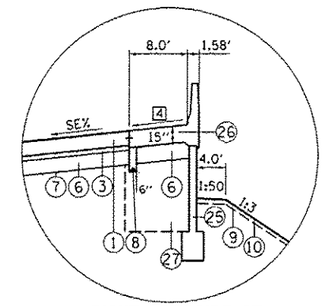

RIGHT ROADSIDE AT RETAINING WALL LOCATIONS
STA 332+00.00 TO STA 332+60.00

RAMP RD-G
STRUCTURAL DESIGN TRAFFIC: YEAR 2025
PV = 12,900 SU = 339 MU = 339
ROAD/STREET CLASSIFICATION: RAMP CLASS: I
PERCENT OF STRUCTURAL DESIGN TRAFFIC IN DESIGN LANE:
P = 100% S = 100% M = 100%
TRAFFIC FACTOR: ACTUAL TF = 5.74 AC TYPE = N/A
MINIMUM TF = 10.05
PG GRADE: BINDER = N/A SURFACE = N/A
SUBGRADE SUPPORT RATING:
SSR = IBR = 3 (POOR)

RAMP RD-H
STRUCTURAL DESIGN TRAFFIC: YEAR 2025
PV = 11,610 SU = 306 MU = 306
ROAD/STREET CLASSIFICATION: RAMP CLASS: I
PERCENT OF STRUCTURAL DESIGN TRAFFIC IN DESIGN LANE:
P = 100% S = 100% M = 100%
TRAFFIC FACTOR: ACTUAL TF = 5.18 AC TYPE = N/A
MINIMUM TF = 10.05
PG GRADE: BINDER = N/A SURFACE = N/A
SUBGRADE SUPPORT RATING:
SSR = IBR = 3 (POOR)

RAMP 6TH-C
STRUCTURAL DESIGN TRAFFIC: YEAR 2025
PV = 7,740 SU = 204 MU = 204
ROAD/STREET CLASSIFICATION: RAMP CLASS: I
PERCENT OF STRUCTURAL DESIGN TRAFFIC IN DESIGN LANE:
P = 100% S = 100% M = 100%
TRAFFIC FACTOR: ACTUAL TF = 3.45 AC TYPE = N/A
MINIMUM TF = 10.05
PG GRADE: BINDER = N/A SURFACE = N/A
SUBGRADE SUPPORT RATING:
SSR = IBR = 3 (POOR)

RAMP 6TH-D
STRUCTURAL DESIGN TRAFFIC: YEAR 2025
PV = 7,740 SU = 204 MU = 204
ROAD/STREET CLASSIFICATION: RAMP CLASS: I
PERCENT OF STRUCTURAL DESIGN TRAFFIC IN DESIGN LANE:
P = 100% S = 100% M = 100%
TRAFFIC FACTOR: ACTUAL TF = 3.45 AC TYPE = N/A
MINIMUM TF = 10.05
PG GRADE: BINDER = N/A SURFACE = N/A
SUBGRADE SUPPORT RATING:
SSR = IBR = 3 (POOR)

1 PAVEMENT WIDTH
STA 331+13.00 TO 333+00.00 = 16.00'
STA 333+00.00 TO 336+49.59 = 16.00' TO 36.00'
STA 336+49.59 TO 337+58.59 = 36.00'

2 RETAINING WALL LIMITS EXTEND BEYOND THE TYPICAL SECTION LIMITS. SEE RETAINING WALL PLANS FOR DETAILS.

3 SINGLE FACE CONCRETE BARRIER, SPECIAL LIMITS
STA 331+30.00 LT TO 336+25.00 LT
STA 332+60.00 RT TO 337+58.59 RT

4 SHOULDER CROSS SLOPE TRANSITIONS TO ACCOMMODATE BRIDGE PLANAR SECTION AND SUPERELEVATION TRANSITIONS:
RT SHOULDER: STA 331+13 TO 332+60 5.34% TO -2.0%
STA 332+60 TO 333+96 -2.0%
STA 333+96 TO 334+74 -2.0% TO -4.0%

5 LEFT SHOULDER WIDTH
STA 331+13.00 TO 331+30.00 = 10.44' TO 11.94'
STA 331+30.00 TO 332+48.90 = 11.94' TO 6.00'
STA 332+48.90 TO 336+25.00 = 6.00'
STA 336+25.00 TO 337+42.06 = 4.00'

6 PLACE MULCH OR MAT TO THE LIMITS SHOWN IN THE SEEDING PLANS. MULCH AND MAT IS PLACED AS TEMPORARY EROSION CONTROL MEASURE IN PREPARATION FOR A 4" ROCK LAYER TO BE PLACED BY OTHERS UNDER SEPARATE LANDSCAPING CONTRACT TO REACH FINAL GRADE ELEVATION SHOWN IN CROSS SECTIONS.

PROPOSED LEGEND:

1. PORTLAND CEMENT CONCRETE PAVEMENT 10 1/2" (JOINTED)
2. PORTLAND CEMENT CONCRETE PAVEMENT 9 1/4" (JOINTED)
3. STABILIZED SUBBASE 4"
4. BITUMINOUS MATERIALS (TACK COAT)
5. AGGREGATE SUBGRADE IMPROVEMENT 13 1/2"
6. AGGREGATE SUBGRADE IMPROVEMENT 12"
7. GEOTECHNICAL REINFORCEMENT
8. PIPE UNDERDRAINS, TYPE 2, 6"
9. TOPSOIL FURNISH AND PLACE, 4"
10. EROSION CONTROL BLANKET (SEE NOTE 8)
11. EMBANKMENT
12. AGGREGATE SHOULDERS, TYPE A 6"
13. CONCRETE BARRIER, SINGLE FACE, 42 INCH HEIGHT (SPECIAL)
14. CONCRETE BARRIER, DOUBLE FACE, 42 INCH HEIGHT
15. CONCRETE BARRIER TRANSITION (SPECIAL)
16. CONCRETE BARRIER BASE OR CONCRETE BARRIER BASE (SPECIAL)
17. STEEL PLATE BEAM GUARDRAIL, TYPE A, 6 FOOT POSTS
18. HOT-MIX ASPHALT SHOULDERS, 3" (FOR STABILIZATION AT SPBGR)
19. SUBBASE GRANULAR MATERIAL, TYPE A 9"
20. 1½" HOT-MIX ASPHALT SURFACE COURSE, MIX "C", N70
21. 2½" HOT-MIX ASPHALT BINDER COURSE, IL-19.0, N70
22. AGGREGATE BASE COURSE, TYPE A 6"
23. GEOTECHNICAL FABRIC FOR GROUND STABILIZATION
24. ANCHORAGE SLAB (SEE ANCHORAGE SLAB PLANS)
25. RETAINING WALL (SEE RETAINING WALL PLANS)
26. ANCHORAGE SLAB (SEE RETAINING WALL PLANS)
27. SELECT BACKFILL (SEE RETAINING WALL PLANS)
28. STEEL RAILING (SPECIAL) (SEE STRUCTURAL PLANS)
29. CONCRETE GUTTER, TYPE A (SPECIAL)
30. COMBINATION CONCRETE CURB AND GUTTER, TYPE B-6.24
31. COMBINATION CONCRETE CURB AND GUTTER, TYPE B-6.12
32. COMBINATION CONCRETE CURB AND GUTTER, TYPE M-6.24
33. COMBINATION CONCRETE CURB AND GUTTER, TYPE M-6.12
34. CONCRETE MEDIAN, TYPE SM (SPECIAL)
35. CONCRETE MEDIAN SURFACE, 4 INCH
36. CONCRETE MEDIAN, TYPE SM-6.18
37. CORRUGATED MEDIAN
38. 1½" POLYMERIZED HOT-MIX ASPHALT SURFACE COURSE, MIX "F", N50
39. 1" POLYMERIZED LEVELING BINDER (MACHINE METHOD), N50
40. 2½" HOT MIX ASPHALT SURFACE COURSE, MIX "C", N50
41. POLYMERIZED BITUMINOUS MATERIALS (TACK COAT)
42. PORTLAND CEMENT CONCRETE SIDEWALK 5 INCH
43. SEGMENTAL CONCRETE BLOCK WALL
44. PORTLAND CEMENT CONCRETE DRIVEWAY PAVEMENT, 7 INCH
45. CHAIN LINK FENCE, 4'
46. CONCRETE MEDIAN, TYPE SB (SPECIAL)
47. CONCRETE MEDIAN, TYPE SM-6.12

NOTES:

1. SEE ROADWAY PLANS FOR PAVEMENT WIDTH TRANSITION LOCATIONS.
2. SEE DRAINAGE PLANS FOR LOCATIONS OF PIPE UNDERDRAINS AND DRAINAGE STRUCTURES.
3. SEE PAVEMENT GORE DETAILS FOR LAYOUT AND SLOPE INFORMATION.
4. SEE CROSS SECTIONS FOR SIDE SLOPE AND DITCH DETAILS.
5. SEE RETAINING WALL PLANS FOR LOCATION AND DETAILS.
6. THE UNIT WEIGHT TO CALCULATE ALL HOT MIX ASPHALT SURFACE MIXTURES IS 112 LBS/SQ YD/IN FOR MIX C AND 123 LBS/SQ YD/IN FOR MIX F. APPLICATION RATE FOR TACK COAT IS 0.05 LB/SQ FT.
7. SEE JOINTING PLANS FOR TYPE AND LOCATIONS.
8. EROSION CONTROL BLANKET IS TO BE PLACED AS NEEDED ON SLOPES 1:3 AND FLATTER (TURF REINFORCEMENT ON STEEPER THAN 1:3) AND SHALL NOT BE PLACED ON FURROWED SLOPES. SEE EROSION AND SEDIMENT CONTROL SHEETS FOR LOCATIONS. △1
9. FOR SUPERELEVATION TRANSITIONS, SEE DETAIL SHEETS FOR MAINLINE OR PROFILE SHEETS FOR RAMPS AND LOCAL ROADS.
10. IF CURB AND GUTTER OR PCC PAVEMENT IS CONSTRUCTED AFTER OCTOBER 15TH AND THE ROAD WILL BE OPEN TO TRAFFIC PRIOR TO THE FOLLOWING APRIL 15TH, PROTECTIVE COAT SHALL BE USED.

TYP-08

LAYOUT	CBP	10/2/2014
DRAWN	MTH	10/2/2014
REVIEWED	AAP/KMA	10/2/2015

FILE NAME = D2CONAB-HPS-sht-typical10M.dgn
USER NAME = petke08954
PLOT SCALE = NA
PLOT DATE = 4/11/2017
DESIGNED - CBP
DRAWN - MTH
CHECKED - AAP/KMA
DATE - 1/20/2017
REVISED - △1 05/16/17
REVISED -
REVISED -
REVISED -

STATE OF ILLINOIS
DEPARTMENT OF TRANSPORTATION

TYPICAL SECTIONS
PROPOSED
RAMP 6TH-C

SCALE: NA | SHEET NO. OF SHEETS | STA. TO STA.

F.A.I RTE.	SECTION	COUNTY	TOTAL SHEETS	SHEET NO.
74	(81-1)R & 81-1)HVBR	ROCK ISLAND	1504	49

CONTRACT NO. 64C08
ILLINOIS FED. AID PROJECT

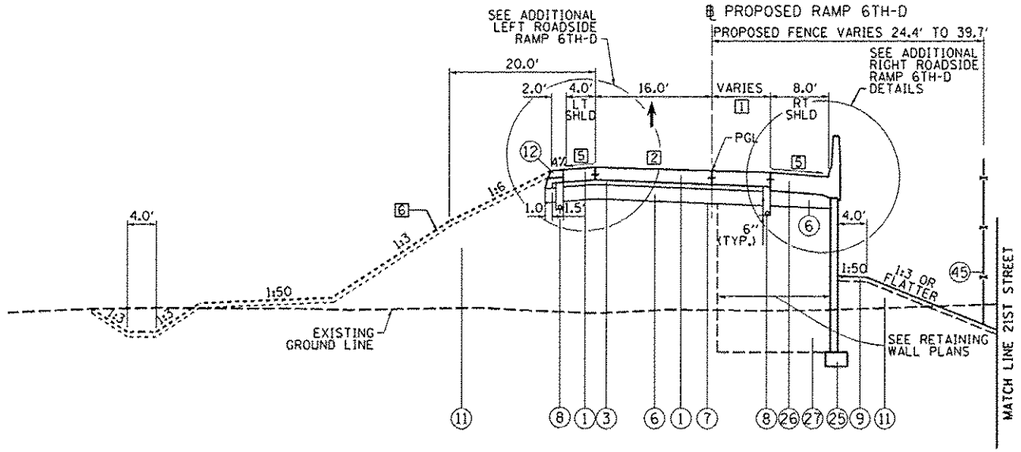

PROPOSED RAMP 6TH-D PAVEMENT
STA 420+58.16 TO STA 425+32.91 (ON SKEW)

BRIDGE LIMITS (NOT REPRESENTED BY TYPICAL)
STA 425+62.39 TO STA 434+46.04
(BRIDGE APPROACH SLABS FROM
STA 425+32.91 TO 425+62.39 AND
STA 434+46.04 TO 434+75.78)

INTERSECTION (NOT REPRESENTED BY TYPICAL)
STA 420+00.00 TO STA. 420+58.16

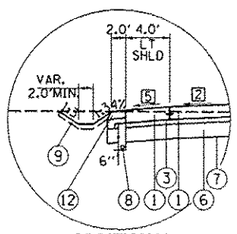

ADDITIONAL LEFT ROADSIDE 1 RAMP 6TH-D
STA 420+58.16 TO STA 421+20.00

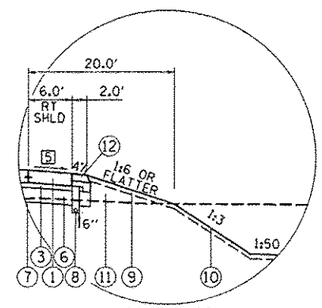

ADDITIONAL RIGHT ROADSIDE 1 RAMP 6TH-D
STA 420+58.16 TO STA 421+68.85

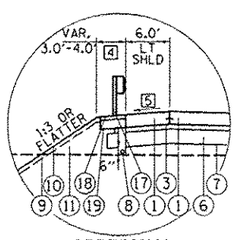

ADDITIONAL LEFT ROADSIDE 2 RAMP 6TH-D
STA 423+63.23 TO STA 425+28.03 (BRIDGE LIMIT ON SKEW)
GUARDRAIL LIMITS
STA 423+72.38 TO STA 425+28.03

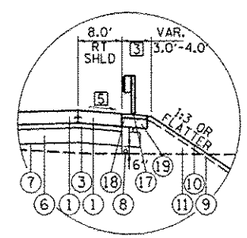

ADDITIONAL RIGHT ROADSIDE 2 RAMP 6TH-D
STA 421+68.85 TO STA 422+75.00
GUARDRAIL LIMITS
STA 421+82.02 TO STA 422+75.00

1. PAVEMENT WIDTH
   STA 420+58.16 TO 421+90.74 = 8.00'
   STA 421+90.74 TO 425+05.74 = 8.00' TO 1.00' STUB
2. PAVEMENT CROSS SLOPE
   STA 420+58.16 TO 420+75.00 = -0.7% TO -1.5%
   STA 420+75.00 TO 421+80.00 = -1.5%
   STA 421+80.00 TO 422+60.00 = -1.5% TO +2.0%
   STA 422+60.00 TO 425+32.91 = +2.0%
3. STABILIZED SHOULDER: STA 421+72.77 RT TO 422+59.98 RT
   TYPE B CURB (SEE STD 631031): STA 422+59.98 RT TO 422+75.00 RT
4. STABILIZED SHOULDER: STA 423+63.23 LT TO 425+13.01 LT
   TYPE B CURB (SEE STD 631031): STA 425+13.01 LT TO 425+28.03 LT
5. SHOULDER CROSS SLOPE TRANSITIONS TO ACCOMMODATE BRIDGE PLANAR SECTION:
   RT SHOULDER: STA 420+58.16 TO 424+87 -4.0%
   STA 424+87 TO 425+27 -4.0% TO -2.0%
   LT SHOULDER: STA 420+58.16 TO 424+37 -4.0%
   STA 424+37 TO 425+27 -4.0% TO 2.0%
6. PLACE MULCH OR MAT TO THE LIMITS SHOWN IN THE SEEDING PLANS. MULCH AND MAT IS PLACED AS TEMPORARY EROSION CONTROL MEASURE IN PREPARATION FOR A 4" ROCK LAYER TO BE PLACED BY OTHERS UNDER SEPARATE LANDSCAPING CONTRACT TO REACH FINAL GRADE ELEVATION SHOWN IN CROSS SECTIONS.

PROPOSED LEGEND:

1. PORTLAND CEMENT CONCRETE PAVEMENT 10 1/2" (JOINTED)
2. PORTLAND CEMENT CONCRETE PAVEMENT 9 1/4" (JOINTED)
3. STABILIZED SUBBASE 4"
4. BITUMINOUS MATERIALS (TACK COAT)
5. AGGREGATE SUBGRADE IMPROVEMENT 13 1/2"
6. AGGREGATE SUBGRADE IMPROVEMENT 12"
7. GEOTECHNICAL REINFORCEMENT
8. PIPE UNDERDRAINS, TYPE 2, 6"
9. TOPSOIL FURNISH AND PLACE, 4"
10. EROSION CONTROL BLANKET (SEE NOTE 8)
11. EMBANKMENT
12. AGGREGATE SHOULDERS, TYPE A 6"
13. CONCRETE BARRIER, SINGLE FACE, 42 INCH HEIGHT (SPECIAL)
14. CONCRETE BARRIER, DOUBLE FACE, 42 INCH HEIGHT
15. CONCRETE BARRIER TRANSITION (SPECIAL)
16. CONCRETE BARRIER BASE OR CONCRETE BARRIER BASE (SPECIAL)
17. STEEL PLATE BEAM GUARDRAIL, TYPE A, 6 FOOT POSTS
18. HOT-MIX ASPHALT SHOULDERS, 3" (FOR STABILIZATION AT SPBGR)
19. SUBBASE GRANULAR MATERIAL, TYPE A 9"
20. 1½" HOT-MIX ASPHALT SURFACE COURSE, MIX "C", N70
21. 2½" HOT-MIX ASPHALT BINDER COURSE, IL-19.0, N70
22. AGGREGATE BASE COURSE, TYPE A 6"
23. GEOTECHNICAL FABRIC FOR GROUND STABILIZATION
24. ANCHORAGE SLAB (SEE ANCHORAGE SLAB PLANS)
25. RETAINING WALL (SEE RETAINING WALL PLANS)
26. ANCHORAGE SLAB (SEE RETAINING WALL PLANS)
27. SELECT BACKFILL (SEE RETAINING WALL PLANS)
28. STEEL RAILING (SPECIAL) (SEE STRUCTURAL PLANS)
29. CONCRETE GUTTER, TYPE A (SPECIAL)
30. COMBINATION CONCRETE CURB AND GUTTER, TYPE B-6.24
31. COMBINATION CONCRETE CURB AND GUTTER, TYPE B-6.12
32. COMBINATION CONCRETE CURB AND GUTTER, TYPE M-6.24
33. COMBINATION CONCRETE CURB AND GUTTER, TYPE M-6.12
34. CONCRETE MEDIAN, TYPE SM (SPECIAL)
35. CONCRETE MEDIAN SURFACE, 4 INCH
36. CONCRETE MEDIAN, TYPE SM-6.18
37. CORRUGATED MEDIAN
38. 1½" POLYMERIZED HOT-MIX ASPHALT SURFACE COURSE, MIX "F", N50
39. 1" POLYMERIZED LEVELING BINDER (MACHINE METHOD), N50
40. 2½" HOT MIX ASPHALT SURFACE COURSE, MIX "C", N50
41. POLYMERIZED BITUMINOUS MATERIALS (TACK COAT)
42. PORTLAND CEMENT CONCRETE SIDEWALK 5 INCH
43. SEGMENTAL CONCRETE BLOCK WALL
44. PORTLAND CEMENT CONCRETE DRIVEWAY PAVEMENT, 7 INCH
45. CHAIN LINK FENCE, 4'
46. CONCRETE MEDIAN, TYPE SB (SPECIAL)
47. CONCRETE MEDIAN, TYPE SM-6.12

NOTES:

1. SEE ROADWAY PLANS FOR PAVEMENT WIDTH TRANSITION LOCATIONS.
2. SEE DRAINAGE PLANS FOR LOCATIONS OF PIPE UNDERDRAINS AND DRAINAGE STRUCTURES.
3. SEE PAVEMENT GORE DETAILS FOR LAYOUT AND SLOPE INFORMATION.
4. SEE CROSS SECTIONS FOR SIDE SLOPE AND DITCH DETAILS.
5. SEE RETAINING WALL PLANS FOR LOCATION AND DETAILS.
6. THE UNIT WEIGHT TO CALCULATE ALL HOT MIX ASPHALT SURFACE MIXTURES IS 112 LBS/SQ YD/IN FOR MIX C AND 123 LBS/SQ YD/IN FOR MIX F. APPLICATION RATE FOR TACK COAT IS 0.05 LB/SQ FT.
7. SEE JOINTING PLANS FOR TYPE AND LOCATIONS.
8. EROSION CONTROL BLANKET IS TO BE PLACED AS NEEDED ON SLOPES 1:3 AND FLATTER (TURF) REINFORCEMENT ON STEEPER THAN 1:3) AND SHALL NOT BE PLACED ON FURROWED SLOPES. SEE EROSION AND SEDIMENT CONTROL SHEETS FOR LOCATIONS.
9. FOR SUPERELEVATION TRANSITIONS, SEE DETAIL SHEETS FOR MAINLINE OR PROFILE SHEETS FOR RAMPS AND LOCAL ROADS.
10. IF CURB AND GUTTER OR PCC PAVEMENT IS CONSTRUCTED AFTER OCTOBER 15TH AND THE ROAD WILL BE OPEN TO TRAFFIC PRIOR TO THE FOLLOWING APRIL 15TH, PROTECTIVE COAT SHALL BE USED.

TYP-09

LAYOUT	CBP	10/2/2014
DRAWN	MTH	10/2/2014
REVIEWED	AAP/KMA	10/2/2015

FILE NAME = D2CONA8-HPS-sht-typical09M.dgn	USER NAME = peth08954	DESIGNED - CBP	REVISED - 05/16/17
		DRAWN - MTH	REVISED -
	PLOT SCALE = NA	CHECKED - AAP/KMA	REVISED -
	PLOT DATE = 4/11/2017	DATE - 1/20/2017	REVISED -

STATE OF ILLINOIS
DEPARTMENT OF TRANSPORTATION

TYPICAL SECTIONS
PROPOSED
RAMP 6TH-D

SCALE: NA | SHEET NO. OF SHEETS | STA. TO STA.

F.A.I RTE.	SECTION	COUNTY	TOTAL SHEETS	SHEET NO.
74	(81-1)R & 81-1HVBR	ROCK ISLAND	1504	50

CONTRACT NO. 64C08

ILLINOIS FED. AID PROJECT

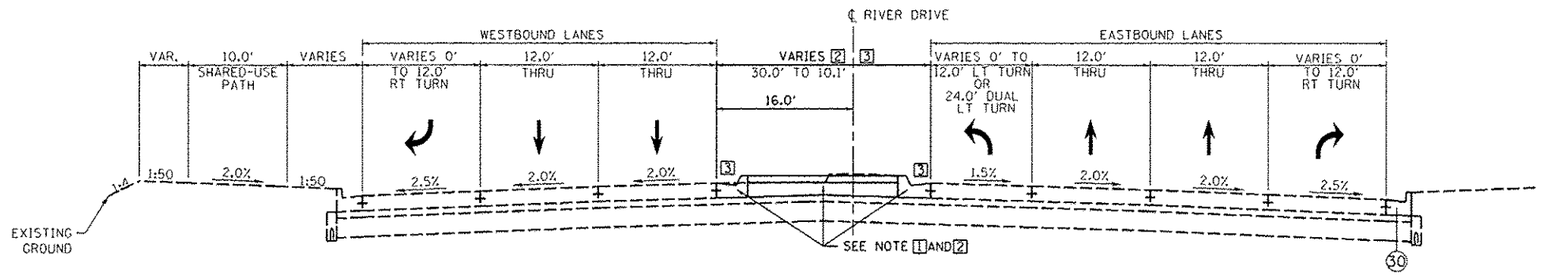

RIVER DRIVE

STA 3013+11.67 TO STA 3016+85.90 (EB OUTSIDE EDGE COMB CC&G INSTALLATION ONLY)
STA 3016+00.87 TO STA 3020+70.55 (MEDIAN REMOVAL/REPLACEMENT ONLY)

1 GUTTER TYPE
STA 3016+00.87 TO 3018+24.18 = 32
STA 3018+24.18 TO 3018+47.77 = GUTTER TRANSITION (PAID FOR AS 32)
STA 3018+47.77 TO 3019+89.53 = 33

2 MEDIAN TYPE
STA 3016+00.87 TO 3019+89.53 = 35
STA 3019+89.53 TO 3020+70.55 = 34
•M-6.24 ON WESTBOUND
•M-6.12 ON EASTBOUND

3 WHEN MEDIAN WIDTH IS LESS THAN OR EQUAL TO 22.0', GUTTER FLAG DRAINS TOWARDS MEDIAN
WHEN MEDIAN WIDTH IS GREATER THAN 22.0', GUTTER FLAG DRAINS TOWARDS PAVEMENT

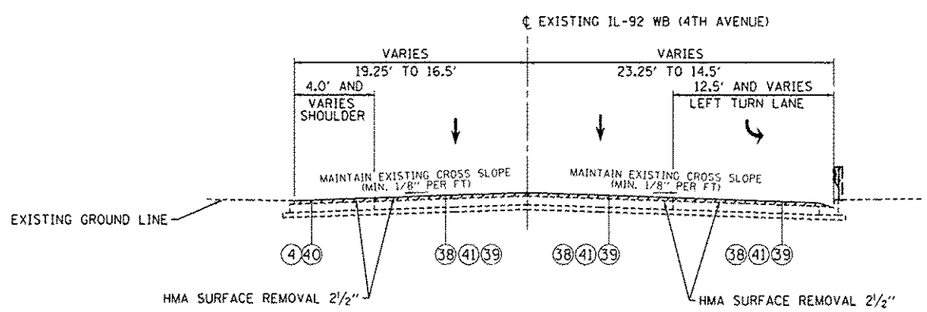

IL-92 WB (4TH AVENUE)

STA 402+25.00 TO 410+00.00

PROPOSED LEGEND:

1. PORTLAND CEMENT CONCRETE PAVEMENT 10 1/2" (JOINTED)
2. PORTLAND CEMENT CONCRETE PAVEMENT 9 1/4" (JOINTED)
3. STABILIZED SUBBASE 4"
4. BITUMINOUS MATERIALS (TACK COAT)
5. AGGREGATE SUBGRADE IMPROVEMENT 13 1/2"
6. AGGREGATE SUBGRADE IMPROVEMENT 12"
7. GEOTECHNICAL REINFORCEMENT
8. PIPE UNDERDRAINS, TYPE 2, 6"
9. TOPSOIL FURNISH AND PLACE, 4"
10. EROSION CONTROL BLANKET (SEE NOTE 8)
11. EMBANKMENT
12. AGGREGATE SHOULDERS, TYPE A 6"
13. CONCRETE BARRIER, SINGLE FACE, 42 INCH HEIGHT (SPECIAL)
14. CONCRETE BARRIER, DOUBLE FACE, 42 INCH HEIGHT
15. CONCRETE BARRIER TRANSITION (SPECIAL)
16. CONCRETE BARRIER BASE OR CONCRETE BARRIER BASE (SPECIAL)
17. STEEL PLATE BEAM GUARDRAIL, TYPE A, 6 FOOT POSTS
18. HOT-MIX ASPHALT SHOULDERS, 3" (FOR STABILIZATION AT SPBGR)
19. SUBBASE GRANULAR MATERIAL, TYPE A 9"
20. 1½" HOT-MIX ASPHALT SURFACE COURSE, MIX "C", N70
21. 2½" HOT-MIX ASPHALT BINDER COURSE, IL-19.0, N70
22. AGGREGATE BASE COURSE, TYPE A 6"
23. GEOTECHNICAL FABRIC FOR GROUND STABILIZATION
24. ANCHORAGE SLAB (SEE ANCHORAGE SLAB PLANS)
25. RETAINING WALL (SEE RETAINING WALL PLANS)
26. ANCHORAGE SLAB (SEE RETAINING WALL PLANS)
27. SELECT BACKFILL (SEE RETAINING WALL PLANS)
28. STEEL RAILING (SPECIAL) (SEE STRUCTURAL PLANS)
29. CONCRETE GUTTER, TYPE A (SPECIAL)
30. COMBINATION CONCRETE CURB AND GUTTER, TYPE B-6.24
31. COMBINATION CONCRETE CURB AND GUTTER, TYPE B-6.12
32. COMBINATION CONCRETE CURB AND GUTTER, TYPE M-6.24
33. COMBINATION CONCRETE CURB AND GUTTER, TYPE M-6.12
34. CONCRETE MEDIAN, TYPE SM (SPECIAL)
35. CONCRETE MEDIAN SURFACE, 4 INCH
36. CONCRETE MEDIAN, TYPE SM-6.18
37. CORRUGATED MEDIAN
38. 1½" POLYMERIZED HOT-MIX ASPHALT SURFACE COURSE, MIX "F", N50
39. 1" POLYMERIZED LEVELING BINDER (MACHINE METHOD), N50
40. 2½" HOT MIX ASPHALT SURFACE COURSE, MIX "C", N50
41. POLYMERIZED BITUMINOUS MATERIALS (TACK COAT)
42. PORTLAND CEMENT CONCRETE SIDEWALK 5 INCH
43. SEGMENTAL CONCRETE BLOCK WALL
44. PORTLAND CEMENT CONCRETE DRIVEWAY PAVEMENT, 7 INCH
45. CHAIN LINK FENCE, 4'
46. CONCRETE MEDIAN, TYPE SB (SPECIAL)
47. CONCRETE MEDIAN, TYPE SM-6.12

NOTES:

1. SEE ROADWAY PLANS FOR PAVEMENT WIDTH TRANSITION LOCATIONS.
2. SEE DRAINAGE PLANS FOR LOCATIONS OF PIPE UNDERDRAINS AND DRAINAGE STRUCTURES.
3. SEE PAVEMENT GORE DETAILS FOR LAYOUT AND SLOPE INFORMATION.
4. SEE CROSS SECTIONS FOR SIDE SLOPE AND DITCH DETAILS.
5. SEE RETAINING WALL PLANS FOR LOCATION AND DETAILS.
6. THE UNIT WEIGHT TO CALCULATE ALL HOT MIX ASPHALT SURFACE MIXTURES IS 112 LBS/SQ YD/IN FOR MIX C AND 123 LBS/SQ YD/IN FOR MIX F. APPLICATION RATE FOR TACK COAT IS 0.05 LB/SQ FT.
7. SEE JOINTING PLANS FOR TYPE AND LOCATIONS.
8. EROSION CONTROL BLANKET IS TO BE PLACED AS NEEDED ON SLOPES 1:3 AND FLATTER (TURF REINFORCEMENT ON STEEPER THAN 1:3) AND SHALL NOT BE PLACED ON FURROWED SLOPES. SEE EROSION AND SEDIMENT CONTROL SHEETS FOR LOCATIONS.
9. FOR SUPERELEVATION TRANSITIONS, SEE DETAIL SHEETS FOR MAINLINE OR PROFILE SHEETS FOR RAMPS AND LOCAL ROADS.
10. IF CURB AND GUTTER OR PCC PAVEMENT IS CONSTRUCTED AFTER OCTOBER 15TH AND THE ROAD WILL BE OPEN TO TRAFFIC PRIOR TO THE FOLLOWING APRIL 15TH, PROTECTIVE COAT SHALL BE USED.

TYP-10

LAYOUT	CBP	10/2/2013
DRAWN	MTH	10/2/2014
REVIEWED	AAP KMA	10/2/2015

FILE NAME = D2CONAB-HPS-sht-typical11L.dgn
USER NAME = peth00954
PLOT SCALE = NA
PLOT DATE = 4/11/2017

DESIGNED - CBP	REVISED - 1	05/16/17
DRAWN - MTH	REVISED -	
CHECKED - AAP/KMA	REVISED -	
DATE - 1/20/2017	REVISED -	

STATE OF ILLINOIS
DEPARTMENT OF TRANSPORTATION

TYPICAL SECTIONS
PROPOSED
LOCAL ROADS

SCALE: NA | SHEET NO. OF SHEETS | STA. TO STA.

F.A.I RTE.	SECTION	COUNTY	TOTAL SHEETS	SHEET NO.
74	(81-1)R & 81-1)HVBR	ROCK ISLAND	1504	51

CONTRACT NO. 64C08

ILLINOIS FED. AID PROJECT

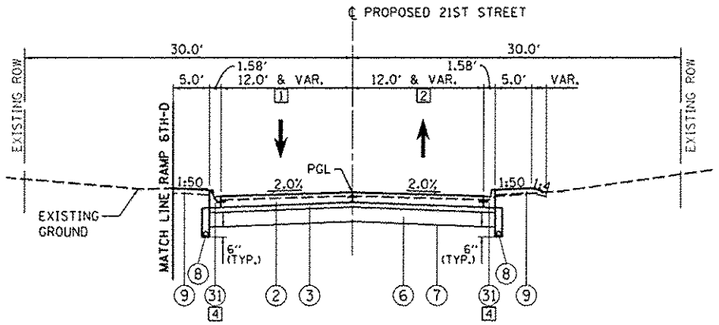

PROPOSED 21ST STREET (NORTH PORTION) [3]

STA 11+00.01 TO STA 13+37.40

[1] LANE WIDTH
STA 11+00.01 TO 12+72.11 = 12.0'
STA 12+72.11 TO 13+03.00 = 12.0' TO 23.3'
STA 13+03.00 TO 13+19.31 = 23.3' TO 20.0'
STA 13+19.31 TO 13+37.40 = 20.0'

[2] LANE WIDTH
STA 11+00.01 TO 12+62.08 = 12.0'
STA 12+62.08 TO 13+21.30 = 12.0' TO 20.0'
STA 13+21.30 TO 13+37.40 = 20.0'

[3] PORTIONS OF THE NORTH AND SOUTH CUL-DE-SACS VARY THROUGHOUT. NO TYPICAL PROVIDED FOR THESE AREAS. SEE PLAN SHEETS FOR:
- SOUTH CUL-DE-SAC: STA 7+00.00 TO 8+36.85
- NORTH CUL-DE-SAC: STA 10+00.00 TO 11+00.01

[4] COMBINATION CONCRETE CURB AND GUTTER TRANSITIONS TO TYPE M-2.12 TO MATCH EXISTING BETWEEN:
STA 12+99.52 RT TO 13+05.00 RT
STA 13+03.63 LT TO 13+05.00 LT
AND MAINTAINS TYPE M-2.12 TO THE PROJECT LIMITS AT STA 13+37.40.

PROPOSED LEGEND:

1. PORTLAND CEMENT CONCRETE PAVEMENT 10 1/2" (JOINTED)
2. PORTLAND CEMENT CONCRETE PAVEMENT 9 1/4" (JOINTED)
3. STABILIZED SUBBASE 4"
4. BITUMINOUS MATERIALS (TACK COAT)
5. AGGREGATE SUBGRADE IMPROVEMENT 13 1/2"
6. AGGREGATE SUBGRADE IMPROVEMENT 12"
7. GEOTECHNICAL REINFORCEMENT
8. PIPE UNDERDRAINS, TYPE 2, 6"
9. TOPSOIL FURNISH AND PLACE, 4"
10. EROSION CONTROL BLANKET (SEE NOTE 8)
11. EMBANKMENT
12. AGGREGATE SHOULDERS, TYPE A 6"
13. CONCRETE BARRIER, SINGLE FACE, 42 INCH HEIGHT (SPECIAL)
14. CONCRETE BARRIER, DOUBLE FACE, 42 INCH HEIGHT
15. CONCRETE BARRIER TRANSITION (SPECIAL)
16. CONCRETE BARRIER BASE OR CONCRETE BARRIER BASE (SPECIAL)
17. STEEL PLATE BEAM GUARDRAIL, TYPE A, 6 FOOT POSTS
18. HOT-MIX ASPHALT SHOULDERS, 3" (FOR STABILIZATION AT SPBGR)
19. SUBBASE GRANULAR MATERIAL, TYPE A 9"
20. 1½" HOT-MIX ASPHALT SURFACE COURSE, MIX "C", N70
21. 2½" HOT-MIX ASPHALT BINDER COURSE, IL-19.0, N70
22. AGGREGATE BASE COURSE, TYPE A 6"
23. GEOTECHNICAL FABRIC FOR GROUND STABILIZATION
24. ANCHORAGE SLAB (SEE ANCHORAGE SLAB PLANS)
25. RETAINING WALL (SEE RETAINING WALL PLANS)
26. ANCHORAGE SLAB (SEE RETAINING WALL PLANS)
27. SELECT BACKFILL (SEE RETAINING WALL PLANS)
28. STEEL RAILING (SPECIAL) (SEE STRUCTURAL PLANS)
29. CONCRETE GUTTER, TYPE A (SPECIAL)
30. COMBINATION CONCRETE CURB AND GUTTER, TYPE B-6.24
31. COMBINATION CONCRETE CURB AND GUTTER, TYPE B-6.12
32. COMBINATION CONCRETE CURB AND GUTTER, TYPE M-6.24
33. COMBINATION CONCRETE CURB AND GUTTER, TYPE M-6.12
34. CONCRETE MEDIAN, TYPE SM (SPECIAL)
35. CONCRETE MEDIAN SURFACE, 4 INCH
36. CONCRETE MEDIAN, TYPE SM-6.18
37. CORRUGATED MEDIAN
38. 1½" POLYMERIZED HOT-MIX ASPHALT SURFACE COURSE, MIX "F", N50
39. 1" POLYMERIZED LEVELING BINDER (MACHINE METHOD), N50
40. 2½" HOT MIX ASPHALT SURFACE COURSE, MIX "C", N50
41. POLYMERIZED BITUMINOUS MATERIALS (TACK COAT)
42. PORTLAND CEMENT CONCRETE SIDEWALK 5 INCH
43. SEGMENTAL CONCRETE BLOCK WALL
44. PORTLAND CEMENT CONCRETE DRIVEWAY PAVEMENT, 7 INCH
45. CHAIN LINK FENCE, 4'
46. CONCRETE MEDIAN, TYPE SB (SPECIAL)
47. CONCRETE MEDIAN, TYPE SM-6.12

21ST STREET

STRUCTURAL DESIGN TRAFFIC: YEAR 2025

PV = 284 SU = 10 MU = 10

ROAD/STREET CLASSIFICATION: LOCAL ROAD CLASS: IV

PERCENT OF STRUCTURAL DESIGN TRAFFIC IN DESIGN LANE:

P = 50% S = 50% M = 50%

TRAFFIC FACTOR: ACTUAL TF = 0.07 AC TYPE = N/A

MINIMUM TF = N/A

PG GRADE: BINDER = N/A SURFACE = N/A

SUBGRADE SUPPORT RATING:

SSR = IBR = 3 (POOR)

NOTES:

1. SEE ROADWAY PLANS FOR PAVEMENT WIDTH TRANSITION LOCATIONS.
2. SEE DRAINAGE PLANS FOR LOCATIONS OF PIPE UNDERDRAINS AND DRAINAGE STRUCTURES.
3. SEE PAVEMENT GORE DETAILS FOR LAYOUT AND SLOPE INFORMATION.
4. SEE CROSS SECTIONS FOR SIDE SLOPE AND DITCH DETAILS.
5. SEE RETAINING WALL PLANS FOR LOCATION AND DETAILS.
6. THE UNIT WEIGHT TO CALCULATE ALL HOT MIX ASPHALT SURFACE MIXTURES IS 112 LBS/SQ YD/IN FOR MIX C AND 123 LBS/SQ YD/IN FOR MIX F. APPLICATION RATE FOR TACK COAT IS 0.05 LB/SQ FT.
7. SEE JOINTING PLANS FOR TYPE AND LOCATIONS.
8. EROSION CONTROL BLANKET IS TO BE PLACED AS NEEDED ON SLOPES 1:3 AND FLATTER (TURF REINFORCEMENT ON STEEPER THAN 1:3) AND SHALL NOT BE PLACED ON FURROWED SLOPES. SEE EROSION AND SEDIMENT CONTROL SHEETS FOR LOCATIONS.
9. FOR SUPERELEVATION TRANSITIONS, SEE DETAIL SHEETS FOR MAINLINE OR PROFILE SHEETS FOR RAMPS AND LOCAL ROADS.
10. IF CURB AND GUTTER OR PCC PAVEMENT IS CONSTRUCTED AFTER OCTOBER 15TH AND THE ROAD WILL BE OPEN TO TRAFFIC PRIOR TO THE FOLLOWING APRIL 15TH, PROTECTIVE COAT SHALL BE USED.

TYP-11

LAYOUT	CBP	10/2/2014
DRAWN	MTH	10/2/2014
REVIEWED	AAP/KMA	10/2/2015

FILE NAME = D2CON4B-HPS-sht-typical12L.dgn

USER NAME = petke00954 | PLOT SCALE = NA | PLOT DATE = 4/11/2017

DESIGNED - CBP | DRAWN - MTH | CHECKED - AAP/KMA | DATE - 1/20/2017

REVISED - ⚠ 05/16/17 | REVISED - | REVISED - | REVISED -

STATE OF ILLINOIS
DEPARTMENT OF TRANSPORTATION

TYPICAL SECTIONS
PROPOSED
LOCAL ROADS

SCALE: NA | SHEET NO. OF SHEETS | STA. TO STA.

F.A.I RTE.	SECTION	COUNTY	TOTAL SHEETS	SHEET NO.
74	(81-1)R & 81-1)VBR	ROCK ISLAND	1504	52

CONTRACT NO. 64C08

ILLINOIS FED. AID PROJECT

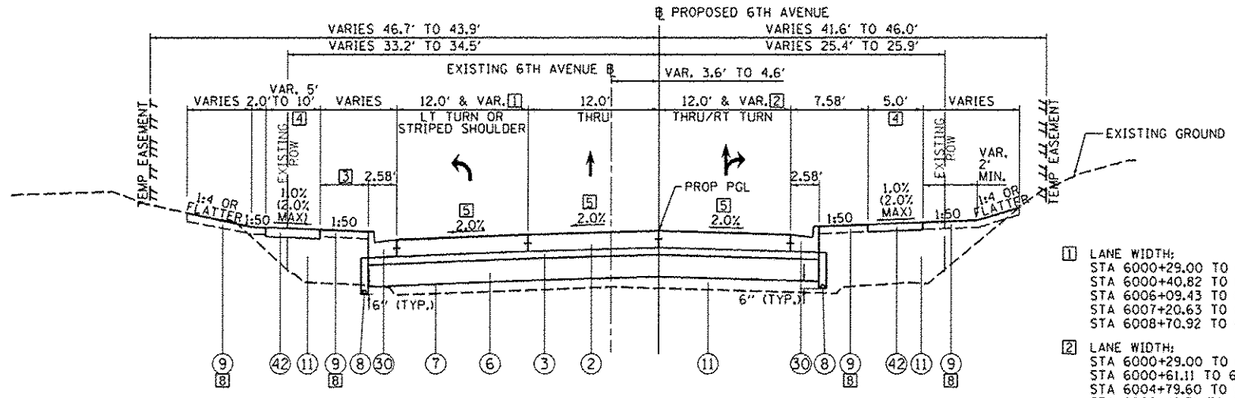

PROPOSED 6TH AVENUE (IL-92 EB)

STA 6000+29.00 TO STA 6009+20.00

INTERSECTION LIMITS (NOT REPRESENTED BY TYPICAL:
STA 6006+09.43 LT TO 6007+20.63 LT
STA 6004+79.60 RT TO 6008+48.71 RT

6TH AVE (IL-92 EB)	
STRUCTURAL DESIGN TRAFFIC:	YEAR 2025
PV = 13,760 SU = 362	MU = 362
ROAD/STREET CLASSIFICATION: ARTERIAL (1-WAY)	CLASS: I
PERCENT OF STRUCTURAL DESIGN TRAFFIC IN DESIGN LANE:	
P = 50% S = 50%	M = 50%
TRAFFIC FACTOR: ACTUAL TF = 3.06	AC TYPE = N/A
MINIMUM TF = 5.58	
PG GRADE: BINDER = N/A	SURFACE = N/A
SUBGRADE SUPPORT RATING:	
SSR = IBR = 3 (POOR)	

1 LANE WIDTH:
STA 6000+29.00 TO 6006+40.82 = VARIES (INTERSECTION)
STA 6000+40.82 TO 6006+09.43 = 12.00'
STA 6006+09.43 TO 6007+20.63 VARIES (INTERSECTION)
STA 6007+20.63 TO 6008+70.92 = 8.00'
STA 6008+70.92 TO 6009+20.00 TAPERS 8.00' TO 7.29'

2 LANE WIDTH:
STA 6000+29.00 TO 6000+61.11 = VARIES (INTERSECTION)
STA 6000+61.11 TO 6004+79.60 = 12.00'
STA 6004+79.60 TO 6008+48.71 12.00' & VAR. (INTERSECTION)
STA 6008+48.71 TO 6008+70.92 = 12.00'
STA 6008+70.92 TO 6009+20.00 TAPERS 12.00' TO 10.71'

3 BUFFER AREA (LEFT SIDE):
STA 6000+43.82 LT TO 6001+90.00 LT = 3.00'
STA 6001+90.00 LT TO 6002+00.00 LT = 3.00' TO 2.50'
STA 6002+00.00 LT TO 6003+10.00 LT = 2.50'
STA 6003+10.00 LT TO 6003+30.00 LT = 2.50' TO 5.00'
STA 6003+30.00 LT TO 6004+76.33 LT = 5.00'
STA 6004+76.33 LT TO 6006+99.13 LT = N/A
STA 6006+99.13 LT TO 6007+20.63 = VARIES 0.00' TO 10.00'
STA 6007+20.63 LT TO 6008+02.71 LT = 10.00'
STA 6008+02.71 LT TO 6008+31.10 LT = 10.00' TO 5.23'
STA 6008+31.10 LT TO 6008+50.00 LT (M.E) = 5.23'

4 PROPOSED SIDEWALK:
STA 6000+38.93 RT TO 6005+76.11 RT
STA 6007+05.41 RT TO 6008+50.00 RT
STA 6000+33.43 LT TO 6006+18.85 LT
STA 6006+95.61 LT TO 6008+50.00 LT

5 SEE PLAN SHEET FOR CROSS SLOPE TRANSITIONS AT:
A) INTERSECTION WITH 19TH STREET, TRANSITION BETWEEN STA 6000+29.00 TO STA 6000+61.11.
B) INTERSECTION WITH RAMP 6TH-C/6TH-D, TRANSITION BETWEEN STA 6005+75.00 TO STA 6007+50.00.
C) EAST LIMIT DUE TO TIE-IN TO EXISTING CROSS SLOPE AND DIFFERENT CROWN LOCATION. TRANSITION BETWEEN STA 6008+62.00 TO STA 6009+20.00.

6 SOUTHBOUND PAVEMENT WIDENING:
STA 644+48.97 TO STA 645+20.84 = 0.00'
STA 645+20.84 TO STA 646+17.41 = 0.00' TO 19.55'
(FOR 6TH AVE TURN LANE AND SB LANE)
STA 646+17.41 TO STA 646+35.73= 19.55' TO 32.85'
(FOR 6TH AVE TURN LANE, GORE AND SB LANE)

7 RIGHT TURN LANE:
STA 644+48.97 TO STA 644+75.37 = 0.00'
STA 644+75.37 TO STA 645+37.21 = 0.00' TO 12.00'
STA 645+37.21 TO STA 646+35.73 = 12.00'

8 SEE LANDSCAPING PLANS FOR TOPSOIL PLACEMENT OMISSION AREAS UNDER OR NEAR STRUCTURES AT FINAL GRADING.

PROPOSED LEGEND:

1. PORTLAND CEMENT CONCRETE PAVEMENT 10 1/2" (JOINTED)
2. PORTLAND CEMENT CONCRETE PAVEMENT 9 1/4" (JOINTED)
3. STABILIZED SUBBASE 4"
4. BITUMINOUS MATERIALS (TACK COAT)
5. AGGREGATE SUBGRADE IMPROVEMENT 13 1/2"
6. AGGREGATE SUBGRADE IMPROVEMENT 12"
7. GEOTECHNICAL REINFORCEMENT
8. PIPE UNDERDRAINS, TYPE 2, 6"
9. TOPSOIL FURNISH AND PLACE, 4"
10. EROSION CONTROL BLANKET (SEE NOTE 8)
11. EMBANKMENT
12. AGGREGATE SHOULDERS, TYPE A 6"
13. CONCRETE BARRIER, SINGLE FACE, 42 INCH HEIGHT (SPECIAL)
14. CONCRETE BARRIER, DOUBLE FACE, 42 INCH HEIGHT
15. CONCRETE BARRIER TRANSITION (SPECIAL)
16. CONCRETE BARRIER BASE OR CONCRETE BARRIER BASE (SPECIAL)
17. STEEL PLATE BEAM GUARDRAIL, TYPE A, 6 FOOT POSTS
18. HOT-MIX ASPHALT SHOULDERS, 3" (FOR STABILIZATION AT SPBGR)
19. SUBBASE GRANULAR MATERIAL, TYPE A 9"
20. 1½" HOT-MIX ASPHALT SURFACE COURSE, MIX "C", N70
21. 2½" HOT-MIX ASPHALT BINDER COURSE, IL-19.0, N70
22. AGGREGATE BASE COURSE, TYPE A 6"
23. GEOTECHNICAL FABRIC FOR GROUND STABILIZATION
24. ANCHORAGE SLAB (SEE ANCHORAGE SLAB PLANS)
25. RETAINING WALL (SEE RETAINING WALL PLANS)
26. ANCHORAGE SLAB (SEE RETAINING WALL PLANS)
27. SELECT BACKFILL (SEE RETAINING WALL PLANS)
28. STEEL RAILING (SPECIAL) (SEE STRUCTURAL PLANS)
29. CONCRETE GUTTER, TYPE A (SPECIAL)
30. COMBINATION CONCRETE CURB AND GUTTER, TYPE B-6.24
31. COMBINATION CONCRETE CURB AND GUTTER, TYPE B-6.12
32. COMBINATION CONCRETE CURB AND GUTTER, TYPE M-6.24
33. COMBINATION CONCRETE CURB AND GUTTER, TYPE M-6.12
34. CONCRETE MEDIAN, TYPE SM (SPECIAL)
35. CONCRETE MEDIAN SURFACE, 4 INCH
36. CONCRETE MEDIAN, TYPE SM-6.18
37. CORRUGATED MEDIAN
38. 1½" POLYMERIZED HOT-MIX ASPHALT SURFACE COURSE, MIX "F", N50
39. 1" POLYMERIZED LEVELING BINDER (MACHINE METHOD), N50
40. 2½" HOT MIX ASPHALT SURFACE COURSE, MIX "C", N50
41. POLYMERIZED BITUMINOUS MATERIALS (TACK COAT)
42. PORTLAND CEMENT CONCRETE SIDEWALK 5 INCH
43. SEGMENTAL CONCRETE BLOCK WALL
44. PORTLAND CEMENT CONCRETE DRIVEWAY PAVEMENT, 7 INCH
45. CHAIN LINK FENCE, 4'
46. CONCRETE MEDIAN, TYPE SB (SPECIAL)
47. CONCRETE MEDIAN, TYPE SM-6.12

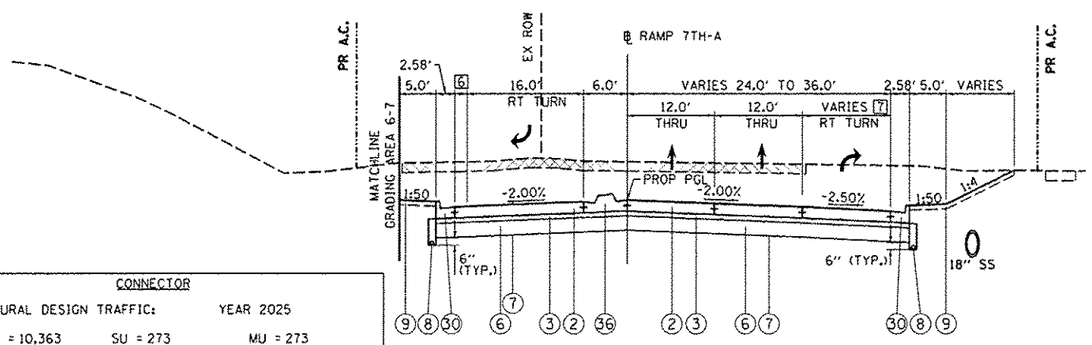

PROPOSED CONNECTOR BETWEEN 6TH AVE AND 7TH AVE

STA 644+48.97 TO STA 646+35.73

INTERSECTION LIMITS (NOT REPRESENTED BY TYPICAL)
STA 642+14.18 TO 644+48.97
STA 646+35.73 TO 647+06.88

CONNECTOR	
STRUCTURAL DESIGN TRAFFIC:	YEAR 2025
PV = 10,363 SU = 273	MU = 273
ROAD/STREET CLASSIFICATION: LOCAL ROAD	CLASS: II
PERCENT OF STRUCTURAL DESIGN TRAFFIC IN DESIGN LANE:	
P = 50% S = 50%	M = 50%
TRAFFIC FACTOR: ACTUAL TF = 1.93	AC TYPE = N/A
MINIMUM TF = N/A	
PG GRADE: BINDER = N/A	SURFACE = N/A
SUBGRADE SUPPORT RATING:	
SSR = IBR = 3 (POOR)	

NOTES:

1. SEE ROADWAY PLANS FOR PAVEMENT WIDTH TRANSITION LOCATIONS.
2. SEE DRAINAGE PLANS FOR LOCATIONS OF PIPE UNDERDRAINS AND DRAINAGE STRUCTURES.
3. SEE PAVEMENT GORE DETAILS FOR LAYOUT AND SLOPE INFORMATION.
4. SEE CROSS SECTIONS FOR SIDE SLOPE AND DITCH DETAILS.
5. SEE RETAINING WALL PLANS FOR LOCATION AND DETAILS.
6. THE UNIT WEIGHT TO CALCULATE ALL HOT MIX ASPHALT SURFACE MIXTURES IS 112 LBS/SQ YD/IN FOR MIX C AND 123 LBS/SQ YD/IN FOR MIX F. APPLICATION RATE FOR TACK COAT IS 0.05 LB/SQ FT.
7. SEE JOINTING PLANS FOR TYPE AND LOCATIONS.
8. EROSION CONTROL BLANKET IS TO BE PLACED AS NEEDED ON SLOPES 1:3 AND FLATTER (TURF REINFORCEMENT ON STEEPER THAN 1:3) AND SHALL NOT BE PLACED ON FURROWED SLOPES. SEE EROSION AND SEDIMENT CONTROL SHEETS FOR LOCATIONS.
9. FOR SUPERELEVATION TRANSITIONS, SEE DETAIL SHEETS FOR MAINLINE OR PROFILE SHEETS FOR RAMPS AND LOCAL ROADS.
10. IF CURB AND GUTTER OR PCC PAVEMENT IS CONSTRUCTED AFTER OCTOBER 15TH AND THE ROAD WILL BE OPEN TO TRAFFIC PRIOR TO THE FOLLOWING APRIL 15TH, PROTECTIVE COAT SHALL BE USED.

TYP-12

FILE NAME = D2CONAB-HPS-sht-typical13L.dgn	USER NAME = peth00954	DESIGNED - CBP	REVISED - 05/16/17	STATE OF ILLINOIS DEPARTMENT OF TRANSPORTATION
		DRAWN - MTH	REVISED -	
	PLOT SCALE = NA	CHECKED - AAP/KMA	REVISED -	
	PLOT DATE = 4/11/2017	DATE - 1/20/2017	REVISED -	

TYPICAL SECTIONS
PROPOSED
LOCAL ROADS

SCALE: NA | SHEET NO. OF SHEETS | STA. TO STA.

F.A.I RTE.	SECTION	COUNTY	TOTAL SHEETS	SHEET NO.
74	(81-1)R & 81-1HVBR	ROCK ISLAND	1504	53
		CONTRACT NO. 64C08		
		ILLINOIS FED. AID PROJECT		

11/7/01	CBP	10/2/2014
05/14/07	MTH	10/2/2014
05/16/17	AAP/KMA	10/2/2015

HANSON

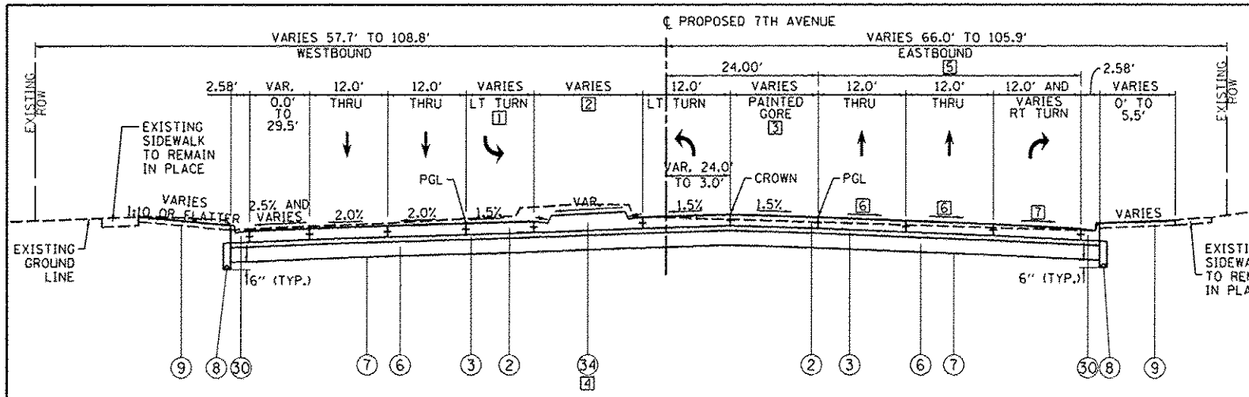

PROPOSED 7TH AVENUE

STA 7004+20.00 TO STA 7007+22.71 5

INTERSECTION LIMITS (NOT REPRESENTED BY TYPICAL)
STA 7007+22.71 TO STA 7008+49.91

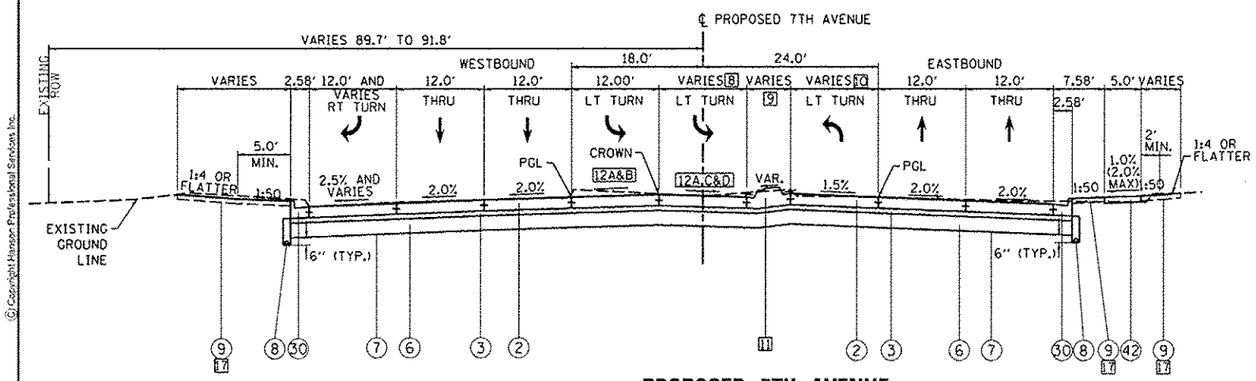

PROPOSED 7TH AVENUE

STA 7008+49.91 TO STA 7012+51.21

INTERSECTION LIMITS (NOT REPRESENTED BY TYPICAL)
STA 7012+51.21 TO STA 7013+46.99

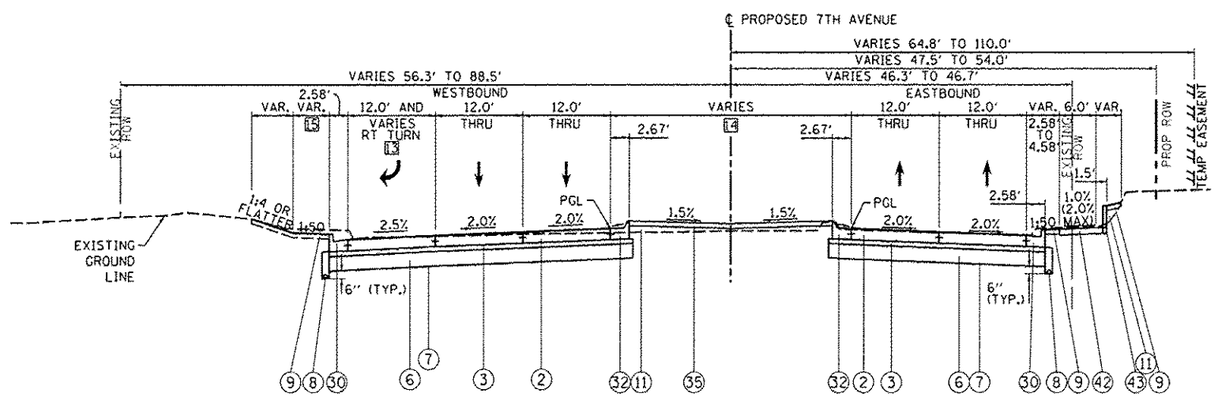

PROPOSED 7TH AVENUE

STA 7013+46.99 TO STA 7017+03.00 16

1 WB LEFT TURN LANE WIDTH:
STA 7004+20.00 TO 7005+56.76 = 12.00'
STA 7005+56.76 TO 7007+02.86 = 12.00' TO 1.00'
STA 7007+02.86 TO 7007+22.71 = 1.00'

2 MEDIAN WIDTH:
STA 7004+25.45 TO 7005+56.76 = VARIES
5.84' TO 14.59' TO 8.00'
STA 7005+56.76 TO 7007+22.71 = 8.00'

3 PAINTED GORE WIDTH:
STA 7004+20.00 TO 7004+76.72 = 0.00'
STA 7004+76.72 TO 7007+03.44 = 0.00' TO 21.00'
STA 7007+03.44 TO 7007+27.34 = 21.00'

4 MEDIAN SHALL BE PAID FOR AS 34 WHICH SHALL INCLUDE THE CONSTRUCTION OF C&G ACCORDING TO THE FOLLOWING:
WESTBOUND
M-6.12: STA 7004+25.45 TO 7005+56.76
C&G TRANSITION: STA 7005+56.76 TO 7005+69.25
M-6.24: STA 7005+69.25 TO 7007+22.71
EASTBOUND
M-6.24: STA 7004+25.45 TO 7004+76.06
C&G TRANSITION: STA 7004+76.06 TO 7004+85.00
M-6.12: STA 7004+85.00 TO 7007+22.71

5 WESTBOUND AND MEDIAN ONLY WORK FROM STA 7004+20.00 TO 7005+40.00. BEGIN RECONSTRUCTION OF ALL OF PAVEMENT AT STA 7005+40.00.

6 LANE CROSS SLOPE:
STA 7005+40.00 TO 7006+00.00 = 1.00%
STA 7006+00.00 TO 7006+65.00 = 1.00% TO 2.00%
STA 7006+65.00 TO 7007+22.71 = 2.00%

7 LANE CROSS SLOPE:
STA 7005+40.00 TO 7006+00.00 = 1.00%
STA 7006+00.00 TO 7006+65.00 = 1.00% TO 2.50%
STA 7006+65.00 TO 7007+22.71 = 2.50%

8 WB LEFT TURN LANE WIDTH:
STA 7008+49.91 TO 7011+25.61 = 12.00'
STA 7011+25.61 TO 7012+29.11 = 12.00' TO 1.76'

9 MEDIAN WIDTH:
STA 7008+57.25 TO 7009+93.13 = VARIES
9.50' TO 18.00' TO 6.00'
STA 7009+93.13 TO 7011+25.61 = 6.00'
STA 7011+25.61 TO 7012+43.66 = VARIES
6.00' TO 16.25' TO 10.87'

10 EB LEFT TURN LANE WIDTH:
STA 7008+49.91 TO 7008+85.14 = 0.00'
STA 7008+85.14 TO 7009+93.13 = 0.00' TO 12.00'
STA 7009+93.13 TO 7012+51.21 = 12.00'

11 MEDIAN SHALL BE PAID FOR ACCORDING TO THE FOLLOWING:
•STA 7008+49.91 TO 7009+39.14 = 35, 32 (EB), AND 33 (WB)
•STA 7009+39.14 TO 7012+51.21 = 34
WHICH SHALL INCLUDE THE CONSTRUCTION OF
WESTBOUND
M-6.12 STA 7009+39.14 TO 7011+25.61
C&G TRANSITION STA 7011+25.61 TO 7011+35.72
M-6.24 STA 7011+35.72 TO 7012+51.21
EASTBOUND
M-6.24 STA 7009+39.14 TO 7009+84.02
C&G TRANSITION STA 7009+84.02 TO 7009+93.13
M-6.12 STA 7009+93.13 TO 7012+51.21

12 LANE CROSS SLOPE:
A) STA 7008+49.91 TO 7008+60.00 = 1.15% TO 1.50%
B) STA 7008+60.00 TO 7012+51.21 = 1.50%
C) STA 7008+60.00 TO 7009+15.00 = 1.50% TO -1.50%
D) STA 7009+15.00 TO 7012+51.21 = -1.50%

13 WB RIGHT TURN LANE WIDTH:
STA 7013+46.99 TO 7014+56.29 = VARIES (INTERSECTION)
STA 7014+56.29 TO 7015+26.24 = 12.00'
STA 7015+26.24 TO 7016+60.97 = 12.00' TO 0.00'
STA 7016+60.97 TO 7017+03.00 = 0.00'

14 MEDIAN WIDTH:
STA 7013+50.78 TO 7016+94.53 =
32.85' TO 37.00' TO 12.00'

15 5.0' MIN WHERE EXISTING SIDEWALK IS NOT PRESENT FROM STA 7014+10 TO 7016+06 OTHERWISE 1:4 OR FLATTER TO EXISTING SIDEWALK

16 MEDIANS OUTSIDE OF THE PROJECT LIMITS ARE TO BE REMOVED IN ORDER TO ACCOMMODATE THE MAINTENANCE OF TRAFFIC (MOT). ONCE MOT IS COMPLETE, MEDIANS WILL BE REPLACED AS SHOWN ON ROADWAY PLANS. APPLIES TO:
•STA 7017+34.40 TO 7018+90.48
•STA 7018+90.48 TO 7022+58.66

17 SEE LANDSCAPING PLANS FOR TOPSOIL PLACEMENT OMISSION AREAS UNDER OR NEAR STRUCTURES AT FINAL GRADING.

PROPOSED LEGEND:

1. PORTLAND CEMENT CONCRETE PAVEMENT 10 1/2" (JOINTED)
2. PORTLAND CEMENT CONCRETE PAVEMENT 9 1/4" (JOINTED)
3. STABILIZED SUBBASE 4"
4. BITUMINOUS MATERIALS (TACK COAT)
5. AGGREGATE SUBGRADE IMPROVEMENT 13 1/2"
6. AGGREGATE SUBGRADE IMPROVEMENT 12"
7. GEOTECHNICAL REINFORCEMENT
8. PIPE UNDERDRAINS, TYPE 2, 6"
9. TOPSOIL FURNISH AND PLACE, 4"
10. EROSION CONTROL BLANKET (SEE NOTE 8)
11. EMBANKMENT
12. AGGREGATE SHOULDERS, TYPE A 6"
13. CONCRETE BARRIER, SINGLE FACE, 42 INCH HEIGHT (SPECIAL)
14. CONCRETE BARRIER, DOUBLE FACE, 42 INCH HEIGHT
15. CONCRETE BARRIER TRANSITION (SPECIAL)
16. CONCRETE BARRIER BASE OR CONCRETE BARRIER BASE (SPECIAL)
17. STEEL PLATE BEAM GUARDRAIL, TYPE A, 6 FOOT POSTS
18. HOT-MIX ASPHALT SHOULDERS, 3" (FOR STABILIZATION AT SPBGR)
19. SUBBASE GRANULAR MATERIAL, TYPE A 9"
20. 1½" HOT-MIX ASPHALT SURFACE COURSE, MIX "C", N70
21. 2½" HOT-MIX ASPHALT BINDER COURSE, IL-19.0, N70
22. AGGREGATE BASE COURSE, TYPE A 6"
23. GEOTECHNICAL FABRIC FOR GROUND STABILIZATION
24. ANCHORAGE SLAB (SEE ANCHORAGE SLAB PLANS)
25. RETAINING WALL (SEE RETAINING WALL PLANS)
26. ANCHORAGE SLAB (SEE RETAINING WALL PLANS)
27. SELECT BACKFILL (SEE RETAINING WALL PLANS)
28. STEEL RAILING (SPECIAL) (SEE STRUCTURAL PLANS)
29. CONCRETE GUTTER, TYPE A (SPECIAL)
30. COMBINATION CONCRETE CURB AND GUTTER, TYPE B-6.24
31. COMBINATION CONCRETE CURB AND GUTTER, TYPE B-6.12
32. COMBINATION CONCRETE CURB AND GUTTER, TYPE M-6.24
33. COMBINATION CONCRETE CURB AND GUTTER, TYPE M-6.12
34. CONCRETE MEDIAN, TYPE SM (SPECIAL)
35. CONCRETE MEDIAN SURFACE, 4 INCH
36. CONCRETE MEDIAN, TYPE SM-6.18
37. CORRUGATED MEDIAN
38. 1½" POLYMERIZED HOT-MIX ASPHALT SURFACE COURSE, MIX "F", N50
39. 1" POLYMERIZED LEVELING BINDER (MACHINE METHOD), N50
40. 2½" HOT MIX ASPHALT SURFACE COURSE, MIX "C", N50
41. POLYMERIZED BITUMINOUS MATERIALS (TACK COAT)
42. PORTLAND CEMENT CONCRETE SIDEWALK 5 INCH
43. SEGMENTAL CONCRETE BLOCK WALL
44. PORTLAND CEMENT CONCRETE DRIVEWAY PAVEMENT, 7 INCH
45. CHAIN LINK FENCE, 4'
46. CONCRETE MEDIAN, TYPE SB (SPECIAL)
47. CONCRETE MEDIAN, TYPE SM-6.12

NOTES:

1. SEE ROADWAY PLANS FOR PAVEMENT WIDTH TRANSITION LOCATIONS.
2. SEE DRAINAGE PLANS FOR LOCATIONS OF PIPE UNDERDRAINS AND DRAINAGE STRUCTURES.
3. SEE PAVEMENT GORE DETAILS FOR LAYOUT AND SLOPE INFORMATION.
4. SEE CROSS SECTIONS FOR SIDE SLOPE AND DITCH DETAILS.
5. SEE RETAINING WALL PLANS FOR LOCATION AND DETAILS.
6. THE UNIT WEIGHT TO CALCULATE ALL HOT MIX ASPHALT SURFACE MIXTURES IS 112 LBS/SQ YD/IN FOR MIX C AND 123 LBS/SQ YD/IN FOR MIX F. APPLICATION RATE FOR TACK COAT IS 0.05 LB/SQ FT.
7. SEE JOINTING PLANS FOR TYPE AND LOCATIONS.
8. EROSION CONTROL BLANKET IS TO BE PLACED AS NEEDED ON SLOPES 1:3 AND FLATTER (TURF REINFORCEMENT ON STEEPER THAN 1:3) AND SHALL NOT BE PLACED ON FURROWED SLOPES. SEE EROSION AND SEDIMENT CONTROL SHEETS FOR LOCATIONS.
9. FOR SUPERELEVATION TRANSITIONS, SEE DETAIL SHEETS FOR MAINLINE OR PROFILE SHEETS FOR RAMPS AND LOCAL ROADS.
10. IF CURB AND GUTTER OR PCC PAVEMENT IS CONSTRUCTED AFTER OCTOBER 15TH AND THE ROAD WILL BE OPEN TO TRAFFIC PRIOR TO THE FOLLOWING APRIL 15TH, PROTECTIVE COAT SHALL BE USED.

TYP-13

LAYOUT	CBP	10/27/2014
DRAWN	MTH	10/27/2014
REVIEWED	AAP/KMA	10/27/2015

FILE NAME = 02CONAB-HPS-sht-typical14L.dgn

USER NAME = pethm00954	DESIGNED - CBP	REVISED - 05/16/17	STATE OF ILLINOIS DEPARTMENT OF TRANSPORTATION
	DRAWN - MTH	REVISED -	
PLOT SCALE = NA	CHECKED - AAP/KMA	REVISED -	
PLOT DATE = 4/11/2017	DATE - 1/20/2017	REVISED -	

TYPICAL SECTIONS PROPOSED LOCAL ROADS

SCALE: NA | SHEET NO. OF SHEETS | STA. TO STA.

F.A.I RTE.	SECTION	COUNTY	TOTAL SHEETS	SHEET NO.
74	(81-1)R & 81-1)HVBR	ROCK ISLAND	1504	54

CONTRACT NO. 64C08

ILLINOIS FED. AID PROJECT

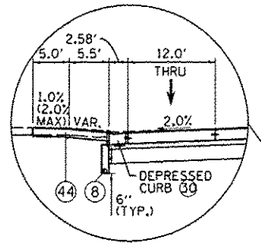

ALTERNATE LEFT ROADSIDE AT ENTRANCE LOCATIONS

STA 1909+87.19 TO STA 1910+12.69
STA 1910+35.45 TO STA 1910+53.45

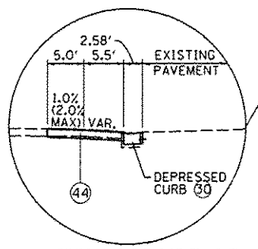

LEFT ROADSIDE AT ENTRANCE LOCATION OUTSIDE OF PAVEMENT RECONSTRUCTION LIMIT

STA 1909+09.46 TO STA 1909+33.46

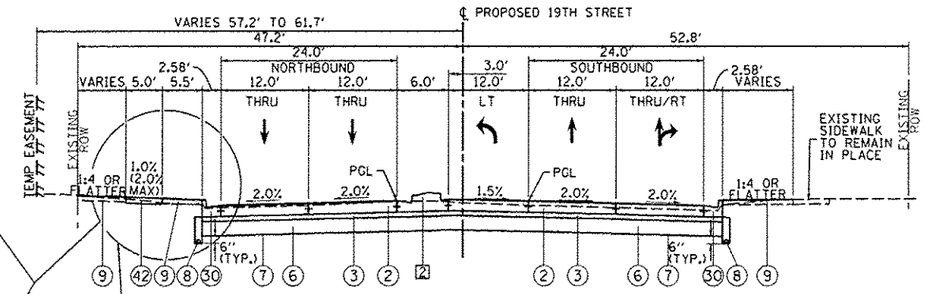

PROPOSED 19TH STREET

STA 1909+70.00 TO STA 1910+67.64 [1]

INTERSECTION LIMIT (NOT REPRESENTED BY TYPICAL)

STA 1910+67.64 TO STA 1913+20.25

[1] MEDIANS BEYOND PROJECT LIMITS SHALL BE REMOVED AND REPLACED WITH TEMPORARY PAVEMENT FOR MAINTENANCE OF TRAFFIC. MEDIANS WILL BE REPLACED IN PLACE UPON COMPLETION OF MAINTENANCE OF TRAFFIC. MEDIANS WILL BE PAID FOR ACCORDING TO THE FOLLOWING:
STA 1908+69.72 TO 1909+63.47 = 47
STA 1909+63.47 TO 1909+70.00 = 37

[2] MEDIAN SHALL BE PAID FOR ACCORDING TO THE FOLLOWING:
STA 1909+70.00 TO 1910+54.88 = 37
STA 1910+54.88 TO 1911+36.59 = 34 WHICH SHALL INCLUDE THE CONSTRUCTION OF M-6.24 C&G FOR NB AND M-6.12 C&G FOR SB

PROPOSED LEGEND:

1. PORTLAND CEMENT CONCRETE PAVEMENT 10 1/2" (JOINTED)
2. PORTLAND CEMENT CONCRETE PAVEMENT 9 1/4" (JOINTED)
3. STABILIZED SUBBASE 4"
4. BITUMINOUS MATERIALS (TACK COAT)
5. AGGREGATE SUBGRADE IMPROVEMENT 13 1/2"
6. AGGREGATE SUBGRADE IMPROVEMENT 12"
7. GEOTECHNICAL REINFORCEMENT
8. PIPE UNDERDRAINS, TYPE 2, 6"
9. TOPSOIL FURNISH AND PLACE, 4"
10. EROSION CONTROL BLANKET (SEE NOTE 8)
11. EMBANKMENT
12. AGGREGATE SHOULDERS, TYPE A 6"
13. CONCRETE BARRIER, SINGLE FACE, 42 INCH HEIGHT (SPECIAL)
14. CONCRETE BARRIER, DOUBLE FACE, 42 INCH HEIGHT
15. CONCRETE BARRIER TRANSITION (SPECIAL)
16. CONCRETE BARRIER BASE OR CONCRETE BARRIER BASE (SPECIAL)
17. STEEL PLATE BEAM GUARDRAIL, TYPE A, 6 FOOT POSTS
18. HOT-MIX ASPHALT SHOULDERS, 3" (FOR STABILIZATION AT SPBGR)
19. SUBBASE GRANULAR MATERIAL, TYPE A 9"
20. 1½" HOT-MIX ASPHALT SURFACE COURSE, MIX "C", N70
21. 2½" HOT-MIX ASPHALT BINDER COURSE, IL-19.0, N70
22. AGGREGATE BASE COURSE, TYPE A 6"
23. GEOTECHNICAL FABRIC FOR GROUND STABILIZATION
24. ANCHORAGE SLAB (SEE ANCHORAGE SLAB PLANS)
25. RETAINING WALL (SEE RETAINING WALL PLANS)
26. ANCHORAGE SLAB (SEE RETAINING WALL PLANS)
27. SELECT BACKFILL (SEE RETAINING WALL PLANS)
28. STEEL RAILING (SPECIAL) (SEE STRUCTURAL PLANS)
29. CONCRETE GUTTER, TYPE A (SPECIAL)
30. COMBINATION CONCRETE CURB AND GUTTER, TYPE B-6.24
31. COMBINATION CONCRETE CURB AND GUTTER, TYPE B-6.12
32. COMBINATION CONCRETE CURB AND GUTTER, TYPE M-6.24
33. COMBINATION CONCRETE CURB AND GUTTER, TYPE M-6.12
34. CONCRETE MEDIAN, TYPE SM (SPECIAL)
35. CONCRETE MEDIAN SURFACE, 4 INCH
36. CONCRETE MEDIAN, TYPE SM-6.18
37. CORRUGATED MEDIAN
38. 1½" POLYMERIZED HOT-MIX ASPHALT SURFACE COURSE, MIX "F", N50
39. 1" POLYMERIZED LEVELING BINDER (MACHINE METHOD), N50
40. 2½" HOT MIX ASPHALT SURFACE COURSE, MIX "C", N50
41. POLYMERIZED BITUMINOUS MATERIALS (TACK COAT)
42. PORTLAND CEMENT CONCRETE SIDEWALK 5 INCH
43. SEGMENTAL CONCRETE BLOCK WALL
44. PORTLAND CEMENT CONCRETE DRIVEWAY PAVEMENT, 7 INCH
45. CHAIN LINK FENCE, 4'
46. CONCRETE MEDIAN, TYPE SB (SPECIAL)
47. CONCRETE MEDIAN, TYPE SM-6.12

7TH AVENUE

STRUCTURAL DESIGN TRAFFIC: YEAR 2025
PV = 13,846 SU = 364 MU = 364
ROAD/STREET CLASSIFICATION: COLLECTOR CLASS: I
PERCENT OF STRUCTURAL DESIGN TRAFFIC IN DESIGN LANE:
P = 32% S = 45% M = 45%
TRAFFIC FACTOR: ACTUAL TF = 2.77 AC TYPE = N/A
MINIMUM TF = N/A
PG GRADE: BINDER = N/A SURFACE = N/A
SUBGRADE SUPPORT RATING:
SSR = IBR = 3 (POOR)

19TH STREET

STRUCTURAL DESIGN TRAFFIC: YEAR 2025
PV = 10,234 SU = 269 MU = 269
ROAD/STREET CLASSIFICATION: ARTERIAL CLASS: I
PERCENT OF STRUCTURAL DESIGN TRAFFIC IN DESIGN LANE:
P = 32% S = 45% M = 45%
TRAFFIC FACTOR: ACTUAL TF = 2.04 AC TYPE = N/A
MINIMUM TF = N/A
PG GRADE: BINDER = N/A SURFACE = N/A
SUBGRADE SUPPORT RATING:
SSR = IBR = 3 (POOR)

NOTES:

1. SEE ROADWAY PLANS FOR PAVEMENT WIDTH TRANSITION LOCATIONS.
2. SEE DRAINAGE PLANS FOR LOCATIONS OF PIPE UNDERDRAINS AND DRAINAGE STRUCTURES.
3. SEE PAVEMENT GORE DETAILS FOR LAYOUT AND SLOPE INFORMATION.
4. SEE CROSS SECTIONS FOR SIDE SLOPE AND DITCH DETAILS.
5. SEE RETAINING WALL PLANS FOR LOCATION AND DETAILS.
6. THE UNIT WEIGHT TO CALCULATE ALL HOT MIX ASPHALT SURFACE MIXTURES IS 112 LBS/SQ YD/IN FOR MIX C AND 123 LBS/SQ YD/IN FOR MIX F. APPLICATION RATE FOR TACK COAT IS 0.05 LB/SQ FT.
7. SEE JOINTING PLANS FOR TYPE AND LOCATIONS.
8. EROSION CONTROL BLANKET IS TO BE PLACED AS NEEDED ON SLOPES 1:3 AND FLATTER (TURF REINFORCEMENT ON STEEPER THAN 1:3) AND SHALL NOT BE PLACED ON FURROWED SLOPES. SEE EROSION AND SEDIMENT CONTROL SHEETS FOR LOCATIONS.
9. FOR SUPERELEVATION TRANSITIONS, SEE DETAIL SHEETS FOR MAINLINE OR PROFILE SHEETS FOR RAMPS AND LOCAL ROADS.
10. IF CURB AND GUTTER OR PCC PAVEMENT IS CONSTRUCTED AFTER OCTOBER 15TH AND THE ROAD WILL BE OPEN TO TRAFFIC PRIOR TO THE FOLLOWING APRIL 15TH, PROTECTIVE COAT SHALL BE USED.

TYP-14

LAYOUT	CBP	10/2/2014
DRAWN	MTH	10/2/2014
DESIGNED	AAP-KMA	10/2/2015

FILE NAME = D2CONAB-HPS-sht-typical15L.dgn

USER NAME = petke20954	DESIGNED - CBP	REVISED - △1 05/16/17	
	DRAWN - MTH	REVISED -	
PLOT SCALE = NA	CHECKED - AAP/KMA	REVISED -	
PLOT DATE = 4/11/2017	DATE - 1/20/2017	REVISED -	

STATE OF ILLINOIS
DEPARTMENT OF TRANSPORTATION

TYPICAL SECTIONS
PROPOSED
LOCAL ROADS

SCALE: NA | SHEET NO. OF SHEETS | STA. TO STA.

F.A.I RTE.	SECTION	COUNTY	TOTAL SHEETS	SHEET NO.
74	(81-1)R & 81-1)HVBR	ROCK ISLAND	1504	55

CONTRACT NO. 64C08

ILLINOIS FED. AID PROJECT

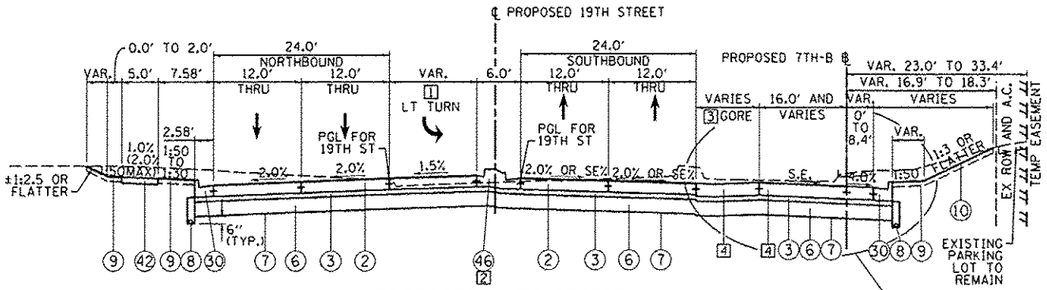

PROPOSED 19TH STREET

STA 1913+20.25 TO STA 1915+96.34

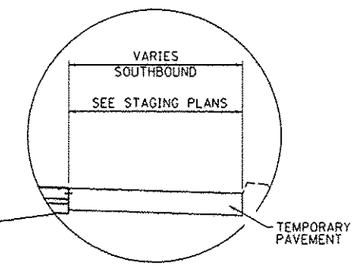

ALTERNATE RIGHT ROADSIDE

STA 1915+11.98 TO STA 1915+96.34

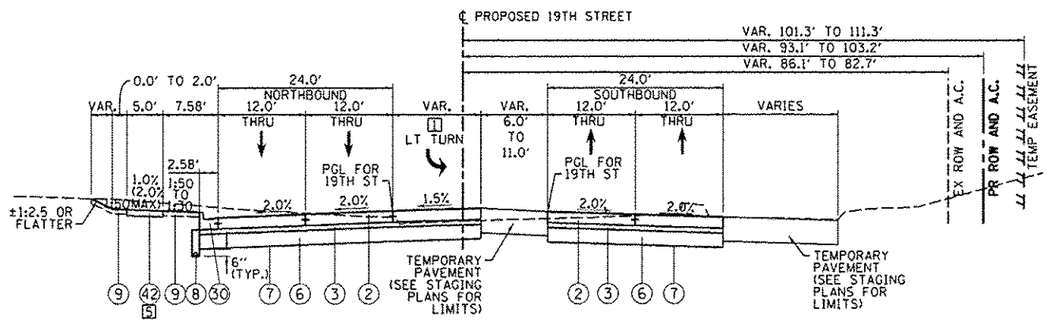

PROPOSED 19TH STREET

STA 1915+96.34 TO STA 1917+43.85

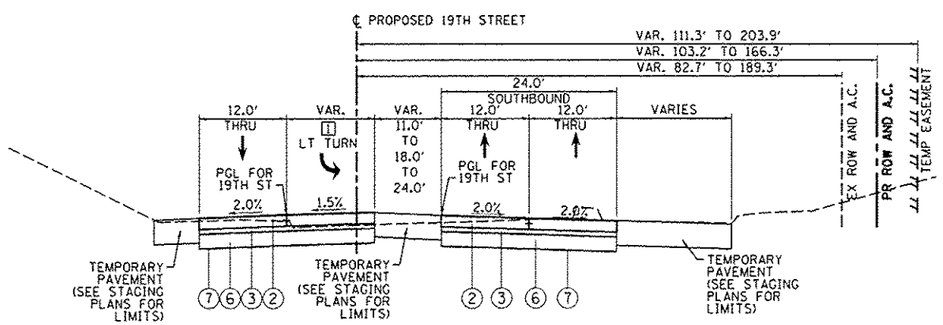

PROPOSED 19TH STREET

STA 1917+43.85 TO STA 1919+22.55(NB)/1920+29.63(SB)

1. LEFT TURN LANE WIDTH
   STA 1913+20.25 TO STA 1916+71.35 = 12.00'
   STA 1916+71.35 TO STA 1918+46.35 = 12.00' TO 0.00'
2. MEDIAN SHALL BE PAID FOR ACCORDING TO THE FOLLOWING:
   STA 1913+20.25 TO STA 1915+96.34 = 46 WHICH SHALL INCLUDE THE CONSTRUCTION OF B-6.12 C&G FOR NB AND B-6.24 C&G FOR SB
3. GORE WIDTH
   STA 1913+20.25 TO STA 1913+72.67 = 0.00' TO 4.00'
   STA 1913+72.67 TO STA 1915+11.98 = 4.00' TO 16.00'
4. PAVEMENT SHALL BE PAID FOR ACCORDING TO THE FOLLOWING:
   STA 1913+20.25 TO STA 1913+72.67 = 2
   STA 1913+72.67 TO STA 1915+11.98 = 1
5. SIDEWALK RECONSTRUCTION LIMITS:
   STA 1915+96.34 TO STA 1917+00.00

PROPOSED LEGEND:

1. PORTLAND CEMENT CONCRETE PAVEMENT 10 1/2" (JOINTED)
2. PORTLAND CEMENT CONCRETE PAVEMENT 9 1/4" (JOINTED)
3. STABILIZED SUBBASE 4"
4. BITUMINOUS MATERIALS (TACK COAT)
5. AGGREGATE SUBGRADE IMPROVEMENT 13 1/2"
6. AGGREGATE SUBGRADE IMPROVEMENT 12"
7. GEOTECHNICAL REINFORCEMENT
8. PIPE UNDERDRAINS, TYPE 2, 6"
9. TOPSOIL FURNISH AND PLACE, 4"
10. EROSION CONTROL BLANKET (SEE NOTE 8)
11. EMBANKMENT
12. AGGREGATE SHOULDERS, TYPE A 6"
13. CONCRETE BARRIER, SINGLE FACE, 42 INCH HEIGHT (SPECIAL)
14. CONCRETE BARRIER, DOUBLE FACE, 42 INCH HEIGHT
15. CONCRETE BARRIER TRANSITION (SPECIAL)
16. CONCRETE BARRIER BASE OR CONCRETE BARRIER BASE (SPECIAL)
17. STEEL PLATE BEAM GUARDRAIL, TYPE A, 6 FOOT POSTS
18. HOT-MIX ASPHALT SHOULDERS, 3" (FOR STABILIZATION AT SPBGR)
19. SUBBASE GRANULAR MATERIAL, TYPE A 9"
20. 1½" HOT-MIX ASPHALT SURFACE COURSE, MIX "C", N70
21. 2½" HOT-MIX ASPHALT BINDER COURSE, IL-19.0, N70
22. AGGREGATE BASE COURSE, TYPE A 6"
23. GEOTECHNICAL FABRIC FOR GROUND STABILIZATION
24. ANCHORAGE SLAB (SEE ANCHORAGE SLAB PLANS)
25. RETAINING WALL (SEE RETAINING WALL PLANS)
26. ANCHORAGE SLAB (SEE RETAINING WALL PLANS)
27. SELECT BACKFILL (SEE RETAINING WALL PLANS)
28. STEEL RAILING (SPECIAL) (SEE STRUCTURAL PLANS)
29. CONCRETE GUTTER, TYPE A (SPECIAL)
30. COMBINATION CONCRETE CURB AND GUTTER, TYPE B-6.24
31. COMBINATION CONCRETE CURB AND GUTTER, TYPE B-6.12
32. COMBINATION CONCRETE CURB AND GUTTER, TYPE M-6.24
33. COMBINATION CONCRETE CURB AND GUTTER, TYPE M-6.12
34. CONCRETE MEDIAN, TYPE SM (SPECIAL)
35. CONCRETE MEDIAN SURFACE, 4 INCH
36. CONCRETE MEDIAN, TYPE SM-6.18
37. CORRUGATED MEDIAN
38. 1½" POLYMERIZED HOT-MIX ASPHALT SURFACE COURSE, MIX "F", N50
39. 1" POLYMERIZED LEVELING BINDER (MACHINE METHOD), N50
40. 2½" HOT MIX ASPHALT SURFACE COURSE, MIX "C", N50
41. POLYMERIZED BITUMINOUS MATERIALS (TACK COAT)
42. PORTLAND CEMENT CONCRETE SIDEWALK 5 INCH
43. SEGMENTAL CONCRETE BLOCK WALL
44. PORTLAND CEMENT CONCRETE DRIVEWAY PAVEMENT, 7 INCH
45. CHAIN LINK FENCE, 4'
46. CONCRETE MEDIAN, TYPE SB (SPECIAL)
47. CONCRETE MEDIAN, TYPE SM-6.12

NOTES:

1. SEE ROADWAY PLANS FOR PAVEMENT WIDTH TRANSITION LOCATIONS.
2. SEE DRAINAGE PLANS FOR LOCATIONS OF PIPE UNDERDRAINS AND DRAINAGE STRUCTURES.
3. SEE PAVEMENT GORE DETAILS FOR LAYOUT AND SLOPE INFORMATION.
4. SEE CROSS SECTIONS FOR SIDE SLOPE AND DITCH DETAILS.
5. SEE RETAINING WALL PLANS FOR LOCATION AND DETAILS.
6. THE UNIT WEIGHT TO CALCULATE ALL HOT MIX ASPHALT SURFACE MIXTURES IS 112 LBS/SQ YD/IN FOR MIX C AND 123 LBS/SQ YD/IN FOR MIX F. APPLICATION RATE FOR TACK COAT IS 0.05 LB/SQ FT.
7. SEE JOINTING PLANS FOR TYPE AND LOCATIONS.
8. EROSION CONTROL BLANKET IS TO BE PLACED AS NEEDED ON SLOPES 1:3 AND FLATTER (TURF REINFORCEMENT ON STEEPER THAN 1:3) AND SHALL NOT BE PLACED ON FURROWED SLOPES. SEE EROSION AND SEDIMENT CONTROL SHEETS FOR LOCATIONS.
9. FOR SUPERELEVATION TRANSITIONS, SEE DETAIL SHEETS FOR MAINLINE OR PROFILE SHEETS FOR RAMPS AND LOCAL ROADS.
10. IF CURB AND GUTTER OR PCC PAVEMENT IS CONSTRUCTED AFTER OCTOBER 15TH AND THE ROAD WILL BE OPEN TO TRAFFIC PRIOR TO THE FOLLOWING APRIL 15TH, PROTECTIVE COAT SHALL BE USED.

TYP-15

LAYOUT	CBP	10/2/2014
DRAWN	MTH	10/2/2014
REVIEWED	AAP/KMA	12/30/2016

FILE NAME = 02CONAB-HPS-sht-typical16L.dgn	USER NAME = peth00954	DESIGNED - CBP	REVISED - 05/16/17
		DRAWN - MTH	REVISED -
	PLOT SCALE = NA	CHECKED - AAP/KMA	REVISED -
	PLOT DATE = 4/11/2017	DATE - 1/20/2017	REVISED -

STATE OF ILLINOIS
DEPARTMENT OF TRANSPORTATION

TYPICAL SECTIONS
PROPOSED
LOCAL ROADS

SCALE: NA | SHEET NO. OF SHEETS | STA. TO STA.

F.A.I. RTE.	SECTION	COUNTY	TOTAL SHEETS	SHEET NO.
74	(81-1)R & 81-1HVBR	ROCK ISLAND	1504	56
		CONTRACT NO. 64C08		
		ILLINOIS FED. AID PROJECT		

LOCATION				EARTH EXCAVATION (2020100)	EARTH EXCAVATION ADJUSTED FOR SHRINKAGE (25%)	EMBANKMENT	EARTHWORK BALANCE WASTE (+) OR SHORTAGE (-)	TOPSOIL FURNISH AND PLACE, 4" (21101615)	REMOVAL AND DISPOSAL OF UNSUITABLE MATERIAL (20201200)	ROCK FILL (Z0054500)	ROCK FILL (Z0054400)
MAINLINE I-74 AND RAMPS				CUBIC YARD	CUBIC YARD	CUBIC YARD	CUBIC YARD	SQUARE YARD	CUBIC YARD	TON	CUBIC YARD
I-74 MAINLINE STAGE 1											
STATION	23+85.31	TO	25+00.00	0.0	0.0	17,711.2	-17,711.2	63.3	10,110.7	9,666.2	0.0
STATION	25+00.00	TO	31+56.75	722.6	541.9	62,270.5	-61,728.5	515.3	11,513.1	9,892.1	0.0
SUB TOTAL				722.6	541.9	79,981.7	-79,439.7	578.6	21,623.8	19,558.3	0.0
RAMP RD-G STAGE 1											
STATION	128+59.81	TO	130+00.00	179.4	134.6	10,646.6	-10,512.0	1,705.8	4,937.8	3,700.7	0.0
STATION	130+00.00	TO	135+00.00	356.7	267.5	14,107.5	-13,840.0	2,988.9	2,020.4	1,723.8	0.0
STATION	135+00.00	TO	136+40.00	127.0	95.3	657.7	-562.4	522.1	0.0	0.0	0.0
SUB TOTAL				663.1	497.3	25,411.7	-24,914.3	5,216.8	6,958.2	5,424.5	0.0
RAMP RD-H STAGE 1											
STATION	210+80.00	TO	215+00.00	417.6	313.2	10,091.2	-9,778.1	2,520.4	511.5	96.2	0.0
STATION	215+00.00	TO	217+58.15	342.3	256.7	11,534.7	-11,278.0	1,834.6	8,885.5	10,421.9	236.7
SUB TOTAL				759.8	569.9	21,625.9	-21,056.1	4,355.0	9,397.0	10,518.1	236.7
RAMP 6TH-C STAGE 1											
STATION	330+04.18	TO	335+00.00	18.3	13.7	14,828.7	-14,815.0	1,103.0	0.0	0.0	0.0
STATION	335+00.00	TO	337+58.59	383.0	287.3	1,847.8	-1,560.5	0.0	0.0	0.0	0.0
RAMP 6TH-C STAGE 3											
STATION	330+60.00	TO	335+00.00	615.5	461.6	110.3	351.3	2,557.8	0.0	0.0	0.0
STATION	335+00.00	TO	337+58.59	894.2	670.6	259.2	411.5	2,120.5	0.0	0.0	0.0
SUB TOTAL				1,910.9	1,433.2	17,045.9	-15,612.7	5,781.3	0.0	0.0	0.0
RAMP 6TH-D STAGE 1											
STATION	420+58.16	TO	425+00.00	163.5	122.6	11,588.1	-11,465.4	1,530.6	0.0	0.0	0.0
STATION	425+00.00	TO	425+62.91	1.6	1.2	3,264.6	-3,263.4	177.3	0.0	0.0	0.0
SUB TOTAL				165.1	123.8	14,852.7	-14,728.8	1,708.0	0.0	0.0	0.0
FUTURE BIKE PATH @ MRB BRIDGE CONE STAGE 1											
STATION	7+60.00	TO	10+00.00	219.3	164.4	843.2	-678.8	1,130.7	0.0	0.0	0.0
STATION	10+00.00	TO	13+33.59	622.9	467.2	1,583.9	-1,116.7	689.0	0.0	0.0	0.0
SUB TOTAL				842.2	631.6	2,427.2	-1,795.5	1,819.7	0.0	0.0	0.0
TEMPORARY RAMP N-3 STAGE 1											
STATION	1067+09.56	TO	1071+30.10	185.3	139.0	1,149.4	-1,010.4	0.0	0.0	0.0	0.0
TEMPORARY RAMP N-3 STAGE 2											
STATION	1067+60.00	TO	1070+80.00	90.5	67.9	0.0	67.9	0.0	0.0	0.0	0.0
SUB TOTAL				185.3	139.0	1,149.4	-1,010.4	0.0	0.0	0.0	0.0
INFIELD BETWEEN RIVER DR. AND RAILROAD STAGE 1											
STATION	3+20.00	TO	9+40.00	8,456.4	6,342.3	472.7	5,869.6	5,274.5	0.0	0.0	0.0
INFIELD BETWEEN RIVER DR. AND RAILROAD STAGE 3											
STATION	1+20.00	TO	6+00.00	6,540.0	4,905.0	224.7	1,177.3	1,177.3	0.0	0.0	0.0
STATION	6+00.00	TO	11+15.00	6,430.0	4,822.5	2,296.9	0.0	3,768.3	0.0	0.0	0.0
SUB TOTAL				21,426.4	16,069.8	2,994.3	7,046.9	10,220.2	0.0	0.0	0.0
GRADING AREA (4TH AVE.\RAMP 6TH-D ABUT)											
STATION	3+66.79	TO	5+00.00	729.0	546.7	69.1	477.6	0.0	0.0	0.0	0.0
STATION	5+00.00	TO	8+57.16	561.0	420.7	1,023.6	-602.9	1,974.4	0.0	0.0	0.0
SUB TOTAL				1,289.9	967.4	1,092.7	-125.3	1,974.4	0.0	0.0	0.0
GRADING AREA BETWEEN 6TH AND 7TH STAGE 2											
STATION	6003+50.00	TO	6005+75	3,980.5	2,985.4	0.4	2,985.0	0.0	0.0	0.0	0.0
GRADING AREA BETWEEN 6TH AND 7TH STAGE 3											
STATION	6003+07.07	TO	6005+00	4,806.9	3,605.2	302.4	3,302.8	1,760.6	0.0	0.0	0.0
SUB TOTAL				8,787.4	6,590.5	302.8	6,287.8	1,760.6	0.0	0.0	0.0
TOTAL MAINLINE, RAMPS AND GRADING				36,755	27,565	166,885	-145,350	33,415	37,980	35,501	240

NOTE:
CROSS SECTIONS ARE SHEETED AT 25' INTERVALS.
EARTHWORK END AREA QUANTITIES BASED ON 10' INTERVAL
CROSS SECTIONS TO PROVIDE A MORE ACCURATE ESTIMATE.

LAYOUT	CBP	11/26/2014
DRAWN	CBP	11/26/2014
REVIEWED	AAP	11/26/2014

FILE NAME = D2CONAB-HPS-sht-schedule001.dgn
USER NAME = peshe00954
PLOT SCALE =
PLOT DATE = 5/22/2017
DESIGNED - CBP
DRAWN - CBP
CHECKED - AAP
DATE - 1/20/2017
REVISED - 05/16/17
REVISED -
REVISED -
REVISED -

STATE OF ILLINOIS
DEPARTMENT OF TRANSPORTATION

SCHEDULE OF QUANTITIES

SCALE: SHEET NO. OF SHEETS STA. TO STA.

SCHQ-01

F.A.I RTE.	SECTION	COUNTY	TOTAL SHEETS	SHEET NO.
74	(81-1)R & 81-1HVBR	ROCK ISLAND	1504	58

CONTRACT NO. 64C08
ILLINOIS FED. AID PROJECT

LOCATION	EARTH EXCAVATION (2020100)	EARTH EXCAVATION ADJUSTED FOR SHRINKAGE (25%)	EMBANKMENT	EARTHWORK BALANCE WASTE (+) OR SHORTAGE (-)	TOPSOIL FURNISH AND PLACE, 4" (21101615)	REMOVAL AND DISPOSAL OF UNSUITABLE MATERIAL (20201200)
LOCAL ROADS	CUBIC YARD	CUBIC YARD	CUBIC YARD	CUBIC YARD	SQUARE YARD	CUBIC YARD
21ST STREET NORTH						
STATION 9+40.00 TO 13+37.38						
STAGE 1 SUB 1	968.2	726.1	32.3	693.8	412.6	0.0
SUB TOTAL	**968.2**	**726.1**	**32.3**	**693.8**	**412.6**	**0.0**
21ST STREET SOUTH						
STATION 7+00.00 TO 8+86.85						
STAGE 1 SUB 1	1,249.7	937.3	38.6	898.6	585.9	0.0
SUB TOTAL	**1,249.7**	**937.3**	**38.6**	**898.6**	**585.9**	**0.0**
WEST TURN-AROUND (ALLEY BETWEEN 5TH AVE AND 6TH AVE)						
STAGE 1 SUB 1	15.0	11.3	95.0	-83.8	130.0	0.0
SUB TOTAL	**15.0**	**11.3**	**95.0**	**-83.8**	**130.0**	**0.0**
6TH AVENUE YEAR 2						
STATION 6004+50.00 TO 6009+20.00	445.1	333.9	2,838.2	-2,504.4	530.9	0.0
6TH AVENUE YEAR 3						
STATION 6000+29.00 TO 6005+10.00	265.9	199.4	3,160.1	-2,960.7	712.0	0.0
SUB TOTAL	**711.1**	**533.3**	**5,998.3**	**-5,465.0**	**1,242.9**	**0.0**
7TH AVENUE PRE-STAGE 1						
STATION 7012+15.5 TO 7017+03.00	336.9	252.6	0.1	252.5	0.0	0.0
STATION 7017+34.15 TO 7022+58.49	341.4	256.1	0.0	256.1	0.0	0.0
7TH AVENUE PRE-STAGE 2						
STATION 7004+20.00 TO 7008+00.00	2,431.5	1,823.6	4.6	1,819.0	325.8	0.0
STATION 7008+00.00 TO 7012+19.56	2,611.8	1,958.8	171.6	1,787.2	771.7	0.0
7TH AVENUE STAGE 1 SUB 0						
STATION 7012+24.68 TO 7013+02.12	287.0	215.3	0.0	215.3	0.0	0.0
7TH AVENUE STAGE 1 SUB 1						
STATION 7013+02.12 TO 7017+03.00	998.2	748.7	0.4	748.3	173.2	0.0
7TH AVENUE STAGE 1 SUB 2						
STATION 7011+60.00 TO 7013+47.12	454.6	340.9	8.2	332.8	0.0	0.0
7TH AVENUE STAGE 1 SUB 3						
STATION 7012+74.90 TO 7017+03.00	896.0	672.0	21.4	650.6	307.8	0.0
7TH AVENUE STAGE 1 SUB 4						
STATION 7011+28.19 TO 7013+10.00	301.8	226.4	123.1	103.3	469.6	0.0
7TH AVENUE STAGE 1 SUB 5						
STATION 7008+49.91 TO 7011+60.00	40.8	30.6	6.1	24.6	0.0	0.0
STATION 7011+60.00 TO 7017+03.00	481.1	360.8	286.5	74.4	0.0	0.0
STATION 7017+32.90 TO 7022+58.66	146.2	109.6	137.3	-27.6	0.0	0.0
7TH AVENUE STAGE 2 SUB 1						
STATION 7013+20.64 TO 7013+88.44	11.0	8.2	25.6	-17.3	0.0	0.0
7TH AVENUE STAGE 3 SUB 1						
STATION 7009+90.00 TO 7011+28.13	16.0	12.0	208.6	-196.7	452.7	0.0
7TH AVENUE STAGE 3 SUB 2						
STATION 7010+61.96 TO 7013+25.10	43.9	32.9	38.5	-5.6	48.2	0.0
SUB TOTAL	**9,398.1**	**7,048.6**	**1,031.7**	**6,016.8**	**2,548.9**	**0.0**

NOTE:
CROSS SECTIONS ARE SHEETED AT 25' INTERVALS.
EARTHWORK END AREA QUANTITIES BASED ON 10' INTERVAL CROSS SECTIONS TO PROVIDE A MORE ACCURATE ESTIMATE.

HANSON

LAYOUT	CBP	11/26/2014
DRAWN	CBP	11/26/2014
REVIEWED	AAP	11/26/2014

FILE NAME = 02CONAB-HPS-sht-schedule001.dgn
USER NAME = peteo00954
PLOT SCALE =
PLOT DATE = 5/22/2017
DESIGNED - CBP
DRAWN - CBP
CHECKED - AAP
DATE - 1/20/2017
REVISED - 05/16/17
REVISED -
REVISED -
REVISED -

STATE OF ILLINOIS
DEPARTMENT OF TRANSPORTATION

SCHEDULE OF QUANTITIES

SCALE: SHEET NO. OF SHEETS STA. TO STA.

SCHO-02

F.A.I. RTE.	SECTION	COUNTY	TOTAL SHEETS	SHEET NO.
74	(81-1)R & 81-1HVBR	ROCK ISLAND	1504	59

CONTRACT NO. 64C08
ILLINOIS FED. AID PROJECT

LOCATION				EARTH EXCAVATION (2020100)	EARTH EXCAVATION ADJUSTED FOR SHRINKAGE (25%)	EMBANKMENT	EARTHWORK BALANCE WASTE (+) OR SHORTAGE (-)	TOPSOIL FURNISH AND PLACE, 4" (21101615)	REMOVAL AND DISPOSAL OF UNSUITABLE MATERIAL (20201200)
LOCAL ROADS				CUBIC YARD	CUBIC YARD	CUBIC YARD	CUBIC YARD	SQUARE YARD	CUBIC YARD
19TH STREET PRE-STAGE 2									
STATION	1908+69.72	TO	1911+35.00	719.8	539.9	6.6	533.3	184.0	0.0
STATION	1913+20.00	TO	1920+00.00	2,787.5	2,090.6	225.9	1,864.8	677.7	0.0
STATION	1920+00.00	TO	1925+34.65	241.6	181.2	21.0	160.2	0.0	0.0
STATION	1926+26.00	TO	1928+28.50	204.2	153.2	0.0	153.2	0.0	0.0
19TH STREET STAGE 3									
STATION	1909+99.92	TO	1909+70.00	3.6	2.7	2.4	0.2	0.0	0.0
SUB TOTAL				3,956.8	2,967.6	255.9	2,711.7	861.6	0.0
CONNECTOR (Ramp 7th A) STAGE 1									
STATION	644+09.3	TO	646+76.05	480.0	360.0	0.0	360.0	0.0	0.0
CONNECTOR (Ramp 7th A) STAGE 2									
STATION	644+09.3	TO	644+17.88	3,150.7	2,363.0	0.0	2,363.0	393.3	0.0
SUB TOTAL				3,630.7	2,723.0	0.0	2,723.0	393.3	0.0
RIVER DRIVE MEDIAN									
STATION	3016+00.86	TO	3020.55	81.9	61.4	352.5	-291.1	0.0	0.0
SUB TOTAL				81.9	61.4	352.5	-291.1	0.0	0.0
BUILDING REMOVAL NO. 2 (NOT COVERED BY CROSS SECTIONS)									
				35.0	26.3	0.0	26.3	1,447.0	0.0
SUB TOTAL				35.0	26.3	0.0	26.3	1,447.0	0.0
601 21ST ST & 2001 7TH AVE (NOT COVERED BY CROSS SECTIONS)									
				220.0	165.0	150.0	15.0	3,321.0	0.0
SUB TOTAL				220.0	165.0	150.0	15.0	3,321.0	0.0
TOTAL LOCAL ROADS				20,270	15,200	7,955	7,250	10,943	0

EARTHWORK SUMMARY

PAY ITEM NO.	DESCRIPTION	UNIT	QUANTITY	ALLOWANCE
20200100	EARTH EXCAVATION	CU YD	57,025	
20201200	REMOVAL AND DISPOSAL OF UNSUITABLE MATERIAL	CU YD	37,980	53,710
20400100	BORROW EXCAVATION	CU YD	145,350	35,580
21101615	TOPSOIL FURNISH AND PLACE, 4"	SQ YD	44,358	
Z0054400	ROCK FILL	CU YD	240	
Z0054500	ROCK FILL	TON	35,501	33,539

(SEE BILL OF MATERIALS ON RETAINING WALL SHEETS AND DRAINAGE DETAILS FOR ADDITIONAL QUANTITY)

NOTES:
CROSS SECTIONS ARE SHEETED AT 25' INTERVALS. EARTHWORK END AREA QUANTITIES BASED ON 10' INTERVAL CROSS SECTIONS TO PROVIDE A MORE ACCURATE ESTIMATE.

QUANTITY FOR REMOVAL AND DISPOSAL OF UNSUITABLE MATERIAL, BORROW EXCAVATION, AND ROCK FILL INCLUDES AN ALLOWANCE QUANTITY. THIS ALLOWANCE IS FOR THE PURPOSE OF ADDITIONAL REMOVAL AND DISPOSAL OF UNSUITABLE MATERIAL THAT MAY BE ENCOUNTERED DURING EXCAVATION, AS DETERMINED BY THE ENGINEER. MAXIMUM LIMITS OF THE ADDITIONAL EXCAVATION IS SHOWN ON THE CROSS SECTIONS FOR REFERENCE.

HANSON

LAYOUT	CBP	11/26/2014
DRAWN	CBP	11/26/2014
REVIEWED	AAP	11/26/2014

FILE NAME = D2CONAB-HPS-sht-schedule801.dgn
USER NAME = petke80154
PLOT SCALE =
PLOT DATE = 5/22/2017
DESIGNED - CBP
DRAWN - CBP
CHECKED - AAP
DATE - 1/20/2017
REVISED - 05/16/17
REVISED -
REVISED -
REVISED -

STATE OF ILLINOIS
DEPARTMENT OF TRANSPORTATION

SCHEDULE OF QUANTITIES

SCALE: SHEET NO. OF SHEETS STA. TO STA.

F.A.I RTE.	SECTION	COUNTY	TOTAL SHEETS	SHEET NO.
74	(81-1)R & 81-1)HVBR	ROCK ISLAND	1504	60
		CONTRACT NO. 64C08		
		ILLINOIS FED. AID PROJECT		

SCH0-03

28000510
INLET FILTERS

STRUCTURE	STA	OFFSET	--	STRUCTURE	STA	OFFSET	EACH
A13a	10+73.27	16.74' LT	--	A09	646+12.74	39.50' LT	2
A13c	10+95.59	11.93' LT	--	A10	646+21.89	6.00' LT	2
A12b	12+98.59	22.86' LT	--	A11	646+21.89	0.00' LT	2
A12c	13+07.13	20.12' RT	--	A11a	646+21.89	36.00' RT	2
D5	25+43.14	70.43' LT	--	N8	332+25.82	75.73' RT	2
D6	25+43.14	74.00' RT	--	EX INLET	1910+87.58	37.01' RT	2
D7	25+58.14	74.00' RT	--	EX INLET	1911+43.09	68.64'RT	2
D8	25+73.14	74.00' RT	--	EX INLET	6000+34.31	39.88' RT	2
D9	25+43.14	0.00' RT	--	N09	6003+66.67	24.00' LT	3
D10	25+58.14	0.00' RT	--	N10	6003+66.67	12.00' RT	3
D11	25+73.14	0.00' RT	--	N11	6003+00.00	24.00' LT	3
D15	25+58.14	70.54' LT	--	N12	6003+00.00	12.00' RT	2
D16	25+73.14	70.66' LT	--	A08	6006+00.57	24.00' LT	2
D21	26+13.14	74.00' RT	--	A14a	6008+00.05	20.00' LT	2
D22	26+13.14	0.00' RT	--	A14b	6008+00.55	13.94' RT	3
D23	26+13.14	71.14' LT	--	D1	6746+75.00	73.98' RT	2
D18	26+73.43	74.00' RT	--	D2	6746+75.00	1.52' RT	2
D12	28+50.00	79.83' RT	--	D3	6746+75.00	5.06' LT	2
D13	28+50.00	0.00' RT	--	D4	6746+75.00	69.94' LT	3
D14	28+50.00	75.33' LT	--	EX INLET	7006+30.59	9.51' LT	2
C1	128+98.00	23.69' RT	--	N55	7010+22.56	48.00' RT	2
C2	128+98.00	7.00' RT	--	N54	7010+30.44	54.00' LT	2
C18	128+98.00	22.00' LT	--	A03	7011+50.66	4.34' RT	2
C14	129+80.00	116.75' RT	--	A06	7012+25.00	3.93' LT	2
C19	130+16.00	22.00' LT	--	A04	7012+25.00	58.29' LT	2
C3	130+16.00	8.08' RT	--	A05	7012+63.32	48.00' RT	2
C25	130+90.00	85.27' RT	--	A02	7013+79.55	0.00' RT	2
C24	131+50.00	22.00' LT	--	EX INLET	7013+80.36	60.78' RT	2
C13	132+10.00	63.93' RT	--	N18	7015+20.00	52.80' LT	2
C4	132+48.91	40.33' RT	--	N14	7015+25.00	38.37' RT	2
C5	132+50.00	23.77' RT	--	N15	7015+25.00	0.00' RT	2
C12	132+87.33	63.33' RT	--	N16	7016+75.00	0.00' RT	2
C6	134+40.00	47.69' RT	--	EX MH	7016+85.91	40.00' LT	2
C7	134+40.00	31.00' RT	--	EX MH	7016+88.12	37.54' RT	2
C21	133+78.13	30.00' LT	--	A14d	7+27.60	14.41' RT	2
C22	135+25.00	30.00' LT	--	A14f	7+33.69	35.40' LT	2
C17	135+25.00	31.00' RT	--	A14c	8+36.85	42.00' RT	2
C20	135+58.13	22.00' LT	--	A14e	8+36.85	42.00' LT	2
C23	135+79.00	30.00' LT	--	D27a	211+10.75	30.09' RT	2
C10	136+01.23	32.44' RT	--	S15a	35+21.14	9.74' RT	2
D27	211+28.00	22.00' LT	--	EX INLET	429+70.73	119.73' RT	2
B47	212+70.00	16.00' RT	--	EX INLET	430+05.06	136.63' RT	2
D26	212+70.00	22.00' LT	--	EX INLET	430+43.50	141.63' RT	2
D25	213+32.00	22.00' LT	--	EX INLET	7004+31.64	40.00' LT	2
D24	214+32.00	22.00' LT	--	A16c	1069.90.00	12.88' LT	2
D17	215+32.00	22.00' LT	--	A16d	1069+55.00	12.88' LT	2
B49	215+50.00	14.55' RT	--	A16e	1069+20.00	12.88' LT	2
B53	331+35.36	25.68' LT	--	A17a	1067+53.70	24.26' LT	2
S28	332+65.00	7.93' RT	--	N17	7016+85.79	1.01' RT	2
T15	334+00.00	26.90' LT	--	N17a	7018+60.03	2.82' RT	2
T16	334+00.00	8.00' RT	--	E13	1913+91.14	60.64' RT	2
A46	334+80.53	240.83' RT	--	E13a	1913+83.93	35.16' RT	2
T17	336+25.00	39.07' LT	--	E14	1913+27.34	56.00' RT	2
T18	336+25.00	8.00' RT	--	EX INLET	1908+97.65	36.55' LT	2
T20	337+22.04	8.00' RT	--	N20b	1910+86.37	33.24' LT	2
B61 (EX)	325+05.12	67.27' RT		N21	1913+25.00	9.00' RT	2
B62 (EX)	325+14.69	19.08' RT		N21a	1913+25.00	3.00' RT	2
B57	421+76.73	16.00' RT		N22	1913+50.00	9.00' RT	2
B56	425+16.70	8.63' RT		N25	1915+41.61	33.00' LT	2
B55	425+17.46	22.03' LT		N26	1915+41.61	33.00' RT	2
EX INLET	1922+58.82	37.07' RT		N27	1917+00.00	33.00' RT	2
EX INLET	1922+88.83	17.16' LT		N28a	1917+00.00	33.00' LT	2
EX INLET	1922+91.16	24.54' RT		EX INLET	1928+91.04	35.33' LT	2
EX INLET	1925+36.61	32.75' LT		EX INLET	1931+78.02	29.07 LT	2
EX INLET	403+41.56	15.47' LT		EX INLET	407+03.97	13.71' LT	2
EX INLET	403+40.91	18.87' RT		EX INLET	407+00.40	13.80' RT	2
EX INLET	407+00.25	13.71' LT		EX INLET	407+04.38	13.80' RT	2
						TOTAL	139

28100109
STONE RIPRAP, CLASS A5

ALIGNMENT	STR	STA	OFFSET	RT/LT	-	-	SQ YD
PR RD-G	C16 (slope)	127+52.48	151.11	RT	–	–	45
PR RD-H	A45 (slope)	219+14.51	27.45	RT	–	–	75
						TOTAL	120

28200200
FILTER FABRIC

ALIGNMENT	STR	STA	O/S	RT/LT	-	-	SQ YD
PR RD-G	C16 (slope)	127+52.48	151.11	RT	--	--	45
PR RD-H	A45 (slope)	219+14.51	27.45	RT	--	--	75
						TOTAL	120

28500200
PRECAST BLOCK REVETMENT MAT

ALIGNMENT	STA	OFFSET	LT/RT				SQ YD
PR 6TH-D	421+00.00	30.00	LT				4
I-74 (IA STA)	6748+25	0.00	C				1,760
						TOTAL	1,764

30300001
AGGREGATE SUBGRADE IMPROVEMENT

ALIGNMENT	STA FROM			STA TO	SQ YD	DEPTH (IN)	CU YD
EX 4TH AVE	402+25			410+00	49	6	8
NOTE: EXACT LOCATIONS TO BE DETERMINED DURING RESURFACING AND APPROVED BY THE ENGINEER							
PR 7TH AVE	7012+50			7016+60	75	6	13
PR 19TH ST	1922+38			1924+53	117	6	20
						TOTAL	41

30300011
AGGREGATE SUBGRADE IMPROVEMENT

							TON
AS DIRECTED BY ENGINEER							2,000
						TOTAL	2,000

30300112
AGGREGATE SUBGRADE IMPROVEMENT 12"

ALIGNMENT	STA FR			STA TO		SQ FT	SQ YD
PR RD-G	128+92.81			136+34.28		40,965	4,552
PR RD-H	210+75.48			217+25.15		28,645	3,183
PR 6TH-C	331+16.00			337+58.59		29,536	3,282
PR 6TH-D	420+58.16			425+29.91		17,626	1,958
21ST ST N	10+00.00			13+37.40		16,745	1,861
6TH AVE	6000+29.00			6009+20.00		38,210	4,246
7TH AVE	7004+20.00			7017+03.00		132,241	14,693
CONNECTOR	643+85.21			646+94.29		28,622	3,180
19TH ST	1909+70.00			1911+64.12		17,792	1,977
19TH ST	1913+20.25			1920+29.63		43,942	4,882
						TOTAL	43,814

#2000321
AGGREGATE SUBGRADE IMPROVEMENT 13 1/2"

ALIGNMENT	STA FR	(STA IOWA)		STA TO		SQ FT	SQ YD
PR I-74	24+18.31	(6746+83.75)		28+92.85		36,177	4,020
PR I-74	24+18.31	(6746+83.75)		29+15.53		37,489	4,165
						TOTAL	8,185

30300124
AGGREGATE SUBGRADE IMPROVEMENT 24"

ALIGNMENT	STA FR			STA TO		SQ FT	SQ YD
21ST ST S	7+00.00			8+36.85		10,487	1,165
						TOTAL	1,165

LAYOUT	CBP	11/26/2014
DRAWN	CBP	11/26/2014
REVIEWED	AAP	11/26/2014

FILE NAME = D2CONAB-HPS-sht-schedule001.dgn

USER NAME = heato01447 | PLOT SCALE = | PLOT DATE = 5/25/2017

DESIGNED - CBP | DRAWN - CBP | CHECKED - AAP | DATE - 1/20/2017

REVISED - 1 05/16/17 | REVISED - | REVISED - | REVISED -

STATE OF ILLINOIS
DEPARTMENT OF TRANSPORTATION

SCHEDULE OF QUANTITIES

SCALE: | SHEET NO. OF SHEETS | STA. TO STA.

SCHQ-06

F.A.I RTE.	SECTION	COUNTY	TOTAL SHEETS	SHEET NO.
74	(81-1)R & 81-1HVBR	ROCK ISLAND	1504	63

CONTRACT NO. 64C08

ILLINOIS FED. AID PROJECT

31100800
SUBBASE GRANULAR MATERIAL, TYPE A 9"

ALIGNMENT	STA FR	LT/RT	STA TO	SQ FT			SQ YD
PR RD-H	211+63.59	RT	212+50.88	302			34
PR RD-H	215+49.70	LT	217+15.18	581			65
6TH-D	421+72.77	RT	422+59.98	303			34
6TH-D	423+63.23	LT	425+13.01	505			56
(USED FOR GUARDRAIL STABILIZATION ONLY)						TOTAL	189

31200100
STABILIZED SUBBASE 4"

ALIGNMENT	STA FR		STA TO		SQ FT	SQ YD
PR I-74	6746+83.75	24+18.31	28+92.85		33,616	3,735
PR I-74	6746+83.75	24+18.31	29+15.53		34,329	3,814
PR RD-G	128+92.81		136+34.28		39,211	4,357
PR RD-H	210+75.48		217+25.15		23,969	2,663
PR 6TH-C	331+16.00		337+58.59		22,117	2,457
PR 6TH-D	420+58.16		425+29.91		14,712	1,635
21ST ST N	10+00.00		13+37.40		16,225	1,803
21ST ST S	7+00.00		8+36.85		10,192	1,132
6TH AVE	6000+29.00		6009+20.00		37,292	4,144
7TH AVE	7004+20.00		7017+03.00		130,161	14,462
CONNECTOR	643+85.21		646+94.29		27,957	3,106
19TH ST	1909+70.00		1911+64.12		17,461	1,940
19TH ST	1913+20.25		1920+29.63		43,548	4,839
					TOTAL	50,087

35100300
AGGREGATE BASE COURSE, TYPE A 4"

ALIGNMENT	STA FR		STA TO	SQ FT			SQ YD
TEMP PATH	10+55.00		11+98.57	1,390			155
						TOTAL	155

35100500
AGGREGATE BASE COURSE, TYPE A 6"

ALIGNMENT	STA	TO	STA	SQ FT		SQ YD
SHARED-USE PATH ALONG PR RD-G	11+32.31		18+61.26	10,102		1,122
SHARED-USE PATH UNDER PR I-74	0+00.00		19+88.62	24,110		2,679
SHARED-USE PATH ALONG RIVER DR	3006+40.00		3007+10.00	2,316		257
					TOTAL	4,059

40600290
BITUMINOUS MATERIALS (TACK COAT)

ALIGNMENT	STA FR	STA TO	SQ FT		# APPLICATIONS	RATE (POUNDS/SQFT)	POUND
SHARED-USE PATH ALONG PR RD-G	11+32.31	18+61.26	10,102		1	0.05	505
SHARED-USE PATH UNDER PR I-74	0+00.00	19+88.62	21,123		1	0.05	1,056
EX 4TH AVE	402+25.00	410+00.00	3,100		1	0.05	155
						TOTAL	1,716

40600295
POLYMERIZED BITUMINOUS MATERIALS (TACK COAT)

ALIGNMENT	STA FR	STA TO	SQ FT		# APPLICATIONS	RATE (LBS/SQ FT)	POUND
EX 4TH AVE	402+25.00	410+00.00	22,323		2	0.05	2,232
						TOTAL	2,232

40600825
POLYMERIZED LEVELING BINDER (MACHINE METHOD), N50

ALIGNMENT	STA FR		STA TO	SQ FT	SQ YD	UNIT WT (lb/sy-in)	TON
EX 4TH AVE	402+25.00		410+00.00	22,323	2,480	123	153
COMMENT: DEPTH 1"							
						TOTAL	153

40600985
PORTLAND CEMENT CONCRETE SURFACE REMOVAL - BUTT JOINT

ALIGNMENT	STA FR		STA TO		SQ FT	SQ YD
21ST ST S	5+70.00		7+00.00		3,380	376
					TOTAL	376

40603085
HOT-MIX ASPHALT BINDER COURSE, IL-19.0, N70

ALIGNMENT	STA FR	STA TO	SQ FT	SQ YD	UNIT WT	DEPTH (IN)	TON
SHARED-USE PATH ALONG PR RD-G	11+32.31	18+61.26	10,102	1,122	112	2.50	157
SHARED-USE PATH UNDER PR I-74	0+00.00	19+88.62	21,123	2,347	112	2.50	329
SHARED-USE PATH ALONG RIVER DR	3006+40.00	3007+10.00	2,060	229	112	2.50	32
						TOTAL	518

40603310
HOT-MIX ASPHALT SURFACE COURSE, MIX "C", N50

ALIGNMENT	STA	TO	STA	SQ YD	UNIT WT	DEPTH (IN)	TON
EX 4TH AVE	402+25.00		410+00.00	345	112	2.5	49
TEMP SHARED USE PATH	10+55.00		11+98.57	155	112	2.0	18
						TOTAL	67

40603315
HOT-MIX ASPHALT SURFACE COURSE, MIX "C", N70

ALIGNMENT	STA FR	STA TO	SQ FT	SQ YD	UNIT WT	DEPTH (IN)	TON
SHARED-USE PATH ALONG PR RD-G	11+32.31	18+61.26	10,102	1,122	112	1.50	94
SHARED-USE PATH UNDER PR I-74	0+00.00	19+88.62	20,459	2,273	112	1.50	191
SHARED-USE PATH ALONG RIVER DR	3006+40.00	3007+10.00	2,003	223	112	1.50	19
						TOTAL	304

40603585
POLYMERIZED HOT-MIX ASPHALT SURFACE COURSE, MIX "F", N50

ALIGNMENT	STA FR		STA TO	SQ FT	SQ YD	UNIT WT	TON
EX 4TH AVE	402+25.00		410+00.00	22,323	2,480	123	229
(DEPTH 1.5")							
						TOTAL	229

42000060
WELDED WIRE REINFORCEMENT

ALIGNMENT	STA FROM			STA TO			SQ YD
EX 4TH AVE	402+25			410+00			145
NOTE: EXACT LOCATIONS TO BE DETERMINED DURING RESURFACING AND APPROVED BY THE ENGINEER							
PR 7TH AVE	7012+50			7016+60			375
PR 19TH ST	1922+54			1925+46			795
						TOTAL	1,315

42000080
PAVEMENT CONNECTOR (PCC) FOR BRIDGE APPROACH SLAB

ALIGNMENT	STA FROM	DIRECTION		STA TO	SQ FT		SQ YD
PR I-74	6746+86.75	WB		6746+58	1,622		180
PR I-74	6746+86.75	EB		6746+72	968		108
PR I-74	28+71	WB		29+07	1,741		193
PR I-74	28+91	EB		29+07	1,933		215
PR RD-G	128+90			129+14	555		62
PR RD-H	217+28			217+01	717		80
PR 6TH-C	331+13			331+43	667		74
PR 6TH-D	425+05			425+33	590		66
						TOTAL	978

LAYOUT	CBP	11/26/2014
DRAWN	CBP	11/26/2014
REVIEWED	AAP	11/26/2014

FILE NAME = 02CONAB-HPS-sht-schedule001.dgn
USER NAME = heato01447
PLOT SCALE =
PLOT DATE = 5/25/2017
DESIGNED - CBP
DRAWN - CBP
CHECKED - AAP
DATE - 1/20/2017
REVISED - 05/16/17
REVISED -
REVISED -
REVISED -

STATE OF ILLINOIS
DEPARTMENT OF TRANSPORTATION

SCHEDULE OF QUANTITIES

SCALE: SHEET NO. OF SHEETS STA. TO STA.

SCHQ-07

F.A.I RTE.	SECTION	COUNTY	TOTAL SHEETS	SHEET NO.
74	(81-1)R & 81-1)HVBR	ROCK ISLAND	1504	64

CONTRACT NO. 64C08
ILLINOIS FED. AID PROJECT

42000406

PORTLAND CEMENT CONCRETE PAVEMENT 9 1/4" (JOINTED)

ALIGNMENT	STA FR	STA TO	SQ FT	SQ YD
21ST ST N	10+00.00	13+37.40	14,735	1,637
21ST ST S	7+00.00	8+36.85	9,415	1,046
6TH AVE	6000+29.00	6009+20.00	33,306	3,701
CONNECTOR	643+85.21	646+94.29	22,446	2,494
7TH AVE	7004+20.00	7017+03.00	115,055	12,784
19TH ST	1909+70.00	1911+64.12	14,980	1,664
19TH ST	1913+20.25	1920+29.63	35707.0	3,967
			TOTAL	27,293

42000511

PORTLAND CEMENT CONCRETE PAVEMENT 10 1/2" (JOINTED)

ALIGNMENT	STA FROM	STA (IA)		STA TO		SQ FT	SQ YD
PR I-74	24+44	6746+58	LT	28+71	LT	25,722	2,858
PR I-74	24+30	6746+72	RT	28+91	RT	30,319	3,369
PR RD-G	129+14			136+34		29,768	3,308
PR RD-H	210+75			217+01		21,238	2,360
PR 6TH-C	331+43			337+58.59		21,320	2,369
PR 6TH-D	420+58			425+05		13,162	1,462
PR 19TH ST	1913+73			1915+10		4,565	507
						TOTAL	16,233

△1

42001300

PROTECTIVE COAT

ALIGNMENT	STA FROM		LT/RT	STA TO	LT/RT	SQ FT	SQ YD
PORTLAND CEMENT CONCRETE PAVEMENT 10 1/2" (JOINTED):							
PR I-74	6746+58	24+44	LT	28+71	LT	25,722	5,716
PR I-74	6746+72	24+30	RT	28+91	RT	30,319	6,738
PR RD-G	129+14			136+34		29,768	6,616
PR RD-H	210+75			217+01		21,238	4,720
PR 6TH-C	331+43			337+58.59		21,320	4,738
PR 6TH-D	420+58			425+05		13,162	2,926
PR 19TH ST	1913+73			1915+10		4,565	1,016
PORTLAND CEMENT CONCRETE PAVEMENT 9 1/4" (JOINTED)							
21ST ST N	10+00.00			13+37.40		14,735	3,274
21ST ST S	7+00.00			8+36.85		9,415	2,092
6TH AVE	6000+29.00			6009+20.00		33,306	7,401
CONNECTOR	643+85.21			646+94.29		22,446	4,988
7TH AVE	7004+20.00			7017+03.00		115,055	25,568
19TH ST	1909+70.00			1911+64.12		14,980	3,329
19TH ST	1913+20.25			1920+29.63		35,707	7,935
PAVEMENT CONNECTOR (PCC) FOR BRIDGE APPROACH SLAB							
PR I-74	6746+86.75	WB		6746+58		865	192
PR I-74	6746+86.75	EB		6746+72		986	220
PR I-74	28+71	WB		29+07		1,648	366
PR I-74	28+91	EB		29+07		1,848	410
PR RD-G	128+90			129+14		346	76
PR RD-H	217+28			217+01		409	90
PR 6TH-C	331+13			331+43		327	72
PR 6TH-D	425+05			425+33		398	88
COMBINATION CC&G, TYPE B-6.12						1,917	213
COMBINATION CC&G, TYPE B-6.24						16,806	1,867
COMBINATION CC&G, TYPE M-2.12						99	11
COMBINATION CC&G, TYPE M-6.12						923	103
COMBINATION CC&G, TYPE M-6.24						3,891	432
						TOTAL	91,198

△1

42300300

PORTLAND CEMENT CONCRETE DRIVEWAY PAVEMENT, 7 INCH

ALIGNMENT	STATION	LT/RT	SQ FT	SQ YD
21ST ST N	10+20.61	RT	202	22
21ST ST N	12+57.25	RT	494	55
5TH AVE	5001+70.80	LT	3,376	375
6TH AVE	6000+81.60	RT	686	76
6TH AVE	6001+36.20	RT	600	67
7TH AVE	7016+29.82	RT	1,325	147
19TH	1909+21.46	LT	355	39
19TH	1909+99.94	LT	378	42
19TH	1910+44.45	LT	294	33
ALLEY TURN AROUND BETWEEN 4TH & 5TH + SAN SEW PATCH			2,345	261
ALLEY TURN AROUND BETWEEN 5TH & 6TH			1,972	219
5TH AVE TEMPORARY DRIVEWAY		LT	1,215	135
			TOTAL	1,471

42400200

PORTLAND CEMENT CONCRETE SIDEWALK, 5 INCH

ALIGNMENT	STA	OFFSET	LT/RT	STA	OFFSET	LT/RT	SQ FT
21ST ST S	7+01.93	23.22'	LT	7+20.04	29.78'	LT	182.0
21ST ST S	7+01.93	27.74'	RT	7+14.82	27.24'	RT	70.5
21ST ST N	10+96.01	28.91'	RT	11+01.01	24.27'	RT	28.5
21ST ST N	11+21.95	24.11'	RT	11+26.95	28.97'	RT	29.0
21ST ST N	12+33.09	24.13'	RT	12+45.25	29.05'	RT	54.0
21ST ST N	12+69.25	29.12'	RT	13+37.40	29.55'	RT	228.0
21ST ST N	13+00.91	24.79'	LT	13+18.84	28.56'	LT	239.0
5TH AVE	5000+86.90	24.39'	LT	5001+33.29	58.46'	LT	401.0
6TH AVE	5999+28.96	37.89'	RT	5999+53.65	56.66'	RT	220.0
6TH AVE	6000+33.43	34.67'	LT	6006+18.85	36.58'	LT	3,725.0
6TH AVE	6000+38.84	46.88'	RT	6000+67.60	24.58'	RT	287.0
6TH AVE	6000+95.60	24.58'	RT	6001+24.20	24.58'	RT	119.0
6TH AVE	6001+48.20	24.58'	RT	6005+76.11	50.34'	RT	2,786.0
6TH AVE	6006+95.61	37.58'	LT	6008+50.00	32.81'	LT	775.5
6TH AVE	6007+05.41	34.95'	RT	6008+50.00	24.58'	RT	737.5
7TH AVE	7007+09.85	82.65'	RT	7007+35.49	88.24'	RT	160.5
7TH AVE	7007+10.95	80.36'	LT	7007+27.84	79.22'	LT	133.0
7TH AVE	7008+45.18	117.63'	RT	7012+74.88	60.58'	RT	3,006.0
7TH AVE	7013+47.77	62.72'	RT	7016+17.77	46.91'	RT	1,720.0
7TH AVE	7016+41.77	46.58'	RT	7017+03.90	45.73'	RT	353.5
19TH ST	1900+55.27	33.68'	LT	1900+96.36	38.29'	LT	201.0
19TH ST	1900+55.44	39.57'	RT	1900+89.86	39.57'	RT	164.0
19TH ST	1901+33.67	33.47'	RT	1901+49.09	33.16'	RT	274.5
19TH ST	1909+33.46	46.27'	LT	1909+87.04	46.08'	LT	244.0
19TH ST	1910+12.80	46.08'	LT	1910+35.45	46.08'	LT	89.5
19TH ST	1910+53.45	46.08'	LT	1911+43.68	65.80'	LT	512.0
19TH ST	1913+41.68	45.58'	LT	1917+00.00	45.58'	LT	1,841.0
						TOTAL	18,581.0

42400800

DETECTABLE WARNINGS

ALIGNMENT	STA	OFFSET	LT/RT	STA	OFFSET	LT/RT	SQ FT
PR 19TH ST	1900+55.44	40'	RT	1900+57.47	35'	RT	10
PR 19TH ST	1900+55.27	34'	LT	1900+57.32	39'	LT	10
PR 19TH ST	1900+85.11	35'	RT	1900+87.12	40'	RT	10
PR 19TH ST	1900+91.40	33'	LT	1900+93.78	38'	LT	10
PR 19TH ST	1901+34.02	33'	RT	1901+35.92	28'	RT	10
PR 19TH ST	1901+37.93	25'	RT	1901+42.96	27'	RT	10
PR 21ST ST S	7+01.93	15'	RT	7+09.08	17'	RT	9
PR 21ST ST S	7+02.51	21'	LT	7+06.29	15'	LT	14
PR 21ST ST N	12+79.84	21'	RT	12+98.61	21'	RT	11
PR 21ST ST N	13+00.91	25'	LT	13+03.69	27'	LT	11
PR 19TH ST	1908+78.25	7'	LT	1908+84.31	5'	LT	12
PR 19TH ST	1908+78.66	7'	RT	1908+84.57	4'	RT	12
PR 19TH ST	1908+92.26	56'	RT	1909+00.81	50'	RT	25
PR 19TH ST	1911+36.99	63'	RT	1911+42.10	66'	RT	12
PR 19TH ST	1911+38.08	63'	LT	1911+43.68	66'	LT	12
PR 19TH ST	1911+62.97	45'	LT	1911+69.62	48'	LT	12
PR 19TH ST	1911+65.46	38'	LT	1911+72.42	40'	LT	13
PR 19TH ST	1911+74.32	47'	LT	1911+77.13	42'	LT	12
PR 19TH ST	1912+98.20	72'	RT	1913+03.37	70'	RT	10
PR 19TH ST	1913+08.34	45'	LT	1913+13.69	44'	LT	10
PR 6TH AVE	6000+33.43	35'	LT	6000+43.82	29'	LT	28
PR 6TH AVE	6000+38.48	27'	RT	6000+46.48	21'	RT	19
PR 6TH AVE	6005+71.15	46'	RT	6005+76.11	50'	RT	12
PR 6TH AVE	6006+02.86	26'	RT	6006+06.94	30'	RT	12
PR 6TH AVE	6006+06.79	15'	RT	6006+12.79	17'	RT	12
PR 6TH AVE	6006+06.79	29'	LT	6006+12.79	27'	LT	12
PR 6TH AVE	6006+15.75	37'	LT	6006+17.75	32'	LT	10
PR 6TH AVE	6006+15.80	27'	RT	6006+19.09	21'	RT	12
PR 6TH AVE	6006+37.87	29'	RT	6006+41.78	23'	RT	12
PR 6TH AVE	6006+41.96	29'	RT	6006+45.86	24'	RT	12
PR 6TH AVE	6006+98.61	33'	LT	6007+00.61	38'	LT	10
PR 6TH AVE	6007+05.41	35'	RT	6007+18.54	32'	RT	25
PR 7TH AVE	7012+72.07	56'	RT	7012+74.07	61'	RT	10
PR 7TH AVE	7013+47.77	63'	RT	7013+56.67	60'	RT	18
PR 7TH AVE	7016+97.38	40'	RT	7016+99.46	46'	RT	12
						TOTAL	451

44000100

PAVEMENT REMOVAL

ALIGNMENT	STA FROM	STA TO	NOTES	SQ YD
EX RAMP 3-N	366+84.00	371+03.33		1,801
EX RAMP N-3	162+99.02	174+46.19		2,912
EX RIVER DR	3006+40.00	3008+10.00	SHARED USE PATH	219
EX RIVER DR	3016+00.87	3017+11.85		143
EX RIVER DR	3017+11.85	3020+45.69		362
EX 5TH AVE	5002+08.15	5006+02.51	PARKING LOT	9,428
EX 5TH AVE	5005+26.88	5006+64.87	C.E. FOR 400 21ST ST	701
EX 5TH AVE	5006+20.49	5007+73.14	ALLEY	266
EX 5TH AVE	5006+20.49	5006+56.87	PORTION OF 21ST ST N OF 5TH	904
EX 5TH AVE	5002+03.14	5004+64.17		1,212
EX 5TH AVE	5004+64.17	5006+84.59		1,005
EX 21ST ST	21+21.23	21+49.57		103
EX 21ST ST	21+49.57	24+63.21		943
EX 21ST ST	24+98.32	26+88.98		597
EX 21ST ST	22+90.00	22+90.00	ALLEY (12.5' RT TO 505' RT)	951
PR 6TH AVE	6000+29.00	6009+20.00		3,962
EX RAMP 7-N	73+87.86	76+29.39		835
EX RAMP N-7	73+58.99	75+99.91		1,118
PR 7TH AVE	7004+20.00	7017+03.00		14,372
PR 19TH AVE	1909+70.00	1911+57.97		1,461
PR 19TH AVE	1913+20.25	1920+75.00		4,341
PARKING LOT SOUTH OF 6TH AVENUE STA 6007+00				3,236
			TOTAL	50,872

44000159

HOT-MIX ASPHALT SURFACE REMOVAL, 2 1/2"

ALIGNMENT	STA FR	LT/RT	STA TO	SQ FT		SQ YD
EX 4TH AVE	402+25.00	LT	410+00.00	4,689	SHOULDER	521
EX 4TH AVE	402+25.00	LT	410+00.00	21,009	PAVEMENT	2,334
					TOTAL	2,855

HANSON

LAYOUT	CBP	11/26/2014
DRAWN	CBP	11/26/2014
REVIEWED	AAP	11/26/2014

SCHO-08

FILE NAME = D2CONAB-HPS-sht-schedule201.dgn	USER NAME = heato01447	DESIGNED - CBP	REVISED - △1 05/16/17	STATE OF ILLINOIS DEPARTMENT OF TRANSPORTATION
		DRAWN - CBP	REVISED -	
	PLOT SCALE =	CHECKED - AAP	REVISED -	
	PLOT DATE = 5/25/2017	DATE - 1/20/2017	REVISED -	

SCHEDULE OF QUANTITIES

SCALE: SHEET NO. OF SHEETS STA. TO STA.

F.A.I. RTE.	SECTION	COUNTY	TOTAL SHEETS	SHEET NO.
74	(81-1)R & 81-1)HVBR	ROCK ISLAND	1504	65
		CONTRACT NO. 64C08		
		ILLINOIS FED. AID PROJECT		

44000200
DRIVEWAY PAVEMENT REMOVAL

ALIGNMENT	STA	OFFSET	LT/RT	STA	OFFSET	LT/RT	SQ YD
EX 5TH AVE (TEMP DRVWY)	5000+87	13'	LT	5001+77	20'	LT	135
EX 5TH AVE	5003+92	22'	RT	5004+09	22'	RT	12
EX 5TH AVE	5005+12	22'	RT	5005+25	22'	RT	9
EX 5TH AVE	5005+73	22'	RT	5005+97	22'	RT	79
EX 21ST ST	21+25	22'	LT	21+67	13'	LT	55
EX 21ST ST	21+90	12'	RT	22+03	13'	RT	10
EX 21ST ST	22+98	244'	RT	23+45	189'	RT	166
EX 21ST ST	22+98	217'	RT	23+26	150'	RT	146
EX 21ST ST	22+99	105'	RT	23+26	93'	RT	39
EX 21ST ST	23+89	13'	RT	23+99	13'	RT	10
EX 21ST ST	23+90	13'	LT	24+03	12'	LT	11
EX 21ST ST	26+56	13'	RT	26+76	12'	RT	53
PR 6TH AVE	6000+61	16'	RT	6000+98	16'	RT	30
PR 6TH AVE	6001+17	16'	RT	6001+56	16'	RT	31
PR 6TH AVE	6006+75	16'	RT	6007+23	16'	RT	37
PR 7TH AVE	7016+13	37'	RT	7016+46	37'	RT	143
PR 19TH ST	1909+03	35'	LT	1909+40	35'	LT	35
PR 19TH ST	1909+80	35'	LT	1910+20	35'	LT	36
						TOTAL	1,037

44000500
COMBINATION CURB AND GUTTER REMOVAL

ALIGNMENT	STA FROM	OFFSET	LT/RT	STA TO	OFFSET	LT/RT	FOOT
EX RAMP 3-N	366+80.02	5'	LT	367+87.22	201'	LT	567
EX RAMP 3-N	369+13.05	34'	RT	371+05.10	42'	RT	218
EX RAMP N-3	163+00.17	21'	LT	174+37.57	38'	LT	1,070
EX RAMP N-3	162+98.74	5'	RT	174+42.47	74'	RT	1,190
EX 4TH AVE	405+12.96	22'	RT	406+95.84	165'	RT	361
EX 5TH AVE	5000+86.91	13'	LT	5001+32.65	35'	LT	408
EX 5TH AVE	5002+03.14	22'	RT	5005+40.41	22'	RT	338
EX 5TH AVE	5003+36.07	59'	LT	5006+12.62	181'	LT	958
EX 5TH AVE	5005+40.41	22'	RT	5006+23.51	46'	RT	99
EX 5TH AVE	5006+49.89	33'	LT	5006+84.58	21'	LT	43
EX 5TH AVE	5006+59.64	29'	RT	5006+84.58	21'	RT	31
EX 21ST ST	21+45.80	13'	RT	22+80.89	30'	RT	162
EX 21ST ST	21+59.44	24'	LT	22+80.80	24'	LT	136
EX 21ST ST	23+00.60	29'	RT	24+60.96	24'	RT	181
EX 21ST ST	23+00.75	29'	LT	24+63.61	27'	LT	195
EX 21ST ST	24+98.30	23'	LT	26+60.91	28'	LT	180
EX 21ST ST	25+00.59	28'	RT	26+60.72	18'	RT	175
EX 21ST ST	26+88.48	29'	RT	26+98.84	27'	LT	63
PR 6TH AVE	6000+32.81	36'	LT	6007+91.50	24'	LT	768
PR 6TH AVE	6000+34.14	42'	RT	6000+63.22	20'	RT	45
PR 6TH AVE	6000+97.94	16'	RT	6001+16.85	16'	RT	19
PR 6TH AVE	6001+55.85	16'	RT	6007+87.15	16'	RT	632
PR 6TH AVE	6008+42.45	21'	LT	6009+11.26	21'	LT	69
PR 6TH AVE	6008+38.38	13'	RT	6009+20.00	13'	RT	82
PR 19TH ST / 7TH AVE	1909+70 (19TH ST)	36'	RT	7004+20 (7TH AVE)	41'	LT	485
PR 7TH AVE	7005+39.78	57'	RT	7007+48.51	105'	RT	229
PR 7TH AVE	7008+25.83	98'	RT	7010+34.55	137'	RT	278
PR 7TH AVE	7010+93.93	165'	RT	7012+14.02	127'	RT	216
PR 7TH AVE	7012+83.13	152'	RT	7017+04.55	46'	RT	475
PR 19 TH ST / RAMP N-7	1908+99.94 (19TH ST)	36'	LT	73+64.65 (RAMP N-7)	5'	RT	740
RAMP N-7 / RAMP 7-N	73+61.60 (RAMP N-7)	32'	LT	73+93.54 (RAMP 7-N)	21'	RT	538
RAMP 7-N / 7TH AVE	73+87.75 (RAMP 7-N)	6'	LT	7016+83.39 (7TH AVE)	40'	LT	588
PR 19TH ST	1913+20.25	57'	RT	1920+75.00	52'	RT	744
PR 19TH ST	1913+20.25	23'	LT	1920+75.00	17'	LT	757
5TH AVE (TEMP DRWY)	5000+91.91	13'	LT	5001+32.15	20'	LT	42
5TH AVE (TEMP DRWY)	5000+86.91	14'	LT	5001+16.43	58'	LT	62
5TH AVE (TEMP DRWY)	5001+66.25	47'	LT	5001+76.84	20'	LT	43
						TOTAL	13,187

44000600
SIDEWALK REMOVAL

ALIGNMENT	STA	OFFSET	LT/RT	STA	OFFSET	LT/RT	SQ FT
EX 4TH AVE	399+60	19'	LT	399+65	53'	LT	160
EX 4TH AVE	399+62	24'	RT	399+75	46'	RT	275
EX 4TH AVE	400+33	15'	LT	400+39	54'	LT	197
EX 5TH AVE	5000+87	29'	LT	5002+91	29'	LT	1,863
EX 5TH AVE	5002+03	23'	RT	5003+95	30'	RT	1,159
EX 5TH AVE	5003+25	28'	LT	5006+15	28'	LT	1,705
EX 5TH AVE	5004+06	29'	RT	5005+14	30'	RT	798
EX 5TH AVE	5005+24	30'	RT	5005+73	30'	RT	574
EX 5TH AVE	5006+50	26'	LT	5006+66	26'	LT	82
EX 5TH AVE	5006+61	75'	LT	5006+66	31'	LT	236
EX 5TH AVE	5006+59	26'	RT	5006+85	30'	RT	194
EX 5TH AVE	5006+50	69'	RT	5006+66	69'	RT	121
EX 21ST ST	21+22	40'	RT	22+81	29'	RT	1,031
EX 21ST ST	23+01	29'	RT	24+52	29'	RT	835
EX 21ST ST	23+68	24'	LT	23+71	13'	LT	31
EX 21ST ST	24+20	24'	LT	24+24	13'	LT	53
EX 21ST ST	24+52	35'	LT	24+57	16'	LT	100
EX 21ST ST	24+98	29'	LT	25+09	34'	LT	140
EX 21ST ST	25+72	23'	LT	25+72	13'	LT	16
EX 21ST ST	26+48	28'	LT	26+61	23'	LT	60
EX 21ST ST	25+01	28'	RT	26+60	29'	RT	1,067
PR 6TH AVE	5999+29	38'	RT	5999+54	57'	RT	190
PR 6TH AVE	6000+33	33'	LT	6008+02	33'	LT	4,686
PR 6TH AVE	6000+44	52'	RT	6006+80	25'	RT	3,647
PR 6TH AVE	6007+15	24'	RT	6007+87	24'	RT	345
PR 7TH AVE	7007+11	80'	LT	7007+28	79'	LT	166
PR 7TH AVE	7007+10	83'	RT	7007+33	92'	RT	146
PR 7TH AVE	7013+97	163'	LT	7014+21	98'	LT	594
PR 7TH AVE	7014+35	69'	RT	7016+20	46'	RT	1,187
PR 7TH AVE	7015+80	155'	LT	7016+12	146'	LT	187
PR 7TH AVE	7016+40	46'	RT	7017+04	46'	RT	288
PR 19TH ST	1909+33	46'	LT	1909+87	46'	LT	260
PR 19TH ST	1910+13	46'	LT	1911+17	46'	LT	381
PR 19TH ST	1913+08	76'	RT	1915+10	73'	RT	986
						TOTAL	23,760

44003100
MEDIAN REMOVAL

ALIGNMENT	STA FROM	STA TO	SQ FT
EX RIVER DR	3016+20	3017+12	1,770
EX RIVER DR	3017+12	3020+71	2,516
PR 7TH AVE	7004+25	7007+52	4,454
PR 7TH AVE	7008+28	7011+38	8,300
PR 7TH AVE	7012+16	7014+08	1,810
PR 7TH AVE	7013+01	7017+00	2,729
PR 7TH AVE	7017+33	7022+59	9,060
PR 19TH ST	1908+76	1911+53	2,125
PR 19TH ST	1912+82	1913+20	280
PR 19TH ST	1913+20	1921+13	11,099
PR 19TH ST	1921+13	1925+34	3,929
PR 19TH ST	1926+00	1928+28	3,605
NOTE: MEDIAN REMOVAL INCLUDES THE REMOVAL OF ADJACENT COMB CURB GUTTER REM			
		TOTAL	51,677

44200934
CLASS B PATCHES, TYPE II, 8 INCH

ALIGNMENT	STA	STA	SQ YD
EX 4TH AVE	402+25.00	410+00.00	100
NOTE: EXACT LOCATIONS TO BE DETERMINED DURING RESURFACING AND APPROVED BY THE ENGINEER			
		TOTAL	100

44200942
CLASS B PATCHES, TYPE III, 8 INCH

ALIGNMENT	STA	STA	SQ YD
EX 4TH AVE	402+25.00	410+00.00	145
NOTE: EXACT LOCATIONS TO BE DETERMINED DURING RESURFACING AND APPROVED BY THE ENGINEER			
		TOTAL	145

44200976
CLASS B PATCHES, TYPE IV, 10 INCH

ALIGNMENT	STA	STA	SQ YD
7TH AVE	7012+50	7016+60	375
19TH ST	1922+38	1924+54	585
		TOTAL	960

44201294
CLASS B PATCH - EXPANSION JOINT

ALIGNMENT	STA FROM	STA TO	FOOT
EX 4TH AVE	402+25	410+00	75
NOTE: EXACT LOCATIONS TO BE DETERMINED DURING RESURFACING AND APPROVED BY THE ENGINEER			
7TH AVE	7012+50	7016+60	50
19TH ST	1922+38	1924+53	48
		TOTAL	173

44201296
DEFORMED BARS - EXPANSION JOINT

ALIGNMENT	STA FROM	STA TO	EACH
EX 4TH AVE	402+25	410+00	70
NOTE: EXACT LOCATIONS TO BE DETERMINED DURING RESURFACING AND APPROVED BY THE ENGINEER			
7TH AVE	7012+50	7016+75	45
19TH ST	1922+38	1924+53	45
		TOTAL	160

44201299
DOWEL BARS 1 1/2"

ALIGNMENT	STA	OFFSET	LT/RT	STA	OFFSET	LT/RT	EACH
DOWEL BARS FOR PATCH LOCATIONS:							
	ASSUMED 6 11' X 12' TYPE II PATCHES						120
	ASSUMED 6 18' X 12' TYPE III PATCHES						120
	ASSUMED 140' x 12.5' TYPE IV PATCH (7TH AVE)						90
	ASSUMED 140' x 11' TYPE IV PATCH (7TH AVE)						90
	ASSUMED 215' x 24' TYPE IV PATCH (19TH ST)						140
						TOTAL	560

44213200
SAW CUTS

ALIGNMENT	STA	OFFSET	LT/RT	STA	OFFSET	LT/RT	FOOT
SAW CUTS FOR PATCH LOCATIONS:							
	ASSUMED 6 11' X 12' TYPE II PATCHES						414
	ASSUMED 6 18' X 12' TYPE III PATCHES						540
	ASSUMED 140' x 12.5' TYPE IV PATCH (7TH AVE)						188
	ASSUMED 140' x 11' TYPE IV PATCH (7TH AVE)						202
	ASSUMED 215' x 24' TYPE IV PATCH (19TH ST)						502
						TOTAL	1846

44213204
TIE BARS 3/4"

ALIGNMENT	STA	OFFSET	LT/RT	STA	OFFSET	LT/RT	EACH
TIES BARS FOR PATCH LOCATIONS:							
	ASSUME 6 11' X 12' TYPE II PATCHES						33
	ASSUME 6 18' X 12' TYPE III PATCHES						54
	ASSUMED 140' x 12.5' TYPE IV PATCH (7TH AVE)						140
	ASSUMED 140' x 11' TYPE IV PATCH (7TH AVE)						140
	ASSUMED 215' x 24' TYPE IV PATCH (19TH ST)						215
						TOTAL	582
TIES AT 24" C-C ALONG LONGITUDIANL JOINT							

48100500
AGGREGATE SHOULDERS, TYPE A 6"

ALIGNMENT	STA FR	LT/RT	STA TO	SQ FT			SQ YD
PR 6TH-C	336+25.00	LT	337+42.06	254			28
PR 6TH-D	420+62.66	RT	421+72.77	222			25
PR 6TH-D	420+63.82	LT	423+63.23	591			66
						TOTAL	119

48203009
HOT-MIX ASPHALT SHOULDERS, 3"

ALIGNMENT	STA FR	LT/RT	STA TO	SQ FT			SQ YD
PR RD-H	211+63.59	RT	212+50.88	292			32
PR RD-H	215+49.70	LT	217+15.18	560			62
6TH-D	421+72.77	RT	422+59.98	293			33
6TH-D	423+63.23	LT	425+13.01	486			54
						TOTAL	181

SCHO-09

LAYOUT	CBP	11/26/2014
DRAWN	CBP	11/26/2014
REVIEWED	AAP	11/26/2014

FILE NAME = D2CONAB-HPS-sht-schedule001.dgn
USER NAME = heato01447
PLOT SCALE =
PLOT DATE = 5/25/2017
DESIGNED - CBP
DRAWN - CBP
CHECKED - AAP
DATE - 1/20/2017
REVISED - 05/16/17
REVISED -
REVISED -
REVISED -

STATE OF ILLINOIS
DEPARTMENT OF TRANSPORTATION

SCHEDULE OF QUANTITIES

SCALE: SHEET NO. OF SHEETS STA. TO STA.

F.A.I RTE.	SECTION	COUNTY	TOTAL SHEETS	SHEET NO.
74	(81-1)R & 81-1HVBR	ROCK ISLAND	1504	66

CONTRACT NO. 64C08
ILLINOIS FED. AID PROJECT

HANSON

50200400
ROCK EXCAVATION FOR STRUCTURES

ALIGNMENT	STA	STA	RT/LT	STRUCTURE NO		CU YD
I-74	32+17.69	N/A	LT	B42		51
I-74	33+16.17	N/A	LT	A19		21
I-74	33+22.11	33+62.91	LT/RT	S9-S5		70
I-74	33+62.91	33+74.57	RT	B40-S9		6
RAMP RD-H	211+21.31	212+85.23	RT	A22-A42		138
RAMP RD-H	212+85.23	216+97.53	RT	A42-A43		487
RAMP 6TH-D	428+74.30	430+50.68	RT	A16b-A19		109
RAMP 6TH-D	428+02.80	428+74.30	RT	A16a-A16b		55
RAMP 6TH-D	430+42.09	430+50.68	LT/RT	S5-A19		36
RAMP 6TH-D	430+50.68	431+43.72	RT	A19-B42		101
SEE TRAFFIC SIGNAL SCHEDULES						9
					TOTAL	1083

50800105
REINFORCEMENT BARS

ALIGNMENT	STATION	LT/RT	LB/FT	NUMBER	LENGTH1	LENGTH2	POUND
6TH AVE	6002+10.83	RT	0.668	6	2.667	5.333	14
6TH AVE	6002+40.44	RT	0.668	7	3.667	6.750	21
6TH AVE	6002+74.47	LT	0.668	4	4.667	3.917	11
7TH AVE	7015+16.13	RT	0.668	6	3.497	5.667	17
7TH AVE	7015+62.16	RT	0.668	6	3.507	5.667	17
						TOTAL	80

50901760
PIPE HANDRAIL

ALIGNMENT	STA	LT/RT					FOOT
6TH AVE	6002+10.83	RT					13.3
6TH AVE	6002+40.44	RT					16.2
6TH AVE	6002+74.47	LT					10.5
7TH AVE	7015+16.13	RT					14.0
7TH AVE	7015+62.16	RT					14.0
						TOTAL	68.0

52200800
SEGMENTAL CONCRETE BLOCK WALLL

ALIGNMENT	STA	OFFSET	LT/RT	STA	OFFSET	LT/RT	SQ FT
7TH AVE	7013+66.03	66.44'	RT	7014+35.02	69.44'	RT	240
7TH AVE	7014+39.80	69.26'	RT	7015+14.20	57.40'	RT	320
7TH AVE	7015+18.03	57.29'	RT	7015+60.27	57.29'	RT	210
7TH AVE	7015+64.11	57.15'	RT	7016+17.99	48.67'	RT	255
						TOTAL	1,025

54210206
PIPE ELBOW, 72"

DEGREE	STA	OFFSET	LT/RT	-	-	-	EACH
15	1923+07.65	25.36'	RT	–	–	–	1
8	1923+92.93	22.89'	RT	–	–	–	1
12	1924+45.77	29.84'	RT	–	–	–	1
						TOTAL	3

55100300
STORM SEWER REMOVAL, 8"

ALIGNMENT	STA FROM	OFFSET	LT/RT	STA TO	OFFSET	LT/RT	LENGTH
EX 4TH AVE	405+96.34	179.16	RT	406+72.57	180.49	RT	76
RIVER DR	3007+34.88	45.37	RT	3007+41.14	48.72	RT	7
6TH AVE	6004+11.64	52.30	RT	6004+17.20	46.73	RT	8
7TH AVE	7012+38.04	117.31	LT	7012+47.28	121.03	LT	10
						TOTAL	101

55100400
STORM SEWER REMOVAL, 10"

ALIGNMENT	STA FROM	OFFSET	LT/RT	STA TO	OFFSET	LT/RT	LENGTH
EX 4TH AVE	408+27.35	198.25	RT	407+91.52	198.81	RT	36
EX 5TH AVE	5006+49.60	30.24	LT	5006+15.60	28.3	LT	34
						TOTAL	70

56400300
FIRE HYDRANTS TO BE ADJUSTED

ALIGNMENT	STA	OFFSET	LT/RT	SHEET	-	-	EACH
21ST ST	13+09.72	32.73	LT	DRUL-01			1
6TH AVE.	6008+44.82	26.67	LT	DRUL-02			1
						TOTAL	2

55100500
STORM SEWER REMOVAL, 12"

ALIGNMENT	STA FROM	OFFSET	LT/RT	STA TO	OFFSET	LT/RT	LENGTH
RIVER DR	3012+85.43	193.85	LT	3012+97.59	194.54	LT	12
EX I-74	261+89.03	57.11	LT	262+60.38	42.23	LT	73
EX I-74	261+62.21	49.04	RT	261+68.44	22.84	RT	27
EX I-74	261+68.44	22.84	RT	261+89.03	57.11	LT	83
RIVER DR	3008+93.47	141.58	RT	3008+51.86	193.95	RT	67
RIVER DR	3009+54.06	220.79	RT	3008+84.12	248.34	RT	75
RIVER DR	3010+45.18	242.20	RT	3009+54.06	220.79	RT	94
RIVER DR	3011+37.43	255.25	RT	3010+45.18	242.20	RT	93
RIVER DR	3014+06.77	235.12	RT	3013+98.56	184.50	RT	51
RIVER DR	3015+58.93	213.71	RT	3015+72.76	177.44	RT	39
RIVER DR	3015+34.51	243.17	RT	3015+58.93	213.71	RT	38
RIVER DR	3015+05.17	98.07	RT	3014+62.03	142.58	RT	62
RIVER DR	3016+15.21	113.13	RT	3015+72.76	177.44	RT	77
EX 4TH AVE	404+56.31	125.49	LT	403+96.19	91.97	LT	69
EX 5TH AVE	5006+24.19	34.51	RT	5006+16.72	35.04	RT	7
EX 5TH AVE	5006+04.23	20.65	LT	5006+15.91	19.78	LT	12
EX 5TH AVE	5006+00.50	21.31	RT	5006+15.99	19.09	RT	16
EX 5TH AVE	5006+23.90	19.83	LT	5006+15.91	19.78	LT	8
EX 21ST ST	25+06.62	14.89	RT	21+19.04	20.46	RT	387
EX 5TH AVE	5002+40.04	54.86	RT	5001+71.68	65.16	RT	69
EX 5TH AVE	5001+71.68	65.16	RT	5001+56.21	40.64	RT	29
EX 5TH AVE	5002+76.42	147.75	RT	5002+06.66	157.56	RT	70
EX 5TH AVE	5002+22.92	227.42	RT	5001+83.67	231.80	RT	39
EX 5TH AVE	5002+67.01	223.70	RT	5002+22.92	227.42	RT	44
EX 5TH AVE	5003+05.10	223.05	RT	5002+67.01	223.70	RT	38
6TH AVE	6004+90.39	60.05	LT	6004+49.33	60.26	LT	41
6TH AVE	6003+42.14	52.05	LT	6004+01.33	56.24	LT	59
6TH AVE	6004+01.33	56.24	LT	6004+49.33	60.26	LT	48
6TH AVE	6004+45.39	47.00	RT	6004+49.33	60.26	LT	107
6TH AVE	6004+17.20	46.73	RT	6004+45.39	47.00	RT	28
6TH AVE	6003+17.61	187.48	RT	6003+43.52	16.58	RT	173
6TH AVE	6003+43.52	16.58	RT	6004+03.54	16.43	RT	60
6TH AVE	6004+53.88	16.23	RT	6004+53.95	24.78	LT	41
7TH AVE	7011+44.34	189.21	LT	7011+37.76	129.40	LT	60
7TH AVE	7011+93.38	142.62	LT	7011+37.76	129.40	LT	57
7TH AVE	7011+37.76	129.40	LT	7011+29.56	99.20	LT	31
7TH AVE	7011+29.56	99.20	LT	7011+09.89	73.59	LT	32
7TH AVE	7011+90.30	88.03	LT	7011+65.44	64.36	LT	34
7TH AVE	7011+65.44	64.36	LT	7011+09.89	73.59	LT	56
7TH AVE	7012+65.92	7.55	LT	7012+00.52	2.62	RT	66
7TH AVE	7012+00.52	2.62	RT	7011+09.30	1.53	RT	91
7TH AVE	7012+74.47	139.31	LT	7012+61.97	104.30	LT	37
7TH AVE	7012+47.28	121.03	LT	7012+61.97	104.30	LT	22
7TH AVE	7012+61.97	104.30	LT	7012+45.44	75.03	LT	34
7TH AVE	7012+45.44	75.03	LT	7011+65.44	64.36	LT	81
7TH AVE	7013+31.79	75.75	LT	7013+10.64	52.57	LT	31
7TH AVE	7013+27.63	46.38	LT	7013+10.64	52.57	LT	18
7TH AVE	7013+80.38	60.79	RT	7013+54.92	49.32	RT	28
7TH AVE	7011+16.04	70.15	RT	7011+35.93	58.15	RT	23
7TH AVE	7011+41.87	106.05	RT	7011+59.95	86.65	RT	27
7TH AVE	7012+94.54	49.52	RT	7012+76.30	59.61	RT	20
7TH AVE	7013+10.72	52.60	LT	7012+45.44	75.03	LT	69
7TH AVE	7011+91.05	69.58	RT	7011+59.95	86.65	RT	35
7TH AVE	7013+54.92	49.32	RT	7013+35.25	85.66	RT	41
7TH AVE	7010+07.22	106.81	RT	7010+26.52	98.26	RT	21
19TH ST	1913+10.64	61.59	LT	1913+15.02	2.13	LT	22
19TH ST	1913+14.80	23.87	RT	1913+15.02	2.13	LT	64
19TH ST	1920+42.09	23.49	RT	1919+92.99	46.82	RT	55
PR 7TH-B	523+19.90	35.64	LT	523+21.83	54.42	LT	19
PR 7TH-B	524+17.30	38.86	LT	523+19.90	35.64	LT	99
PR 7TH-B	524+19.07	4.64	LT	524+17.30	38.86	LT	34
PR 7TH-B	524+68.37	74.90	LT	524+17.30	38.86	LT	64
Pipe A16k-A16L	–	–	–	–	–	–	7
Pipe S17a-S17	–	–	–	–	–	–	26
Pipe A16c-A16d	–	–	–	–	–	–	7
Pipe A16d-A16f	–	–	–	–	–	–	25
Pipe A16e-A16f	–	–	–	–	–	–	7
Pipe A16f-A16h	–	–	–	–	–	–	22
Pipe A16g-A16h	–	–	–	–	–	–	7
Pipe A16h-A17	–	–	–	–	–	–	13
Pipe A16i-A16j	–	–	–	–	–	–	7
Pipe T14a-Ex	–	–	–	–	–	–	47
Pipe A3-B56	–	–	–	–	–	–	46
Pipe Ex-E13a	–	–	–	–	–	–	21
						TOTAL	3,642

55100700
STORM SEWER REMOVAL, 15"

ALIGNMENT	STA FROM	OFFSET	LT/RT	STA TO	OFFSET	LT/RT	LENGTH
EX I-74	262+60.38	42.23	LT	263+34.98	52.10	LT	75
EX I-74	263+34.98	52.10	LT	263+95.26	71.21	LT	63
4TH AVE	407+49.94	115.36	LT	407+68.44	88.48	LT	33
5TH AVE	5002+06.66	157.56	RT	5001+65.52	183.10	RT	48
6TH AVE	6004+10.86	197.61	LT	6005+17.12	206.55	LT	107
6TH AVE	6004+03.54	16.43	RT	6004+04.71	24.74	LT	41
6TH AVE	6005+04.42	16.29	RT	6005+04.66	24.83	LT	41
7TH AVE	7011+09.89	73.59	LT	7011+08.54	1.39	RT	75
						TOTAL	483

55100900
STORM SEWER REMOVAL, 18"

ALIGNMENT	STA FROM	OFFSET	LT/RT	STA TO	OFFSET	LT/RT	LENGTH
EX I-74	263+95.26	71.21	LT	264+48.43	26.87	LT	69
EX I-74	264+48.43	26.87	LT	264+47.91	16.86	RT	44
RIVER DR	3015+72.76	177.44	RT	3015+66.41	171.82	RT	8
EX 4TH AVE	407+90.67	346.91	RT	407+92.66	8.97	RT	338
EX 4TH AVE	407+92.66	8.97	RT	408+75.94	9.31	RT	83
EX 5TH AVE	5006+15.99	19.09	RT	5006+15.55	19.65	LT	39
6TH AVE	6004+04.71	24.74	LT	6004+53.95	24.78	LT	49
7TH AVE	7012+13.03	113.34	RT	7011+59.95	86.65	RT	59
7TH AVE	7012+15.57	139.92	RT	7012+13.03	113.34	RT	27
19TH ST	1925+39.56	3.16	RT	1925+39.38	24.70	RT	22
						TOTAL	738

55101100
STORM SEWER REMOVAL 21"

ALIGNMENT	STA FROM	OFFSET	LT/RT	STA TO	OFFSET	LT/RT	LENGTH
6TH AVE	6004+53.95	24.78	LT	6005+04.66	24.83	LT	51
						TOTAL	51

55101200
STORM SEWER REMOVAL, 24"

ALIGNMENT	STA FROM	OFFSET	LT/RT	STA TO	OFFSET	LT/RT	LENGTH
RIVER DR	3013+00.37	116.93	LT	3012+97.20	205.36	LT	88
RIVER DR	3012+97.20	205.36	LT	3012+96.74	223.80	LT	18
RIVER DR	3012+96.74	223.80	LT	3012+90.79	453.49	LT	230
RIVER DR	3012+91.54	318.86	RT	3012+95.95	51.12	RT	268
EX 4TH AVE	407+93.08	80.18	LT	407+68.44	88.48	LT	26
7TH AVE	7012+76.30	59.61	RT	7011+59.95	86.65	RT	19
						TOTAL	749

55101400
STORM SEWER REMOVAL 30"

ALIGNMENT	STA FROM	OFFSET	LT/RT	STA TO	OFFSET	LT/RT	LENGTH
EX 5TH AVE	5002+95.69	8.09	RT	5002+85.69	33.74	LT	43
EX 5TH AVE	5003+38.84	178.36	RT	5002+95.69	8.09	RT	176
6TH AVE	6005+17.12	206.55	LT	6005+33.15	24.41	LT	183
6TH AVE	6005+04.66	24.83	LT	6005+33.15	24.41	LT	28
7TH AVE	7010+81.18	9.80	LT	7011+08.54	1.39	RT	30
7TH AVE	7011+35.93	58.15	RT	7011+08.54	1.39	RT	63
7TH AVE	7011+59.95	86.65	RT	7011+35.93	58.15	RT	37
7TH AVE	7013+35.25	85.66	RT	7013+14.00	79.40	RT	22
7TH AVE	7013+14.00	79.40	RT	7012+76.30	59.61	RT	43
						TOTAL	625

55101900
STORM SEWER REMOVAL, 48"

ALIGNMENT	STA FROM	OFFSET	LT/RT	STA TO	OFFSET	LT/RT	LENGTH
PR 19TH ST	1915+41.61	12.04	RT	1914+87.32	12.37	RT	54
PR 19TH ST	1914+87.32	12.37	RT	1913+15.02	2.13	LT	172
						TOTAL	226

55102300
STORM SEWER REMOVAL 72"

ALIGNMENT	STA FROM	OFFSET	LT/RT	STA TO	OFFSET	LT/RT	LENGTH
19TH ST	1919+92.99	46.82	RT	1919+40.00	30.47	RT	56
19TH ST	1920+70.00	43.85	RT	1919+92.99	46.82	RT	78
19TH ST	1923+96.35	33.58	RT	1924+45.77	29.84	RT	50
						TOTAL	184

SCHQ-10

LAYOUT	CBP	11/26/2014
DRAWN	CBP	11/26/2014
REVIEWED	AAP	11/26/2014

FILE NAME = D2CONAB-HPS-sht-schedule001.dgn

USER NAME = hanto01447 | PLOT SCALE = | PLOT DATE = 5/25/2017

DESIGNED - CBP | DRAWN - CBP | CHECKED - AAP | DATE - 1/20/2017

REVISED - 05/16/17 | REVISED - | REVISED - | REVISED -

STATE OF ILLINOIS
DEPARTMENT OF TRANSPORTATION

SCHEDULE OF QUANTITIES

SCALE: | SHEET NO. OF SHEETS | STA. TO STA.

F.A.I RTE.	SECTION	COUNTY	TOTAL SHEETS	SHEET NO.
74	(81-1)R & 81-1)HVBR	ROCK ISLAND	1504	67

CONTRACT NO. 64C08

ILLINOIS FED. AID PROJECT

DRAINAGE STRUCTURE SCHEDULE

LOCATION						PAY ITEM # –>	54213663	54213681	54213717	60218300	60218400	60218600	60219000	60219100	60219300	60219510	60221000	60221100	60221700	60221800	60222210	60223800	60224005	60224020	60224035	60224446
							PRC FLAR END SEC 18	PRC FLAR END SEC 36	PRC FLAR END SEC 72	MAN TA 4 DIA T1F OL	MAN TA 4 DIA T1F CL	MAN TA 4 DIA T4F&G	MAN TA 4 DIA T8G	MAN TA 4 DIA T9F&G	MAN TA 4 DIA T11F&G	MAN TA 4 DIA T20F&G	MAN TA 5 DIA T1F OL	MAN TA 5 DIA T1F CL	MAN TA 5 DIA T8G	MAN TA 5 DIA T9F&G	MAN TA 5 DIA T20F&G	MAN TA 6 DIA T1F CL	MAN TA 6 DIA T8G	MAN TA 6 DIA T11F&G	MAN TA 6 DIA T20F&G	MAN TA 7 DIA T1F CL
SHEET	ROADWAY	STR	STA	OFFSET LT	OFFSET RT	RIM ELEV	EA	EA	EA	EA	EA	EA	EA	EA	EA	EA	EA	EA	EA	EA	EA	EA	EA	EA	EA	EA
DRUM-01	PR RD-H	A45	218+90.55		27.80	---			1																	
DRUM-01	PR RD-G	C2	128+96.00		7.00	586.70										1										
DRUM-01	PR RD-G	C14	129+80.00		116.75	567.65																	1			
DRUM-01	PR RD-G	C15	128+43.00		122.00	565.15																	1			
DRUM-01	PR RD-G	C16	127+65.40		147.02	---		1																		
DRUM-01	PR RD-G	C18	128+98.00	22.00		587.27								1												
DRUM-01	PR RD-G	C19	130+16.00	22.00		583.01								1												
DRUM-01	PR I-74	D2	6746+75.00	1.52		590.56										1										
DRUM-01	PR I-74	D3	6746+75.00		5.06	590.56										1										
DRUM-01	PR I-74	D4	6746+75.00		69.94	590.26										1										
DRUM-01	PR I-74	D5	25+43.14	70.43		589.54										1										
DRUM-01	PR I-74	D7	25+56.14		74.00	589.32										1										
DRUM-01	PR I-74	D8	25+73.14		74.00	589.33										1										
DRUM-01	PR I-74	D15	25+58.14	70.54		589.50										1										
DRUM-01	PR I-74	D16	25+73.14	70.66		589.51															1					
DRUM-03	Ramp 3-N	A16L	1069+10.38	5.83		572.12												1								
DRUM-03	PR I-74	A46	34+56.83		414.76	570.28																1				
DRUM-03	PR I-74	B37b	40+77.49		80.04	584.33																			1	
DRUM-03	PR I-74	B36	38+27.66		83.61	575.69																				1
DRUM-03	PR I-74	B39	36+72.16		84.00	575.02																				1
DRUM-03	PR 6TH-C	B53	331+35.36	25.68		598.81										1										
DRUM-03	PR 6TH-C	B54	331+71.98	66.55		584.68					1															
DRUM-03	PR I-74	B60	38+57.48		93.51	574.56							1													
DRUM-03	PR RD-G	C5	132+50.00		23.77	574.92										1										
DRUM-03	PR RD-G	C7	134+40.00		31.00	571.68										1										
DRUM-03	PR RD-G	C8	134+40.00		85.84	566.50													1							
DRUM-03	PR RD-G	C11	135+25.00		65.57	567.91													1							
DRUM-03	PR RD-G	C12	132+87.33		63.33	568.00													1							
DRUM-03	PR RD-G	C13	132+10.00		63.93	567.54																	1			
DRUM-03	PR RD-G	C17	135+25.00		31.00	571.07										1										
DRUM-03	PR RD-G	C20	132+58.13	22.00		575.43								1												
DRUM-03	PR RD-G	C21	133+78.13	30.00		573.35								1												
DRUM-03	PR RD-G	C22	135+25.00	30.00		572.07														1						
DRUM-03	PR RD-G	C24	131+50.00	22.00		578.53								1												
DRUM-03	PR RD-G	C25	130+90.00		65.27	568.02																	1			
DRUM-03	PR I-74	D21	26+23.14		74.00	589.45										1										
DRUM-03	PR 6TH-C	S9	326+94.12	29.42		570.63																				1
DRUM-03	PR 6TH-C	S15	328+44.92	68.37		571.50					1															
DRUM-03	PR 6TH-C	S16	328+59.18	39.35		571.10																1				
DRUM-03	PR I-74	S16a	35+54.72		99.31	572.09																				1
DRUM-03	PR 6TH-C	S17	328+78.21		4.33	570.60					1															
DRUM-03	PR I-74	S25	38+83.74		32.68	578.00							1													
DRUM-03	PR I-74	S26	38+97.59		82.81	577.12																1				
DRUM-03	PR I-74	S32	40+66.16		6.18	579.75					1															
DRUM-03	PR I-74	S33	40+83.16		66.05	583.52					1															
DRUM-03	PR 6TH-C	T14	333+61.03		82.85	575.05													1							
DRUM-03	PR 6TH-C	T16	334+00.00		8.00	586.28										1										
DRUM-04	PR 6TH-D	A15	426+88.60		21.61	573.25																	1			
DRUM-04	PR 6TH-D	A16	427+70.88		21.29	573.55																				1
DRUM-04	PR 6TH-D	A16b	428+74.30		22.55	571.59																				1
DRUM-04	Ramp 3-N	A16j	1069+32.76	5.83		572.09												1								
DRUM-04	--	A17	REMOVED FROM DESIGN																							
DRUM-04	PR RD-H	A20	430+47.61		134.12	570.00													1							
DRUM-04	PR 6TH-D	B56	425+16.70		8.63	597.16										1										
DRUM-04	PR 6TH-D	B56a	423+46.69		9.27	590.36										1										
DRUM-04	PR RD-H	D17	215+32.00	22.00		579.69														1						
DRUM-04	PR RD-H	D24	214+32.00	22.00		576.44														1						
DRUM-04	PR RD-H	D25	213+32.00	22.00		573.85														1						
DRUM-04	PR RD-H	D26	212+70.00	22.00		572.77														1						
DRUM-04	PR RD-H	D27	211+28.00	22.00		571.21														1						
DRUM-04	PR 6TH-D	S5	430+42.09	20.81		569.97																				1
DRUM-06	PR I-74	B36	45+12.36		73.83	581.71																				1
DRUM-06	PR I-74	B37	42+53.16		77.53	579.39																1				
DRUM-06	PR I-74	B37a	42+06.14		78.20	577.55																1				
DRUM-06	PR 6TH-C	T18	336+25.00		8.00	580.59										1										
SUBTOTAL							0	1	1	0	5	0	2	5	0	17	0	2	5	6	1	5	5	0	1	8

SCHO-11

FILE NAME =	USER NAME = heato01447	DESIGNED - JJW	REVISED - 05/16/17
D2CONAB-HPS-sht-drain100M.dgn		DRAWN - JJW	REVISED -
	PLOT SCALE =	CHECKED - MKA	REVISED -
	PLOT DATE = 5/26/2017	DATE - 1/20/2017	REVISED -

STATE OF ILLINOIS
DEPARTMENT OF TRANSPORTATION

SCHEDULE OF QUANTITIES
DRAINAGE SCHEDULES

SCALE: | SHEET NO. OF SHEETS | STA. TO STA.

F.A.I RTE.	SECTION	COUNTY	TOTAL SHEETS	SHEET NO.
74	(81-1)R & 81-1)HVBR	ROCK ISLAND	1504	68

CONTRACT NO. 64C08

ILLINOIS FED. AID PROJECT

LAYOUT	JJW	12/19/2014
DRAWN	JJW	12/21/2015
REVIEWED	MKA	1/14/2016

HANSON

DRAINAGE STRUCTURE SCHEDULE

LOCATION							PAY ITEM # -->	54213663	54213681	54213717	60218300	60218400	60218600	60219000	60219100	60219300	60219510	60221000	60221100	60221700	60221800	60222210	60223800	60224005	60224020	60224035	60224446
								PRC FLAR END SEC 1B	PRC FLAR END SEC 3G	PRC FLAR END SEC 7Z	MAN TA 4 DIA T1F CL	MAN TA 4 DIA T1F CL	MAN TA 4 DIA T4F&G	MAN TA 4 DIA T8G	MAN TA 4 DIA T9F&G	MAN TA 4 DIA T11F&G	MAN TA 4 DIA T20F&G	MAN TA 5 DIA T1F OL	MAN TA 5 DIA T1F CL	MAN TA 5 DIA T8G	MAN TA 5 DIA T9F&G	MAN TA 5 DIA T20F&G	MAN TA 6 DIA T1F CL	MAN TA 6 DIA T8G	MAN TA 6 DIA T11F&G	MAN TA 6 DIA T20F&G	MAN TA 7 DIA T1F CL
SHEET	ROADWAY	STR	STA	OFFSET LT	OFFSET RT	RIM ELEV		EA	EA	EA	EA	EA	EA	EA	EA	EA	EA	EA	EA	EA	EA	EA	EA	EA	EA	EA	EA
DRUM-07	PR I-74	A7	646+21.89		45.98	579.50																	1				
DRUM-07	RAMP 7TH-A	A9	646+12.74	39.50		578.50											1										
DRUM-07	RAMP 7TH-A	A10	646+21.89	6.00		579.12							1														
DRUM-07	RAMP 7TH-A	A11	646+21.89	0.00		579.20							1														
DRUM-07	RAMP 7TH-A	A11a	646+21.89		36.00	578.42																1					
DRUM-07	PR 6TH-D	B57	421+76.75		13.00	583.61											1										
DRUM-07	PR 6TH-D	B58	421+77.20	41.10		---		1																			
DRUL-01	PR 21ST N	A12	12+98.11	35.60		575.15																	1				
DRUL-01	PR 21ST N	A12a	12+78.61	21.67		574.65													1								
DRUL-01	PR 21ST N	A12c	13+07.13		20.12	573.36										1											
DRUL-01	PR 21ST N	A13	10+98.19	17.83		576.51																	1				
DRUL-01	PR 21ST N	A13a	10+73.27	16.74		576.27																			1		
DRUL-01	PR 21ST N	A13b	10+27.86	54.85		577.85						1															
DRUL-01	PR 6TH AVE	A14a	6008+00.05	20.00		578.15					1																
DRUL-01	PR 6TH AVE	A14b	6008+00.55		13.94	578.18					1																
DRUL-01	PR 21ST S	A14c	8+36.85		42.00	578.26												1									
DRUL-01	PR 21ST S	A14d	7+27.60		14.41	579.91										1											
DRUL-02	6TH AVE.	N9	6003+66.67	24.00		580.60											1										
DRUL-02	6TH AVE.	N11	6003+00.00	24.00		580.82											1										
DRUL-03	6TH AVE.	S40	6005+85.92	29.58		580.87						1															
DRUL-03	6TH AVE.	S41	6005+17.35	29.58		581.30						1															
DRUL-03	6TH AVE.	S42	6004+82.54	29.58		581.38						1															
DRUL-03	6TH AVE.	S43	6004+71.68	40.58		581.58																					1
DRUL-05	PR I-74	B35	47+00.43		71.14	584.34																					1
DRUL-05	7TH AVE.	N54a	7010+30.44	9.80		587.24						1															
DRUL-05	7TH AVE.	B56	7011+05.14		0.00	586.53																					1
DRUL-06	7TH AVE.	A2	7013+79.55		0.00	584.24					1																
DRUL-06	7TH AVE.	A4	7012+25.00	58.29		584.46											1										
DRUL-06	7TH AVE.	A6	7012+25.00	3.93		585.49																				1	
DRUL-06	7TH AVE.	N15	7015+25.00		0.00	582.97					1																
DRUL-06	7TH AVE.	N16	7016+75.00		0.00	581.83					1																
DRUL-07	19TH ST.	E13	1913+91.14		60.64	587.96											1										
DRUL-07	19TH ST.	E14	1913+27.34		56.00	587.71																1					
DRUL-07	19TH ST.	N20	1913+50.72		1.09	588.42																					1
DRUL-07	19TH ST.	N22	1913+50.00		9.00	588.28										1											
DRUL-09	RAMP 7TH-B	E13a	524+00.00		6.00	594.24											1										
DRUL-09	19TH ST.	N24	1915+41.61		12.04	593.48													1								
DRUL-09	19TH ST.	N26	1915+41.61		33.00	593.06											1										
DRUL-09	19TH ST.	N28	1917+00.00		5.02	597.07						1															
DRUL-11	19TH ST.	N40	1925+40.00		3.43	612.40											1										
SUBTOTAL								1	0	0	5	6	2	0	0	3	9	1	2	0	0	2	3	0	1	1	4
TOTAL								1	1	1	5	11	2	2	5	3	26	1	4	5	6	3	8	5	1	2	12

HANSON

LAYOUT	JJW	11/19/2014
DRAWN	JJW	12/21/2015
REVIEWED	MKA	1/14/2016

FILE NAME = 02CONAB-HPS-sht-drain101M.dgn

USER NAME = willb1457

PLOT SCALE =

PLOT DATE = 5/25/2017

DESIGNED - JJW

DRAWN - JJW

CHECKED - MKA

DATE - 1/20/2017

REVISED 1 05/16/17

REVISED -

REVISED -

REVISED -

STATE OF ILLINOIS
DEPARTMENT OF TRANSPORTATION

SCHEDULE OF QUANTITIES
DRAINAGE SCHEDULES

SCALE: | SHEET NO. OF SHEETS | STA. TO STA.

SCHQ-12

F.A.I RTE.	SECTION	COUNTY	TOTAL SHEETS	SHEET NO.
74	(81-1)R & 81-1HVBR	ROCK ISLAND	1504	69

CONTRACT NO. 64C08

ILLINOIS FED. AID PROJECT

DRAINAGE STRUCTURE SCHEDULE

LOCATION							60224459	60224469	60240210	60240301	60240303	60240310	60240324	60270050
						PAY ITEM # -->	MAN TA 8 DIA T1F CL	MAN TA 9 DIA T1F CL	INLETS TB T1F OL	INLETS TB T8G	INLETS TB T9F&G	INLETS TB T11F&G	INLETS TB T20F&G	DR STR T4 W/2 T20F&G
SHEET	ROADWAY	STR	STA	OFFSET LT	OFFSET RT	RIM ELEV	EA	EA	EA	EA	EA	EA	EA	EA
DRUM-01	PR RD-H	A43a	217+00.00		66.00	564.00				1				
DRUM-01	PR RD-H	B49	215+50.00		14.55	579.75							1	
DRUM-01	PR RD-H	B51	218+25.89		36.69	565.37				1				
DRUM-01	PR RD-G	C1	128+98.00		23.69	586.25							1	
DRUM-01	PR RD-G	C3	130+16.00		8.08	582.61							1	
DRUM-01	PR I-74	D1	6746+75.00	73.98		590.09							1	
DRUM-01	PR I-74	D6	25+43.14		74.00	589.34							1	
DRUM-01	PR I-74	D8	25+43.14		0.00	590.04								1
DRUM-01	PR I-74	D10	25+58.14		0.00	590.03								1
DRUM-01	PR I-74	D11	25+73.14		0.00	590.04								1
DRUM-03	PR I-74	A47	34+09.51		242.05	568.50				1				
DRUM-03	PR I-74	B40	33+74.57		121.93	570.60	1							
DRUM-03	PR RD-G	C4	132+48.91		40.33	574.43							1	
DRUM-03	PR RD-G	C6	134+40.00		47.69	571.30							1	
DRUM-03	PR RD-G	C9	135+25.00	61.40		567.25				1				
DRUM-03	PR RD-G	C10	136+01.23		32.44	570.86							1	
DRUM-03	PR RD-G	C23	135+79.00	30.00		571.82					1			
DRUM-03	PR I-74	D12	26+50.00		79.83	592.06							1	
DRUM-03	PR I-74	D18	26+73.43		74.00	589.80							1	
DRUM-03	PR 6TH-C	N8	332+25.82		75.73	575.42							1	
DRUM-03	PR 6TH-C	S26	332+65.00		7.93	594.37							1	
DRUM-03	PR 6TH-C	T15	334+00.00	26.90		586.87							1	
DRUM-04	–	A16a	REMOVED FROM DESIGN											
DRUM-04	PR RD-H	B47	212+70.00		16.00	572.22							1	
DRUM-04	PR 6TH-D	B55	425+17.46	22.03		597.75							1	
DRUM-04	PR I-74	D13	28+50.00		0.00	592.65								1
DRUM-04	PR I-74	D14	28+50.00	75.33		592.16							1	
DRUM-04	PR I-74	D22	26+23.14		0.00	590.16								1
DRUM-04	PR I-74	D23	26+23.14	71.14		589.61							1	
DRUM-04	PR RD-H	D27a	211+10.75		30.09	570.43							1	
DRUM-04	PR I-74	S24	38+64.44	36.88		579.89				1				
DRUM-06	PR 6TH-C	A46	334+80.53		240.83	579.43			1					
DRUM-06	PR I-74	B27	48+83.02		95.91	586.88	1							
DRUM-07	PR 6TH-C	T17	336+25.00	39.07		580.15							1	
DRUM-07	PR 6TH-C	T20	337+22.04		8.00	579.53							1	
DRUL-01	PR 21ST N	A12b	12+98.59	22.86		573.29						1		
DRUL-01	PR 21ST N	A13c	10+95.59		11.93	576.02						1		
DRUL-01	PR 21ST S	A14e	8+36.85	42.00		578.26						1		
DRUL-01	PR 21ST S	A14f	7+33.69	35.40		579.43						1		
DRUL-02	6TH AVE.	N10	6003+66.67		12.00	580.84							1	
DRUL-02	6TH AVE.	N12	6003+00.00		12.00	581.06							1	
DRUL-03	6TH AVE.	A8	6006+00.57	24.00		580.39							1	
DRUL-05	7TH AVE.	A3	7011+50.66		4.34	586.06							1	
DRUL-05	7TH AVE.	A4a	7011+60.00	54.15		585.15							1	
DRUL-05	7TH AVE.	N20b	7008+52.22		71.70	587.56							1	
DRUL-05	7TH AVE.	N20c	7006+29.89	11.87		588.32							1	
DRUL-05	7TH AVE.	N54	7010+30.44	54.00		586.34							1	
DRUL-05	7TH AVE.	N55	7010+22.56		48.00	586.71							1	
DRUL-06	7TH AVE.	A5	7012+63.32		48.00	584.58							1	
DRUL-06	7TH AVE.	N14	7015+25.00		38.37	582.14							1	
DRUL-06	7TH AVE.	N17	7016+85.79		1.01	581.80			1					
DRUL-06	7TH AVE.	N18	7015+20.00	52.80		581.88							1	
DRUL-07	19TH ST.	E13b	1913+83.93		35.16	586.37							1	
DRUL-07	19TH ST.	N20b	1910+88.37	33.24		586.40							1	
DRUL-07	19TH ST.	N21	1913+25.00		9.00	588.17						1		
DRUL-07	19TH ST.	N21a	1913+25.00		3.00	586.34						1		
DRUL-09	19TH ST.	N25	1915+41.61	33.00		593.05							1	
DRUL-09	19TH ST.	N27	1917+00.00		33.00	596.14							1	
DRUL-09	19TH ST.	N28a	1917+00.00	33.00		596.14							1	
RDWY-14	RIVER DRIVE	A30a	3017+75.00	4.87		571.85							1	
MOT-12	7TH AVE.	N17a	7018+60.09		2.79	580.17			1					
Total							2	0	3	5	1	6	38	5

TEMPORARY DRAINAGE STRUCTURE SCHEDULE

LOCATION					PAY ITEM # -->	60218400	60240301	60240324
						MAN TA 4 DIA T1F CL	INLETS TB T8G	INLETS TB T20F&G
ROADWAY	STR	STA	OFFSET LT	OFFSET RT		EA	EA	EA
RAMP 3-N	A16k	1069+10.38	12.91					1
RAMP 3-N	S17a	167+56.00	18.48					1
PR. I-74	T14a	40+95.20		164.49			1	
RAMP 3-N	A16c	1070+02.28	12.85					1
RAMP 3-N	A16d	1070+02.44	6.38			1		
RAMP 3-N	A16e	1069+77.28	12.88					1
RAMP 3-N	A16f	1069+77.28	6.18			1		
RAMP 3-N	A16g	1069+55.07	12.91					1
RAMP 3-N	A16h	1069+55.07	6.04			1		
RAMP 3-N	A16i	1069+32.76	12.88					1
TOTAL						3	1	6

HANSON

LAYOUT	JJW	12/19/2014
DRAWN	JJW	12/29/2015
REVIEWED	MKA	1/14/2016

FILE NAME = 02CONAB-HPS-sht-drain102M.dgn

USER NAME = heato01447

PLOT SCALE =

PLOT DATE = 5/26/2017

DESIGNED - JJW
DRAWN - JJW
CHECKED - MKA
DATE - 1/20/2017

REVISED - 05/16/17
REVISED -
REVISED -
REVISED -

STATE OF ILLINOIS
DEPARTMENT OF TRANSPORTATION

SCHEDULE OF QUANTITIES
DRAINAGE SCHEDULES

SCALE: | SHEET NO. OF SHEETS | STA. TO STA.

SCHO-13

F.A.I RTE.	SECTION	COUNTY	TOTAL SHEETS	SHEET NO.
74	(81-1)R & 81-1)HVBR	ROCK ISLAND	1504	70

CONTRACT NO. 64C08

ILLINOIS FED. AID PROJECT

DRAINAGE PIPE SCHEDULE

SHEET	STRUCTURE FROM	STRUCTURE TO	TRENCH BACKFILL 20800150 CU YD	STORM SEWER, CLASS A TYPE 2 550A0340 12"	550A0360 15"	550A0380 18"	550A0400 21"	550A0410 24"	550A0430 30"	550A0450 36"	STORM SEWER, CLASS A TYPE 3 550A0640 12"	550A0660 15"	550A0680 18"	550A0710 24"	550A0750 36"	550A0770 42"	550A0780 48"	550A0820 72"	SS CL A T4 550A1070 42"	SS CL A T2 550A5100 30" EQRS	STORM SEWER WATER MAIN REQUIREMENTS Z0056610 15"	Z0056626 48"	STORM SEWERS JACKED IN PLACE 55200400 15"	55200900 24"	55201600 48"
DRUM-01	A43a	A43	29		37																				
DRUM-01	A43	A44	0															125							
DRUM-01	A44	A45	87															67							
DRUM-01	B51	A44	0		8																				
DRUM-01	C1	C2	4	17																					
DRUM-01	C14	C15	99							137															
DRUM-01	C15	C16	14												81										
DRUM-01	C18	C19	38	118																					
DRUM-01	C19	C24	47		132																				
DRUM-01	C2	C18	8	29																					
DRUM-01	C25	C14	0												114										
DRUM-01	C3	C19	9	30																					
DRUM-01	D1	D2	16	72																					
DRUM-01	D10	D11	10			15																			
DRUM-01	D11	D16	65				70																		
DRUM-01	D15	D16	13		15																				
DRUM-01	D16	D17	0				62																		
DRUM-01	D2	D3	3		7																				
DRUM-01	D3	D4	22		65																				
DRUM-01	D4	D5	75		116																				
DRUM-01	D5	D15	12		15																				
DRUM-01	D6	D7	4	15																					
DRUM-01	D7	D8	4	15																					
DRUM-01	D8	D11	54		75																				
DRUM-01	D9	D10	5	15																					
DRUM-03	A16j	A16L	6					22																	
DRUM-03	A16L	S16a	33					88																	
DRUM-03	A47	A48	0								179														
DRUM-03	B37b	S26	0													167									
DRUM-03	B38	B39	0														156								
DRUM-03	B39	S16	0																						144
DRUM-03	B40	S9	0														44								
DRUM-03	B53	B54	0								52														
DRUM-03	B54	B38	0									50													
DRUM-03	B60	B38	0											31											
DRUM-03	C10	C11	31	89																					
DRUM-03	C11	C8	32				87																		
DRUM-03	C12	C13	0							77															
DRUM-03	C13	C25	0							122															
DRUM-03	C17	C11	27			35																			
DRUM-03	C20	C21	43		120																				
DRUM-03	C21	C22	59		147																				
DRUM-03	C22	C17	47			61																			
DRUM-03	C23	C22	15	61																					
DRUM-03	C24	C20	31		108																				
DRUM-03	C4	C5	6	17																					
DRUM-03	C5	C20	15		46																				
DRUM-03	C6	C7	7	17																					
DRUM-03	C7	C17	70		85																				
DRUM-03	C8	C12	0					154																	
DRUM-03	C9	C22	7	31																					
DRUM-03	D12	D13	21	80																					
DRUM-03	D18	D21	11	50																					
DRUM-03	D21	D8	13	50																					
DRUM-03	N8	N8A	3	15																					
DRUM-03	S9	S5	0														153								
DRUM-03	S15	S16	0	33																					
DRUM-03	S16	B40	0														156								
DRUM-03	S17	S16	12	47																					
DRUM-03	S25	S28	0			52																			
DRUM-03	S26	B38	0													70									
DRUM-03	S28	B53	87	130																					
DRUM-03	S32	S33	0	62																					
DRUM-03	S33	B37b	29									15													
DRUM-03	T14	T14b	0						54																
DRUM-03	T14c	T14	0			28																			
DRUM-03	T16	B37b	125									73													
DRUM-03	T15	T16	0	35																					
SUBTOTAL			1357	1,028	976	191	219	262	54	336	231	138	0	31	195	237	509	192	0	0	0	0	0	0	144

HANSON

LAYOUT	JJW	11/19/2014
DRAWN	JJW	12/21/2015
REVIEWED	MKA	1/14/2016

SCHO-14

FILE NAME = D2CONAB-HPS-sht-drain103M.dgn	USER NAME = w11k01457	DESIGNED - JJW	REVISED - 05/16/17	STATE OF ILLINOIS DEPARTMENT OF TRANSPORTATION
		DRAWN - JJW	REVISED -	
	PLOT SCALE =	CHECKED - MKA	REVISED -	
	PLOT DATE = 4/28/2017	DATE - 1/20/2017	REVISED -	

SCHEDULE OF QUANTITIES
DRAINAGE SCHEDULES

SCALE: | SHEET NO. OF SHEETS | STA. TO STA.

F.A.I RTE.	SECTION	COUNTY	TOTAL SHEETS	SHEET NO.
74	(81-1)R & 81-1HVBR	ROCK ISLAND	1504	71

CONTRACT NO. 64C08

ILLINOIS FED. AID PROJECT

DRAINAGE PIPE SCHEDULE

SHEET	STRUCTURE FROM	STRUCTURE TO	TRENCH BACKFILL 20800150 CU YD	STORM SEWER, CLASS A TYPE 2 550A0340 12"	550A0360 15"	550A0380 18"	550A0400 21"	550A0410 24"	550A0430 30"	550A0450 36"	STORM SEWER, CLASS A TYPE 3 550A0640 12"	550A0660 15"	550A0680 18"	550A0710 24"	550A0750 36"	550A0770 42"	550A0780 48"	550A0820 72"	SS CL A T4 550A1070 42"	SS CL A T2 550A5100 30" EQRS	STORM SEWER WATER MAIN REQUIREMENTS Z0056610 15"	Z0056626 48"	STORM SEWERS JACKED IN PLACE 55200400 15"	55200900 24"	55201600 48"
DRUM-04	A12	A15	0							264															
DRUM-04	A15	A16	0												82										
DRUM-04	A16	A16a											REMOVED FROM DESIGN												
DRUM-04	A16	A16b	0																						103
DRUM-04	A16b	A19	0														176								
DRUM-04	A17	A16a											REMOVED FROM DESIGN												
DRUM-04	A17	A16b	3					14																	
DRUM-04	A19	B42	0																			94			
DRUM-04	A22	A42	397															164							
DRUM-04	A42	A43	965															412							
DRUM-04	B47	D26	10		39																				
DRUM-04	B49	D17	7	41																					
DRUM-04	B55	B56	9			31																			
DRUM-04	B56	B56a	123										170												
DRUM-04	B56a	B57	61										170												
DRUM-04	D13	D22	87										227												
DRUM-04	D14	D13	23		75																				
DRUM-04	D17	D24	97					100																	
DRUM-04	D22	D11	21			50																			
DRUM-04	D23	D16	16		50																				
DRUM-04	D24	D25	18					100																	
DRUM-04	D25	D26	22					62																	
DRUM-04	D26	D27	109					142																	
DRUM-04	D27	B44	0						42																
DRUM-04	D27a	D27	13	55																					
DRUM-04	S5	A19	0														46								
DRUM-04	S24	S25	0	72																					
DRUM-06	A46	EX	8	31																					
DRUM-06	B35	B36	0																188						
DRUM-06	B36	S43	263																131						
DRUM-06	B37	B37a	0													47									
DRUM-06	B37a	B37b	293													142									
DRUM-06	T18	S33	167									153													
DRUM-07	A7	A13b	0																					249	
DRUM-07	A9	A10	5			35																			
DRUM-07	A10	A11	2			6																			
DRUM-07	A11	A11a	6			36																			
DRUM-07	A11a	A7	0				10																		
DRUM-07	B57	B58	11			57																			
DRUM-07	T17	T18	12	47																					
DRUM-07	T20	T16	21	95																					
DRUL-01	A12a	A12	0							40															
DRUL-01	A12b	A12	0	13																					
DRUL-01	A13	A12a	0						185																
DRUL-01	A13a	A13	0						23																
DRUL-01	A13b	A13a	0						48																
DRUL-01	A13c	A13	8	30																					
DRUL-01	A14a	A13a	50			138																			
DRUL-01	A14b	A14a	0																				34		
DRUL-01	A14c	A14b	0																		51				
DRUL-01	A14d	A14c	24		109																				
DRUL-01	A14e	A14c	17	84																					
DRUL-01	A14f	A14d	10	50																					
DRUL-02	N9	N13	0	38																					
DRUL-02	N10	N9	36	36																					
DRUL-02	N11	N13	0		51																				
DRUL-02	N12	N11	36	36																					
	SUBTOTAL		2,950	628	324	353	10	418	298	304	0	153	567	0	82	189	222	576	319	0	51	94	34	249	103

HANSON

1.4.0007	JJW	11/19/2014
DRAWN	JJW	12/21/2015
REVIEWED	MKA	1/14/2015

SCHQ-15

FILE NAME = 02CONAB-HPS-sht-drainl84M.dgn	USER NAME = w31r8457	DESIGNED - JJW	REVISED - 05/16/17	STATE OF ILLINOIS DEPARTMENT OF TRANSPORTATION	SCHEDULE OF QUANTITIES DRAINAGE SCHEDULES
		DRAWN - JJW	REVISED -		
	PLOT SCALE =	CHECKED - MKA	REVISED -		
	PLOT DATE = 4/28/2017	DATE - 1/20/2017	REVISED -		SCALE: SHEET NO. OF SHEETS STA. TO STA.

F.A.I RTE.	SECTION	COUNTY	TOTAL SHEETS	SHEET NO.
74	(81-1)R & 81-1)HVBR	ROCK ISLAND	1504	72
		CONTRACT NO. 64C08		
		ILLINOIS FED. AID PROJECT		

DRAINAGE PIPE SCHEDULE

SHEET	STRUCTURE FROM	STRUCTURE TO	TRENCH BACKFILL 20800150 CU YD	STORM SEWER, CLASS A TYPE 2 550A0340 12"	550A0360 15"	550A0380 18"	550A0400 21"	550A0410 24"	550A0430 30"	550A0450 36"	STORM SEWER, CLASS A TYPE 3 550A0640 12"	550A0660 15"	550A0680 18"	550A0710 24"	550A0750 36"	550A0770 42"	550A0780 48"	550A0820 72"	SS CL A T4 550A1070 42"	SS CL A T2 550A5100 30" EQRS	STORM SEWER WATER MAIN REQUIREMENTS Z0056610 15"	Z0056626 48"	STORM SEWERS JACKED IN PLACE 55200400 15"	55200900 24"	55201600 48"
DRUL-03	A8	S40	5	16																					
DRUL-03	S42	S43	17			15																			
DRUL-03	S40	S41	57		69																				
DRUL-03	S41	S42	36			35																			
DRUL-03	S43	B37	0													128									
DRUL-05	A3	A6	17	75																					
DRUL-05	B27	B50	202													76									
DRUL-05	B56	B35	320													118									
DRUL-05	N20b	N20a	13	53																					
DRUL-05	N54	N54a	10	44																					
DRUL-05	N54a	B54b	14		51																				
DRUL-05	N55	N54a	12	58																					
DRUL-06	A1	A2	12	61																					
DRUL-06	A2	A7	65			279																			
DRUL-06	A4	A6	13	54																					
DRUL-06	A4a	A4	12	65																					
DRUL-06	A5	A6	16		65																				
DRUL-06	A6	A2	40			155																			
DRUL-06	N14	N15	8	38																					
DRUL-06	N15	N16	36		150																				
DRUL-06	N16	N17	3		11																				
DRUL-06	N18	N19	3	16																					
DRUL-07	N20	N20a	37																	36					
DRUL-07	E13b	E13	9	26																					
DRUL-07	N21	N22	7	21																					
DRUL-07	N21a	N21	2	6																					
DRUL-07	E13	E14	27			64																			
DRUL-07	E14	N22	34			52																			
DRUL-07	N22	N20	6			8																			
DRUL-09	E13a	E13	153	219																					
DRUL-09	N25	N24	30	45																					
DRUL-09	N27	N28	19	28																					
DRUL-09	N28a	N28	27	38																					
DRUL-09	N26	N24	15		21																				
DRUL-09	N28	N24	128		157																				
DRUL-09	N24	N20	184					190																	
DRUL-09	N33	N33a	312															53							
DRUL-11	N33b	N33	488															78							
DRUL-11	N40	N40a	23					21																	
DRUL-11	EX	E8	1342															200							
RDWY-14	A30a	A30	7	25																					
PIPE REMOVAL & TEMP. SUBTOTAL			572	284				35																	
SUBTOTAL			4,334	1,172	524	608	0	246	0	0	0	0	0	0	0	322	0	332	0	36	0	0	0	0	0
TOTAL			8,641	2,828	1,824	1,152	229	926	352	640	231	291	567	31	277	748	731	1,100	319	36	51	94	34	249	247

TEMPORARY DRAINAGE PIPE SCHEDULE

SHEET	STRUCTURE FROM	STRUCTURE TO	TRENCH BACKFILL 20800150 CU YD	STORM SEWER, CLASS A TYPE 2 550A0340 12"	550A0410 24"
DRUM-03	A16k	A16L	6	7	--
DRUM-03	S17a	S17	18	26	--
DRUM-04	A16c	A16d	3	7	--
DRUM-04	A16d	A16f	16	25	--
DRUM-04	A16e	A16f	5	7	--
DRUM-04	A16f	A16h	15	22	--
DRUM-04	A16g	A16h	5	7	--
DRUM-04	A16h	A17	10	13	--
DRUM-04	A16i	A16j	6	7	--
DRUM-06	T14a	Ex	0	47	--
DRUL-05	A3	B56	34	46	--
DRUL-09	Ex Inlet	E13a	8	21	--
DRUL-09	Ex Inlet	N33	6	14	--
DRUL-11	Ex MH	E8	43	--	35
DRUL-11	Ex MH	N33b	38	35	--
TOTAL			213	284	35

HANSON

LAYOUT	JJW	11/19/2014
DRAWN	JJW	12/21/2015
REVIEWED	MKA	1/13/2016

FILE NAME = D2CONAB-KPS-sht-d-sm105M.dgn

USER NAME = neato81447 | PLOT SCALE = | PLOT DATE = 5/26/2017

DESIGNED - JJW | DRAWN - JJW | CHECKED - MKA | DATE - 1/20/2017

REVISED - 1 05/16/17 | REVISED - | REVISED - | REVISED -

STATE OF ILLINOIS
DEPARTMENT OF TRANSPORTATION

SCHEDULE OF QUANTITIES
DRAINAGE SCHEDULES

SCALE: | SHEET NO. OF SHEETS | STA. TO STA.

SCHO-16

F.A.I RTE.	SECTION	COUNTY	TOTAL SHEETS	SHEET NO.
74	(81-1)R & 81-1HVBR	ROCK ISLAND	1504	73

CONTRACT NO. 64C08

ILLINOIS FED. AID PROJECT

60100060

CONCRETE HEADWALLS FOR PIPE DRAINS

ALIGNMENT	STATION	OFFSET	LT/RT	--	--	--	EACH
PR 6TH-D	421+00.00	30.00	LT	--	--	--	1
						TOTAL	1

60108206

PIPE UNDERDRAINS, TYPE 2, 6"

SHEET #	STA FROM	LT/RT	--	STA TO	LT/RT	--	LENGTH
DRUM-01	217+12.73	RT	--	215+50.00	RT	--	163
DRUM-01	215+50.00	RT	--	215+41.75	RT	--	8
DRUM-01	217+15.13	LT	--	215+44.98	LT	--	170
DRUM-01	6746+75.00	LT	--	25+43.14	LT	--	102
DRUM-01	25+43.14	LT	--	25+58.14	LT	--	15
DRUM-01	25+58.14	LT	--	25+73.14	LT	--	15
DRUM-01	25+73.14	LT	--	26+00.00	LT	--	27
DRUM-01	6746+75.00	LT (median)	--	25+43.14	LT (median)	--	106
DRUM-01	25+43.14	LT (median)	--	25+58.14	LT (median)	--	15
DRUM-01	25+58.14	LT (median)	--	25+73.14	LT (median)	--	15
DRUM-01	25+73.14	LT (median)	--	26+00.00	LT (median)	--	27
DRUM-01	6746+75.00	RT (median)	--	25+43.14	RT (median)	--	106
DRUM-01	25+43.14	RT (median)	--	25+58.14	RT (median)	--	15
DRUM-01	25+58.14	RT (median)	--	25+73.14	RT (median)	--	15
DRUM-01	25+73.14	RT (median)	--	26+00.00	RT (median)	--	27
DRUM-01	6746+75.00	RT	--	25+43.14	RT	--	106
DRUM-01	25+43.14	RT	--	25+58.14	RT	--	15
DRUM-01	25+58.14	RT	--	25+73.14	RT	--	15
DRUM-01	25+73.14	RT	--	26+00.00	RT	--	27
DRUM-01	128+98.00	LT	--	130+16.00	LT	--	118
DRUM-01	130+16.00	LT	--	130+73.32	LT	--	57
DRUM-01	128+98.00	RT	--	130+16.00	RT	--	118
DRUM-01	130+16.00	RT	--	130+75.66	RT	--	60
DRUM-03/04	215+41.75	RT	--	212+70.00	RT	--	272
DRUM-03/04	212+70.00	RT	--	211+10.75	RT	--	159
DRUM-03/04	215+44.98	LT	--	215+32.00	LT	--	13
DRUM-03/04	215+32.00	LT	--	213+32.00	LT	--	200
DRUM-03/04	213+32.00	LT	--	211+28.00	LT	--	204
DRUM-03/04	211+28.00	LT	--	210+67.18	LT	--	61
DRUM-03/04	26+00.00	LT	--	26+23.14	LT	--	23
DRUM-03/04	26+23.14	LT	--	28+84.51	LT	--	261
DRUM-03/04	26+00.00	LT (median)	--	26+13.14	LT (median)	--	13
DRUM-03/04	26+13.14	LT (median)	--	28+94.29	LT (median)	--	281
DRUM-03/04	26+00.00	RT (median)	--	26+13.14	RT (median)	--	13
DRUM-03/04	26+13.14	RT (median)	--	28+94.29	RT (median)	--	281
DRUM-03/04	26+00.00	RT	--	26+23.14	RT	--	23
DRUM-03/04	26+23.14	RT	--	26+73.43	RT	--	50
DRUM-03/04	26+73.43	RT	--	29+21.45	RT	--	248
DRUM-03/04	130+73.32	LT	--	131+50.00	LT	--	77
DRUM-03/04	131+50.00	LT	--	132+58.13	LT	--	108
DRUM-03/04	132+58.13	LT	--	133+78.13	LT	--	120
DRUM-03/04	133+78.13	LT	--	135+25.00	LT	--	147
DRUM-03/04	135+25.00	LT	--	136+50.21	LT	--	125
DRUM-03/04	130+75.66	RT	--	132+50.00	RT	--	174
DRUM-03/04	132+50.00	RT	--	134+40.00	RT	--	190
DRUM-03/04	134+40.00	RT	--	135+25.00	RT	--	85
DRUM-03/04	135+25.00	RT	--	136+01.23	RT	--	76
DRUM-03/04	425+16.70	RT	--	422+61.60	RT	--	255
DRUM-03/04	425+17.46	LT	--	422+63.32	LT	--	254
DRUM-03/04	331+35.36	LT	--	334+00.00	LT	--	265
DRUM-03/04	334+00.00	LT	--	334+65.17	LT	--	65
DRUM-03/04	334+65.17	LT	--	334+97.19	LT	--	32
DRUM-03/04	330+83.51	RT	--	332+65.00	RT	--	181
DRUM-03/04	332+65.00	RT	--	334+00.00	RT	--	135
DRUM-03/04	334+00.00	RT	--	334+64.99	RT	--	65
DRUM-06/07	422+61.60	RT	--	421+76.75	RT	--	85
DRUM-06/07	421+76.75	RT	--	420+62.66	RT	--	114
DRUM-06/07	422+63.32	LT	--	420+58.16	LT	--	205
DRUM-06/07	334+97.19	LT	--	336+25.00	LT	--	128
DRUM-06/07	336+25.00	LT	--	337+41.91	LT	--	117
DRUM-06/07	334+64.99	RT	--	336+25.00	RT	--	160
DRUM-06/07	336+25.00	RT	--	337+22.04	RT	--	97
DRUM-06/07	337+22.04	RT	--	337+58.59	RT	--	37
DRUM-06/07	646+21.89	RT	--	644+34.57	RT	--	187
DRUM-06/07	646+12.74	LT	--	643+58.72	LT	--	254

60108206

PIPE UNDERDRAINS, TYPE 2, 6"

SHEET #	STA FROM	LT/RT	--	STA TO	LT/RT	--	LENGTH
DRUL-01	7+00.00	RT	--	7+27.60	RT	--	28
DRUL-01	7+27.60	RT	--	8+36.85	RT	--	109
DRUL-01	8+36.85	RT	--	8+80.23	RT	--	60
DRUL-01	7+02.05	LT	--	7+33.69	LT	--	57
DRUL-01	7+33.69	LT	--	8+36.85	LT	--	103
DRUL-01	8+36.85	LT	--	8+80.75	LT	--	64
DRUL-01	9+56.12	LT	--	10+73.27	LT	--	141
DRUL-01	10+73.27	LT	--	10+98.19	LT	--	16
DRUL-01	10+98.19	LT	--	12+98.59	LT	--	200
DRUL-01	12+98.59	LT	--	13+34.40	LT	--	36
DRUL-01	9+57.94	RT	--	10+95.59	RT	--	168
DRUL-01	11+22.45	RT	--	13+07.13	RT	--	185
DRUL-01	13+07.13	RT	--	13+34.40	RT	--	27
DRUL-02	6000+40.82	LT	--	6003+00.00	LT	--	259
DRUL-02	6003+00.00	LT	--	6003+66.67	LT	--	67
DRUL-02	6003+66.67	LT	--	6004+00.00	LT	--	33
DRUL-02	6000+40.82	RT	--	6003+00.00	RT	--	259
DRUL-02	6003+00.00	RT	--	6003+66.67	RT	--	67
DRUL-02	6003+66.67	RT	--	6004+00.00	RT	--	33
DRUL-03	6004+00.00	RT	--	6005+87.18	RT	--	187
DRUL-03	6006+61.89	RT	--	6007+99.95	RT	--	162
DRUL-03	6007+99.95	RT	--	6009+17.03	RT	--	117
DRUL-03	6004+00.00	LT	--	6006+00.57	LT	--	201
DRUL-03	6006+99.08	LT	--	6007+99.95	LT	--	101
DRUL-03	6007+99.95	LT	--	6009+11.29	LT	--	111
DRUL-04	7004+32.40	LT	--	7006+00.00	LT	--	168
DRUL-05	7006+00.00	LT	--	7007+42.36	LT	--	157
DRUL-05	7008+52.22	RT	--	7010+22.56	RT	--	170
DRUL-05	7010+22.56	RT	--	7012+00.00	RT	--	177
DRUL-05	7008+86.78	LT	--	7010+30.44	LT	--	144
DRUL-05	7010+30.44	LT	--	7012+00.00	LT	--	170
DRUL-06	7012+00.00	LT	--	7012+25.00	LT	--	25
DRUL-06	7012+00.00	RT	--	7012+63.32	RT	--	63
DRUL-06	7013+99.00	RT	--	7015+25.00	RT	--	126
DRUL-06	7015+25.00	RT	--	7016+88.18	RT	--	163
DRUL-06	7014+12.18	LT	--	7015+20.00	LT	--	108
DRUL-06	7015+20.00	LT	--	7016+85.85	LT	--	166
DRUL-07	1909+72.58	RT	--	1911+08.00	RT	--	135
DRUL-07	1909+72.58	LT	--	1910+86.37	LT	--	114
DRUL-07	1910+86.37	LT	--	1911+54.30	LT	--	83
DRUL-07	1912+85.00	RT	--	1913+27.34	RT	--	47
DRUL-07	1912+96.46	LT	--	1914+00.00	LT	--	104
DRUL-07	1913+27.34	RT	--	1913+91.14	RT	--	64
DRUL-07	1913+91.14	RT	--	1914+00.00	RT	--	9
DRUL-07	1913+83.93	RT	--	1914+00.00	RT	--	16
DRUL-09	1914+00.00	RT	--	1916+22.95	RT	--	223
DRUL-09	1914+00.00	RT	--	1915+11.72	RT	--	112
DRUL-09	1914+00.00	LT	--	1915+41.61	LT	--	142
DRUL-09	1915+41.61	LT	--	1917+43.85	LT	--	202
						TOTAL	12861

60255500

MANHOLES TO BE ADJUSTED

ALIGNMENT	STA	OFFSET	LT/RT	SHEET	SAN/STM	--	EACH
RIVER DRIVE	3018+00.00	4.00	LT	RDWY-14	STM	--	1
RAMP-6TH-C	328+59.18	39.35	LT	DRUM-03	STM	S16	1
RAMP-6TH-C	333+61.03	82.85	RT	DRUM-03	STM	T14	1
RAMP-6TH-D	428+74.30	22.55	RT	DRUM-04	STM	A16b	1
6TH AVE.	6008+00.55	13.94	RT	DRUL-02	STM	A14b	1
6TH AVE.	6008+00.05	20.00	LT	DRUL-02	STM	A14a	1
7TH AVE.	7007+99.37	12.74	RT	DRUL-06	SAN	--	1
7TH AVE.	7010+25.52	98.26	RT	DRUL-06	STM	--	1
7TH AVE.	7010+81.18	9.80	LT	DRUL-06	STM	--	1
7TH AVE.	7011+05.14	0.00	RT	DRUL-06	STM	B56	1
7TH AVE.	7012+25.00	3.93	LT	DRUL-07	STM	A6	1
7TH AVE.	7013+79.55	0.00	LT	DRUL-07	STM	A2	1
7TH AVE.	7014+13.28	46.92	RT	DRUL-07	SAN	--	1
7TH AVE.	7015+25.00	0.00	RT	DRUL-07	STM	N15	1
7TH AVE.	7015+85.02	42.15	RT	DRUL-07	SAN	--	1
7TH AVE.	7016+07.47	19.36	RT	DRUL-07	SAN	--	1
7TH AVE.	7016+75.00	0.00	RT	DRUL-07	STM	N16	1
7TH AVE.	7018+60.00		RT	RDWY-27	STM	--	1
19TH ST.	1910+82.32	12.32	LT	DRUL-08	STM	--	1
19TH ST.	1913+15.02	2.13	LT	DRUL-08	STM	--	1
						TOTAL	20

60108200

PIPE UNDERDRAINS 6" (SPECIAL)

ALIGNMENT	FROM STA	OFFSET	LT/RT	TO STA	OFFSET	LT/RT	LENGTH
PR 6TH-D	421+00.00	20.50	LT	421+00.00	27.07	LT	7
						TOTAL	7

60256910

MANHOLES TO BE ADJUSTED WITH NEW TYPE 20 FRAME AND GRATE

ALIGNMENT	STA	OFFSET	LT/RT	SHEET	SAN/STM	--	EACH
RIVER DRIVE	3018+00.00	16.00	LT	RDWY-14	STM	--	1
RIVER DRIVE	3019+04.10	16.00	LT	RDWY-14	STM	--	1
PR I-74	25+43.14	0.00	RT	DRUM-01	STM	D9	2
PR I-74	25+58.14	0.00	RT	DRUM-01	STM	D10	2
PR I-74	25+73.14	0.00	RT	DRUM-01	STM	D11	2
						TOTAL	8

60257900

MANHOLES TO BE RECONSTRUCTED

STR	ALIGNMENT	STATION	OFFSET	LT/RT	SAN/STM	--	EACH
A48	PR I-74	34+56.83	414.76	RT	STM	--	1
T14b	Ramp 6th-C	333+55.30	28.92	RT	STM	--	1
						TOTAL	2

60260100

INLETS TO BE ADJUSTED

SHEET	ALIGNMENT	STATION	OFFSET	LT/RT	--	--	EACH
DRUL-01	21ST ST	13+24.46	20.37	RT	--	--	2
DRUL-01	21ST ST	13+24.04	20.00	LT	--	--	1
DRUL-02	6TH AVE.	6000+34.31	39.84	RT	--	--	1
DRUL-04	7TH AVE.	7004+31.64	40.00	LT	--	--	1
DRUL-05	7TH AVE.	7007+20.83	74.09	LT	--	--	1
DRUL-05	7TH AVE.	7011+50.66	4.34	RT	A3	--	1
DRUL-06	7TH AVE.	7016+88.18	37.61	RT	--	--	1
DRUL-06	7TH AVE.	7016+85.79	1.01	RT	N17	--	1
DRUL-07	19TH AVE.	1910+87.58	37.00	RT	--	--	1
DRUL-07	19TH AVE.	1911+43.09	68.64	RT	--	--	1
DRUL-07	19TH AVE.	1916+88.18	37.61	RT	--	--	1
MOT-81	7TH AVE.	7018+60.03	2.82	RT	N17a	--	1
						TOTAL	13

60265700

VALVE VAULTS TO BE ADJUSTED

ALIGNMENT	STA	OFFSET	LT/RT	SHEET	--	--	EACH
6TH AVE.	6000+55.70	8.65	LT	DRUL-03	--	--	1
6TH AVE.	6008+17.52	14.31	LT	DRUL-03	--	--	1
6TH AVE.	6008+22.72	13.97	LT	DRUL-03	--	--	1
7TH AVE.	7007+56.22	26.60	RT	DRUL-06	--	--	1
7TH AVE.	7008+13.46	87.90	LT	DRUL-06	--	--	1
7TH AVE.	7016+18.20	16.49	LT	DRUL-07	--	--	1
7TH AVE.	7016+22.42	8.64	RT	DRUL-07	--	--	1
						TOTAL	7

HANSON

LAYOUT	CBP	11/26/2014
DRAWN	CBP	11/26/2014
REVIEWED	AAP	11/26/2014

FILE NAME = D2CONAB-HPS-sht-schedule001.dgn

USER NAME = heato01447

PLOT SCALE =

PLOT DATE = 5/25/2017

DESIGNED - CBP
DRAWN - CBP
CHECKED - AAP
DATE - 1/20/2017

REVISED 05/16/17
REVISED -
REVISED -
REVISED -

STATE OF ILLINOIS
DEPARTMENT OF TRANSPORTATION

SCHEDULE OF QUANTITIES

SCALE: | SHEET NO. OF SHEETS | STA. TO STA.

SCHO-17

F.A.I RTE.	SECTION	COUNTY	TOTAL SHEETS	SHEET NO.
74	(81-1)R & 81-1)HVBR	ROCK ISLAND	1504	74

CONTRACT NO. 64C08

ILLINOIS FED. AID PROJECT

60500040

REMOVING MANHOLES

ALIGNMENT	STA	OFFSET	LT/RT	STR	–	–	EACH
RIVER DR	3012+96.74	223.80	LT	–	–	–	1
RIVER DR	3012+97.20	205.36	LT	–	–	–	1
EX I-74	261+62.21	49.04	RT	–	–	–	1
EX I-74	261+68.44	22.84	RT	–	–	–	1
EX I-74	261+89.03	57.11	LT	–	–	–	1
EX I-74	262+60.38	42.23	LT	–	–	–	1
EX I-74	263+34.98	52.10	LT	–	–	–	1
EX I-74	263+95.26	71.21	LT	–	–	–	1
EX I-74	264+48.43	26.87	LT	–	–	–	1
PR I-74	32+18.93	97.78	LT	–	–	–	1
PR I-74	33+11.38	112.38	LT	–	–	–	1
RIVER DR	3008+93.47	141.58	RT	–	–	–	1
RIVER DR	3009+54.06	220.79	RT	–	–	–	1
RIVER DR	3010+45.18	242.20	RT	–	–	–	1
RIVER DR	3011+37.43	255.25	RT	–	–	–	1
RIVER DR	3012+94.68	156.95	RT	–	–	–	1
~~RIVER DR~~	~~2013+77.82~~	~~119.44~~	~~RT~~	–	–	–	1
EX 4TH AVE	407+68.44	68.48	LT	–	–	–	1
~~EX 5TH AVE~~	~~5006+15.91~~	~~19.78~~	~~LT~~	–	–	–	1
EX 5TH AVE	5006+16.14	19.49	RT	–	–	–	1
EX 5TH AVE	5001+71.68	65.16	RT	–	–	–	1
EX 5TH AVE	5002+06.66	157.56	RT	–	–	–	1
EX 5TH AVE	5002+22.92	227.42	RT	–	–	–	1
EX 5TH AVE	5002+40.04	54.86	RT	–	–	–	1
EX 5TH AVE	5002+67.01	223.70	RT	–	–	–	1
EX 5TH AVE	5002+76.42	147.75	RT	–	–	–	1
EX 5TH AVE	5002+95.70	8.09	RT	–	–	–	1
EX 5TH AVE	5003+05.10	223.05	RT	–	–	–	1
EX 5TH AVE	5003+39.05	178.47	RT	–	–	–	1
6TH AVE	6004+01.33	56.23	LT	–	–	–	1
6TH AVE	6004+49.33	60.25	LT	–	–	–	1
6TH AVE	6004+90.39	60.05	LT	–	–	–	1
6TH AVE	6004+17.20	46.73	RT	–	–	–	1
6TH AVE	6004+44.89	46.60	RT	–	–	–	1
7TH AVE	7011+65.44	64.36	LT	–	–	–	1
7TH AVE	7012+45.44	75.03	LT	–	–	–	1
7TH AVE	7013+10.64	52.57	LT	–	–	–	1
7TH AVE	7011+09.30	1.53	RT	–	–	–	1
7TH AVE	7012+00.52	2.62	RT	–	–	–	1
7TH AVE	7012+65.92	7.55	LT	–	–	–	1
7TH AVE	7011+15.68	69.70	RT	–	–	–	1
7TH AVE	7011+41.87	106.05	RT	–	–	–	1
7TH AVE	7011+59.95	86.65	RT	–	–	–	1
7TH AVE	7012+13.03	113.34	RT	–	–	–	1
7TH AVE	7012+76.30	59.61	RT	–	–	–	1
7TH AVE	7013+35.25	85.66	RT	–	–	–	1
PR I-74	46+64.40	3.75	LT	–	–	–	1
PR I-74	46+46.84	72.83	RT	–	–	–	1
PR I-74	46+52.46	15.04	RT	–	–	–	1
PR I-74	49+44.56	180.00	RT	–	–	–	1
PR I-74	49+37.87	161.17	RT	–	–	–	1
19TH ST	1914+87.32	12.37	RT	–	–	–	1
19TH ST	1915+38.83	30.71	RT	–	–	–	1
19TH ST	1915+41.61	12.04	RT	–	–	–	1
19TH ST	1916+40.71	28.82	RT	–	–	–	1
~~19TH ST~~	~~1925+39.56~~	~~3.16~~	~~RT~~	–	–	–	1
RAMP 3-N	1070+02.44	6.38	LT	A16d	–	–	1
RAMP 3-N	1069+77.28	6.18	LT	A16f	–	–	1
RAMP 3-N	1069+55.07	6.04	LT	A16h	–	–	1
						TOTAL	59

60500060

REMOVING INLETS

ALIGNMENT	STA	OFFSET	LT/RT	STR #	–	–	EACH
RIVER DR	3012+85.45	193.85	LT	–	–	–	1
RIVER DR	3014+06.77	235.12	RT	–	–	–	1
RIVER DR	3016+15.21	113.13	RT	–	–	–	1
RIVER DR	3015+72.76	177.44	RT	–	–	–	1
RIVER DR	3015+58.93	213.71	RT	–	–	–	1
RIVER DR	3015+34.51	243.17	RT	–	–	–	1
RIVER DR	3015+66.41	171.82	RT	–	–	–	1
RIVER DR	3015+05.17	98.07	RT	–	–	–	1
EX 4TH AVE	405+96.34	179.16	RT	–	–	–	1
EX 4TH AVE	406+72.57	180.49	RT	–	–	–	1
EX 4TH AVE	407+49.94	115.36	LT	–	–	–	1
EX 4TH AVE	407+93.52	116.63	RT	–	–	–	1
EX 4TH AVE	408+27.35	198.25	RT	–	–	–	1
EX 5TH AVE	5006+00.00	21.04	RT	–	–	–	1
EX 5TH AVE	5006+04.18	21.03	LT	–	–	–	1
EX 5TH AVE	5006+23.28	29.64	LT	–	–	–	1
EX 5TH AVE	5006+24.38	34.52	RT	–	–	–	1
EX 5TH AVE	5006+49.64	30.25	LT	–	–	–	1
6TH AVE	6005+33.35	25.07	LT	–	–	–	1
6TH AVE	6005+04.66	24.83	LT	–	–	–	1
6TH AVE	6004+53.95	24.76	LT	–	–	–	1
6TH AVE	6004+53.89	16.25	RT	–	–	–	1
6TH AVE	6005+04.42	16.29	RT	–	–	–	1
6TH AVE	6004+04.53	24.76	LT	–	–	–	1
6TH AVE	6004+03.48	16.55	RT	–	–	–	1
6TH AVE	6003+43.52	16.58	RT	–	–	–	1
6TH AVE	6008+00.69	21.64	RT	–	–	–	1
7TH AVE	7006+29.89	11.87	LT	–	–	–	1
7TH AVE	7011+90.30	88.03	LT	–	–	–	1
7TH AVE	7013+13.97	79.44	RT	–	–	–	1
7TH AVE	7012+94.49	49.52	RT	–	–	–	1
7TH AVE	7011+35.88	58.16	RT	–	–	–	1
7TH AVE	7013+27.68	46.38	LT	–	–	–	1
7TH AVE	7013+31.79	75.75	LT	–	–	–	1
7TH AVE	7015+36.16	52.73	LT	–	–	–	1
7TH AVE	7011+29.58	99.24	LT	–	–	–	1
7TH AVE	7013+54.87	49.33	RT	–	–	–	1
7TH AVE	7011+09.93	73.63	LT	–	–	–	1
7TH AVE	7016+85.79	1.01	RT	–	–	–	1
7TH AVE	7018+60.03	2.82	RT	–	–	–	1
PR I-74	40+95.20	164.49	RT	T14a	–	–	1
PR I-74	46+16.11	133.56	RT	–	–	–	1
PR I-74	46+27.24	5.94	LT	–	–	–	1
PR I-74	46+75.07	122.52	RT	–	–	–	1
19TH ST	1913+10.64	61.59	LT	–	–	–	1
19TH ST	1913+14.80	23.87	RT	–	–	–	1
19TH ST	1916+43.26	63.00	RT	–	–	–	1
19TH ST	1916+92.41	8.74	LT	–	–	–	1
RAMP 3-N	1069+10.38	12.91	LT	A16k	–	–	1
RAMP 3-N	167+56.00	18.48	LT	S17a	–	–	1
RAMP 3-N	1070+02.28	12.85	LT	A16c	–	–	1
RAMP 3-N	1069+77.28	12.88	LT	A16e	–	–	1
RAMP 3-N	1069+55.07	12.91	LT	A16g	–	–	1
RAMP 3-N	1069+32.76	12.88	LT	A16i	–	–	1
						TOTAL	48

60600095

CLASS SI CONCRETE (OUTLET)

ALIGNMENT	STA FROM	STA TO	NOTES	CU YD
6TH AVE	6006+93.17	6006+96.82	DISTRICT 2 STANDARD 21.2	1.3
			TOTAL	1.3

60600605

CONCRETE CURB, TYPE B

ALIGNMENT	STA	OFFSET	LT/RT	STA	OFFSET	LT/RT	FOOT
PR RD-H	212+50.88	16.29	RT	212+65.90	16.00	RT	15.0
PR RD-H	217+15.18	22.00	LT	217+30.16	22.00	LT	15.0
PR 6TH-D	422+59.98	14.46	RT	422+75.00	14.13	RT	15.0
PR 6TH-D	425+13.01	22.00	LT	425+28.03	22.00	LT	15.0
						TOTAL	60.0

60603800

COMBINATION CONCRETE CURB AND GUTTER, TYPE B-6.12

ALIGNMENT	STA FROM	OFFSET	LT/RT	STA TO	OFFSET	LT/RT	FOOT
21ST ST S	7+00.00	14.03'	RT	8+79.85	0.00'	RT	197.5
21ST ST S	7+00.99	23.13'	LT	8+79.85	0.00'	LT	246.0
21ST ST N	9+57.00	0.00'	LT	13+05.00	24.22'	LT	387.5
21ST ST N	9+57.00	0.00'	RT	11+01.59	29.00'	RT	201.0
21ST ST N	11+21.37	29.00'	RT	13+05.00	21.04'	RT	179.0
						TOTAL	1,211.0

HANSON

LAYOUT	CBP	11/26/2014
DRAWN	CBP	11/26/2014
REVIEWED	AAP	11/26/2014

FILE NAME = D2CONAB-HPS-sht-schedule001.dgn

USER NAME = heato01447

PLOT SCALE =

PLOT DATE = 9/25/2017

DESIGNED - CBP
DRAWN - CBP
CHECKED - AAP
DATE - 1/20/2017

REVISED - 05/16/17
REVISED -
REVISED -
REVISED -

STATE OF ILLINOIS
DEPARTMENT OF TRANSPORTATION

SCHEDULE OF QUANTITIES

SCALE: | SHEET NO. OF SHEETS | STA. TO STA.

SCHQ-18

F.A.I. RTE.	SECTION	COUNTY	TOTAL SHEETS	SHEET NO.
74	(81-1)R & 81-1HVBR	ROCK ISLAND	1504	75

CONTRACT NO. 64C08

ILLINOIS FED. AID PROJECT

70300210

TEMPORARY PAVEMENT MARKING LETTERS AND SYMBOLS

ALIGNMENT	STA	OFFSET	LT/RT	DESCRIPTION	# OF COATS	SQ FT	NOTES:
7TH AVE	7002+63	20	RT	TURN ARROW	1	15.6	PRE-STAGE 1
7TH AVE	7003+24	20	RT	TURN ARROW	1	15.6	PRE-STAGE 1
7TH AVE	7001+93	19	RT	TURN ARROW	1	15.6	PRE-STAGE 2
7TH AVE	7001+93	26	RT	TURN ARROW	1	15.6	PRE-STAGE 2
7TH AVE	7001+93	26	RT	TURN ARROW	1	15.6	PRE-STAGE 2
7TH AVE	7002+93	26	RT	TURN ARROW	1	15.6	PRE-STAGE 2
7TH AVE	7016+91	21	LT	TURN ARROW	1	15.6	PRE-STAGE 2
7TH AVE	7016+91	28	LT	TURN ARROW	1	15.6	PRE-STAGE 2
7TH AVE	7017+91	20	LT	TURN ARROW	1	15.6	PRE-STAGE 2
7TH AVE	7017+91	27	LT	TURN ARROW	1	15.6	PRE-STAGE 2
7TH AVE	7004+34	10	LT	TURN ARROW	1	15.6	PRE-STAGE 3 TO 3-2
7TH AVE	7004+96	17	RT	TURN ARROW	1	15.6	PRE-STAGE 3 TO 3-2
7TH AVE	7005+04	11	LT	TURN ARROW	1	15.6	PRE-STAGE 3 TO 3-2
7TH AVE	7005+54	13	LT	TURN ARROW	1	15.6	PRE-STAGE 3 TO 3-2
7TH AVE	7006+03	5	RT	TURN ARROW	1	15.6	PRE-STAGE 3 TO 3-2
7TH AVE	7006+13	52	RT	TURN ARROW	1	15.6	PRE-STAGE 3 TO 3-2
7TH AVE	7006+58	52	RT	TURN ARROW	1	15.6	PRE-STAGE 3 TO 3-2
7TH AVE	7007+02	55	RT	TURN ARROW	1	15.6	PRE-STAGE 3 TO 3-2
7TH AVE	7007+07	2	RT	TURN ARROW	1	15.6	PRE-STAGE 3 TO 3-2
7TH AVE	7008+79	1	LT	TURN ARROW	1	15.6	PRE-STAGE 3 TO 3-2
7TH AVE	7008+79	14	LT	TURN ARROW	1	15.6	PRE-STAGE 3 TO 3-2
7TH AVE	7008+79	51	LT	TURN ARROW	1	15.6	PRE-STAGE 3 TO 3-2
7TH AVE	7009+98	2	LT	TURN ARROW	1	15.6	PRE-STAGE 3 TO 1-0
7TH AVE	7009+98	14	LT	TURN ARROW	1	15.6	PRE-STAGE 3 TO 1-0
7TH AVE	7009+98	46	LT	TURN ARROW	1	15.6	PRE-STAGE 3 TO 3-2
7TH AVE	7010+05	19	RT	TURN ARROW	1	15.6	PRE-STAGE 3 TO 1-0
7TH AVE	7011+15	19	RT	TURN ARROW	1	15.6	PRE-STAGE 3 TO 1-0
7TH AVE	7011+21	1	LT	TURN ARROW	1	15.6	PRE-STAGE 3 TO 1-0
7TH AVE	7011+21	13	LT	TURN ARROW	1	15.6	PRE-STAGE 3 TO 1-0
19TH ST	1910+64	5	RT	TURN ARROW	1	15.6	PRE-STAGE 3 TO 3-2
19TH ST	1911+24	5	RT	TURN ARROW	1	15.6	PRE-STAGE 3 TO 3-2
19TH ST	1911+22	30	RT	TRN/THRU ARW	1	26.0	PRE-STAGE 3 TO 3-2
19TH ST	1913+48	5	LT	TURN ARROW	1	15.6	PRE-STAGE 3 TO 3-4
19TH ST	1914+41	4	LT	TURN ARROW	1	15.6	PRE-STAGE 3 TO 3-4
19TH ST	1915+50	5	LT	TURN ARROW	1	15.6	PRE-STAGE 3 TO 2-0
19TH ST	1927+32	5	RT	TURN ARROW	1	15.6	PRE-STAGE 3 TO 2-0
19TH ST	1927+91	5	RT	TURN ARROW	1	15.6	PRE-STAGE 3 TO 2-0
7TH AVE	7012+83	4	LT	TURN ARROW	1	15.6	STAGE 1-0
7TH AVE	7013+37	4	LT	TURN ARROW	1	15.6	STAGE 1-0
7TH AVE	7014+01	3	LT	TURN ARROW	1	15.6	STAGE 1-0
7TH AVE	7009+73	2	LT	TURN ARROW	1	15.6	STAGE 1-1 TO 1-4
7TH AVE	7009+73	14	LT	TURN ARROW	1	15.6	STAGE 1-1 TO 1-4
7TH AVE	7010+72	32	RT	TURN ARROW	1	15.6	STAGE 1-1 TO 1-2
7TH AVE	7011+16	30	RT	TURN ARROW	1	15.6	STAGE 1-1 TO 1-2
7TH AVE	7013+25	12	RT	TURN ARROW	1	15.6	STAGE 1-1 TO 1-2
7TH AVE	7013+93	12	RT	TURN ARROW	1	15.6	STAGE 1-1 TO 1-2
RAMP N-7	74+87	33	LT	TURN ARROW	2	31.2	STAGE 1-1
RAMP N-7	75+94	46	LT	TURN ARROW	2	31.2	STAGE 1-1
RAMP N-7	75+98	15	RT	TURN ARROW	2	31.2	STAGE 1-2
RAMP N-7	75+86	5	LT	TURN ARROW	2	31.2	STAGE 1-2
7TH AVE	7010+51	3	RT	TURN ARROW	1	15.6	STAGE 1-3 TO 1-4
7TH AVE	7011+09	3	LT	TURN ARROW	1	15.6	STAGE 1-3 TO 1-4
7TH AVE	7012+78	15	LT	TURN ARROW	1	15.6	STAGE 1-3 TO 1-4
7TH AVE	7013+47	16	LT	TURN ARROW	1	15.6	STAGE 1-3 TO 1-4
7TH AVE	7013+73	46	LT	TURN ARROW	1	15.6	STAGE 1-3 TO 1-4
7TH AVE	7014+59	48	LT	TURN ARROW	1	15.6	STAGE 1-3 TO 1-4
RAMP N-7	74+87	33	LT	TURN ARROW	2	31.2	STAGE 1-3 TO 1-4
RAMP S-7	77+35	62	RT	TURN ARROW	2	31.2	STAGE 1-3
RAMP S-7	77+40	78	RT	TURN ARROW	2	31.2	STAGE 1-3
RAMP S-7	77+78	53	RT	TURN ARROW	2	31.2	STAGE 1-3
7TH AVE	7002+63	20	RT	TURN ARROW	1	15.6	STAGE 1-5
7TH AVE	7003+24	20	RT	TURN ARROW	1	15.6	STAGE 1-5
						70300210 SUB-TOTAL	1102

70300210

TEMPORARY PAVEMENT MARKING LETTERS AND SYMBOLS

ALIGNMENT	STA	OFFSET	LT/RT	DESCRIPTION	# OF COATS	SQ FT	NOTES:
7TH AVE	7009+98	2	LT	TURN ARROW	1	15.6	STAGE 2-0 TO 3-2
7TH AVE	7009+98	14	LT	TURN ARROW	1	15.6	STAGE 2-0 TO 3-2
7TH AVE	7010+79	46	LT	TURN ARROW	1	15.6	STAGE 2-0 TO 3-0
7TH AVE	7011+21	1	LT	TURN ARROW	1	15.6	STAGE 2-0 TO 3-2
7TH AVE	7011+21	13	LT	TURN ARROW	1	15.6	STAGE 2-0 TO 3-2
6TH AVE	5998+40	5	LT	TURN ARROW	1	15.6	STAGE 2 TO 3-0
6TH AVE	5998+40	2	RT	TURN ARROW	1	15.6	STAGE 2 TO 3-0
6TH AVE	5999+09	7	LT	TURN ARROW	1	15.6	STAGE 2 TO 3-0
6TH AVE	5999+09	1	RT	TURN ARROW	1	15.6	STAGE 2 TO 3-0
19TH ST	1897+50	4	RT	TURN ARROW	1	15.6	STAGE 2
19TH ST	1898+19	3	RT	TURN ARROW	1	15.6	STAGE 2
RIVER DR	3013+51	29	RT	TRN/THRU ARW	1	26.0	STAGE 2
RIVER DR	3013+52	41	RT	TURN ARROW	1	15.6	STAGE 2
RIVER DR	3014+29	30	RT	TRN/THRU ARW	1	26.0	STAGE 2
RIVER DR	3014+30	43	RT	TURN ARROW	1	15.6	STAGE 2
7TH AVE	7010+05	19	RT	TURN ARROW	1	15.6	WINTER STAGE
7TH AVE	7011+15	19	RT	TURN ARROW	1	15.6	WINTER STAGE
7TH AVE	7012+23	20	RT	TURN ARROW	1	15.6	WINTER STAGE
7TH AVE	7002+63	20	RT	TURN ARROW	1	15.6	STAGE 3-1
7TH AVE	7003+24	20	RT	TURN ARROW	1	15.6	STAGE 3-1
7TH AVE	7011+21	46	LT	TURN ARROW	1	15.6	STAGE 3-1
RIVER DR	3019+45	16	RT	TURN ARROW	1	15.6	STAGE 3-3
RIVER DR	3020+19	14	RT	TURN ARROW	1	15.6	STAGE 3-3
RIVER DR	3021+82	28	LT	TURN ARROW	1	15.6	STAGE 3-3
						70300210 SUB-TOTAL	396
						TOTAL	1498

70300220

TEMPORARY PAVEMENT MARKING - LINE 4"

ALIGNMENT	STA FR	LT/RT	STA TO	LT/RT	DESCRIPTION	# OF COATS	FOOT	NOTES
RAMP 3-N	368+85	RT	371+03	RT	YELLOW	2	480	STAGE 2-0
RAMP N-3	165+12	RT	167+71	LT	WHITE	2	516	STAGE 2-0
TEMP RAMP N-3	1067+70	LT	1071+34	LT	WHITE	2	804	STAGE 2-0
							0	
RAMP 3-N	352+57	RT	371+04	RT	YELLOW	2	3,889	STAGE 2
RAMP 3-N	358+72	RT	370+27	LT	WHITE	2	2,301	STAGE 2
RAMP 3-N	353+34	RT	370+33	RT	SKIP-DASH WHITE	2	885	STAGE 2
RAMP N-3	165+26	LT	167+19	LT	YELLOW	2	265	STAGE 2
TEMP RAMP N-3	1066+63	LT	1071+34	LT	YELLOW	2	934	STAGE 2
TEMP RAMP N-3	1066+63	LT	1071+34	LT	WHITE	2	942	STAGE 2
							0	
RAMP N-3	166+03	LT	167+25	LT	YELLOW	2	236	WINTER STAGE
TEMP RAMP N-3	1067+23	LT	1070+97	LT	WHITE	2	747	WINTER STAGE
TEMP RAMP N-3	1067+23	LT	1070+98	LT	YELLOW	2	737	WINTER STAGE
RAMP RD-H	210+90	RT	217+58	RT	WHITE	2	1,351	WINTER STAGE
RAMP RD-H	210+54	LT	217+59	LT	YELLOW	2	1,413	WINTER STAGE
RAMP RD-H	210+78	LT	214+77	LT	SKIP-DASH WHITE	2	200	WINTER STAGE
RAMP 6TH-D	420+58	RT	439+80	LT	WHITE	2	3,780	WINTER STAGE
RAMP 6TH-D	420+58	LT	430+64	LT	YELLOW	2	2,010	WINTER STAGE
RAMP 6TH-D	420+58	LT	421+91	LT	SKIP-DASH WHITE	2	70	WINTER STAGE
ML I-74	29+30	LT	48+89	LT	WHITE	2	3,920	WINTER STAGE
ML I-74	6747+17	RT	48+99	LT	YELLOW	2	5,028	WINTER STAGE
							0	
RAMP 6TH-D	422+60	LT	430+86	LT	YELLOW	2	2,160	STAGE 3
RAMP 6TH-D	428+00	RT	439+80	RT	WHITE	2	3,560	STAGE 3
RAMP 6TH-C	316+99	LT	327+00	LT	WHITE	2	2,351	STAGE 3
RAMP 6TH-C	321+09	LT	327+00	LT	YELLOW	2	1,472	STAGE 3
ML I-74	25+48	LT	49+01	LT	WHITE	2	11,872	STAGE 3
ML I-74	6747+17	LT	48+95	LT	YELLOW	2	12,318	STAGE 3
							0	
ML I-74	6747+19	RT	6751+00	RT	WHITE	2	762	STAGE 3-4
ML I-74	6747+19	RT	6793+94	RT	YELLOW	2	10,110	STAGE 3-4
ML I-74	34+35	RT	45+62	RT	WHITE	2	2,962	STAGE 3-4
ML I-74	23+83	RT	49+11	RT	YELLOW	2	5,056	STAGE 3-4
						70300220 SUB-TOTAL	*83,132*	

70300220

TEMPORARY PAVEMENT MARKING - LINE 4"

ALIGNMENT	STA FR	LT/RT	STA TO	LT/RT	DESCRIPTION	# OF COATS	FOOT	NOTES
7TH AVE	7000+51	RT	7011+68	RT	WHITE	1	789	PRE-STAGE 1
7TH AVE	7004+22	RT	7005+10	RT	DOT-DASH WHITE	1	22	PRE-STAGE 1
7TH AVE	7008+28	RT	7026+41	LT	YELLOW	1	3,186	PRE-STAGE 1
RAMP S-7	76+85	RT	84+13	RT	YELLOW	2	524	PRE-STAGE 1
RAMP S-7	76+85	RT	84+13	RT	WHITE	2	290	PRE-STAGE 1
7TH AVE	7000+38	RT	7018+01	LT	WHITE	1	1,309	PRE-STAGE 2
7TH AVE	7000+51	RT	7025+10	LT	SKIP-DASH WHITE	1	459	PRE-STAGE 2
7TH AVE	7012+98	RT	7022+58	LT	YELLOW	1	2,171	PRE-STAGE 2
19TH ST	1902+82	RT	1908+19	RT	WHITE	1	735	PRE-STAGE 2
6TH AVE	5997+58	RT	6000+17	RT	WHITE	1	267	PRE-STAGE 2
RAMP N-7	72+60	LT	76+06	LT	WHITE	2	702	PRE-STAGE 2
RAMP S-7	77+86	RT	81+86	RT	YELLOW	2	793	PRE-STAGE 2
RAMP S-7	76+92	RT	80+83	RT	WHITE SKIP-DASH	2	195	PRE-STAGE 2
RAMP 7-S	77+54	LT	78+87	LT	WHITE	2	275	PRE-STAGE 2
7TH AVE	7000+50	RT	7025+10	LT	SKIP-DASH WHITE	1	515	PRE-STAGE 3
7TH AVE	7004+25	RT	7022+58	LT	YELLOW	1	1,198	PRE-STAGE 3
7TH AVE	7004+28	LT	7016+22	LT	WHITE	1	3,761	PRE-STAGE 3
7TH AVE	7007+02	LT/RT	7008+88	LT/RT	ISLAND DIAGONALS	1	345	PRE-STAGE 3
7TH AVE	7000+51	RT	7011+25	LT	DOT-DASH WHITE	1	124	PRE-STAGE 3
19TH ST	1902+50	RT	1911+60	LT	SKIP-DASH WHITE	1	203	PRE-STAGE 3
19TH ST	1908+69	RT	1911+37	LT	YELLOW	1	545	PRE-STAGE 3
19TH ST	1908+77	RT	1911+37	RT	WHITE	1	229	PRE-STAGE 3
19TH ST	1913+20	RT	1928+20	LT	YELLOW	1	2,527	PRE-STAGE 3
19TH ST	1913+20	RT	1920+95	RT	WHITE	1	1,576	PRE-STAGE 3
19TH ST	1913+23	LT	1920+95	RT	SKIP-DASH WHITE	1	277	PRE-STAGE 3
RAMP N-7	73+86	LT	76+23	LT	WHITE	2	1,088	PRE-STAGE 3
RAMP 7-S	77+96	RT	79+16	LT	WHITE	2	555	PRE-STAGE 3
7TH AVE	7010+63	RT	7023+40	LT	WHITE	1	2,119	STAGE 1-0
7TH AVE	7010+63	RT	7023+39	LT	SKIP-DASH WHITE	1	572	STAGE 1-0
7TH AVE	7011+19	LT	7015+01	RT	DOT-DASH WHITE	1	181	STAGE 1-0
7TH AVE	7012+55	RT	7022+52	LT	YELLOW	1	1,931	STAGE 1-0
RAMP 7-N	75+14	RT	76+44	LT	WHITE	2	619	STAGE 1-0
RAMP S-7	76+61	LT	80+42	RT	WHITE	2	1,546	STAGE 1-0
7TH AVE	7008+45	RT	7020+44	LT	SKIP-DASH WHITE	1	477	STAGE 1-1
7TH AVE	7008+51	RT	7020+46	RT	YELLOW	1	1,264	STAGE 1-1
7TH AVE	7014+11	RT	7018+03	RT	DOUBLE YELLOW	1	786	STAGE 1-1
7TH AVE	7009+26	LT	7015+56	RT	DOT-DASH WHITE	1	22	STAGE 1-1
7TH AVE	7009+26	LT	7015+56	RT	DOT-DASH YELLOW	1	88	STAGE 1-1
7TH AVE	7009+75	LT	7020+45	LT	WHITE	1	1,932	STAGE 1-1
RAMP 7-N	73+88	RT	76+60	LT	WHITE	2	627	STAGE 1-1
RAMP S-7	76+92	RT	80+16	RT	SKIP-DASH WHITE	2	227	STAGE 1-1
7TH AVE	7009+91	RT	7015+62	LT	YELLOW	1	429	STAGE 1-2
7TH AVE	7010+86	LT	7016+96	LT	WHITE	1	952	STAGE 1-2
7TH AVE	7014+02	LT	7017+35	RT	SKIP-DASH WHITE	1	130	STAGE 1-2
7TH AVE	7011+15	LT	7011+63	LT	DOT-DASH WHITE	1	19	STAGE 1-2
7TH AVE	7011+34	RT	7011+74	RT	DOT-DASH YELLOW	1	10	STAGE 1-2
RAMP N-7	74+27	LT	76+39	RT	WHITE	2	920	STAGE 1-2
RAMP 7-N	74+82	LT	76+29	LT	WHITE	2	361	STAGE 1-2
RAMP 7-N	74+82	RT	76+45	LT	YELLOW	2	408	STAGE 1-2
RAMP S-7	74+27	LT	76+34	RT	YELLOW	2	267	STAGE 1-2
RAMP S-7	74+27	LT	76+09	RT	WHITE	2	243	STAGE 1-2
7TH AVE	7008+84	RT	7022+47	LT	SKIP-DASH WHITE	1	537	STAGE 1-3
7TH AVE	7006+70	RT	7022+47	LT	YELLOW	1	1,630	STAGE 1-3
7TH AVE	7008+89	RT	7016+61	LT	DOT-DASH WHITE	1	320	STAGE 1-3
7TH AVE	7010+27	RT	7019+86	RT	WHITE	1	1,384	STAGE 1-3
7TH AVE	7012+62	LT	7018+03	LT	DOUBLE YELLOW	1	519	STAGE 1-3
RAMP N-7	73+86	LT	76+23	LT	WHITE	2	1,202	STAGE 1-3
RAMP 7-N	75+64	RT	76+34	LT	WHITE	2	653	STAGE 1-3
RAMP S-7	76+42	RT	80+96	LT	WHITE	2	1,180	STAGE 1-3
RAMP S-7	77+31	RT	77+88	RT	YELLOW	2	120	STAGE 1-3
RAMP 7-S	77+25	LT	78+22	LT	YELLOW	2	196	STAGE 1-3
RAMP 7-S	77+85	RT	77+96	RT	WHITE	2	76	STAGE 1-3
7TH AVE	7011+64	RT	7017+07	RT	WHITE	1	720	STAGE 1-4
7TH AVE	7012+62	LT	7014+62	LT	YELLOW	1	218	STAGE 1-4
RAMP S-7	76+61	LT	84+13	RT	YELLOW	2	1,569	STAGE 1-4
RAMP S-7	76+61	LT	77+57	RT	WHITE	2	262	STAGE 1-4
							70300220 SUB-TOTAL	*51,376*

SCH0-20

HANSON

LAYOUT	CBP	11/26/2014
DRAWN	CBP	11/26/2014
REVIEWED	AAP	11/26/2014

FILE NAME = D2CONAB-HPS-sht-schedule001.dgn	USER NAME = heato01447	DESIGNED - CBP	REVISED - 05/16/17
		DRAWN - CBP	REVISED -
	PLOT SCALE =	CHECKED - AAP	REVISED -
	PLOT DATE = 5/30/2017	DATE - 1/20/2017	REVISED -

STATE OF ILLINOIS
DEPARTMENT OF TRANSPORTATION

SCHEDULE OF QUANTITIES

SCALE: | SHEET NO. OF SHEETS | STA. TO STA.

F.A.I RTE.	SECTION	COUNTY	TOTAL SHEETS	SHEET NO.
74	(81-1)R & 81-1)HVBR	ROCK ISLAND	1504	77

CONTRACT NO. 64C08

ILLINOIS FED. AID PROJECT

70300220

TEMPORARY PAVEMENT MARKING - LINE 4"

ALIGNMENT	STA FR	LT/RT	STA TO	LT/RT	DESCRIPTION	# OF COATS	FOOT	NOTES
7TH AVE	7000+51	RT	7025+33	LT	YELLOW	1	3,337	STAGE 1-5
7TH AVE	7008+73	LT	7011+31	LT	DOT-DASH WHITE	1	284	STAGE 1-5
7TH AVE	7000+37	RT	7013+20	RT	WHITE	1	1,071	STAGE 1-5
RAMP N-7	72+62	LT	73+86	LT	YELLOW	2	250	STAGE 1-5
RAMP 7-N	75+01	RT	76+34	LT	YELLOW	2	292	STAGE 1-5
7TH AVE	7008+45	RT	7026+41	LT	SKIP-DASH WHITE	1	746	STAGE 2
7TH AVE	7008+50	RT	7022+59	LT	YELLOW	1	2,754	STAGE 2
7TH AVE	7008+76	LT	7016+33	LT	WHITE	1	1,525	STAGE 2
7TH AVE	7010+83	LT	7013+56	LT	DOT-DASH WHITE	1	284	STAGE 2
19TH ST	1897+03	RT	1897+27	RT	DOT-DASH WHITE	1	10	STAGE 2
19TH ST	1897+27	RT	1898+41	RT	SKIP-DASH WHITE	1	29	STAGE 2
19TH ST	1897+31	RT	1898+31	RT	DOUBLE YELLOW	1	200	STAGE 2
19TH ST	1897+31	RT	1898+31	RT	WHITE	1	100	STAGE 2
19TH ST	1898+31	RT	1899+31	RT	YELLOW	1	207	STAGE 2
6TH AVE	5996+33	RT	5999+50	RT	WHITE	1	439	STAGE 2
6TH AVE	5996+33	LT	5998+28	LT	SKIP-DASH WHITE	1	49	STAGE 2
6TH AVE	5996+33	LT	5999+37	LT	YELLOW	1	305	STAGE 2
RIVER DR	3012+10	RT	3015+31	RT	DOT-DASH WHITE	1	251	STAGE 2
RIVER DR	3013+45	RT	3013+93	RT	WHITE	1	243	STAGE 2
19TH ST	1897+26	RT	1899+31	RT	SKIP-DASH WHITE	1	51	WINTER STAGE
19TH ST	1897+27	LT	1898+41	LT	WHITE	1	114	WINTER STAGE
19TH ST	1897+31	RT	1899+31	RT	DOUBLE YELLOW	1	400	WINTER STAGE
RIVER DR	3011+85	RT	3014+93	RT	SKIP-DASH WHITE	1	309	WINTER STAGE
RIVER DR	3012+09	LT	3020+43	LT	YELLOW	1	838	WINTER STAGE
RIVER DR	3012+09	RT	3014+93	RT	WHITE	1	525	WINTER STAGE
							0	
7TH AVE	7000+37	RT	7012+27	LT	WHITE	1	101	STAGE 3-0
19TH ST	1906+68	LT	1910+87	LT	WHITE	1	420	STAGE 3-0
7TH AVE	7000+37	RT	7012+48	RT	WHITE	1	1,369	STAGE 3-1
7TH AVE	7000+51	RT	7001+77	RT	YELLOW	1	135	STAGE 3-1
7TH AVE	7004+21	RT	7004+77	RT	DOT-DASH WHITE	1	28	STAGE 3-1
19TH ST	1906+67	LT	1910+87	LT	SKIP-DASH WHITE	1	89	STAGE 3-1
7TH AVE	7007+37	RT	7008+41	LT	WHITE	1	458	STAGE 3-2
7TH AVE	7008+45	RT	7012+00	RT	SKIP-DASH WHITE	1	89	STAGE 3-2
7TH AVE	7010+37	LT	7013+79	LT	YELLOW	1	456	STAGE 3-2
RIVER DR	3016+21	RT	3016+54	LT	YELLOW	1	41	STAGE 3-2
RIVER DR	3010+29	RT	3026+60	LT	YELLOW	1	2,123	STAGE 3-3
RIVER DR	3021+65	LT	3022+51	LT	WHITE	1	86	STAGE 3-3
							70300220 SUB-TOTAL	*20,011*
							TOTAL	**154,519**

70300240

TEMPORARY PAVEMENT MARKING - LINE 6"

ALIGNMENT	STA FR	STA TO	OFFSET	DESCRIPTION	STAGE	# OF COATS	FOOT
PR I-74	6747+17	48+92	LT	SKIP DASH LANE LINE	WINT.	2	1,254
PR I-74	6747+17	48+96	LT	SKIP DASH LANE LINE	WINT.	2	1,256
PR I-74	6747+17	48+89	LT	SKIP DASH LANE LINE	3	2	1,254
PR I-74	6747+17	48+98	LT	SKIP DASH LANE LINE	3	2	1,258
PR I-74	6747+19	6751+00	RT	SKIP DASH LANE LINE	3-4	2	190
						TOTAL	5,212

70300250

TEMPORARY PAVEMENT MARKING - LINE 8"

ALIGNMENT	STA FR	STA TO	OFFSET	DESCRIPTION	STAGE	# OF COATS	FOOT
RAMP 6TH-D	430+64	434+34	LT	SOLID WHITE	WINT.	2	1,480
RAMP 6TH-D	434+34	435+76	LT	SKIP-DASH WHITE	WINT.	2	71
RAMP 6TH-D	430+86	434+09	LT	SOLID WHITE	3	2	1,012
RAMP 6TH-C	319+39	321+09	LT	SOLID WHITE	3	2	680
						TOTAL	3,243

70300280

TEMPORARY PAVEMENT MARKING - LINE 24"

ALIGNMENT	STA FR	LT/RT	DESCRIPTION	# OF COATS	FOOT	NOTES
7TH AVE	7004+28	LT	WHITE STOP BAR	1	36	PRE-STAGE 3 TO 3-2
7TH AVE	7007+22	LT	WHITE STOP BAR	1	15	PRE-STAGE 3 TO 3-2
7TH AVE	7007+23	RT	WHITE STOP BAR	1	24	PRE-STAGE 3 TO 3-2
7TH AVE	7007+25	RT	WHITE STOP BAR	1	18	PRE-STAGE 3 TO 3-2
7TH AVE	7008+46	LT	WHITE STOP BAR	1	24	PRE-STAGE 3 TO 3-2
7TH AVE	7008+46	LT	WHITE STOP BAR	1	30	PRE-STAGE 3 TO 3-2
7TH AVE	7008+50	LT	WHITE STOP BAR	1	18	PRE-STAGE 3 TO 3-2
7TH AVE	7011+38	RT	WHITE STOP BAR	1	15	PRE-STAGE 3 TO 1-0
7TH AVE	7011+54	RT	WHITE STOP BAR	1	23	PRE-STAGE 3 TO 1-0
19TH ST	1908+90	LT	WHITE STOP BAR	1	26	PRE-STAGE 3 TO 3-2
19TH ST	1911+37	RT	WHITE STOP BAR	1	18	PRE-STAGE 3 TO 3-2
19TH ST	1911+37	RT	WHITE STOP BAR	1	37	PRE-STAGE 3 TO 3-2
19TH ST	1913+23	LT	WHITE STOP BAR	1	38	PRE-STAGE 3 TO 3-4
RAMP N-7	76+15	RT	WHITE STOP BAR	2	42	PRE-STAGE 3 TO 1-1
RAMP N-7	76+07	LT	WHITE STOP BAR	2	36	PRE-STAGE 3 TO 1-1
7TH AVE	7012+44	LT	WHITE STOP BAR	1	22	STAGE 1-0
7TH AVE	7012+58	LT	WHITE STOP BAR	1	11	STAGE 1-0
7TH AVE	7011+30	RT	WHITE STOP BAR	1	11	STAGE 1-1 TO 1-2
7TH AVE	7011+36	RT	WHITE STOP BAR	1	22	STAGE 1-1 TO 1-2
7TH AVE	7013+07	LT	WHITE STOP BAR	1	47	STAGE 1-1 TO 1-2
RAMP N-7	76+00	LT	WHITE STOP BAR	2	30	STAGE 1-2
RAMP N-7	76+10	RT	WHITE STOP BAR	2	28	STAGE 1-2
7TH AVE	7011+29	RT	WHITE STOP BAR	1	10	STAGE 1-3 TO 1-4
7TH AVE	7011+60	RT	WHITE STOP BAR	1	22	STAGE 1-3 TO 1-4
7TH AVE	7012+61	LT	WHITE STOP BAR	1	34	STAGE 1-3 TO 1-4
7TH AVE	7017+35	RT	WHITE STOP BAR	1	20	STAGE 1-3 TO 1-4
RAMP N-7	75+80	RT	WHITE STOP BAR	2	42	STAGE 1-3 TO 3-0
RAMP N-7	75+92	LT	WHITE STOP BAR	2	36	STAGE 1-3 TO 1-4
RAMP S-7	77+20	RT	WHITE STOP BAR	2	40	STAGE 1-3
RAMP S-7	77+27	RT	WHITE STOP BAR	2	24	STAGE 1-3
7TH AVE	7011+26	RT	WHITE STOP BAR	1	15	STAGE 1-5
7TH AVE	7012+62	LT	WHITE STOP BAR	1	11	STAGE 1-5
7TH AVE	7017+24	RT	WHITE STOP BAR	1	9	STAGE 1-5
RAMP S-7	77+00	LT	WHITE STOP BAR	2	40	STAGE 1-5
19TH ST	1897+30	RT	WHITE STOP BAR	1	11	STAGE 2
RIVER RD	3014+40	RT	WHITE STOP BAR	1	30	STAGE 2
RIVER RD	3014+93	RT	WHITE STOP BAR	1	12	STAGE 2
7TH AVE	7012+48	RT	WHITE STOP BAR	1	36	WINTER TO 3-2
7TH AVE	7013+68	LT	WHITE STOP BAR	1	24	WINTER TO 3-2
PR RAMP 7TH-A	642+49	LT	WHITE STOP BAR	2	104	WINTER TO 3-2
			TOTAL		1,091	

70400100

TEMPORARY CONCRETE BARRIER

ALIGNMENT	STA FROM	OFFSET	LT/RT	STA TO	OFFSET	LT/RT	FOOT	STAGE
19TH ST	1913+49.09	54.63	RT	1915+04.42	63.26	RT	152.04	PRESTAGE
Temp Ramp N-3	1067+42.51	15.67	LT	1070+76.76	14.06	LT	329.42	2
EX Ramp 3-N	369+12.80	35.14	RT	369+88.32	54.29	RT	101.36	2
I-74 (IA)	6748+20.31	11.05	RT	6745+67.06	4.48	RT	253.38	WINTER
I-74	25+35.00	4.48	LT	30+41.71	4.94	RT	506.84	WINTER
I-74	31+83.37	33.50	LT	48+93.94	32.00	LT	1710.90	3
				TOTAL (ROUND TO NEAREST 12.5')			3,050.0	

70400200

RELOCATE TEMPORARY CONCRETE BARRIER

STAGE	ALIGNMENT	STA FROM	OFFSET	LT/RT	STA TO	OFFSET	LT/RT	FOOT
Winter Stage	Temp Ramp N-3	1067+49.26	16.62	LT	1070+44.50	15.24	LT	291.41
3	I-74 (IA)	6747+16.75	37.79	RT	6745+67.06	35.33	RT	149.86
3	I-74	25+35.00	35.33	LT	31+83.37	33.50	LT	648.37
					TOTAL (ROUND TO NEAREST 12.5')			1,087.5

LAYOUT	CBP	11/26/2014
DRAWN	CBP	11/26/2014
REVIEWED	AAP	11/26/2014

SCHO-21

FILE NAME = 02CONAB-HPS-sht-schedule001.dgn	USER NAME = heato81447	DESIGNED - CBP	REVISED - 05/16/17	STATE OF ILLINOIS DEPARTMENT OF TRANSPORTATION
		DRAWN - CBP	REVISED -	
	PLOT SCALE =	CHECKED - AAP	REVISED -	
	PLOT DATE = 5/30/2017	DATE - 1/20/2017	REVISED -	

SCHEDULE OF QUANTITIES

SCALE: | SHEET NO. OF SHEETS | STA. TO STA.

F.A.I RTE.	SECTION	COUNTY	TOTAL SHEETS	SHEET NO.
74	(B1-1)R & B1-1)HVBR	ROCK ISLAND	1504	78

CONTRACT NO. 64C08

ILLINOIS FED. AID PROJECT

78200005

GUARDRAIL REFLECTORS, TYPE A

ALIGNMENT	STA	OFFSET	LT/RT	STA	OFFSET	LT/RT	EACH
PR RD-H	211+73.18	24.00'	RT	212+65.90	16.00'	RT	4
PR RD-H	215+74.64	23.00'	LT	217+30.16	22.00'	LT	4
PR 6TH-D	421+82.02	17.23'	RT	422+75.00	14.13'	RT	4
PR 6TH-D	423+72.38	23.00'	LT	425+28.03	22.00'	LT	4
						TOTAL	16

* Per Standard 782006, spaced per 80' for first 400'. Minimum number of markers per guardrail installation is 4 regardless of length. Assume spacing per Standard 635001 elsewhere.

78200010

BARRIER WALL REFLECTORS, TYPE B

ALIGNMENT	STA	OFFSET	LT/RT	STA	OFFSET	LT/RT	EACH	COLOR
PR I-74	6747+16.75	74'	LT	29+30.22	84'	RT	4	CRYSTAL
PR I-74	6747+16.75	70'	RT	28+85.69	76'	LT	2	CRYSTAL
PR I-74	6747+16.75	2'	LT	49+03.54	2'	RT	7	AMBER
PR I-74	6747+16.75	5'	RT	49+03.54	2'	LT	7	BI-DIRECTIONAL
PR I-74	33+18.40	76'	RT	49+22.50	62'	RT	9	CRYSTAL
PR I-74	32+99.87	62'	LT	48+85.26	62'	LT	4	CRYSTAL
PR 6TH-D	422+75.00	14'	RT	434+77.71	8'	RT	14	CRYSTAL
PR 6TH-D	425+28.03	22'	LT	430+64.41	22'	LT	7	AMBER
PR RD-G	128+59.07	8'	RT	135+58.13	32'	RT	7	CRYSTAL
PR RD-H	212+65.90	16'	RT	217+57.22	11'	RT	6	CRYSTAL
RAMP 6TH-C	322+65.00	8'	RT	330+89.18	8'	RT	9	CRYSTAL
RAMP 6TH-C	330+89.18	8'	RT	334+61.48	8'	RT	7	CRYSTAL
RAMP 6TH-C	334+61.48	8'	RT	336+49.59	8'	RT	2	CRYSTAL
RAMP 6TH-C	336+49.59	8'	RT	337+58.59	8'	RT	3	CRYSTAL
RAMP 6TH-C	326+49.91	24'	LT	330+89.18	23'	LT	6	AMBER
RAMP 6TH-C	330+89.18	23'	LT	334+61.48	30'	LT	7	AMBER
RAMP 6TH-C	334+61.48	30'	LT	336+25.00	41'	LT	2	AMBER
						TOTAL	103	

COLOR SUBTOTALS:

AMBER	29
CRYSTAL	67
BI-DIRECTIONAL	7

78300200

RAISED REFLECTIVE PAVEMENT MARKER REMOVAL

ALIGNMENT	STA FROM	STA TO	EACH
EX 4TH AVE	402+25.00	410+00.00	10
PR 6TH AVE	6000+29.00	6009+20.00	12
		TOTAL	22

X0301852

DEWATERING STRUCTURE NO. 1

ALIGNMENT	STA	OFFSET	LT/RT	STRUCTURE		EACH
RAMP RD-H	218+90.55	27.8	RT	A45		1
					TOTAL	1

X0301853

DEWATERING STRUCTURE NO. 2

ALIGNMENT	STA	OFFSET	LT/RT	STRUCTURE		EACH
RAMP RD-G	127+65.40	147.02	RT	C16		1
					TOTAL	1

X0322936

REMOVE EXISTING FLARED END SECTION

ALIGNMENT	STA	OFFSET	LT/RT				EACH
RIVER DR	3013+98.56	184.50	RT				1
						TOTAL	1

X0326382

CONCRETE BARRIER BASE (SPECIAL)

ALIGNMENT	STA	OFFSET	LT/RT	STA	OFFSET	LT/RT	FOOT
PR I-74	6746+86.75	1.9'	RT	27+23.63	0.0'	C	309
PR 6TH-C	331+30.00	28.7'	LT	336+25.00	41.9'	LT	475
PR 6TH-C	332+60.00	8.8'	RT	337+58.59	8.8'	RT	500
(OFFSETS MEASURED TO CENTER OF BARRIER BASE)						TOTAL	1,284

X0327070

REMOVE EXISTING FLAGPOLE

ALIGNMENT	STA	OFFSET	LT/RT				EACH
EX RIVER DRIVE	3011+81	120'	RT				1
EX RIVER DRIVE	3011+86	135'	RT				1
EX RIVER DRIVE	3011+91	149'	RT				1
						TOTAL	3

X0327727

PLANTER REMOVAL

ALIGNMENT	STATION	OFFSET	LT/RT				LSUM
5TH AVE	5000+92	19'	LT				1
						TOTAL	1

60264415

INLETS TO BE RECONSTRUCTED WITH NEW STANDARD 542546 FRAME AND GRATE

ALIGNMENT	STATION	OFFSET	LT/RT				EACH
7TH AVE	7004+47.98	3.90	RT				1
						TOTAL	1

LAYOUT	CBP	11/26/2014
DRAWN	CBP	11/26/2014
REVIEWED	AAP	11/26/2014

FILE NAME = D2CONAB-HPS-sht-schedule001.dgn
USER NAME = u11101457
PLOT SCALE =
PLOT DATE = 4/26/2017

DESIGNED - CBP
DRAWN - CBP
CHECKED - AAP
DATE - 1/20/2017

REVISED 05/16/17
REVISED -
REVISED -
REVISED -

STATE OF ILLINOIS
DEPARTMENT OF TRANSPORTATION

SCHEDULE OF QUANTITIES

SCALE: SHEET NO. OF SHEETS STA. TO STA.

SCHO-25

F.A.I RTE.	SECTION	COUNTY	TOTAL SHEETS	SHEET NO.
74	(B1-1)R & B1-1)HVBR	ROCK ISLAND	1504	82

CONTRACT NO. 64C08
ILLINOIS FED. AID PROJECT

X2503110
MOWING (SPECIAL)

ALIGNMENT	STA	OFFSET	LT/RT	STA TO	OFFSET	LT/RT	ACRE
EX I-74 SB BL	252+84	57'	RT	254+94	69'	RT	0.25
EX I-74 SB BL/CL	258+92	232'	RT	260+50	87'	RT	0.25
EX I-74 NB BL/CL	259+34	54'	LT	261+00	131'	LT	0.25
EX I-74 CL	261+41	80'	RT	266+05	641'	LT	5.25
EX I-74 CL	269+70	61'	LT	272+84	126'	LT	0.25
EX I-74 CL	273+40	89'	RT	276+42	135'	RT	0.25
EX I-74 CL	273+38	149'	LT	275+91	123'	LT	0.25
EX I-74 CL	273+43	546'	RT	278+16	779'	RT	0.25
						TOTAL	7.00

X4400110
TEMPORARY PAVEMENT REMOVAL

ALIGNMENT	STA	OFFSET	LT/RT	STA	OFFSET	LT/RT	SQ YD
7TH AVE	7009+23	20	RT	7011+75	12	RT	212
7TH AVE	7009+90	61	RT	7010+75	48	RT	119
7TH AVE	7010+38	64	RT	7010+75	146	RT	160
7TH AVE	7010+75	60	RT	7011+43	51	RT	58
7TH AVE	7011+28	51	RT	7011+75	12	RT	114
7TH AVE	7011+33	54	LT	7011+82	46	LT	136
7TH AVE	7011+60	3	RT	7011+75	55	LT	94
7TH AVE	7011+60	54	LT	7011+89	79	LT	85
7TH AVE	7011+75	10	LT	7011+86	16	LT	6
7TH AVE	7011+85	2	RT	7012+20	10	RT	55
7TH AVE	7011+60	18	LT	7013+02	30	LT	190
7TH AVE	7012+18	16	LT	7014+09	13	LT	220
7TH AVE	7012+25	53	RT	7013+00	50	RT	373
7TH AVE	7012+48	45	LT	7013+02	44	LT	227
7TH AVE	7012+78	79	RT	7012+96	109	RT	64
7TH AVE	7012+99	19	RT	7017+01	6	RT	304
7TH AVE	7013+21	45	LT	7013+56	77	LT	53
7TH AVE	7013+62	42	LT	7013+88	42	LT	53
7TH AVE	7017+34	5	RT	7022+58	1	LT	946
EN-RAMP 7-N	75+76	6	LT	76+15	8	RT	77
EX RAMP N-3	369+13	36	RT	370+67	29	RT	382
EX-RAMP N-7	75+83	19	LT	76+17	71	RT	133
PR I-74	6746+87	0	RT	29+07	0	RT	373
TEMP EX RAMP N-3	1067+10	2	LT	1071+34	2	RT	567
TEMP EX RAMP N-3	1067+60	18	LT	1070+50	18	LT	64
						TOTAL	5,065

X4402805
ISLAND REMOVAL

ALIGNMENT	STA	OFFSET	LT/RT	STA	OFFSET	LT/RT	SQ FT
PR 7TH AVE	7007+33	58'	LT	7007+55	74'	LT	214
PR 7TH AVE	7008+27	61'	LT	7008+53	61'	LT	387
PR 7TH AVE	7007+30	55'	RT	7007+58	55'	RT	485
PR 7TH AVE	7010+44	61'	RT	7011+43	57'	RT	4,125
PR 7TH AVE	7011+33	22'	RT	7012+21	10'	RT	859
PR 7TH AVE	7011+33	50'	LT	7011+80	50'	LT	1,245
PR 7TH AVE	7012+26	53'	RT	7012+99	48'	RT	2,955
PR 7TH AVE	7012+49	45'	LT	7013+31	45'	LT	2,148
						TOTAL	12,418

X5509900
ABANDON AND FILL EXISTING STORM SEWER

ALIGNMENT	STA	OFFSET	LT/RT	STA	OFFSET	LT/RT	LENGTH
RIVER DR	3013+63.94	52.05	RT	3013+78.44	3.03	LT	57
PR 19TH ST	1922+50.63	43.63	RT	1922+84.81	44.65	RT	35
PR 19TH ST	1922+84.81	44.65	RT	1923+96.35	33.58	RT	113
						TOTAL	205

X6060714
CONCRETE MEDIAN (SPECIAL)

ALIGNMENT	STA FROM	STA TO	SQ FT
6TH AVE	6005+96.65	6006+23.54	585
7TH AVE	7008+28.30	7008+50.82	369
7TH AVE	7013+61.60	7013+88.44	476
		TOTAL	1,430

X6061100
CONCRETE MEDIAN, TYPE SB (SPECIAL)

ALIGNMENT	STA FROM	STA TO	SQ FT
19TH ST	1913+20.25	1915+96.34	1,648
		TOTAL	1,648

X6061902
CONCRETE MEDIAN, TYPE SM (SPECIAL)

ALIGNMENT	STA FROM	STA TO	SQ FT
RIVER DR	3019+89.53	3020+70.55	826
7TH AVE	7004+25.45	7007+22.71	2,837
7TH AVE	7009+39.14	7012+51.21	2,703
19TH ST	1910+54.88	1911+36.59	482
21ST ST N	12+72.48	12+84.01	28
		TOTAL	6,876

X6062700
CONCRETE GUTTER, TYPE A (SPECIAL)

ALIGNMENT	STA FROM	OFFSET	LT/RT	STA TO	OFFSET	LT/RT	FOOT
RD-G	128+88.32	23.50	LT	136+25.64	32.15	LT	737.5
RD-H	210+67.25	24.06	LT	215+49.70	23.50	LT	482.5
						TOTAL	1,220.0

X6370279
CONCRETE BARRIER, SINGLE FACE, 42 INCH HEIGHT (SPECIAL)

ALIGNMENT	STA FROM	OFFSET	LT/RT	STA TO	OFFSET	LT/RT	FOOT
PR 6TH-C	331+30.00	28.7'	LT	336+25.00	41.9'	LT	475
PR 6TH-C	332+60.00	8.8'	RT	337+58.59	8.8'	RT	500
(OFFSETS MEASURED TO CENTER OF BARRIER)							
						TOTAL	975

X6370700
CONCRETE BARRIER TRANSITION (SPECIAL)

ALIGNMENT	STA	OFFSET	LT/RT	STA	OFFSET	LT/RT	FOOT
PR I-74	6746+86.75	1.9'	RT	27+23.63	0.0'	C	309
PR I-74	27+23.63	0.0'	C	28+07.25	0.0'	C	84
PR I-74	28+92.62	0.0'	C	29+06.79	0.0'	C	15
(OFFSETS MEASURED TO CENTER OF BARRIER)							
						TOTAL	408

X6640200
TEMPORARY CHAIN LINK FENCE

ALIGNMENT	STA FROM	OFFSET	LT/RT	STA TO	OFFSET	LT/RT	FOOT
4TH AVE	405+14	17.46'	RT	404+70	168.06'	RT	160
						TOTAL	160

X6640210
TEMPORARY CHAIN LINK FENCE (PORTABLE)

ALIGNMENT	STA FROM	OFFSET	LT/RT	STA TO	OFFSET	LT/RT	FOOT
5TH AVE	5001+80	138.50'	LT	5001+80	47.80'	LT	90
						TOTAL	90

X7040125
PINNING TEMPORARY CONCRETE BARRIER

ALIGNMENT	STA FROM	OFFSET	LT/RT	STA TO	OFFSET	LT/RT	FOOT	EACH	STAGE
Temp Ramp N-3	1067+56.83	15.42	LT	1070+65.15	16.12	LT	304.08	72	2
EX Ramp 3-N	369+22.77	37.88	RT	369+79.02	53.90	RT	76.02	18	2
Temp Ramp N-3	1067+61.91	16.80	LT	1070+31.83	16.67	LT	266.07	63	WINTER
						TOTAL:		153	

*Three anchor pins shall be installed in the traffic side holes of the required barrier.

*The (6) pins used with the anchored barrier unit at each end of an installation are not quantified and are included in the price of the temporary concrete barrier.

X7830070
GROOVING FOR RECESSED PAVEMENT MARKING 5"

ALIGNMENT	STA FROM	STA TO	LT/RT	LINE TYPE	RAW LENGTH	FOOT
RIVER DR	3016+00.87	3020+70.55	C	SOLID YELLOW	957	957
RIVER DR	3021+65.24	3024+00.00	LT	SKIP DASH	235	59
EX 4TH AVE	402+25.00	410+00.00	LT	SOLID WHITE	775	775
EX 4TH AVE	402+25.00	412+20.00	RT	SKIP-DASH	995	249
CONNECTOR	643+66.42	646+91.56	LT	SOLID YELLOW	659	659
CONNECTOR	644+37.16	646+70.88	RT	SKIP-DASH	234	59
PR 6TH AVE	5996+33.00	5999+37.24	LT	SKIP-DASH	304	76
PR 6TH AVE	6000+44.39	6006+02.79	RT	SKIP-DASH	558	140
PR 6TH AVE	6007+39.13	6009+20.00	LT	SKIP-DASH	181	45
PR 7TH AVE	7000+37.04	7003+51.93	RT	SKIP-DASH	312	78
PR 7TH AVE	7000+41.79	7003+56.54	LT	SKIP-DASH	316	79
PR 7TH AVE	7001+01.33	7003+56.88	C	SOLID YELLOW	520	520
PR 7TH AVE	7004+25.11	7007+23.04	C	SOLID YELLOW	606	606
PR 7TH AVE	7004+27.64	7007+25.71	LT	SKIP-DASH	296	74
PR 7TH AVE	7004+29.47	7007+24.00	RT	SKIP-DASH	297	74
PR 7TH AVE	7006+59.22	7007+25.10	LT	SKIP-DASH	65	16
PR 7TH AVE	7008+45.21	7012+48.21	RT	SKIP-DASH	403	101
PR 7TH AVE	7008+45.86	7012+04.69	LT	SKIP-DASH	359	90
PR 7TH AVE	7008+49.58	7012+51.54	C	SOLID YELLOW	817	817
PR 7TH AVE	7013+46.66	7017+01.61	C	SOLID YELLOW	742	742
PR 7TH AVE	7013+68.47	7026+41.00	LT	SKIP-DASH	1,219	305
PR 7TH AVE	7013+70.87	7022+34.83	RT	SKIP-DASH	866	216
PR 7TH AVE	7017+34.07	7022+59.00	C	SOLID YELLOW	1,065	1,065
PR 19TH ST	1897+26.18	1899+31.11	RT	SKIP-DASH	205	51
PR 19TH ST	1897+26.93	1898+41.20	LT	SOLID WHITE	114	114
PR 19TH ST	1897+30.95	1899+31.00	RT	DOUBLE YELLOW	200	400
PR 19TH ST	1902+50.00	1908+18.03	LT	SKIP-DASH	569	142
PR 19TH ST	1906+67.00	1908+24.87	LT	SKIP-DASH	158	40
PR 19TH ST	1908+69.38	1911+36.92	LT	SOLID YELLOW	545	545
PR 19TH ST	1908+90.24	1911+60.40	LT	SKIP-DASH	270	67
PR 19TH ST	1908+89.60	1911+37.50	RT	SKIP-DASH	248	62
NOTE: SKIP-DASH: CALCULATED AS 30' SKIP - 10' DASH (0.25*RAW LENGTH)						
					TOTAL	9,223

X7830072
GROOVING FOR RECESSED PAVEMENT MARKING 6"

ALIGNMENT	STA FROM	STA TO	LT/RT	LINE TYPE	RAW LENGTH	FOOT
MAINLINE PAVEMENT MARKINGS NOT-ON-BRIDGE						
PR I-74	6747+16.75 (23+85.31)	26+65.70	61.67 RT	SOLID WHITE	280	280
PR I-74	6747+16.75 (23+85.31)	29+32.92	18.62 LT - 14.33 LT	SOLID YELLOW	548	548
PR I-74	6747+16.75 (23+85.31)	29+40.86	14.46 RT - 14.33 RT	SOLID YELLOW	555	555
RAMP PAVEMENT MARKINGS NOT-ON-BRIDGE						
PR 6TH-C	320+00.00	322+92.57	0.33 LT	SOLID WHITE	293	293
PR 6TH-C	330+83.00	337+44.93	15.67 LT - 41.30 LT	SOLID YELLOW	659	659
PR 6TH-C	330+83.00	337+62.89	0.33 LT	SOLID WHITE	680	680
PR 6TH-D	420+58.16	425+59.35	15.66 LT	SOLID YELLOW	500	500
PR 6TH-D	420+58.16	425+62.83	7.67 RT - 0.33 LT	SOLID WHITE	505	505
PR 6TH-D	434+45.96	439+79.53	0.33 LT	SOLID WHITE	534	534
PR RD-G	128+59.81	136+24.63	0.33 LT - 41.58 RT	SOLID WHITE	768	768
PR RD-G	128+59.81	136+34.28	15.67 LT - 33.51 LT	SOLID YELLOW	777	777
PR RD-H	217+58.15	210+54.00	25.96 LT - 15.67 LT	SOLID YELLOW	707	707
PR RD-H	217+58.15	210+89.63	45.17 RT - 2.06 RT	SOLID WHITE	676	676
NOTE: SKIP-DASH: CALCULATED AS 30' SKIP - 10' DASH (0.25*RAW LENGTH)						
					TOTAL	7,482

SCHO-27

FILE NAME = D2CONNB-HPS-sht-schedule001.dgn	USER NAME = heato81447	DESIGNED - CBP	REVISED - 05/16/17	STATE OF ILLINOIS DEPARTMENT OF TRANSPORTATION	SCHEDULE OF QUANTITIES		
		DRAWN - CBP	REVISED -				
	PLOT SCALE =	CHECKED - AAP	REVISED -		SCALE:	SHEET NO. OF SHEETS	STA. TO STA.
	PLOT DATE = 5/25/2017	DATE - 1/20/2017	REVISED -				

F.A.I RTE.	SECTION	COUNTY	TOTAL SHEETS	SHEET NO.
74	(81-1)R & 81-1)HVBR	ROCK ISLAND	1504	84
		CONTRACT NO. 64C08		
	ILLINOIS	FED. AID PROJECT		

LAYOUT	CBP	11/26/2014
DRAWN	CBP	11/26/2014
REVIEWED	AAP	11/26/2014

HANSON

X0839900
SANITARY SEWER REMOVAL 6"

ALIGNMENT	STA	STA	OFFSET	RT/LT			LENGTH
EX 5TH AVE	5006+35	5006+66	65	LT			30
EX 5TH AVE	5006+35	5006+65	197	LT			40
EX 5TH AVE	5006+35	5006+65	307	LT			35
						TOTAL	105

X5620122
WATER SERVICE REMOVAL

LOCATION							EACH
400 21ST Street							1
2101 5th Ave							1
						TOTAL	2

Z0007601
BUILDING REMOVAL NO. 1

LOCATION							LSUM
400 21ST Street							1
						TOTAL	1

Z0007602
BUILDING REMOVAL NO. 2

LOCATION							LSUM
2101 5TH AVE							1
						TOTAL	1

Z0026505
PROPERTY MARKERS

ALIGNMENT	STA	OFFSET	LT/RT				EACH
RAMP RD-H	214+28	54.2'	RT				1
6TH AVE	6001+25	25.6'	RT				1
6TH AVE	6001+73	25.7'	RT				1
6TH AVE	6002+10	25.7'	RT				1
6TH AVE	6002+45	25.8'	RT				1
6TH AVE	6002+55	34.2'	LT				1
7TH AVE	7016+41	48.3'	RT				1
CONTINGENCY QUANTITY AT ENGINEER'S DISCRETION							2
						TOTAL	9

Z0028415
GEOTECHNICAL REINFORCEMENT

ALIGNMENT	STA FR			STA TO		SQ FT	SQ YD
PR I-74	6746+83.75	24+18.31		28+92.85		36,177	4,020
PR I-74	6746+83.75	24+18.31		29+15.53		37,489	4,165
PR RD-G	128+92.81			136+34.28		40,965	4,552
PR RD-H	210+75.48			217+25.15		28,645	3,183
PR 6TH-C	331+16.00			337+58.59		29,536	3,282
PR 6TH-D	420+58.16			425+29.91		17,626	1,958
21ST ST N	10+00.00			13+37.40		16,745	1,861
6TH AVE	6000+29.00			6009+20.00		38,210	4,246
7TH AVE	7004+20.00			7017+03.00		132,241	14,693
CONNECTOR	643+85.21			646+94.29		28,622	3,180
19TH ST	1909+70.00			1911+64.12		17,792	1,977
19TH ST	1913+20.25			1920+29.63		43,942	4,882
EX 4TH AVE	402+25.00			410+00.00		PATCH	49
7TH AVE	7012+50.00			7016+60.00		PATCH	75
19TH ST	1922+38.00			1924+53.00		PATCH	117
						TOTAL	52,240

Z0056608
STORM SEWER (WATER MAIN REQUIREMENTS) 12 INCH

ALIGNMENT	STA FROM	OFFSET	LT/RT	STA TO	OFFSET	LT/RT	FOOT
ASSUMED VALUE FOR ANY CONFLICTS ENCOUNTERED							100
						TOTAL	100

Z0056612
STORM SEWER (WATER MAIN REQUIREMENTS) 18 INCH

ALIGNMENT	STA FROM	OFFSET	LT/RT	STA TO	OFFSET	LT/RT	FOOT
ASSUMED VALUE FOR ANY CONFLICTS ENCOUNTERED							50
						TOTAL	50

Z0056616
STORM SEWER (WATER MAIN REQUIREMENTS) 24 INCH

ALIGNMENT	STA FROM	OFFSET	LT/RT	STA TO	OFFSET	LT/RT	FOOT
ASSUMED VALUE FOR ANY CONFLICTS ENCOUNTERED							50
						TOTAL	50

Z0056624
STORM SEWER (WATER MAIN REQUIREMENTS) 42 INCH

ALIGNMENT	STA FROM	OFFSET	LT/RT	STA TO	OFFSET	LT/RT	FOOT
ASSUMED VALUE FOR ANY CONFLICTS ENCOUNTERED							50
						TOTAL	50

Z0062456
TEMPORARY PAVEMENT

ALIGNMENT	STA	OFFSET	LT/RT	STA	OFFSET	LT/RT	SQ YD	NOTES:
7TH AVE	7012+18	16	LT	7014+09	13	LT	220	Pre-stage 1
7TH AVE	7012+99	19	RT	7017+01	6	RT	304	Pre-stage 1
7TH AVE	7017+34	5	RT	7022+58	1	LT	946	Pre-stage 1
7TH AVE	7009+23	20	RT	7011+75	12	RT	212	Pre-stage 2
7TH AVE	7009+90	61	RT	7010+75	48	RT	119	Pre-stage 2
7TH AVE	7010+38	64	RT	7010+75	146	RT	160	Pre-stage 2
7TH AVE	7010+75	60	RT	7011+43	51	RT	58	Pre-stage 2
7TH AVE	7011+33	54	LT	7011+82	46	LT	136	Pre-stage 2
7TH AVE	7011+28	51	RT	7011+75	12	RT	114	Pre-stage 2
7TH AVE	7011+60	3	RT	7011+75	55	LT	94	Pre-stage 2
7TH AVE	7011+75	10	LT	7011+86	16	LT	6	Pre-stage 2
7TH AVE	7011+85	2	RT	7012+20	10	RT	55	Pre-stage 2
EX-RAMP N-7	75+83	19	LT	76+17	71	RT	133	Pre-stage 2
19TH ST	1913+05	72	RT	1913+63	61	RT	34	Pre-stage 2
19TH ST	1915+10	74	RT	1915+32	69	RT	12	Pre-stage 2
19TH ST	1915+10	65	RT	1925+35	9	RT	2,779	Pre-stage 2
19TH ST	1917+44	36	LT	1918+22	21	LT	65	Pre-stage 2
19TH ST	1926+00	9	RT	1928+28	8	LT	401	Pre-stage 2
PR I-74	6746+87	0	RT	29+07	0	RT	373	Stage 1
7TH AVE	7012+25	53	RT	7013+00	50	RT	373	Stage 1-0
7TH AVE	7012+48	45	LT	7013+02	44	LT	227	Stage 1-0
7TH AVE	7013+21	45	LT	7013+56	77	LT	53	Stage 1-1
7TH AVE	7013+62	42	LT	7013+88	42	LT	53	Stage 1-1
EN-RAMP 7-N	75+76	6	LT	76+15	8	RT	77	Stage 1-1
7TH AVE	7011+60	54	LT	7011+89	79	LT	85	Stage 1-2
7TH AVE	7011+60	18	LT	7013+02	30	LT	190	Stage 1-2
7TH AVE	7012+78	79	RT	7012+96	109	RT	64	Stage 1-3
TEMP EX RAMP N-3	1067+10	2	LT	1071+54	4	RT	567	Stage 2-0
EX RAMP N-3	369+13	36	RT	370+67	29	RT	382	Stage 2-0
TEMP EX RAMP N-3	1067+60	18	LT	1070+50	18	LT	64	Stage 2
						TOTAL	8,356	

#2000320
STORM SEWER REMOVAL, 31" X 20" ELLIPTICAL

ALIGNMENT	STA	OFFSET	LT/RT	STA	OFFSET	LT/RT	FOOT
RIVER DR	3013+77.82	119.44	RT	3013+63.94	52.05	RT	69
						TOTAL	69

SCHQ-29

FILE NAME =	USER NAME = heato01447	DESIGNED - CBP	REVISED - 05/16/17
D2CONAB-HPS-sht-schedule001.dgn		DRAWN - CBP	REVISED -
	PLOT SCALE =	CHECKED - AAP	REVISED -
	PLOT DATE = 5/25/2017	DATE - 1/20/2017	REVISED -

STATE OF ILLINOIS
DEPARTMENT OF TRANSPORTATION

SCHEDULE OF QUANTITIES

SCALE: SHEET NO. OF SHEETS STA. TO STA.

F.A.I RTE.	SECTION	COUNTY	TOTAL SHEETS	SHEET NO.
74	(81-1)R & 81-1)HVBR	ROCK ISLAND	1504	86

CONTRACT NO. 64C08

ILLINOIS FED. AID PROJECT

LAYOUT	CBP	11/26/2014
DRAWN	CBP	11/26/2014
REVIEWED	AAP	11/26/2014

HANSON

PROPOSED MAINLNE					
℄ PR I-74					
POINT	CURVE NAME	STATION	NORTHING	EASTING	TANGENT
POT		6796+70.83	570,237.28	2,458,024.74	
PC		6746+45.84	565,341.08	2,459,155.11	
STATION EQUATION: STA 6745+67.06(A) = STA 25+35.00 (IL)					
PI	ML100CL1	26+30.75	565,171.01	2,459,194.38	
PT		28+05.28	565,000.29	2,459,230.66	
CC			560,842.06	2,439,667.71	2,037.59'
PC		48+42.87	563,007.23	2,459,654.30	
PI	ML100CL2	51+84.67	562,672.89	2,459,725.37	
PT		55+23.55	562,331.14	2,459,719.40	
CC			562,383.49	2,456,719.86	630.00'
PC		61+53.55	561,701.23	2,459,708.41	
PI	ML100CL3	66+05.62	561,249.23	2,459,700.52	
PT		70+48.03	560,823.08	2,459,851.42	
CC			561,657.60	2,462,208.03	615.75'
PC		76+63.77	560,242.66	2,460,056.96	
PI	ML100CL4	79+46.18	559,976.45	2,460,151.23	
PT		82+25.77	559,695.35	2,460,178.30	
CC			559,474.90	2,457,888.89	438.21'
PC		86+63.98	559,259.15	2,460,220.30	
PI	ML100CL5	94+70.39	558,456.46	2,460,297.59	
PCC		102+54.51	557,749.76	2,460,686.01	
CC			559,634.11	2,464,114.46	
PCC		102+54.51	557,749.76	2,460,686.01	
PI	ML100CL6	115+11.95	556,647.80	2,461,291.67	
PT		127+59.37	555,703.40	2,462,121.89	
CC			563,269.21	2,470,728.28	1,334.92'
PC		140+94.29	554,700.80	2,463,003.26	
PI	ML100CL7	156+58.40	553,526.07	2,464,035.95	
PT		170+63.40	551,964.42	2,463,948.15	
CC			552,178.86	2,460,134.45	

SEPARATE CONTRACT (BY OTHERS FOR REFERENCE ONLY)

PROPOSED RAMPS					
POINT	CURVE NAME	STATION	NORTHING	EASTING	TANGENT
₪ PR RAMP RD-G					
POT		120+00.00	566,229.23	2,458,867.76	
PC		123+97.74	565,839.53	2,458,947.34	397.74'
PI	RRD-G-1	125+86.43	565,654.65	2,458,985.09	
PT		127+75.08	565,468.49	2,459,015.84	
CC			563,838.81	2,449,149.53	934.28'
POT		137+09.35	564,546.70	2,459,168.10	
₪ PR RAMP RD-H					
POT		210+00.00	564,718.25	2,459,496.40	
PC		216+71.36	565,354.44	2,459,281.94	671.36'
PI	3RH_IL-1	220+64.68	565,727.15	2,459,156.30	
PT		224+57.36	566,110.38	2,459,067.82	
CC			567,909.99	2,466,862.78	720.19'
POT		231+77.55	566,812.12	2,458,905.81	
₪ PR RAMP 6TH-C					
PC		320+00.00	565,123.41	2,459,140.61	
PI	R6TH-C-1	320+69.58	565,054.75	2,459,151.91	
PT		321+39.17	564,986.01	2,459,162.73	
CC			561,895.34	2,439,520.82	355.19'
PC		324+94.36	564,635.14	2,459,217.94	
PI	R6TH-C-2	326+61.78	564,469.75	2,459,243.96	
PT		328+28.43	564,302.33	2,459,242.12	
CC			564,324.26	2,457,242.24	260.75'
PC		330+89.18	564,041.60	2,459,239.27	
PI	R6TH-C-3	332+90.05	563,840.75	2,459,237.06	
PT		334+61.48	563,719.02	2,459,396.84	
CC			564,037.21	2,459,639.24	188.11'
PC		336+49.59	563,605.03	2,459,546.47	
PI	R6TH-C-4	337+29.15	563,556.81	2,459,609.76	
PT		338+04.63	563,482.52	2,459,638.24	
CC			563,382.30	2,459,376.79	

SEPARATE CONTRACT (BY OTHERS FOR REFERENCE ONLY)

PROPOSED RAMPS					
POINT	CURVE NAME	STATION	NORTHING	EASTING	TANGENT
₪ PR RAMP 6TH-D					
POT		420+00.00	563,503.63	2,459,677.85	
PC		421+00.39	563,602.38	2,459,659.74	100.39'
PI	6RD_IL-1	421+45.59	563,646.83	2,459,651.59	
PT		421+90.74	563,690.55	2,459,640.12	
CC			563,385.96	2,458,479.42	1,147.75'
PC		433+38.49	564,800.71	2,459,348.80	
PI	6RD_IL-2	434+74.45	564,932.22	2,459,314.29	
PT		436+10.40	565,064.62	2,459,283.36	
CC			567,338.92	2,469,021.31	746.33'
POT		443+56.73	565,791.39	2,459,113.63	
₪ CONNECTOR (PR RAMP 7TH-A)					
PC		620+00.00	560,814.28	2,459,920.31	
PI	7RA_IL-1	623+55.18	561,149.09	2,459,801.75	
PT		627+03.04	561,504.25	2,459,805.72	
CC			561,481.89	2,461,805.60	844.69'
PC		635+47.73	562,348.88	2,459,815.17	
PI	7RA_IL-2	638+46.62	562,647.76	2,459,818.51	
PT		641+43.67	562,941.76	2,459,764.60	
CC			562,383.49	2,456,719.86	563.21'
POT		647+06.88	563,495.73	2,459,663.03	
₪ PR RAMP 7TH-B					
POT		520+00.00	562,854.81	2,459,221.39	
PC		521+76.67	562,698.94	2,459,304.56	
PI	R7TH-B-1	526+44.28	562,286.38	2,459,524.67	
PT		531+01.20	561,822.15	2,459,580.79	
CC			561,522.12	2,457,098.86	241.12'
PC		533+42.32	561,582.78	2,459,609.73	
PI	R7TH-B-2	536+42.09	561,285.18	2,459,645.70	
PCC		539+40.58	560,997.07	2,459,728.50	
CC			562,032.83	2,463,332.62	
PCC		539+40.58	560,997.07	2,459,728.50	
PI	R7TH-B-3	540+43.21	560,898.44	2,459,756.85	
PT		541+45.73	560,802.38	2,459,792.98	
CC			561,705.48	2,462,193.54	

SEPARATE CONTRACT (BY OTHERS FOR REFERENCE ONLY)

POT STA 231+77.55 ₪ RAMP RD-H = STA 6761+35.26, 88.00' RT ℄ PR I-74 (IOWA STA)

₪ PR RAMP RD-H

NOTES:

1. PORTION OF MAINLINE ALIGNMENT SHOWN ON THIS PAGE IS UNDER THE IOWA DEPARTMENT OF TRANSPORTATION'S JURISDICTION AND SHOULD BE USED FOR REFERENCE ONLY. THE IOWA MAINLINE ALIGNMENT DESIGN INFORMATION IS TO BE CONSTRUCTED UNDER A SEPARATE CONTRACT.
2. ALIGNMENTS NOTED AS "FOR REFERENCE ONLY" ARE CONSTRUCTED BY OTHERS AND NOT DETAILED IN THIS CONTRACT.

6

6775+00 — 6770+00 — ℄ PR I-74 (IOWA STA) — 6765+00 — N 13° 0' 0.00" W

MATCH LINE STA 6760+00

PROPOSED LOCAL ROADS					
POINT	CURVE NAME	STATION	NORTHING	EASTING	TANGENT
℄ PR 21ST ST NORTH CUL-DE-SAC					
POT		10+00.00	563,636.85	2,459,737.33	
PC		10+22.90	563,659.68	2,459,739.20	22.90'
PI	21STN_1	10+55.32	563,691.99	2,459,741.83	
PT		10+85.95	563,720.56	2,459,726.53	
CC			563,668.62	2,459,629.56	186.16'
PC		12+72.11	563,884.66	2,459,638.62	
PI	21STN_2	13+02.18	563,911.17	2,459,624.43	
PT		13+19.31	563,925.31	2,459,650.97	
CC			563,898.83	2,459,665.07	118.11'
POT		14+37.41	563,980.82	2,459,755.21	
℄ PR 21ST ST NORTH CUL-DE-SAC					
POT		6+00.00	563,465.04	2,460,010.28	
PC		7+03.18	563,416.31	2,459,919.32	103.18'
PI	21STS_1	7+39.23	563,399.30	2,459,887.55	
PRC		7+60.87	563,430.12	2,459,868.88	
CC			563,449.81	2,459,901.38	
PRC		7+60.87	563,430.12	2,459,868.88	
PI	21STS_2	7+88.60	563,453.84	2,459,854.51	
PT		8+15.23	563,468.07	2,459,830.71	
CC			563,372.32	2,459,773.46	21.62'
POT		8+36.85	563,479.17	2,459,812.16	

PROPOSED LOCAL ROADS					
POINT	CURVE NAME	STATION	NORTHING	EASTING	TANGENT
℄ PR 19TH ST					
POT		1894+65.00	564,419.09	2,458,434.53	
POT		1901+08.89	563,850.87	2,458,737.39	643.89'
POT		1906+75.00	563,348.32	2,458,998.00	566.11'
PC		1910+93.48	562,979.53	2,459,195.79	418.48'
PI	19TH_1	1911+75.47	562,907.27	2,459,234.54	
PT		1912+57.37	562,838.44	2,459,279.07	
CC			563,924.79	2,460,958.31	185.03'
PC		1914+42.40	562,683.08	2,459,379.58	
PI	19TH_2	1915+57.37	562,586.54	2,459,442.03	
PT		1916+71.34	562,478.36	2,459,480.94	
CC			562,139.90	2,458,539.96	287.14'
PC		1919+58.49	562,208.16	2,459,578.13	
PI	19TH_3	1923+30.58	561,858.03	2,459,704.06	
PT		1926+99.89	561,542.20	2,459,900.80	
CC			563,392.74	2,462,871.57	128.82'
PC		1928+28.70	561,432.86	2,459,968.91	
PI	19TH_4	1928+99.89	561,372.44	2,460,006.54	
PT		1929+71.06	561,313.14	2,460,045.92	
CC			564,029.47	2,464,137.38	81.67'
PC		1930+52.72	561,246.10	2,460,091.09	
PI	19TH_5	1931+20.58	561,188.57	2,460,128.62	
PT		1931+88.41	561,130.32	2,460,163.43	
CC			559,660.57	2,457,704.40	270.78'
PC		1934+59.20	560,897.89	2,460,302.35	
PI	19TH_6	1936+00.58	560,776.53	2,460,374.89	
PT		1937+36.43	560,635.35	2,460,382.64	
CC			560,603.94	2,459,810.55	139.55'
POT		1938+75.98	560,496.01	2,460,390.29	
POT		1950+00.18	559,373.47	2,460,451.21	1,124.20'

SEPARATE CONTRACT (BY OTHERS FOR REFERENCE ONLY)

PROPOSED LOCAL ROADS					
POINT	CURVE NAME	STATION	NORTHING	EASTING	TANGENT
₪ PR 6TH AVE					
POT		5995+50.00	562,976.74	2,458,689.32	
POT		6015+89.20	563,935.91	2,460,488.85	2,039.20'
₪ PR GRADING 6TH AND 7TH					
POT		6002+80.00	563,178.91	2,459,408.79	
POT		6006+00.00	563,329.43	2,459,691.18	320.00'
℄ PR 7TH AVE					
POT		6997+23.00	562,408.59	2,458,292.07	
PC		7000+53.72	562,564.75	2,458,583.60	330.72'
PI	7TH_1	7001+19.13	562,595.64	2,458,641.25	
PT		7001+84.44	562,621.23	2,458,701.44	
CC			561,280.94	2,459,271.28	360.31'
PC		7005+44.75	562,762.20	2,459,033.03	
PI	7TH_2	7006+82.08	562,815.93	2,459,159.41	
PT		7008+19.22	562,880.99	2,459,280.36	
CC			565,523.04	2,457,859.24	968.69'
PC		7017+87.91	563,339.86	2,460,133.47	
PI	7TH_3	7018+44.67	563,366.75	2,460,183.45	
PT		7019+01.41	563,392.49	2,460,234.03	
CC			558,936.45	2,462,502.00	303.30'
PC		7022+04.72	563,530.07	2,460,504.33	
PI	7TH_4	7023+99.83	563,618.57	2,460,678.22	
PT		7025+03.52	563,786.12	2,460,578.24	
CC			563,692.64	2,460,421.59	174.43'
POT		7026+77.96	563,935.91	2,460,488.85	
₪ PR GRADING RIVER DRIVE AND 4TH AVE					
POT		0+00.00	564,082.06	2,458,661.97	
POT		11+15.00	564,596.91	2,459,650.98	1,115.00'
₪ PR GRADING 4TH AVE AND RAMP 6TH-D					
POT		0+00.00	563,903.07	2,458,986.06	
POT		9+00.00	564,318.51	2,459,784.44	900.00'

N

SCALE: 0 50' 100'

ALT-03

LAYOUT	RLT	10/16/2014
DRAWN	DAW	10/16/2014
REVIEWED	AAP	9/17/2015

FILE NAME = D2CONAB-HPS-sht-ATB08IM.dgn

USER NAME = peth08954 | PLOT SCALE = 1" = 50' | PLOT DATE = 4/11/2017

DESIGNED - RLT | DRAWN - DAW | CHECKED - AAP | DATE - 1/20/2017

REVISED - 6 05/16/17 | REVISED - | REVISED - | REVISED -

STATE OF ILLINOIS
DEPARTMENT OF TRANSPORTATION

ALIGNMENT, TIES, AND BENCHMARKS
I-74 MAINLINE, RAMPS & LOCAL ROADS
PROPOSED ALIGNMENT CURVE DATA

SCALE: 1" = 50' | SHEET NO. OF SHEETS | STA. 6771+00 TO STA. 6760+00

F.A.I RTE.	SECTION	COUNTY	TOTAL SHEETS	SHEET NO.
74	(81-1)R & 81-1HVBR	ROCK ISLAND	1504	89

CONTRACT NO. 64C08

ILLINOIS FED. AID PROJECT

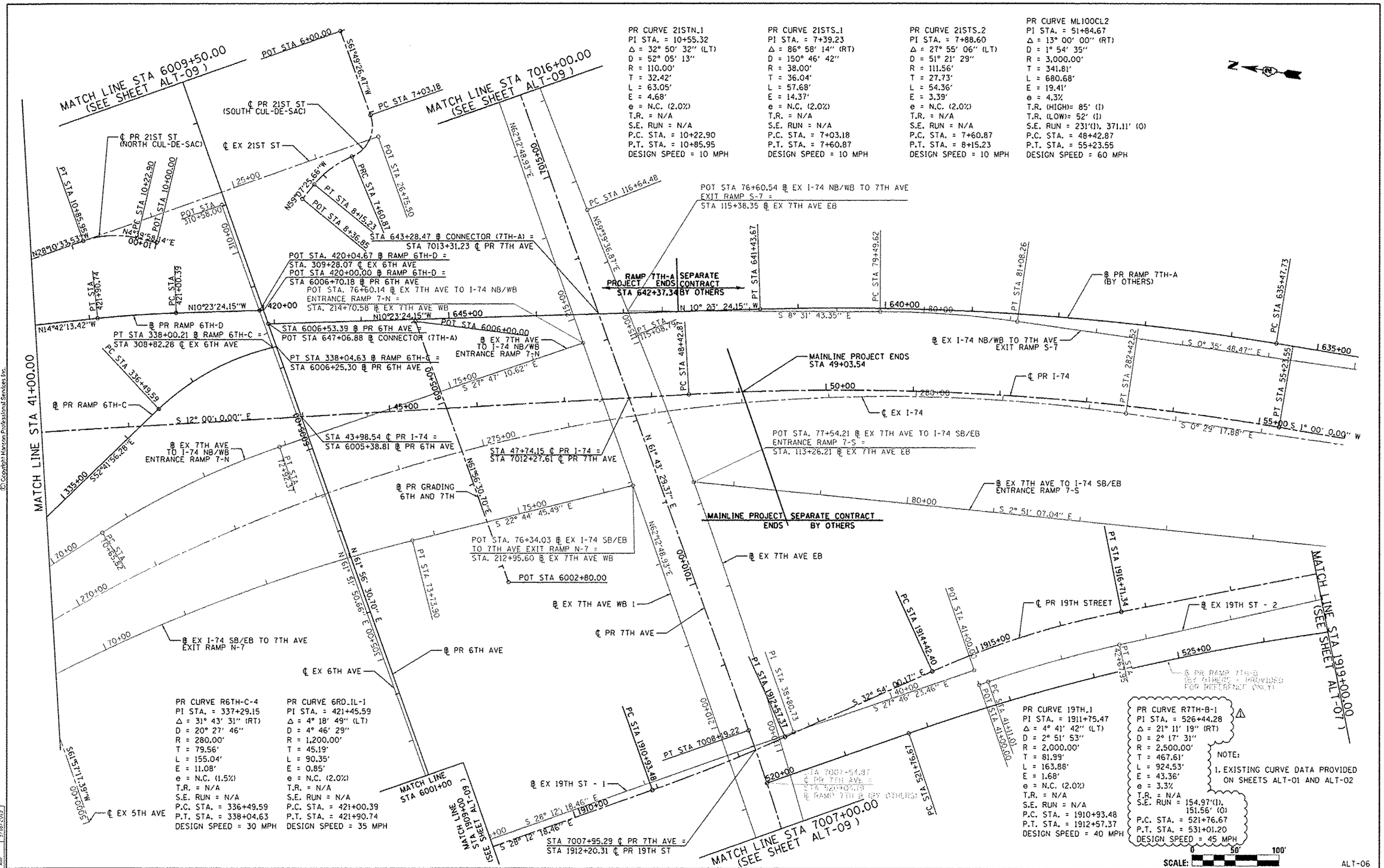

FILE NAME = D2CONAB-HPS-sht-ATB004M.dgn	USER NAME = paske00954	DESIGNED - RLT	REVISED - 05/16/17
		DRAWN - DAW	REVISED -
	PLOT SCALE = 1" = 50'	CHECKED - AAP	REVISED -
	PLOT DATE = 4/11/2017	DATE - 1/20/2017	REVISED -

LAYOUT	RLT	10/16/2014
DRAWN	DAW	10/16/2014
REVIEWED	AAP	9/18/2015

STATE OF ILLINOIS
DEPARTMENT OF TRANSPORTATION

ALIGNMENT, TIES, AND BENCHMARKS
I-74 MAINLINE, RAMPS & LOCAL ROADS

SCALE: 1" = 50' | SHEET NO. OF SHEETS | STA. 41+00 TO STA. 56+00

F.A.I RTE.	SECTION	COUNTY	TOTAL SHEETS	SHEET NO.
74	(81-1)R & 81-1HVBR	ROCK ISLAND	1504	92
		CONTRACT NO. 64C08		
		ILLINOIS FED. AID PROJECT		

RECONSTRUCTION OF CURVES BY OTHERS (PROVIDED FOR REFERENCE)

PR CURVE 19TH_3	PR CURVE 19TH_4	PR CURVE 19TH_5
PI STA. = 1923+30.58	PI STA. = 1928+99.89	PI STA. = 1931+20.58
Δ = 12° 08' 13" (LT)	Δ = 1° 39' 39" (LT)	Δ = 2° 42' 50" (RT)
D = 1° 38' 13"	D = 1° 10' 00"	D = 2° 00' 00"
R = 3,500.00'	R = 4,911.07'	R = 2,864.79'
T = 372.09'	T = 71.18'	T = 67.86'
L = 741.40'	L = 142.35'	L = 135.69'
E = 19.72'	E = 0.52'	E = 0.80'
e = N.C. (2.0%)	e = N.C. (2.0%)	e = N.C. (2.0%)
T.R. = N/A	T.R. = N/A	T.R. = N/A
S.E. RUN = N/A	S.E. RUN = N/A	S.E. RUN = N/A
P.C. STA. = 1919+58.49	P.C. STA. = 1928+28.70	P.C. STA. = 1930+52.72
P.T. STA. = 1926+99.89	P.T. STA. = 1929+71.06	P.T. STA. = 1931+88.41
DESIGN SPEED = 40 MPH	DESIGN SPEED = 45 MPH	DESIGN SPEED = 45 MPH

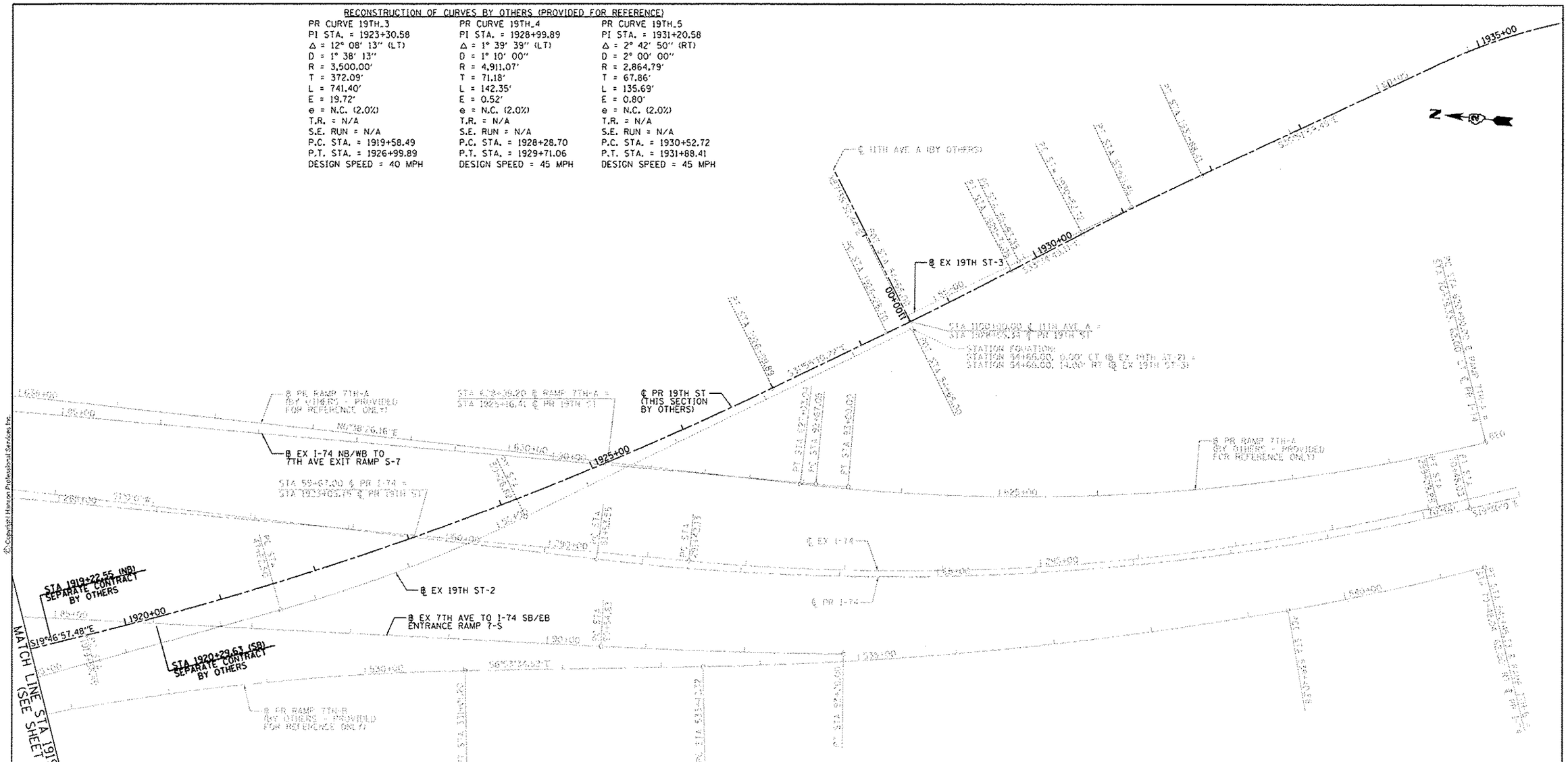

PR CURVE R7TH-B-2 (BY OTHERS PROVIDED FOR REFERENCE ONLY)	PR CURVE R7TH-B-3 (BY OTHERS PROVIDED FOR REFERENCE ONLY)
PI STA. = 536+42.09	PI STA. = 540+43.21
Δ = 9° 08' 27" (LT)	Δ = 4° 34' 58" (LT)
D = 1° 31' 40"	D = 2° 14' 02"
R = 3,750.00'	R = 2,564.81'
T = 299.77'	T = 102.63'
L = 598.26'	L = 205.15'
E = 11.96'	E = 2.05'
e = 3.3%	e = 4.9%
T.R. = N/A	T.R. = N/A
S.E. RUN = 151.56'	S.E. RUN = 57'
P.C. STA. = 533+42.32	P.C.C. STA. = 539+40.58
P.C.C. STA. = 539+40.58	P.T. STA. = 541+45.73
DESIGN SPEED = 55 MPH	DESIGN SPEED = 60 MPH

SCALE: 0 50' 100'

ALT-07

LAYOUT	RLT	10/16/2014
DRAWN	DAW	10/16/2014
REVIEWED	AAP	12/9/2015

FILE NAME = D2CONAB-HPS-sht-AT8005M.dgn	USER NAME = peuke08954	DESIGNED - RLT	REVISED - 05/16/17
		DRAWN - DAW	REVISED -
	PLOT SCALE = 1" = 50'	CHECKED - AAP	REVISED -
	PLOT DATE = 4/11/2017	DATE - 1/20/2017	REVISED -

STATE OF ILLINOIS
DEPARTMENT OF TRANSPORTATION

ALIGNMENT, TIES, AND BENCHMARKS
I-74 MAINLINE, RAMPS & LOCAL ROADS

SCALE: 1" = 50' | SHEET NO. OF SHEETS | STA. 1919+00 TO STA. 1935+00

F.A.I RTE.	SECTION	COUNTY	TOTAL SHEETS	SHEET NO.
74	(81-1)R & 81-1HVBR	ROCK ISLAND	1504	93
		CONTRACT NO. 64C08		
		ILLINOIS FED. AID PROJECT		

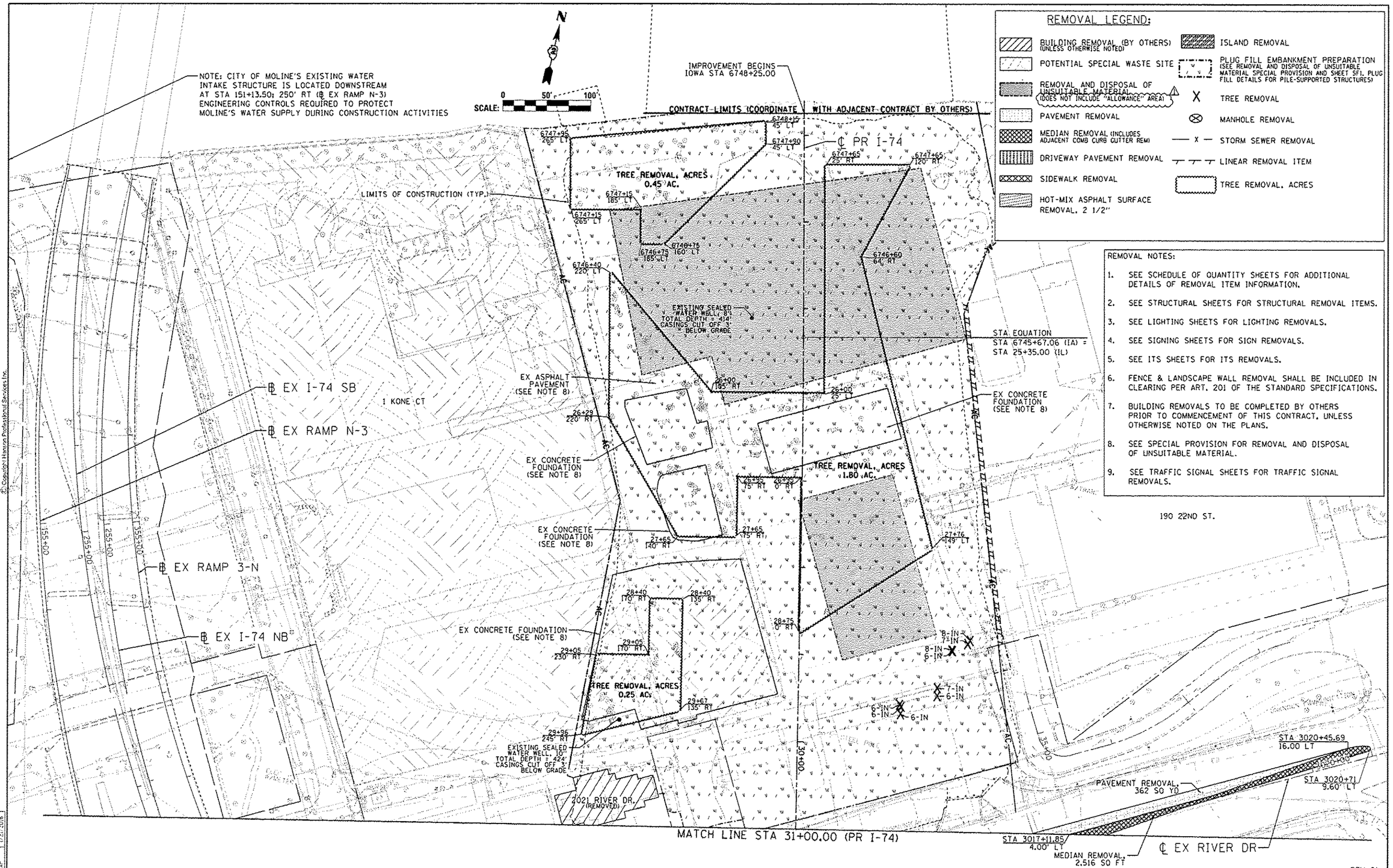

HANSON

CBP	CBP	6.9.2014
CBP	CBP	6.9.2014
AAP	AAP	1.21.2016

LAYOUT / DRAWN / REVIEWED

FILE NAME = D2CONAB-HPS-sht-rem04M.dgn	USER NAME = pete08954	DESIGNED - CBP	REVISED - ⚠ 05/16/17	STATE OF ILLINOIS DEPARTMENT OF TRANSPORTATION
		DRAWN - CBP	REVISED -	
	PLOT SCALE = 1" = 50'	CHECKED - AAP	REVISED -	
	PLOT DATE = 5/25/2017	DATE - 1/20/2017	REVISED -	

REMOVAL PLAN
I-74 MAINLINE, RAMPS & LOCAL ROADS
AREAS & TREES

SCALE: 1" = 50' | SHEET NO. OF SHEETS | STA. 6749+00 TO STA. 31+00

REM-01

F.A.I RTE.	SECTION	COUNTY	TOTAL SHEETS	SHEET NO.
74	(81-1)R & 81-1)VBR	ROCK ISLAND	1504	101

CONTRACT NO. 64C08

ILLINOIS FED. AID PROJECT

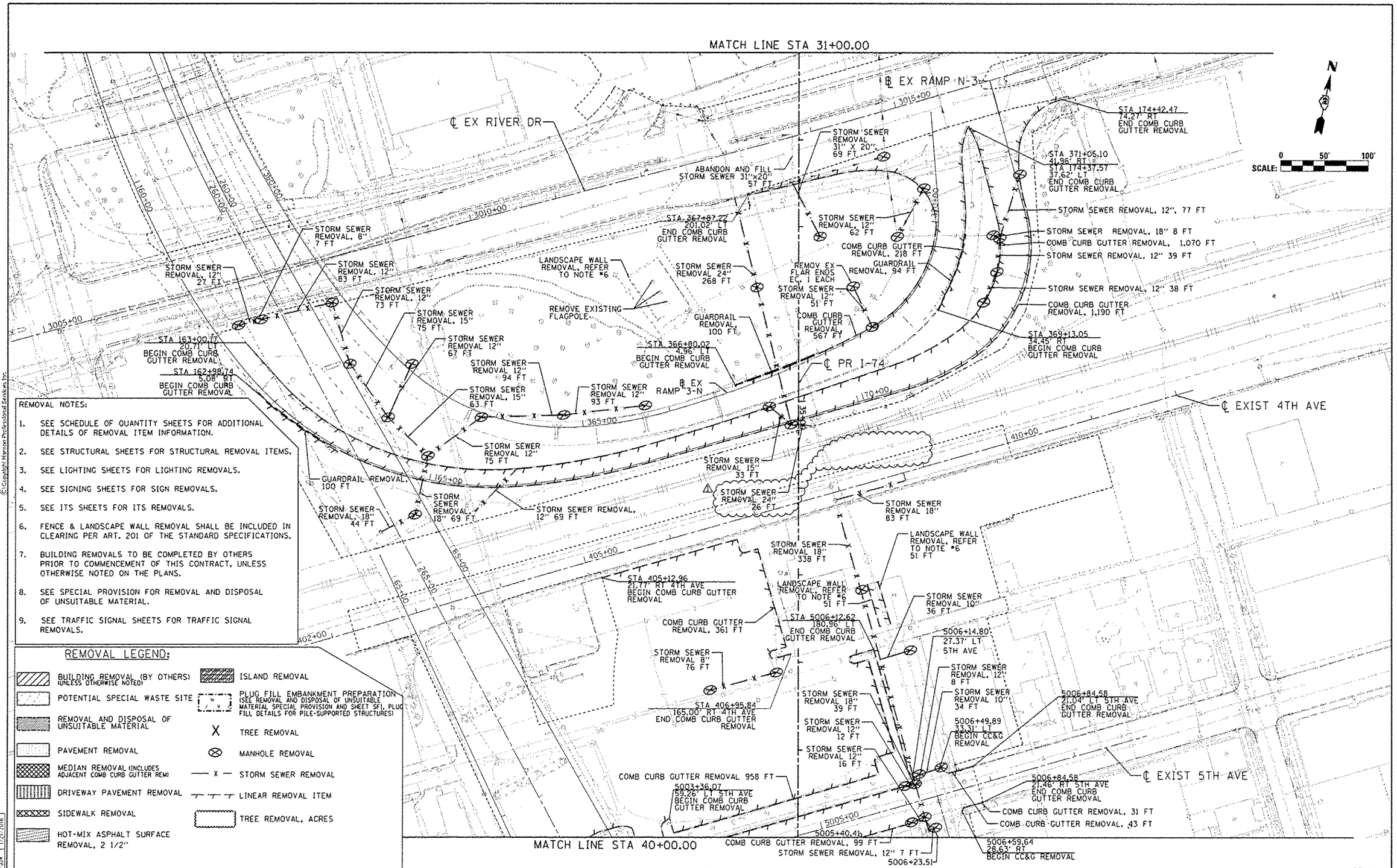

LAYOUT	CBP	6/13/2014
DRAWN	CBP	6/13/2014
REVISED	AAP, JJW	1/21/2016

FILE NAME = D2CONAB-HPS-sht-rem13M.dgn	USER NAME = mill0457	DESIGNED - CBP	REVISED - 05/16/17
		DRAWN - CBP	REVISED -
	PLOT SCALE = 1" = 50'	CHECKED - AAP/JJW	REVISED -
	PLOT DATE = 4/7/2017	DATE - 1/20/2017	REVISED -

STATE OF ILLINOIS
DEPARTMENT OF TRANSPORTATION

REMOVAL PLAN
I-74 MAINLINE, RAMPS & LOCAL ROADS
LINEAR ITEMS

SCALE: 1" = 50' | SHEET NO. OF SHEETS | STA. 31+00 TO STA. 40+00

REM-04

F.A.I RTE.	SECTION	COUNTY	TOTAL SHEETS	SHEET NO.
74	(81-1)R & 81-1)HVBR	ROCK ISLAND	1504	104
		CONTRACT NO. 64C08		
		ILLINOIS FED. AID PROJECT		

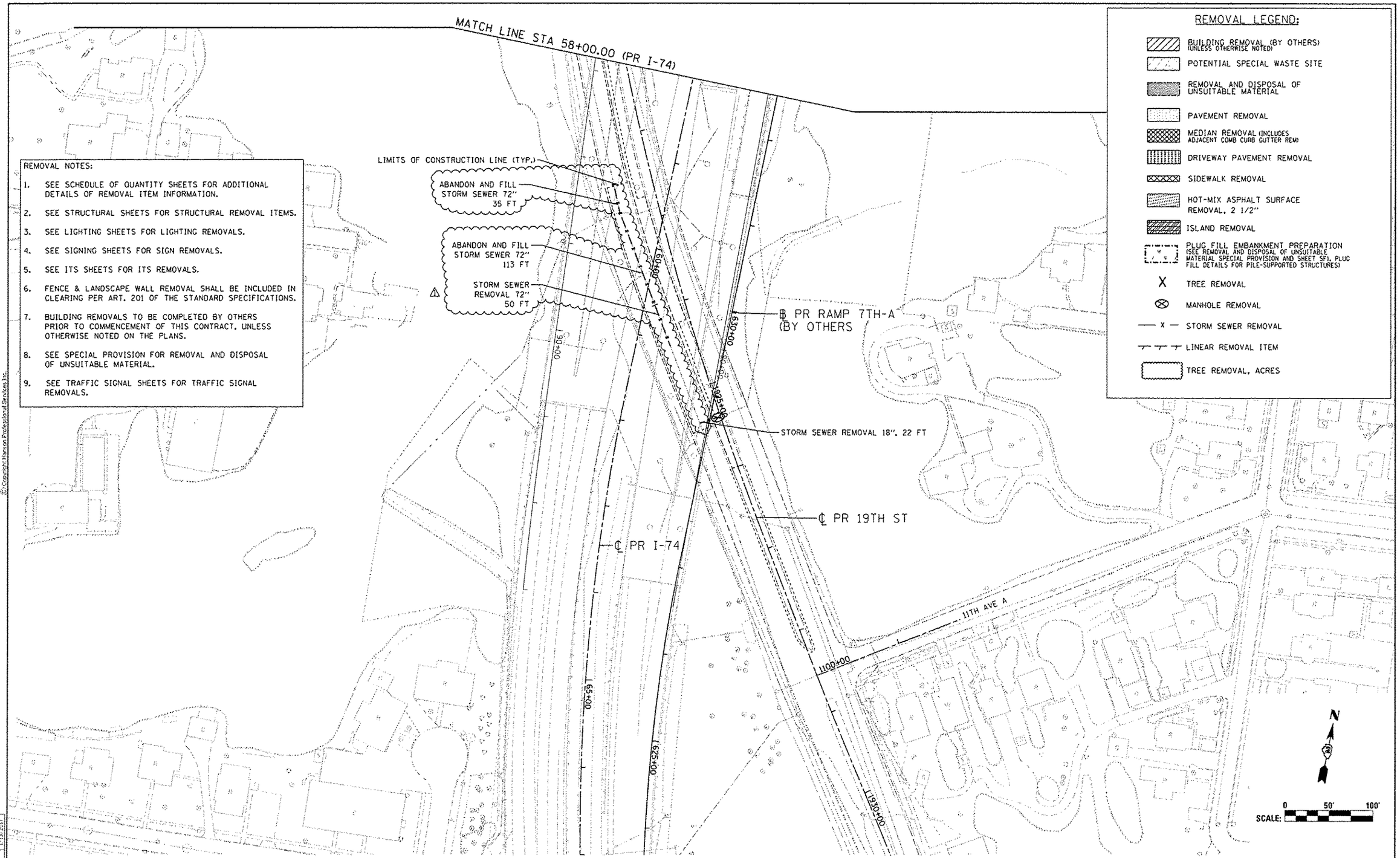

REMOVAL NOTES:

1. SEE SCHEDULE OF QUANTITY SHEETS FOR ADDITIONAL DETAILS OF REMOVAL ITEM INFORMATION.
2. SEE STRUCTURAL SHEETS FOR STRUCTURAL REMOVAL ITEMS.
3. SEE LIGHTING SHEETS FOR LIGHTING REMOVALS.
4. SEE SIGNING SHEETS FOR SIGN REMOVALS.
5. SEE ITS SHEETS FOR ITS REMOVALS.
6. FENCE & LANDSCAPE WALL REMOVAL SHALL BE INCLUDED IN CLEARING PER ART. 201 OF THE STANDARD SPECIFICATIONS.
7. BUILDING REMOVALS TO BE COMPLETED BY OTHERS PRIOR TO COMMENCEMENT OF THIS CONTRACT, UNLESS OTHERWISE NOTED ON THE PLANS.
8. SEE SPECIAL PROVISION FOR REMOVAL AND DISPOSAL OF UNSUITABLE MATERIAL.
9. SEE TRAFFIC SIGNAL SHEETS FOR TRAFFIC SIGNAL REMOVALS.

REMOVAL LEGEND:

- BUILDING REMOVAL (BY OTHERS) (UNLESS OTHERWISE NOTED)
- POTENTIAL SPECIAL WASTE SITE
- REMOVAL AND DISPOSAL OF UNSUITABLE MATERIAL
- PAVEMENT REMOVAL
- MEDIAN REMOVAL (INCLUDES ADJACENT COMB CURB GUTTER REM)
- DRIVEWAY PAVEMENT REMOVAL
- SIDEWALK REMOVAL
- HOT-MIX ASPHALT SURFACE REMOVAL, 2 1/2"
- ISLAND REMOVAL
- PLUG FILL EMBANKMENT PREPARATION (SEE REMOVAL AND DISPOSAL OF UNSUITABLE MATERIAL SPECIAL PROVISION AND SHEET SF1, PLUG FILL DETAILS FOR PILE-SUPPORTED STRUCTURES)
- X TREE REMOVAL
- MANHOLE REMOVAL
- — X — STORM SEWER REMOVAL
- LINEAR REMOVAL ITEM
- TREE REMOVAL, ACRES

HANSON

LAYOUT	CBP	1/22/2001
DRAWN	MGJ/JJW	3/10/2014
REVIEWED	AAP/JJW	1/13/2017

FILE NAME = 02CONAB-HPS-sht-rem816M.dgn

USER NAME = heato01447

PLOT SCALE = 1" = 50'

PLOT DATE = 5/25/2017

DESIGNED -	CBP	REVISED - ⚠	05/16/17
DRAWN -	MGJ/JJW	REVISED -	
CHECKED -	AAP/JJW	REVISED -	
DATE -	1/20/2017	REVISED -	

STATE OF ILLINOIS
DEPARTMENT OF TRANSPORTATION

REMOVAL PLAN
I-74 MAINLINE, RAMPS & LOCAL ROADS
LINEAR, EACH, AND UNIT ITEMS

SCALE: 1" = 50' | SHEET NO. OF SHEETS | STA. 58+00 TO STA. 67+00

REM-10

F.A.I. RTE.	SECTION	COUNTY	TOTAL SHEETS	SHEET NO.
74	(B1-1)R & B1-1)VBR	ROCK ISLAND	1504	110

CONTRACT NO. 64C08

ILLINOIS FED. AID PROJECT

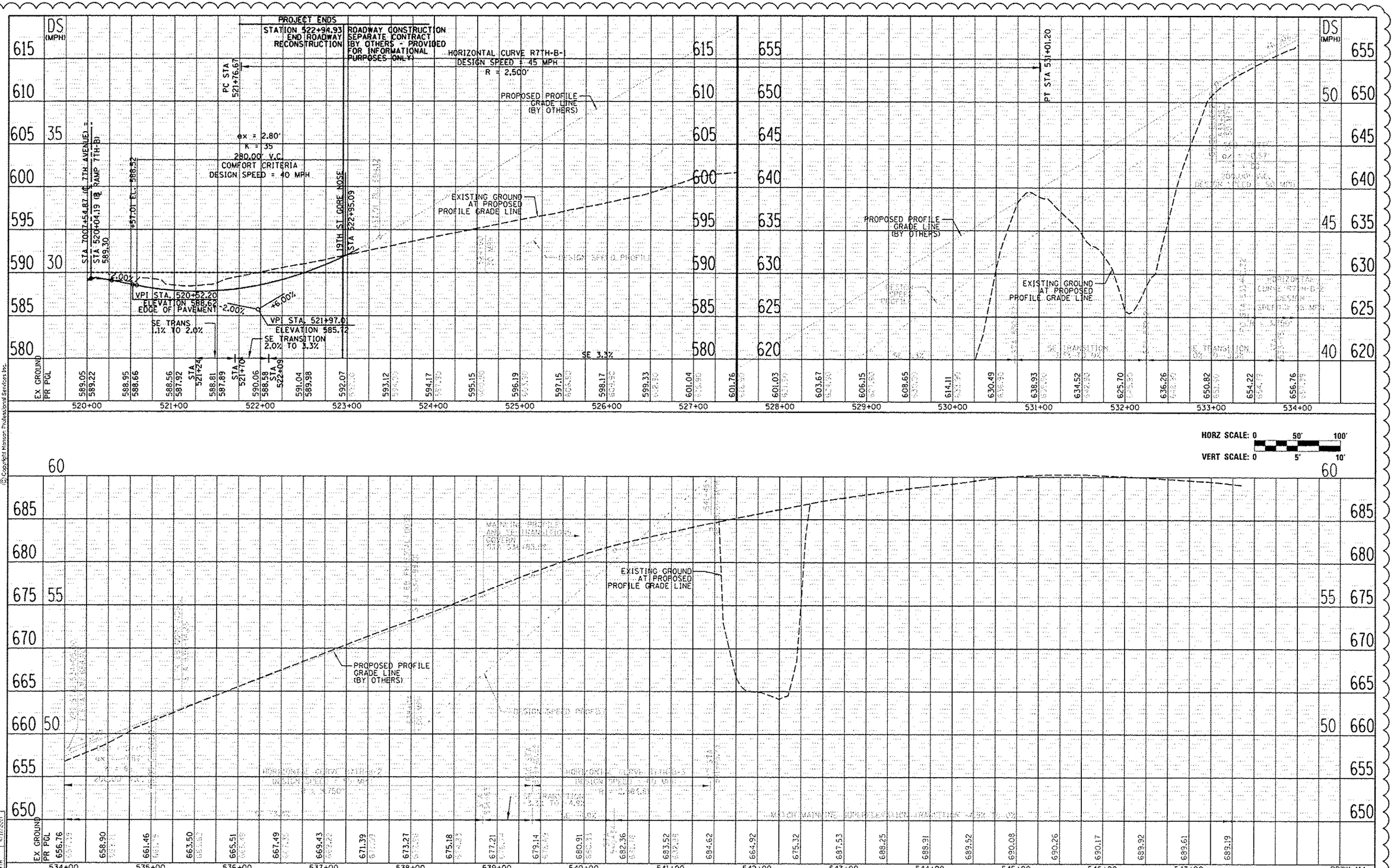

HANSON

LAYOUT	AAP	4/11/2017
DRAWN	AAP	4/11/2017
REVIEWED	MTH	4/11/2017

FILE NAME = D2CONAB-HPS-sht-profile16M.dgn

USER NAME = parke80954

PLOT SCALE = 1" = 50'

PLOT DATE = 4/11/2017

DESIGNED - AAP
DRAWN - AAP
CHECKED - MTH
DATE - 1/20/2017

REVISED - ⚠ 05/16/17
REVISED -
REVISED -
REVISED -

STATE OF ILLINOIS
DEPARTMENT OF TRANSPORTATION

ROADWAY SHEETS
PROFILE
RAMP 7TH-B

SCALE: 1" = 50' | SHEET NO. OF SHEETS | STA. TO STA.

F.A.I RTE.	SECTION	COUNTY	TOTAL SHEETS	SHEET NO.
74	(B1-1)R & B1-1HVBR	ROCK ISLAND	1504	122A

CONTRACT NO. 64C08

ILLINOIS FED. AID PROJECT

STAGING GENERAL NOTES

1. THE TRAFFIC CONTROL PLANS SHALL SERVE AS A GUIDE FOR SAFE DIVERSION OF TRAFFIC DURING EXECUTION OF THIS CONTRACT. THE CONTRACTOR MAY REQUEST TO IMPROVE OR MODIFY THE TRAFFIC CONTROL PLANS TO MEET CONSTRUCTION NEEDS BUT NOT AT THE EXPENSE OF PUBLIC SAFETY OR CONVENIENCE. ANY CHANGES TO THE TRAFFIC CONTROL PLANS SHALL BE SUBMITTED TO THE ENGINEER AND IDOT DISTRICT 2 TRAFFIC OPERATIONS FOR APPROVAL. THE ENGINEER SHALL BE INFORMED AT LEAST 10 DAYS IN ADVANCE OF ANY CHANGE REQUEST TO THE TRAFFIC CONTROL PLANS.

2. TRAFFIC CONDITIONS, ACCIDENTS, AND OTHER UNFORESEEN EMERGENCY CONDITIONS MAY REQUIRE THE ENGINEER TO RESTRICT, MODIFY, OR REMOVE LANE CLOSURES OR CHANNELIZATION SHOWN ON THE PLANS. THE CONTRACTOR SHALL MAKE THE NECESSARY ADJUSTMENTS DIRECTED BY THE ENGINEER WITHOUT DELAY. THE CONTRACTOR SHALL RESPOND WITHIN 30 MINUTES FROM THE TIME OF NOTIFICATIONS BY THE ENGINEER FOR CORRECTION, IMPROVEMENT, OR MODIFICATION OF THE MAINTENANCE OF TRAFFIC CONTROL DEVICES.

3. THE ATTENTION OF THE CONTRACTOR IS DIRECTED TO STANDARD SPECIFICATIONS ARTICLE 105.08. THE WORK ON THIS PROJECT WILL BE IN PROGRESS AT THE SAME TIME AS WORK ON OTHER SEPARATE ADJACENT CONTRACTS WHICH MAY INTERSECT THE LIMITS OF THIS PROJECT. THE CONTRACTOR SHALL COOPERATE WITH THE OTHER CONTRACTORS IN THE PHASING AND PERFORMANCE OF THIS WORK SO AS NOT TO DELAY, INTERRUPT, OR HINDER THE PROGRESS OR COMPLETION OF THE WORK BEING PERFORMED BY OTHER CONTRACTORS. NO ADDITIONAL COMPENSATION WILL BE ALLOWED FOR COMPLIANCE WITH THE ABOVE REQUIREMENTS, NOR FOR ANY DELAYS OR INCONVENIENCES RESULTING FROM THE ACTIVITIES OF OTHER CONTRACTORS. SHOULD A CONFLICT ARISE BETWEEN THE CONTRACTORS WITH RESPECT TO SEQUENCE OF CONSTRUCTION OR MAINTENANCE OF TRAFFIC REQUIREMENTS, SAID CONFLICTS SHALL BE RESOLVED ACCORDING TO STANDARD SPECIFICATIONS ARTICLE 105.08. THE CONTRACTORS SHALL INFORM EACH OTHER OF PROGRESS OF INTERSECTING PROJECTS AND GIVE FAIR WARNING TO THE OTHER CONTRACTORS WHEN A PROBLEM MIGHT BE ENCOUNTERED.

4. CHANGEABLE MESSAGE SIGNS SHALL BE PROVIDED TWO WEEKS IN ADVANCE OF STAGE SWITCHES, MAJOR CHANGES IN TRAFFIC PATTERNS, NEW SIGNALS (STARTING ON THE DAY THEY ARE TURNED ON FOR 2 WEEKS), RAMP CLOSURES, ETC; AND TWO WEEKS IN ADVANCE OF START OF WORK. CHANGEABLE MESSAGE SIGNS SHALL BE PAID AT THE CONTRACT UNIT PRICE PER CALENDAR DAY. △1

5. TEMPORARY OFF-PEAK HOUR LANE CLOSURES AND FULL ROAD CLOSURES MUST BE REQUESTED THROUGH THE ENGINEER AND AS SPECIFIED IN THE SPECIAL PROVISIONS. WHEN OFF-PEAK HOUR, WEEKEND LANE CLOSURES, OR FULL ROAD CLOSURES ARE REQUIRED, A PORTABLE CHANGEABLE MESSAGE SIGN SHALL BE INSTALLED TWO WEEKS PRIOR TO THE CLOSURE. THE MESSAGE AND LOCATION OF THE SIGN WILL BE DETERMINED BY THE ENGINEER.

6. ALL ADVANCED WARNING SIGNS AND TEMPORARY PAVEMENT MARKINGS SHALL BE IN PLACE AND APPROVED BY THE ENGINEER PRIOR TO THE COMMENCEMENT OF ANY STAGE OF CONSTRUCTION.

7. UTILITIES AND BUILDINGS IN CONFLICT ARE TO BE REMOVED OR RELOCATED PRIOR TO CONSTRUCTION (BY OTHERS).

8. CONSTRUCTION TRAVEL TIME INFORMATION FOR SPECIFIC ROUTES DURING THE VARIOUS STAGES OF THE I-74 RECONSTRUCTION PROJECT WILL BE MANAGED UNDER A SEPARATE WORK ZONE TRAFFIC MANAGEMENT SYSTEM CONTRACT BY OTHERS. THAT CONTRACT WILL COLLECT TRAVEL TIME INFORMATION ON 19TH STREET AND THE ALTERNATE/DETOUR ROUTES, DETECT SPEEDS AND QUEUES DURING THE PEAK PERIODS, SUPPLEMENT EXISTING DIGITAL MESSAGE SIGN WITH PORTABLE DIGITAL MESSAGE SIGN (PDMS), COMMUNICATE TRAVEL TIME INFORMATION TO THE MOTORING PUBLIC THROUGH VARIOUS MESSAGING SOURCES. COORDINATION WITH THE WORK ZONE TRAFFIC SYSTEM CONTRACTOR WILL BE NECESSARY.

9. THE TEMPORARY CONCRETE BARRIER SHALL BE PINNED TO THE PAVEMENT WITH 3 PINS PER SECTION ON THE TRAFFIC SIDE OF THE BARRIER WALL AT THE LOCATIONS SHOWN ON THE STAGING PLAN SHEETS IN THE CONTRACT DOCUMENTS. THE BARRIER UNIT AT EACH END SHALL BE ANCHORED WITH 6 ANCHOR PINS AS SPECIFIED IN ARTICLE 704.04. ALL ANCHORING AND PINNING HOLES SHALL BE CORE DRILLED.

10. THE PAVEMENT SHOWN BETWEEN THE BARRIER WALL AND THE REMOVAL AND/OR CONSTRUCTION AREA SHALL BE MAINTAINED AS SHOWN IN THE PLANS AND KEPT CLEAR OF ALL HAZARDS, SUCH AS VEHICLES, EQUIPMENT AND MATERIALS. IF THESE AREAS ARE NOT MAINTAINED AS SHOWN, ANY PINNING THAT IS REQUIRED AS A RESULT OF NOT MAINTAINING THIS, AND ANY OTHER WORK REQUIRED TO PIN, SUCH AS PROVIDING TRAFFIC CONTROL FOR A LANE CLOSRUE SHALL BE THE RESPONSIBILTY OF THE CONTRACTOR. THE MINIMUM PAVEMENT TO REMAIN IN PLACE BETWEEN THE BARRIER AND REMOVAL AREA SHALL BE 6 INCHES, EVEN WHEN THE BARRIER WALL IS PINNED.

TEMPORARY PAVEMENT TRANSITION DETAIL

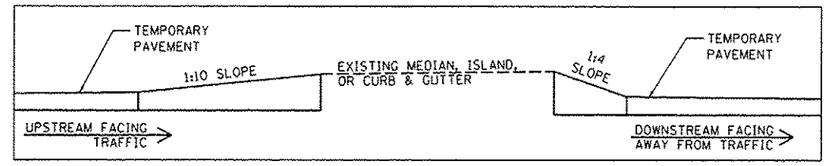

PEDESTRIAN NOTES

1. THE CONTRACTOR WILL BE RESPONSIBLE FOR ENSURING THAT ALL RESIDENCES, BUSINESSES AND OTHER FACILITIES ARE ACCESSIBLE AT ALL TIMES.

2. AT EACH POINT OF CLOSURE, A SUFFICIENT NUMBER OF BARRICADES MUST BE USED TO COMPLETELY CLOSE THE PATHWAY.

3. PEDESTRIAN WALKWAYS MUST BE MAINTAINED FREE OF ANY OBSTRUCTIONS AND HAZARDS SUCH AS HOLES, DEBRIS, MUD, CONSTRUCTION EQUIPMENT, STORED MATERIALS, ETC, AND MUST BE BROOM SWEPT DAILY OR AS DIRECTED BY THE ENGINEER.

4. ALL HAZARDS NEAR OR ADJACENT TO WALKWAYS MUST BE CLEARLY DELINEATED.

5. THE CONTRACTOR MUST MAINTAIN DISABLED PERSON PEDESTRIAN ACCESS TO CROSSWALKS AT ALL TIMES VIA ADA COMPLIANT WALKWAYS AND RAMPS THROUGH THE WORK ZONES. THESE ACCESSES MUST BE OBSERVED AND PROTECTED BY THE CONTRACTOR AT ALL TIMES.

WPV	MGJ	MTH
11/3/2014	12/15/2016	12/22/2016

LAYOUT / DRAWN / REVISED

MOT-01

FILE NAME = 02C08-HPS-sht-staging700M.dgn	USER NAME = heato01447	DESIGNED - MGJ	REVISED - △1 05/16/17	STATE OF ILLINOIS DEPARTMENT OF TRANSPORTATION
		DRAWN - MGJ	REVISED -	
	PLOT SCALE = 1" = 300'	CHECKED - MTH	REVISED -	
	PLOT DATE = 5/30/2017	DATE - 1/20/2017	REVISED -	

STAGING PLAN
STAGING GENERAL NOTES

SCALE: 1" = 300' | SHEET NO. OF SHEETS | STA. TO STA.

F.A.I RTE.	SECTION	COUNTY	TOTAL SHEETS	SHEET NO.
74	(81-1)R & 81-1)HVBR	ROCK ISLAND	1504	145

CONTRACT NO. 64C08

ILLINOIS FED. AID PROJECT

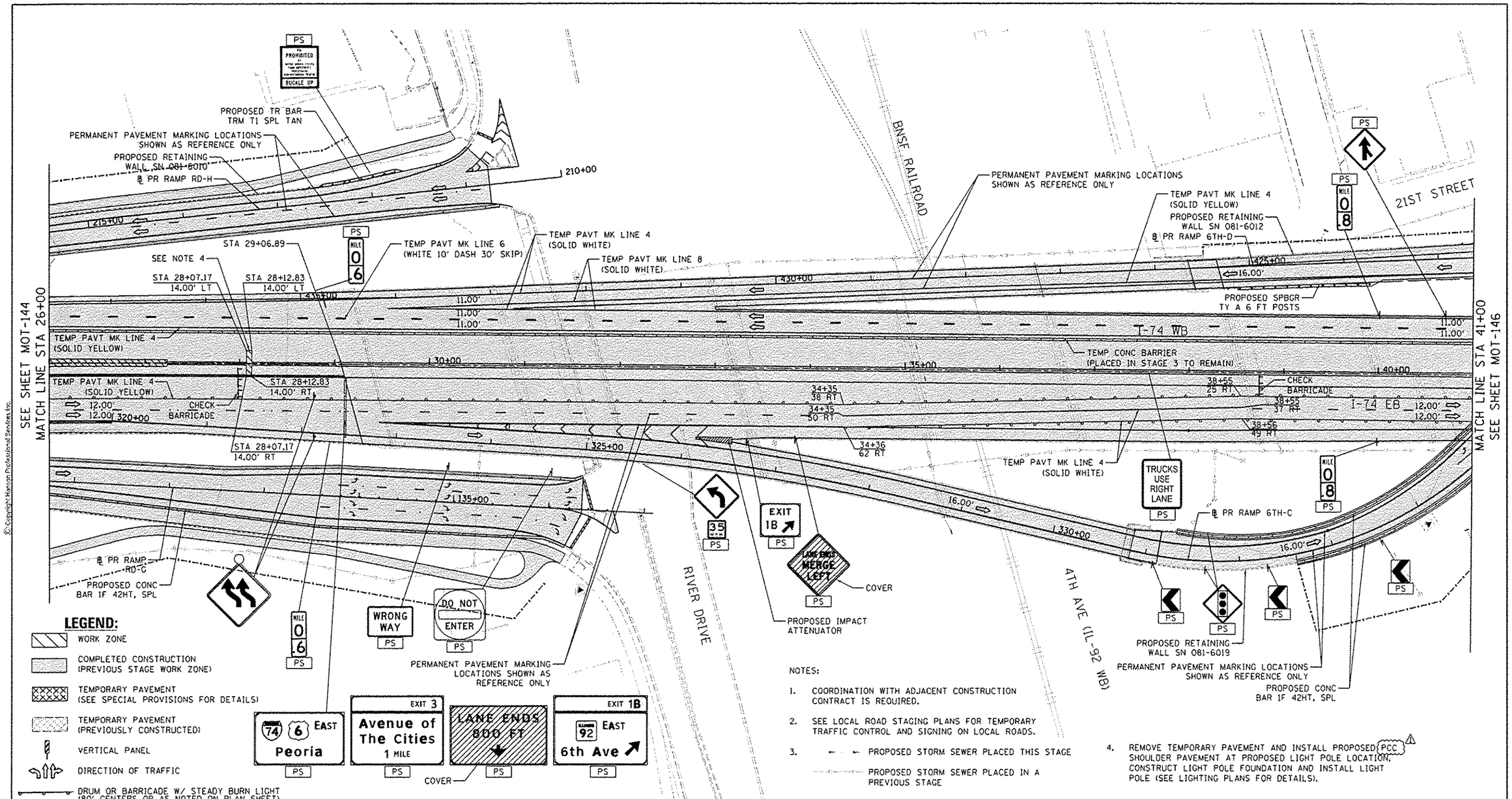

LEGEND:

- WORK ZONE
- COMPLETED CONSTRUCTION (PREVIOUS STAGE WORK ZONE)
- TEMPORARY PAVEMENT (SEE SPECIAL PROVISIONS FOR DETAILS)
- TEMPORARY PAVEMENT (PREVIOUSLY CONSTRUCTED)
- VERTICAL PANEL
- DIRECTION OF TRAFFIC
- DRUM OR BARRICADE W/ STEADY BURN LIGHT (80' CENTERS OR AS NOTED ON PLAN SHEET)
- DIRECTIONAL INDICATOR BARRICADE W/ STEADY BURN LIGHT
- SIGN
- TYPE III BARRICADE W/ 2 FLASHING LIGHTS
- ARROW BOARD
- IMPACT ATTENUATORS
- TEMPORARY PAVEMENT MARKING LETTERS AND SYMBOLS
- PORTABLE CHANGEABLE MESSAGE SIGN

NOTES:

1. COORDINATION WITH ADJACENT CONSTRUCTION CONTRACT IS REQUIRED.
2. SEE LOCAL ROAD STAGING PLANS FOR TEMPORARY TRAFFIC CONTROL AND SIGNING ON LOCAL ROADS.
3. PROPOSED STORM SEWER PLACED THIS STAGE
   PROPOSED STORM SEWER PLACED IN A PREVIOUS STAGE

   SEE DRAINAGE & UTILITY PLAN SHEETS FOR DETAILS.
4. REMOVE TEMPORARY PAVEMENT AND INSTALL PROPOSED PCC SHOULDER PAVEMENT AT PROPOSED LIGHT POLE LOCATION. CONSTRUCT LIGHT POLE FOUNDATION AND INSTALL LIGHT POLE (SEE LIGHTING PLANS FOR DETAILS).

SIGN LEGEND:

RSP	REMOVE SIGN PANEL AND POST
RLSP	RELOCATE SIGN PANEL
SRIP	SIGN REMAIN IN PLACE
PS	PROPOSED SIGN SEE SIGNING PLANS FOR DETAILS

SCALE: 0 50' 100'

MOT-145

HANSON

LAYOUT	MGJ	11/21/2014
DRAWN	MGJ	12/15/2016
REVISED	MTH	12/22/2016

FILE NAME = D2CONA8-HPS-sht-staging883M.dgn	USER NAME = peteb82954	DESIGNED - MGJ	REVISED - 05/16/17
		DRAWN - MGJ	REVISED -
	PLOT SCALE = 1" = 50'	CHECKED - MTH	REVISED -
	PLOT DATE = 4/11/2017	DATE - 1/20/2017	REVISED -

STATE OF ILLINOIS
DEPARTMENT OF TRANSPORTATION

STAGING PLAN
I-74 MAINLINE
STAGE 3-4

SCALE: 1" = 50' | SHEET NO. OF SHEETS | STA. 26+00 TO STA. 41+00

F.A.I. RTE.	SECTION	COUNTY	TOTAL SHEETS	SHEET NO.
74	(81-1)R & 81-1HVBR	ROCK ISLAND	1504	289

CONTRACT NO. 64C08

ILLINOIS FED. AID PROJECT

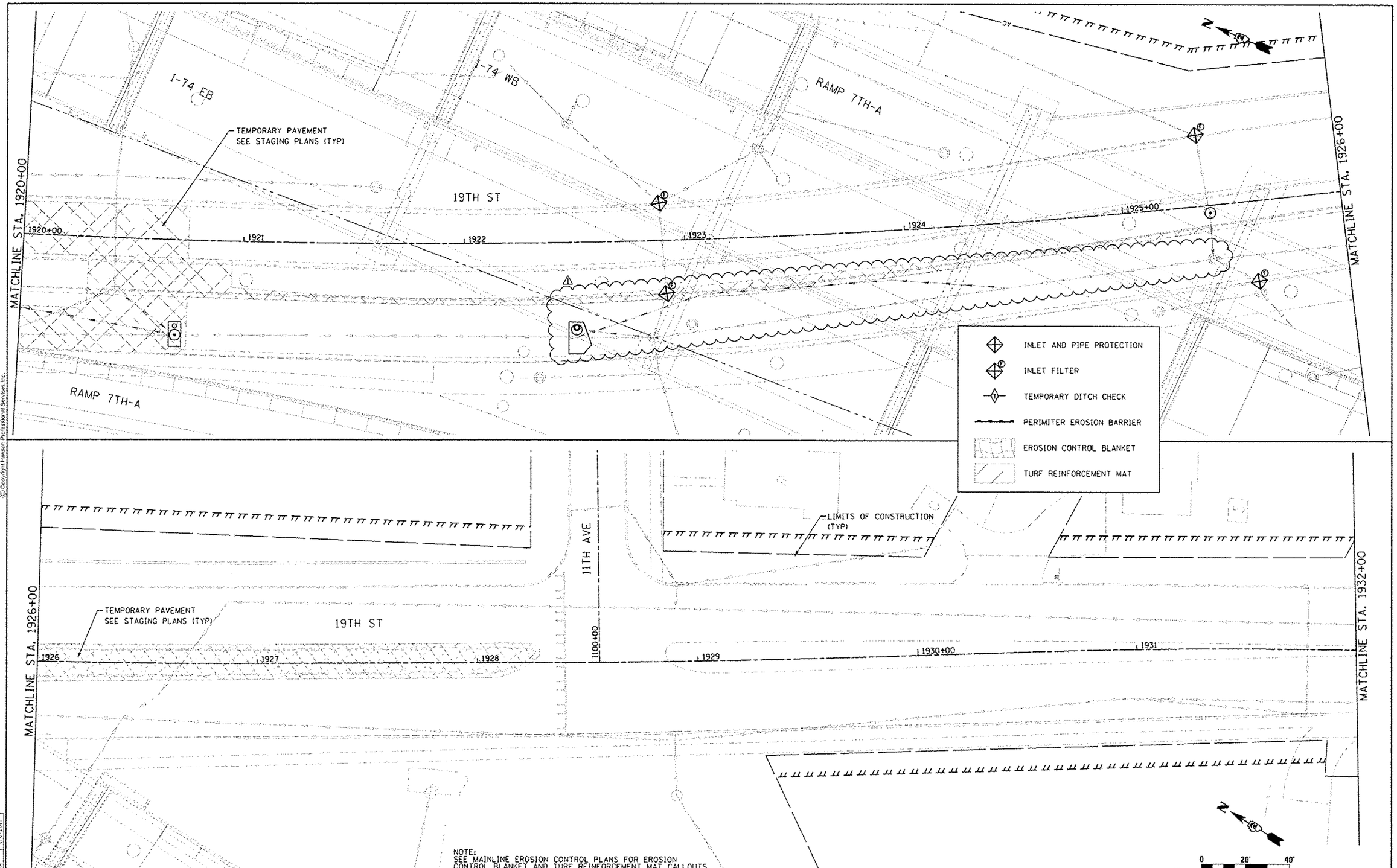

NOTE:
SEE MAINLINE EROSION CONTROL PLANS FOR EROSION CONTROL BLANKET AND TURF REINFORCEMENT MAT CALLOUTS

HANSON

LAYOUT	JJW	7/23/2014
DRAWN	JJW	11/19/2014
REVIEWED	MKA	1/6/2017

FILE NAME = D2CONAB-HPS-sht-eros22L.dgn	USER NAME = pate00954	DESIGNED - JJW	REVISED - ⚠ 05/16/17
		DRAWN - JJW	REVISED -
	PLOT SCALE = 1" = 20'	CHECKED - MKA	REVISED -
	PLOT DATE = 5/26/2017	DATE - 1/20/2017	REVISED -

STATE OF ILLINOIS
DEPARTMENT OF TRANSPORTATION

EROSION AND SEDIMENT CONTROL
19TH STREET

SCALE: 1" = 20' | SHEET NO. OF SHEETS | STA. 1920+00 TO STA. 1932+00

ESC-11

F.A.I. RTE.	SECTION	COUNTY	TOTAL SHEETS	SHEET NO.
74	(81-1)R & B1-1)HVBR	ROCK ISLAND	1504	327
		CONTRACT NO. 64C08		
		ILLINOIS FED. AID PROJECT		

NOTES:

1. FOR PROPOSED STORM SEWER ALONG LENGTH OF 21ST STREET REFER TO SHEET DRUL-01.
2. OFFSETS AND ELEVATIONS TO DRAINAGE STRUCTURES ALONG PROPOSED CURB AND GUTTER ARE GIVEN AT THE PROPOSED EDGE OF PAVEMENT.
3. REMOVAL LOCATIONS WILL BE SHOWN IN THE REMOVAL PLANS AND CALLED OUT IN DETAIL IN THE SCHEDULE OF QUANTITIES.
4. FOR CLARITY ONLY EASTBOUND DRAINAGE CALLOUTS SHOWN ON THIS SHEET. SEE SHEET DRUM-04 FOR WESTBOUND CALLOUTS.
5. SEE SHEET DRUM-01 FOR LEGEND.
6. MH A48 IS INSTALLED IN STAGE 1-1. ALL TEMPORARY INLETS ARE INSTALLED IN STAGE 2-0. ALL TEMPORARY INLETS ARE REMOVED IN STAGE 3-2. MH A48 IS RECONSTRUCTED IN STAGE 3-2
7. UNLESS OTHERWISE NOTED, ALL NEW CLOSED LID MANHOLE COVERS SHOULD HAVE THE WORD "STORM" ON THE LID
8. ALL STORM SEWERS CROSSING BNSF RAILROAD ROW SHALL BE COORDINATED WITH THE RAILROAD. THE WORK SHALL COMPLY WITH THE MOST RECENT EDITION OF THE BNSF UTILITY POLICY
9. THE JACKING CONTRACTOR FOR THE STORM SEWER SHOULD REFERENCE BORING LOGS VIAIL-119/VIAIL-121 FOR PIPE A7-A13b, VIAIL-110/VIAIL-112 FOR PIPE B39-S16, AND PRMPD-04/PRMPD-06 FOR PIPE A16a-A16b. SO SUBSURFACE SOIL CONDITIONS ARE KNOWN FOR PROPER INSTALLATION METHODS

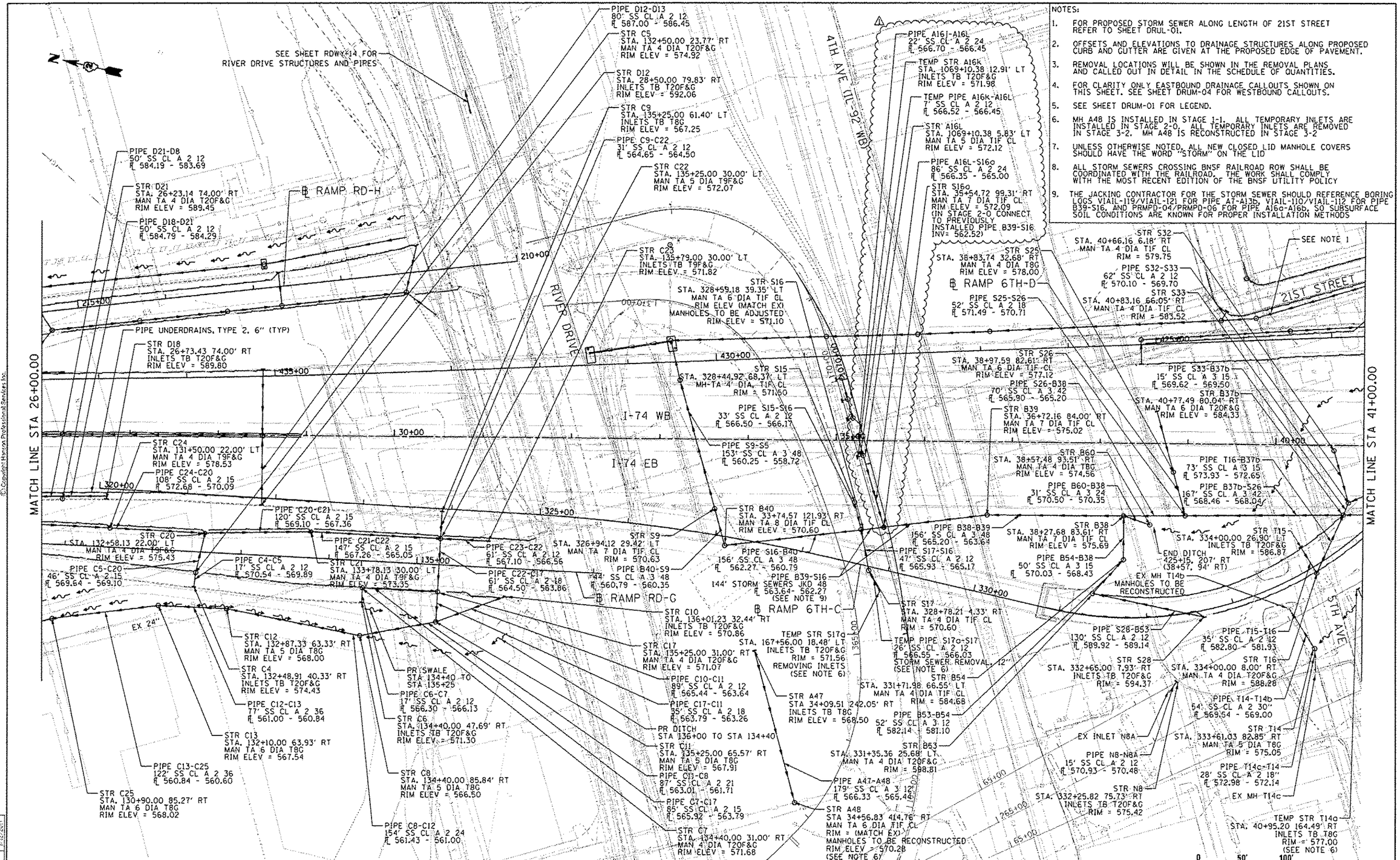

LAYOUT	JJW	7/23/2014	FILE NAME =	USER NAME = wsi13b1457	DESIGNED - JJW
DRAWN	JJW	11/19/2014	D2CONAB-HPS-sht-drun003M.dgn		DRAWN - JJW
REVISED	MPB	1/12/2017		PLOT SCALE = 1" = 50'	CHECKED - MPB
				PLOT DATE = 4/13/2017	DATE - 1/20/2017

REVISED - ⚠ 05/16/17
REVISED -
REVISED -
REVISED -

STATE OF ILLINOIS
DEPARTMENT OF TRANSPORTATION

DRAINAGE AND UTILITIES SHEETS
PLAN
I-74 MAINLINE

SCALE: 1" = 50' | SHEET NO. OF SHEETS | STA. 26+00 TO STA. 41+00

F.A.I RTE.	SECTION	COUNTY	TOTAL SHEETS	SHEET NO.
74	(81-1)R & 81-1)HVBR	ROCK ISLAND	1504	333

CONTRACT NO. 64C08

ILLINOIS FED. AID PROJECT

DRUM-03

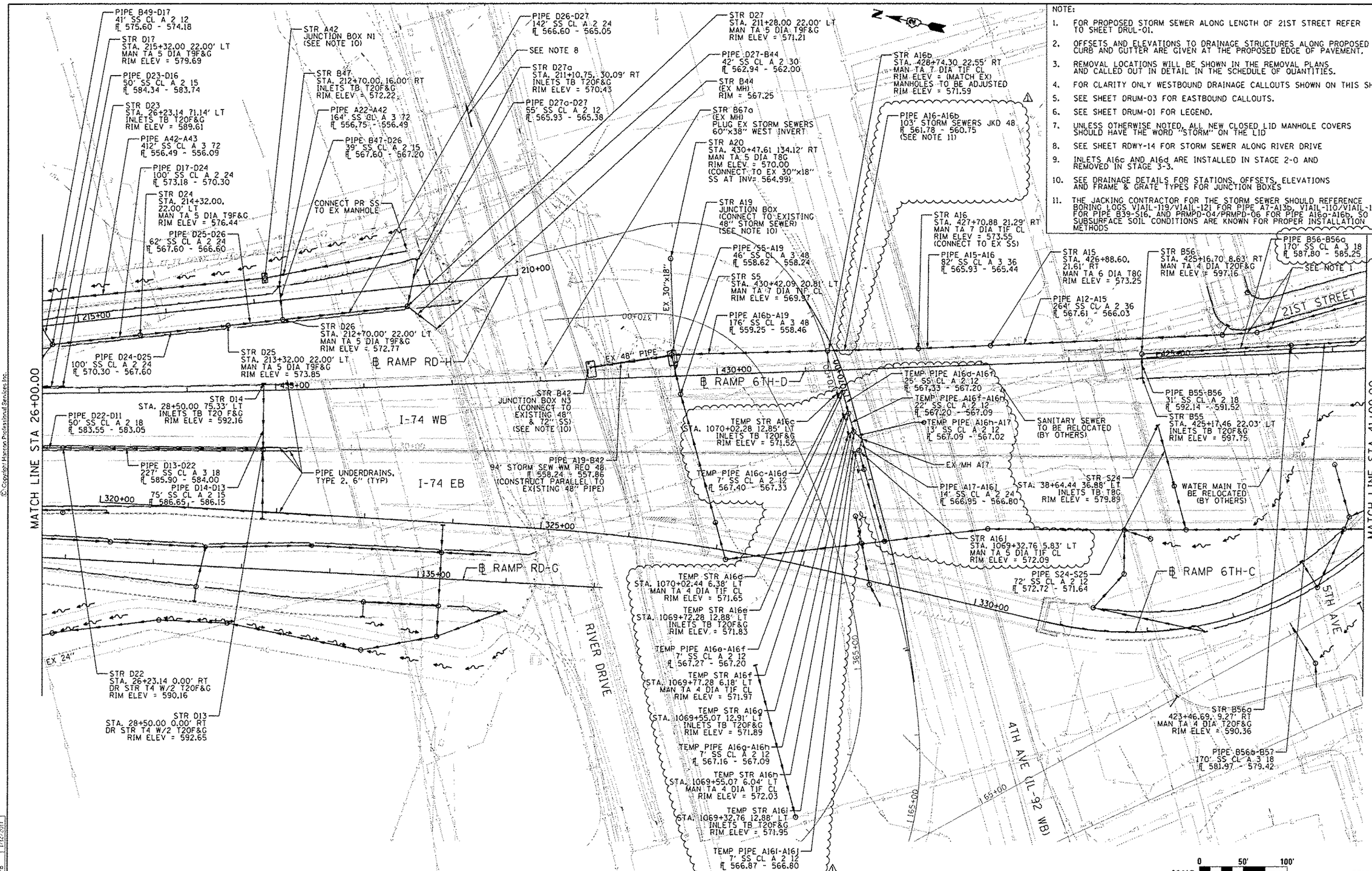

NOTE:

1. FOR PROPOSED STORM SEWER ALONG LENGTH OF 21ST STREET REFER TO SHEET DRUL-01.
2. OFFSETS AND ELEVATIONS TO DRAINAGE STRUCTURES ALONG PROPOSED CURB AND GUTTER ARE GIVEN AT THE PROPOSED EDGE OF PAVEMENT.
3. REMOVAL LOCATIONS WILL BE SHOWN IN THE REMOVAL PLANS AND CALLED OUT IN DETAIL IN THE SCHEDULE OF QUANTITIES.
4. FOR CLARITY ONLY WESTBOUND DRAINAGE CALLOUTS SHOWN ON THIS SHEET.
5. SEE SHEET DRUM-03 FOR EASTBOUND CALLOUTS.
6. SEE SHEET DRUM-01 FOR LEGEND.
7. UNLESS OTHERWISE NOTED, ALL NEW CLOSED LID MANHOLE COVERS SHOULD HAVE THE WORD "STORM" ON THE LID
8. SEE SHEET RDWY-14 FOR STORM SEWER ALONG RIVER DRIVE
9. INLETS A16c AND A16d ARE INSTALLED IN STAGE 2-0 AND REMOVED IN STAGE 3-3.
10. SEE DRAINAGE DETAILS FOR STATIONS, OFFSETS, ELEVATIONS AND FRAME & GRATE TYPES FOR JUNCTION BOXES
11. THE JACKING CONTRACTOR FOR THE STORM SEWER SHOULD REFERENCE BORING LOGS VIAIL-119/VIAIL-121 FOR PIPE A7-A13b, VIAIL-110/VIAIL-112 FOR PIPE B39-S16, AND PRMPD-04/PRMPD-06 FOR PIPE A16a-A16b. SO SUBSURFACE SOIL CONDITIONS ARE KNOWN FOR PROPER INSTALLATION METHODS

SCALE: 0 50' 100'

DRUM-04

HANSON

LAYOUT	JJW	7/23/2014
DRAWN	JJW	11/19/2014
REVIEWED	MPB	1/12/2017

FILE NAME = D2CDNAB-HPS-sht-d-ain813M.dgn	USER NAME = w11101457	DESIGNED - JJW	REVISED - 05/16/17
		DRAWN - JJW	REVISED -
	PLOT SCALE = 1" = 50'	CHECKED - MPB	REVISED -
	PLOT DATE = 4/13/2017	DATE - 1/20/2017	REVISED -

STATE OF ILLINOIS
DEPARTMENT OF TRANSPORTATION

DRAINAGE AND UTILITIES SHEETS
PLAN
I-74 MAINLINE

SCALE: 1" = 50' | SHEET NO. OF SHEETS | STA. 26+00 TO STA. 41+00

F.A.I RTE.	SECTION	COUNTY	TOTAL SHEETS	SHEET NO.
74	(81-1)R & (81-1)HVBR	ROCK ISLAND	1504	334

CONTRACT NO. 64C08

ILLINOIS FED. AID PROJECT

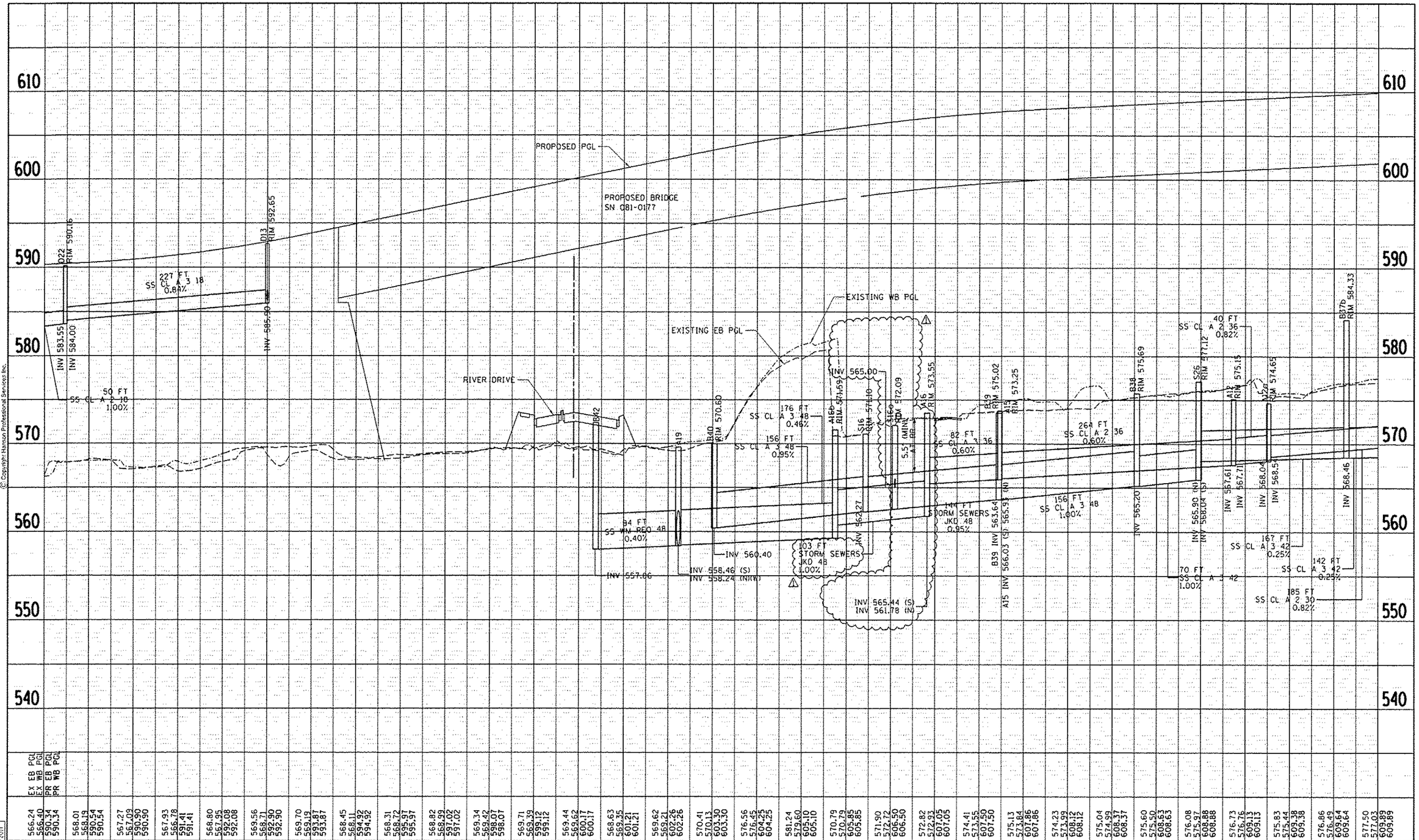

	EX EB PGL	EX WB PGL	PR EB PGL	PR WB PGL
26+00	566.24	566.40	590.34	590.34
	568.01	568.19	590.54	590.54
27+00	567.27	567.09	590.90	590.90
	567.93	566.78	591.41	591.41
28+00	568.80	567.95	592.08	592.08
	569.56	568.71	592.90	592.90
29+00	569.70	569.19	593.87	593.87
	568.45	568.11	594.92	594.92
30+00	568.31	568.72	595.97	595.97
	568.82	568.99	597.02	597.02
31+00	569.34	569.42	598.07	598.07
	569.71	569.39	599.12	599.12
32+00	569.44	569.62	600.17	600.17
	568.63	569.35	601.21	601.21
33+00	569.62	569.21	602.26	602.26
	570.41	570.13	603.30	603.30
34+00	576.56	576.45	604.25	604.25
	581.24	579.60	605.10	605.10
35+00	570.79	570.79	605.85	605.85
	571.90	572.72	606.50	606.50
36+00	572.82	572.93	607.05	607.05
	574.41	573.55	607.50	607.50
37+00	575.13	573.84	607.86	607.86
	574.23	573.99	608.12	608.12
38+00	575.04	574.99	608.37	608.37
	575.60	575.50	608.63	608.63
39+00	576.08	575.97	608.88	608.88
	576.73	576.76	609.13	609.13
40+00	575.83	575.44	609.38	609.38
	576.86	576.49	609.64	609.64
41+00	577.50	577.03	609.89	609.89

HORZ SCALE: 0 50' 100'

VERT SCALE: 0 5' 10'

DRUM-05

LAYOUT	JJW	7/23/2014
DRAWN	JJW	11/19/2014
REVIEWED	MPB	1/12/2017

FILE NAME = 02CONAB-HPS-sht-drain053M.dgn

USER NAME = w11.01457

PLOT SCALE = 1" = 50'

PLOT DATE = 4/13/2017

DESIGNED	- JJW	REVISED	⚠ 05/16/17
DRAWN	- JJW	REVISED	-
CHECKED	- MPB	REVISED	-
DATE	- 1/20/2017	REVISED	-

STATE OF ILLINOIS
DEPARTMENT OF TRANSPORTATION

DRAINAGE AND UTILITIES SHEETS
PROFILE
I-74 MAINLINE

SCALE: 1" = 50' | SHEET NO. OF SHEETS | STA. 26+00 TO STA. 41+00

F.A.I RTE.	SECTION	COUNTY	TOTAL SHEETS	SHEET NO.
74	(81-1)R & 81-1HVBR	ROCK ISLAND	1504	335

CONTRACT NO. 64C08

ILLINOIS FED. AID PROJECT

HANSON

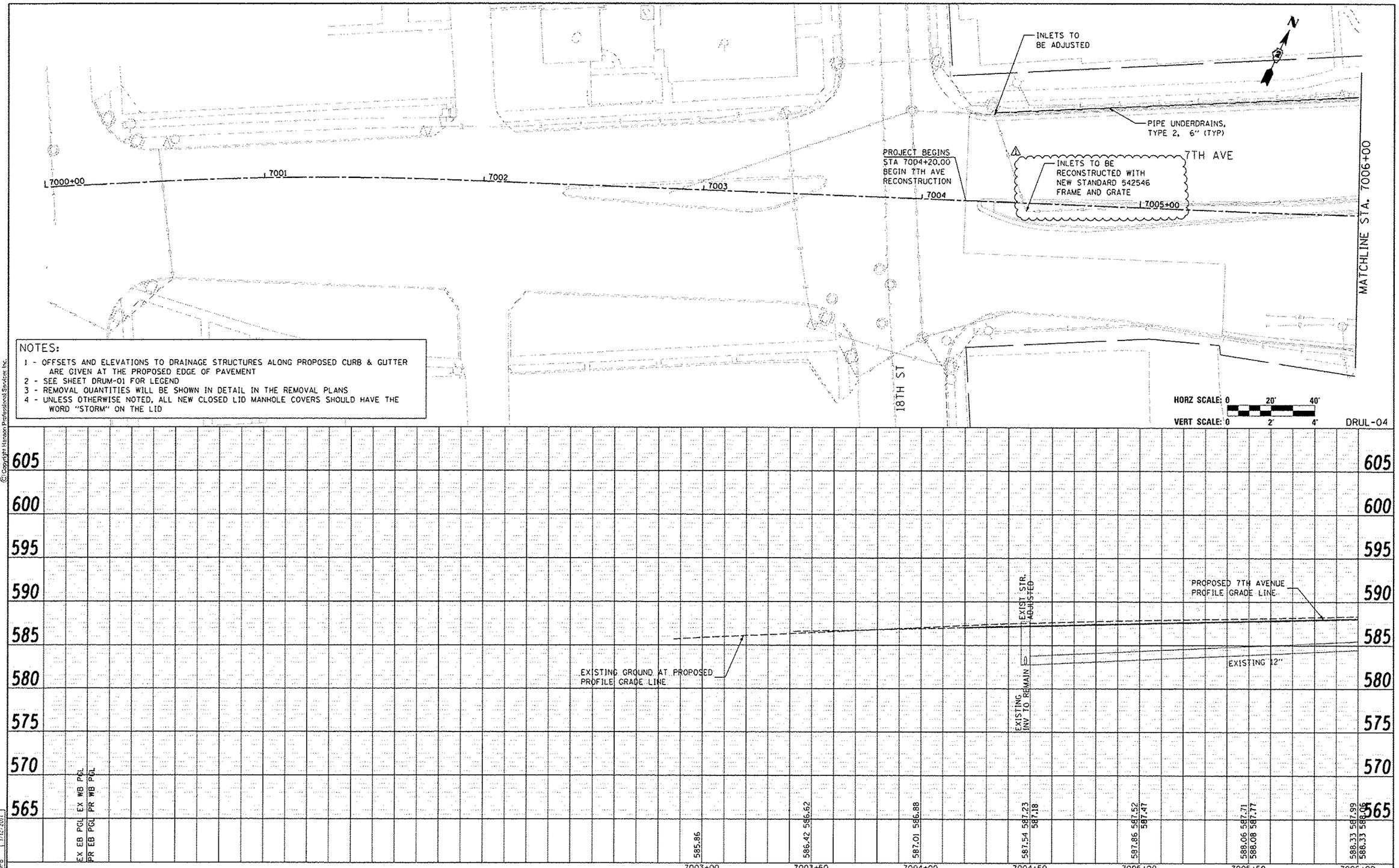

NOTES:

1 - OFFSETS AND ELEVATIONS TO DRAINAGE STRUCTURES ALONG PROPOSED CURB & GUTTER ARE GIVEN AT THE PROPOSED EDGE OF PAVEMENT
2 - SEE SHEET DRUM-01 FOR LEGEND
3 - REMOVAL QUANTITIES WILL BE SHOWN IN DETAIL IN THE REMOVAL PLANS
4 - UNLESS OTHERWISE NOTED, ALL NEW CLOSED LID MANHOLE COVERS SHOULD HAVE THE WORD "STORM" ON THE LID

LAYOUT	JJW	7/23/2014
DRAWN	JJW	11/19/2014
REVIEWED	MPB	1/12/2017

FILE NAME = D2CONAB-HPS-sht-drainIRL.dgn	USER NAME = wilt0457	DESIGNED - JJW	REVISED - 05/16/17
		DRAWN - JJW	REVISED -
	PLOT SCALE = 1" = 20'	CHECKED - MPB	REVISED -
	PLOT DATE = 4/27/2017	DATE - 1/20/2017	REVISED -

STATE OF ILLINOIS
DEPARTMENT OF TRANSPORTATION

DRAINAGE AND UTILITIES SHEETS
PLAN AND PROFILE
7TH AVENUE

SCALE: 1" = 20' | SHEET NO. OF SHEETS | STA. 7000+00 TO STA. 7006+00

F.A.I RTE.	SECTION	COUNTY	TOTAL SHEETS	SHEET NO.
74	(81-1)R & 81-1HVBR	ROCK ISLAND	1504	347
		CONTRACT NO. 64C08		
		ILLINOIS FED. AID PROJECT		

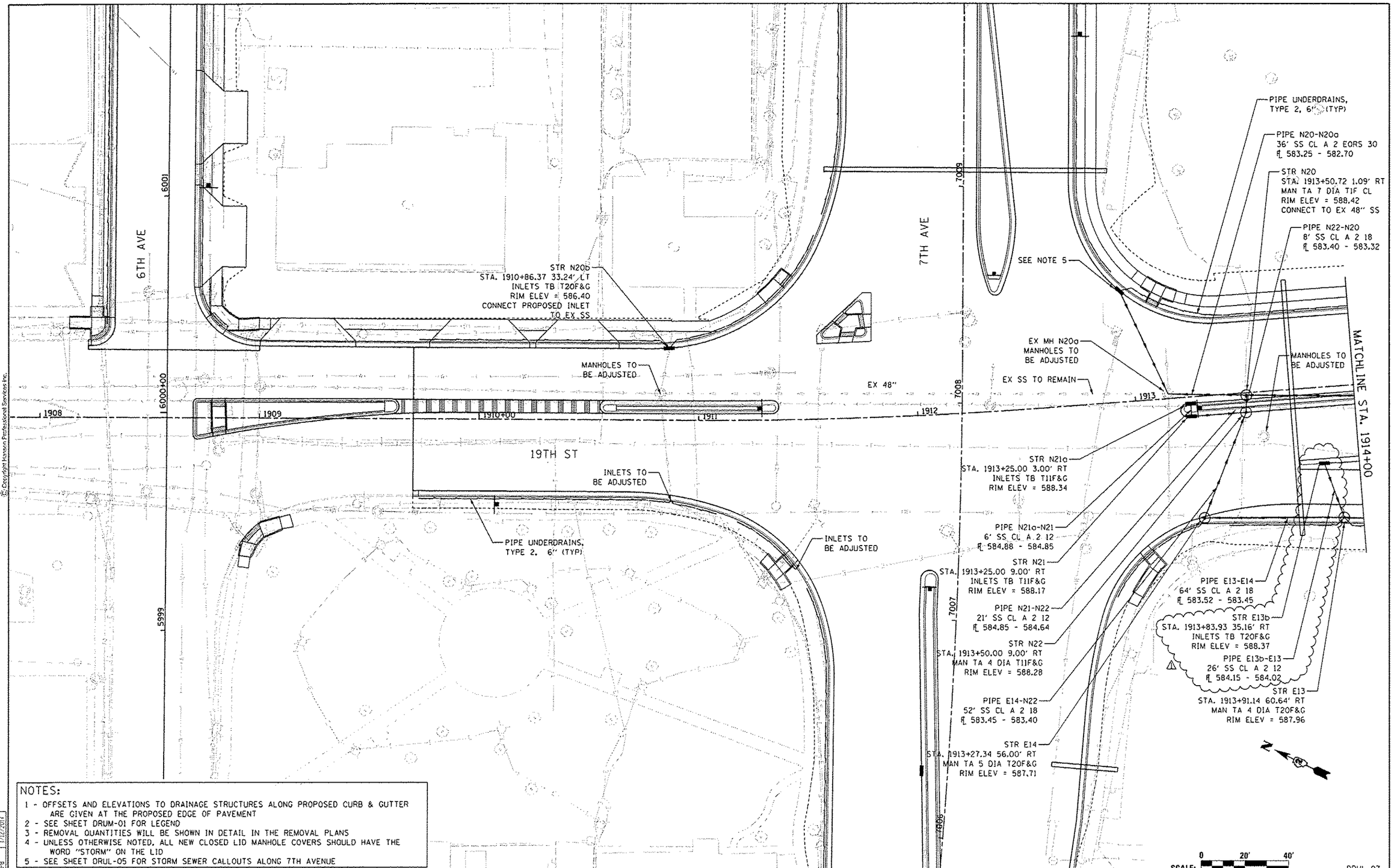

NOTES:

1 - OFFSETS AND ELEVATIONS TO DRAINAGE STRUCTURES ALONG PROPOSED CURB & GUTTER ARE GIVEN AT THE PROPOSED EDGE OF PAVEMENT
2 - SEE SHEET DRUM-01 FOR LEGEND
3 - REMOVAL QUANTITIES WILL BE SHOWN IN DETAIL IN THE REMOVAL PLANS
4 - UNLESS OTHERWISE NOTED, ALL NEW CLOSED LID MANHOLE COVERS SHOULD HAVE THE WORD "STORM" ON THE LID
5 - SEE SHEET DRUL-05 FOR STORM SEWER CALLOUTS ALONG 7TH AVENUE

HANSON

LAYOUT	JJW	7/23/2014
DRAWN	JJW	11/19/2014
REVIEWED	MPB	1/12/2017

FILE NAME : D2CONAB-HPS-sht-drun14L.dgn	USER NAME : s-ill01457	DESIGNED - JJW	REVISED 05/16/17	STATE OF ILLINOIS DEPARTMENT OF TRANSPORTATION
		DRAWN - JJW	REVISED -	
	PLOT SCALE : 1" = 20'	CHECKED - MPB	REVISED -	
	PLOT DATE : 4/13/2017	DATE - 1/20/2017	REVISED -	

DRAINAGE AND UTILITIES SHEETS
PLAN
19TH STREET

SCALE: 1" = 20' | SHEET NO. OF SHEETS | STA. 1908+00 TO STA. 1914+00

DRUL-07

F.A.I RTE.	SECTION	COUNTY	TOTAL SHEETS	SHEET NO.
74	(81-1)R & 81-1HVBR	ROCK ISLAND	1504	350

CONTRACT NO. 64C08

ILLINOIS FED. AID PROJECT

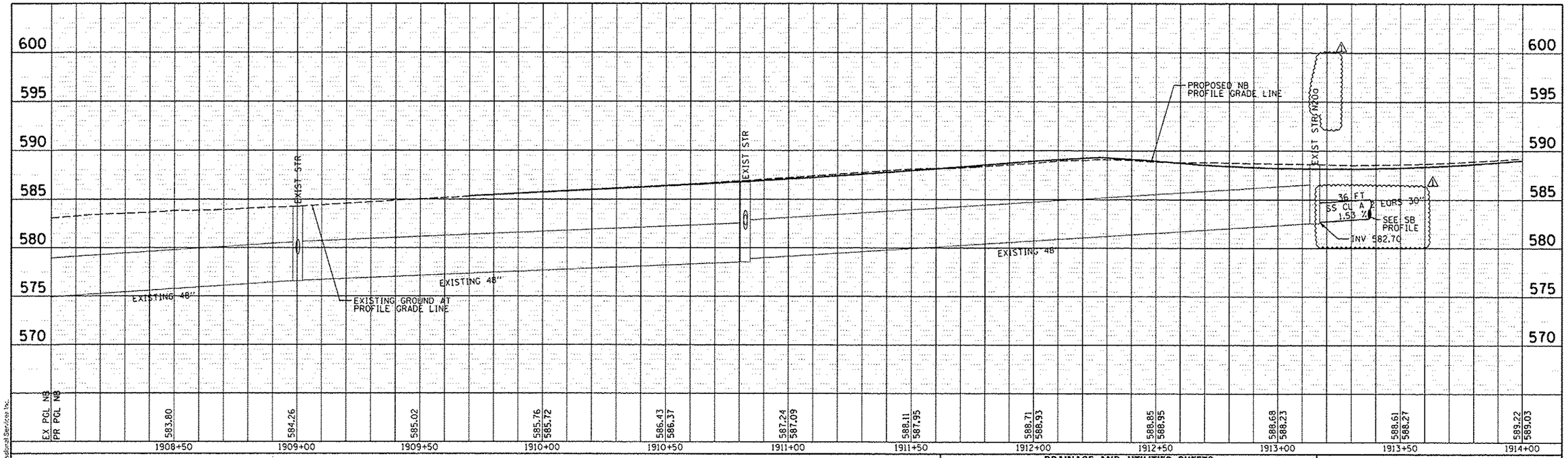

DRAINAGE AND UTILITIES SHEETS
PROFILE
NORTHBOUND

HORZ SCALE: 0 20' 40'
VERT SCALE: 0 5' 10'

DRUL-08

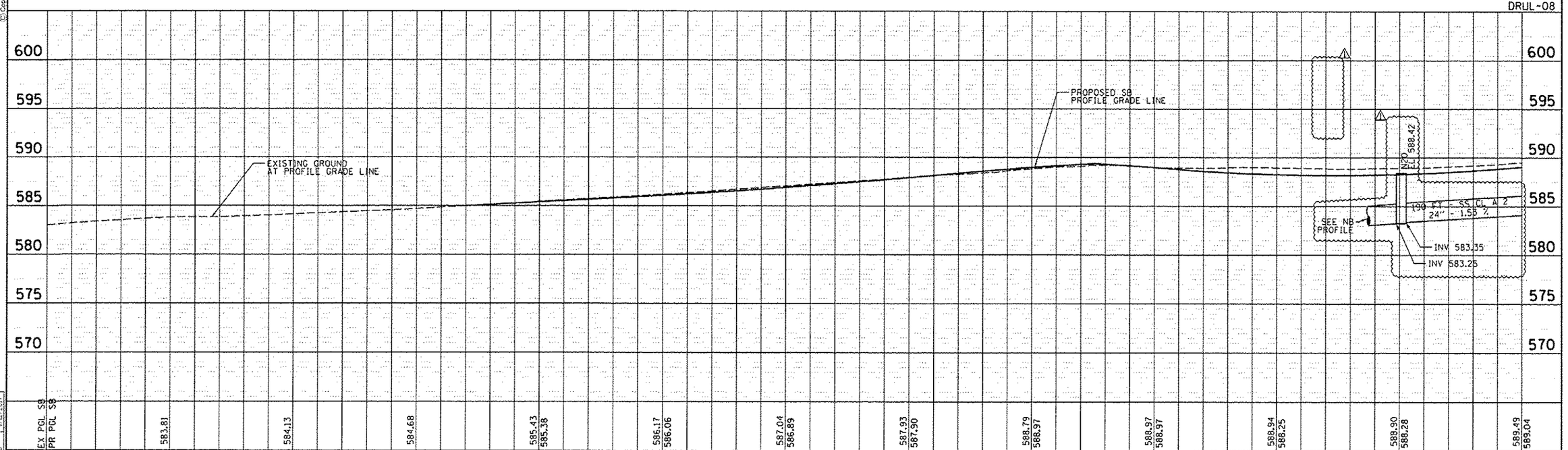

LAYOUT	JJW	1/23/2014
DRAWN	JJW	11/19/2014
REVIEWED	MPB	1/12/2017

FILE NAME = D2CONAB-HPS-sht-drain34L.dgn

USER NAME = peike00954
PLOT SCALE = 1" = 20'
PLOT DATE = 4/11/2017

DESIGNED - JJW
DRAWN - JJW
CHECKED - MPB
DATE - 1/20/2017

REVISED 1 - 05/16/17
REVISED -
REVISED -
REVISED -

STATE OF ILLINOIS
DEPARTMENT OF TRANSPORTATION

DRAINAGE AND UTILITIES SHEETS
PROFILE
19TH STREET SOUTHBOUND

SCALE: 1" = 20' | SHEET NO. OF SHEETS | STA. 1908+00 TO STA. 1914+00

F.A.I RTE.	SECTION	COUNTY	TOTAL SHEETS	SHEET NO.
74	(81-1)R & 81-1HVBR	ROCK ISLAND	1504	351

CONTRACT NO. 64C08

ILLINOIS FED. AID PROJECT

NOTES:

(1) - FOR PROPOSED STORM SEWER ALONG LENGTH OF I-74, REFER TO PLANS BY OTHERS
(2) - OFFSETS AND ELEVATIONS TO DRAINAGE STRUCTURES ALONG PROPOSED CURB & GUTTER ARE GIVEN AT THE PROPOSED EDGE OF PAVEMENT
(3) - SEE SHEET DRUM-01 FOR LEGEND
(4) - REMOVAL QUANTITIES WILL BE SHOWN IN DETAIL IN THE REMOVAL PLANS
(5) - UNLESS OTHERWISE NOTED, ALL NEW CLOSED LID MANHOLE COVERS SHOULD HAVE THE WORD "STORM" ON THE LID
(6) - SEE DRAINAGE DETAILS FOR STATIONS, OFFSETS, ELEVATIONS AND FRAME & GRATE TYPES FOR JUNCTION BOXES

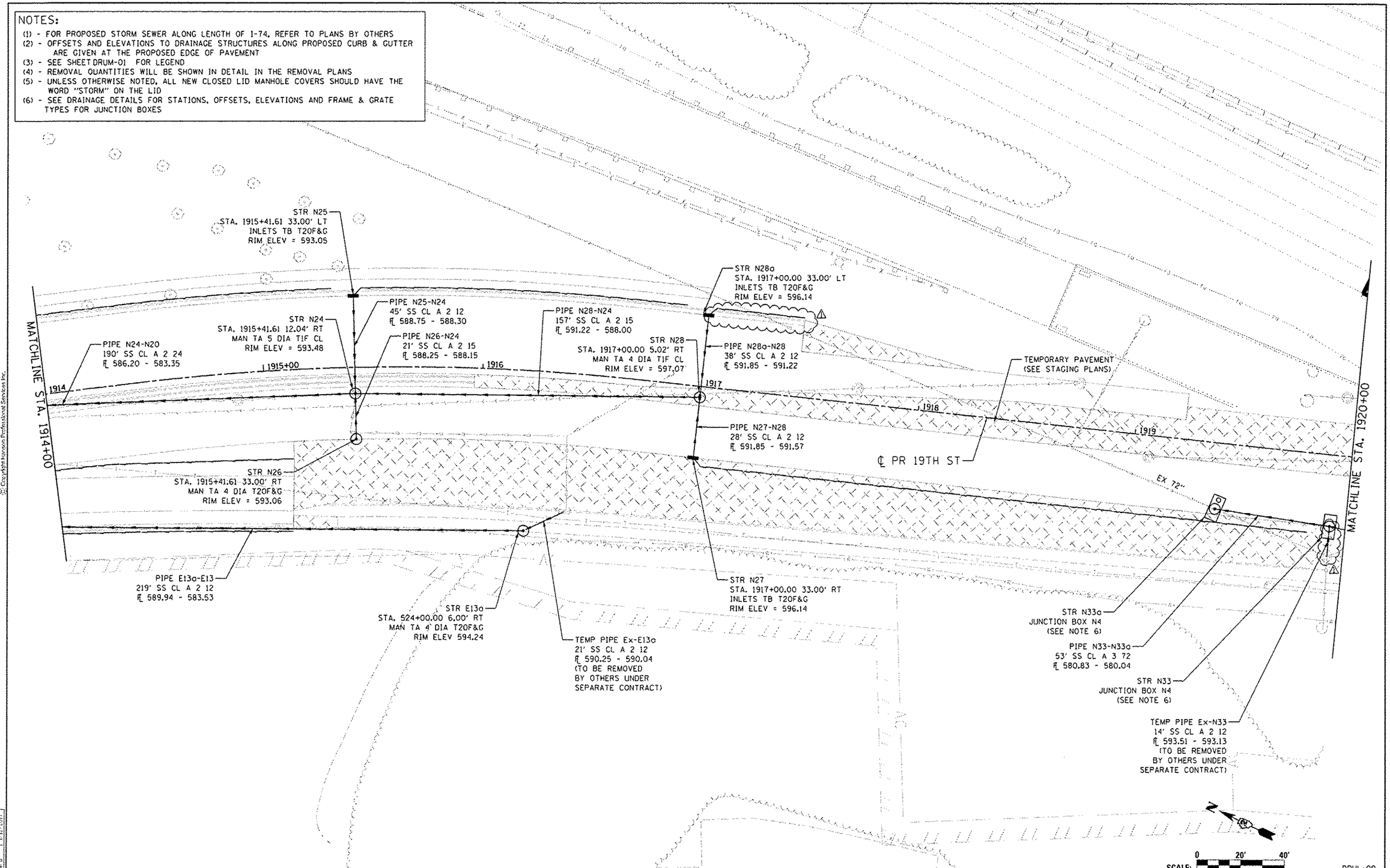

HANSON

LAYOUT	JJW	7/23/2014
DRAWN	JJW	11/19/2014
REVIEWED	MPB	1/13/2015

FILE NAME = 02CONAB-HPS-sht-drainIL.dgn	USER NAME = wilt01457	DESIGNED - JJW	REVISED 05/16/17
		DRAWN - JJW	REVISED -
	PLOT SCALE = 1" = 20'	CHECKED - MPB	REVISED -
	PLOT DATE = 4/13/2017	DATE - 1/20/2017	REVISED -

STATE OF ILLINOIS
DEPARTMENT OF TRANSPORTATION

DRAINAGE AND UTILITIES SHEETS
PLAN
19TH STREET

SCALE: 1" = 20' | SHEET NO. OF SHEETS | STA. 1914+00 TO STA. 1920+00

F.A.I RTE.	SECTION	COUNTY	TOTAL SHEETS	SHEET NO.
74	(81-1)R & 81-1)HVBR	ROCK ISLAND	1504	352

CONTRACT NO. 64C08

ILLINOIS FED. AID PROJECT

DRUL-09

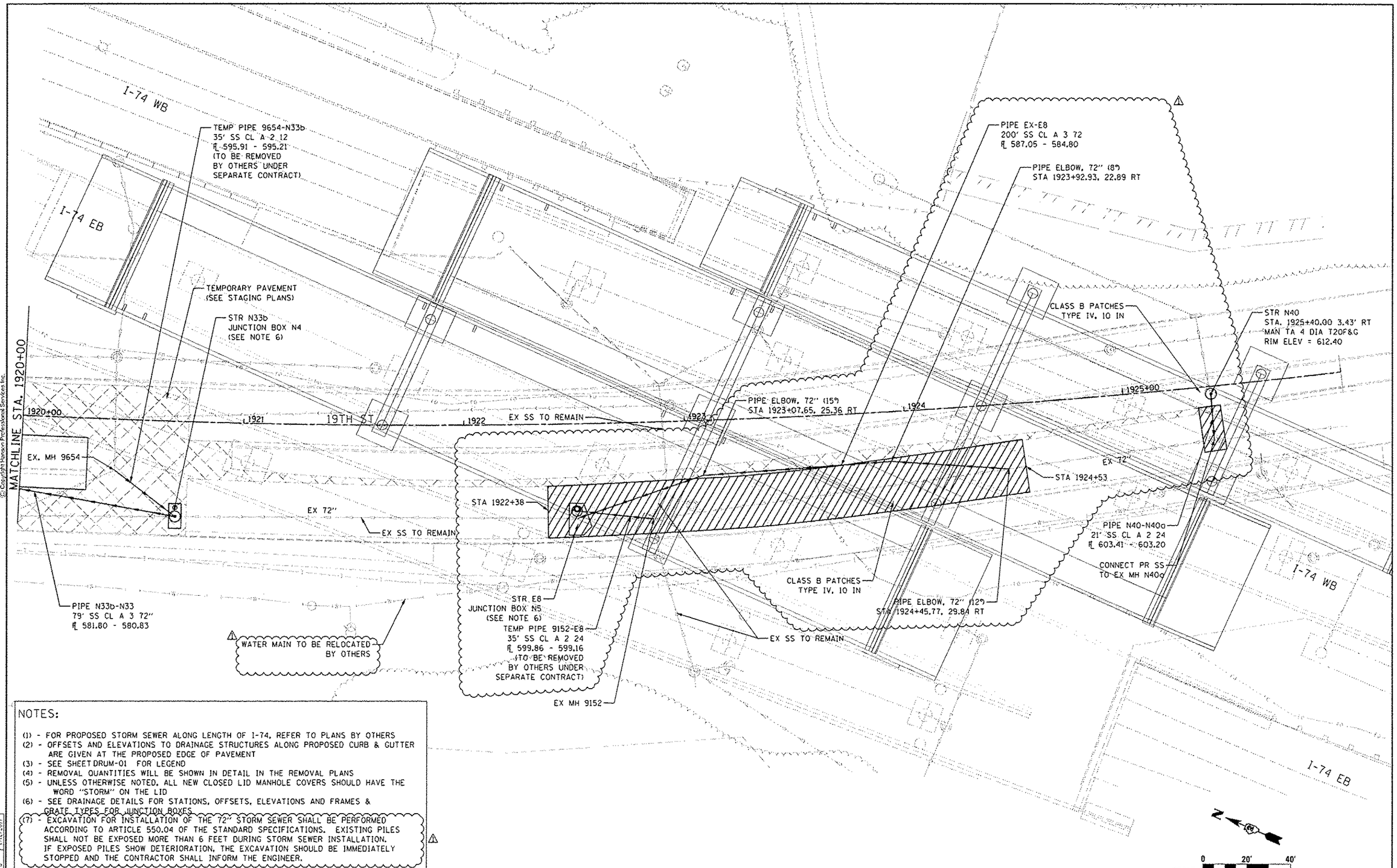

NOTES:

(1) - FOR PROPOSED STORM SEWER ALONG LENGTH OF I-74, REFER TO PLANS BY OTHERS
(2) - OFFSETS AND ELEVATIONS TO DRAINAGE STRUCTURES ALONG PROPOSED CURB & GUTTER ARE GIVEN AT THE PROPOSED EDGE OF PAVEMENT
(3) - SEE SHEET DRUM-01 FOR LEGEND
(4) - REMOVAL QUANTITIES WILL BE SHOWN IN DETAIL IN THE REMOVAL PLANS
(5) - UNLESS OTHERWISE NOTED, ALL NEW CLOSED LID MANHOLE COVERS SHOULD HAVE THE WORD "STORM" ON THE LID
(6) - SEE DRAINAGE DETAILS FOR STATIONS, OFFSETS, ELEVATIONS AND FRAMES & GRATE TYPES FOR JUNCTION BOXES
(7) - EXCAVATION FOR INSTALLATION OF THE 72" STORM SEWER SHALL BE PERFORMED ACCORDING TO ARTICLE 550.04 OF THE STANDARD SPECIFICATIONS. EXISTING PILES SHALL NOT BE EXPOSED MORE THAN 6 FEET DURING STORM SEWER INSTALLATION. IF EXPOSED PILES SHOW DETERIORATION, THE EXCAVATION SHOULD BE IMMEDIATELY STOPPED AND THE CONTRACTOR SHALL INFORM THE ENGINEER.

HANSON

LAYOUT	JJW	7/23/2014
DRAWN	JJW	11/19/2014
REVIEWED	MPB	1/12/2017

FILE NAME = D2CONAB-HPS-sht-drain16L.dgn	USER NAME = heatc01447	DESIGNED - JJW	REVISED - 05/16/17
		DRAWN - JJW	REVISED -
	PLOT SCALE = 1" = 20'	CHECKED - MPB	REVISED -
	PLOT DATE = 5/26/2017	DATE - 1/20/2017	REVISED -

STATE OF ILLINOIS
DEPARTMENT OF TRANSPORTATION

DRAINAGE AND UTILITIES SHEETS
PLAN
19TH STREET

SCALE: 1" = 20' | SHEET NO. OF SHEETS | STA. 1920+00 TO STA. 1926+00

F.A.I RTE.	SECTION	COUNTY	TOTAL SHEETS	SHEET NO.
74	(81-1)R & 81-1HVBR	ROCK ISLAND	1504	354

CONTRACT NO. 64C08

ILLINOIS FED. AID PROJECT

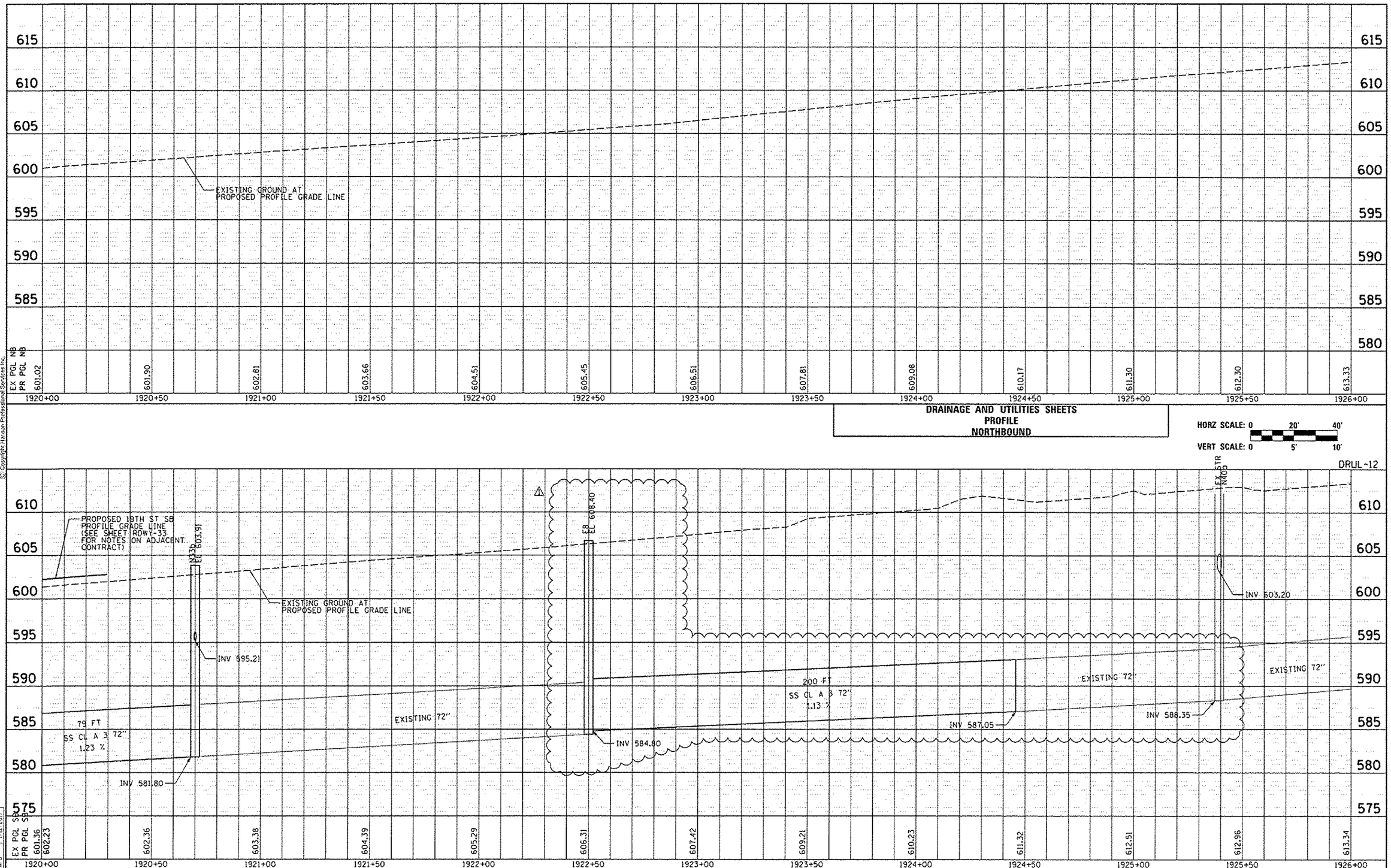

HANSON

LAYOUT	JJW	7/23/2014
DRAWN	JJW	11/19/2014
REVIEWED	MPB	1/12/2017

FILE NAME = 02C0NAB-HPS-sht-dreln36L.dgn

USER NAME = heato21447

PLOT SCALE = 1" = 20'

PLOT DATE = 5/26/2017

DESIGNED - JJW
DRAWN - JJW
CHECKED - MPB
DATE - 1/20/2017

REVISED - ⚠ 05/16/17
REVISED -
REVISED -
REVISED -

STATE OF ILLINOIS
DEPARTMENT OF TRANSPORTATION

DRAINAGE AND UTILITIES SHEETS
PROFILE
19TH STREET SOUTHBOUND

SCALE: 1" = 20' | SHEET NO. OF SHEETS | STA. 1920+00 TO STA. 1926+00

F.A.I RTE.	SECTION	COUNTY	TOTAL SHEETS	SHEET NO.
74	(81-1)R & 81-1HVBR	ROCK ISLAND	1504	355

CONTRACT NO. 64C08

ILLINOIS FED. AID PROJECT

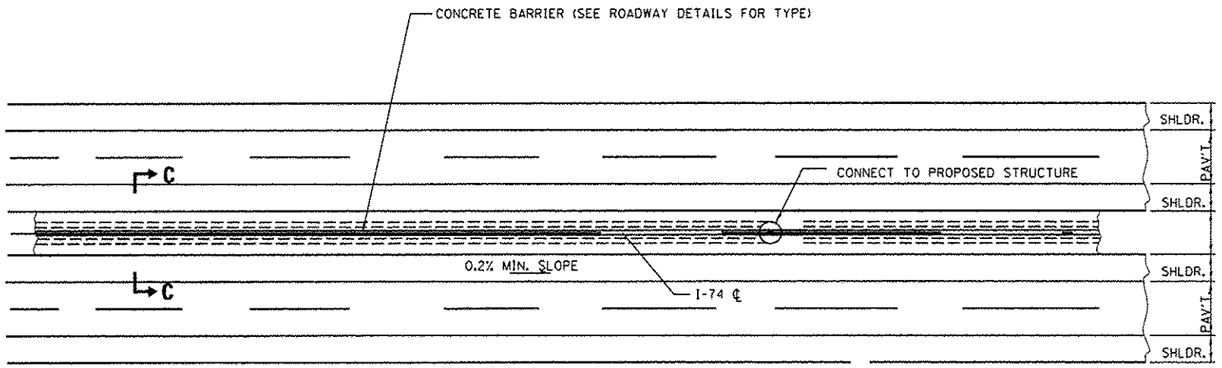

PLAN

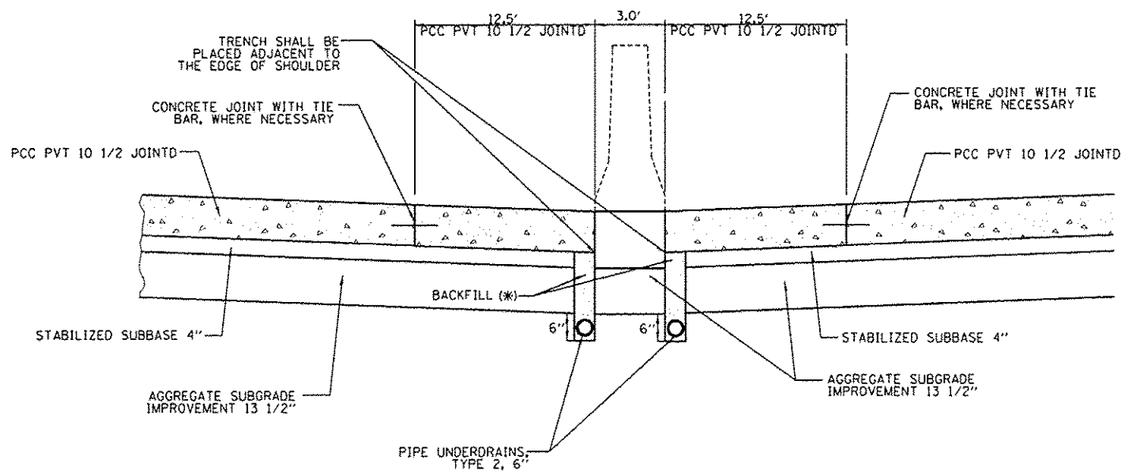

SECTION C-C
(AT MEDIAN CONCRETE BARRIER LOCATIONS)

LAYOUT	SPG	3/22/2012
DRAWN	SPG	4/16/2013
REVIEWED	JLM	5/25/2013

FILE NAME = D2CONAB-HPS-sht-drain23M.dgn	USER NAME = w03301457	DESIGNED - SPG	REVISED - 05/16/17	STATE OF ILLINOIS DEPARTMENT OF TRANSPORTATION
		DRAWN - SPG	REVISED -	
	PLOT SCALE = NTS	CHECKED - KMS	REVISED -	
	PLOT DATE = 4/26/2017	DATE - 1/20/2017	REVISED -	

DRAINAGE DETAILS
SUBSURFACE DRAIN DETAIL

SCALE: NTS | SHEET NO. OF SHEETS | STA. TO STA.

DET-33

F.A.I RTE.	SECTION	COUNTY	TOTAL SHEETS	SHEET NO.
74	(B1-1)R & B1-1HVBR	ROCK ISLAND	1504	391
		CONTRACT NO. 64C08		
		ILLINOIS FED. AID PROJECT		

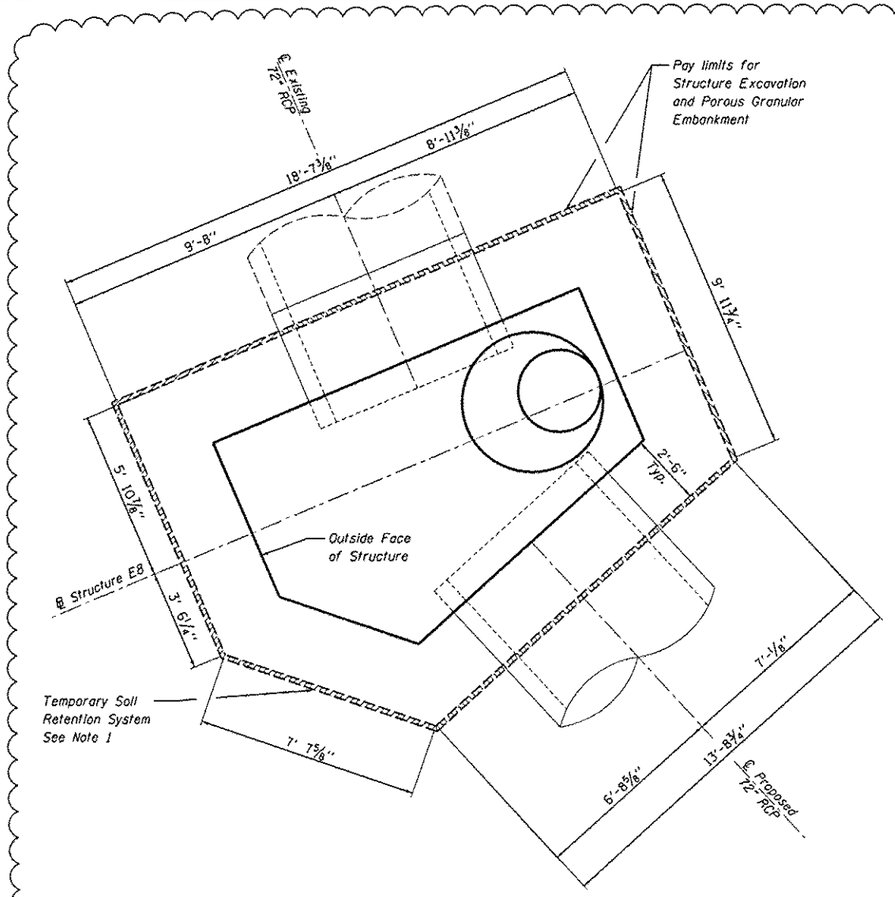

TEMPORARY SOIL RETENTION SYSTEM
(NOT TO SCALE)

WP 1 = 1922+50.20, 49.79 RT.
WP 2 = 1922+50.48, 38.18 RT.

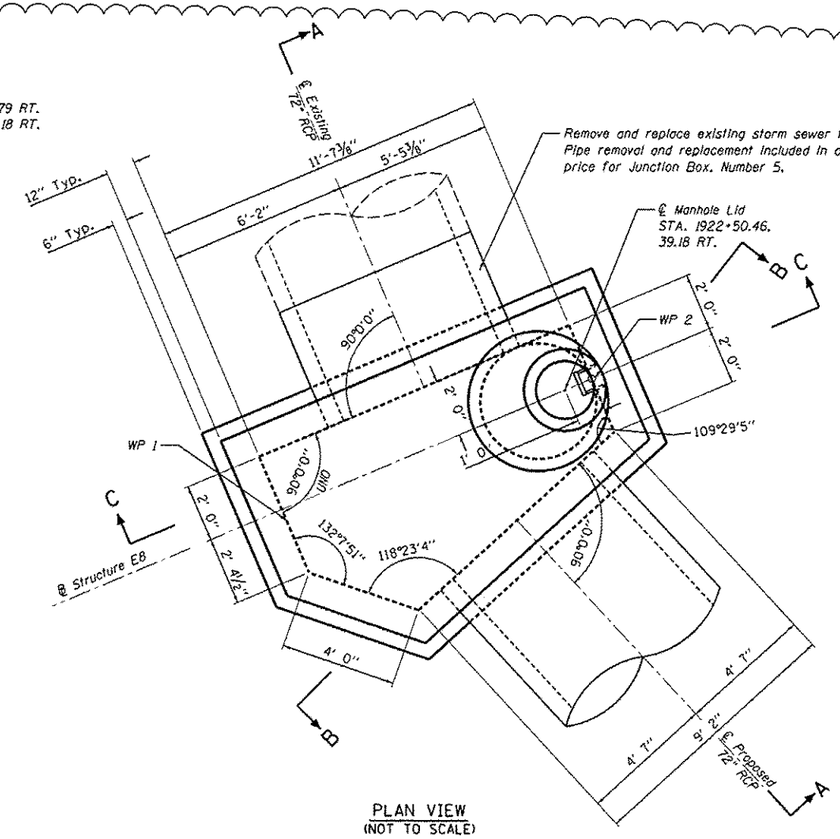

PLAN VIEW
(NOT TO SCALE)

GENERAL NOTES

1. A Cantilevered Sheet Piling Design does not appear feasible and additional members or other Retention Systems may be necessary. The Contractor shall submit a Temporary Soil Retention System design including plan details and calculations signed and sealed by a Illinois Licensed Structural Engineer. Cost of temporary soil retention system shall be included in "Junction Box, Number 5".
2. Junction Box shall be constructed in accordance with the Special Provision "Junction Box, Number 5" and the Standard Specifications.
3. The Contractor is to patch all lifting insert holes and place a minimum of one (1) inch of cover over the hardware of these devices on both top and bottom surfaces
4. All existing pipe surfaces to abut new concrete shall be cleaned and roughened. (Cost shall be included in "Junction Box, Number 5").
5. It shall be at all times the responsibility of the Contractor to prevent the flow of existing storm sewer from entering the construction site.
6. The cost of the adjustment of existing pipe and connection to the proposed structure is included in the cost of "Junction Box, Number 5".
7. The Concrete Junction Box as shown in the contract plans is designed as a single unit. Should the Contractor decide to construct the Junction Box in horizontal segments, the Contractor shall submit signed and sealed calculations and plan details of the segment connections from an Illinois Licensed Structural Engineer. This work is included in the cost of "Junction Box, Number 5".
8. A Cast-in-Place alternative may be used at the Contractor's option.
9. Any pipe connections to the proposed riser shall be in accordance with Section 602 of the Standard Specifications.

BILL OF MATERIALS

Pay Item No.	Item	Unit	Total
20700220	Porous Granular Embankment	Cu. Yd.	155
50200100	Structure Excavation	Cu. Yd.	204
X6029005	Junction Box, Number 5	L Sum	1

L Sum quantity for Junction Box, Number 5 includes structure E8.

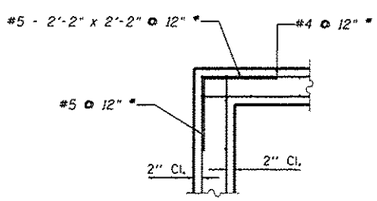

CORNER REINFORCEMENT DETAIL
(Typ. at top slab and wall corners)

* At wall corners, #6 @ 9" with a 2'-7" x 2'-7" bent bar.

DESIGN STRESSES
PRECAST UNITS

f'c = 4,500 psi
fy = 60,000 psi (Reinforcement)
fy = 50,000 psi (M270 Grade 50)

DESIGN SPECIFICATIONS:
AASTHO LRFD Bridge Specifications.
7TH Addition

HANSON

RLT	10-14-2016	
RLT	10-20-2016	
JJW/LMS	11-14-2016	

LAYOUT / DRAWN / REVISED

FILE NAME = D2CONAB-HPS-sht-drain33M.dgn
USER NAME = kelle21702
PLOT SCALE = NTS
PLOT DATE = 5/26/2017

DESIGNED - RLT
DRAWN - RLT
CHECKED - JJW/LMS
DATE - 1/20/2017

REVISED - 05/16/17
REVISED -
REVISED -
REVISED -

STATE OF ILLINOIS
DEPARTMENT OF TRANSPORTATION

DRAINAGE DETAILS
JUNCTION BOX, NUMBER 5
STRUCTURE E8

SCALE: NTS | SHEET NO. OF SHEETS | STA. TO STA.

DET-52

F.A.I. RTE.	SECTION	COUNTY	TOTAL SHEETS	SHEET NO.
74	(B1-1)R & B1-1HVBR	ROCK ISLAND	1504	410

CONTRACT NO. 64C08
ILLINOIS FED. AID PROJECT

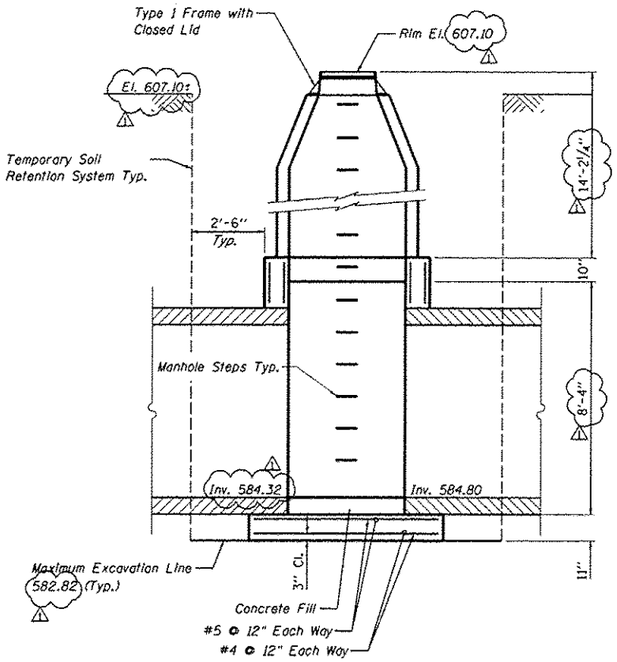

SECTION A-A

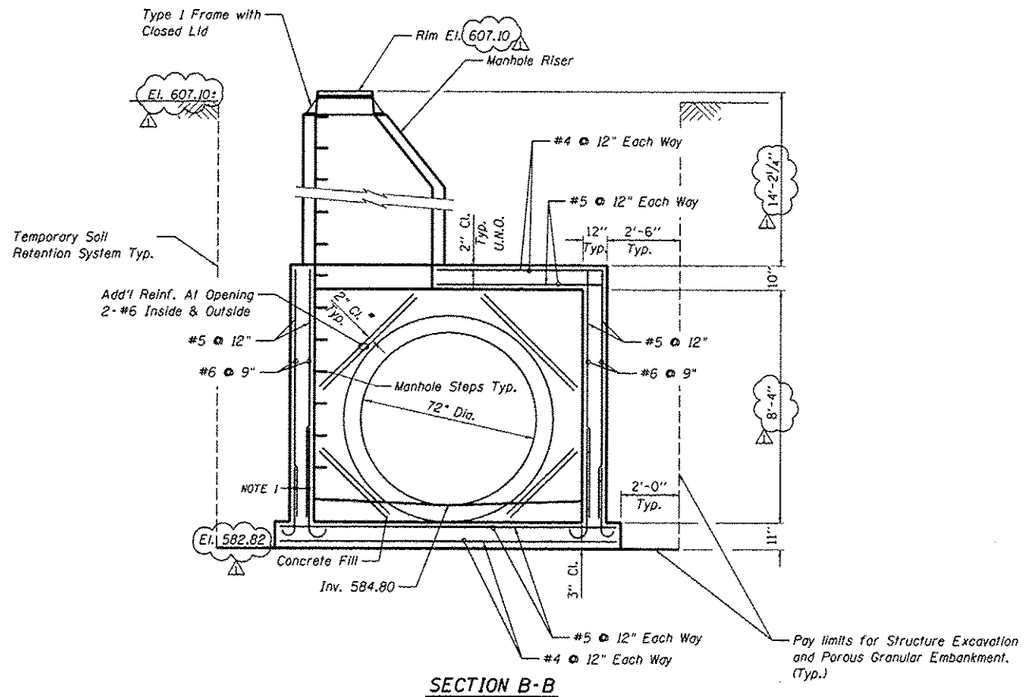

SECTION B-B

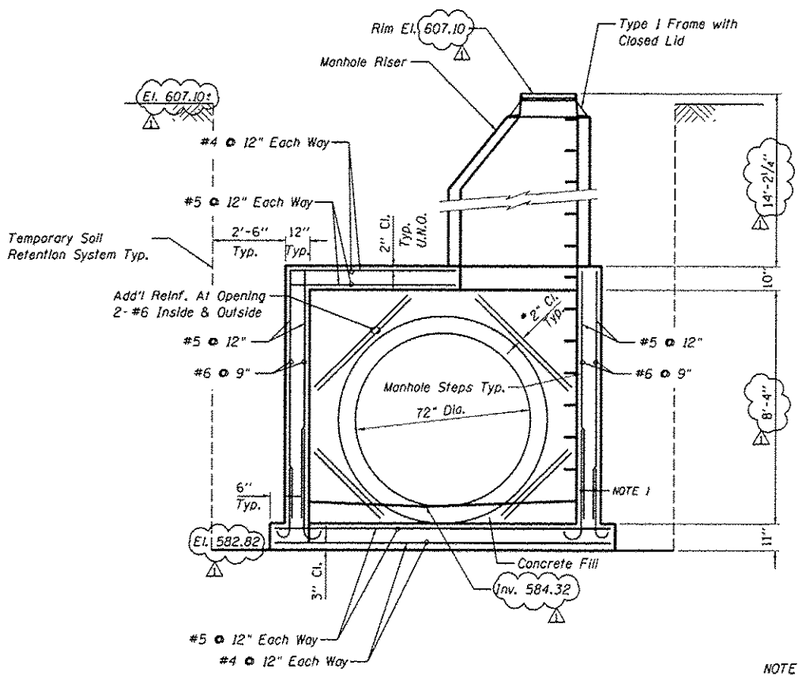

SECTION C-C

* If precast, place rebar 2" beyond the edge of existing block out

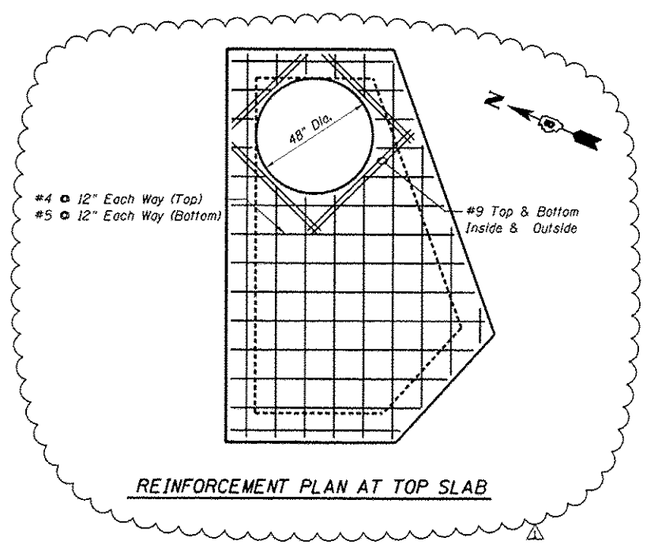

REINFORCEMENT PLAN AT TOP SLAB

NOTE 1 - Optional Bar Splices LAP #5 2'-2"

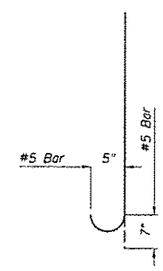

BAR DETAIL
Vertical Wall Reinforcement

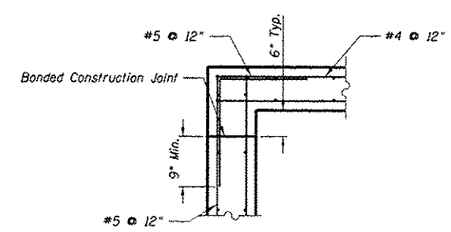

CORNER DETAIL FOR CAST-IN-PLACE WALLS AND TOP SLAB

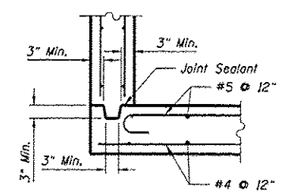

CORNER DETAIL FOR CAST-IN-PLACE SLAB AND PRECAST SINGLE UNIT WALLS

HANSON

LAYOUT	RLT	10/14/2016
DRAWN	RLT	10/20/2016
REVIEWED	JJW/LMS	11/14/2016

FILE NAME = 02CONAB-HPS-sht-drain33M.dgn

USER NAME = keile81702	DESIGNED - RLT	REVISED - △ 05/16/17	STATE OF ILLINOIS DEPARTMENT OF TRANSPORTATION
	DRAWN - RLT	REVISED -	
PLOT SCALE = NTS	CHECKED - JJW/LMS	REVISED -	
PLOT DATE = 5/26/2017	DATE - 1/20/2017	REVISED -	

DRAINAGE DETAILS
JUNCTION BOX, NUMBER 5
STRUCTURE E8

SCALE: NTS | SHEET NO. OF SHEETS | STA. TO STA.

DET-53

F.A.I RTE.	SECTION	COUNTY	TOTAL SHEETS	SHEET NO.
74	(81-1)R & 81-1HVBR	ROCK ISLAND	1504	411

CONTRACT NO. 64C08

ILLINOIS FED. AID PROJECT

REMOVED

HANSON

LAYOUT	RLT	10/14/2016
DRAWN	RLT	10/20/2016
REVIEWED	JJW/LMS	11/14/2016

DET-54

FILE NAME = D2CONAB-HPS-sht-drain34M.dgn	USER NAME = kelle01702	DESIGNED - RLT	REVISED - 1 05/16/17	STATE OF ILLINOIS DEPARTMENT OF TRANSPORTATION
		DRAWN - RLT	REVISED -	
	PLOT SCALE = N/S	CHECKED - JJW/LMS	REVISED -	
	PLOT DATE = 5/26/2017	DATE - 1/20/2017	REVISED -	

DRAINAGE DETAILS
JUNCTION BOX, NUMBER 5
STRUCTURE N36

SCALE: NTS | SHEET NO. OF SHEETS | STA. TO STA.

F.A.I. RTE.	SECTION	COUNTY	TOTAL SHEETS	SHEET NO.
74	(61-1)R & 81-1HVBR	ROCK ISLAND	1504	412
		CONTRACT NO. 64C08		
		ILLINOIS FED. AID PROJECT		

REMOVED

HANSON

LAYOUT		
DRAWN	RLT	10/14/2016
REVIEWED	RLT	10/20/2016
	JJW/LMS	11/14/2016

DET-S5

FILE NAME = 02CONAB-HPS-sht-drain34M.dgn	USER NAME = kwill01702	DESIGNED - RLT	REVISED - ⚠ 05/16/17	STATE OF ILLINOIS DEPARTMENT OF TRANSPORTATION	DRAINAGE DETAILS JUNCTION BOX, NUMBER 5 STRUCTURE N36	F.A.I RTE.	SECTION	COUNTY	TOTAL SHEETS	SHEET NO.
		DRAWN - RLT	REVISED -			74	(B1-1)R & B1-1)VBR	ROCK ISLAND	1504	413
	PLOT SCALE = NTS	CHECKED - JJW/LMS	REVISED -					CONTRACT NO. 64C08		
	PLOT DATE = 5/26/2017	DATE - 1/20/2017	REVISED -		SCALE: NTS SHEET NO. OF SHEETS STA. TO STA.			ILLINOIS FED. AID PROJECT		

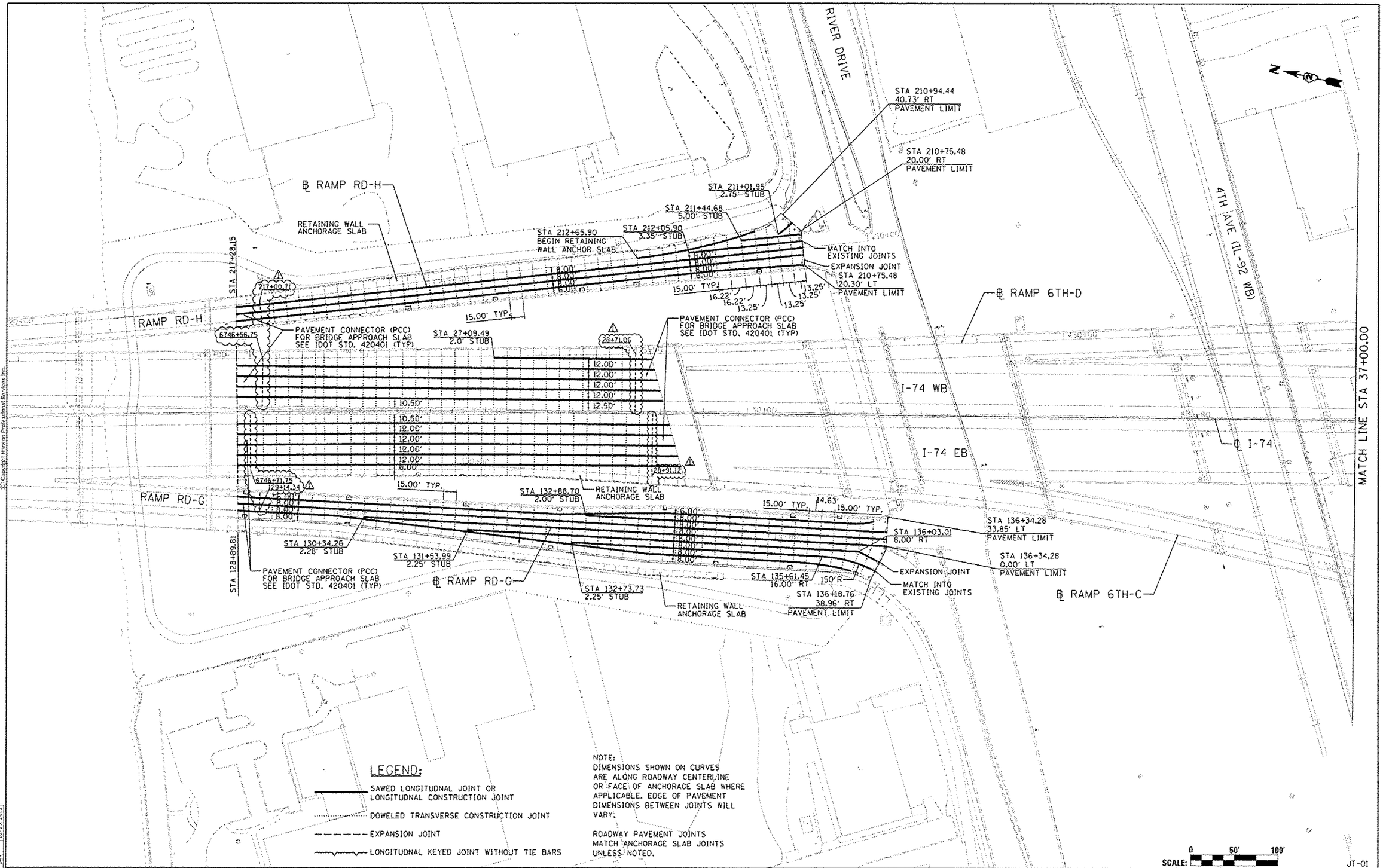

HANSON

CBP	10/9/2014	
CBP	10/16/2014	
DAW	10/23/2015	

FILE NAME = D2CONAB-HPS-sht-plan14M.dgn	USER NAME = pate28954	DESIGNED - CBP	REVISED - ⚠ 05/16/17	STATE OF ILLINOIS DEPARTMENT OF TRANSPORTATION	JOINTING PLANS RAMP RD-G AND RAMP RD-H
		DRAWN - CBP	REVISED -		
	PLOT SCALE = 1" = 50'	CHECKED - DAW	REVISED -		SCALE: 1" = 50' SHEET NO. OF SHEETS STA. TO STA.
	PLOT DATE = 5/12/2017	DATE - 1/20/2017	REVISED -		

F.A.I RTE.	SECTION	COUNTY	TOTAL SHEETS	SHEET NO.
74	(81-1)R & 81-1)HVBR	ROCK ISLAND	1504	456
		CONTRACT NO. 64C08		
		ILLINOIS FED. AID PROJECT		

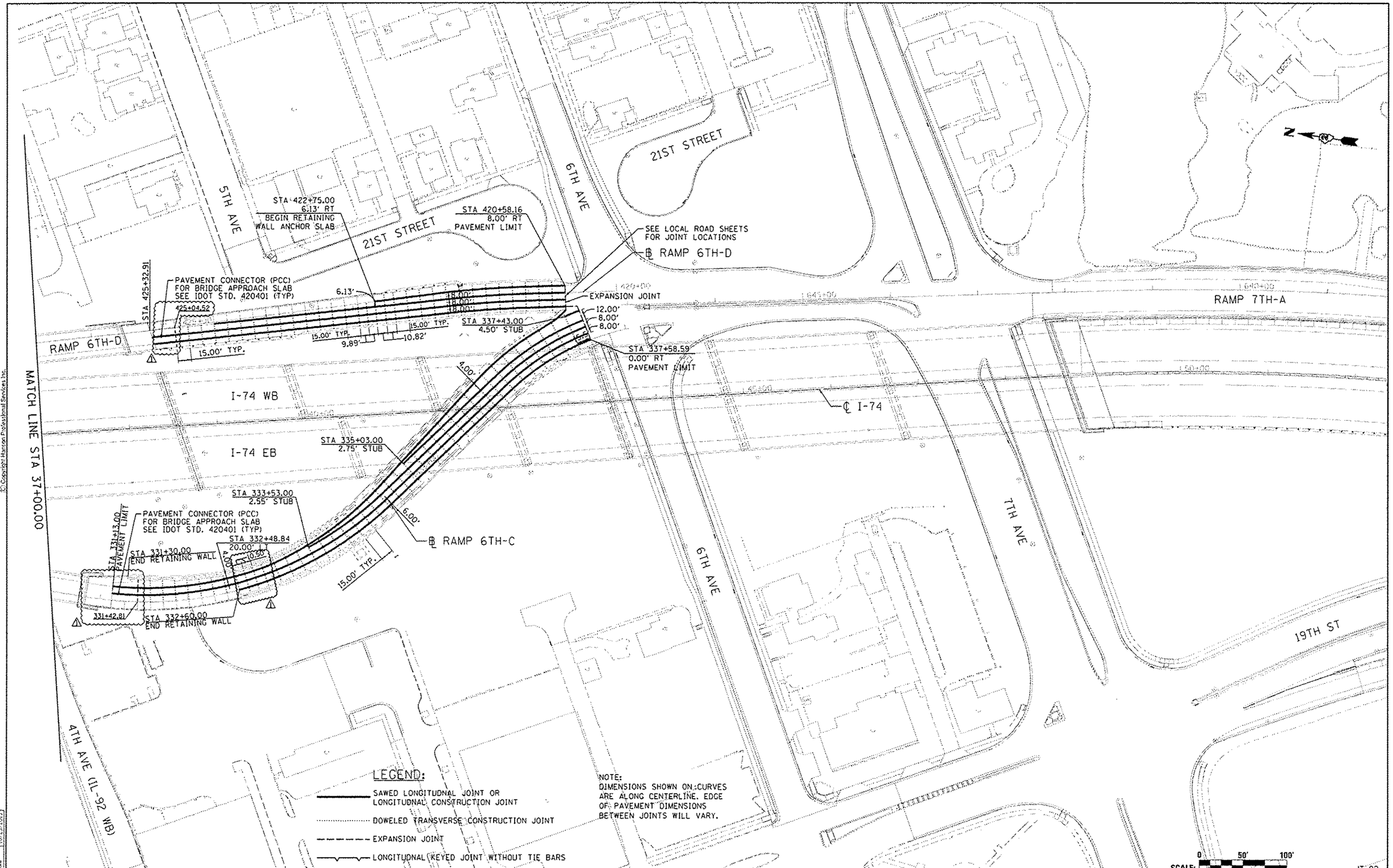

LEGEND:

- SAWED LONGITUDNAL JOINT OR LONGITUDNAL CONSTRUCTION JOINT
- DOWELED TRANSVERSE CONSTRUCTION JOINT
- EXPANSION JOINT
- LONGITUDNAL KEYED JOINT WITHOUT TIE BARS

NOTE:
DIMENSIONS SHOWN ON CURVES ARE ALONG CENTERLINE. EDGE OF PAVEMENT DIMENSIONS BETWEEN JOINTS WILL VARY.

SCALE: 0 50' 100'

JT-02

LAYOUT	CBP	10/9/2014	
DRAWN	CBP	10/16/2014	
REVISED	DAW	10/23/2015	

FILE NAME = D2CONAB-HPS-sht-plan15M.dgn	USER NAME = peh-e08954	DESIGNED - CBP	REVISED - 05/16/17
		DRAWN - CBP	REVISED -
	PLOT SCALE = 1" = 50'	CHECKED - DAW	REVISED -
	PLOT DATE = 5/12/2017	DATE - 1/20/2017	REVISED -

STATE OF ILLINOIS
DEPARTMENT OF TRANSPORTATION

JOINTING PLANS
RAMP 6TH-C AND RAMP 6TH-D

SCALE: 1" = 50' | SHEET NO. OF SHEETS | STA. TO STA.

F.A.I RTE.	SECTION	COUNTY	TOTAL SHEETS	SHEET NO.
74	(BI-1)R & BI-1HVBR	ROCK ISLAND	1504	457

CONTRACT NO. 64C08

ILLINOIS FED. AID PROJECT

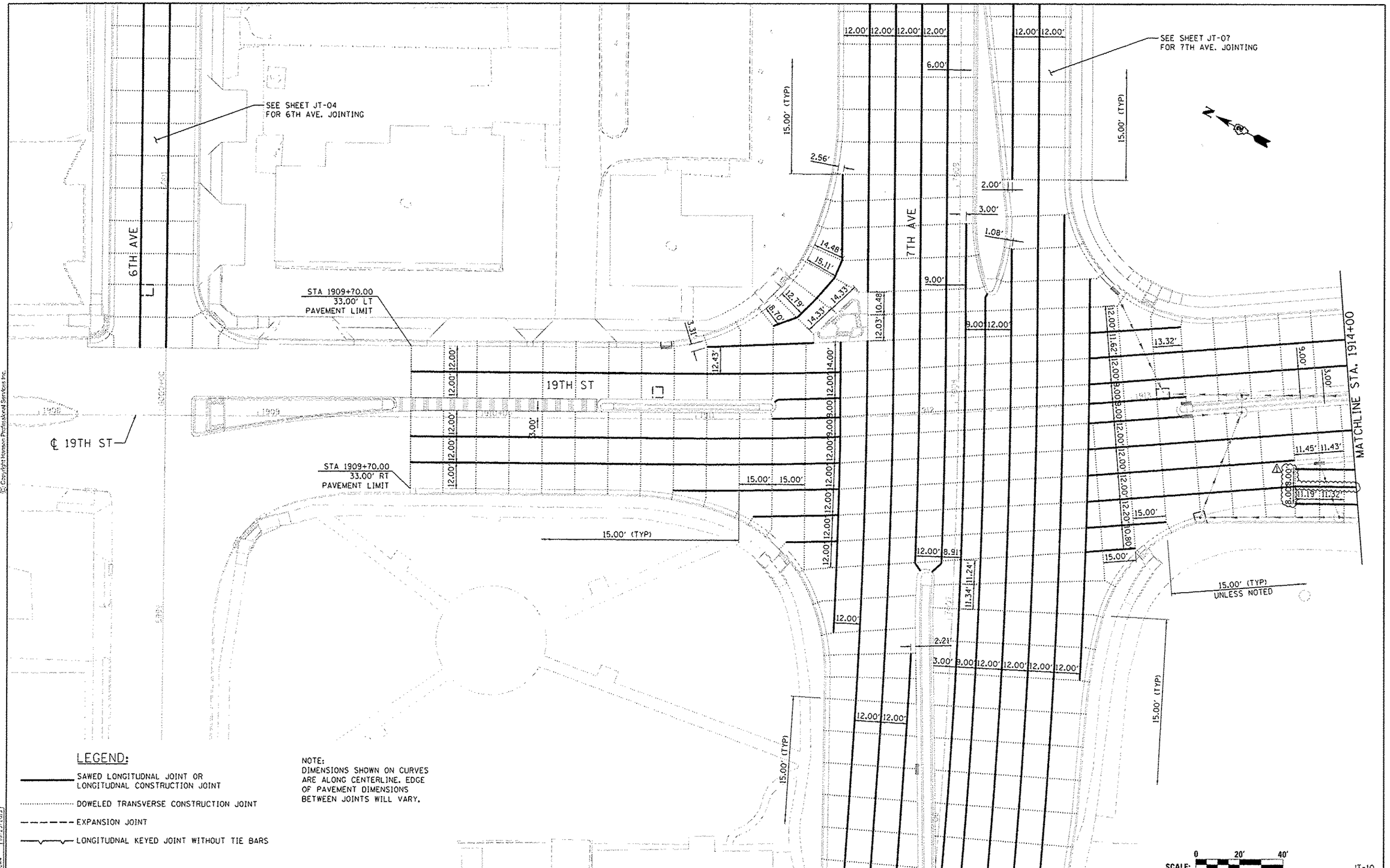

LEGEND:

- SAWED LONGITUDNAL JOINT OR LONGITUDNAL CONSTRUCTION JOINT
- DOWELED TRANSVERSE CONSTRUCTION JOINT
- EXPANSION JOINT
- LONGITUDNAL KEYED JOINT WITHOUT TIE BARS

NOTE:
DIMENSIONS SHOWN ON CURVES ARE ALONG CENTERLINE. EDGE OF PAVEMENT DIMENSIONS BETWEEN JOINTS WILL VARY.

SCALE: 0 20' 40'

JT-10

LAYOUT	CBP	10/9/2014			
DRAWN	CBP	10/16/2014			
REVIEWED	DAW	10/23/2015			

FILE NAME = D2CONAB-HPS-sht-plan14L.dgn	USER NAME = pate480454	DESIGNED - CBP	REVISED - ⚠ 05/16/17
		DRAWN - CBP	REVISED -
	PLOT SCALE = 1" = 20'	CHECKED - DAW	REVISED -
	PLOT DATE = 4/11/2017	DATE - 1/20/2017	REVISED -

STATE OF ILLINOIS
DEPARTMENT OF TRANSPORTATION

JOINTING PLANS
19TH STREET

SCALE: 1" = 20' | SHEET NO. OF SHEETS | STA. 1908+00 TO STA. 1914+00

F.A.I RTE.	SECTION	COUNTY	TOTAL SHEETS	SHEET NO.
74	(81-1)R & 81-1)HVBR	ROCK ISLAND	1504	465

CONTRACT NO. 64C08

ILLINOIS FED. AID PROJECT

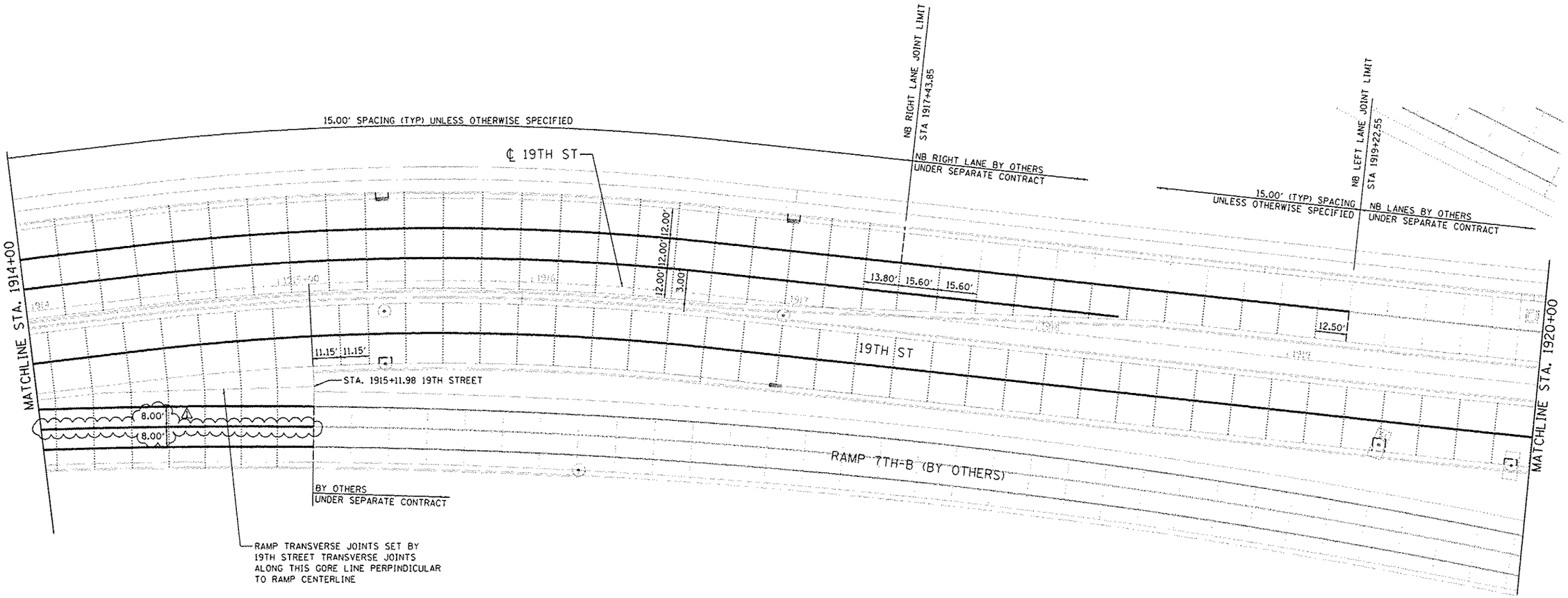

LEGEND:

- SAWED LONGITUDNAL JOINT OR LONGITUDNAL CONSTRUCTION JOINT
- DOWELED TRANSVERSE CONSTRUCTION JOINT
- EXPANSION JOINT
- LONGITUDNAL KEYED JOINT WITHOUT TIE BARS

NOTE:
DIMENSIONS SHOWN ON CURVES ARE ALONG CENTERLINE, EDGE OF PAVEMENT DIMENSIONS BETWEEN JOINTS WILL VARY.

SCALE: 0 20' 40'

JT-11

FILE NAME = 02CONN8-HPS-sht-plan15L.dgn	USER NAME = pesk-68954	DESIGNED - CBP	REVISED - ⚠ 05/16/17	STATE OF ILLINOIS DEPARTMENT OF TRANSPORTATION	JOINTING PLANS 19TH STREET
		DRAWN - CBP	REVISED -		
	PLOT SCALE = 1" : 20'	CHECKED - DAW	REVISED -		
	PLOT DATE = 4/11/2017	DATE - 1/20/2017	REVISED -		SCALE: 1" = 20' SHEET NO. OF SHEETS STA. 1914+00 TO STA. 1920+00

F.A.I RTE.	SECTION	COUNTY	TOTAL SHEETS	SHEET NO.
74	(BI-1)R & BI-1HVBR	ROCK ISLAND	1504	466
		CONTRACT NO. 64C08		
		ILLINOIS FED. AID PROJECT		

LAYOUT	CBP	7/22/2011
DRAWN	CBP	4/25/2013
REVIEWED	DAW	12/19/2016

HANSON

ROADWAY LIGHTING GENERAL NOTES

1. ELECTRICAL EQUIPMENT, RACEWAY, ETC. ARE SHOWN IN APPROXIMATE LOCATIONS ONLY. CONTRACTOR SHALL INSTALL ELECTRICAL EQUIPMENT, RACEWAYS, ETC. WHERE DIRECTED BY THE ENGINEER IN ORDER TO BEST SUIT JOB CONDITIONS.

2. ALL REPLACEMENT AND TEMPORARY WIRING SHALL BE EQUAL TO OR GREATER THAN THE EXISTING WIRE GAUGE.

3. NO SPLICING OF EXISTING-TO-NEW WIRING IS ALLOWED INSIDE ELECTRICAL DUCTS. ALL WIRING INTERCONNECTIONS SHALL BE INSTALLED IN ACCESSIBLE AREAS AND SHALL BE MADE WITH ILLINOIS DOT APPROVED CONNECTORS.

4. ALL LIQUID-TIGHT FLEXIBLE CONDUIT SHALL BE INCIDENTAL TO THE CONDUIT ATTACHED TO STRUCTURE OF THE SIZE SPECIFIED.

5. NO POLES TO BE INSTALLED IN THE FLOWLINE OF THE DITCH. POLE SETBACK SHALL BE ADJUSTED IF NECESSARY AS DIRECTED BY THE ENGINEER.

6. ELECTRIC SERVICE INSTALLATION SHALL INCLUDE ALL CONDUIT AND CABLE REQUIRED BETWEEN THE UTILITY SERVICE AND THE LIGHTING CONTROLLER.

7. ALL CONDUIT UNDER ROADWAYS SHALL BE PVC SCHEDULE 80.

8. THE GROUND CONDUCTOR SHALL HAVE NO SPLICE OR KINCKS BELOW GRADE. IT SHALL BE SOLIDLY CONNECTED TO THE GROUNDING LUG OF EACH POLE, JUNCTION BOX, AND TO THE GROUND ROD AT THE SERVICE INSTALLATION.

   IN AREAS WHERE MULTIPLE CIRCUIT CONDUCTORS SHARE A COMMON CONDUIT, A COMMON EQUIPMENT GROUND SHALL BE UTILIZED.

9. THE CONTRACTOR SHALL PROVIDE A ¼" POLY PULL-LINE THROUGH EACH PVC CONDUIT IN WHICH NO CONDUCTORS ARE PLACED IN THIS CONTRACT. THIS WORK SHALL BE CONSIDERED INCLUDED IN THE PRICE FOR THE CONDUIT SPECIFIED.

10. JUNCTION BOXES OF "SLIGHTLY" LARGER SIZE THAN THOSE SPECIFIED ON THE PLANS MAY BE USED WHEN APPROVED BY ENGINEER AT NO ADDITIONAL COST TO THE CONTRACT.

11. EXISTING AND/OR TEMPORARY LIGHTING UNITS SHALL NOT BE REMOVED UNTIL NEW LIGHTING SYSTEM IS COMPLETELY INSTALLED AND FULLY OPERATIONAL TO THE SATISFACTION OF THE ENGINEER.

12. CONTRACTOR SHALL PROVIDE STAINLESS STEEL SCREEN UNDERNEATH THE ALUMINUM SKIRT OF THE BREAKAWAY COUPLINGS. THE COST OF THE SCREEN SHALL BE INCLUDED IN THE COST OF THE COUPLINGS. SKIRT SHALL BE PAINTED BLACK TO MATCH LIGHT POLES.

13. REMOVAL AND DISPOSAL OF ALL LIGHT POLES AND UNDERPASS LUMINAIRES ATTACHED TO BRIDGE STRUCTURES SHALL BE INCLUDED IN THE COST OF THE ASSOCIATED "REMOVAL OF EXISTING STRUCTURES" PAY ITEM. PLEASE SEE STRUCTURAL REMOVAL PLANS DEMOLITION PLAN FOR ADDITIONAL INFORMATION.

14. THE CONTRACTOR IS RESPONSIBLE FOR LOCATING ALL EXISTING STATE OWNED LIGHTING AND/OR TRAFFIC SIGNAL UTILITIES WITHIN THE LIMITS OF THE CONTRACT.

15. EXPANSION/DEFLECTION COUPLINGS SHALL BE INSTALLED IN ALL LOCATIONS BETWEEN STRUCTURES, AT EXPANSION JOINTS, AND WHERE NECESSARY TO CONTROL MOVEMENT THAT WOULD DAMAGE THE CONDUIT. THE COST OF EXPANSION/DEFLECTION COUPLINGS SHALL BE INCLUDED IN THE COST OF THE ASSOCIATED CONDUIT AS CALLED OUT ON THE PLANS.

ESTIMATED PROJECT QUANTITIES

PAY ITEM NO.	DESCRIPTION	UNIT	TOTAL QUANTITY
80400100	ELECTRIC SERVICE INSTALLATION	EACH	1
81028320	UNDERGROUND CONDUIT, PVC, 1" DIA.	FOOT	86
81028350	UNDERGROUND CONDUIT, PVC, 2" DIA.	FOOT	5,133 △1
81028360	UNDERGROUND CONDUIT, PVC, 2 1/2" DIA.	FOOT	1,132
81100300	CONDUIT ATTACHED TO STRUCTURE, 1" DIA., GALVANIZED STEEL	FOOT	2,292
81100600	CONDUIT ATTACHED TO STRUCTURE, 2" DIA., GALVANIZED STEEL	FOOT	3,845
81200210	CONDUIT EMBEDDED IN STRUCTURE, 1" DIA. PVC	FOOT	2,646
81200230	CONDUIT EMBEDDED IN STRUCTURE, 2" DIA. PVC	FOOT	8,191
81300220	JUNCTION BOX, STAINLESS STEEL, ATTACHED TO STRUCTURE, 6"x6"x4"	EACH	90
81300530	JUNCTION BOX, STAINLESS STEEL, ATTACHED TO STRUCTURE, 12"x10"x6"	EACH	50
81300550	JUNCTION BOX, STAINLESS STEEL, ATTACHED TO STRUCTURE, 12"x12"x6"	EACH	6
81301290	JUNCTION BOX, STAINLESS STEEL, EMBEDDED IN STRUCTURE, 12"x12"x6"	EACH	4
81400100	HANDHOLE	EACH	9 △1
81702110	ELECTRIC CABLE IN CONDUIT, 600V (XLP-TYPE USE) 1/C NO. 10	FOOT	6,497
81702120	ELECTRIC CABLE IN CONDUIT, 600V (XLP-TYPE USE) 1/C NO. 8	FOOT	74,255
81702130	ELECTRIC CABLE IN CONDUIT, 600V (XLP-TYPE USE) 1/C NO. 6	FOOT	22,605
82500335	LIGHTING CONTROLLER, PEDESTAL MOUNTED, 240VOLT, 100AMP	EACH	1
83600200	LIGHT POLE FOUNDATION, 24" DIAMETER	FOOT	10
83600300	LIGHT POLE FOUNDATION, 30" DIAMETER	FOOT	126
83800505	BREAKAWAY DEVICE, COUPLING WITH ALUMINUM SKIRT	EACH	60
84200600	REMOVAL OF LIGHTING UNIT, NO SALVAGE	EACH	38
84200804	REMOVAL OF POLE FOUNDATION	EACH	36
84400105	RELOCATE EXISTING LIGHTING UNIT	EACH	6
84500110	REMOVAL OF LIGHTING CONTROLLER	EACH	4
84500120	REMOVAL OF ELECTRIC SERVICE INSTALLATION	EACH	4
84500130	REMOVAL OF LIGHTING CONTROLLER FOUNDATION	EACH	3
87900200	DRILL EXISTING HANDHOLE	EACH	1
X0326357	ROADWAY LIGHTING MODIFICATIONS	L SUM	1
X0327006	ROADWAY LIGHT POLE, INSTALL ONLY	EACH	41
X1400128	REMOVE AND REPLACE EXISTING CIRCUIT BREAKER WITH 40 AMP, 2-POLE	EACH	2
X8110454	CONDUIT ATTACHED TO STRUCTURE, 1" DIA., STAINLESS STEEL	FOOT	10
X8110458	CONDUIT ATTACHED TO STRUCTURE, 2" DIA., STAINLESS STEEL	FOOT	80
X8360120	LIGHT POLE FOUNDATION, SPECIAL	EACH	1
X8360310	LIGHT POLE FOUNDATION, 30" DIAMETER, SPECIAL	FOOT	9
X8410102	TEMPORARY LIGHTING SYSTEM	L SUM	1
*2000324	ROADWAY LUMINAIRE, SPECIAL (INSTALL ONLY)	EACH	59
*2000325	AESTHETIC LUMINAIRE, (INSTALL ONLY)	EACH	71
*2000326	UNDERPASS LUMINAIRE, (INSTALL ONLY)	EACH	25

LIGHTING LEGEND

- PROPOSED ELECTRIC SERVICE INSTALLATION
- PROPOSED LIGHTING CONTROLLER, 240V, 100A (UNLESS OTHERWISE NOTED)
- PROPOSED HANDHOLE
- PROPOSED LED STREET LIGHT, 50 FT MOUNTING HEIGHT, 14 FT MAST ARM (UNLESS OTHERWISE NOTED)
- PROPOSED LED STREET LIGHT, 48.5 FT MOUNTING HEIGHT, TWIN 14 FT MAST ARMS (UNLESS OTHERWISE NOTED)
- PROPOSED BRIDGE MOUNTED LED STREET LIGHT, 48.5 FT MOUNTING HEIGHT, 14 FT MAST ARM (UNLESS OTHERWISE STATED)
- PROPOSED BRIDGE MOUNTED LED STREET LIGHT, 48.5 FT MOUNTING HEIGHT, TWIN 14 FT MAST ARMS, (UNLESS OTHERWISE NOTED)
- PROPOSED TRAFFIC SIGNAL / STREET LIGHT COMBINATION
- PROPOSED UNDERPASS LUMINAIRE, LED, VERY LOW WATTAGE
- PROPOSED UNDERGROUND CONDUIT, TYPE AND SIZE AS NOTED
- PROPOSED CONDUIT ATTACHED TO STRUCTURE, SIZE AS NOTED
- PROPOSED CONDUIT EMBEDDED IN STRUCTURE, SIZE AS NOTED
- EXISTING LIGHTING CONTROLLER TO REMAIN
- EXISTING LIGHTING UNIT TO REMAIN
- EXISTING LIGHT TO BE MODIFIED (MOD)
- EXISTING LIGHT TO BE REMOVED (REM)
- EXISTING LIGHT TO BE RELOCATED (R)
- EXISTING LIGHTING CONTROLLER TO BE REMOVED (R)
- EXISTING ELECTRIC SERVICE INSTALLATION TO BE REMOVED (R)
- TEMPORARY LIGHTING UNIT, AS NOTED ON PLANS
- AC — TEMPORARY AERIAL CABLE, AS NOTED ON PLANS

3"-72'-T — CONDUIT CALLOUT
- T — INSTALLATION METHOD (UNDERGROUND UNLESS OTHERWISE SPECIFIED, EMBEDDED IN STRUCTURE OR ATTACHED TO STRUCTURE)
- 72' — CONDUIT LENGTH
- 3" — CONDUIT DIAMETER

1-A-01 — LIGHT POLE DESIGNATION
- 01 — POLE NUMBER
- A — CIRCUIT
- 1 — CONTROL CABINET

benesch
engineers · scientists · planners
Alfred Benesch & Company
205 North Michigan Avenue, Suite 2400
Chicago, Illinois 60601
312-565-0450 Job No. 10064

FILE NAME = D2CONAB-AB-ahs-light400.dgn	USER NAME =	DESIGNED - GHT	REVISED - △1 05/16/2017
		DRAWN - JLW	REVISED -
	PLOT SCALE = NO SCALE	CHECKED - GRR	REVISED -
	PLOT DATE = 5/18/2017	DATE - 2/5/2016	REVISED -

STATE OF ILLINOIS
DEPARTMENT OF TRANSPORTATION

LIGHTING QUANTITIES & GENERAL NOTES

SCALE: NO SCALE | SHEET NO. 1 OF 29 SHEETS | STA. TO STA.

F.A.I RTE.	SECTION	COUNTY	TOTAL SHEETS	SHEET NO.
74	(81-1)R & (81-1)HVBR	ROCK ISLAND	1504	497
		CONTRACT NO. 64C08		
		ILLINOIS FED. AID PROJECT		

LAYOUT | DRAWN | REVIEWED

EXISTING ELECTRIC SERVICE INSTALLATION, 120/240V, 200 A, 1 PHASE, 3 WIRE
EXISTING IDOT CONTROLLER 1, 120/240V, 1 PHASE, 200 A (SEE NOTE 5)
PROPOSED HANDHOLE AND (2) 5" PVC CONDUITS TO CONNECT TO EXISTING SPARE STUB-OUTS FROM CONTROLLER. 5" PVC CONDUITS SHALL BE INCLUDED IN THE COST OF THE HANDHOLE.
JUNCTION BOX, 12"x12"x6", ATTACHED TO STRUCTURE AND CONDUIT ATTACHED TO STRUCTURE, 2" DIA STAINLESS STEEL - 10'
SEE NOTE 4
211+54.00
38.00' RT
215+30.00
RETAINING WALL
PR RAMP RD-H
436+45.00
BARRIER WALL
433+30.00
PARAPET WALL
PR I-74 (WB)
28+10.00
BARRIER WALL
SEE NOTE 2
SEE NOTE 1
PR I-74 (EB)
30+60.00
PARAPET WALL
320+65.00
RETAINING WALL
323+97.50
PARAPET WALL
PR RAMP RD-G
132+15.00
RETAINING WALL
JUNCTION BOX, 12"x12"x6", ATTACHED TO STRUCTURE AND CONDUIT ATTACHED TO STRUCTURE, 2" DIA STAINLESS STEEL - 10'
135+15.00
50.94' RT
SEE NOTE 3
IDENTITY ELEMENT
HANDHOLE
(3) 2½"-78'
(4) 2½"-200'-P
JUNCTION BOX, EMBEDDED IN STRUCTURE, 12"x12"x6"
430+05.00
PARAPET WALL
33+44.00
PARAPET WALL
JUNCTION BOX, EMBEDDED IN STRUCTURE, 12"x12"x6"
327+25.00
PARAPET WALL
JUNCTION BOX, EMBEDDED IN STRUCTURE, 12"x12"x6"
426+81.00
PARAPET WALL
PR RAMP 6TH-D
PR I-74 WB
36+22.00
PARAPET WALL
PR I-74 EB
℄ PR I-74
38+97.00
PARAPET WALL
PR RAMP 6TH-C
331+08.00
PARAPET WALL
EX I-74 RAMPS
JUNCTION BOX, 12"x12"x6", ATTACHED TO STRUCTURE AND CONDUIT ATTACHED TO STRUCTURE, 2" DIA STAINLESS STEEL - 10'
423+65.00
RETAINING WALL
PR 21ST ST
HANDHOLE (TO RISER FOR UNDERDECK LIGHTING)
IDENTITY ELEMENT
334+22.00
16.00' RT
RIVER DRIVE
IL 92 / 4TH AVE
5TH AVE
MATCH LINE STA 26+00.00
MATCH LINE STA 41+00.00
MATCH LINE

NOTES:

1. CONDUIT EMBEDDED IN DOUBLE FACE MEDIAN BARRIER WALL SHALL TRANSITION INTO WB BARRIER WALL.
2. LIGHT POLE FOUNDATION, SPECIAL. SEE MEDIAN LIGHT POLE FOUNDATION, SPECIAL DETAIL.
3. POLE FOUNDATION SHALL BE 24" DIAMETER.
4. PROVIDE AND INSTALL BREAKAWAY COUPLINGS WITH ALUMINUM SKIRT.
5. CONTRACTOR SHALL REMOVE AND REPLACE (2) EXISTING 20 AMP, 2-POLE CIRCUIT BREAKERS WITH 40 AMP, 2-POLE CIRCUIT BREAKERS FOR PROPOSED CIRCUITS C & D.

SCALE: 0 50' 100'

benesch
engineers · scientists · planners
Alfred Benesch & Company
205 North Michigan Avenue, Suite 2400
Chicago, Illinois 60601
312-565-0450 Job No. 10064

FILE NAME = D2CONAB-AB-sht-light400.dgn	USER NAME =	DESIGNED - GHT	REVISED - 05/16/2017
		DRAWN - JLW	REVISED -
	PLOT SCALE = AS NOTED	CHECKED - GRR	REVISED -
	PLOT DATE = 5/10/2017	DATE - 2/5/2016	REVISED -

LAYOUT
DRAWN
REVIEWED

STATE OF ILLINOIS
DEPARTMENT OF TRANSPORTATION

PROPOSED LIGHTING PLAN
MAINLINE & RAMPS

SCALE: AS NOTED | SHEET NO. 6 OF 29 SHEETS | STA. 26+00 TO STA. 41+00

F.A.I RTE.	SECTION	COUNTY	TOTAL SHEETS	SHEET NO.
74	(81-1)R & 81-1)HVBR	ROCK ISLAND	1504	502
		CONTRACT NO. 64C08		
		ILLINOIS FED. AID PROJECT		

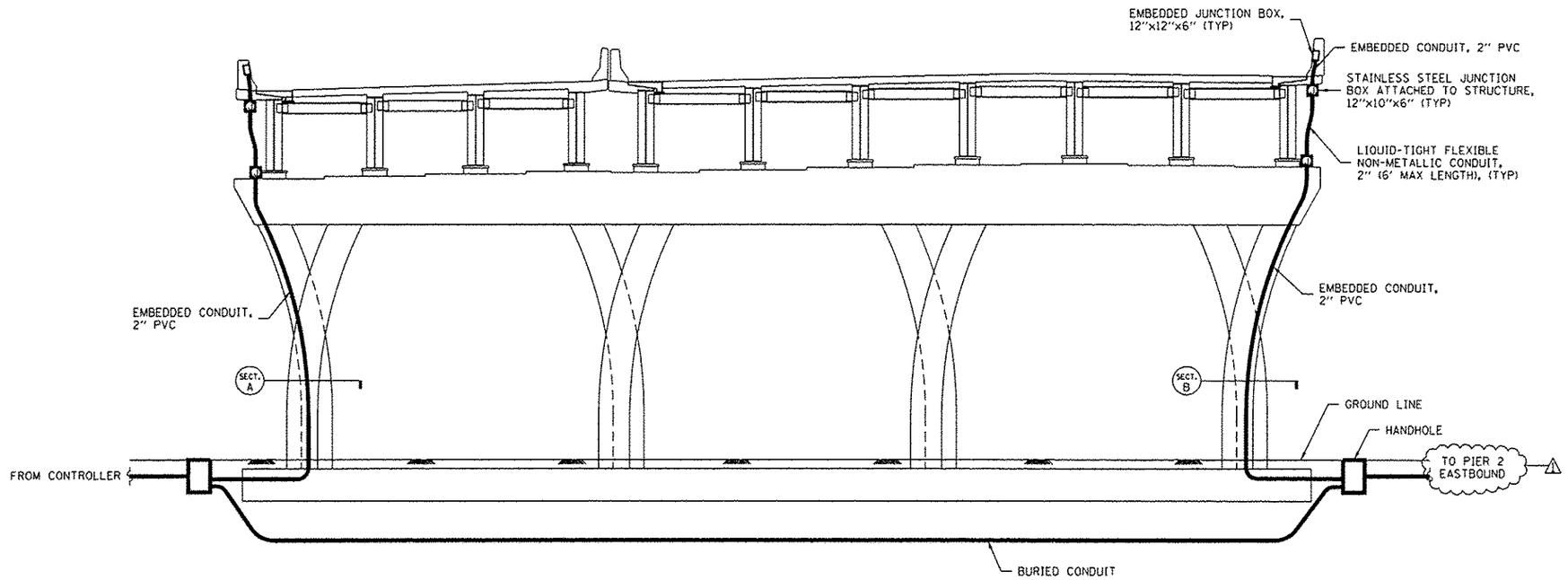

PIER 2 (WESTBOUND) TRANSVERSE ELEVATION (LOOKING SOUTH)

NO SCALE

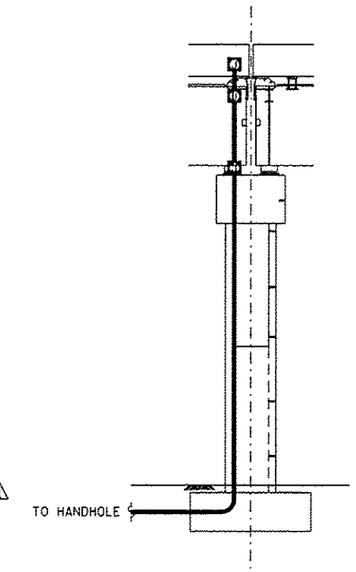

PIER 2 LONGITUDINAL ELEVATION

NO SCALE

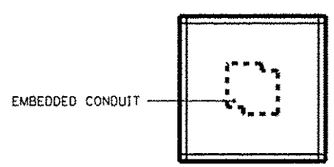

SECTION A

NO SCALE

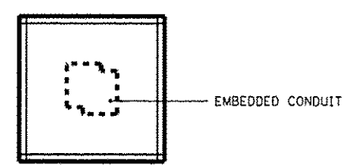

SECTION B

NO SCALE

NOTE:

1. PIER 2 EASTBOUND IS SIMILAR EXCEPT CONDUIT RISER UP PIER AND JUNCTION BOXES ARE ONLY AT WESTERN EDGE FOR RAMP 6TH-C.

benesch
engineers · scientists · planners
Alfred Benesch & Company
205 North Michigan Avenue, Suite 2400
Chicago, Illinois 60601
312-565-0450 Job No. 10064

FILE NAME = D2CONAB-AB-sht-light48a.dgn	USER NAME =	DESIGNED - GHT	REVISED - ⚠ 05/16/2017	STATE OF ILLINOIS DEPARTMENT OF TRANSPORTATION	MAINLINE CONDUIT ROUTING DETAILS PIER 2	F.A.I RTE.	SECTION	COUNTY	TOTAL SHEETS	SHEET NO.
		DRAWN - JLW	REVISED -			74	(81-1)R & 81-1)HVBR	ROCK ISLAND	1504	516
	PLOT SCALE = NO SCALE	CHECKED - GRR	REVISED -					CONTRACT NO. 64C08		
	PLOT DATE = 5/18/2017	DATE - 2/5/2016	REVISED -		SCALE: NO SCALE / SHEET NO. 20 OF 29 SHEETS / STA. / TO STA.		ILLINOIS FED. AID PROJECT			

LAYOUT / DRAWN / REVIEWED

SIGNING PLANS BILL OF MATERIALS

PAY ITEM	DESCRIPTION	UNIT	TOTAL QUANTITY
50800205	REINF BARS, EPOXY CTD	POUND	320
72000100	SIGN PANEL - TYPE 1	SQ FT	652
72000200	SIGN PANEL - TYPE 2	SQ FT	260
72000300	SIGN PANEL - TYPE 3	SQ FT	1,877
72400100	REMOVE SIGN PANEL ASSEMBLY - TYPE A	EACH	58
72400200	REMOVE SIGN PANEL ASSEMBLY - TYPE B	EACH	10
72400310	REMOVE SIGN PANEL TYPE 1	SQ FT	33
72400320	REMOVE SIGN PANEL TYPE 2	SQ FT	58
72400330	REMOVE SIGN PANEL TYPE 3	SQ FT	168
72400500	RELOCATE SIGN PANEL ASSEMBLY - TYPE A	EACH	2
72600100	MILE POST MARKER ASSEMBLY	EACH	2
72700100	STRUCTURAL STEEL SIGN SUPPORT - BREAKAWAY	POUND	1,275
72800100	TELESCOPING STEEL SIGN SUPPORT	FOOT	606
73000100	WOOD SIGN SUPPORT	FOOT	241
73100100	BASE FOR TELESCOPING STEEL SIGN SUPPORT	EACH	10
73400100	CONCRETE FOUNDATIONS	CU YD	2.8
73600100	REMOVE OVERHEAD SIGN STRUCTURE - SPAN	EACH	4
73700100	REMOVE GROUND MOUNTED SIGN SUPPORT	EACH	4
73700200	REMOVE CONCRETE FOUNDATION - GROUND MOUNT	EACH	4
73700300	REMOVE CONCRETE FOUNDATION - OVERHEAD	EACH	8
X7260100	MILE POST MARKER ASSEMBLY (SPECIAL)	EACH	2
#2000319	PARAPET MOUNTED SIGN SUPPORT ASSEMBLY	EACH	5

NOTE:

THE SIZE, DIMENSIONS AND QUANTITIES OF CONCRETE FOUNDATIONS AND POSTS FOR THE SIGNS ON STEEL BREAKAWAY POSTS IS FOR BIDDING ESTIMATES ONLY. THE EXACT DESIGN SHALL BE DETERMINED AFTER THE FINAL GRADING HAS BEEN COMPLETED. ONCE FINAL GRADING HAS BEEN COMPLETED, THE CONTRACTOR SHALL CONTACT KRISTIE NYDEREK (815) 284-5469 OR KURT GLAZIER (815) 284-5478. THE STATE WILL HAVE 3 WEEKS TO PROVIDE THE SIGN SUPPORT DESIGNS TO THE CONTRACTOR.

LAYOUT	MTH	5/15/2015
DRAWN	MTH	11/3/2015
REVIEWED	CDM	12/23/2016

SGN-01

FILE NAME = D2CONA8-HPS-sht-sign001.dgn	USER NAME = heatc01447	DESIGNED - MTH	REVISED - 5/16/17	STATE OF ILLINOIS DEPARTMENT OF TRANSPORTATION
		DRAWN - MTH	REVISED -	
	PLOT SCALE =	CHECKED - CDM	REVISED -	
	PLOT DATE = 5/26/2017	DATE - 1/20/2017	REVISED -	

SIGNING PLANS BILL OF MATERIALS

SCALE: | SHEET NO. OF SHEETS | STA. TO STA.

F.A.I RTE.	SECTION	COUNTY	TOTAL SHEETS	SHEET NO.
74	(81-1)R & 81-1HVBR	ROCK ISLAND	1504	526

CONTRACT NO. 64C08

ILLINOIS FED. AID PROJECT

PROPOSED SIGN SCHEDULE

SIGN PLAN SHEET NUMBER	DESCRIPTION	SIGN DESIGNATION	SIGN CODE	ALIGNMENT NAME	STATION	OFFSET		PANEL WIDTH	PANEL HEIGHT	POST ONE LENGTH	POST TWO LENGTH	MOUNTING TYPE BM - BS - CL LP - MP - MPS - PM - SM - SP - TC - TS - TSB - WP	50800205 REINF BARS, EPOXY CTD	72000100 SIGN PANEL - TYPE 1	72000200 SIGN PANEL - TYPE 2	72000300 SIGN PANEL - TYPE 3	72400500 RELOCATE SIGN PANEL ASSEMBLY - TYPE A	72600100 MILE POST MARKER ASSEMBLY	72700100 STRUCTURAL STEEL SIGN SUPPORT - BREAKAWAY	72800100 TELESCOPING STEEL SIGN SUPPORT	73000100 WOOD SIGN SUPPORT	73100100 BASE FOR TELESCOPING STEEL SIGN SUPPORT	73400100 CONCRETE FOUNDATIONS	X7260100 MILE POST MARKER ASSEMBLY (SPECIAL)	#2000319 PARAPET MOUNTED SIGN SUPPORT ASSEMBLY
								FOOT	FOOT	FOOT	FOOT		POUND	SQ FT	SQ FT	SQ FT	EACH	EACH	POUND	FOOT	FOOT	EACH	CU YD	EACH	EACH
SGN-09	ADDED LANE	W4-3	WB-RDH-WP-100-P	RAMP RD-H	217+40	25	LT	4.00	4.00	17		WP		--	16.00	--	--	--		--	17	--		--	--
SGN-09	ADDED LANE	W4-3	WB-74-LP-100a-P	I-74	6746+92	72	RT	4.00	4.00	0		LP		--	16.00	--	--	--		--	--	--		--	--
SGN-09	SPEED LIMIT	R2-1	EB-74-WP-103-P	I-74	6746+00	78	LT	4.00	5.00	21		WP		--	20.00	--	--	--		--	21	--		--	--
SGN-09	MINIMUM SPEED LIMIT	R2-I102	EB-74-WP-105-P	I-74	6746+00	78	LT	4.00	3.00					--	12.00	--	--	--				--		--	--
SGN-09	SPEED LIMIT	R2-1	WB-74-WP-102-P	I-74	25+59	75	LT	4.00	5.00	18		WP		--	20.00	--	--	--		--	18	--		--	--
SGN-09	RIGHT LANE ENDS	W9-1	EB-74-LP-101-P	I-74	6746+75	76	LT	4.00	4.00	0		LP		--	16.00	--	--	--		--	--	--		--	--
SGN-09	EAST	M3-2(I)	EB-74-WP-107-P	I-74	25+65	78	RT	3.00	1.50	15		WP		4.50	--	--	--	--		--	15	--		--	--
	INTERSTATE ROUTE SIGN	M1-1	EB-74-WP-109-P	I-74	25+65			3.00	3.00					9.00	--	--	--	--		--	--	--		--	--
	EAST	M3-2(I)	EB-74-WP-111-P	I-74	25+65			3.00	1.50					4.50	--	--	--	--		--	--	--		--	--
	STATE ROUTE SIGN	M1-4	EB-74-WP-113-P	I-74	25+65			3.00	3.00					9.00	--	--	--	--		--	--	--		--	--
SGN-09	ADVANCE TRAFFIC CONTROL	W3-3	EB-RDG-WP-114-P	RAMP RD-G	130+65	29	RT	3.00	3.00	16		WP		9.00	--	--	--	--		--	16	--		--	--
SGN-11	RAMP 35 MPH	W13-3	EB-R6C-LP-124-P	RAMP 6TH-C	320+65	11	RT	4.00	5.00	0		LP		--	20.00	--	--	--		--	--	--		--	--
SGN-11	.6 MP	D10-1A	WB-74-MP-104-P	I-74	28+78	80	LT	1.00	3.00	0		MP		--	--	--	--	1		--	--	--		--	--
SGN-11	.6 MP	D10-1A	EB-74-MP-113a-P	I-74	28+95	88	RT	1.00	3.00	0		MP		--	--	--	--	1		--	--	--		--	--
SGN-11	.8 MP	D10-1A	WB-74-MPS-110-P	I-74	40+00	63	LT	1.00	3.00	0		MPS		--	--	--	--	--		--	--	--		1	--
SGN-11	MERGE	W4-1	WB-74-PM-112-P	I-74	40+70	63	LT	4.00	4.00	0		PM		--	16.00	--	--	--		--	--	--		--	1
SGN-11	NON MOTORIZED TRAFFIC SPECIAL	R5-I100	WB-RDH-LP-106-P	RAMP RD-H	211+54	38	RT	4.00	5.00	0		LP		--	20.00	--	--	--		--	--	--		--	--
SGN-11	WRONG WAY	R5-1A	EB-RDG-WP-115-P	RAMP RD-G	134+91	38	LT	3.50	2.50	16		WP		8.75	--	--	--	--		--	16	--		--	--
SGN-11	DO NOT ENTER	R5-1	EB-RDG-WP-116-P	RAMP RD-G	136+00	38	LT	4.00	4.00	17		WP		--	16.00	--	--	--		--	17	--		--	--
SGN-12	NON MOTORIZED TRAFFIC SPECIAL	R5-I100	NB-R6D-WP-114-P	RAMP 6TH-D	420+75	21	RT	4.00	5.00	18		WP		--	20.00	--	--	--		--	18	--		--	--
SGN-12	ONE WAY	R6-1L	NB-R6D-WP-116-P	RAMP 6TH-D	420+81	26	LT	4.50	1.50	23		WP		6.75	--	--	--	--		--	23	--		--	--
	ONE WAY	R6-1R	NB-R6D-WP-118-P	RAMP 6TH-D	420+81			4.50	1.50					6.75	--	--	--	--						--	--
	DO NOT ENTER	R5-1	NB-R6D-WP-120-P	RAMP 6TH-D	420+81			4.00	4.00					--	16.00	--	--	--						--	--
	KEEP RIGHT	R4-7	NB-R6D-WP-122-P	RAMP 6TH-D	420+81			2.00	2.50					5.00	--	--	--	--						--	--
SGN-11	I-74, ROUTE 6 , EAST, PEORIA	GUIDE	EB-74-SP-103-P	I-74	29+12.50	--	RT	14.50	7.00	0		SP		--	--	101.50	--	--		--	--	--		--	--
SGN-11	EXIT 3, AVENUE OF THE CITIES. 1 MILE	GUIDE	EB-74-SP-105-P	I-74	29+12.50	--	RT	13.00	11.00	0		SP		--	--	143.00	--	--		--	--	--		--	--
SGN-11	LANE ENDS, 800 FEET, ARROW DOWN	GUIDE	EB-74-SP-107-P	I-74	29+12.50	--	RT	12.00	8.00	0		SP		--	--	96.00	--	--		--	--	--		--	--
SGN-11	EXIT 1B, ILLINOIS 92, EAST, 6TH AVE	GUIDE	EB-74-SP-109-P	I-74	29+12.50	--	RT	13.00	10.00	0		SP		--	--	130.00	--	--		--	--	--		--	--
SGN-11	1B EXIT GORE SIGN	E5-1A	EB-74-TSB-115-P	I-74	33+35	78	RT	6.50	5.00	12		TSB		--	--	32.50	--	--		12	--	1		--	--
SGN-11	LANE ENDS MERGE LEFT	W9-2	EB-74-PM-117-P	I-74	33+86	76	RT	4.00	4.00	0		PM		--	16.00	--	--	--		--	--	--		--	1
SGN-11	TRUCKS USE RIGHT LANE	R4-5	EB-74-LP-117a-P	I-74	36+22	0	RT	4.00	5.00	0		LP		--	20.00	--	--	--		--	--	--		--	--
SGN-11	.8 MP	D10-1A	EB-74-MPS-133-P	I-74	40+00	72	RT	1.00	3.00	0		MPS		--	--	--	--	--		--	--	--		1	--
SGN-11	HORIZONTAL ALIGNMENT LEFT	W1-2L	EB-R6C-LP-119-P	RAMP 6TH-C	327+21	10	RT	3.00	3.00	0		LP		9.00	--	--	--	--		--	--	--		--	--
SGN-11	ADVISORY SPEED 35MPH	W13-1P	EB-R6C-LP-121-P	RAMP 6TH-C	327+21	10	RT	2.00	2.00					4.00	--	--	--	--		--	--	--		--	--
SGN-11	CHEVRON ALIGNMENT	W1-8L	EB-R6C-PM-123-P	RAMP 6TH-C	331+10	10	RT	2.50	3.00	0		PM		7.50	--	--	--	--		--	--	--		--	1
SGN-11	ADVANCE TRAFFIC CONTROL	W3-3	EB-R6C-WP-125-P	RAMP 6TH-C	331+65	30	LT	3.00	3.00	16		WP		9.00	--	--	--	--		--	16	--		--	--
SGN-11	ADVANCE TRAFFIC CONTROL	W3-3	EB-R6C-PM-127-P	RAMP 6TH-C	331+65	10	RT	3.00	3.00	0		PM		9.00	--	--	--	--		--	--	--		--	1
SGN-11	CHEVRON ALIGNMENT	W1-8L	EB-R6C-PM-129-P	RAMP 6TH-C	332+30	10	RT	2.50	3.00	0		PM		7.50	--	--	--	--		--	--	--		--	1
SGN-11	CHEVRON ALIGNMENT	W1-8L	EB-R6C-WP-131-P	RAMP 6TH-C	333+50	14	RT	2.50	3.00	16		WP		7.50	--	--	--	--		--	16	--		--	--
SGN-12	CHEVRON ALIGNMENT	W1-8L	EB-R6C-WP-135-P	RAMP 6TH-C	334+70	13	RT	2.50	3.00	16		WP		7.50	--	--	--	--		--	16	--		--	--
SGN-12	WRONG WAY	R5-1A	EB-R6C-WP-137-P	RAMP 6TH-C	336+00	44	LT	3.50	2.50	16		WP		8.75	--	--	--	--		--	16	--		--	--
SGN-12	WRONG WAY	R5-1A	EB-R6C-WP-139-P	RAMP 6TH-C	336+00	13	RT	3.50	2.50	16		WP		8.75	--	--	--	--		--	16	--		--	--
SGN-13	WEST	M3-4(I)	EB-3-TS-301-P	RIVER DRIVE	3010+00	44	RT	2.00	1.00	18		TS		2.00	--	--	--	--		18	--	--		--	--
	INTERSTATE ROUTE SIGN	M1-1	EB-3-TS-302-P	RIVER DRIVE	3010+00	44	RT	2.00	2.00					4.00	--	--	--	--						--	--
	ADVANCE TURN ARROW	M5-1(I)	EB-3-TS-303-P	RIVER DRIVE	3010+00	44	RT	1.75	1.25					2.19	--	--	--	--						--	--
											SUBTOTAL	-	0	150	244	503	0	2	0	30	241	1	0.0	2	5

NOTES:
1. STA & OFFSETS TO CENTER OF SIGN PANEL
2. * SEE SHEET SGN-01 FOR BREAKAWAY STEEL SIGN SUPPORT DESIGN INFORMATION

FILE NAME = D2CONAB-HPS-shs-sign304.dgn	USER NAME = heato81447	DESIGNED - MTH	REVISED - 5/16/17
		DRAWN - MTH	REVISED -
	PLOT SCALE =	CHECKED - CDM	REVISED -
	PLOT DATE = 5/26/2017	DATE - 1/20/2017	REVISED -

STATE OF ILLINOIS
DEPARTMENT OF TRANSPORTATION

SIGNING PLANS
SIGN SCHEDULES
PROPOSED

SCALE: | SHEET NO. OF SHEETS | STA. TO STA.

SGN-05

F.A.I RTE.	SECTION	COUNTY	TOTAL SHEETS	SHEET NO.
74	(B1-1)R & B1-1)HVBR	ROCK ISLAND	1504	530

CONTRACT NO. 64C08
ILLINOIS FED. AID PROJECT

LAYOUT	MTH	5/15/2015
DRAWN	MTH	10/3/2016
REVIEWED	CDM	12/23/2016

HANSON

PROPOSED SIGN SCHEDULE

SIGN PLAN SHEET NUMBER	DESCRIPTION	SIGN DESIGNATION	SIGN CODE	ALIGNMENT NAME	STATION	OFFSET		PANEL WIDTH	PANEL HEIGHT	POST ONE LENGTH	POST TWO LENGTH	MOUNTING TYPE BM - BS - CL LP - MP - MPS - PM - SM - SP - TC - TS - TSB - WP	50800205 REINF BARS, EPOXY CTD	72000100 SIGN PANEL - TYPE 1	72000200 SIGN PANEL - TYPE 2	72000300 SIGN PANEL - TYPE 3	72400500 RELOCATE SIGN PANEL ASSEMBLY - TYPE A	72600100 MILE POST MARKER ASSEMBLY	72700100 STRUCTURAL STEEL SIGN SUPPORT - BREAKAWAY	72800100 TELESCOPING STEEL SIGN SUPPORT	73000100 WOOD SIGN SUPPORT	73100100 BASE FOR TELESCOPING STEEL SIGN SUPPORT	73400100 CONCRETE FOUNDATIONS	X7260100 MILE POST MARKER ASSEMBLY (SPECIAL)	#2000319 PARAPET MOUNTED SIGN SUPPORT ASSEMBLY
								FOOT	FOOT	FOOT	FOOT		POUND	SQ FT	SQ FT	SQ FT	EACH	EACH	POUND	FOOT	FOOT	EACH	CU YD	EACH	EACH
SGN-24	WEST	M3-4(l)	SB-19-TS-192-P	19TH STREET	1910+08	39	RT	2.00	1.00					2.00	--	--	--	--						--	--
SGN-24	INTERSTATE ROUTE SIGN	M1-1	SB-19-TS-193-P	19TH STREET	1910+08	39	RT	2.00	2.00					4.00	--	--	--	--						--	--
SGN-24	ADVANCE TURN ARROW	M5-1(l)	SB-19-TS-194-P	19TH STREET	1910+08	39	RT	1.75	1.25	22		TS		2.19	--	--	--	--		22	--	--		--	--
SGN-24	EAST	M3-2(l)	SB-19-TS-195-P	19TH STREET	1910+08	39	RT	2.00	1.00					2.00	--	--	--	--						--	--
SGN-24	INTERSTATE ROUTE SIGN	M1-1	SB-19-TS-196-P	19TH STREET	1910+08	39	RT	2.00	2.00					4.00	--	--	--	--						--	--
SGN-24	DIRECTIONAL ARROW	M6-3(l)	SB-19-TS-197-P	19TH STREET	1910+08	39	RT	1.75	1.25					2.19	--	--	--	--						--	--
SGN-24	KEEP RIGHT	R4-7	NB-19-TSB-198-P	19TH STREET	1911+28	5.5	LT	2.00	2.50	10		TSB		5.00	--	--	--	--		10	--	1		--	--
SGN-24	KEEP RIGHT	R4-7	SB-19-TS-199-P	19TH STREET	1913+29	6	RT	2.00	2.50	10		TSB		5.00	--	--	--	--		10	--	1		--	--
SGN-24	SOUTH 19TH ST	GUIDE	SB-19-SP-199A-P	19TH STREET	1913+72		RT	17.00	8.00	0		SP		--	--	136.00	--	--		--	--	--		--	--
SGN-24	TO I-74/US 6 EAST GALESBURG	GUIDE	SB-19-SP-199B-P	19TH STREET	1913+72		RT	13.00	9.00	0		SP		--	--	117.00	--	--		--	--	--		--	--
SGN-25	SPEED LIMIT 30	R2-1	NB-19-TS-200-P	19TH STREET	1916+00	38	RT	2.50	3.00	16		TS		7.50	--	--	--	--		18	--	--		--	--
											SUBTOTAL	-	0	34	0	253	0	0	0	58	0	2	0.0	0	0

TRAFFIC SIGNAL SIGNS

TRAFFIC SIGNAL PLAN SHEET NUMBER	DESCRIPTION	SIGN DESIGNATION	INTERSECTION	PANEL WIDTH (FOOT)	PANEL HEIGHT (FOOT)	NUMBER OF SIGNS																
TS-25	LEFT ONLY ARROW	R3-5	RIVER DR / RAMP RD-H	2.50	3.00	2		SM		15.00	--	--	--	--	--	--	--	--	--	--	--
TS-27	THRU ONLY ARROW	R3-5a	RIVER DR / RAMP RD-G	2.50	3.00	2		SM		15.00	--	--	--	--	--	--	--	--	--	--	--
TS-27	PEDESTRIAN PUSH BUTTON	R10-3	RIVER DR / RAMP RD-G	0.75	1.00	3		SM		2.25	--	--	--	--	--	--	--	--	--	--	--
TS-27	NO TURN ON RED EXCEPT FROM RIGHT LANE	R10-11c	RIVER DR / RAMP RD-G	2.50	3.50	1		SM		8.75	--	--	--	--	--	--	--	--	--	--	--
TS-27	4TH AVE	D3-1	4TH AVE / 19TH ST	3.50	1.00	2		SM		7.00	--	--	--	--	--	--	--	--	--	--	--
TS-27	19TH ST	D3-1	4TH AVE / 19TH ST	4.00	1.00	1		SM		4.00	--	--	--	--	--	--	--	--	--	--	--
TS-27	LEFT ONLY ARROW	R3-5	4TH AVE / 19TH ST	2.50	3.00	2		SM		15.00	--	--	--	--	--	--	--	--	--	--	--
TS-27	PEDESTRIAN PUSH BUTTON	R10-3	4TH AVE / 19TH ST	0.75	1.00	6		SM		4.50	--	--	--	--	--	--	--	--	--	--	--
TS-28	6TH AVE	D3-1	CONNECTOR RD / 6TH AVE	3.50	1.00	2		SM		7.00	--	--	--	--	--	--	--	--	--	--	--
TS-28	LEFT ONLY ARROW	R3-5	CONNECTOR RD / 6TH AVE	2.50	3.00	1		SM		7.50	--	--	--	--	--	--	--	--	--	--	--
TS-28	PEDESTRIAN PUSH BUTTON	R10-3	CONNECTOR RD / 6TH AVE	0.75	1.00	8		SM		6.00	--	--	--	--	--	--	--	--	--	--	--
TS-28	6TH AVE	D3-1	19TH ST / 6TH AVE	3.50	1.00	2		SM		7.00	--	--	--	--	--	--	--	--	--	--	--
TS-28	19TH ST	D3-1	19TH ST / 6TH AVE	4.00	1.00	1		SM		4.00	--	--	--	--	--	--	--	--	--	--	--
TS-28	LEFT ONLY ARROW	R3-5	19TH ST / 6TH AVE	2.50	3.00	1		SM		7.50	--	--	--	--	--	--	--	--	--	--	--
TS-28	PEDESTRIAN PUSH BUTTON	R10-3	19TH ST / 6TH AVE	0.75	1.00	8		SM		6.00	--	--	--	--	--	--	--	--	--	--	--
TS-29	7TH AVE	D3-1	CONNECTOR RD / 7TH AVE	3.50	1.00	1		SM		3.50	--	--	--	--	--	--	--	--	--	--	--
TS-29	LEFT ONLY ARROW	R3-5	CONNECTOR RD / 7TH AVE	2.50	3.00	1		SM		7.50	--	--	--	--	--	--	--	--	--	--	--
TS-29	PEDESTRIAN PUSH BUTTON	R10-3	CONNECTOR RD / 7TH AVE	0.75	1.00	2		SM		1.50	--	--	--	--	--	--	--	--	--	--	--
TS-29	7TH AVE	D3-1	19TH ST / 7TH AVE	3.50	1.00	2		SM		7.00	--	--	--	--	--	--	--	--	--	--	--
TS-29	19TH ST	D3-1	19TH ST / 7TH AVE	4.00	1.00	2		SM		8.00	--	--	--	--	--	--	--	--	--	--	--
TS-29	LEFT ONLY ARROW	R3-5	19TH ST / 7TH AVE	2.50	3.00	3		SM		22.50	--	--	--	--	--	--	--	--	--	--	--
TS-29	PEDESTRIAN PUSH BUTTON	R10-3	19TH ST / 7TH AVE	0.75	1.00	10		SM		7.50	--	--	--	--	--	--	--	--	--	--	--
							SUBTOTAL	-	0	174	0	0	0	0	0	0	0	0	0	0	0
							TOTAL	-	320	652	260	1,877	2	2	1,275	606	241	10	2.8	2	5

NOTES:
1. STA & OFFSETS TO CENTER OF SIGN PANEL
2. * SEE SHEET SGN-01 FOR BREAKAWAY STEEL SIGN SUPPORT DESIGN INFORMATION

LAYOUT	VTH	5-15-2015
DRAWN	VTH	11-7-2016
RECEIVED	CDM	12-23-2016

FILE NAME = D2CONNB-HMS-sht-sign087.dgn
USER NAME = heato01447
PLOT SCALE =
PLOT DATE = 5/26/2017
DESIGNED - MTH
DRAWN - MTH
CHECKED - CDM
DATE - 1/20/2017
REVISED - 5/16/17
REVISED -
REVISED -
REVISED -

STATE OF ILLINOIS
DEPARTMENT OF TRANSPORTATION

SIGNING PLANS
SIGN SCHEDULES
PROPOSED

SCALE: | SHEET NO. OF SHEETS | STA. TO STA.

F.A.I. RTE.	SECTION	COUNTY	TOTAL SHEETS	SHEET NO.
74	(B1-1)R & B1-1)HVBR	ROCK ISLAND	1504	533

CONTRACT NO. 64C08
ILLINOIS FED. AID PROJECT

SIGN SEQUENCE NUMBERING CODE

EXAMPLE

NB-74-SP-002-R

DIRECTION OF TRAFFIC

NB - NORTHBOUND
EB - EASTBOUND
SB - SOUTHBOUND
WB - WESTBOUND

ROADWAY

3 - RIVER DR
4 - 4TH AVE (WB IL 92)
6 - 6TH AVE (EB IL 92)
7 - 7TH AVE
12 - 12TH AVE
11 - 11TH AVE A
19 - 19TH ST
74 - INTERSTATE 74
R7A - RAMP 7TH A
R7B - RAMP 7TH B
R6D - RAMP 6TH D
RDG - RAMP RD-G
RDH - RAMP RD-H

MOUNTING TYPE

BM - BRIDGE MOUNTED
BS - BREAKAWAY STEEL
CL - CANTILEVER
LP - LIGHT POLE MOUNTED
SP - SPAN
TC - TRUSS COLUMN
TS - TELESCOPING STEEL SIGN SUPPORT
TSB - TELESCOPING STEEL SIGN SUPPORT WITH BASE
WP - WOOD POST
SM - TRAFFIC SIGNAL MOUNTED
PM - PARAPET MOUNTED
MP - MILE POST MARKER ASSEMBLY
MPS - MILE POST MARKER ASSEMBLY (SPECIAL)

SIGN PANEL NUMBER

ACTION

P - PROPOSED
R - REMOVE
RL - RELOCATE
RP - REMAIN IN PLACE

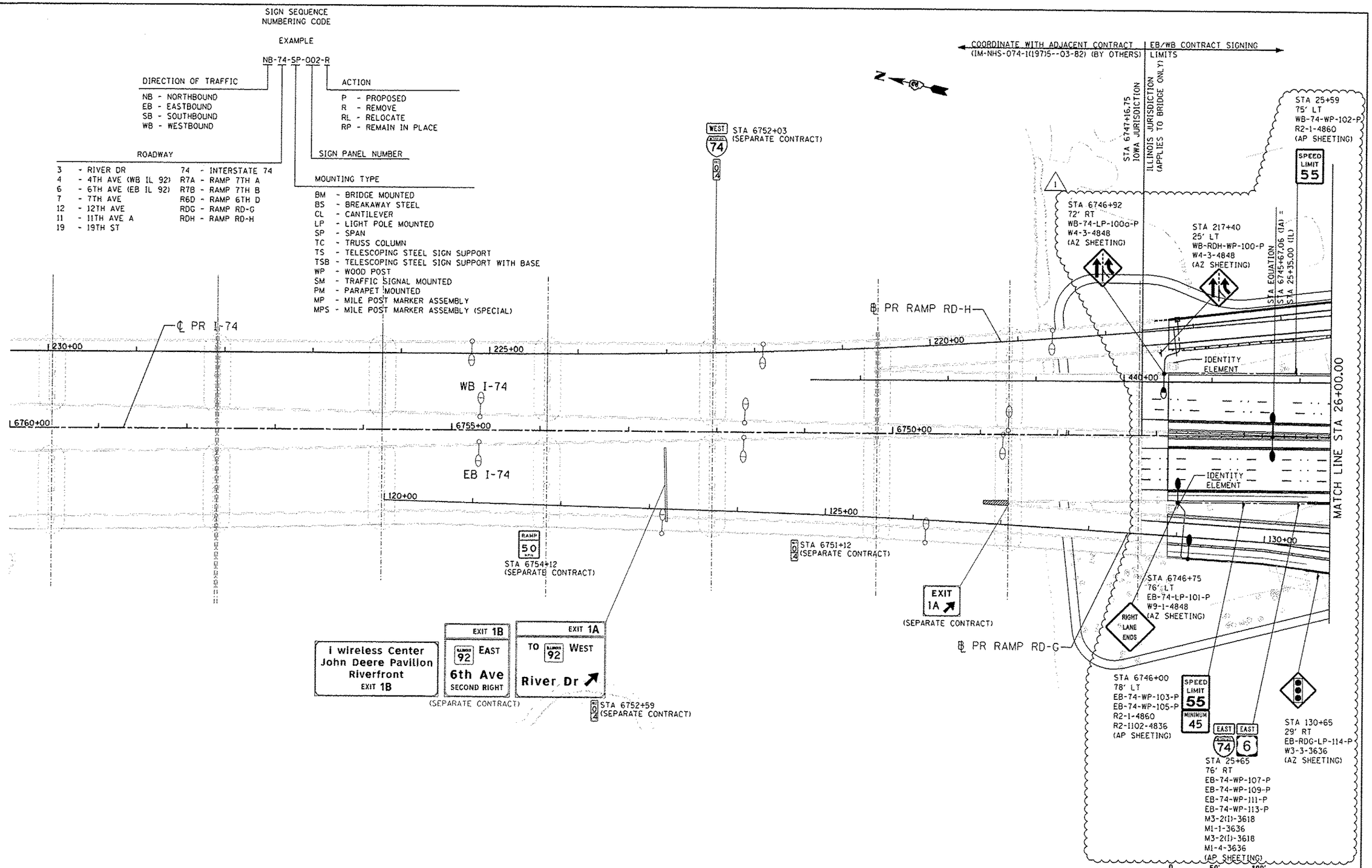

LAYOUT	MTH	5/15/2015
DRAWN	MTH	11/3/2016
REVIEWED	CDM	12/23/2016

FILE NAME = D2CONAB-HPS-sht-sign01.dgn

USER NAME = heato01447

PLOT SCALE = 1" = 50'

PLOT DATE = 5/30/2017

DESIGNED - MTH	REVISED - ⚠ 5/16/17		
DRAWN - MTH	REVISED -		
CHECKED - CDM	REVISED -		
DATE - 1/20/2017	REVISED -		

STATE OF ILLINOIS
DEPARTMENT OF TRANSPORTATION

SIGNING PLANS
I-74 MAINLINE
STA. 6760+00 TO STA. 26+00

SCALE: 1" = 50' | SHEET NO. OF SHEETS | STA. 6760+00 TO STA. 26+00

SGN-09

F.A.I RTE.	SECTION	COUNTY	TOTAL SHEETS	SHEET NO.
74	(81-1)R & 81-1HVBR	ROCK ISLAND	1504	534

CONTRACT NO. 64C08

ILLINOIS FED. AID PROJECT

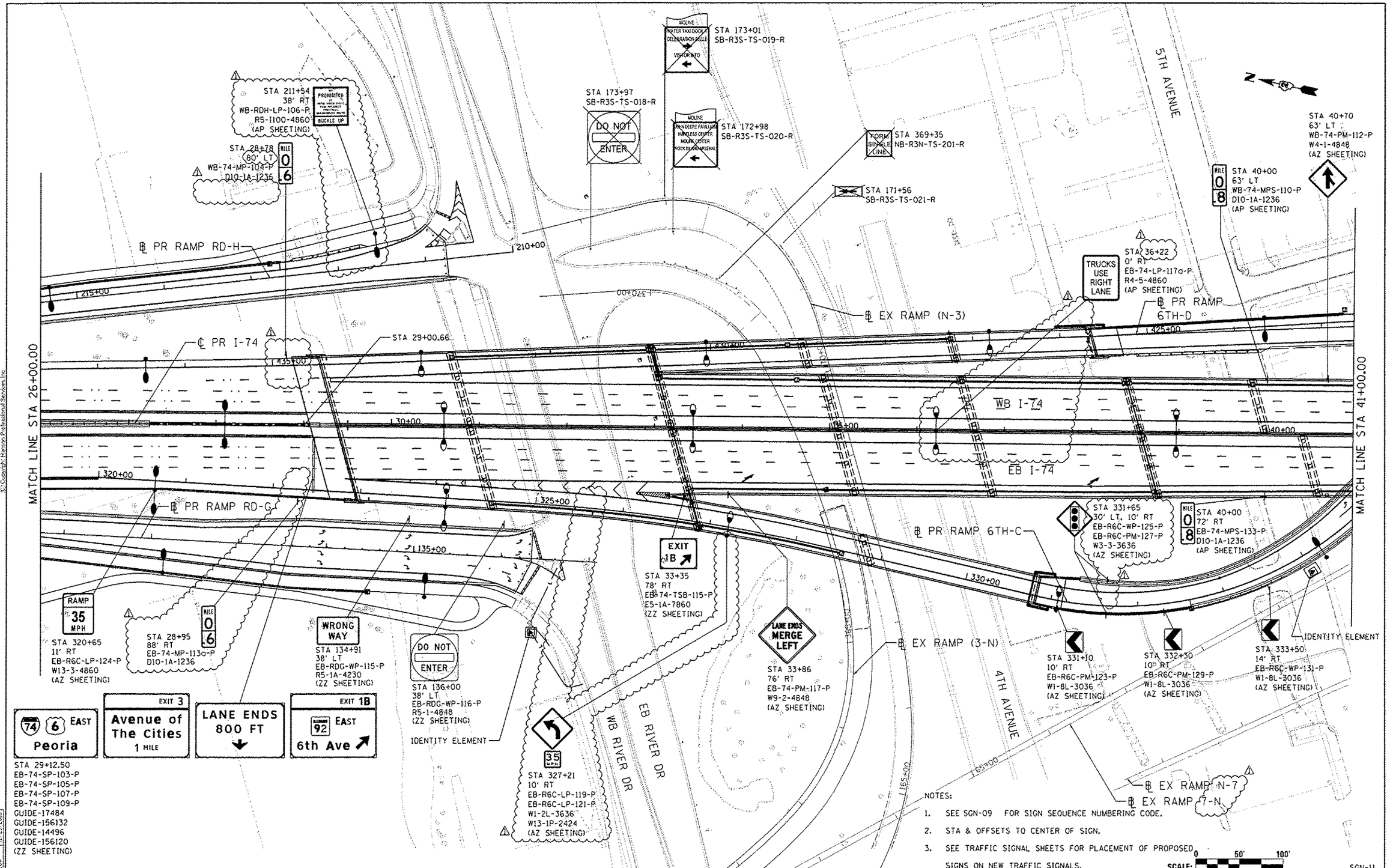

NOTES:

1. SEE SGN-09 FOR SIGN SEQUENCE NUMBERING CODE.
2. STA & OFFSETS TO CENTER OF SIGN.
3. SEE TRAFFIC SIGNAL SHEETS FOR PLACEMENT OF PROPOSED SIGNS ON NEW TRAFFIC SIGNALS.

SCALE: 0 50' 100'

SGN-11

LAYOUT	MTH	5/15/2015
DRAWN	MTH	11/3/2016
REVIEWED	CDM	12/23/2016

FILE NAME = D2CONAB-HPS-sht-sign012.dgn	USER NAME = petke00954	DESIGNED - MTH	REVISED - 05/16/17
		DRAWN - MTH	REVISED -
	PLOT SCALE = 1" = 50'	CHECKED - CDM	REVISED -
	PLOT DATE = 5/22/2017	DATE - 1/20/2017	REVISED -

STATE OF ILLINOIS
DEPARTMENT OF TRANSPORTATION

SIGNING PLANS
I-74 MAINLINE
STA. 26+00 TO STA. 41+00

SCALE: 1" = 50' | SHEET NO. OF SHEETS | STA. 26+00 TO STA. 41+00

F.A.I. RTE.	SECTION	COUNTY	TOTAL SHEETS	SHEET NO.
74	(81)-1JR & 81-1HVBR	ROCK ISLAND	1504	536
		CONTRACT NO. 64C08		
		ILLINOIS FED. AID PROJECT		

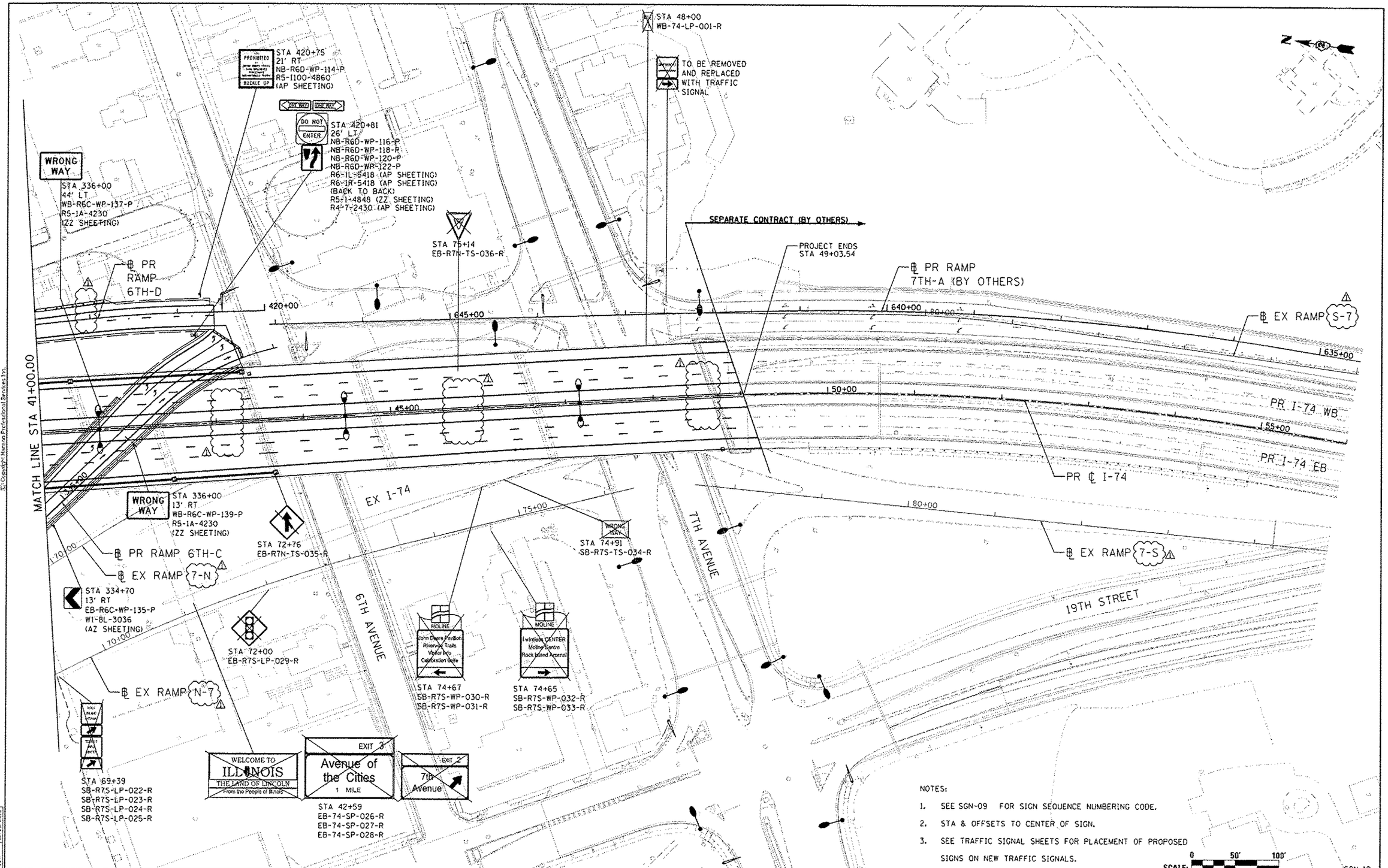

NOTES:

1. SEE SGN-09 FOR SIGN SEQUENCE NUMBERING CODE.
2. STA & OFFSETS TO CENTER OF SIGN.
3. SEE TRAFFIC SIGNAL SHEETS FOR PLACEMENT OF PROPOSED SIGNS ON NEW TRAFFIC SIGNALS.

SCALE: 0 50' 100'

SGN-12

HANSON

LAYOUT	MTH	5/15/2015
DRAWN	MTH	11/3/2016
REVIEWED	CDM	12/23/2016

FILE NAME = D2CONAR-HPS-sht-sign813.dgn	USER NAME = heate81447	DESIGNED - MTH	REVISED - ⚠ 05/16/17
		DRAWN - MTH	REVISED -
	PLOT SCALE = 1" = 50'	CHECKED - CDM	REVISED -
	PLOT DATE = 5/30/2017	DATE - 1/20/2017	REVISED -

STATE OF ILLINOIS
DEPARTMENT OF TRANSPORTATION

SIGNING PLANS
I-74 MAINLINE
STA. 41+00 TO STA. 56+00

SCALE: 1" = 50' | SHEET NO. OF SHEETS | STA. 41+00 TO STA. 56+00

F.A.I RTE.	SECTION	COUNTY	TOTAL SHEETS	SHEET NO.
74	(81-1)R & 81-1HVBR	ROCK ISLAND	1504	537

CONTRACT NO. 64C08

ILLINOIS FED. AID PROJECT

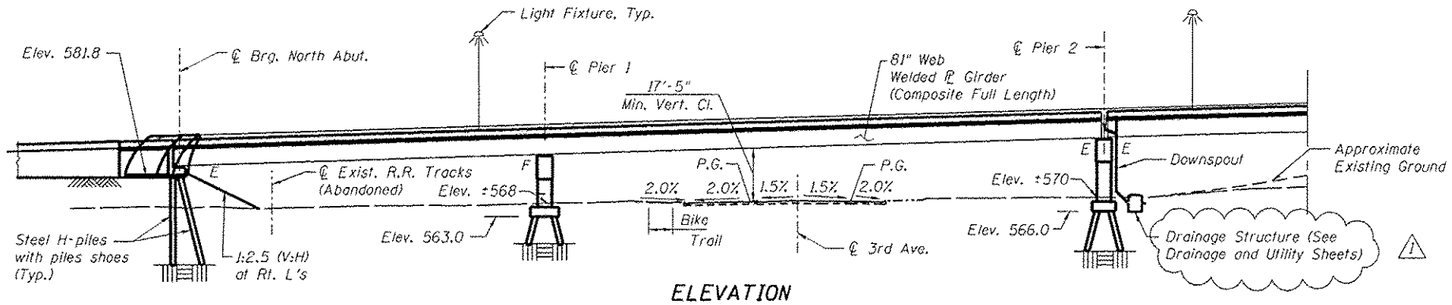

ELEVATION

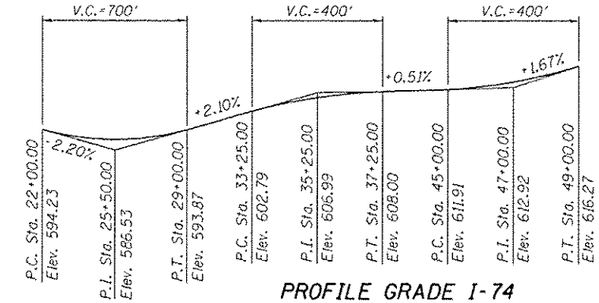

PROFILE GRADE I-74

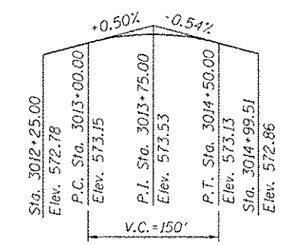

PROFILE GRADE 3RD AVE.

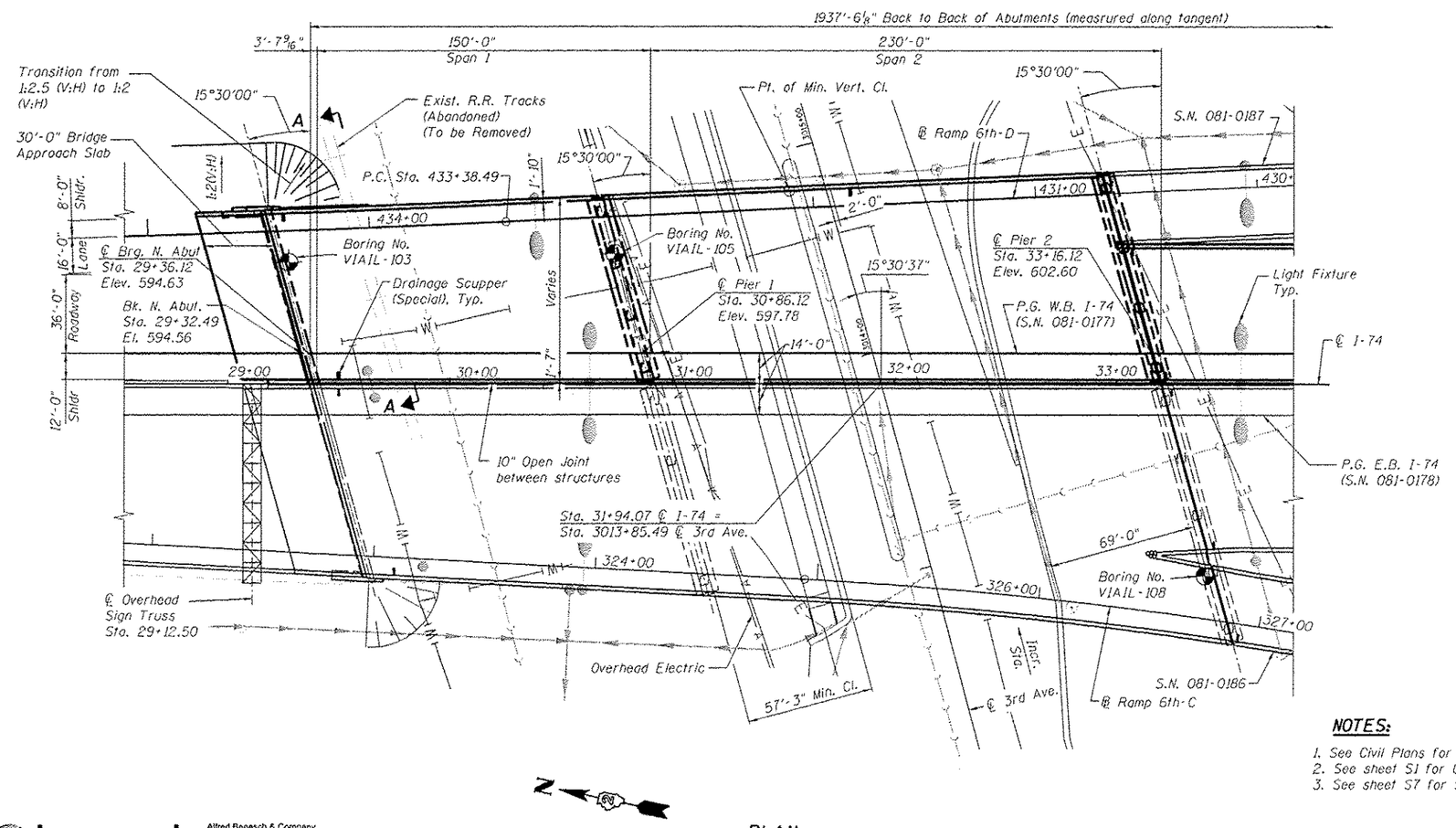

PLAN

NOTES:

1. See Civil Plans for Drainage and Utility information.
2. See sheet S1 for Utility Legend.
3. See sheet S7 for Section A-A.

GENERAL PLAN - SHEET 2 OF 5
I-74 OVER IL. RTE. 92 AND BNSF R.R.
FAI-74 SECTION (81-1HVB)
ROCK ISLAND COUNTY
STATION 36+16.49
STRUCTURE NO. 081-0177 (W.B.)

benesch
Alfred Benesch & Company
205 North Michigan Avenue, Suite 2400
Chicago, Illinois 60601
312-565-0450 Job No. 10061

FILENAME = 081-0177-C00AB-002-004-General Plan and Elevation	USER NAME = kenjder	DESIGNED - AAY	REVISED - △ 05/16/17	STATE OF ILLINOIS DEPARTMENT OF TRANSPORTATION	GENERAL PLAN AND ELEVATION – UNIT 1 STRUCTURE NO. 081-0177 (WESTBOUND)	F.A.I. RTE.	SECTION	COUNTY	TOTAL SHEETS / SHEET NO.
		CHECKED - AJK	REVISED -			74	(81-1)R & 81-1(HVBR)	ROCK ISLAND	1504 / 771
MODEL = 1 Plan	PLOT SCALE =	DRAWN - VH	REVISED -					CONTRACT NO. 64C08	
	PLOT DATE = 5/30/2017	CHECKED - AJK	REVISED -		SHEET NO. S2 OF S120 SHEETS			ILLINOIS FED. AID PROJECT	

c:\pwise_work\do_not_delete\dms02470\081-0177-C00AB-002-004-General Plan and Elevation - Unit 1-3.dgn
8:14:39 AM
5/30/2017

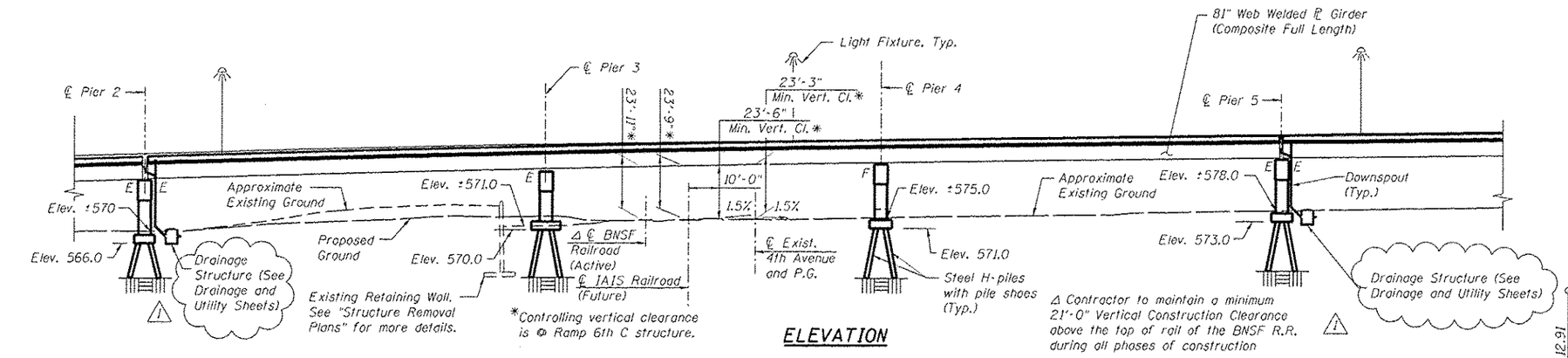

ELEVATION

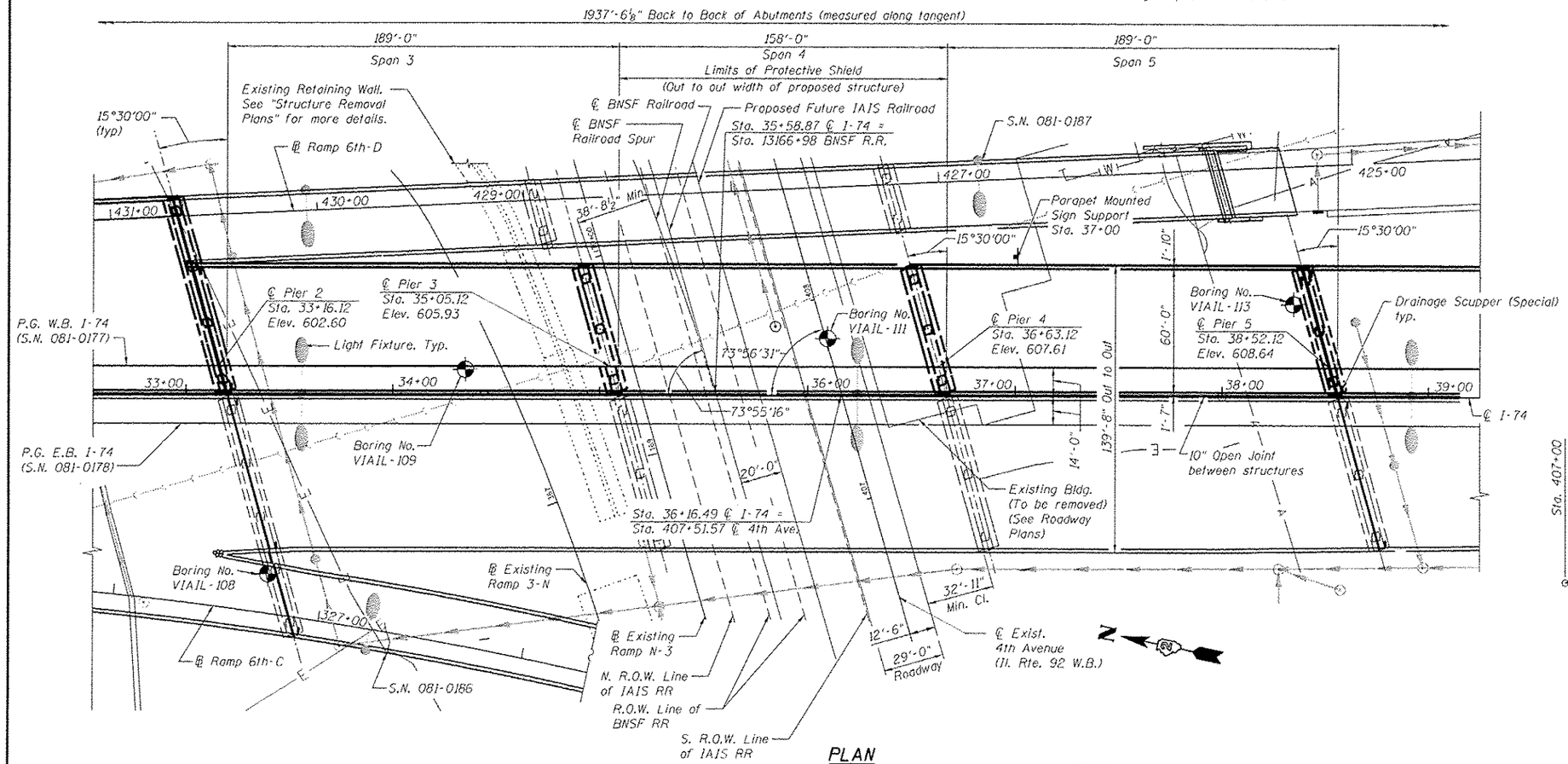

PLAN

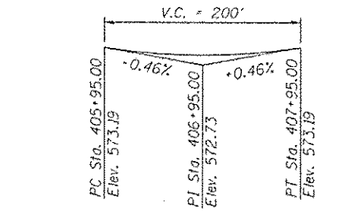

PROPOSED PROFILE GRADE
4TH AVE. (IL. RTE. 92 WB)

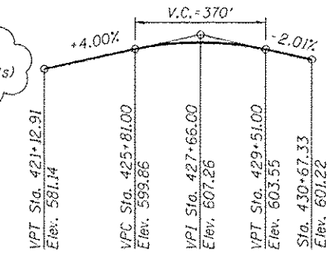

PROFILE GRADE
(Along ℄ Ramp 6th-D)

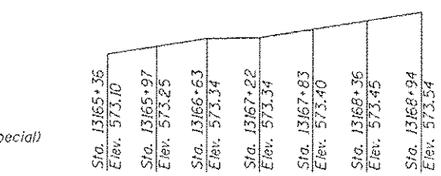

TOP OF RAIL BNSF R.R
BNSF Sta. 13166+98 = Mile Post 249.37

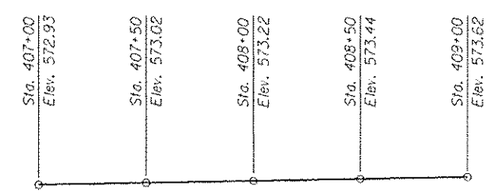

EXISTING PROFILE GRADE 4TH AVE.

NOTES:

1. See Civil Plans for Drainage and Utility information.
2. See sheet S1 for Utility Legend.

GENERAL PLAN - SHEET 3 OF 5
I-74 OVER IL. RTE. 92 AND BNSF R.R.
FAI-74 SECTION (81-1HVB)
ROCK ISLAND COUNTY
STATION 36+16.49
STRUCTURE NO. 081-0177 (W.B.)

benesch
Alfred Benesch & Company
205 North Michigan Avenue, Suite 2400
Chicago, Illinois 60601
312-565-0450 Job No. 10061

FILENAME = 081-0177-C00AB-002-004-General Plan and Elevation - Unit 1-3.dgn	USER NAME = kenjder	DESIGNED - AAY	REVISED - 1 05/16/17	STATE OF ILLINOIS DEPARTMENT OF TRANSPORTATION	GENERAL PLAN AND ELEVATION – UNIT 2 STRUCTURE NO. 081-0177 (WESTBOUND)	F.A.I. RTE.	SECTION	COUNTY	TOTAL SHEETS	SHEET NO.
		CHECKED - AJK	REVISED -			74	(81-1)R & 81-1(HVBR)	ROCK ISLAND	1504	772
MODEL = 2 Plan	PLOT SCALE =	DRAWN - VH	REVISED -					CONTRACT NO. 64C08		
	PLOT DATE = 5/30/2017	CHECKED - AJK	REVISED -		SHEET NO. S3 OF S120 SHEETS			ILLINOIS FED. AID PROJECT		

5/30/2017 8:15:01 AM c:\pwise_work\do_not_delete\dms02470\081-0177-C00AB-002-004-General Plan and Elevation - Unit 1-3.dgn

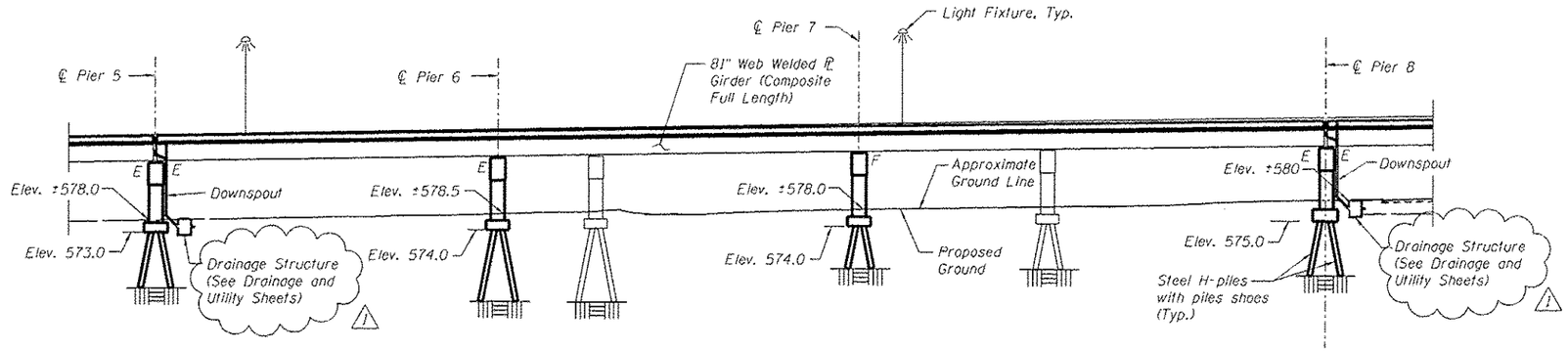

ELEVATION

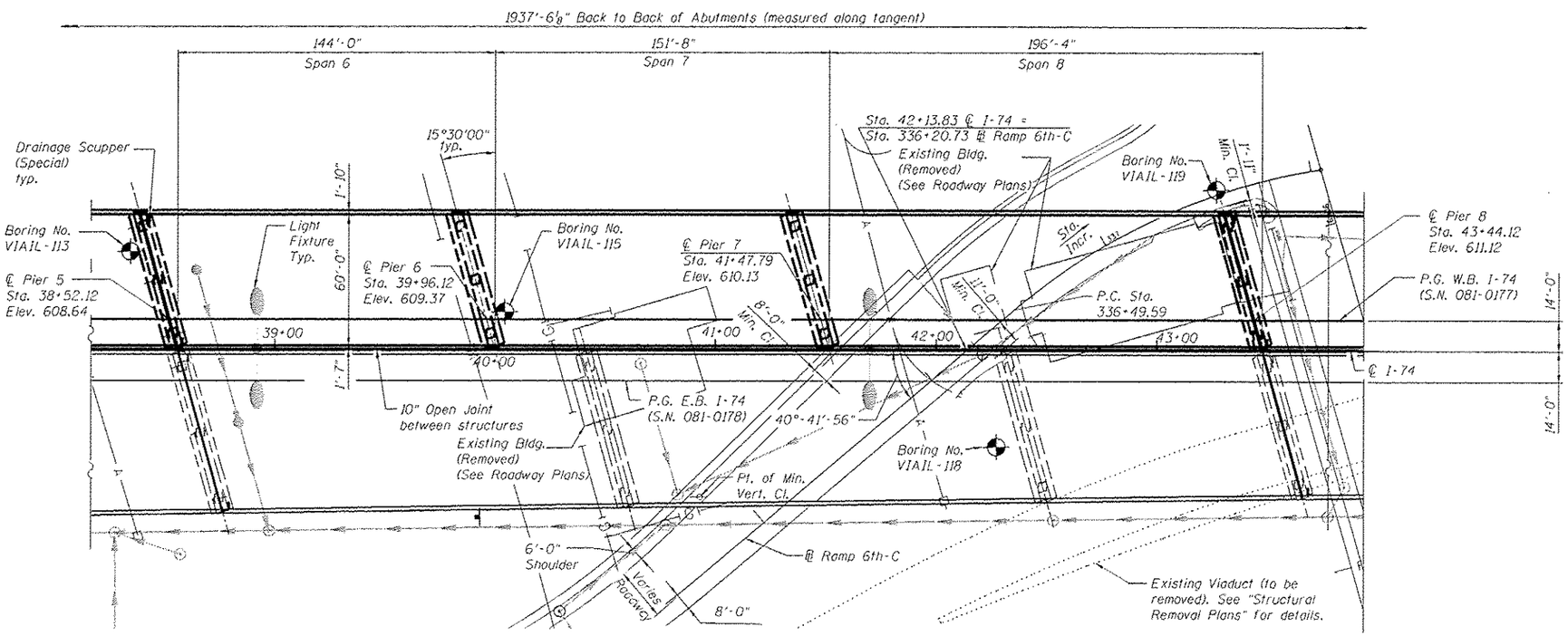

PLAN

N

CURVE DATA RAMP 6th-C-4

Δ = 31° 43' 31" (RT)
D = 20° 27' 46"
R = 280.00'
T = 79.56'
L = 155.04'
E = 11.08'
P.C. = Sta. 336+49.59
P.T. = Sta. 338+04.63
P.I. = Sta. 337+29.15
S.E. = Normal Crown

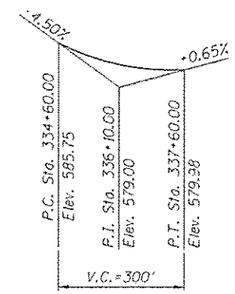

PROFILE GRADE RAMP 6TH-C

NOTES:

1. See Civil Plans for Drainage and Utility Information.
2. See sheet S1 for Utility Legend.

GENERAL PLAN - SHEET 4 OF 5
I-74 OVER IL. RTE. 92 AND BNSF R.R.
FAI-74 SECTION (81-1HVB)
ROCK ISLAND COUNTY
STATION 36+16.49
STRUCTURE NO. 081-0177 (W.B.)

benesch
Alfred Benesch & Company
205 North Michigan Avenue, Suite 2400
Chicago, Illinois 60601
312-565-0450 Job No. 10961

FILENAME = 081-0177-C00AB-002-004-General Plan and Elevation - Unit 1-3.dgn	USER NAME = kcruder	DESIGNED - AAY	REVISED - △ 05/16/17
		CHECKED - AJK	REVISED -
	PLOT SCALE =	DRAWN - VH	REVISED -
MODEL = 3 Plan	PLOT DATE = 5/30/2017	CHECKED - AJK	REVISED -

STATE OF ILLINOIS
DEPARTMENT OF TRANSPORTATION

GENERAL PLAN AND ELEVATION - UNIT 3
STRUCTURE NO. 081-0177 (WESTBOUND)
SHEET NO. S4 OF S120 SHEETS

F.A.I. RTE.	SECTION	COUNTY	TOTAL SHEETS	SHEET NO.
74	(81-1)R & 81-1(HVBR)	ROCK ISLAND	1504	773
		CONTRACT NO. 64C08		
		ILLINOIS FED. AID PROJECT		

c:\pwise_work\do_not_delete\dms02470\081-0177-C00AB-002-004-General Plan and Elevation - Unit 1-3.dgn
8:15:14 AM
5/30/2017

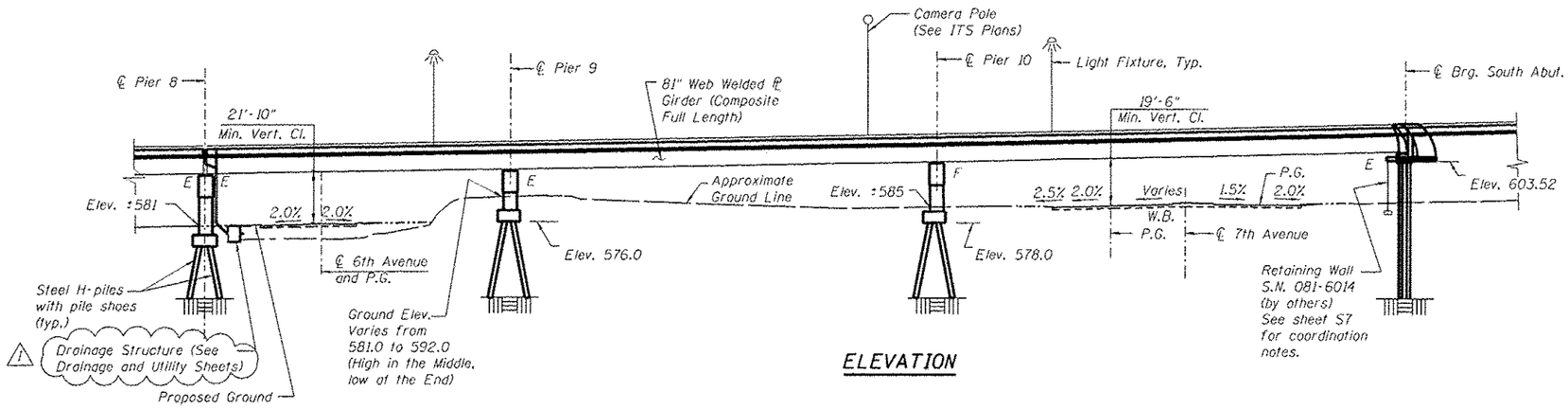

ELEVATION

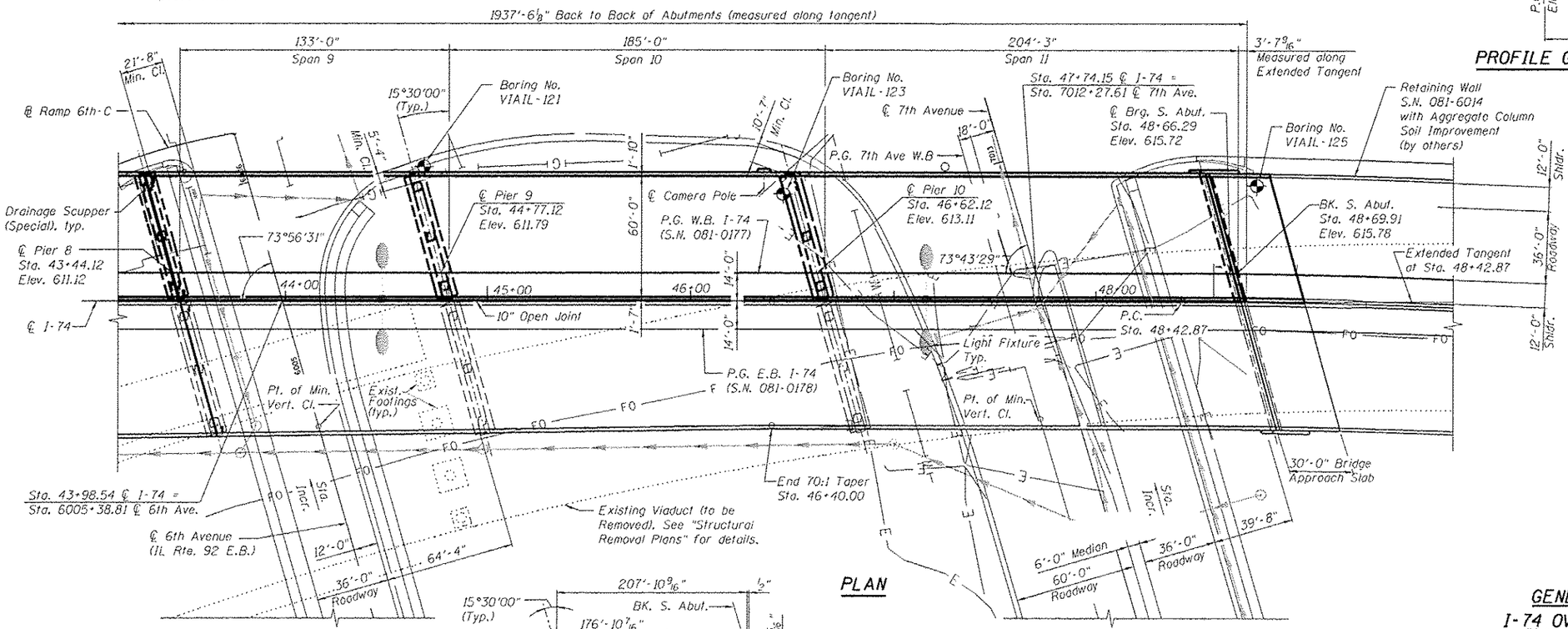

PLAN

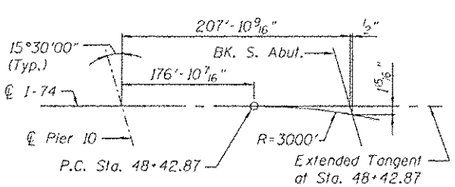

OFFSET SKETCH

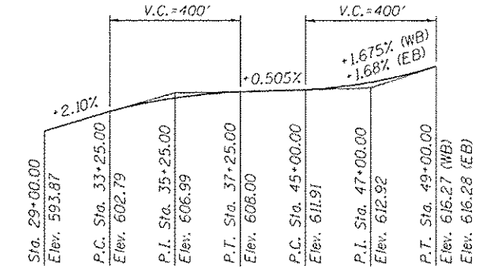

PROFILE GRADE I-74

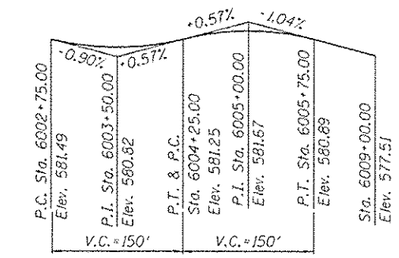

PROFILE GRADE 6TH AVE. (IL RTE. 92 E.B.)

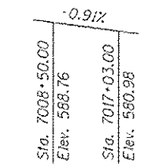

PROFILE GRADE 7TH AVE.

NOTES:

1. See Civil Plans for Drainage and Utility information.
2. See sheet S1 for Existing Utility Legend.

GENERAL PLAN - SHEET 5 OF 5
I-74 OVER IL. RTE. 92 AND BNSF R.R.
FAI-74 SECTION (81-1HVB)
ROCK ISLAND COUNTY
STATION 36+16.49
STRUCTURE NO. 081-0177 (W.B.)

benesch
Alfred Benesch & Company
205 North Michigan Avenue, Suite 2400
Chicago, Illinois 60601
312-565-0450 Job No. 10061

FILENAME = 081-0177-C00A8-005-General Plan and Elevation - Unit 4.dgn	USER NAME = kenader	DESIGNED - AAY	REVISED - 05/16/17	STATE OF ILLINOIS DEPARTMENT OF TRANSPORTATION	GENERAL PLAN AND ELEVATION - UNIT 4 STRUCTURE NO. 081-0177 (WESTBOUND)	F.A.I. RTE.	SECTION	COUNTY	TOTAL SHEETS / SHEET NO.
		CHECKED - AJK	REVISED -			74	(81-1)R & 81-1(HVBR)	ROCK ISLAND	1504 / 774
MODEL = Plot Sheet	PLOT SCALE =	DRAWN - VH	REVISED -					CONTRACT NO. 64C08	
	PLOT DATE = 5/30/2017	CHECKED - AJK	REVISED -		SHEET NO. S5 OF S120 SHEETS		ILLINOIS FED. AID PROJECT		

c:\pwise_work\do_not_delete\dms02470\081-0177-C00A8-005-General Plan and Elevation - Unit 4.dgn
8:15:36 AM
5/30/2017

GENERAL NOTES

1. Fasteners shall be ASTM A325 Type 1, mechanically galvanized bolts. Bolts $\frac{7}{8}$", open holes $\frac{15}{16}$", unless otherwise noted.

2. Calculated weight of Structural Steel = 5,614,000 lbs
   M 270 Grade 36: 324,000 lbs
   M 270 Grade 50: 5,290,000 lbs

   The Contractor may substitute Grade 50 for Grade 36 at no additional cost to the Contract.

3. No field welding is permitted except as specified in the contract documents.

4. Reinforcement bars designated (E) shall be epoxy coated.

5. If the Contractor elects to use cantilever forming brackets on the exterior beams or girders, the brackets shall be placed at the same locations as required for the hardwood blocks in Article 503.06(b) of the Standard Specifications. If additional cantilever forming brackets are required, hardwood blocking shall be wedged between the exterior and first interior beam at each of these additional bracket locations.

6. Bearing seat surfaces shall be constructed or adjusted to the designated elevations within a tolerance of 1/8 in. (0.01 ft.). Adjustment shall be made either by grinding the surface or by shimming the bearings.

7. Concrete Sealer shall be applied to the exposed faces of Piers 2, 5 and 8 and the North and South Abutments. Concrete sealer shall be applied to the exposed faces of the pier columns of Piers 7 and 9.

8. The Organic Zinc Rich Primer / Epoxy / Urethane Paint System shall be used for painting of new structural steel except where otherwise noted. The entire system shall be shop applied, with the exception of the exterior surfaces and the bottom of the bottom flange of fascia beams, masked off connection surfaces, and field installed fasteners, all of which shall be touched up and finish coated in the field. The color of the final finish coat for all interior steel surfaces shall be Gray, Munsell No. 5B 7/1.

   The exterior and bottom flange of the fascia beams and fascia bearings shall be finish coated with a fluoropolymer paint. The color of the final finish coat for the exterior and bottom flange of the fascia beams and bearings shall be Federal Standard 595C Color 26099 (gray-blue). See Special Provision for "Cleaning and Painting Structural Steel".

9. See Civil Plans for limits of special waste.

10. The embankment configuration shown shall be the minimum that must be placed and compacted prior to construction of the abutments.

11. Slip forming of the median parapet is not allowed. Slip forming of the East Traffic Barrier is allowed.

12. The Contractor shall use self-consolidating concrete (SCC) in all the pier columns. The self-consolidating concrete shall conform to all requirements as specified in Section 1020 of the Standard Specifications. Cost of SCC shall be included with the cost of Concrete Structures.

INDEX OF SHEETS

TOTAL BILL OF MATERIAL

	ITEM	UNIT	SUPER	SUB	TOTAL
	Protective Shield	Sq Yd	1,114	-	1,114
	Structure Excavation	Cu Yd	-	2,124	2,124
	Concrete Structures	Cu Yd	-	2,028.8	2,028.8
	Concrete Superstructure	Cu Yd	4,261.9	-	4,261.9
	Bridge Deck Grooving	Sq Yd	13,887	-	13,887
	Concrete Encasement	Cu Yd	-	6.5	6.5
	Protective Coat	Sq Yd	16,179	-	16,179
*	Furnishing and Erecting Structural Steel	L Sum	0.40	-	0.40
	Stud Shear Connectors	Each	43,826	-	43,826
	Reinforcement Bars, Epoxy Coated	Pound	1,243,730	424,310	1,668,040
	Bar Splicers	Each	143	17	160
	Slope Wall 4 Inch	Sq Yd	-	383	383
	Furnishing Steel Piles HP14x73	Foot	-	4,522	4,522
	Furnishing Steel Piles HP14x89	Foot	-	539	539
	Driving Piles	Foot	-	5,061	5,061
	Test Pile Steel HP14x73	Each	-	11	11
	Test Pile Steel HP14x89	Each	-	1	1
	Pile Shoes	Each	-	284	284
	Name Plates	Each	1	-	1
	Preformed Joint Strip Seal	Foot	145.0	-	145.0
	Finger Plate Expansion Joint, 4"	Foot	218.0	-	218.0
	Elastomeric Bearing Assembly, Type I	Each	25	-	25
	Elastomeric Bearing Assembly, Type II	Each	28	-	28
	Anchor Bolts, 1"	Each	-	362	362
	Concrete Sealer	Sq Ft	-	11,646	11,646
	Geocomposite Wall Drain	Sq Yd	-	100	100
	High Load Multi-Rotational Bearings, Guided Expansion, 300K	Each	11	-	11
	High Load Multi-Rotational Bearings, Guided Expansion, 500K	Each	14	-	14
	High Load Multi-Rotational Bearings, Guided Expansion, 600K	Each	7	-	7
	High Load Multi-Rotational Bearings, Fixed - 600K	Each	7	-	7
	High Load Multi-Rotational Bearings, Fixed - 650K	Each	7	-	7
	High Load Multi-Rotational Bearings, Fixed - 700K	Each	18	-	18
	Granular Backfill For Structures	Cu Yd	-	254	254
	Steel Railing (Special)	Foot	1,960	-	1,960
	Drainage Scuppers (Special)	Each	9	-	9
*	Drainage System	L Sum	-	0.4	0.4
	Pipe Underdrains For Structures 4"	Foot	-	97.0	97.0

* Remainder of this item installed with other structures in this Contract

benesch
Alfred Benesch & Company
205 North Michigan Avenue, Suite 2400
Chicago, Illinois 60601
312-565-0450 Job No. 10061

FILENAME = ...\081-0177-C00AB-006-General notes, Index of Sheets and Total Bill of Material.dgn	USER NAME = $USER$	DESIGNED - DTS	REVISED - △1 05/16/17
		CHECKED - AJK	REVISED -
	PLOT SCALE =	DRAWN - VH	REVISED -
MODEL = $MODEL	PLOT DATE = 5/27/2017	CHECKED - AJK	REVISED -

STATE OF ILLINOIS
DEPARTMENT OF TRANSPORTATION

GENERAL NOTES, INDEX OF SHEETS AND TOTAL BILL OF MATERIAL
STRUCTURE NO. 081-0177 (WESTBOUND)
SHEET NO. S6 OF S120 SHEETS

F.A.I. RTE.	SECTION	COUNTY	TOTAL SHEETS	SHEET NO.
74	(81-1)R & 81-1(HVBR)	ROCK ISLAND	1504	775
		CONTRACT NO. 64C08		
		ILLINOIS FED. AID PROJECT		

5/27/2017 1:00:02 AM 081-0177-C00AB-006-General notes, Index of Sheets and Total Bill of Material.dgn

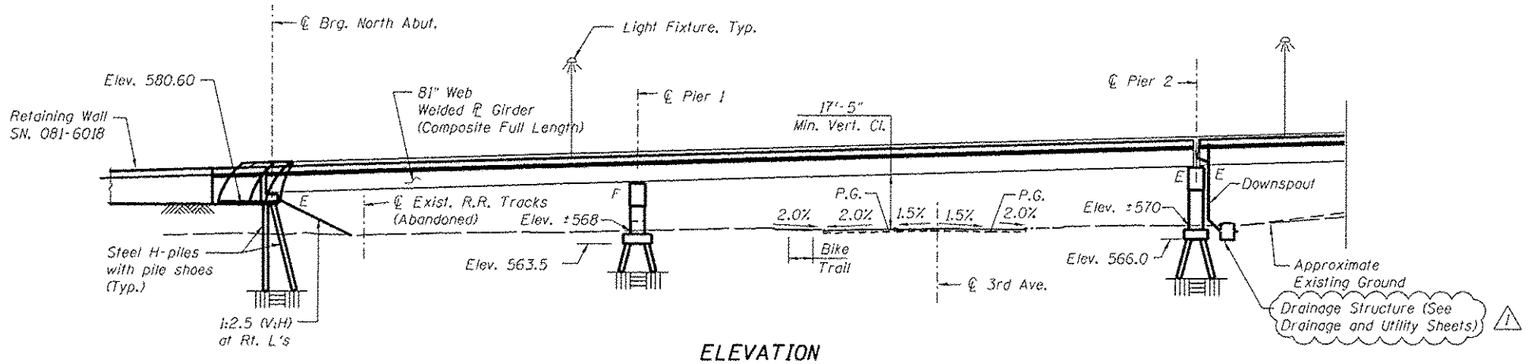

ELEVATION

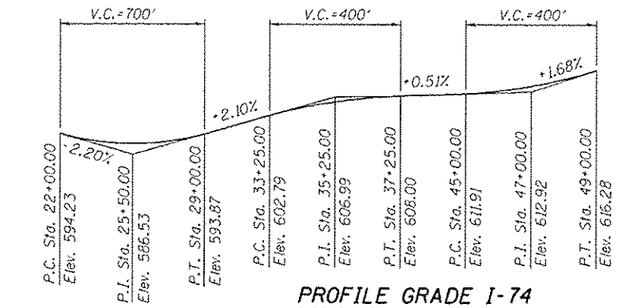

PROFILE GRADE I-74

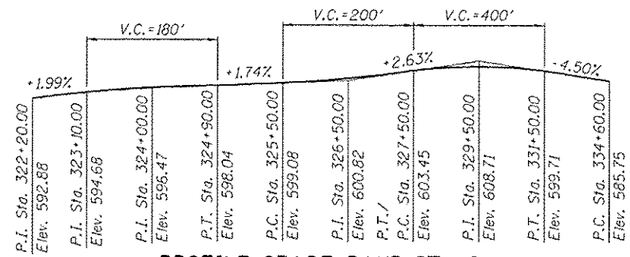

PROFILE GRADE RAMP 6TH-C

(Along ℙ Ramp 6th-C)

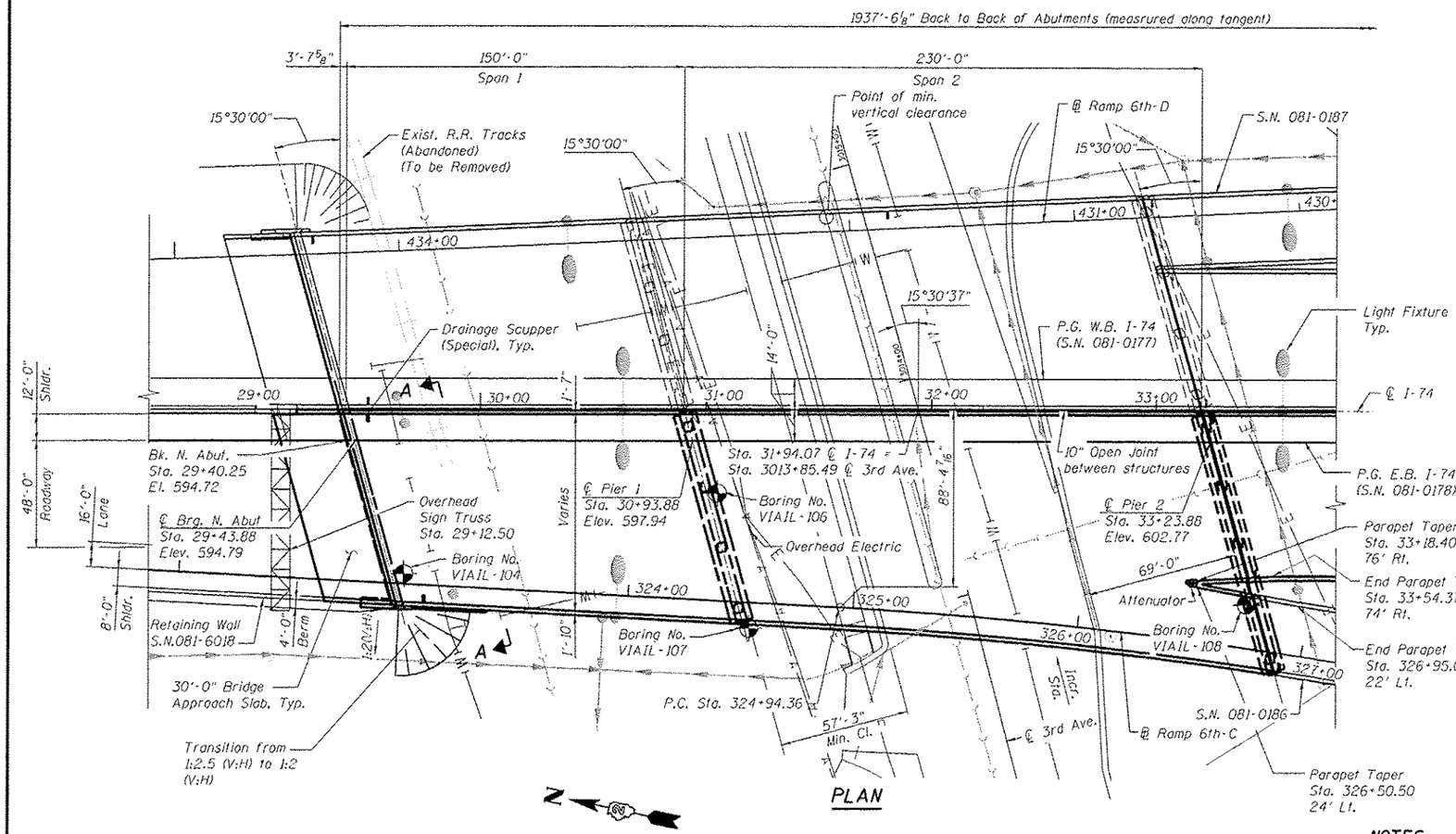

PLAN

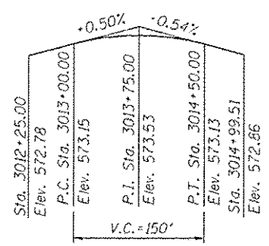

PROFILE GRADE 3RD AVE.

CURVE DATA
R 6TH-C-2

Δ = 9° 34' 14" (RT)
D = 2° 51' 53"
T = 167.43'
L = 334.07'
E = 7.00'
R = 2,000.00'
P.C. = Sta. 324+94.36
P.T. = Sta. 328+28.43
P.I. = Sta. 326+61.78
Normal Crown = Sta. 324+69
2.0% to 4.3% S.E. = Sta. 324+69 to 325+35
4.3% S.E. = Sta. 325+35 to 327+87
4.3% to 0% S.E. = Sta. 327+87 to 329+32
0% to -6.0% = 329+32 to 331+35

NOTES:

1. See Civil Plans for Drainage and Utility information.
2. For Section A-A, see sheet S7.

GENERAL PLAN - SHEET 2 OF 5
I-74 OVER IL. RTE. 92 AND BNSF R.R.
FAI-74 SECTION (81-1HVB)
ROCK ISLAND COUNTY
STATION 36+16.49
STRUCTURE NO. 081-0178 (E.B.)

benesch
Alfred Benesch & Company
205 North Michigan Avenue, Suite 2400
Chicago, Illinois 60601
312-565-0450 Job No. 10061

FILE NAME = 081-0178-C00A0-002-General Plan and Elevation - Unit 1.dgn	USER NAME = kenider	DESIGNED - AAY	REVISED - ⚠ 5/16/17
		CHECKED - AJK	REVISED -
	PLOT SCALE =	DRAWN - VH	REVISED -
MODEL: 1 Plan	PLOT DATE = 5/30/2017	CHECKED - AJK	REVISED -

STATE OF ILLINOIS
DEPARTMENT OF TRANSPORTATION

GENERAL PLAN AND ELEVATION – UNIT 1
STRUCTURE NO. 081-0178 (EASTBOUND)

SHEET NO. S2 OF S138 SHEETS

F.A.I. RTE.	SECTION	COUNTY	TOTAL SHEETS	SHEET NO.
74	81-1HVBR	ROCK ISLAND	1504	891
		CONTRACT NO. 64C08		
		ILLINOIS FED. AID PROJECT		

c:\pwise_work\do_not_delete\dms02467\081-0178-C00A0-002-General Plan and Elevation - Unit 1-3.dgn
8:12:33 AM
5/30/2017

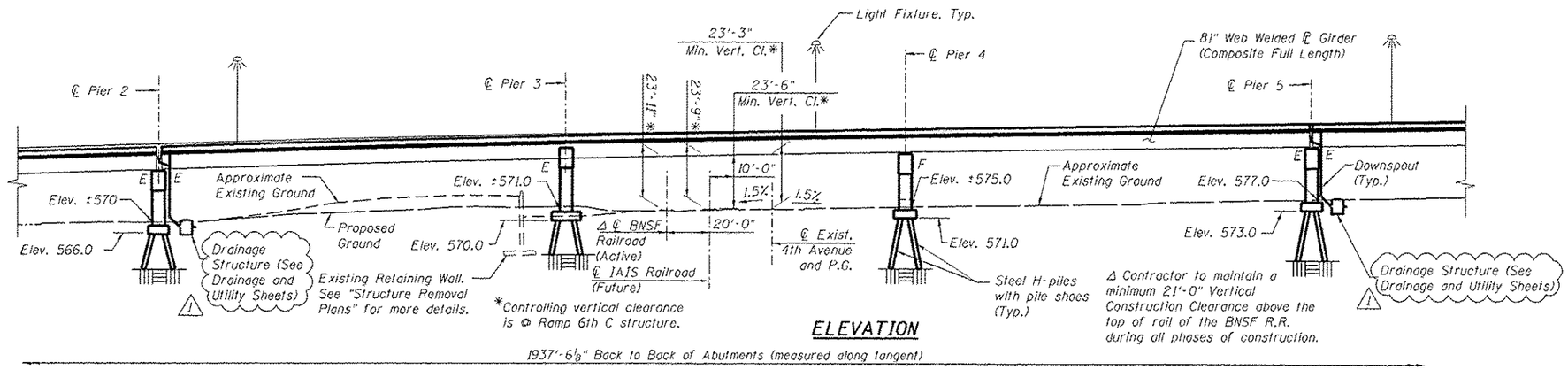

ELEVATION

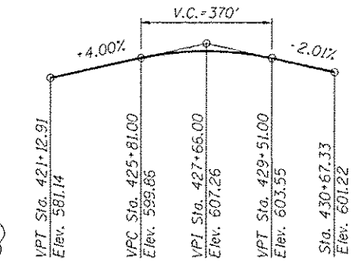

PROFILE GRADE

(Along ℄ Ramp 6th-D)

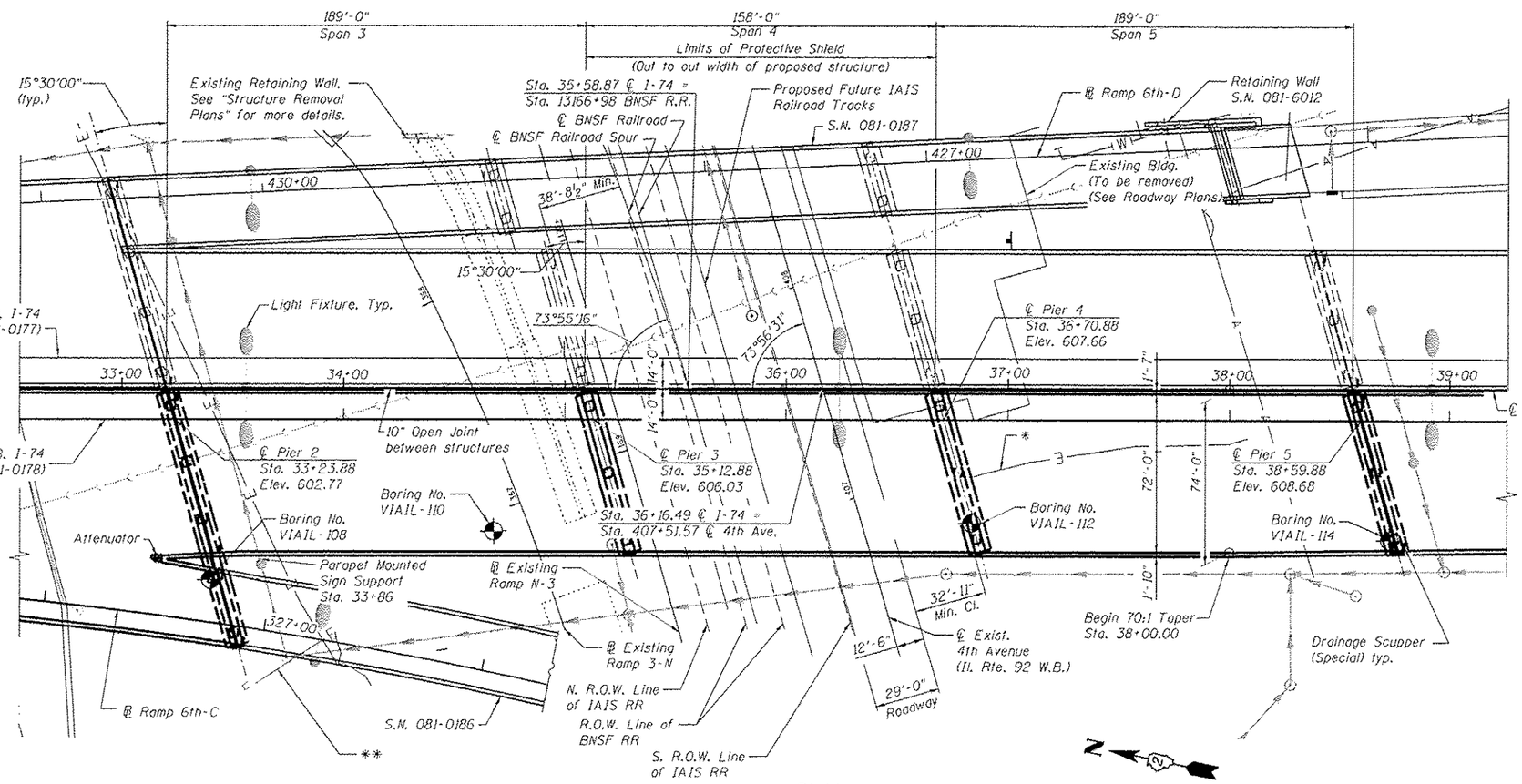

PLAN

** Existing Electrical Conduit to be abandoned. Remove as necessary to install Pier. Cost of removal included with "Structure Excavation"

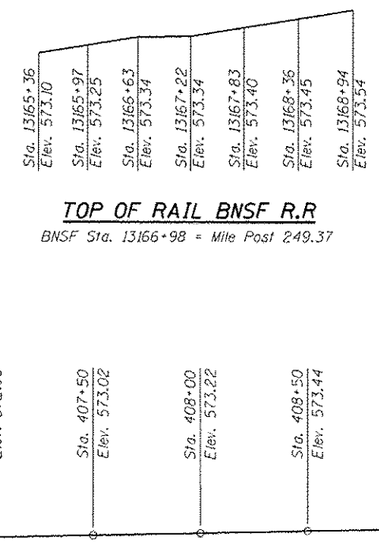

TOP OF RAIL BNSF R.R

BNSF Sta. 13166+98 = Mile Post 249.37

EXISTING PROFILE GRADE 4TH AVE.

NOTES:

1. See Civil Plans for Drainage and Utility information.
2. See Civil Removal Plans for removal information.

GENERAL PLAN - SHEET 3 OF 5
I-74 OVER IL. RTE. 92 AND BNSF R.R.
FAI-74 SECTION (81-1HVB)
ROCK ISLAND COUNTY
STATION 36+16.49
STRUCTURE NO. 081-0178 (E.B.)

benesch
Alfred Benesch & Company
205 North Michigan Avenue, Suite 2400
Chicago, Illinois 60601
312-565-0450
Job No. 10061

FILE NAME = 081-0178-C00A0-002-General Plan and Elevation - Unit 1-3.dgn	USER NAME = kenider	DESIGNED - AAY	REVISED - △ 5/16/17
		CHECKED - AJK	REVISED -
	PLOT SCALE =	DRAWN - VH	REVISED -
MODEL: 2 Plan	PLOT DATE = 5/30/2017	CHECKED - AAY	REVISED -

STATE OF ILLINOIS
DEPARTMENT OF TRANSPORTATION

GENERAL PLAN AND ELEVATION – UNIT 2
STRUCTURE NO. 081-0178 (EASTBOUND)

SHEET NO. 53 OF 5138 SHEETS

F.A.I. RTE.	SECTION	COUNTY	TOTAL SHEETS	SHEET NO.
74	81-1HVBR	ROCK ISLAND	1504	892
		CONTRACT NO. 64C08		
		ILLINOIS FED. AID PROJECT		

c:\pwise_work\do_not_delete\dms02467\081-0178-C00A0-002-General Plan and Elevation - Unit 1-3.dgn
8:13:01 AM
5/30/2017

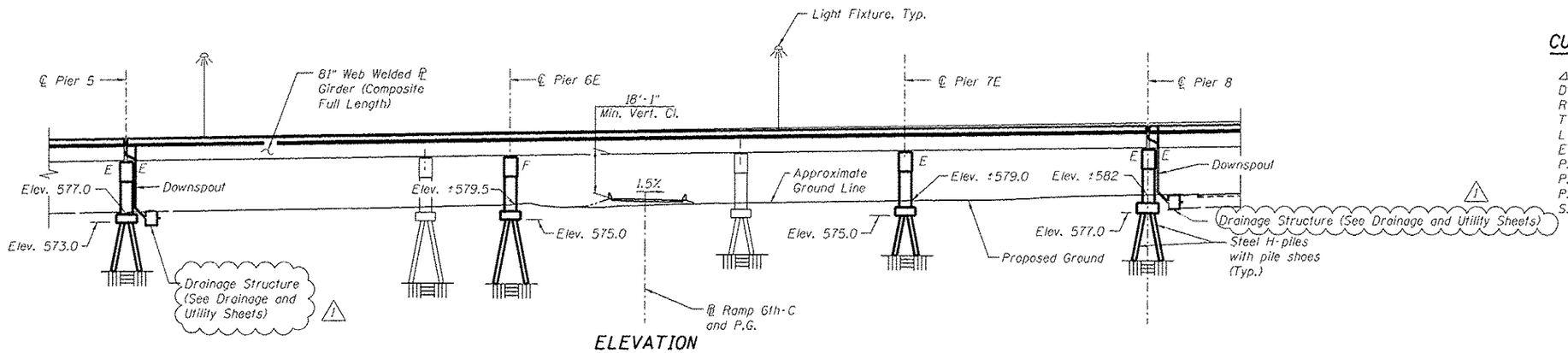

ELEVATION

CURVE DATA RAMP 6th-C-4

Δ = 31° 43' 31" (RT)
D = 20° 27' 46"
R = 280.00'
T = 79.56'
L = 155.04'
E = 11.08'
P.C. = Sta. 336+49.59
P.T. = Sta. 338+04.63
P.I. = Sta. 337+29.15
S.E. = Normal Crown

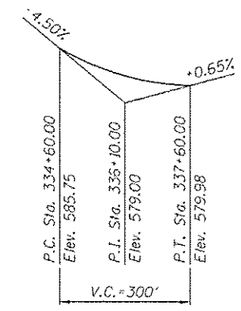

PROFILE GRADE RAMP 6TH-C

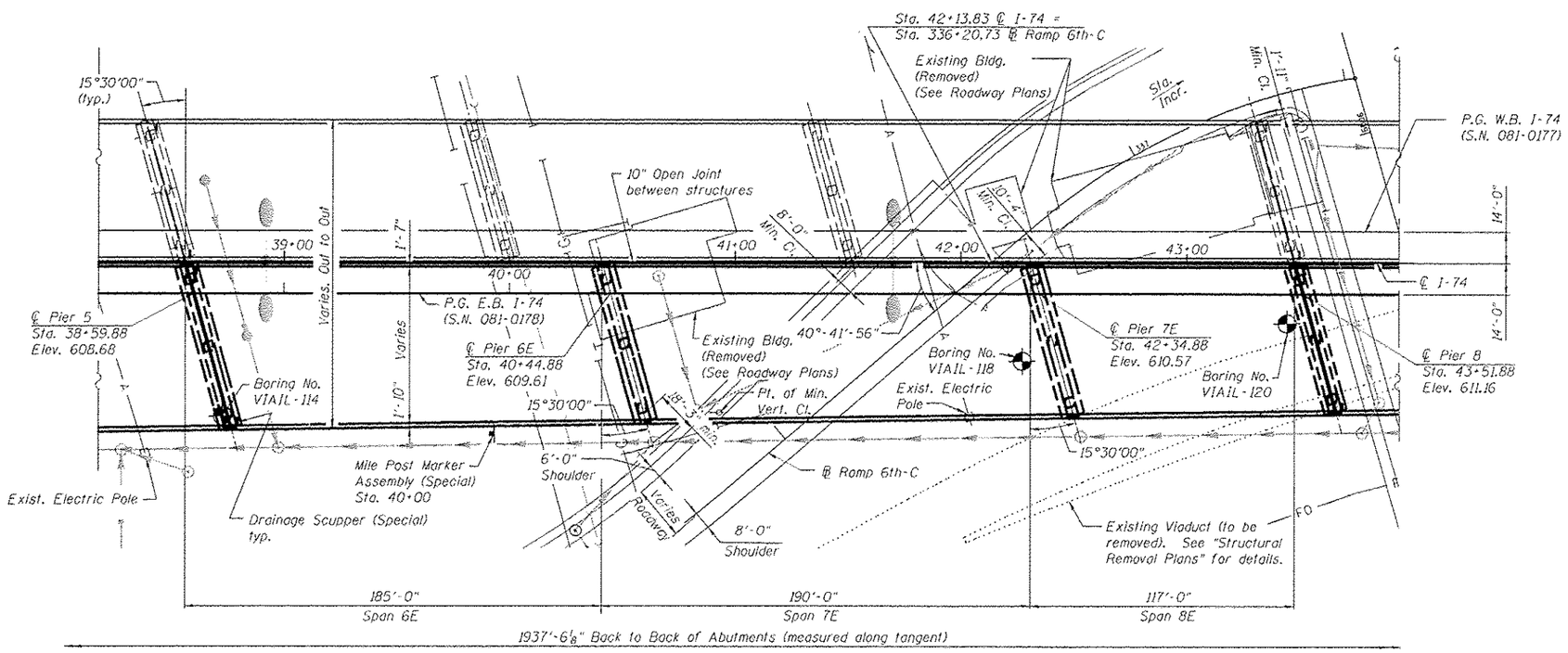

PLAN

NOTES:

1. See Civil Plans for Drainage and Utility information.
2. See Civil Removal Plans for removal information.

GENERAL PLAN - SHEET 4 OF 5
I-74 OVER IL. RTE. 92 AND BNSF R.R.
FAI-74 SECTION (81-1HVB)
ROCK ISLAND COUNTY
STATION 36+16.49
STRUCTURE NO. 081-0178 (E.B.)

benesch
Alfred Benesch & Company
205 North Michigan Avenue, Suite 2400
Chicago, Illinois 60601
312-565-0450 Job No. 10061

FILE NAME = 081-0178-C08AB-002-General Plan and Elevation - Unit 3.dgn	USER NAME = kenzler	DESIGNED - AAY	REVISED - △ 5/16/17	STATE OF ILLINOIS DEPARTMENT OF TRANSPORTATION	GENERAL PLAN AND ELEVATION – UNIT 3 STRUCTURE NO. 081-0178 (EASTBOUND)	F.A.I. RTE.	SECTION	COUNTY	TOTAL SHEETS	SHEET NO.
		CHECKED - AJK	REVISED -			74	81-1HVBR	ROCK ISLAND	1504	893
MODEL: 3 Plan	PLOT SCALE =	DRAWN - VH	REVISED -					CONTRACT NO. 64C08		
	PLOT DATE = 5/30/2017	CHECKED - AJK	REVISED -		SHEET NO. 54 OF 5138 SHEETS			ILLINOIS FED. AID PROJECT		

c:\pwise_work\do_not_delete\dms02467\081-0178-C08AB-002-General Plan and Elevation - Unit 3.dgn 8:13:14 AM 5/30/2017

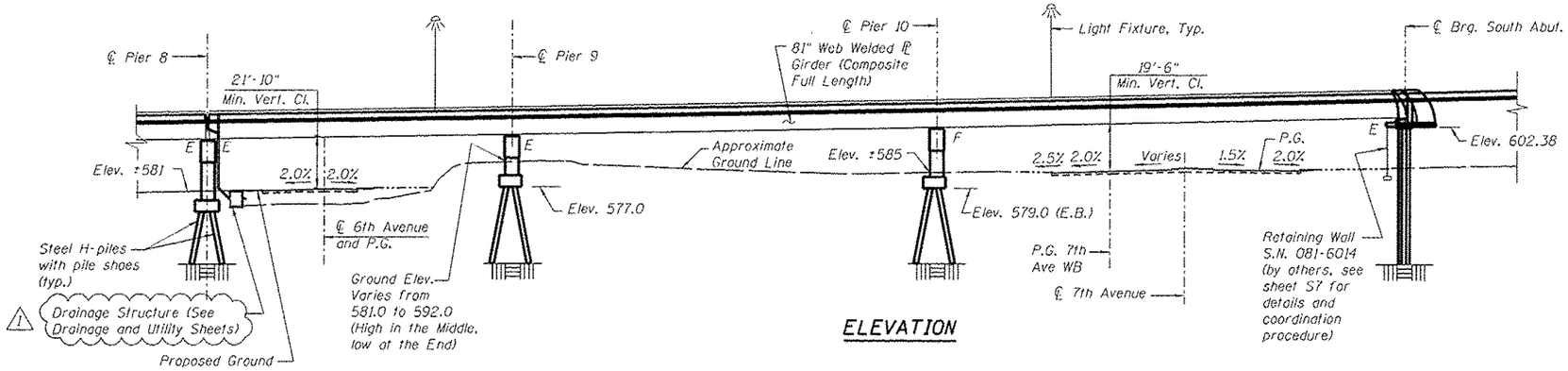

ELEVATION

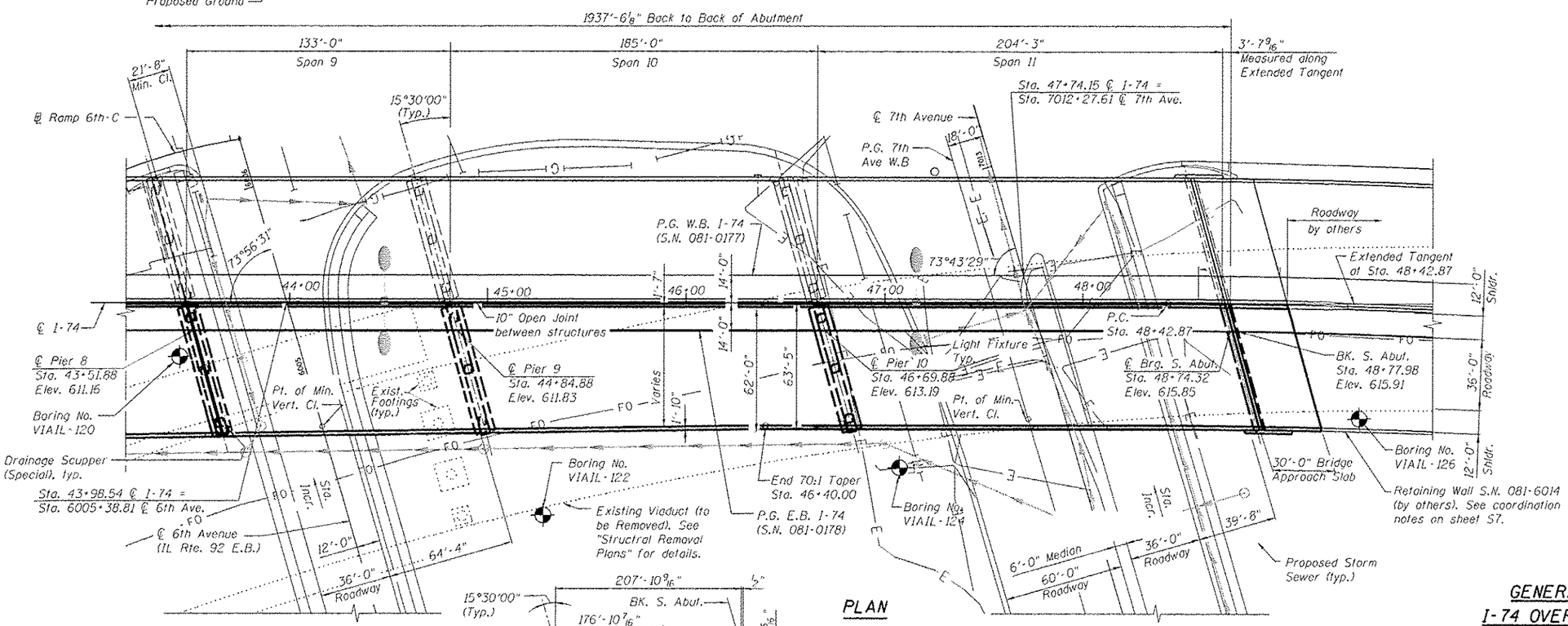

PLAN

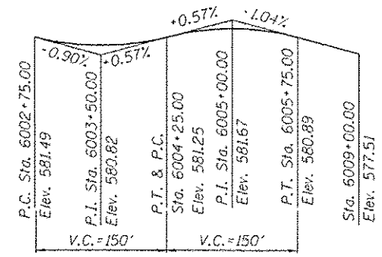

PROFILE GRADE 6TH AVE. (IL RTE. 92 E.B.)

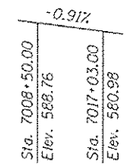

PROFILE GRADE 7TH AVE.

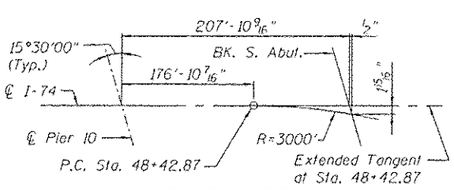

OFFSET SKETCH

NOTES:

1. See Civil Plans for Drainage and Utility information.
2. See sheet S1 for Existing Utility Legend.

GENERAL PLAN - SHEET 5 OF 5
I-74 OVER IL. RTE. 92 AND BNSF R.R.
FAI-74 SECTION (81-1HVB)
ROCK ISLAND COUNTY
STATION 36+16.49
STRUCTURE NO. 081-0178

benesch
Alfred Benesch & Company
205 North Michigan Avenue, Suite 2400
Chicago, Illinois 60601
312-565-0450 Job No. 10061

FILE NAME = 081-0178-C00AB-005-General Plan and Elevation - Unit 4.dgn	USER NAME = kerryder	DESIGNED - AAY	REVISED - 5/16/17
		CHECKED - AJK	REVISED -
MODEL: Plot Sheet	PLOT SCALE =	DRAWN - VH	REVISED -
	PLOT DATE = 5/30/2017	CHECKED - AJK	REVISED -

STATE OF ILLINOIS
DEPARTMENT OF TRANSPORTATION

GENERAL PLAN AND ELEVATION – UNIT 4
STRUCTURE NO. 081-0178 (EASTBOUND)
SHEET NO. S5 OF S138 SHEETS

F.A.I. RTE.	SECTION	COUNTY	TOTAL SHEETS	SHEET NO.
74	81-1HVBR	ROCK ISLAND	1504	894
		CONTRACT NO. 64C08		
		ILLINOIS FED. AID PROJECT		

5/30/2017 8:13:37 AM c:\pwise_work\do_not_delete\dms02467\081-0178-C00AB-005-General Plan and Elevation - Unit 4.dgn

GENERAL NOTES

1. Fasteners shall be ASTM A325 Type 1, mechanically galvanized bolts. Bolts $^{7}/_{8}$", open holes $^{15}/_{16}$", unless otherwise noted.

2. Calculated weight of Structural Steel = 6,811,000 lbs
   M 270 Grade 36: 281,000 lbs
   M 270 Grade 50: 6,530,000 lbs

   The Contractor may substitute Grade 50 for Grade 36 at no additional cost to the Contract.

3. No field welding is permitted except as specified in the contract documents.

4. Reinforcement bars designated (E) shall be epoxy coated.

5. If the Contractor elects to use cantilever forming brackets on the exterior beams or girders, the brackets shall be placed at the same locations as required for the hardwood blocks in Article 503.06(b) of the Standard Specifications. If additional cantilever forming brackets are required, hardwood blocking shall be wedged between the exterior and first interior beam at each of these additional bracket locations.

6. Bearing seat surfaces shall be constructed or adjusted to the designated elevations within a tolerance of 1/8 in. (0.01 ft.). Adjustment shall be made either by grinding the surface or by shimming the bearings.

7. Concrete Sealer shall be applied to the exposed faces of Piers 2, 5 and 8 and the North and South Abutments. Concrete sealer shall be applied to the exposed column faces of the pier columns of Piers 6 and 7. △1

8. The Organic Zinc Rich Primer / Epoxy / Urethane Paint System shall be used for painting of new structural steel except where otherwise noted. The entire system shall be shop applied, with the exception of the exterior surfaces and the bottom of the bottom flange of fascia beams, masked off connection surfaces, and field installed fasteners, all of which shall be touched up and finish coated in the field. The color of the final finish coat for all interior steel surfaces shall be Gray, Munsell No. 5B 7/1.

   The exterior and bottom flange of the fascia beams and fascia bearings shall be finish coated with a fluoropolymer paint. The color of the final finish coat for the exterior and bottom flange of the fascia beams and bearings shall be Federal Standard 595C Color 26099 (gray-blue). See Special Provision for "Cleaning and Painting Structural Steel".

9. See Civil Plans for limits of special waste.

10. The embankment configuration shown shall be the minimum that must be placed and compacted prior to construction of the abutments.

11. Slip forming of the median parapet is not allowed. Slip forming of the West Traffic Barrier is allowed.

12. The Contractor shall use self-consolidating concrete (SCC) in all the pier columns. The self-consolidating concrete shall conform to all requirements as specified in Section 1020 of the Standard Specifications. Cost of SCC shall be included with the cost of Concrete Structures.

INDEX OF SHEETS

TOTAL BILL OF MATERIAL

	ITEM	UNIT	SUPER	SUB	TOTAL
	Protective Shield	Sq Yd	1,324	-	1,324
	Structure Excavation	Cu Yd	-	2,367	2,367
	Concrete Structures	Cu Yd	-	2,207.3	2,207.3
	Concrete Superstructure	Cu Yd	4,754.3	-	4,754.3
	Bridge Deck Grooving	Sq Yd	15,829	-	15,829
	Concrete Encasement	Cu Yd	-	7.6	7.6
	Protective Coat	Sq Yd	18,131	-	18,131
*	Furnishing and Erecting Structural Steel	L Sum	0.50	-	0.50
	Stud Shear Connectors	Each	49,291	-	49,291
	Reinforcement Bars, Epoxy Coated	Pound	1,315,680	501,820	1,817,500
	Bar Splicers	Each	150	17	167
	Slope Wall 4 Inch	Sq Yd	-	420	420
	Furnishing Steel Piles HP14x73	Foot	-	3,293	3,293
	Furnishing Steel Piles HP14x89	Foot	-	2,612	2,612
	Driving Piles	Foot	-	5,905	5,905
	Test Pile Steel HP14x73	Each	-	7	7
	Test Pile Steel HP14x89	Each	-	5	5
	Pile Shoes	Each	-	320	320
	Name Plates	Each	1	-	1
	Preformed Joint Strip Seal	Foot	153.5	-	153.5
	Finger Plate Expansion Joint, 3"	Foot	74.0	-	74.0
	Finger Plate Expansion Joint, 4"	Foot	76.0	-	76.0
	Finger Plate Expansion Joint, 5"	Foot	66.5	-	66.5
	Elastomeric Bearing Assembly, Type I	Each	31	-	31
	Elastomeric Bearing Assembly, Type II	Each	34	-	34
	Anchor Bolts, 1"	Each	-	442	442
	Concrete Sealer	Sq Ft	-	12,523	12,523
	Geocomposite Wall Drain	Sq Yd	-	111	111
	High Load Multi-Rotational Bearings, Guided Expansion, 300K	Each	13	-	13
	High Load Multi-Rotational Bearings, Guided Expansion, 500K	Each	17	-	17
	High Load Multi-Rotational Bearings, Guided Expansion, 600K	Each	9	-	9
	High Load Multi-Rotational Bearings, Fixed - 600K	Each	9	-	9
	High Load Multi-Rotational Bearings, Fixed - 650K	Each	22	-	22
	High Load Multi-Rotational Bearings, Fixed - 700K	Each	8	-	8
	Granular Backfill For Structures	Cu Yd	-	266	266
	Steel Railing (Special)	Foot	1,972	-	1,972
	Drainage Scuppers (Special)	Each	9	-	9
*	Drainage System	L Sum	-	0.4	0.4
	Modular Expansion Joint-Swivel 6"	Foot	34.0	-	34.0
	Pipe Underdrains For Structures 4"	Foot	-	106.0	106.0

* Remainder of this item installed with other structures in the Contract

benesch
Alfred Benesch & Company
205 North Michigan Avenue, Suite 2400
Chicago, Illinois 60601
312-565-0450 Job No. 10061

FILE NAME = ...\081-0178-C80AB-006-General notes, Index of Sheets and Total Bill of Material.dgn	USER NAME = $USER$	DESIGNED - DTS	REVISED - △1 5/16/17
		CHECKED - AJK	REVISED -
MODEL: $MODEL	PLOT SCALE =	DRAWN - VH	REVISED -
	PLOT DATE = 5/27/2017	CHECKED - AJK	REVISED -

STATE OF ILLINOIS
DEPARTMENT OF TRANSPORTATION

GENERAL NOTES, INDEX OF SHEETS AND TOTAL BILL OF MATERIAL
STRUCTURE NO. 081-0178 (EASTBOUND)
SHEET NO. S6 OF S138 SHEETS

F.A.I. RTE.	SECTION	COUNTY	TOTAL SHEETS	SHEET NO.
74	81-1HVBR	ROCK ISLAND	1504	895
		CONTRACT NO. 64C08		
		ILLINOIS FED. AID PROJECT		

5/27/2017 1:03:24 AM 081-0178-C80AB-006-General notes, Index of Sheets and Total Bill of Material.dgn

GENERAL NOTES

1. Fasteners shall be ASTM A325 Type 1, mechanically galvanized bolts. Bolts $^{7}/_{8}$" ϕ, holes $^{15}/_{16}$" ϕ, unless otherwise noted.

2. Calculated weight of Structural Steel = 720,080 lbs
   M 270 Grade 36: 39,090 lbs
   M 270 Grade 50: 680,990 lbs

3. No field welding is permitted except as specified in the contract documents.

4. Reinforcement bars designated (E) shall be epoxy coated.

5. If the Contractor elects to use cantilever forming brackets on the exterior beams or girders, the brackets shall be placed at the same locations as required for the hardwood blocks in Article 503.06(b) of the Standard Specifications. If additional cantilever forming brackets are required, hardwood blocking shall be wedged between the exterior and first interior beam at each of these additional bracket locations.

6. Bearing seat surfaces shall be constructed or adjusted to the designated elevations within a tolerance of 1/8 in. (0.01 ft.). Adjustment shall be made either by grinding the surface or by shimming the bearings.

7. Concrete Sealer shall be applied to the exposed faces of the pier 2 and the South Abutment. Concrete Sealer shall be applied to the exposed faces of the Pier 3C columns. △1

8. The Organic Zinc Rich Primer / Epoxy / Urethane Paint System shall be used for painting of new structural steel except where otherwise noted. The entire system shall be shop applied, with the exception of the exterior surface and the bottom of the bottom flange of fascia beams, masked off connection surfaces, and field installed fasteners, all of which shall be touched up and finish coated in the field. The color of the final finish coat for all interior steel surfaces shall be Gray, Munsell No. 5B 7/1.

   The exterior and bottom flange of the fascia girders and fascia bearings shall be finish coated with fluoropolymer paint. The color of the final finish coat for the exterior and bottom flange of the fascia girders and bearings shall be Federal Standard 595C Color 26099 (gray-blue). See Special Provision for "Cleaning and Painting Structural Steel."

9. Slip forming of the parapet is allowed. See sheet SC10 for details.

10. The Contractor shall use self-consolidating concrete (SCC) in all the pier columns. The self-consolidating concrete shall conform to all requirements as specified in Section 1020 of the Standard Specifications. Cost of SCC shall be included with the cost of Concrete Structures.

INDEX OF SHEETS

TOTAL BILL OF MATERIAL

	ITEM	UNIT	SUPER	SUB	TOTAL
	Protective Shield	Sq Yd	747	-	747
	Structure Excavation	Cu Yd	-	20	20
	Concrete Structures	Cu Yd	-	186.8	186.8
	Concrete Superstructure	Cu Yd	542.1	-	542.1
	Bridge Deck Grooving	Sq Yd	1,341	-	1,341
	Protective Coat	Sq Yd	1,806	-	1,806
***	Furnishing and Erecting Structural Steel	L Sum	0.05	-	0.05
	Stud Shear Connectors	Each	4,232	-	4,232
	Reinforcement Bars, Epoxy Coated	Pound	158,870	25,700	184,570
	Bar Splicers	Each	34	16	50
	Furnishing Steel Piles HP14x73	Foot	-	645.0	645.0
	Driving Piles	Foot	-	645.0	645.0
	Test Pile Steel HP14x73	Each	-	2	2
	Pile Shoes	Each	-	27	27
	Name Plates	Each	1	-	1
	Preformed Joint Strip Seal	Foot	32.0	-	32.0
	Anchor Bolts, 1"	Each	-	48	48
	Concrete Sealer	Sq Ft	-	1,192	1,192
	High Load Multi-Rotational Bearings, Guided Expansion, 300K	Each	8	-	8
	High Load Multi-Rotational Bearings, Fixed - 750K	Each	4	-	4
	Steel Railing (Special)	Foot	799	-	799
	Drainage Scuppers (Special)	Each	2	-	2
***	Drainage System	L Sum	-	0.10	0.10

*** Remainder of this item is installed with other structures in the Contract

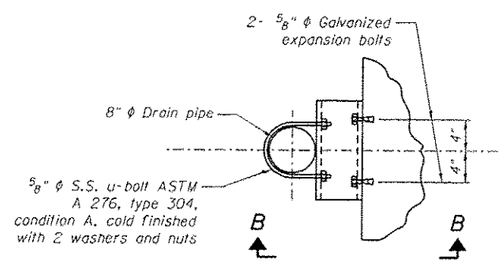

SECTION A-A

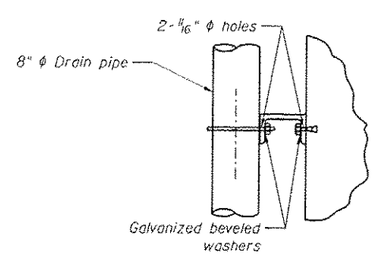

VIEW B-B

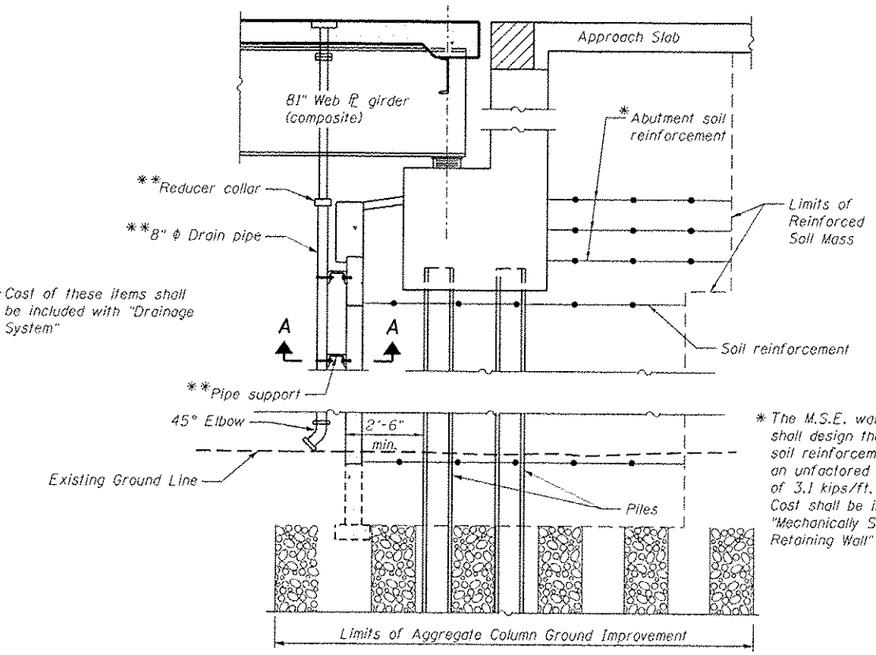

**Cost of these items shall be included with "Drainage System"

* The M.S.E. wall supplier shall design the abutment soil reinforcement to resist an unfactored horizontal force of 3.1 kips/ft. of abutment. Cost shall be included with "Mechanically Stabilized Earth Retaining Wall"

TYPICAL WALL SECTION THRU ABUTMENT

(See retaining wall SN-081-6019 plans for MSE wall details and pay items)

benesch
Alfred Benesch & Company
205 North Michigan Avenue, Suite 2400
Chicago, Illinois 60601
312-565-0450 Job No. 10061

FILE NAME = ...\081ø186-A0323-002-General Notes.dgn	USER NAME = #USER#	DESIGNED - RJT	REVISED - △1 5/16/17
MODEL: #MODEL		CHECKED - AJK	REVISED -
	PLOT SCALE =	DRAWN - KMS	REVISED -
	PLOT DATE = 5/27/2017	CHECKED - AJK	REVISED -

STATE OF ILLINOIS
DEPARTMENT OF TRANSPORTATION

GENERAL NOTES, INDEX OF SHEETS AND TOTAL BILL OF MATERIAL
STRUCTURE NO. 081-0186 RAMP 6TH-C

SHEET NO. SC2 OF SC39 SHEETS

F.A.I. RTE.	SECTION	COUNTY	TOTAL SHEETS	SHEET NO.
74	81-1HVBR	ROCK ISLAND	1504	1029

CONTRACT NO. 64C08

ILLINOIS FED. AID PROJECT

081ø186-A0323-002-General Notes.dgn 1:05:06 AM 5/27/2017

GENERAL NOTES

1. Reinforcement bars designated (E) shall be epoxy coated.
2. Wall stations and offsets are given to the front face (FF) of the wall and are measured from the Ramp RD-H baseline, except as noted. FF of the wall is to be considered edge of panel or form liner.
3. See Special Provision for Mechanically Stabilized Earth Retaining Walls for design and construction requirements.
4. Wall construction shall not begin until after ground improvement for the unsuitable material and debris has been completed in the area of the new walls.

MSE WALL SETTLEMENT

1. The Top of Exposed Panel Elevations shown on these plans are final elevations after any settlement. The MSE wall supplier is alerted to to the fact that 4.0 inches of settlement are anticipated from Sta. 212+65.90 to Sta. 217+43.34 and shall take appropriate measures to accommodate the settlement in the wall design.

CONTRACTOR COORDINATION REQUIREMENTS

"Contractor" (responsible for construction of SN 081-6010) shall coordinate with "Bridge Contractor" (responsible for construction of the River Approach Bridge in a separate contract). Construction of the wall near the bridge abutment shall follow the steps outlined below:

CONSTRUCTION SEQUENCE

1. Contractor shall construct complete Rock Fill ground improvement within the limits shown in the plans or as directed by the Engineer.
2. Contractor shall construct MSE wall and place backfill up to the elevation of the bottom of abutment and wingwalls. Note that the abutment and wingwalls are adjacent to, but outside the limits of the MSE wall.
3. Bridge Contractor shall drive piles and construct abutment, wingwalls, and maskwalls.
4. Contractor shall resume and complete construction of MSE Walls, placement of backfill, and construction of coping.

TOTAL BILL OF MATERIAL

ITEM	UNIT	TOTAL
Structure Excavation	Cu. Yd.	270
Removal and Disposal of Unsuitable Material for Structures	Cu. Yd.	177
Concrete Superstructure	Cu. Yd.	263.7
Protective Coat	Sq. Yd.	603
Reinforcement Bars, Epoxy Coated	Pound	40,120
Name Plates	Each	1
Mechanically Stabilized Earth Retaining Wall	Sq. Ft.	5,612
Rock Fill	Cu. Yd.	243

1

STATION 212+65.90
BUILT 201_ BY
STATE OF ILLINOIS
F.A.I. RT. 74
SEC. (81-1)R & 81-1HVBR
LOADING HS-20
STR. NO. 081-6010

NAME PLATE
See Std. 515001

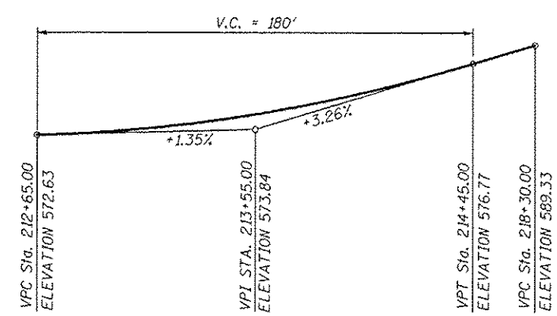

PROFILE GRADE
(Along ℄ Ramp RD-H)

MODJESKI and MASTERS Experience great bridges.	USER NAME =	DESIGNED - YSS	REVISED 1 5/16/2017 JMH
		CHECKED - JMH	REVISED
	PLOT SCALE =	DRAWN - MLA	REVISED
	PLOT DATE = 1/20/2017	CHECKED - YSS	REVISED

STATE OF ILLINOIS
DEPARTMENT OF TRANSPORTATION

GENERAL NOTES
RAMP RD-H RETAINING WALL 01
STRUCTURE NO. 081-6010
SHEET NO. 2 OF 15 SHEETS

F.A.I. RTE.	SECTION	COUNTY	TOTAL SHEETS	SHEET NO.
74	(81-1)R & 81-1HVBR	ROCK ISLAND	1504	1112

CONTRACT NO. 64C08
ILLINOIS FED. AID PROJECT

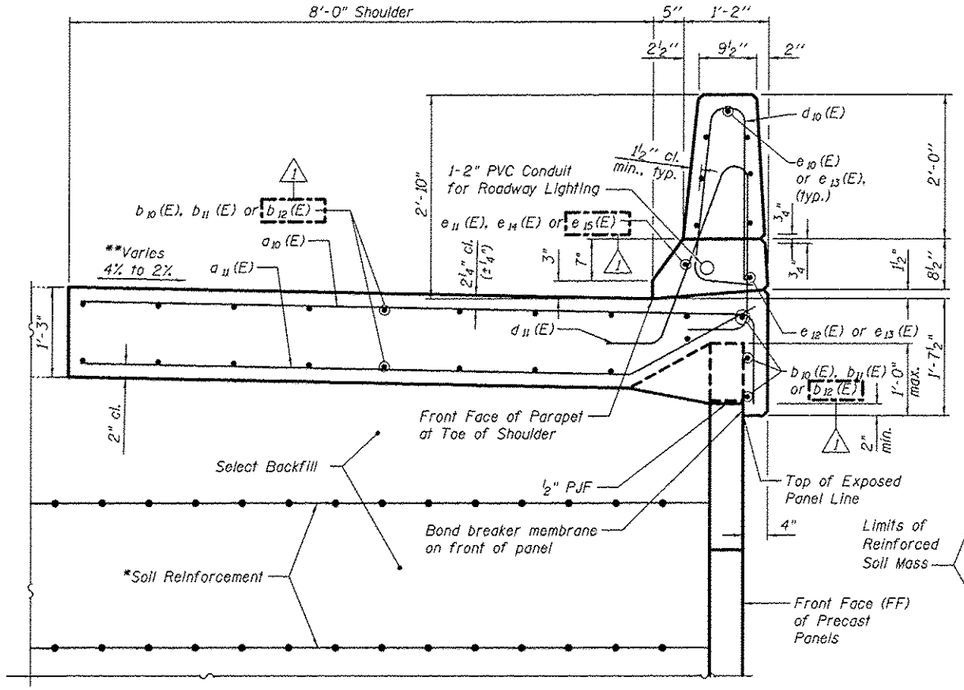

SECTION THRU PARAPET AND ANCHORAGE SLAB

** At ℄ Ramp RD-H,
Sta. 212+65.90 to Sta. 216+87.00 Cross Slope = 4%
Sta. 216+87.00 to Sta. 217+27.00 Cross Slope Transition
Sta. 217+27.00 to Sta. 217+43.34 Cross Slope = 2%

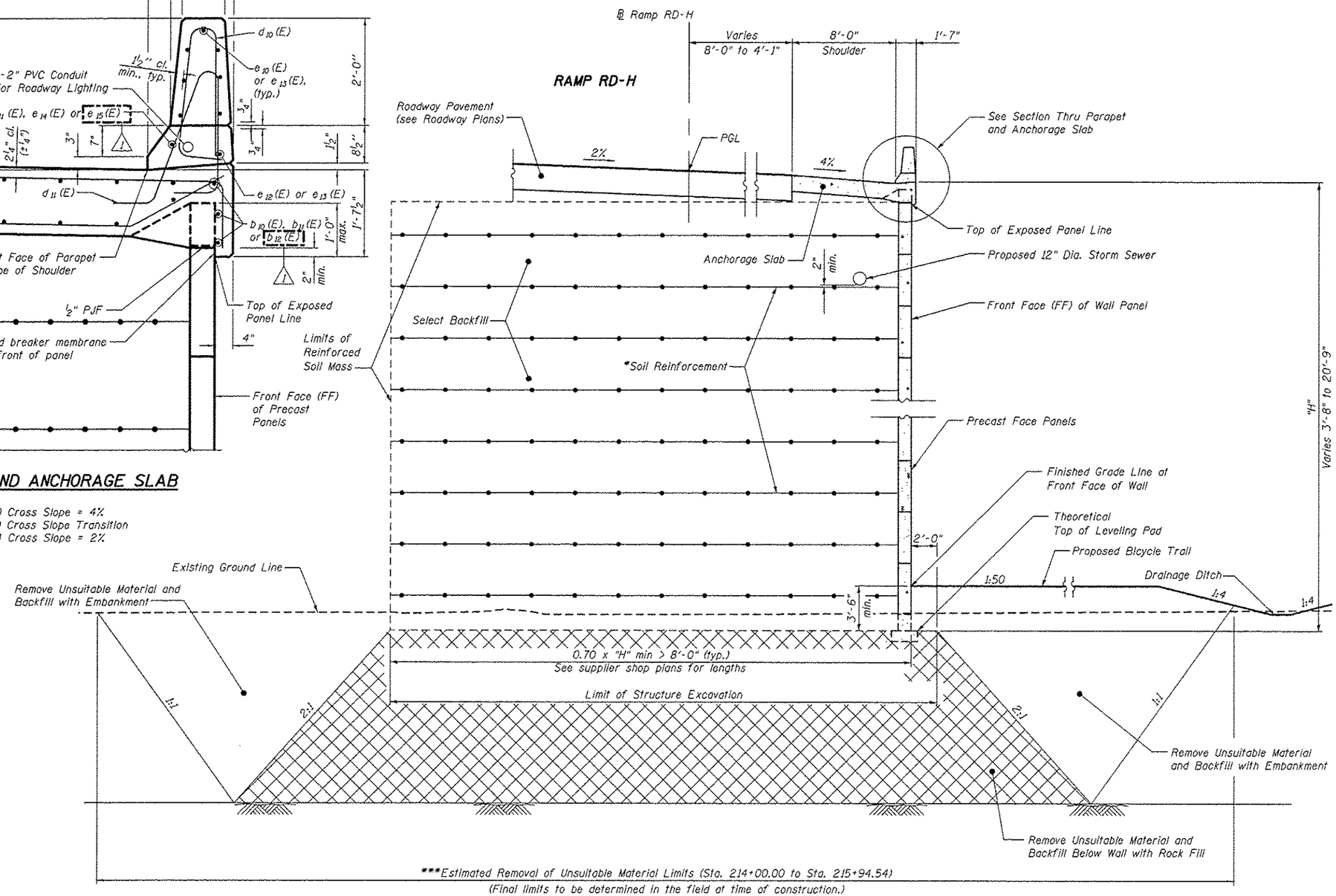

TYPICAL WALL SECTION

Sta. 212+65.90 to Sta. 216+71.36

*** See Roadway Plans for Estimated Removal of Buried Debris Limits from Sta. 215+94.54 to Sta. 216+71.36

Note:

*The M.S.E. wall supplier's internal stability design shall account for the anchorage slab's bearing pressure surcharge of 1.0 ksf and horizontal sliding force of 0.5 kips/ft. of wall.

MODJESKI and MASTERS	USER NAME =	DESIGNED - YSS	REVISED 1 5/16/2017 JMH	STATE OF ILLINOIS DEPARTMENT OF TRANSPORTATION	MSE DETAILS 1 RAMP RD-H RETAINING WALL 01 STRUCTURE NO. 081-6010	F.A.I. RTE.	SECTION	COUNTY	TOTAL SHEETS / SHEET NO.
		CHECKED - ZJB	REVISED			74	(81-1)R & 81-1HVBR	ROCK ISLAND	1504 / 1113
	PLOT SCALE =	DRAWN - MLA	REVISED					CONTRACT NO. 64C08	
	PLOT DATE = 1/20/2017	CHECKED - YSS	REVISED		SHEET NO. 3 OF 15 SHEETS			ILLINOIS FED. AID PROJECT	

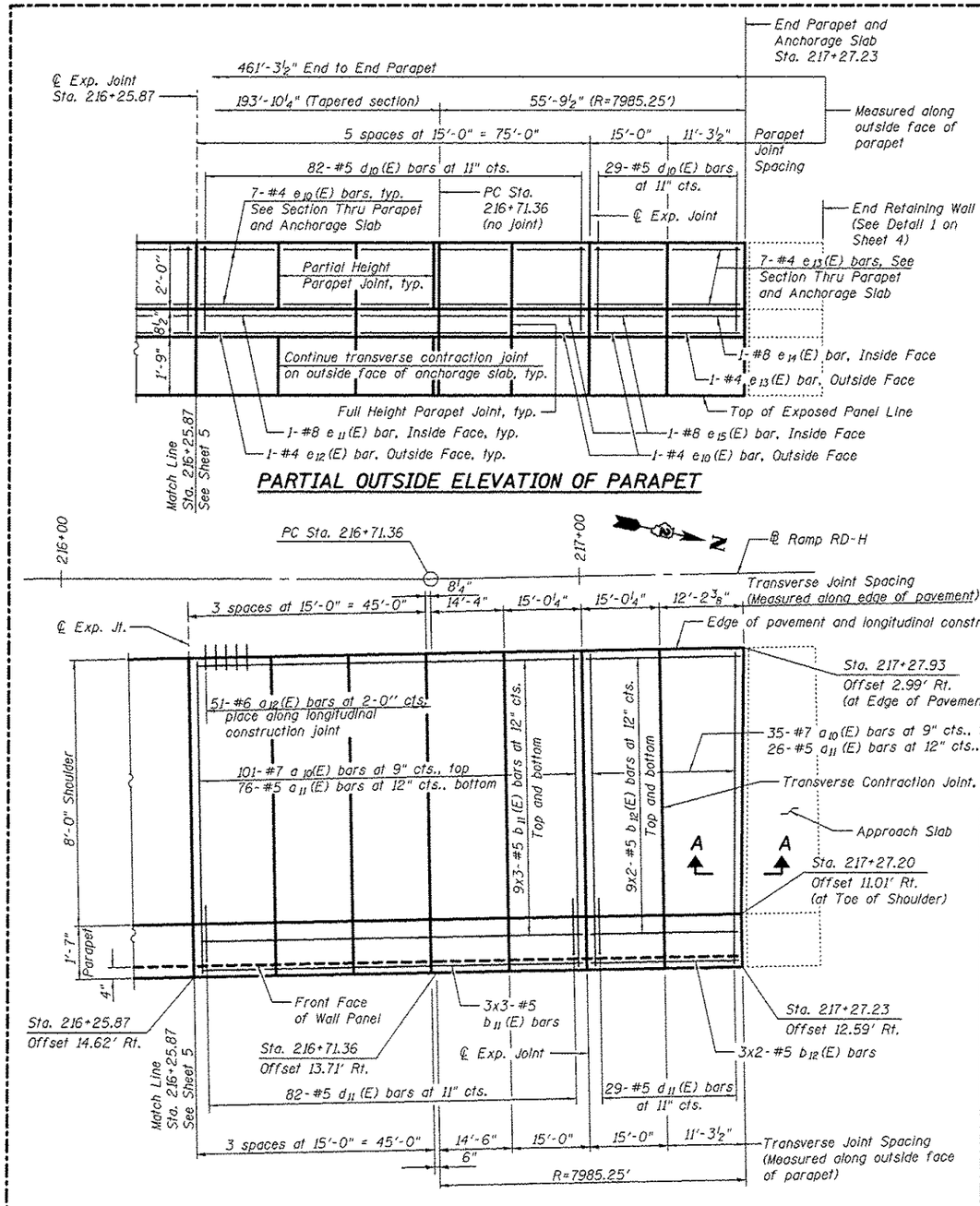

PARTIAL OUTSIDE ELEVATION OF PARAPET

PARTIAL PLAN - PARAPET AND ANCHORAGE SLAB

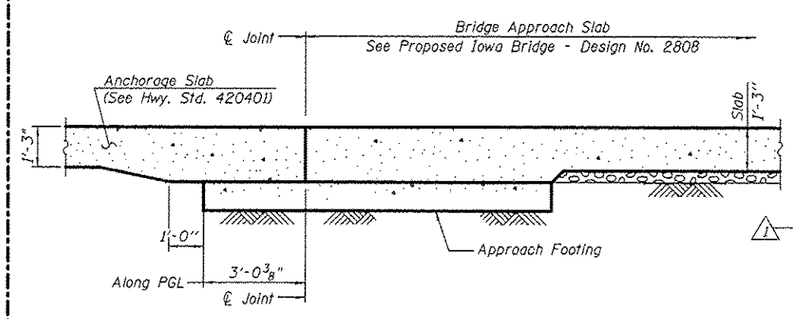

SECTION A-A

RETAINING WALL 01
BILL OF MATERIAL

Bar	No.	Size	Length	Shape
a10(E)	616	#7	10'-6"	
a11(E)	462	#5	9'-6"	
a12(E)	232	#6	2'-0"	
a13(E)	16	#5	2'-0"	
a14(E)	3	#6	5'-0"	
a15(E)	3	#6	7'-11"	
b10(E)	294	#5	28'-9"	
b11(E)	63	#5	27'-3"	
b12(E)	42	#5	15'-2"	
d10(E)	504	#5	5'-7"	
d11(E)	504	#5	6'-10"	
d12(E)	3	#6	4'-5"	
d13(E)	5	#6	8'-11"	
e10(E)	212	#4	14'-9"	
e11(E)	14	#8	29'-9"	
e12(E)	14	#4	29'-9"	
e13(E)	8	#4	11'-0"	
e14(E)	1	#8	11'-0"	
e15(E)	2	#8	14'-9"	
Reinforcement Bars, Epoxy Coated			Pound	40,120
Concrete Superstructure			Cu. Yd.	263.7

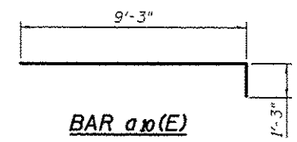

BAR a10(E)

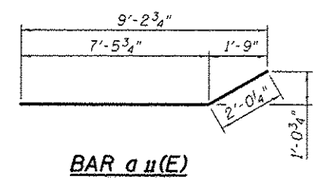

BAR a11(E)

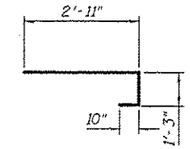

BAR a14(E)

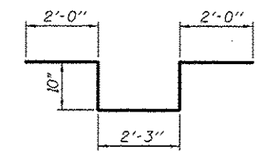

BAR a15(E)

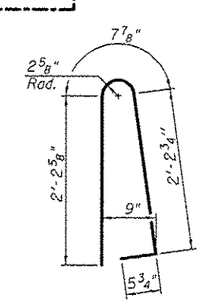

BAR d10(E)

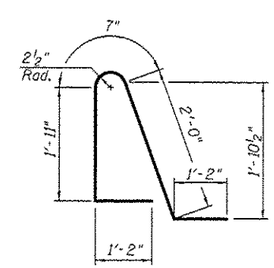

BAR d11(E)

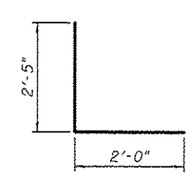

BAR d12(E)

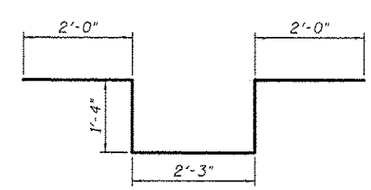

BAR d13(E)

MIN. BAR LAP

#5 bars - 3'-3"

Notes:

For Section Thru Parapet and Anchorage Slab, see Sheet 3.

Bars indicated thus 9x4-#5 etc. indicates 9 lines of bars with 4 lengths per line.

Joints in the adjacent pavement shall be aligned with the anchorage slab joints.

Stations and offsets on this sheet are given to the outside face of the parapet and are measured from the Ramp RD-H baseline, except as noted.

See Sheet 7 for Light Pole Blister reinforcement.

MODJESKI and MASTERS Experience great bridges.	USER NAME =	DESIGNED - YSS	REVISED 1 5/16/2017 JMH
		CHECKED - ZJB	REVISED
	PLOT SCALE =	DRAWN - MLA	REVISED
	PLOT DATE = 1/20/2017	CHECKED - YSS	REVISED

STATE OF ILLINOIS
DEPARTMENT OF TRANSPORTATION

PARAPET AND ANCHORAGE SLAB 2
RAMP RD-H RETAINING WALL 01
STRUCTURE NO. 081-6010

SHEET NO. 6 OF 15 SHEETS

F.A.I. RTE.	SECTION	COUNTY	TOTAL SHEETS	SHEET NO.
74	(81-1)R & 81-1HVBR	ROCK ISLAND	1504	1116

CONTRACT NO. 64C08

ILLINOIS FED. AID PROJECT

GENERAL NOTES

1. Reinforcement bars designated (E) shall be epoxy coated.
2. Wall stations and offsets are given to the front face (FF) of the wall and are measured from the Ramp 6TH-D baseline, except as noted. FF of the wall is to be considered edge of panel or form liner.
3. See Special Provision for Mechanically Stabilized Earth Retaining Walls and Aggregate Column Ground Improvement for design and construction requirements.
4. For existing soils laboratory data, see the Geotechnical Investigation Laboratory Data Special Provision.
5. The piles for SN 081-0187 are located within the reinforced soil mass. See SN 081-0187 plans for additional pile requirements.
6. Wall system supplier shall coordinate proposed wall configuration with Aggregate Column Ground Improvement subcontractor.
7. Wall construction shall not begin until after Aggregate Column Ground Improvement has been completed in the area of the new wall.
8. Obstructions such as old foundations, pavements, utilities, etc. that are within the area to be treated with Aggregate Column Ground Improvement shall be removed by others.
9. See SN 081-0187 plans for maskwall details.

GROUND IMPROVEMENT PERFORMANCE REQUIREMENTS

1. Minimum factor of safety for global slope stability shall be 1.5.
2. Allowable bearing pressure (with F.S.) shall be equal to or greater than the equivalent uniform service bearing pressure of 5000 psf.

   Minimum factor of safety against equivalent uniform service bearing pressure shall be 2.0 if a load test is performed.

   Minimum factor of safety against equivalent uniform service bearing pressure shall be 2.5 if a load test is not performed.
3. Total settlement measured at the theoretical top of leveling pad shall not exceed 4.0 inches.
4. Total settlement measured on the pavement shall not exceed 1.0 inch.
5. Differential settlement measured along the theoretical top of leveling pad shall not exceed 1/100.
6. The assumed structure life for settlement computations shall be 75 years.
7. Contractor's verification program shall include monitoring points or other instrumentation to demonstrate compliance with the stated performance requirements.
8. The Shop Drawings and construction procedures submittal shall indicate the sequence of construction within the limits of Aggregate Column Ground Improvement. The aggregate column installation shall be coordinated with utility removal, structure removals, proposed utility installation, and bridge pile driving.
9. Aggregate columns shall be installed before the bridge piles are driven; however, the piles shall not be driven through the aggregate of an installed column. The aggregate column layout shall provide clearance for the bridge piles.

MSE WALL SETTLEMENT

1. The Top of Exposed Panel Elevations shown on these plans are final elevations after any settlement. The wall settlement will be determined by the ground improvement design. The wall system supplier shall coordinate with Aggregate Column Ground Improvement subcontractor to accommodate this settlement in the wall design.

TOTAL BILL OF MATERIAL

ITEM	UNIT	TOTAL
Structure Excavation	Cu. Yd.	368
Concrete Superstructure	Cu. Yd.	148.3
Protective Coat	Sq. Yd.	339
Reinforcement Bars, Epoxy Coated	Pound	22,550 △1
Name Plates	Each	1
* Aggregate Column Ground Improvement	L. Sum	0.57
Mechanically Stabilized Earth Retaining Wall	Sq. Ft.	5791

* See proposed retaining wall S.N. 081-6019 for remainder of L. Sum quantity.

STATION 422+75.00
BUILT 201_ BY
STATE OF ILLINOIS
F.A.I. RT. 74
SEC. (81-1)R & 81-1HVBR
LOADING HS-20
STR. NO. 081-6012

NAME PLATE
See Std. 515001

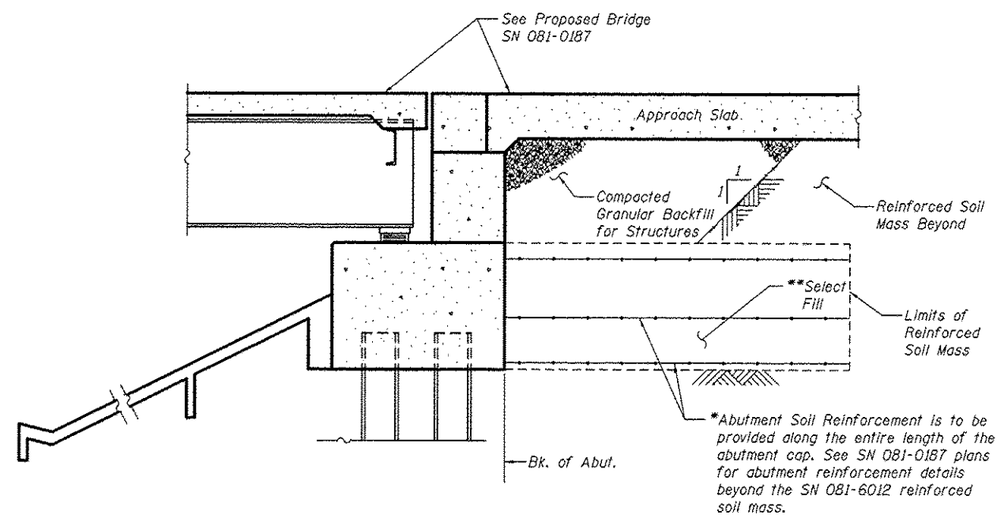

SECTION THRU PILE SUPPORTED STUB ABUTMENT

* The M.S.E. wall supplier shall design the abutment soil reinforcement to resist a horizontal force of 3.0 kips/ft of abutment. Cost shall be included with the cost of "Mechanically Stabilized Earth Retaining Wall".

** Select fill shall be placed in all areas beneath the proposed abutments regardless of the limits of the reinforced soil mass.

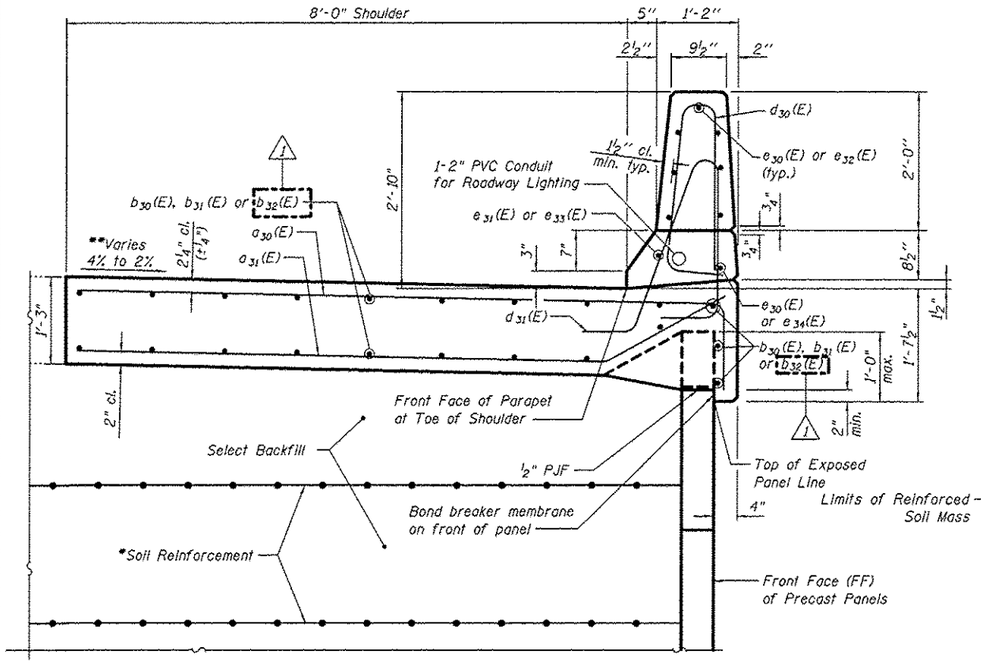

SECTION THRU PARAPET AND ANCHORAGE SLAB

** ℄ Ramp 6th-D,
Sta. 422+75.00 to Sta. 424+87.00 Cross Slope = 4%
Sta. 424+87.00 to Sta. 425+27.00 Cross Slope Transition
Sta. 425+27.00 to Sta. 426+05.05 Cross Slope = 2%

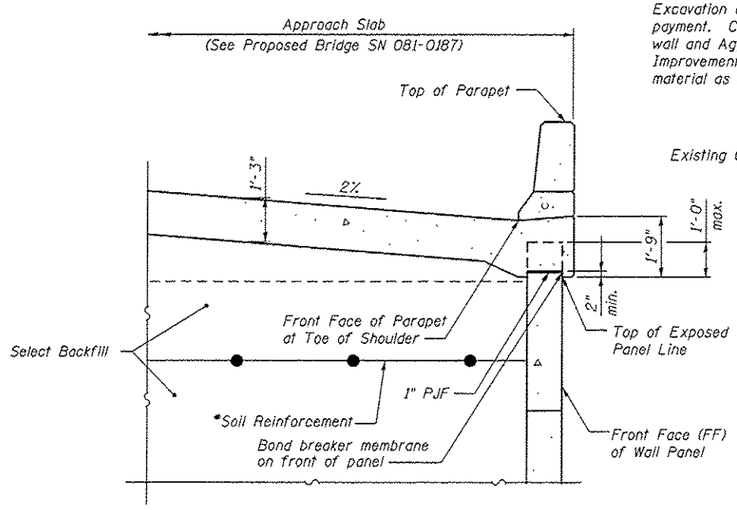

SECTION THRU PARAPET AND APPROACH SLAB

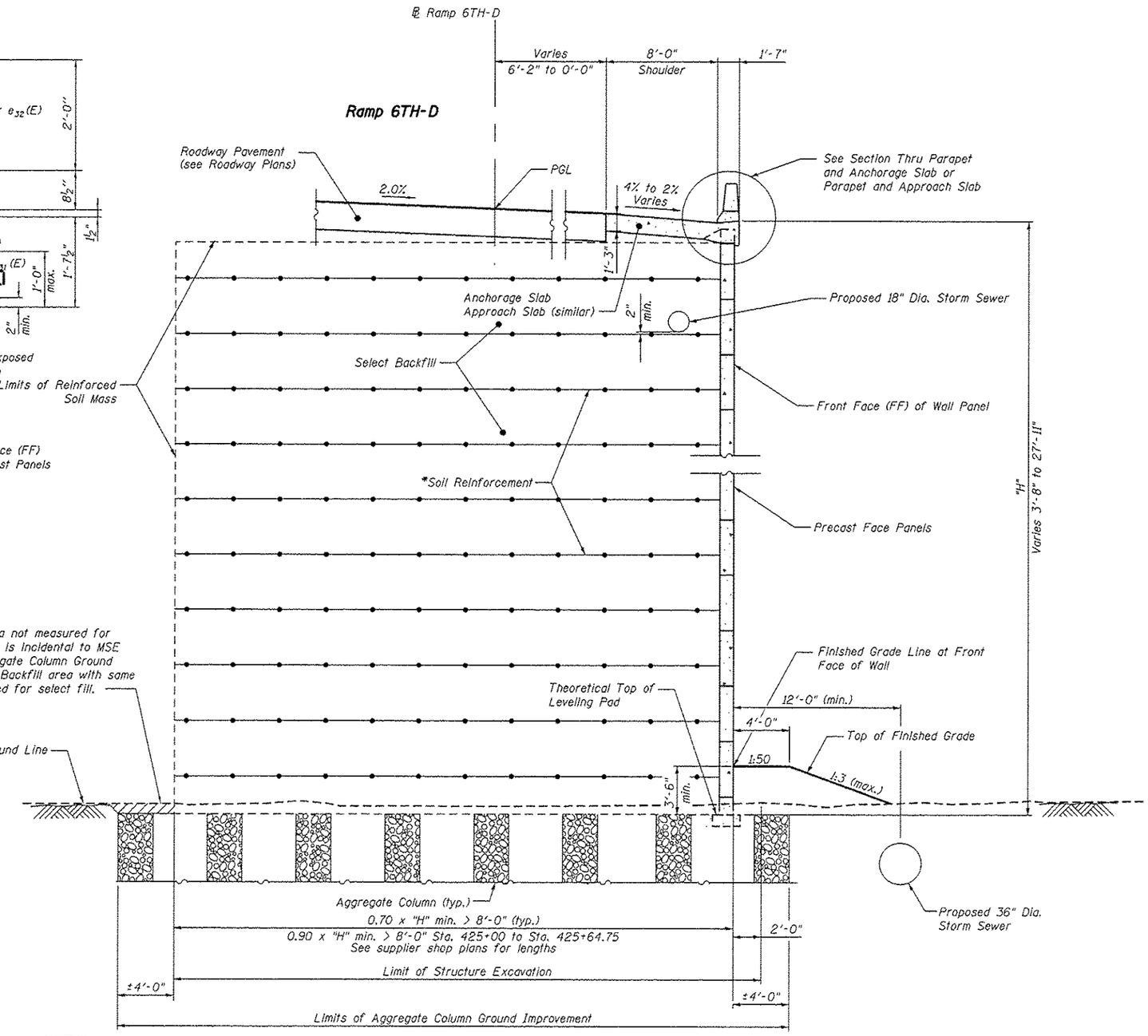

TYPICAL WALL SECTION

NOTE:

* The M.S.E. wall supplier's internal stability design shall account for the anchorage slab's bearing pressure surcharge of 1.0 ksf and horizontal sliding force of 0.5 kips/ft. of wall.

Note:
See Sheet 2 for Ground Improvement Performance Requirements.

MODJESKI and MASTERS	USER NAME =	DESIGNED - YSS	REVISED 1 5/16/2017 JMH	STATE OF ILLINOIS DEPARTMENT OF TRANSPORTATION	MSE DETAILS 1 RAMP 6TH-D RETAINING WALL 03 STRUCTURE NO. 081-6012	F.A.I. RTE.	SECTION	COUNTY	TOTAL SHEETS	SHEET NO.
		CHECKED - JMH	REVISED			74	(81-1)R & 81-1HVBR	ROCK ISLAND	1504	1140
	PLOT SCALE =	DRAWN - MLA	REVISED					CONTRACT NO. 64C08		
	PLOT DATE = 1/20/2017	CHECKED - YSS	REVISED		SHEET NO. 3 OF 11 SHEETS		ILLINOIS FED. AID PROJECT			

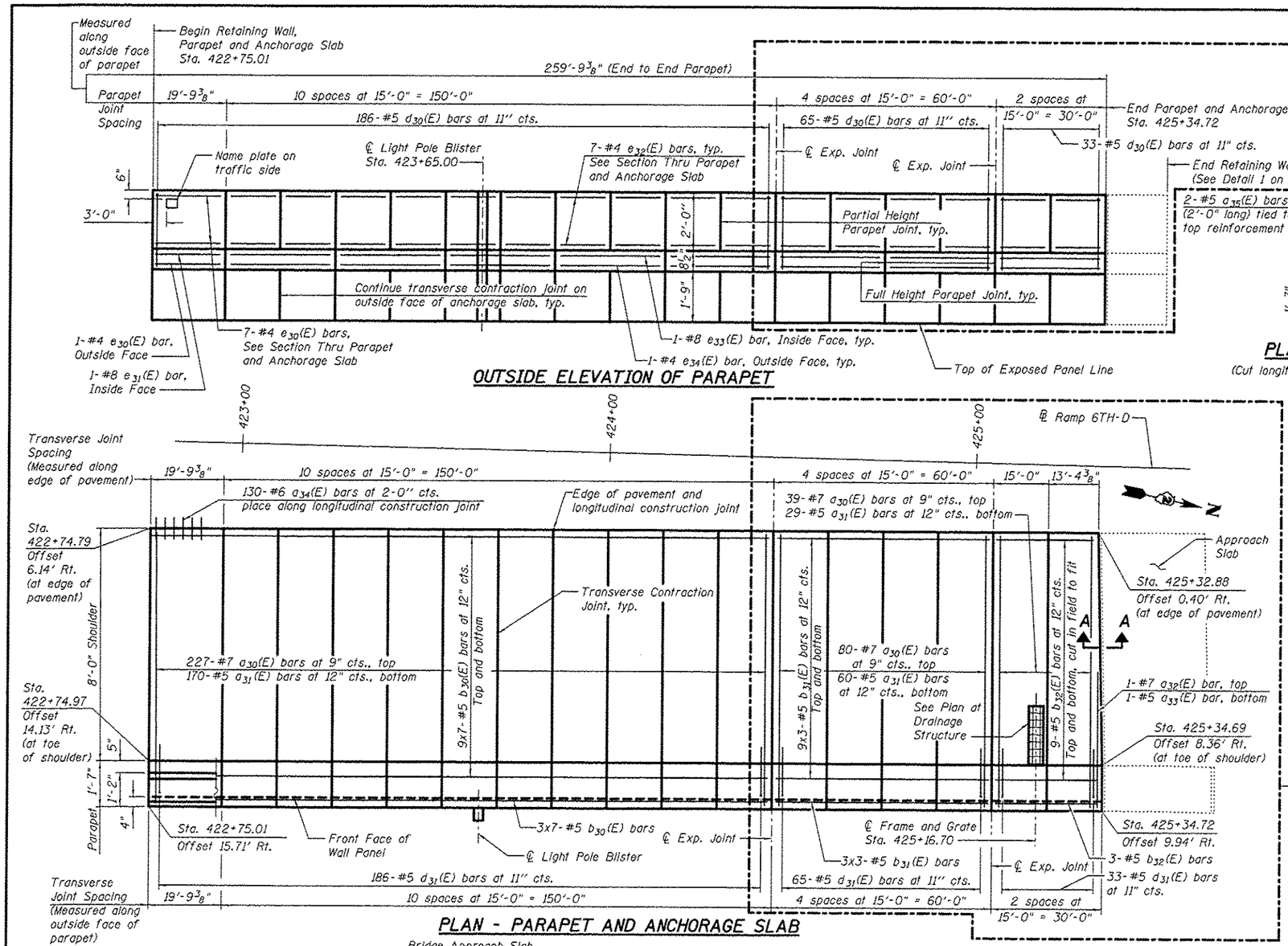

OUTSIDE ELEVATION OF PARAPET

PLAN - PARAPET AND ANCHORAGE SLAB

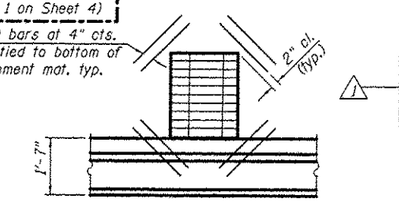

PLAN AT DRAINAGE STRUCTURE

(Cut longitudinal reinforcement to clear drainage structure)

RETAINING WALL 03 BILL OF MATERIAL

Bar	No.	Size	Length	Shape
a30(E)	346	#7	10'-6"	
a31(E)	259	#5	9'-6"	
a32(E)	1	#7	5'-0"	
a33(E)	1	#5	4'-0"	
a34(E)	130	#6	2'-0"	
a35(E)	8	#5	2'-0"	
a36(E)	3	#6	5'-0"	
a37(E)	3	#6	7'-11"	
b30(E)	147	#5	27'-0"	
b31(E)	63	#5	22'-3"	
b32(E)	21	#5	29'-9"	
d30(E)	284	#5	5'-7"	
d31(E)	284	#5	6'-10"	
d32(E)	3	#6	4'-5"	
d33(E)	5	#6	8'-11"	
e30(E)	8	#4	19'-6"	
e31(E)	1	#8	19'-6"	
e32(E)	112	#4	14'-9"	
e33(E)	8	#8	29'-9"	
e34(E)	8	#4	29'-9"	
Reinforcement Bars, Epoxy Coated			Pound	22,550
Concrete Superstructure			Cu. Yd.	148.3

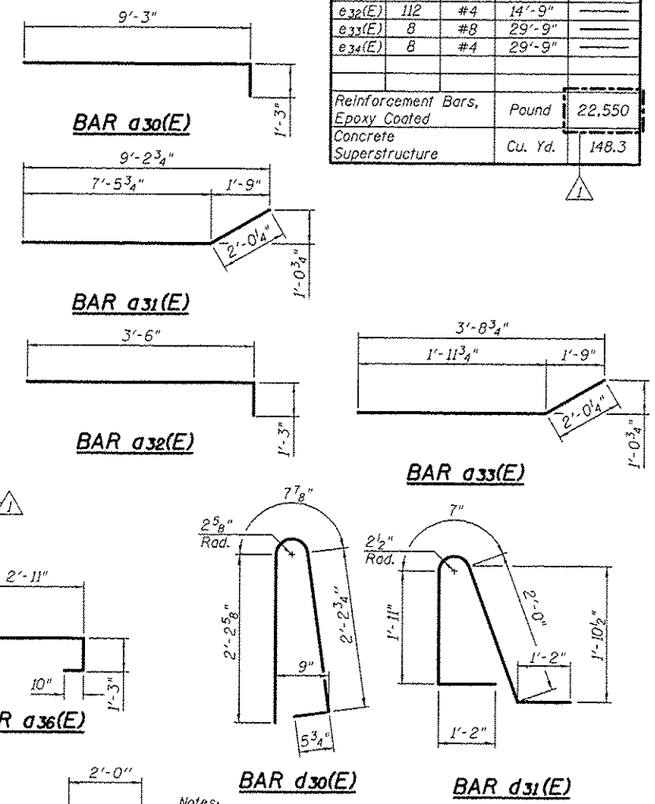

Notes:

For Section Thru Parapet and Anchorage Slab, see Sheet 3.

Bars indicated thus 9x4-#5 etc. indicates 9 lines of bars with 4 lengths per line.

Joints in the adjacent pavement shall be aligned with the anchorage slab joints.

Stations and offsets on this sheet are given to the outside face of the parapet and are measured from the Ramp 6th-D baseline, except as noted.

See Sheet 6 for Light Pole Blister reinforcement.

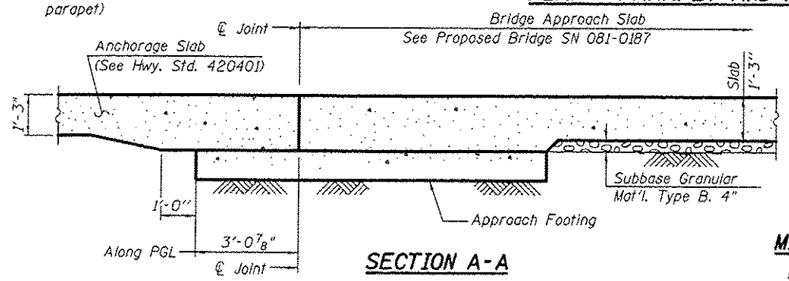

SECTION A-A

MIN. BAR LAP

#5 bars - 3'-3"

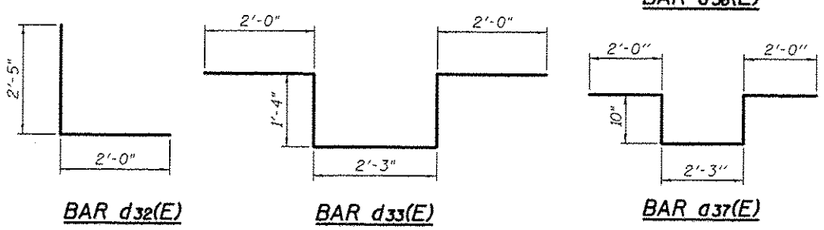

USER NAME =	DESIGNED - YSS	REVISED 1 5/16/2017 JMH	
	CHECKED - ZJB	REVISED	
PLOT SCALE =	DRAWN - MLA	REVISED	
PLOT DATE = 1/20/2017	CHECKED - YSS	REVISED	

MODJESKI and MASTERS — Experience great bridges.

STATE OF ILLINOIS
DEPARTMENT OF TRANSPORTATION

PARAPET AND ANCHORAGE SLAB
RAMP 6TH-D RETAINING WALL 03
STRUCTURE NO. 081-6012

SHEET NO. 5 OF 11 SHEETS

F.A.I. RTE.	SECTION	COUNTY	TOTAL SHEETS	SHEET NO.
74	(B1-1)R & B1-1HVBR	ROCK ISLAND	1504	1142

CONTRACT NO. 64C08

ILLINOIS FED. AID PROJECT

GENERAL NOTES

1. Reinforcement bars designated (E) shall be epoxy coated.
2. Wall stations and offsets are given to the front face (FF) of the wall and are measured from the Centerline F.A.I Route 74 and Ramp 6th-C baseline, except as noted. FF of the wall is to be considered edge of panel or form liner.
3. See Special Provision for Mechanically Stabilized Earth Retaining Walls for design and construction requirements.
4. Wall construction shall not begin until after ground improvement for the buried debris has been completed in the area of the new wall.
5. Slipforming of the aesthetic parapet is permitted.

MSE WALL SETTLEMENT

1. The Top of Exposed Panel Elevations shown on these plans are final elevations after any settlement. The wall system supplier shall take appropriate measures to accommodate the 0 to 5 inches of settlement that are anticipated from Sta. 25+75.00 to Sta. 322+81.72.

TOTAL BILL OF MATERIAL

ITEM	UNIT	TOTAL
Concrete Superstructure	Cu. Yd.	193.5
Protective Coat	Sq. Yd.	391
Reinforcement Bars, Epoxy Coated	Pound	40,240
Name Plates	Each	1
Steel Railing (Special)	Ft.	355
Mechanically Stabilized Earth Retaining Wall	Sq. Ft.	2,853

1

STATION 25+75.00
BUILT 201_ BY
STATE OF ILLINOIS
F.A.I. RT. 74
SEC. (81-1)R & 81-1HVBR
LOADING HS-20
STR. NO. 081-6018

NAME PLATE
See Std. 515001

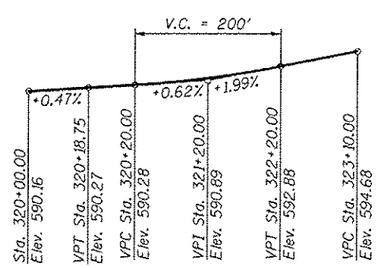

PROFILE GRADE
(Along ℄ Ramp 6th-C)

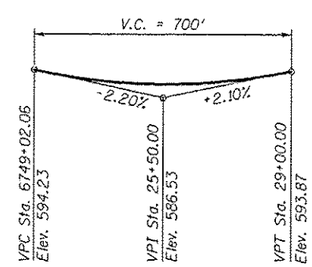

PROFILE GRADE
(Along ℄ Proposed F.A.I. Route 74)

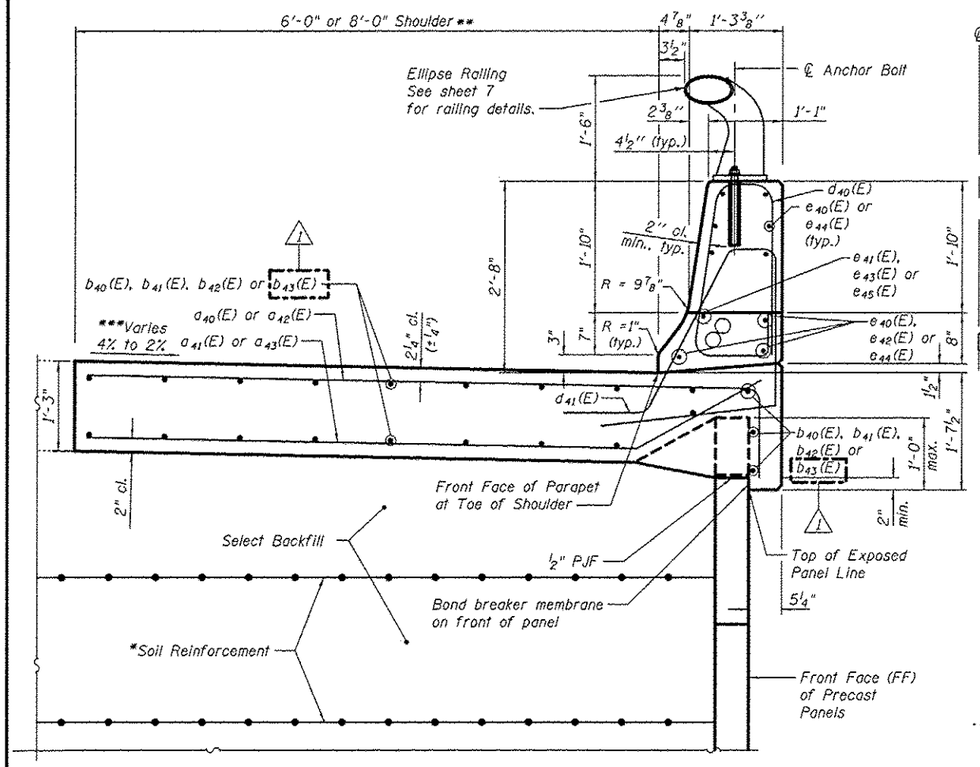

SECTION THRU PARAPET AND ANCHORAGE SLAB

** At Front Face of Wall.
Sta. 25+75.00 to Sta. 320+75.25, Anchor Slab Width = 6'-0"
Sta. 320+75.25 to Sta. 322+81.72, Anchor Slab Width = 8'-0"

*** At ℄ Ramp 6th-C,
Sta. 25+75.00 to Sta. 320+08.42 Cross Slope = 4%
Sta. 320+08.42 to Sta. 320+68.36 Cross Slope Transition
Sta. 320+68.36 to Sta. 322+81.72 Cross Slope = 2%

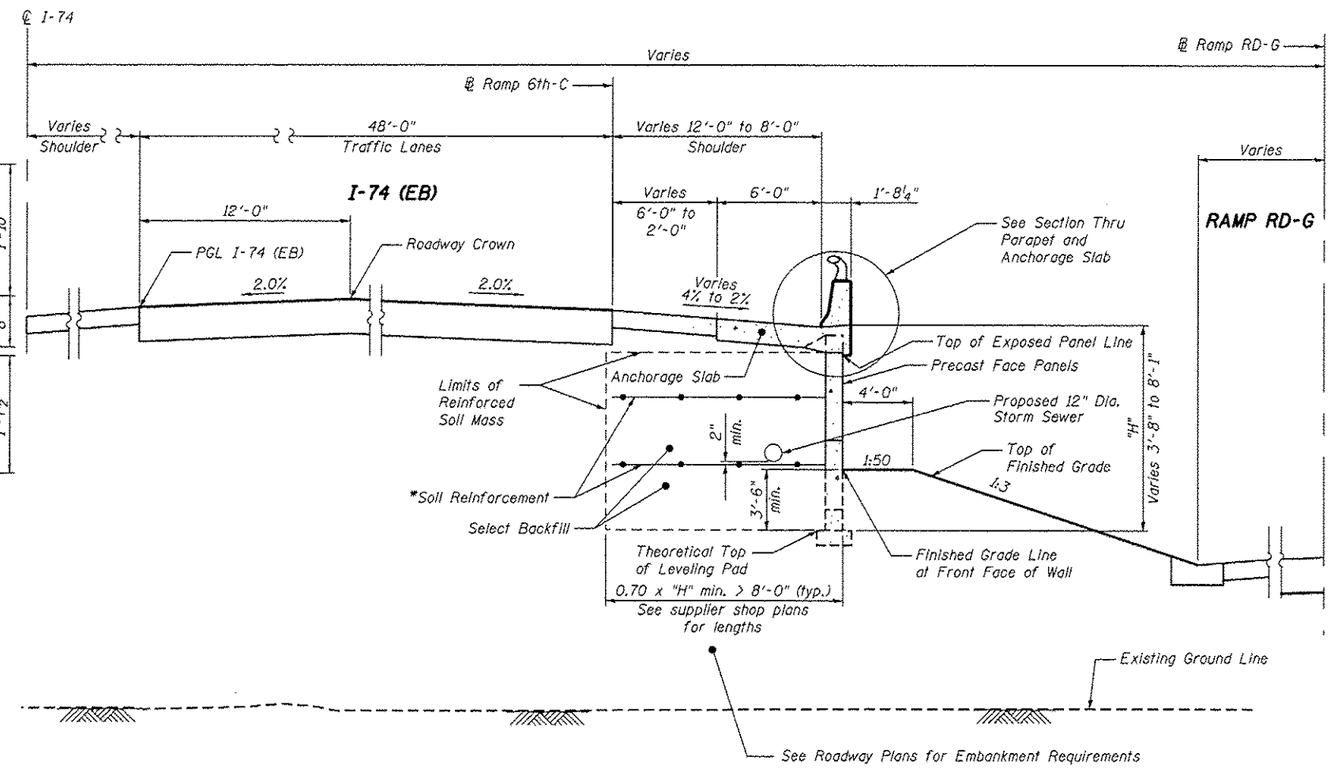

TYPICAL WALL SECTION

Sta. 25+75.00 (I-74) to Sta. 320+75.25 (Ramp 6th-C)

Note:

* The M.S.E. wall supplier's internal stability design shall account for the anchorage slab's bearing pressure surcharge of 1.0 ksf and horizontal sliding force of 0.5 kips/ft. of wall.

MODJESKI-MASTERS Experience great bridges.	USER NAME =	DESIGNED - YSS	REVISED 1 5/16/2017 JMH	STATE OF ILLINOIS DEPARTMENT OF TRANSPORTATION	MSE DETAILS 1 I-74 (EB)/RAMP 6TH-C RETAINING WALL 16 STRUCTURE NO. 081-6018	F.A.I. RTE.	SECTION	COUNTY	TOTAL SHEETS	SHEET NO.
		CHECKED - ZJB	REVISED			74	(81-1)R & 81-1HVBR	ROCK ISLAND	1504	1151
	PLOT SCALE =	DRAWN - ML.A	REVISED					CONTRACT NO. 64C08		
	PLOT DATE = 1/20/2017	CHECKED - YSS	REVISED		SHEET NO. 3 OF 15 SHEETS			ILLINOIS FED. AID PROJECT		

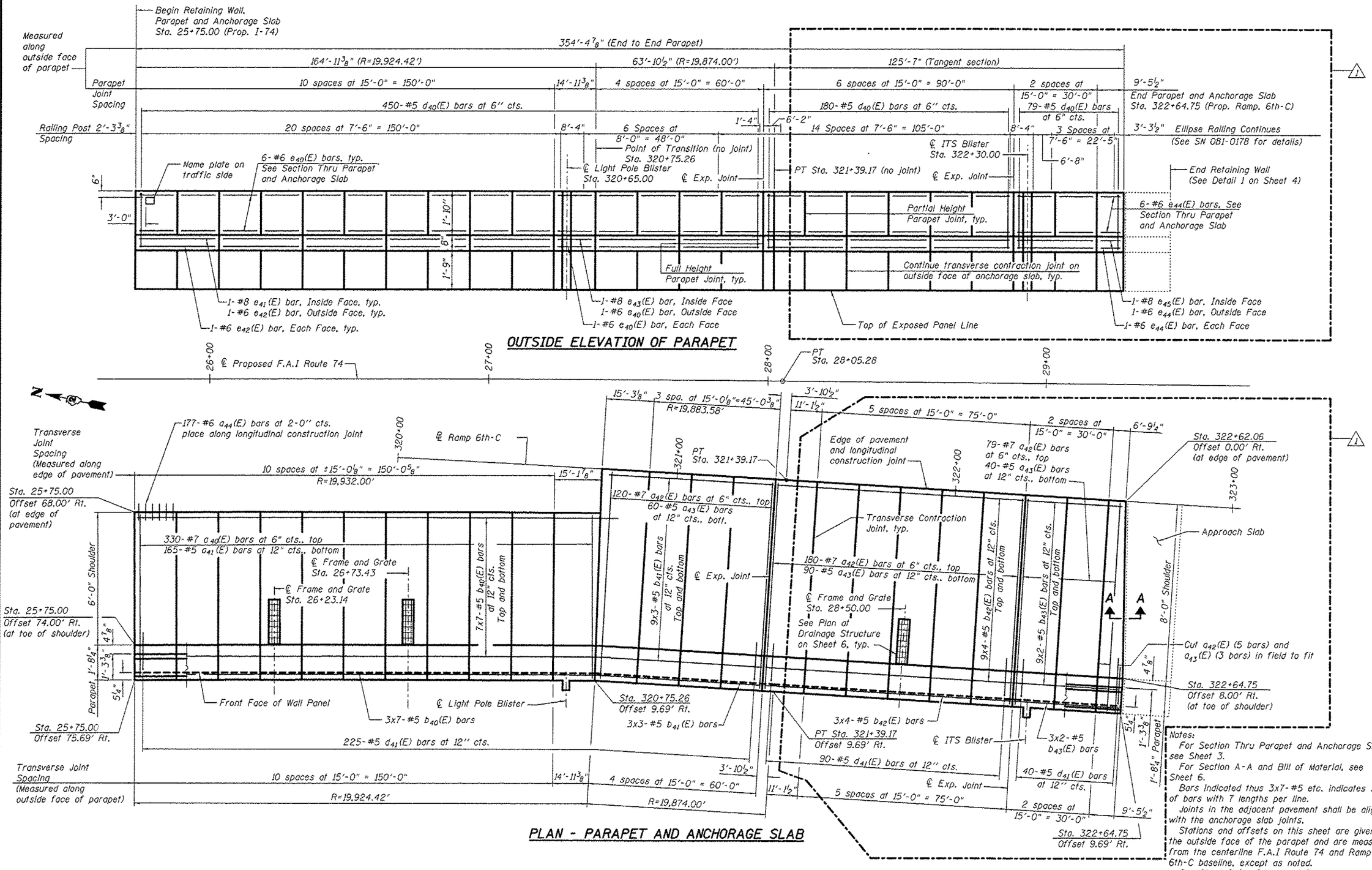

Notes:

For Section Thru Parapet and Anchorage Slab, see Sheet 3.

For Section A-A and Bill of Material, see Sheet 6.

Bars indicated thus 3x7-#5 etc. indicates 3 lines of bars with 7 lengths per line.

Joints in the adjacent pavement shall be aligned with the anchorage slab joints.

Stations and offsets on this sheet are given to the outside face of the parapet and are measured from the centerline F.A.I Route 74 and Ramp 6th-C baseline, except as noted.

See Sheet 9 for Blister reinforcement.

MODJESKI—MASTERS
Experience great bridges.

USER NAME =	DESIGNED - YSS	REVISED 1 5/16/2017 JMH	
	CHECKED - ZJB	REVISED	
PLOT SCALE =	DRAWN - MLA	REVISED	
PLOT DATE = 1/20/2017	CHECKED - YSS	REVISED	

STATE OF ILLINOIS
DEPARTMENT OF TRANSPORTATION

PARAPET AND ANCHORAGE SLAB 1
I-74 (EB)/RAMP 6TH-C RETAINING WALL 16
STRUCTURE NO. 081-6018

SHEET NO. 5 OF 15 SHEETS

F.A.I. RTE.	SECTION	COUNTY	TOTAL SHEETS	SHEET NO.
74	(81-1)R & 81-1)HVBR	ROCK ISLAND	1504	1153

CONTRACT NO. 64C08

ILLINOIS FED. AID PROJECT

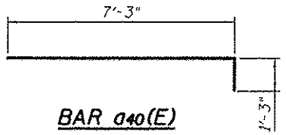

BAR a40(E)

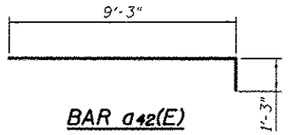

BAR a42(E)

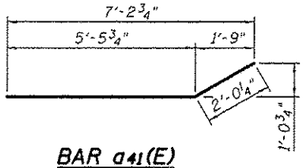

BAR a41(E)

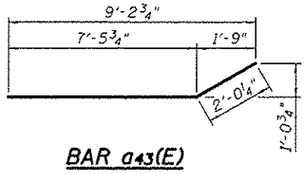

BAR a43(E)

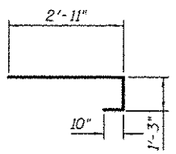

BAR a46(E)

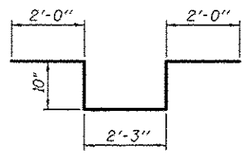

BAR a47(E)

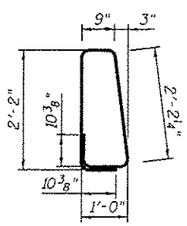

BAR d40(E)

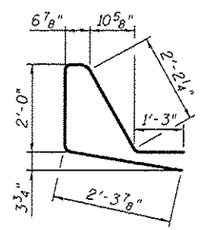

BAR d41(E)

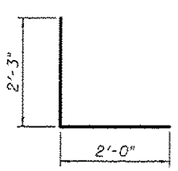

BAR d42(E)

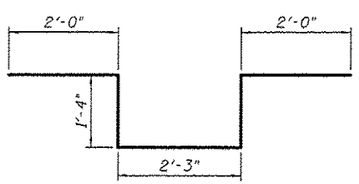

BAR d43(E)

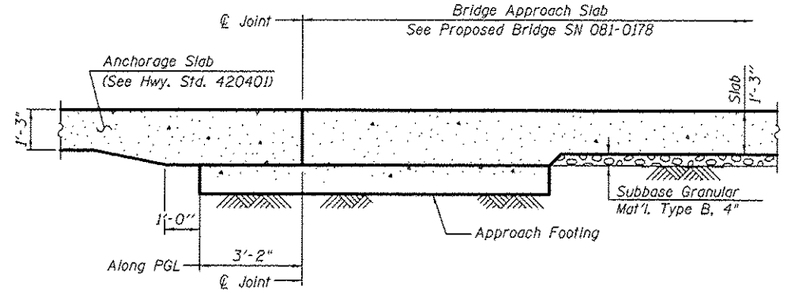

SECTION A-A

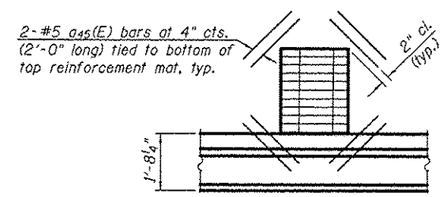

PLAN AT DRAINAGE STRUCTURE

(Cut longitudinal reinforcement to clear drainage structure.)

RETAINING WALL 16
BILL OF MATERIAL

Bar	No.	Size	Length	Shape
a40(E)	330	#7	8'-6"	
a41(E)	165	#5	7'-6"	
a42(E)	379	#7	10'-6"	
a43(E)	190	#5	9'-6"	
a44(E)	177	#6	2'-0"	
a45(E)	24	#5	2'-0"	
a46(E)	6	#6	5'-0"	
a47(E)	6	#6	7'-11"	
b40(E)	119	#5	27'-0"	
b41(E)	63	#5	22'-3"	
b42(E)	84	#5	25'-0"	
b43(E)	42	#5	21'-3"	
d40(E)	709	#5	7'-10"	
d41(E)	355	#5	8'-4"	
d42(E)	6	#6	4'-3"	
d43(E)	10	#6	8'-11"	
e40(E)	141	#6	14'-9"	
e41(E)	11	#8	29'-9"	
e42(E)	33	#6	29'-9"	
e43(E)	1	#8	14'-9"	
e44(E)	9	#6	9'-2"	
e45(E)	1	#8	9'-2"	
Reinforcement Bars, Epoxy Coated			Pound	40,240
Concrete Superstructure			Cu. Yd.	193.5

MIN. BAR LAP
#5 bars - 3'-3"

Note:
For location of Section A-A, see Sheet 5.

MODJESKI and MASTERS — Experience great bridges.	USER NAME =	DESIGNED - YSS	REVISED 5/16/2017 JMH
		CHECKED - ZJB	REVISED
	PLOT SCALE =	DRAWN - MLA	REVISED
	PLOT DATE = 1/20/2017	CHECKED - YSS	REVISED

STATE OF ILLINOIS
DEPARTMENT OF TRANSPORTATION

PARAPET AND ANCHORAGE SLAB 2
I-74 (EB)/RAMP 6TH-C RETAINING WALL 16
STRUCTURE NO. 081-6018
SHEET NO. 6 OF 15 SHEETS

F.A.I. RTE.	SECTION	COUNTY	TOTAL SHEETS	SHEET NO.
74	(B1-1)R & B1-1HVBR	ROCK ISLAND	1504	1154

CONTRACT NO. 64C08
ILLINOIS FED. AID PROJECT

GENERAL NOTES

1. Reinforcement bars designated (E) shall be epoxy coated.
2. Wall stations and offsets are given to the front face (FF) of the wall and are measured from the Ramp 6TH-C baseline, except as noted. FF of the wall is to be considered edge of panel or form liner.
3. See Special Provision for Mechanically Stabilized Earth Retaining Walls and Aggregate Column Ground Improvement for design and construction requirements.
4. For existing soils laboratory data, see the Geotechnical Investigation Laboratory Data Special Provision.
5. The piles for SN 081-0186 are located within the reinforced soil mass. See SN 081-0186 plans for additional pile requirements.
6. Wall system supplier shall coordinate proposed wall configuration with Aggregate Column Ground Improvement subcontractor.
7. Wall construction shall not begin until after Aggregate Column Ground Improvement has been completed in the area of the new wall.
8. See SN 081-0186 plans for maskwall details.

GROUND IMPROVEMENT PERFORMANCE REQUIREMENTS

1. Minimum factor of safety for global slope stability shall be 1.5.
2. Allowable bearing pressure (with F.S.) shall be equal to or greater than the equivalent uniform service bearing pressure as shown on Sheet 3. Intermediate values may be defined by interpolating between the values shown.

   Minimum factor of safety against equivalent uniform service bearing pressure shall be 2.0 if a load test is performed.

   Minimum factor of safety against equivalent uniform service bearing pressure shall be 2.5 if a load test is not performed.
3. Total settlement measured at the theoretical top of leveling pad shall not exceed 4.0 inches.
4. Total settlement measured on the pavement shall not exceed 1.0 inch.
5. Differential settlement measured along the theoretical top of leveling pad shall not exceed 1/100.
6. The assumed structure life for settlement computations shall be 75 years.
7. Contractor's verification program shall include monitoring points or other instrumentation to demonstrate compliance with the stated performance requirements.
8. The Shop Drawings and construction procedures submittal shall indicate the sequence of construction within the limits of Aggregate Column Ground Improvement. The aggregate column installation shall be coordinated with utility removal, structure removals, proposed utility installation, and bridge pile driving.
9. Aggregate columns shall be installed before the bridge piles are driven; however, the piles shall not be driven through the aggregate of an installed column. The aggregate column layout shall provide clearance for the bridge piles.

MSE WALL SETTLEMENT

1. The Top of Exposed Panel Elevations shown on these plans are final elevations after any settlement. The wall settlement will be determined by the ground improvement design. The wall system supplier shall coordinate with Aggregate Column Ground Improvement subcontractor to accommodate this settlement in the wall design.

TOTAL BILL OF MATERIAL

	ITEM	UNIT	TOTAL
	Structure Excavation	Cu. Yd.	397
	Concrete Superstructure	Cu. Yd.	92.9
	Protective Coat	Sq. Yd.	212
	Reinforcement Bars, Epoxy Coated	Pound	14,060
	Name Plates	Each	1
*	Aggregate Column Ground Improvement	L. Sum	0.43
	Mechanically Stabilized Earth Retaining Wall	Sq. Ft.	5,419
	Rock Fill	Cu. Yd.	597

1

* See proposed retaining wall S.N. 081-6012 for remainder of L. Sum quantity.

STATION 331+30.00
BUILT 201_ BY
STATE OF ILLINOIS
F.A.I. RT. 74
SEC. (81-1)R & 81-1HVBR
LOADING HS-20
STR. NO. 081-6019

NAME PLATE
See Std. 515001

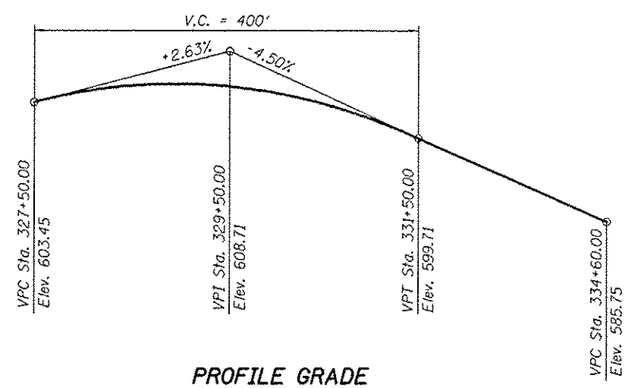

PROFILE GRADE
(Along ℄ Ramp 6th-C)

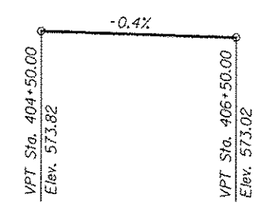

PROFILE GRADE
(Along ℄ 4th Avenue)

MODJESKI and MASTERS Experience great bridges.	USER NAME =	DESIGNED - YSS	REVISED 1 5/16/2017 JMH	STATE OF ILLINOIS DEPARTMENT OF TRANSPORTATION
		CHECKED - JMH	REVISED	
	PLOT SCALE =	DRAWN - MLA	REVISED	
	PLOT DATE = 1/20/2017	CHECKED - YSS	REVISED	

GENERAL NOTES
RAMP 6TH-C RETAINING WALL 18
STRUCTURE NO. 081-6019
SHEET NO. 2 OF 12 SHEETS

F.A.I. RTE.	SECTION	COUNTY	TOTAL SHEETS	SHEET NO.
74	(81-1)R & 81-1HVBR	ROCK ISLAND	1504	1165

CONTRACT NO. 64C08
ILLINOIS FED. AID PROJECT

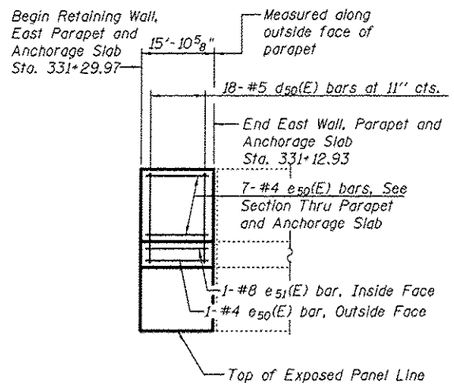

OUTSIDE ELEVATION OF EAST PARAPET

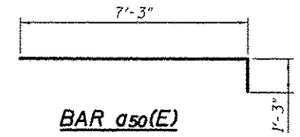

BAR a50(E)

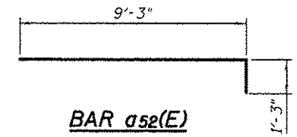

BAR a52(E)

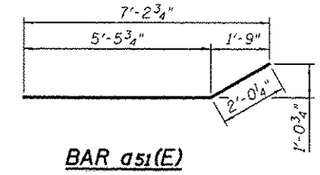

BAR a51(E)

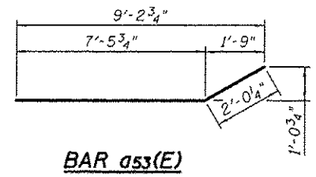

BAR a53(E)

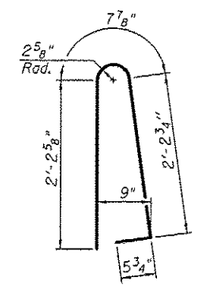

BAR d50(E)

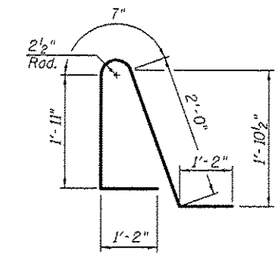

BAR d51(E)

RETAINING WALL 18 BILL OF MATERIAL

Bar	No.	Size	Length	Shape
a50(E)	23	#7	8'-6"	
a51(E)	17	#5	7'-6"	
a52(E)	201	#7	10'-6"	
a53(E)	151	#5	9'-6"	
a54(E)	83	#6	2'-0"	
b50(E)	14	#5	16'-3"	
b51(E)	3	#5	15'-9"	
b52(E)	42	#5	16'-9"	
b53(E)	84	#5	31'-6"	
d50(E)	183	#5	5'-7"	
d51(E)	183	#5	6'-10"	
e50(E)	8	#4	15'-6"	
e51(E)	1	#8	15'-6"	
e52(E)	7	#4	15'-0"	
e53(E)	1	#8	30'-0"	
e54(E)	1	#4	30'-0"	
e55(E)	63	#4	14'-9"	
e56(E)	4	#8	29'-9"	
e57(E)	4	#4	29'-9"	
Reinforcement Bars, Epoxy Coated			Pound	14,060
Concrete Superstructure			Cu. Yd.	92.9

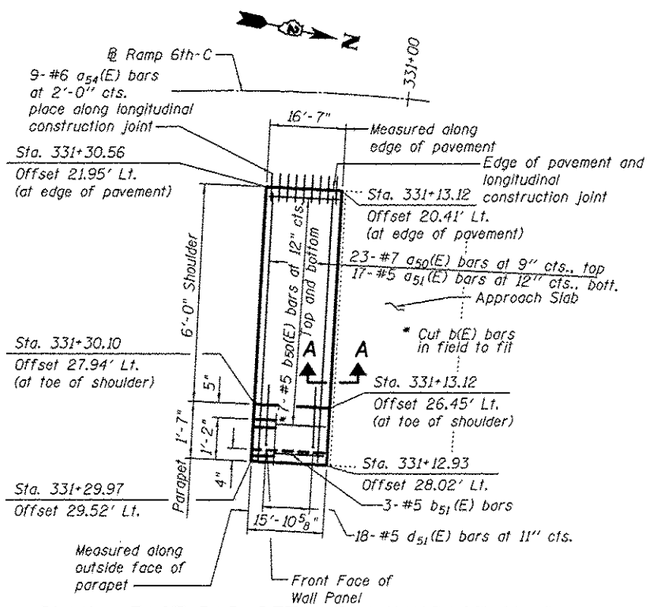

PLAN - EAST PARAPET AND ANCHORAGE SLAB

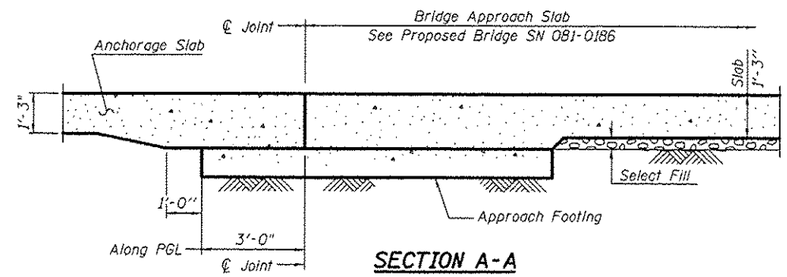

SECTION A-A

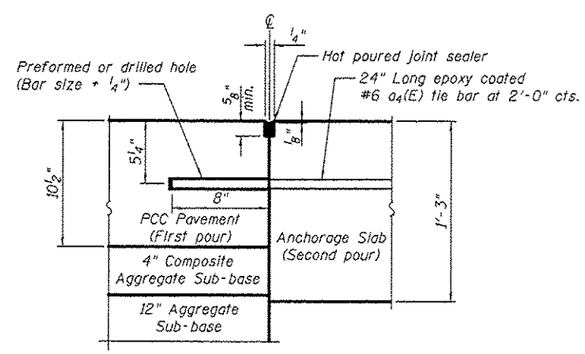

Notes:
The contractor may substitute at his option, formed in place tie bars provided the bar length is increased to 30" and the tie bar is centered across the joint.
Preformed or drilled hole shall be in the first pour.

LONGITUDINAL CONSTRUCTION JOINT GROUTED-IN-PLACE TIE BAR

Notes:
For Section Thru Parapet and Anchorage Slab, see Sheet 4.
Joints in the adjacent pavement shall be aligned with the anchorage slab joints.
Stations and offsets on this sheet are given to the outside face of the parapet and are measured from Ramp 6th-C baseline, except as noted.

MODJESKI and MASTERS	USER NAME =	DESIGNED - YSS	REVISED 5/16/2017 JMH
		CHECKED - ZJB	REVISED
	PLOT SCALE =	DRAWN - MLA	REVISED
	PLOT DATE = 1/20/2017	CHECKED - YSS	REVISED

STATE OF ILLINOIS
DEPARTMENT OF TRANSPORTATION

PARAPET AND ANCHORAGE SLAB 1
RAMP 6TH-C RETAINING WALL 18
STRUCTURE NO. 081-6019
SHEET NO. 7 OF 12 SHEETS

F.A.I. RTE.	SECTION	COUNTY	TOTAL SHEETS	SHEET NO.
74	(B1-1)R & B1-1HVBR	ROCK ISLAND	1504	1170
		CONTRACT NO. 64C08		
		ILLINOIS FED. AID PROJECT		

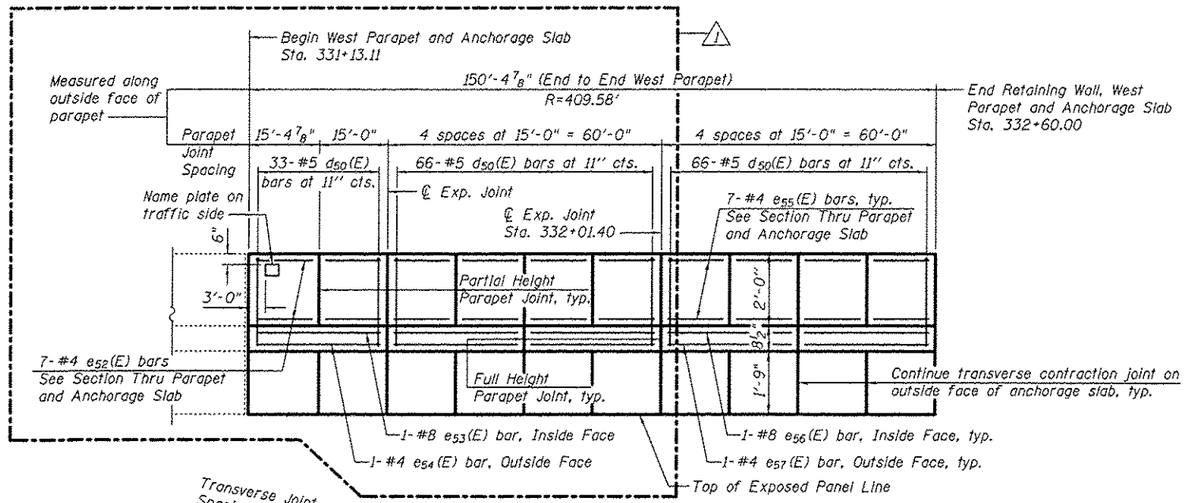

OUTSIDE ELEVATION OF WEST PARAPET

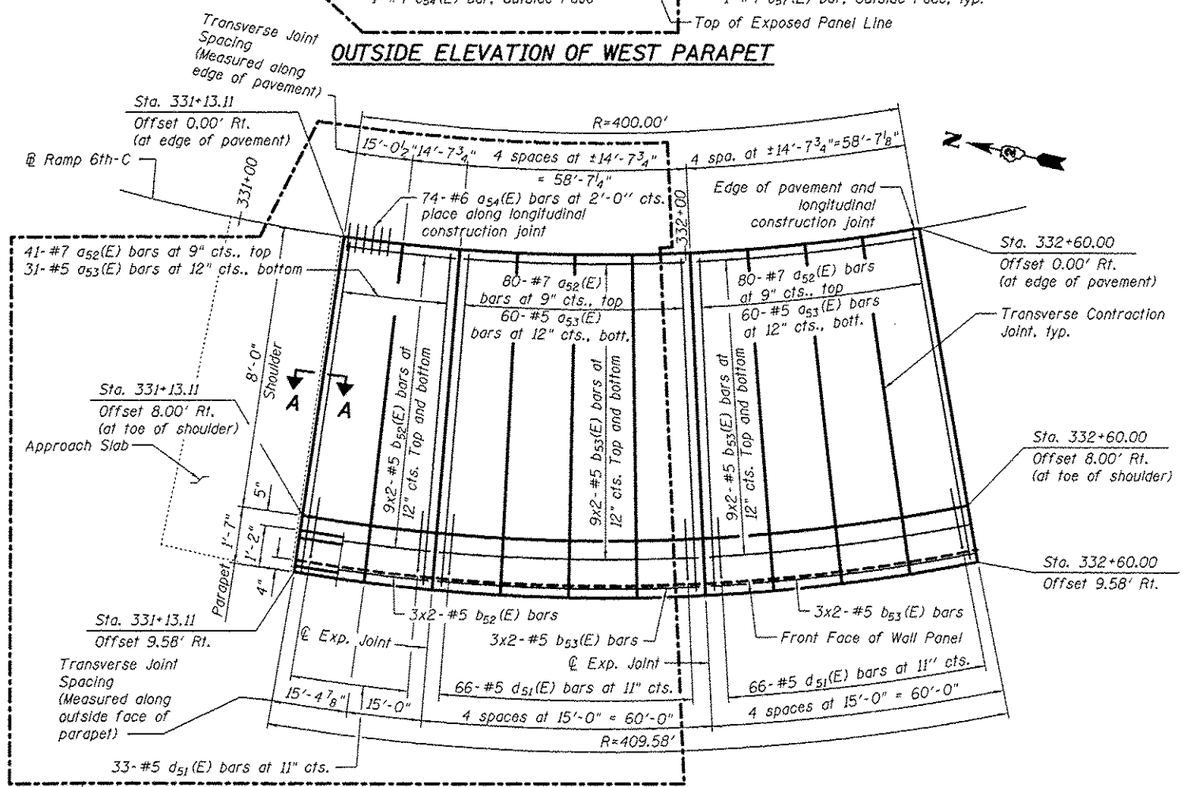

PLAN - WEST PARAPET AND ANCHORAGE SLAB

MIN. BAR LAP

#5 bars - 3'-3"

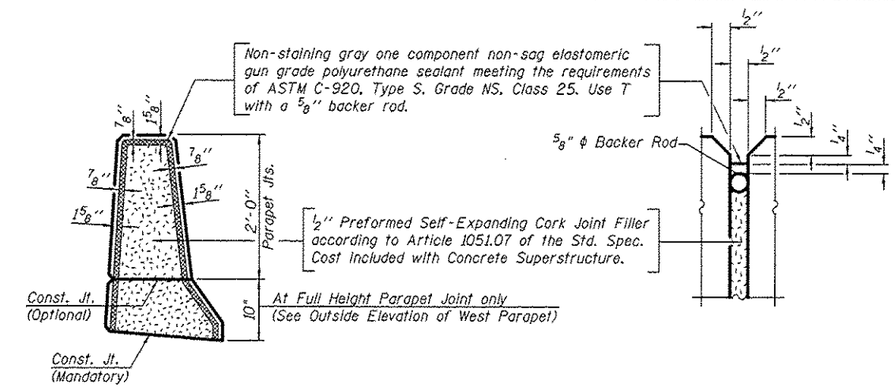

PARAPET JOINT DETAILS

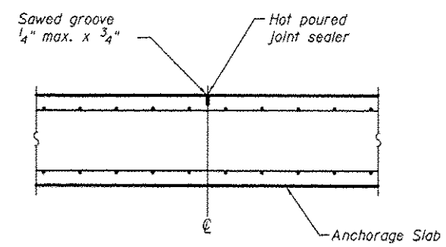

TRANSVERSE CONTRACTION JOINT

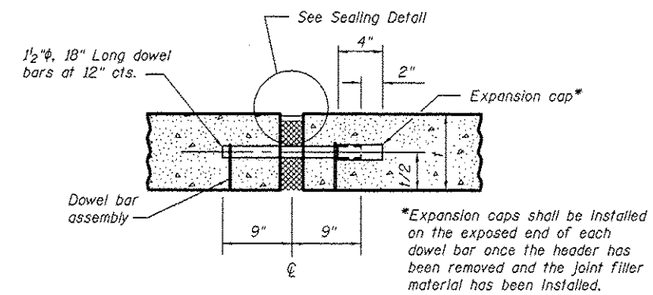

ANCHORAGE SLAB EXPANSION JOINT

Expansion joint and dowel bars included in the cost of Concrete Superstructure.

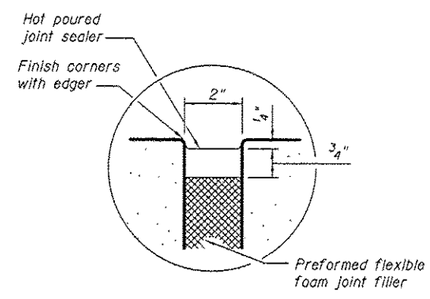

SEALING DETAIL

Notes:

For Section Thru Parapet and Anchorage Slab, see Sheet 4.

Bars indicated thus 9x4-#5 etc. indicates 9 lines of bars with 4 lengths per line.

Joints in the adjacent pavement shall be aligned with the anchorage slab joints.

Stations and offsets on this sheet are given to the outside face of the parapet and are measured from Ramp 6th-C baseline, except as noted.

For Section A-A and Bill of Material, see Sheet 7.

MODJESKI and MASTERS	USER NAME =	DESIGNED - YSS	REVISED 1 5/16/2017 JMH	STATE OF ILLINOIS DEPARTMENT OF TRANSPORTATION	PARAPET AND ANCHORAGE SLAB 2 RAMP 6TH-C RETAINING WALL 18 STRUCTURE NO. 081-6019	F.A.I. RTE.	SECTION	COUNTY	TOTAL SHEETS	SHEET NO.
		CHECKED - JMH	REVISED			74	(81-1)R & 81-1HVBR	ROCK ISLAND	1504	1171
	PLOT SCALE =	DRAWN - MLA	REVISED					CONTRACT NO. 64C08		
	PLOT DATE = 1/20/2017	CHECKED - YSS	REVISED		SHEET NO. 8 OF 12 SHEETS		ILLINOIS FED. AID PROJECT			

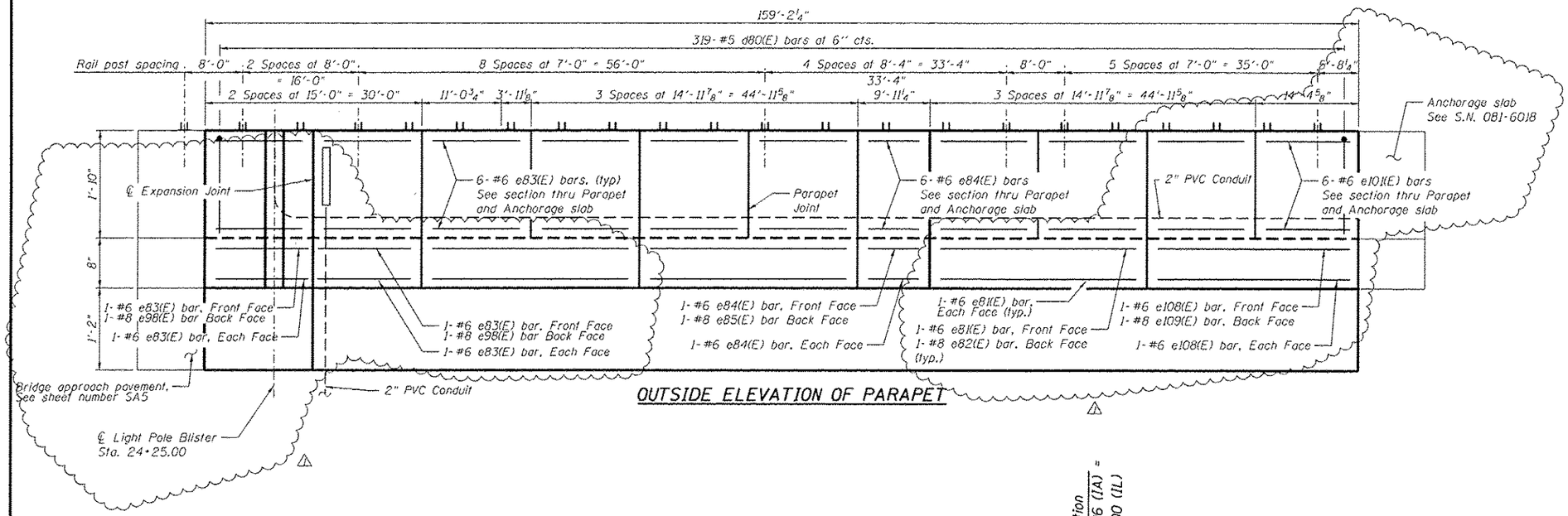

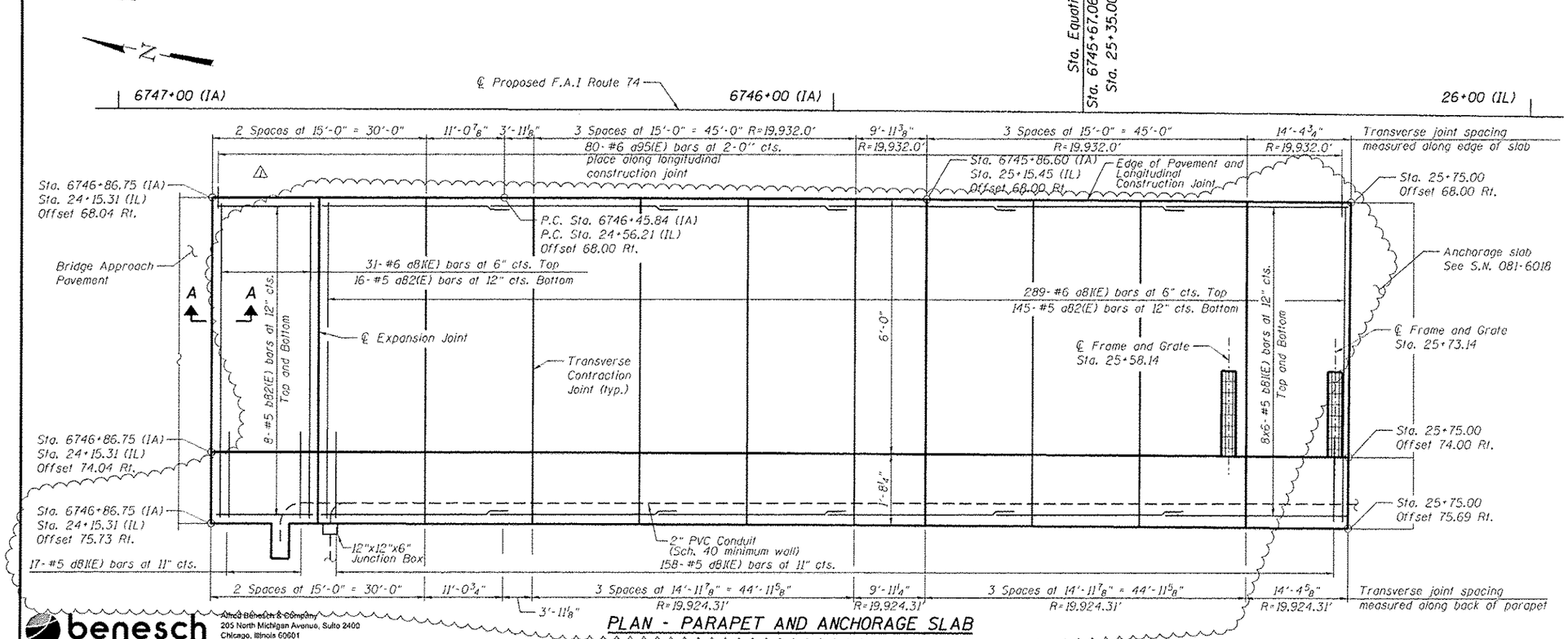

KEVIN M. PLACZEK
081-005460
LICENSED
STRUCTURAL
ENGINEER
STATE OF ILLINOIS

EXPIRATION DATE 11-30-2018
DATE: 5-26-2017

Min. Bar Lap #5 Bar = 2'-7"

Notes:

For Section Thru Parapet and Anchorage Slab, see Sheet AN2.

For Section A-A see Sheet AN2.

For Bill of Material, see Sheet AN3.

Bars indicated thus 3x7-#5 etc. indicates 3 lines of bars with 7 lengths per line.

Joints in the adjacent pavement shall be aligned with the anchorage slab joints.

Stations and offsets on this sheet are given to the outside face of the parapet and are measured from the centerline F.A.I Route 74, except as noted.

See Sheet AN3 for Light Pole Blister reinforcement.

For conduit and junction box details and pay items, see Lighting Plans.

For Frame and Grate Details, see Drainage Plans.

benesch
Alfred Benesch & Company
205 North Michigan Avenue, Suite 2400
Chicago, Illinois 60601
312-565-0450 Job No. 10061

FILENAME = 8010177-C004B-AnchorageSlabAddenda.dgn	USER NAME = kplaczek	DESIGNED - SLD	REVISED - △1 05/16/17	STATE OF ILLINOIS DEPARTMENT OF TRANSPORTATION	ANCHORAGE SLAB PLAN AND ELEVATION I-74 EASTBOUND	F.A.I. RTE.	SECTION	COUNTY	TOTAL SHEETS	SHEET NO.
		CHECKED - KMP	REVISED -			74	(81-1)R & B1-1(HVBR)	ROCK ISLAND	1504	1176
	PLOT SCALE =	DRAWN - KMS	REVISED -					CONTRACT NO. 64C08		
MODEL = Common	PLOT DATE = 5/26/2017	CHECKED - KMP	REVISED -		SHEET NO. AN1 OF AN20 SHEETS		ILLINOIS FED. AID PROJECT			

c:\pwise_work\do_not_delete\dms02470\8010177-C004B-AnchorageSlabAddenda.dgn 5:26:57 PM 5/26/2017

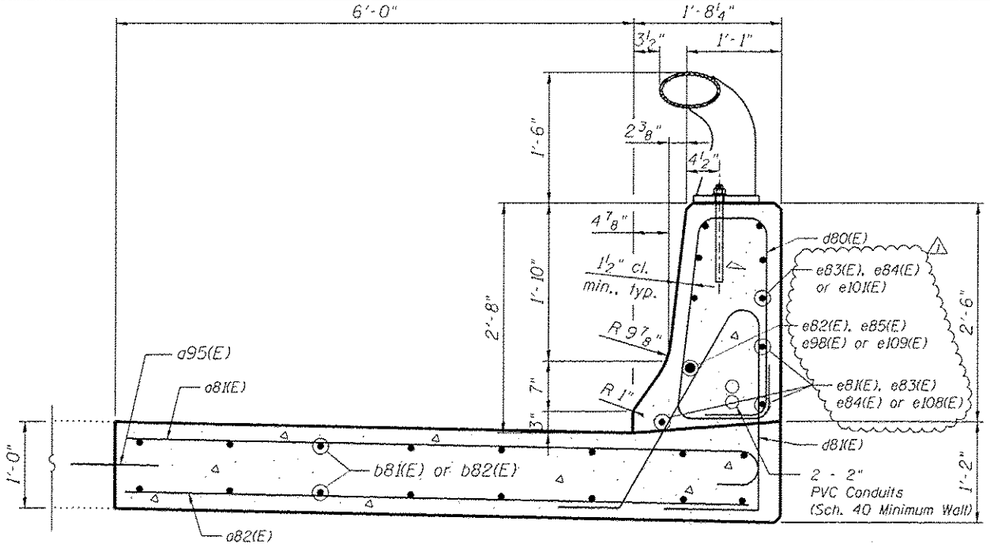

SECTION THRU PARAPET AND ANCHORAGE SLAB

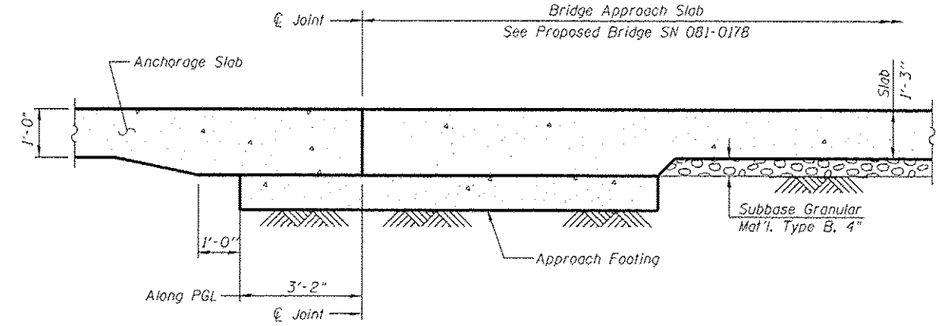

SECTION A-A

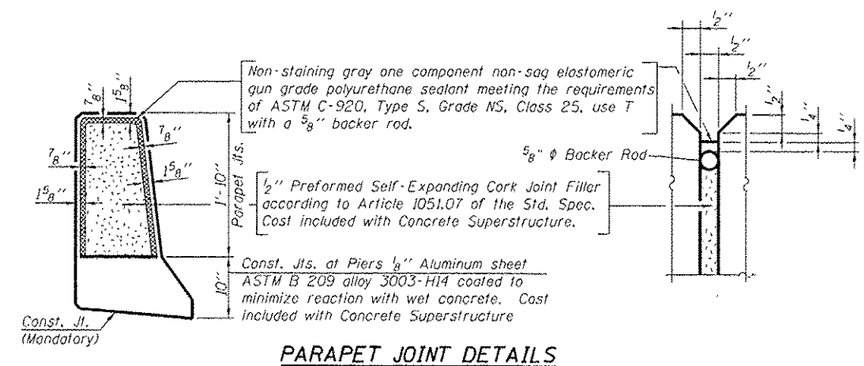

PARAPET JOINT DETAILS

(For Conventional Concrete Placement)

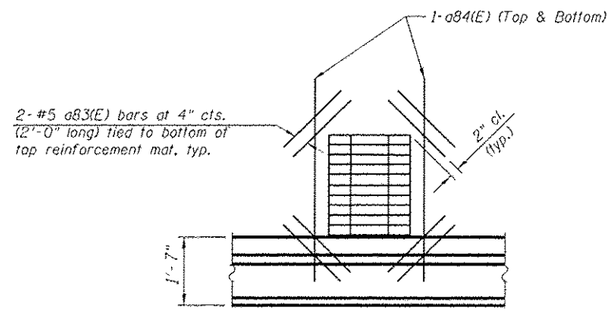

PLAN AT DRAINAGE STRUCTURE

(Cut longitudinal reinforcement to clear drainage structure.)

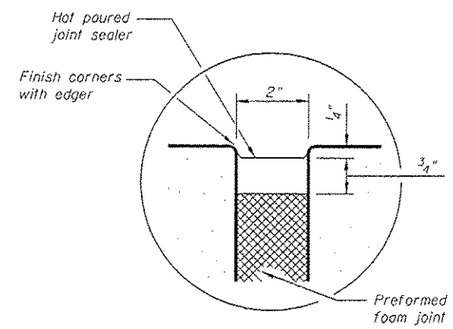

SEALING DETAIL

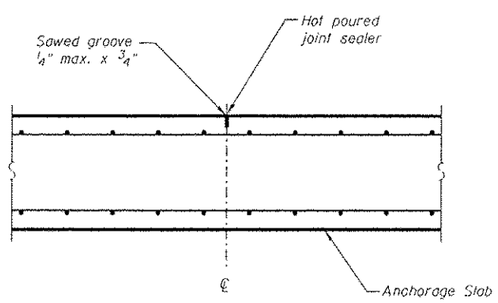

TRANSVERSE CONTRACTION JOINT

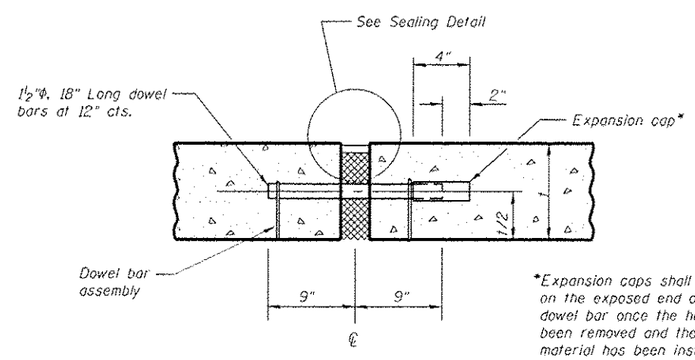

*Expansion caps shall be installed on the exposed end of each dowel bar once the header has been removed and the joint filler material has been installed.

ANCHORAGE SLAB EXPANSION JOINT

Expansion joint and dowel bars included in the cost of Concrete Superstructure.

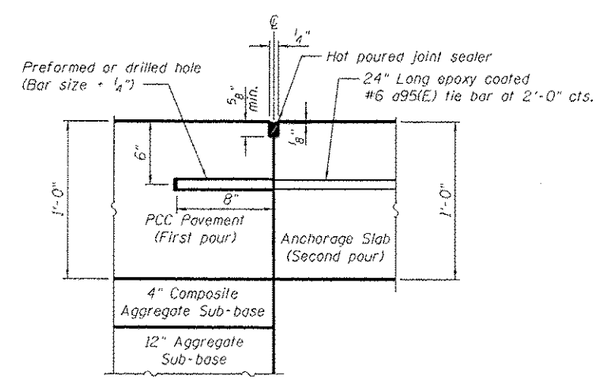

Notes:
The Contractor may substitute at his option, formed in place tie bars provided the bar length is increased to 30" and the tie bar is centered across the joint.
Preformed or drilled hole shall be in the first pour.

LONGITUDINAL CONSTRUCTION JOINT GROUTED-IN-PLACE TIE BAR

benesch
Alfred Benesch & Company
205 North Michigan Avenue, Suite 2400
Chicago, Illinois 60601
312-565-0450 Job No. 10061

FILENAME = 081B177-C00AB-AnchorageSlabAddenda.dgn	USER NAME = kplaczek	DESIGNED - SLD	REVISED - △ 05/16/17
		CHECKED - KMP	REVISED -
	PLOT SCALE =	DRAWN - KMS	REVISED -
MODEL = IDOTarchitect.tbl	PLOT DATE = 5/26/2017	CHECKED - KMP	REVISED -

STATE OF ILLINOIS
DEPARTMENT OF TRANSPORTATION

ANCHORAGE SLAB DETAILS
I-74 EASTBOUND

SHEET NO. AN2 OF AN20 SHEETS

F.A.I. RTE.	SECTION	COUNTY	TOTAL SHEETS	SHEET NO.
74	(81-1)R & (81-1)HVBR)	ROCK ISLAND	1504	1177
		CONTRACT NO. 64C08		
		ILLINOIS FED. AID PROJECT		

5/26/2017 5:27:03 PM c:\pwise_work\do_not_delete\dms02470\0810177-C00AB-AnchorageSlabAddenda.dgn

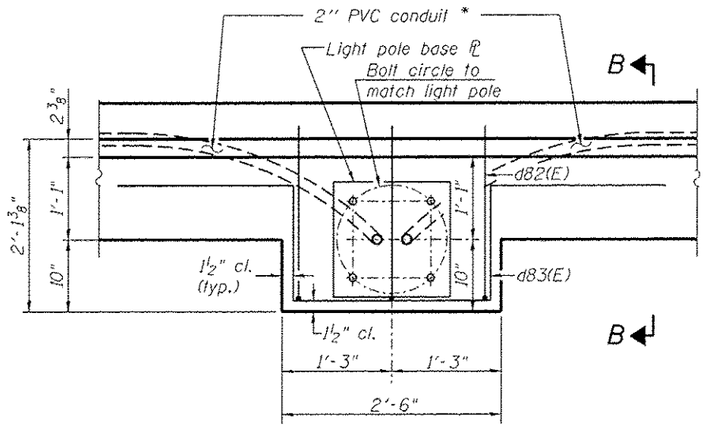

PLAN - LIGHT POLE BASE

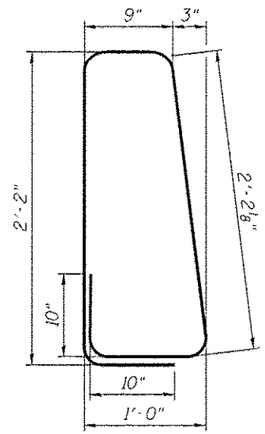

BAR d80(E)

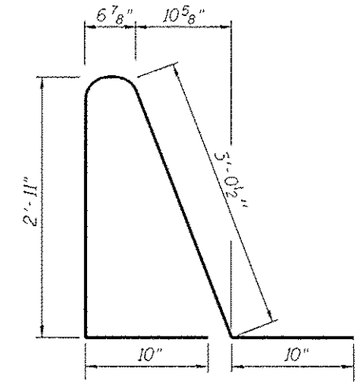

BAR d81(E)

BILL OF MATERIAL
EASTBOUND

Bar	No.	Size	Length	Shape
a81(E)	320	#6	7'-11"	
a82(E)	161	#5	7'-3"	
a83(E)	16	#5	2'-0"	
a84(E)	8	#5	5'-0"	
a95(E)	80	#6	2'-0"	
b81(E)	96	#5	26'-9"	
b82(E)	16	#5	14'-8"	
d80(E)	319	#5	7'-10"	
d81(E)	175	#5	8'-3"	
d82(E)	3	#6	4'-5"	
d83(E)	5	#6	8'-11"	
e81(E)	9	#6	29'-8"	
e82(E)	3	#8	29'-8"	
e83(E)	60	#6	14'-8"	
e84(E)	9	#6	9'-7"	
e85(E)	1	#8	9'-7"	
e98(E)	2	#8	14'-8"	
e101(E)	6	#6	14'-0"	
e108(E)	3	#6	29'-0"	
e109(E)	1	#8	29'-0"	
Concrete Superstructure			Cu. Yd.	66.1
Reinforcement Bars, Epoxy Coated			Pound	14,990
Protective Coat			Sq. Yd.	182.1

Bars indicated thus 1 x 5 - #5 etc. indicates 1 line of bars with 5 lengths per line.

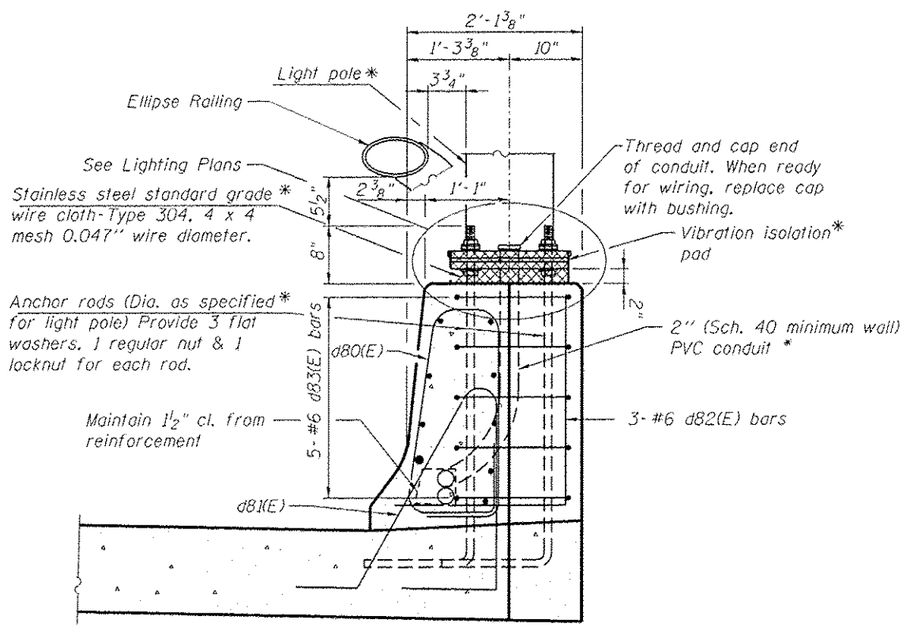

SECTION B-B

* See lighting plans for details and pay items

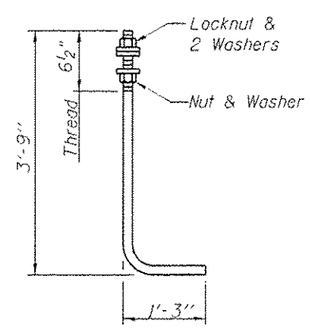

ANCHOR ROD

Diameter as specified for light poles (ASTM F 1554 Grade 105). Full length hot dipped galvanized. Anchor bolts included in the cost of Concrete Superstructure.

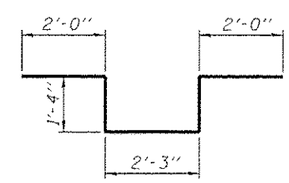

BAR d83(E)

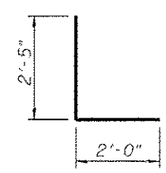

BAR d82(E)

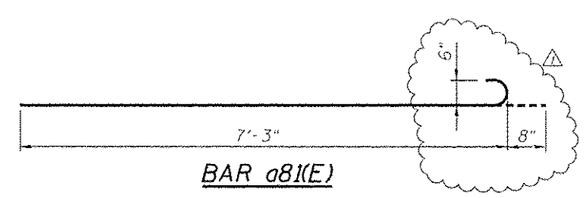

BAR a81(E)

benesch
Alfred Benesch & Company
205 North Michigan Avenue, Suite 2400
Chicago, Illinois 60601
312-565-0450 Job No. 10061

FILENAME = 0810177-C00AB-AnchorageSlabAddenda.dgn	USER NAME = kplaczek	DESIGNED - SLD	REVISED - 05/16/17
		CHECKED - KMP	REVISED -
MODEL = C00AnchorDet2	PLOT SCALE =	DRAWN - KMS	REVISED -
	PLOT DATE = 5/26/2017	CHECKED - KMP	REVISED -

STATE OF ILLINOIS
DEPARTMENT OF TRANSPORTATION

ANCHORAGE SLAB DETAILS
I-74 EASTBOUND

SHEET NO. AN3 OF AN20 SHEETS

F.A.I. RTE.	SECTION	COUNTY	TOTAL SHEETS	SHEET NO.
74	(81-1)R & 81-1(HVBR)	ROCK ISLAND	1504	1178
		CONTRACT NO. 64C08		
		ILLINOIS FED. AID PROJECT		

5/26/2017 5:27:18 PM c:\pwise_work\do_not_delete\dms82470\0810177-C00AB-AnchorageSlabAddenda.dgn

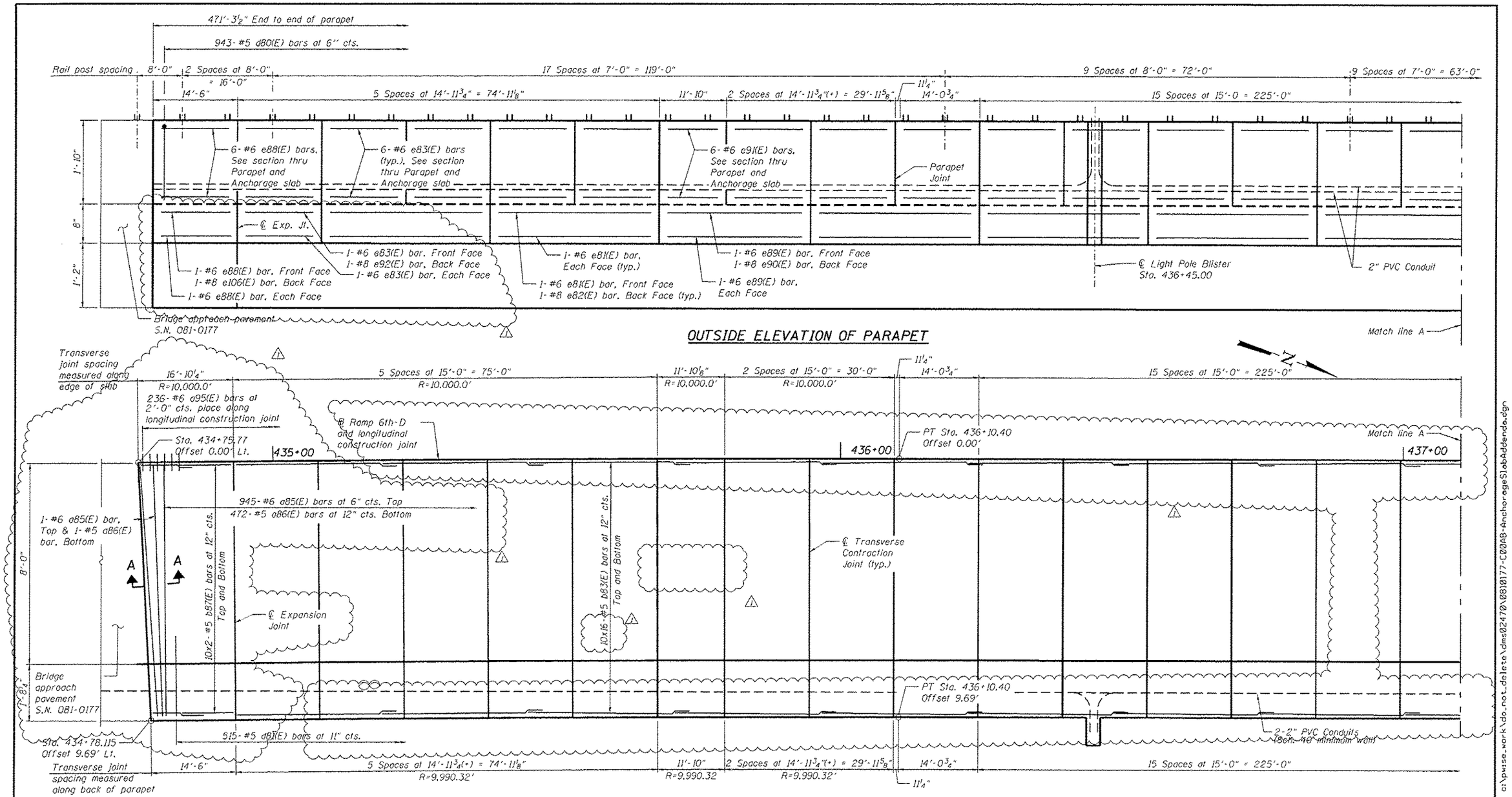

PLAN - PARAPET AND ANCHORAGE SLAB

Min. Bar Lap #5 Bar = 2'-7"

KEVIN M. PLACZEK 081-005460 LICENSED STRUCTURAL ENGINEER STATE OF ILLINOIS

EXPIRATION DATE 11-30-2018
DATE: 5-26-2017

Notes:
For Section Thru Parapet and Anchorage Slab, see Sheet AN6.
For Section A-A and Bill of Material, see Sheet AN7.
Bars indicated thus 3x7-#5 etc. indicates 3 lines of bars with 7 lengths per line.
Joints in the adjacent pavement shall be aligned with the anchorage slab joints.
Stations and offsets on this sheet are given to the outside face of the parapet and are measured from the baseline Ramp 6th-D, except as noted.
See Sheet AN7 for Light Pole Blister reinforcement. △1
For lightpoles and conduit details, see Lighting plans.
For Frame and Grate Details, see Drainage Plans.

benesch
Alfred Benesch & Company
205 North Michigan Avenue, Suite 2400
Chicago, Illinois 60601
312-565-0450 Job No. 10061

FILENAME = 081-0177-C00AB-AnchorageSlabAddenda.dgn	USER NAME = kplaczek	DESIGNED - SLD	REVISED - △1 05/16/17	STATE OF ILLINOIS DEPARTMENT OF TRANSPORTATION	ANCHORAGE SLAB PLAN AND ELEVATION I-74 WESTBOUND	F.A.I. RTE.	SECTION	COUNTY	TOTAL SHEETS / SHEET NO.
		CHECKED - KMP	REVISED -			74	(81-1)R & 81-1(HVBR)	ROCK ISLAND	1504 / 1179
MODEL =	PLOT SCALE =	DRAWN - KMS	REVISED -		SHEET NO. AN4 OF AN20 SHEETS			CONTRACT NO. 64C08	
	PLOT DATE = 5/26/2017	CHECKED - KMP	REVISED -					ILLINOIS FED. AID PROJECT	

c:\pwise_work\do_not_delete\dms02470\0810177-C00AB-AnchorageSlabAddenda.dgn 5:27:17 PM 5/26/2017

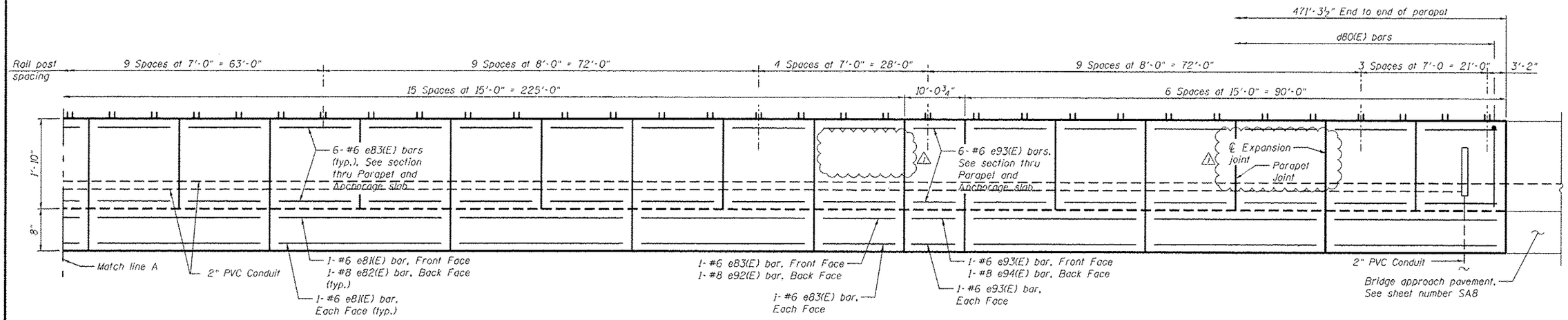

OUTSIDE ELEVATION OF PARAPET

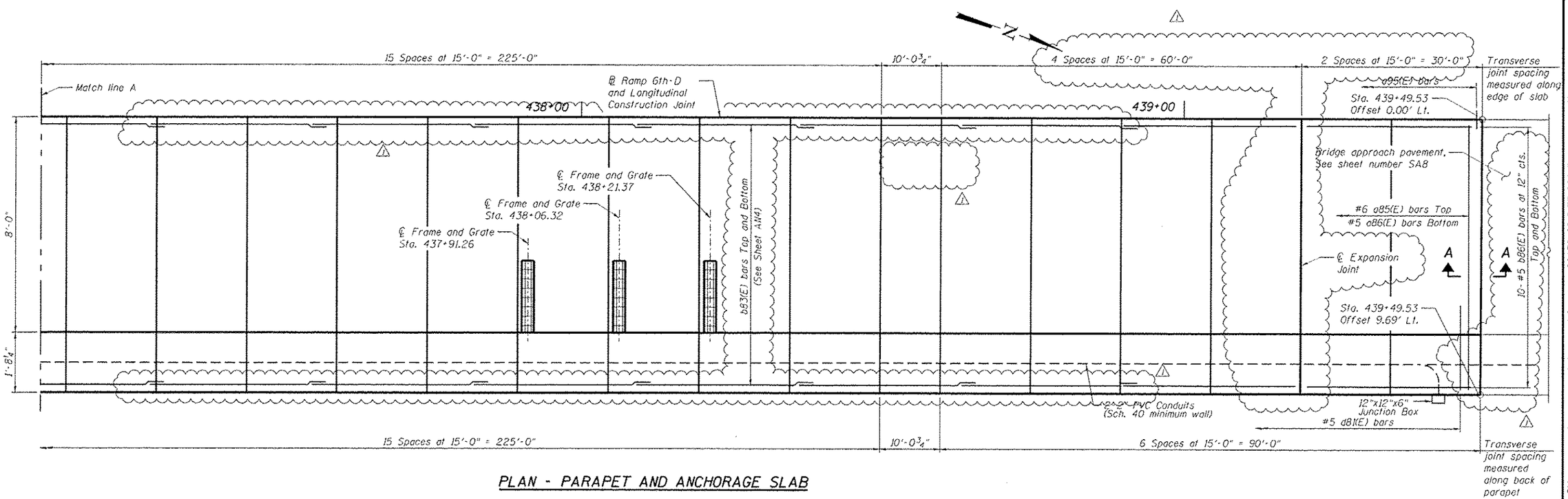

PLAN - PARAPET AND ANCHORAGE SLAB

Min. Bar Lap #5 Bar = 2'-7"

benesch

Alfred Benesch & Company
205 North Michigan Avenue, Suite 2400
Chicago, Illinois 60601
312-565-0450 Job No. 10061

FILENAME = 8810177-C08AB-AnchorageSlabAddenda.dgn	USER NAME = kplaczek	DESIGNED - SLO	REVISED - 1 05/16/17
		CHECKED - KMP	REVISED -
MODEL =	PLOT SCALE =	DRAWN - KMS	REVISED -
	PLOT DATE = 5/26/2017	CHECKED - KMP	REVISED -

STATE OF ILLINOIS
DEPARTMENT OF TRANSPORTATION

ANCHORAGE SLAB PLAN AND ELEVATION
I-74 WESTBOUND

SHEET NO. AN5 OF AN20 SHEETS

F.A.I. RTE.	SECTION	COUNTY	TOTAL SHEETS	SHEET NO.
74	(81-1)R & 81-1(HVBR)	ROCK ISLAND	1504	1180
		CONTRACT NO. 64C08		
		ILLINOIS FED. AID PROJECT		

c:\pwise_work\do_not_delete\dms02470\8810177-C08AB-AnchorageSlabAddenda.dgn 5:37:02 PM 5/26/2017

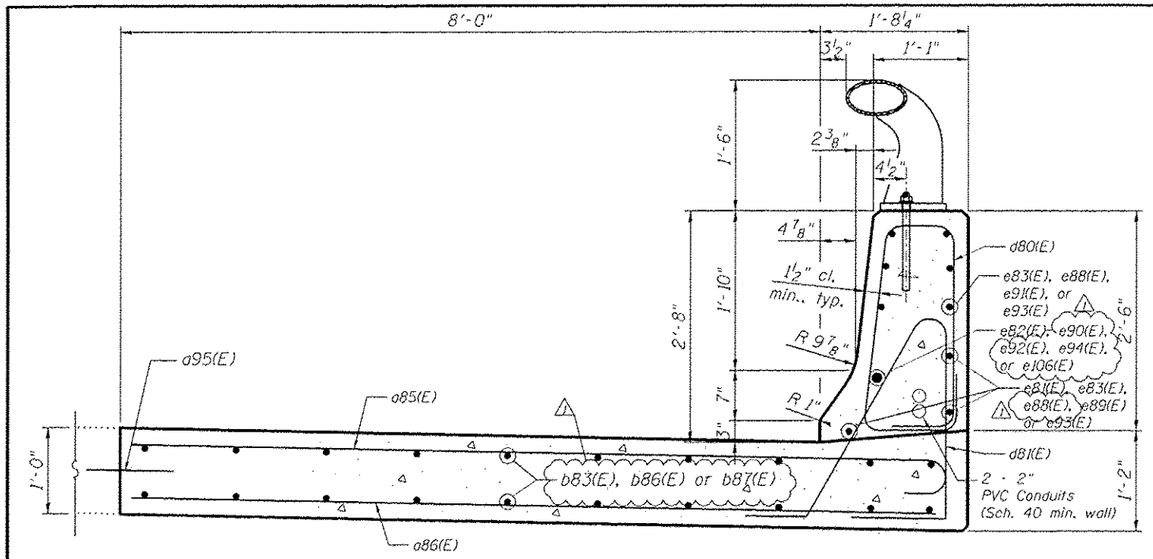

SECTION THRU PARAPET AND ANCHORAGE SLAB

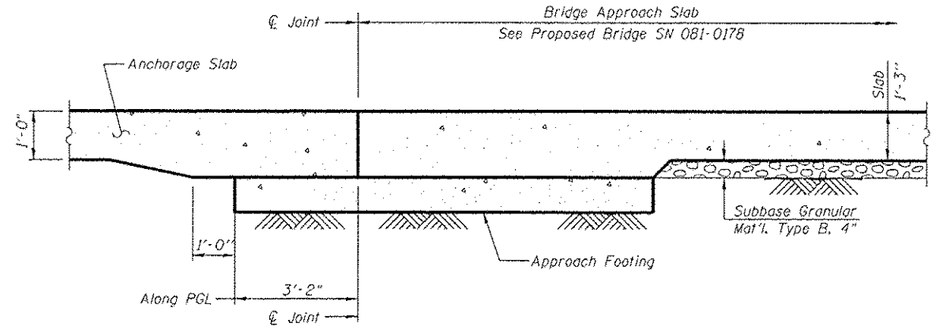

SECTION A-A

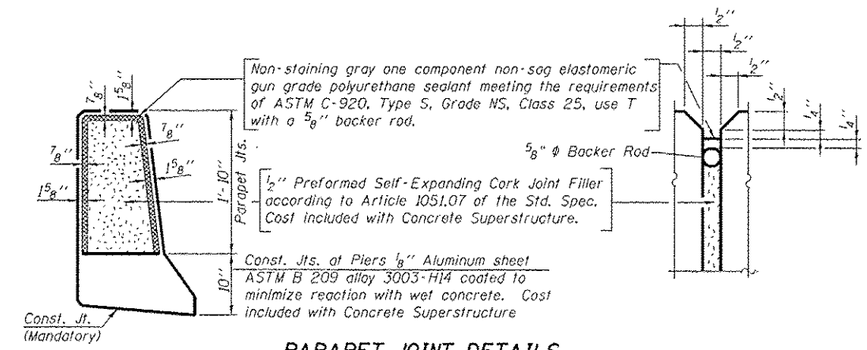

PARAPET JOINT DETAILS

(For Conventional Concrete Placement)

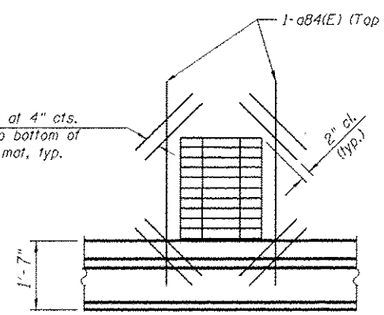

PLAN AT DRAINAGE STRUCTURE

(Cut longitudinal reinforcement to clear drainage structure.)

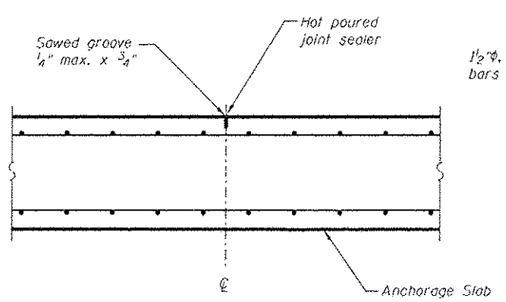

TRANSVERSE CONTRACTION JOINT

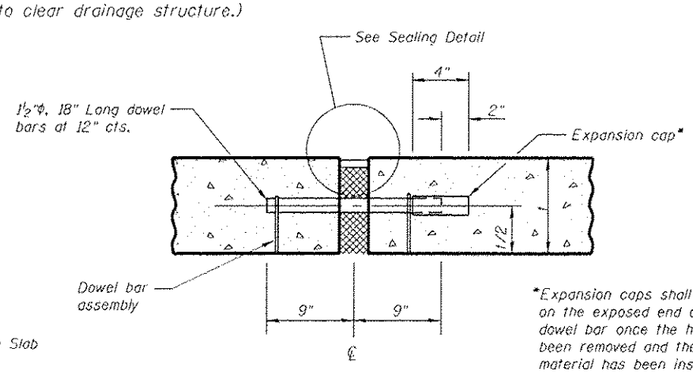

*Expansion caps shall be installed on the exposed end of each dowel bar once the header has been removed and the joint filler material has been installed.

ANCHORAGE SLAB EXPANSION JOINT

Expansion joint and dowel bars included in the cost of Concrete Superstructure.

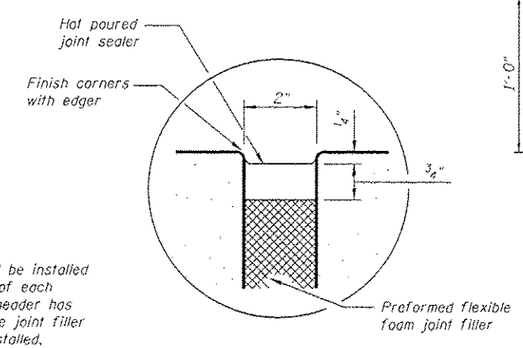

SEALING DETAIL

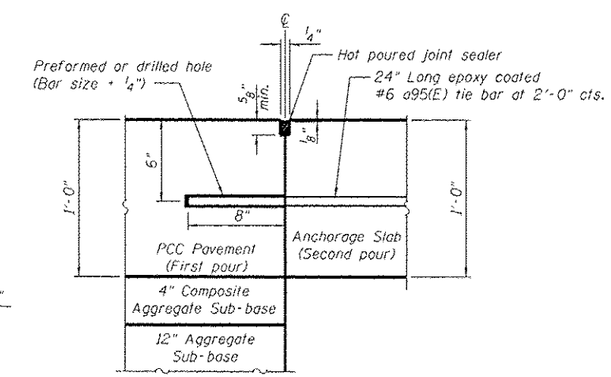

Notes:
The Contractor may substitute at his option, formed in place tie bars provided the bar length is increased to 30" and the tie bar is centered across the joint.
Preformed or drilled hole shall be in the first pour.

LONGITUDINAL CONSTRUCTION JOINT GROUTED-IN-PLACE TIE BAR

benesch
Alfred Benesch & Company
205 North Michigan Avenue, Suite 2400
Chicago, Illinois 60601
312-565-0450 Job No. 10061

FILENAME : 081177-C00AB-AnchorageSlabAddenda.dgn	USER NAME : kplaczek	DESIGNED - SLD	REVISED - △1 05/16/17	STATE OF ILLINOIS DEPARTMENT OF TRANSPORTATION	ANCHORAGE SLAB DETAILS I-74 WESTBOUND	F.A.I. RTE.	SECTION	COUNTY	TOTAL SHEETS	SHEET NO.
		CHECKED - KMP	REVISED -			74	(81-1)R & (81-1)(HVBR)	ROCK ISLAND	1504	1181
	PLOT SCALE :	DRAWN - KMS	REVISED -					CONTRACT NO. 64C08		
MODEL : MSAnchor.dgn	PLOT DATE : 5/26/2017	CHECKED - KMP	REVISED -		SHEET NO. A16 OF A20 SHEETS		ILLINOIS FED. AID PROJECT			

5/26/2017 5:27:31 PM c:\pwise_work\do_not_delete\dms02470\081177-C00AB-AnchorageSlabAddenda.dgn

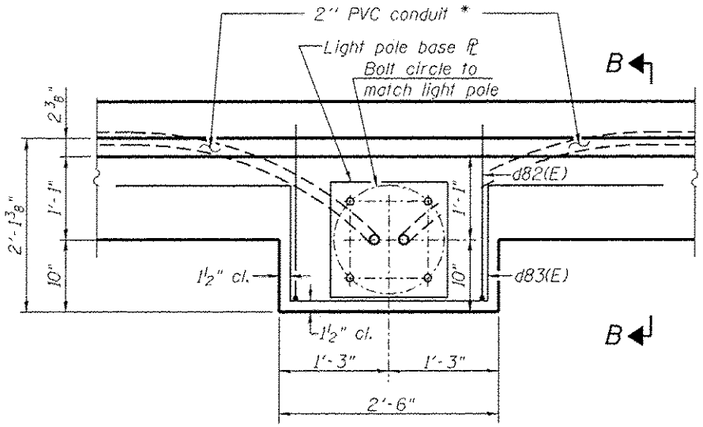

PLAN - LIGHT POLE BASE

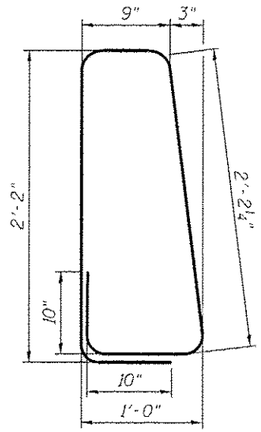

BAR d80(E)

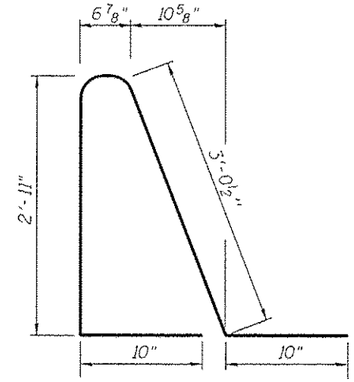

BAR d81(E)

BILL OF MATERIAL
WESTBOUND

Bar	No.	Size	Length	Shape
d83(E)	24	#5	2'-0"	
d84(E)	12	#5	5'-0"	
d85(E)	947	#6	9'-11"	
d86(E)	474	#5	9'-3"	
d95(E)	236	#6	2'-0"	
b81(E)	80	#5	27'-0"	
b83(E)	320	#5	29'-3"	
b86(E)	20	#5	29'-8"	
b87(E)	40	#5	9'-7"	
d80(E)	945	#5	7'-10"	
d81(E)	515	#5	8'-3"	
d82(E)	3	#6	4'-5"	
d83(E)	5	#6	8'-11"	
e81(E)	39	#6	29'-8"	
e82(E)	13	#8	29'-8"	
e83(E)	180	#6	14'-8"	
e88(E)	9	#6	14'-2"	
e89(E)	3	#6	26'-6"	
e90(E)	1	#8	26'-6"	
e91(E)	6	#6	11'-6"	
e92(E)	2	#8	14'-8"	
e93(E)	9	#6	9'-8"	
e94(E)	1	#8	9'-8"	
e110(E)	1	#8	14'-3"	
Concrete Superstructure			Cu. Yd.	229.3
Reinforcement Bars, Epoxy Coated			Pound	52,270
Protective Coat			Sq. Yd.	619.7

Bars indicated thus 1 x 5-#5 etc. indicates 1 line of bars with 5 lengths per line.

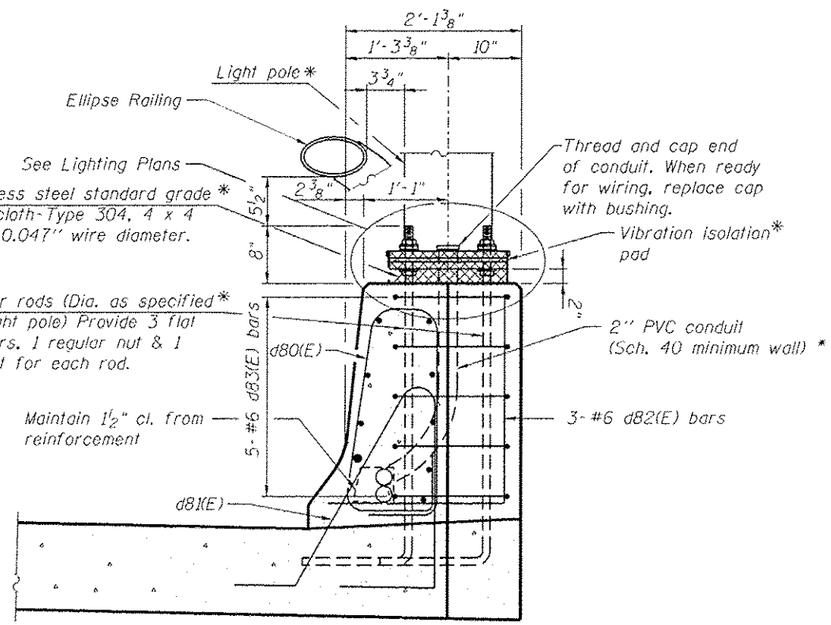

SECTION B-B

* See lighting plans for details and pay items

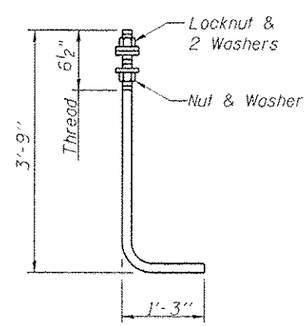

ANCHOR ROD

Diameter as specified for light poles (ASTM F 1554 Grade 105). Full length hot dipped galvanized. Anchor bolts included in the cost of Concrete Superstructure.

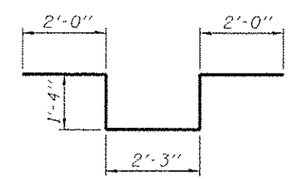

BAR d83(E)

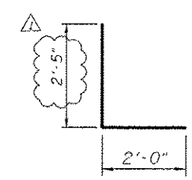

BAR d82(E)

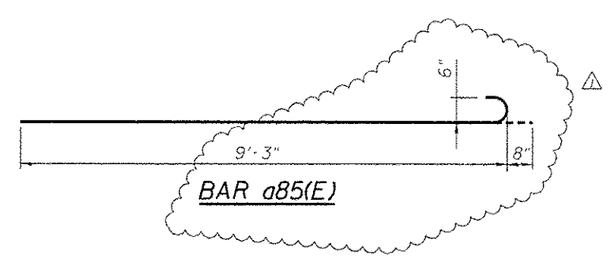

BAR d85(E)

benesch
Alfred Benesch & Company
205 North Michigan Avenue, Suite 2400
Chicago, Illinois 60601
312-565-0450 Job No. 10061

FILENAME = 0810177-C00AB-AnchorageSlabAddenda.dgn	USER NAME = kplaczek	DESIGNED - SLD	REVISED -
		CHECKED - KMP	REVISED -
	PLOT SCALE =	DRAWN - KMS	REVISED -
MODEL =	PLOT DATE = 5/26/2017	CHECKED - KMP	REVISED -

STATE OF ILLINOIS
DEPARTMENT OF TRANSPORTATION

ANCHORAGE SLAB DETAILS
I-74 WESTBOUND

SHEET NO. ANT OF AN20 SHEETS

F.A.I. RTE.	SECTION	COUNTY	TOTAL SHEETS	SHEET NO.
74	(81-1)R & (81-1)HVBR)	ROCK ISLAND	1504	1182
		CONTRACT NO. 64C08		
		ILLINOIS FED. AID PROJECT		

5/26/2017 5:27:38 PM c:\pwise_work\do_not_delete\dms62470\0810177-C00AB-AnchorageSlabAddenda.dgn

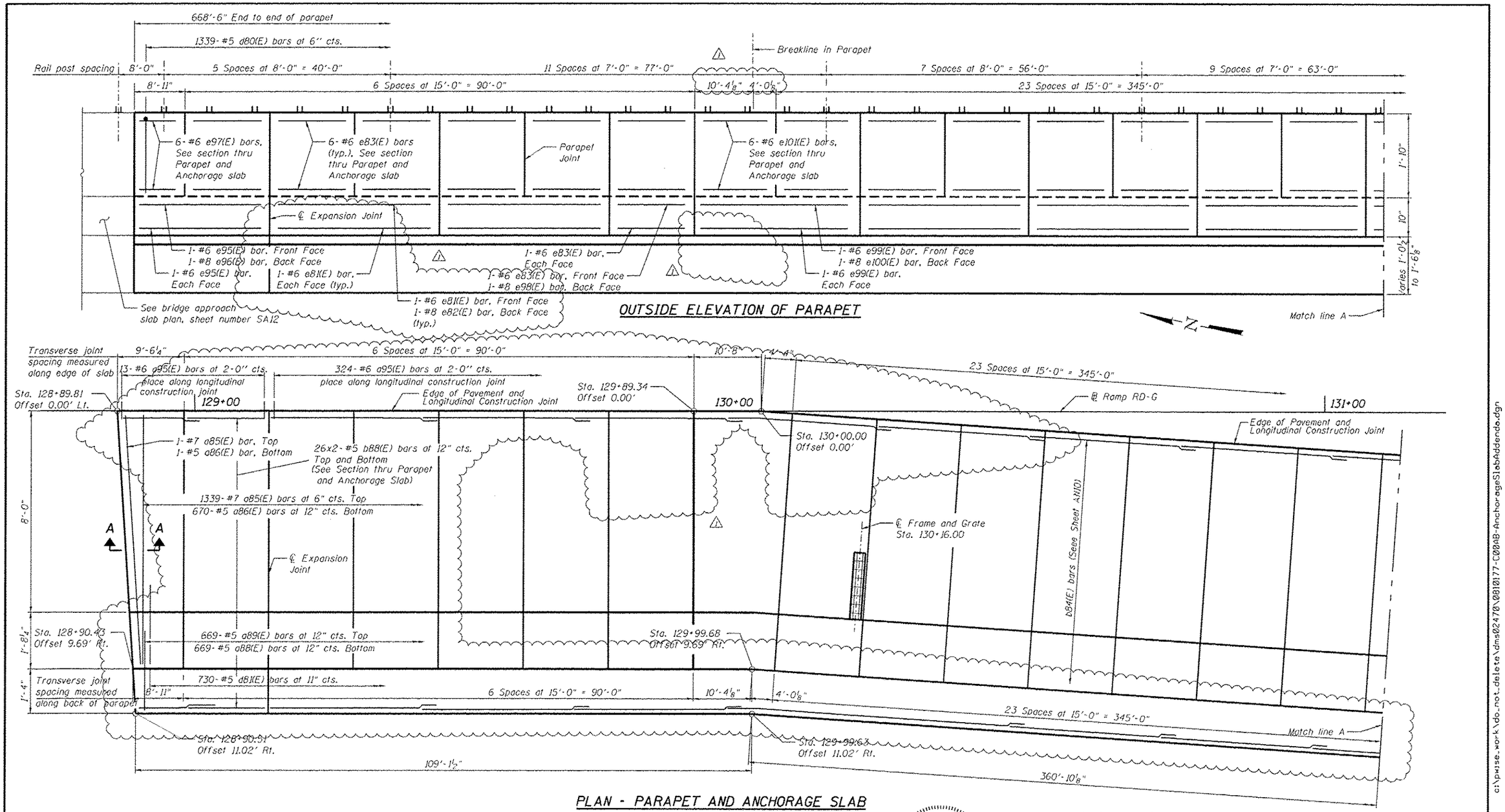

Min. Bar Lap #5 Bar = 2'-7"

Notes:

For Section Thru Parapet and Anchorage Slab and Section A-A, see Sheet AN11.
For Bill of Material, see Sheet AN12.
Bars indicated thus 3x7-#5 etc. indicates 3 lines of bars with 7 lengths per line.
Joints in the adjacent pavement shall be aligned with the anchorage slab joints.
Stations and offsets on this sheet are given to the outside face of the parapet and are measured from the baseline Ramp RD-G, except as noted.
For Frame and Grate Details, see Drainage Plans.

KEVIN M. PLACZEK
081-005460
LICENSED STRUCTURAL ENGINEER
STATE OF ILLINOIS

EXPIRATION DATE 11-30-2018
DATE: 5-26-2017

benesch
Alfred Benesch & Company
205 North Michigan Avenue, Suite 2400
Chicago, Illinois 60601
312-565-0450 Job No. 10061

FILENAME = 0810177-C00AB-AnchorageSlabAddenda.dgn
MODEL = RPGAnchor1

USER NAME = kplaczek	DESIGNED - SLD	REVISED - 1 05/16/17	
	CHECKED - KMP	REVISED -	
PLOT SCALE =	DRAWN - KMS	REVISED -	
PLOT DATE = 5/26/2017	CHECKED - KMP	REVISED -	

STATE OF ILLINOIS
DEPARTMENT OF TRANSPORTATION

ANCHORAGE SLAB PLAN AND ELEVATION
RAMP RD-G

SHEET NO. AN8 OF AN20 SHEETS

F.A.I. RTE.	SECTION	COUNTY	TOTAL SHEETS	SHEET NO.
74	(81-1)R & 81-1(HVBR)	ROCK ISLAND	1504	1183
		CONTRACT NO. 64C08		
		ILLINOIS FED. AID PROJECT		

c:\pwise_work\do_not_delete\dms02478\0810177-C00AB-AnchorageSlabAddenda.dgn
5:27:44 PM
5/26/2017

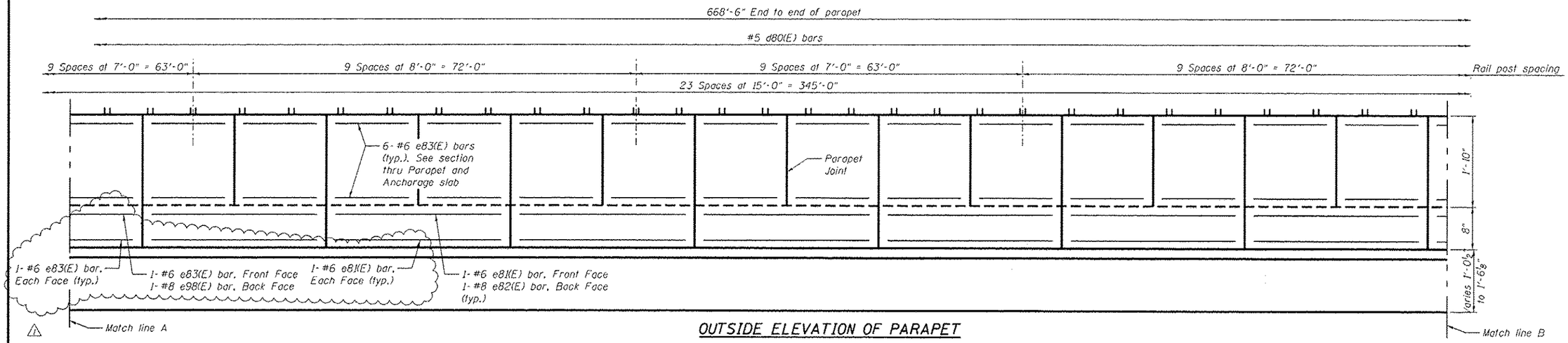

OUTSIDE ELEVATION OF PARAPET

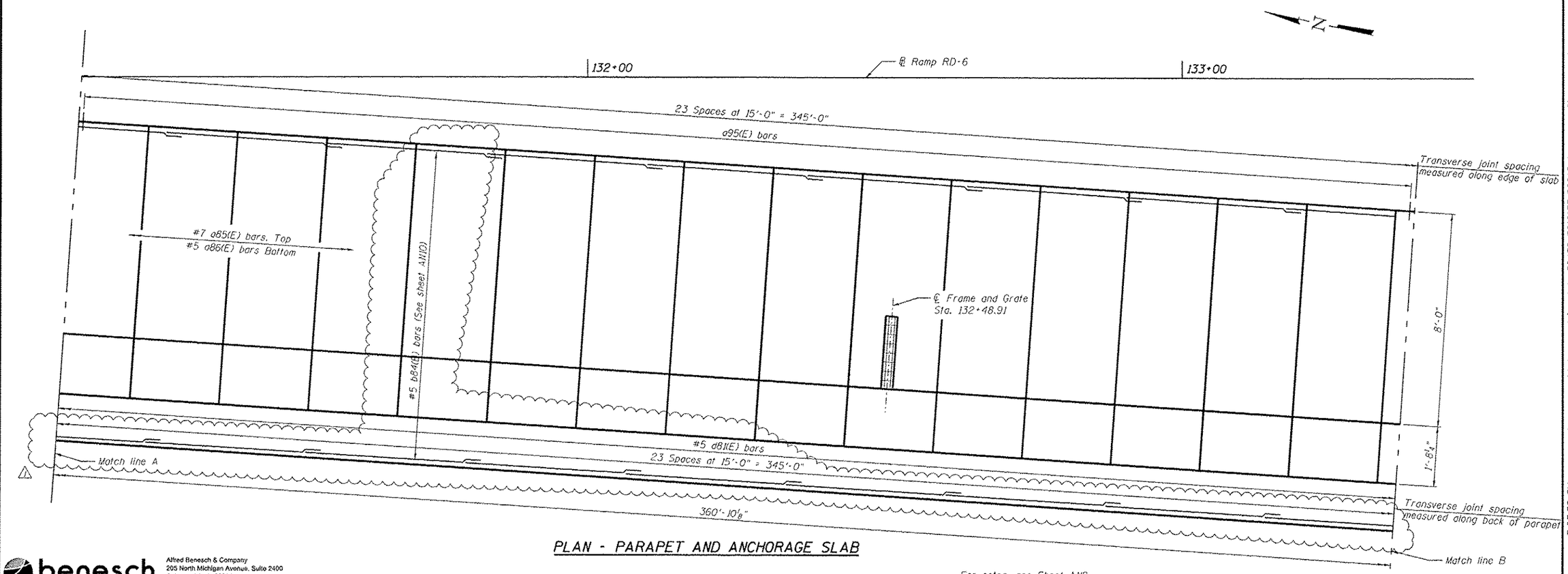

PLAN - PARAPET AND ANCHORAGE SLAB

For notes, see Sheet AN8.

benesch
Alfred Benesch & Company
205 North Michigan Avenue, Suite 2400
Chicago, Illinois 60601
312-565-0450 Job No. 10061

FILENAME = 0810177-C00AB-AnchorageSlabAddenda.dgn	USER NAME = kpleczek	DESIGNED - SLD	REVISED - 1 05/16/17	STATE OF ILLINOIS DEPARTMENT OF TRANSPORTATION	ANCHORAGE SLAB PLAN AND ELEVATION RAMP RD-G
		CHECKED - KMP	REVISED -		
	PLOT SCALE =	DRAWN - KMS	REVISED -		
MODEL = RPGAnchor-2	PLOT DATE = 5/26/2017	CHECKED - KMP	REVISED -		SHEET NO. AN9 OF AN20 SHEETS

F.A.I. RTE.	SECTION	COUNTY	TOTAL SHEETS	SHEET NO.
74	(81-1)R & 81-1(HVBR)	ROCK ISLAND	1504	1184
		CONTRACT NO. 64C08		
		ILLINOIS FED. AID PROJECT		

c:\pwise_work\do_not_delete\dms02470\0810177-C00AB-AnchorageSlabAddenda.dgn 5:27:50 PM 5/26/2017

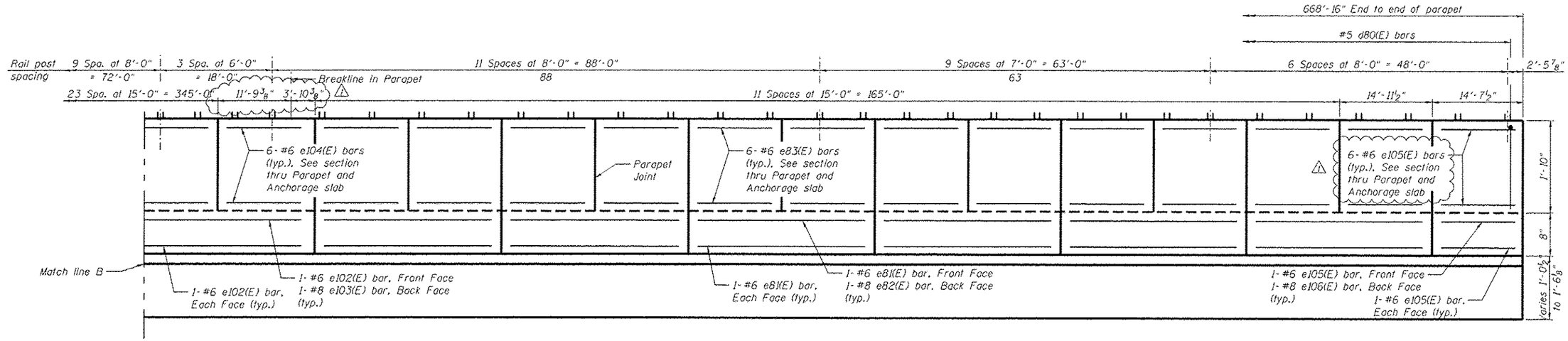

OUTSIDE ELEVATION OF PARAPET

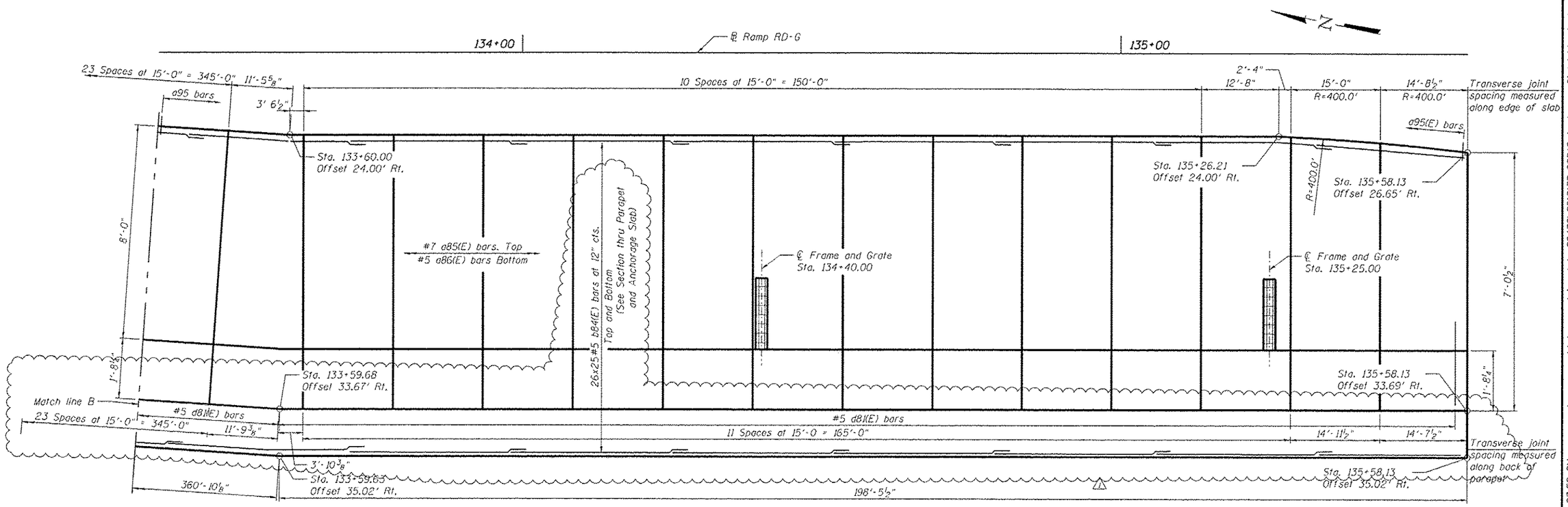

PLAN - PARAPET AND ANCHORAGE SLAB

benesch

Alfred Benesch & Company
205 North Michigan Avenue, Suite 2400
Chicago, Illinois 60601
312-565-0450 Job No. 10061

FILENAME = 0818177-C00AB-AnchorageSlabAddenda.dgn	USER NAME = kplaczek	DESIGNED - SLD	REVISED - 1 05/16/17	STATE OF ILLINOIS DEPARTMENT OF TRANSPORTATION	ANCHORAGE SLAB PLAN AND ELEVATION RAMP RD-G	F.A.I. RTE.	SECTION	COUNTY	TOTAL SHEETS / SHEET NO.
		CHECKED - KMP	REVISED -			74	(81-1)R & 81-1(HVBR)	ROCK ISLAND	1504 / 1185
MODEL = RR2Anchor-3	PLOT SCALE =	DRAWN - KMS	REVISED -					CONTRACT NO. 64C08	
	PLOT DATE = 5/26/2017	CHECKED - KMP	REVISED -		SHEET NO. A110 OF A120 SHEETS			ILLINOIS FED. AID PROJECT	

c:\pwise_work\do_not_delete\dms82470\0818177-C00AB-AnchorageSlabAddenda.dgn 5:27:59 PM 5/26/2017

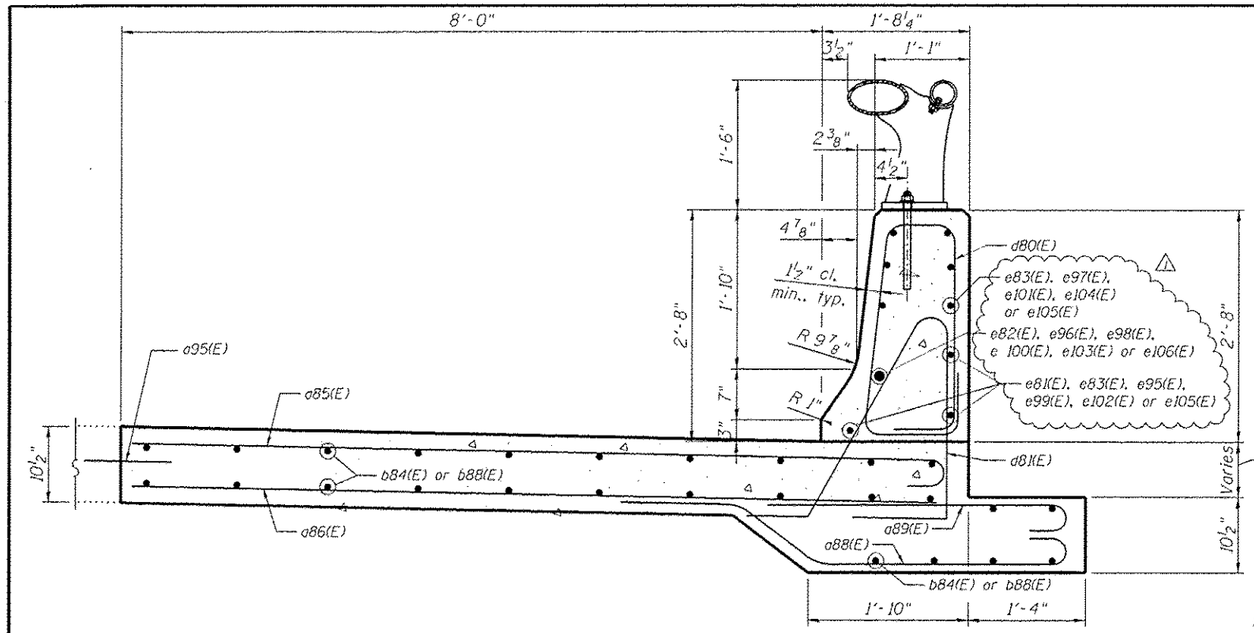

SECTION THRU PARAPET AND ANCHORAGE SLAB

(Looking South)

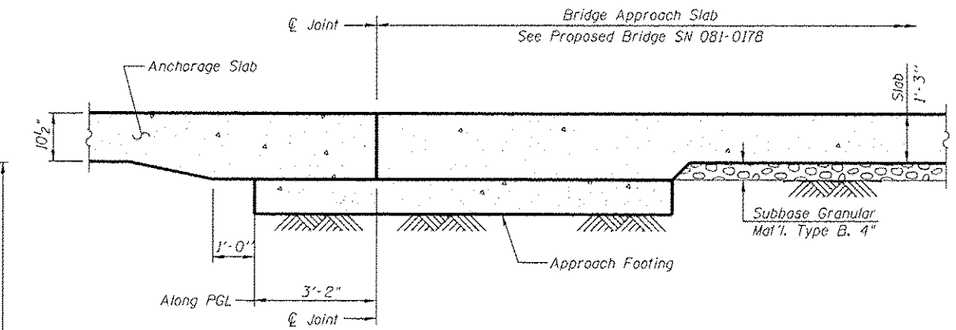

SECTION A-A

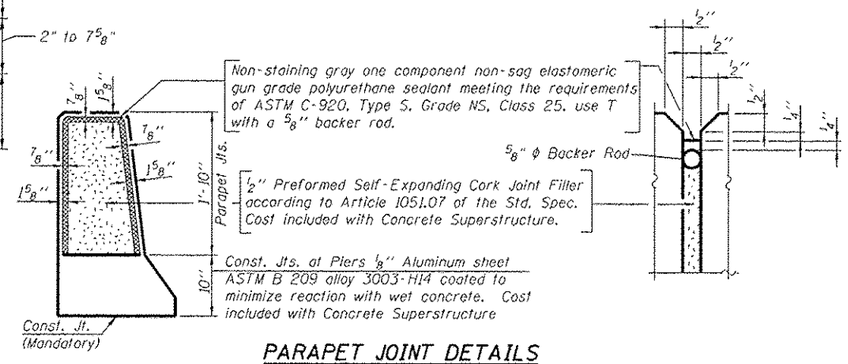

PARAPET JOINT DETAILS

(For Conventional Concrete Placement)

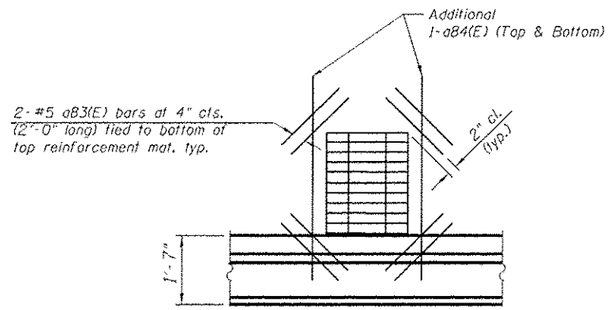

PLAN AT DRAINAGE STRUCTURE

(Cut longitudinal reinforcement to clear drainage structure.)

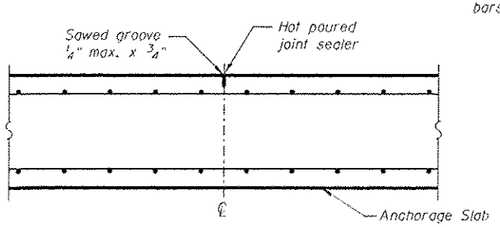

TRANSVERSE CONTRACTION JOINT

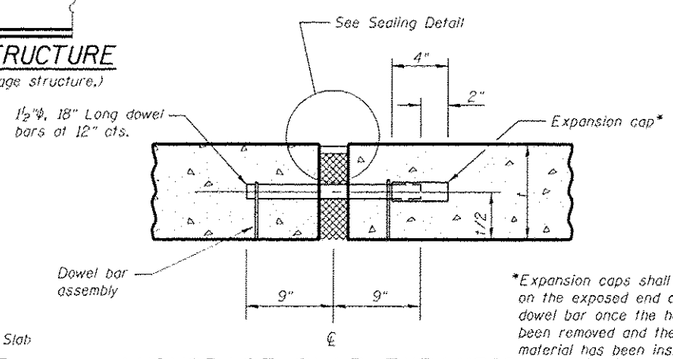

*Expansion caps shall be installed on the exposed end of each dowel bar once the header has been removed and the joint filler material has been installed.

ANCHORAGE SLAB EXPANSION JOINT

Expansion joint and dowel bars included in the cost of Concrete Superstructure.

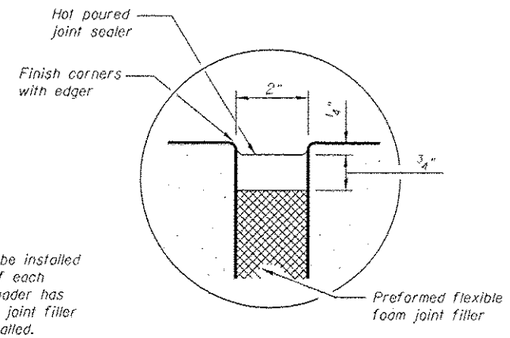

SEALING DETAIL

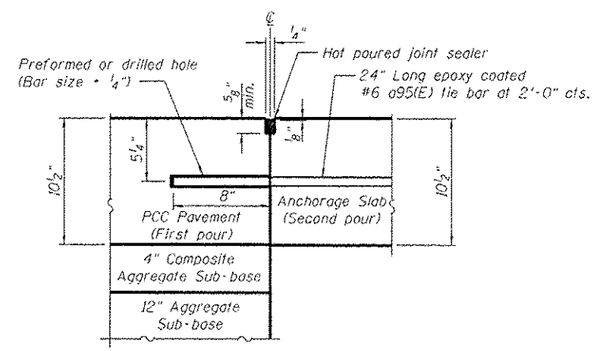

Notes:
The Contractor may substitute at his option, formed in place tie bars provided the bar length is increased to 30" and the tie bar is centered across the joint.
Preformed or drilled hole shall be in the first pour.

LONGITUDINAL CONSTRUCTION JOINT GROUTED-IN-PLACE TIE BAR

benesch
Alfred Benesch & Company
205 North Michigan Avenue, Suite 2400
Chicago, Illinois 60601
312-565-0450 Job No. 10061

FILENAME = 081017-C00AB-AnchorageSlabAddenda.dgn	USER NAME = kplaczek	DESIGNED - SLD	REVISED - △ 05/16/17	STATE OF ILLINOIS DEPARTMENT OF TRANSPORTATION	ANCHORAGE SLAB DETAILS RAMP RD-G	F.A.I. RTE.	SECTION	COUNTY	TOTAL SHEETS	SHEET NO.
		CHECKED - KMP	REVISED -			74	(81-1)R & 81-1(HV)(R)	ROCK ISLAND	1504	1186
MODEL = RPCAnchor_Det	PLOT SCALE =	DRAWN - KMS	REVISED -					CONTRACT NO. 64C08		
	PLOT DATE = 5/26/2017	CHECKED - KMP	REVISED -		SHEET NO. AN11 OF AN20 SHEETS		ILLINOIS FED. AID PROJECT			

5/26/2017 5:28:07 PM c:\pwise_work\do_not_delete\dms02470\081017-C00AB-AnchorageSlabAddenda.dgn

BILL OF MATERIAL
RAMP RD-G

Bar	No.	Size	Length	Shape
a83(E)	32	#5	2'-0"	
a84(E)	16	#5	5'-0"	
a85(E)	1340	#7	10'-1"	
a86(E)	671	#5	9'-3"	
a88(E)	669	#5	5'-5"	
a89(E)	669	#5	3'-9"	
a95(E)	337	#6	2'-0"	
b84(E)	650	#5	28'-6"	
b88(E)	52	#5	13'-6"	
d80(E)	1339	#5	7'-10"	
d81(E)	730	#5	8'-3"	
e81(E)	54	#6	29'-8"	
e82(E)	18	#8	29'-8"	
e83(E)	252	#6	14'-8"	
e95(E)	3	#6	23'-7"	
e96(E)	1	#8	23'-7"	
e97(E)	6	#6	8'-7"	
e98(E)	2	#8	14'-8"	
e99(E)	3	#6	29'-0"	
e100(E)	1	#8	29'-0"	
e101(E)	6	#6	14'-0"	
e102(E)	3	#6	30'-2"	
e103(E)	1	#8	30'-2"	
e104(E)	6	#6	15'-2"	
e105(E)	9	#6	14'-3"	
e106(E)	1	#8	14'-3"	
Concrete Superstructure			Cu. Yd.	334.9
Reinforcement Bars, Epoxy Coated			Pound	89,560
Protective Coat			Sq. Yd.	871.4

Bars indicated thus 1 x 3-#5 etc. indicates 1 line of bars with 3 lengths per line.

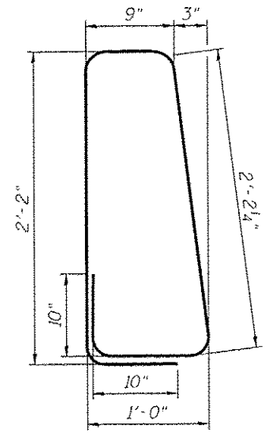

BAR d80(E)

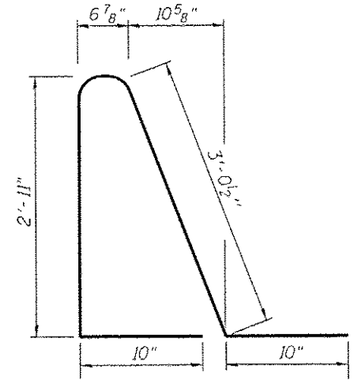

BAR d81(E)

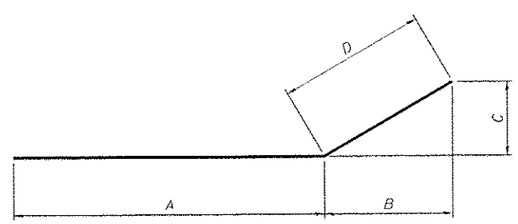

BARS e99(E) to e104(E)

BARS e99(E) to e104(E)

Bar	A	B	C	D	Length
e99(E)	18'-10"	10'-1⅜"	8⅛"	10'-2"	29'-0"
e100(E)	18'-10"	10'-1⅜"	8⅛"	10'-2"	29'-0"
e101(E)	10'-2"	3'-9⅞"	3"	3'-10"	14'-0"
e102(E)	26'-6½"	3'-7⅜"	2⅞"	3'-7½"	30'-2"
e103(E)	26'-6½"	3'-7⅜"	2⅞"	3'-7½"	30'-2"
e104(E)	11'-6½"	3'-7⅜"	2⅞"	3'-7½"	15'-2"

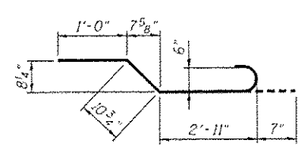

BAR a88(E)

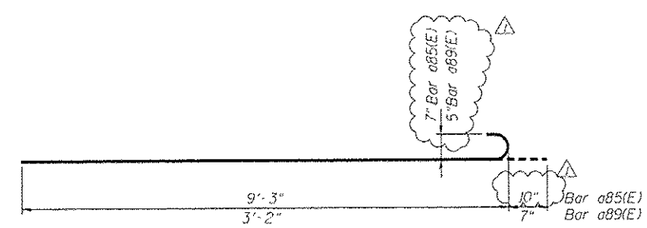

BARS a85(E) and a89(E)

benesch
Alfred Benesch & Company
205 North Michigan Avenue, Suite 2400
Chicago, Illinois 60601
312-565-0450 Job No. 10061

FILENAME = 68B0177-C00AB-AnchorageSlabAddenda.dgn	USER NAME = ksnider	DESIGNED - SLD	REVISED - 05/16/17
		CHECKED - KMP	REVISED -
	PLOT SCALE =	DRAWN - KMS	REVISED -
MODEL = RPGenerator_Det 2	PLOT DATE = 5/30/2017	CHECKED - KMP	REVISED -

STATE OF ILLINOIS
DEPARTMENT OF TRANSPORTATION

ANCHORAGE SLAB DETAILS
RAMP RD-G

SHEET NO. AN12 OF AN20 SHEETS

F.A.I. RTE.	SECTION	COUNTY	TOTAL SHEETS	SHEET NO.
74	(B1-1)R & B1-1(HVBR)	ROCK ISLAND	1504	1187

CONTRACT NO. 64C08

ILLINOIS FED. AID PROJECT

c:\pwise_work\do_not_delete\dms02470\0B10177-C00AB-AnchorageSlabAddenda.dgn 1:50:41 PM 5/30/2017

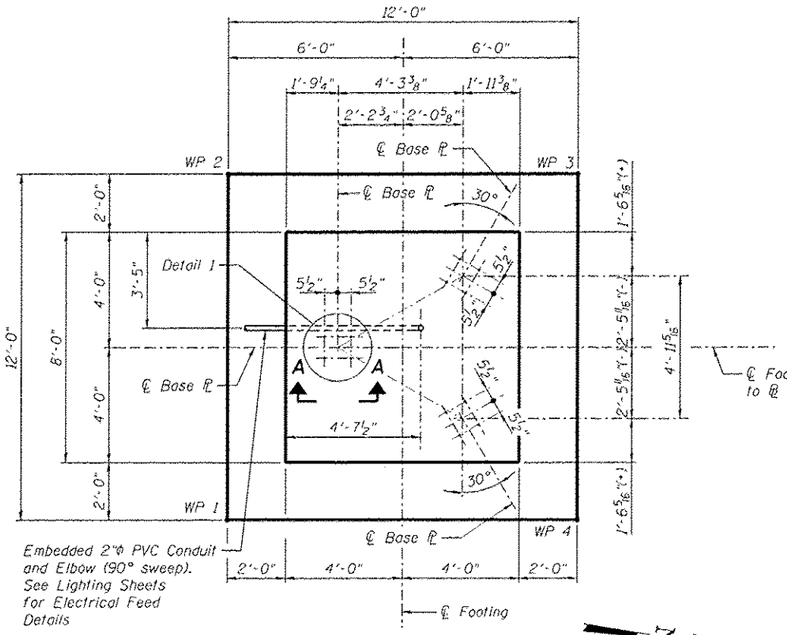

FOUNDATION PLAN

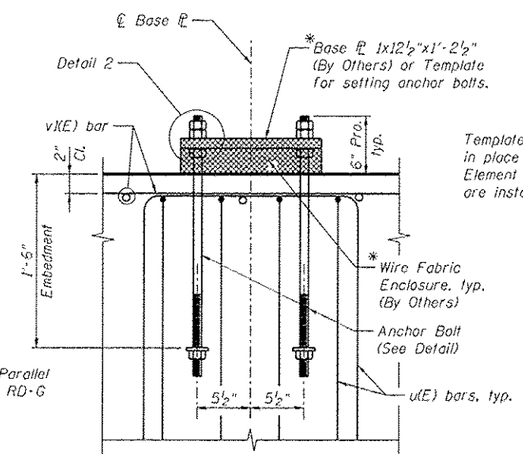

VIEW A-A
(Typ. for 3 locations)

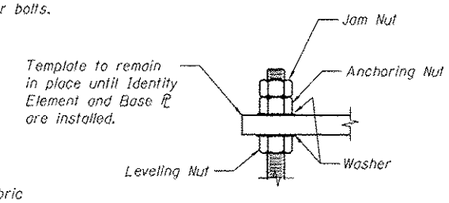

DETAIL 2

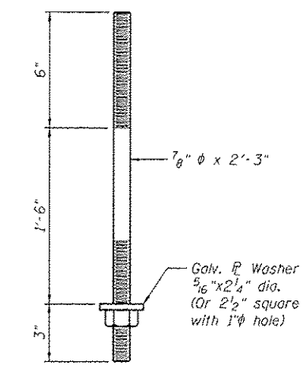

ANCHOR BOLT DETAIL

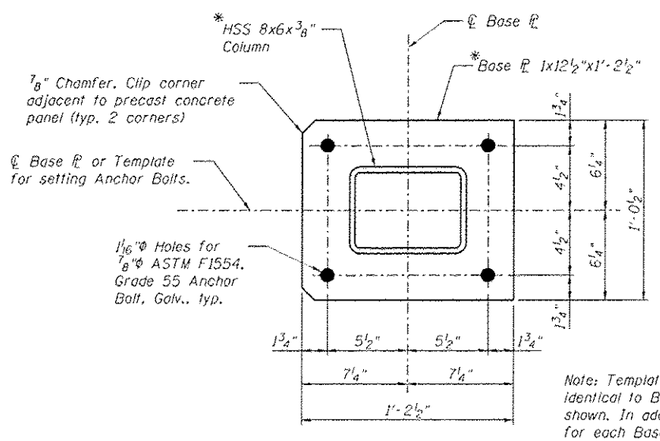

Note: Template geometry shall be identical to Base ℙ geometry shown. In addition, each template for each Base ℙ must be held in exact orientation and distance from each other, as shown in Foundation Plan.

DETAIL 1
ANCHOR BOLT LAYOUT

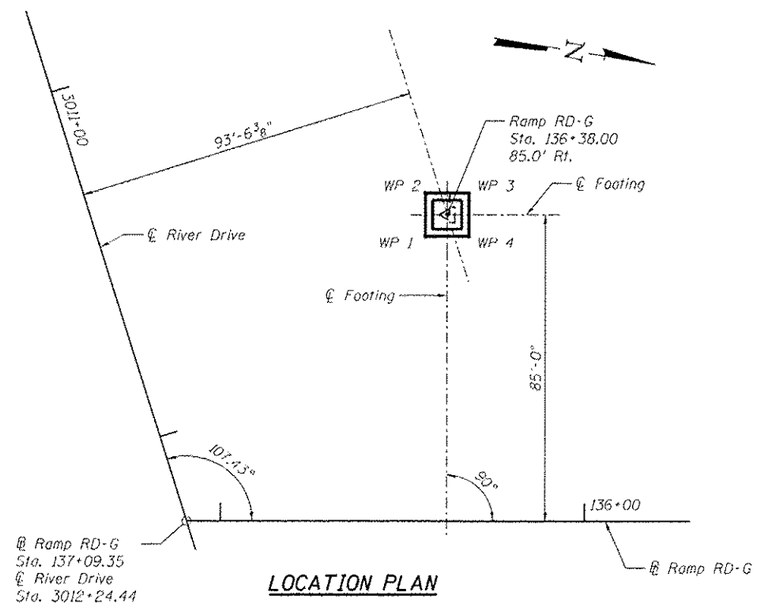

LOCATION PLAN

Work Points

W.P.	Station	Offset
1	136+44.00	79.00' Rt.
2	136+44.00	91.00' Rt.
3	136+32.00	91.00' Rt.
4	136+32.00	79.00' Rt.

Based on ℙ Ramp RD-G

NOTES:

1. Anchor Bolts shall be ⅞"φ ASTM, F1554, Grade 55. Anchor Bolts, nuts and washers shall conform to the requirements of the Standard Specifications.
2. Anchor Bolts, nuts and washers shall be hot dip galvanized according to AASHTO M232, Class C.
3. *Base Plates, HSS Column and Wire Fabric are shown for Information Only. Base Plates and Wire Fabric material shall be included in Identity Element, to be constructed by Others.
4. Nuts and washers shall be hand-tightened on Anchor Bolt projections, for future use when Identity Elements are installed.
5. The Contractor shall take care to secure Anchor Bolts plumb and in the correct location. The Contractor shall leave the template, used to set the Anchor bolts, in place to protect the Anchor bolts until the Identity Element is installed by Others.
6. The maximum applied service bearing pressure is 2.3 ksf.
7. Work this sheet with Foundation Reinforcement Details sheet.
8. Reinforcement bars designated (E) shall be epoxy coated.

benesch
engineers · scientists · planners
Alfred Benesch & Company
205 North Michigan Avenue, Suite 2400
Chicago, Illinois 60601
312-565-0450 Job No. 10061

FILE NAME = 64C08A-001-Identity Element Foundations (2 sheets).dgn	USER NAME = kenider	DESIGNED - SLD	REVISED - 05/16/17
		CHECKED - KMP	REVISED -
	PLOT SCALE =	DRAWN - RMG	REVISED -
MODEL: Default	PLOT DATE = 5/11/2017	CHECKED - KMP	REVISED -

STATE OF ILLINOIS
DEPARTMENT OF TRANSPORTATION

FOUNDATION DETAILS
NEIGHBORHOOD IDENTITY ELEMENT, RAMP RD-G

SHEET NO. 8 OF 13 SHEETS

F.A.I. RTE.	SECTION	COUNTY	TOTAL SHEETS	SHEET NO.
74	(B1-1)R & B1-1(HVBR)	ROCK ISLAND	1504	1206
		CONTRACT NO. 64C08		
		ILLINOIS FED. AID PROJECT		

5/11/2017 10:14:49 AM c:\pwise_work\do_not_delete\dms94482\64C08A-001-Identity Element Foundations (2 sheets).dgn

CATCH BASIN OR INLETS TO BE ADJUSTED OR RECONSTRUCTED
(DETAILS FOR CURB & GUTTER REPLACEMENT)

CONCRETE CURB AND GUTTER SHALL BE CONSTRUCTED IN ACCORDANCE WITH SECTION 606 OF THE STANDARD SPECIFICATIONS, SUPPLEMENTAL SPECIFICATIONS, STANDARD 606001 AND THIS DRAWING.

CLASS SI CONCRETE SHALL BE USED THROUGHOUT. A HOLE 1-1/2 IN DIAMETER AND 9 DEEP SHALL BE DRILLED IN THE EXISTING CONCRETE CURB AS SHOWN. A 1-1/4 X 18 SMOOTH DOWEL BAR SHALL BE GROUTED IN THE HOLE LONGITUDINALLY.

JOINTS OF A TYPE SIMILAR TO THAT IN THE UNDERLYING PAVEMENT (EXPANSION OR CONTRACTION) SHALL BE INSTALLED IN THE CONCRETE CURB IN ALIGNMENT WITH THE JOINTS IN THE PAVEMENT.

THE PROPOSED CONFIGURATION OF THE CURB AND GUTTER SHALL MATCH THAT REMOVED.

THE LOCATION OF THE DOWEL BAR SHALL BE DETERMINED BY THE ENGINEER.

ALL EXISTING TIE BARS IN EDGE OF PAVEMENT SLAB THRU REPLACEMENT AREA SHALL BE CUT OFF.

THE WORK SHALL BE DONE IN ACCORDANCE WITH SECTION 602 OF THE STANDARD SPECIFICATIONS AND INCLUDES THE REMOVAL AND REPLACEMENT OF SOD, CONCRETE PAVEMENT AND/OR CURB AND GUTTER ADJACENT TO CATCH BASINS OR INLETS TO BE ADJUSTED OR RECONSTRUCTED AND SHALL BE INCLUDED IN THE PAY ITEM OF CATCH BASINS OR INLETS TO BE ADJUSTED OR RECONSTRUCTED AS SPECIFIED.

REVISED - 9-30-11

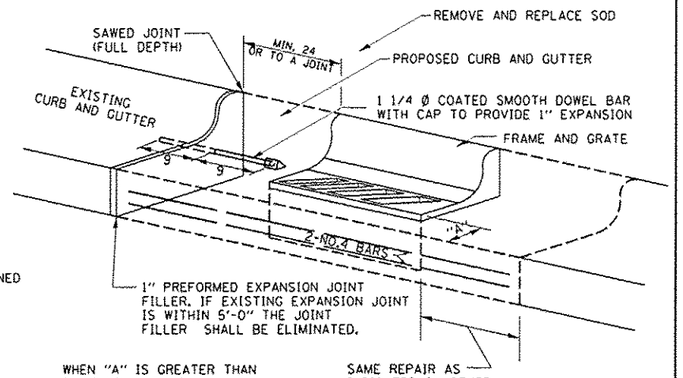

ALL DIMENSIONS ARE IN INCHES UNLESS OTHERWISE NOTED.

⚠ 05/16/17

CONCRETE REVETMENT MAT AT END SECTIONS

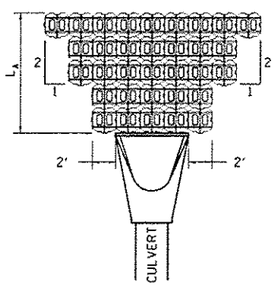

FLARED END SECTION

L_A = APRON LENGTH (ft)

IF THE CULVERT OUTLETS INTO A DEFINED CHANNEL, INSTALL BLOCK BANK TO BANK FOR LENGTH (L_A).

STANDARD END SECTION:
542001 (PIPE), 542011 (ELLIPTICAL)
DISTRICT STANDARD 10.1 (BOX).

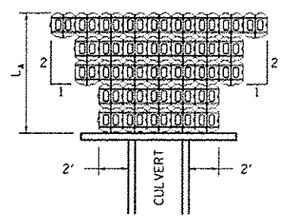

CULVERT WITH HEADWALL

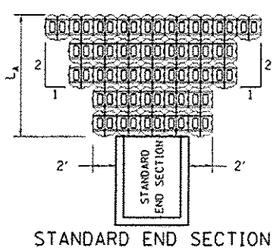

STANDARD END SECTION

REVISED - 7-13-16
REVISED - 11-12-14

Station	Offset	Velocity (ft/sec)	Slope (ft/ft)	Depth of Flow (ft)	Shear Stress (lb/ft²)
421+77	41.1' LT	5.97	0.5% (MIN)	0.43	0.13

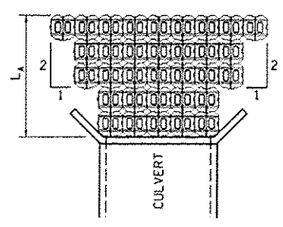

CULVERT WITH WING WALLS

CONCRETE HEADWALLS FOR PIPE DRAINS

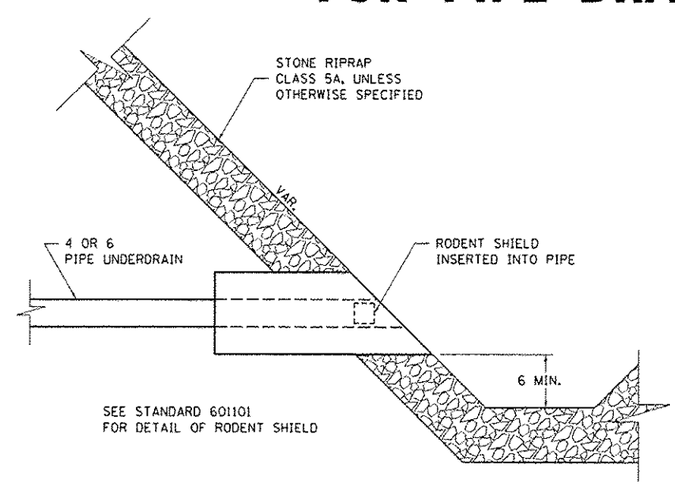

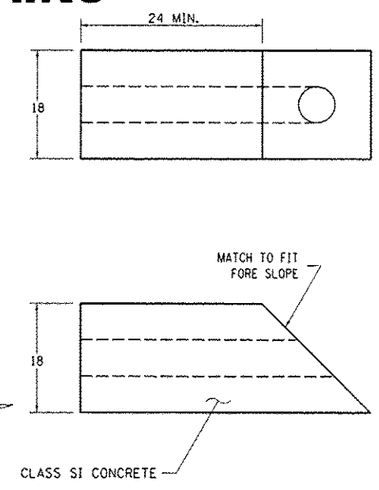

ALL DIMENSIONS ARE IN INCHES UNLESS OTHERWISE NOTED.

REVISED - 11-12-14	REGION 2 / DISTRICT 2 STANDARD			F.A.I RTE.	SECTION	COUNTY	TOTAL SHEETS	SHEET NO.
REVISED - 10-03-11				74	(81-1)R & 81-1HVBR	ROCK ISLAND	1504	1219
REVISED -						CONTRACT NO. 64C08		
REVISED -	SCALE:	SHEET NO. OF SHEETS	STA. TO STA.			ILLINOIS FED. AID PROJECT		

LAYOUT	CBP	11/20/2014
DGN(MN)	CBP	11/20/2014
REVIEWED	AJP	10/21/2015

PLOT DATE = 4/11/2017

DETAIL OF CONCRETE STEPS

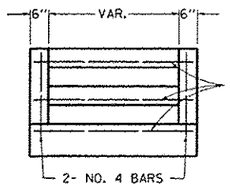

END ELEVATION

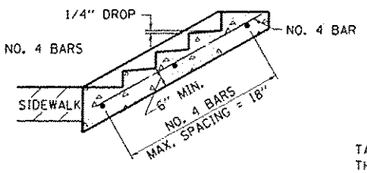

SECTION A-A

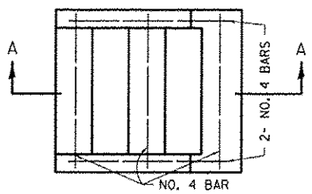

PLAN

TABLE OF TREADS & RISERS

SLOPE	TREAD	RISER
1:2	12"	6"
1:3	15"	5"
1:4	17"	4 1/4"

WHERE SLOPES FALL BETWEEN THOSE SHOWN IN THE TABLE ABOVE, THE STAIR RAIL SHOULD FIT THE SLOPE AND THE TREAD IN INCHES × THE RISER IN INCHES SHOULD BE BETWEEN 72 AND 78.

EXAMPLE:

FOR A 1:4 SLOPE USE y = RISER HEIGHT $4y^2 = 75''$.
SOLVING $y^2 = \frac{75''}{4}$, y= 4.3" (USE 4 1/4" FOR CONVENIENCE.)

TREAD WOULD THEN BE 4 1/4" × 4 = 17"

COST OF REINFORCEMENT BARS SHALL BE PAID FOR AT THE CONTRACT UNIT PRICE PER LBS FOR REINFORCEMENT BARS.

CLASS SI CONCRETE SHALL BE USED THROUGHTOUT, WHICH SHALL BE PAID FOR AT THE CONTRACT UNIT PRICE PER CUBIC YARD FOR CONCRETE STEPS

ALL DIMENSIONS ARE IN INCHES UNLESS OTHERWISE NOTED.

REVISED - 8-27-13
REVISED - 10-03-11

DETAIL OF CONCRETE STEPS 71.4

SUBGRADE REPLACEMENT

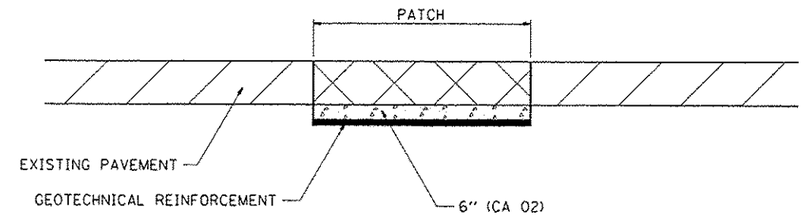

NOTES:

THE CA 02 SHALL BE COMPACTED IN A MANNER APPROVED BY THE ENGINEER. IF THE MOISTURE CONTENT OF THE MATERIAL IS SUCH THAT COMPACTION SATISFACTORY TO THE ENGINEER CANNOT BE OBTAINED, SUFFICIENT WATER SHALL BE ADDED SO THAT SATISFACTORY COMPACTION CAN BE OBTAINED.

THE CA 02 SHALL BE PAID FOR AT THE CONTRACT UNIT PRICE PER CU YD FOR AGGREGATE SUBGRADE IMPROVEMENT WHICH SHALL ALSO INCLUDE ALL EARTH EXCAVATION.

THE GEOTECHNICAL REINFORCEMENT WILL BE PAID FOR AT THE CONTRACT UNIT PRICE PER SQ YD FOR GEOTECHNICAL REINFORCEMENT.

ALL DIMENSIONS ARE IN INCHES UNLESS OTHERWISE NOTED.

REVISED - 3-13-13

SUBGRADE REPLACEMENT 97.4

INLETS TO BE RECONSTRUCTED WITH NEW STANDARD 542546 FRAME AND GRATE

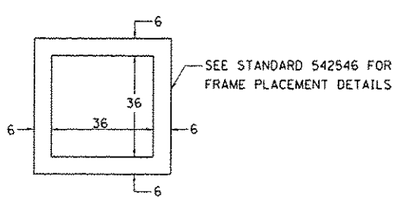

PLAN VIEW

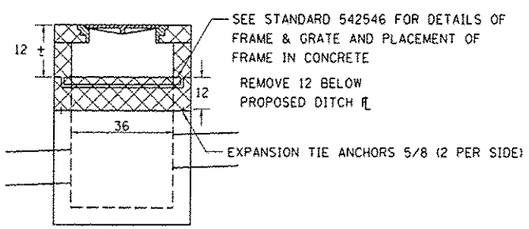

REVISED - 10-05-11

NOTES:

THIS WORK SHALL BE DONE IN ACCORDANCE WITH STANDARD 542546 AND THIS DETAIL.

CLASS SI CONCRETE SHALL BE USED THROUGHOUT. THE PROPOSED TOP CAN BE CAST IN PLACE OR PRECAST.

THE EXISTING FRAME & GRATE SHALL BE REMOVED AND DISPOSED OF BY THE CONTRACTOR.

THE CONCRETE SHALL BE REMOVED BY DRILLING, CHIPPING, SAWING, OR OTHER METHOD APPROVED OF BY THE ENGINEER.

THIS WORK SHALL BE PAID FOR AT THE CONTRACT UNIT PRICE EACH FOR INLETS TO BE RECONSTRUCTED WITH NEW STANDARD 542546 FRAME AND GRATE WHICH SHALL INCLUDE REMOVING THE FRAME & GRATE & CONCRETE, EXPANSION TIE ANCHORS, CLASS SI CONCRETE, AND FURNISHING & INSTALLING FRAME & GRATE (EITHER STEEL OR DUCTILE IRON).

ALL DIMENSIONS ARE IN INCHES UNLESS OTHERWISE NOTED.

⚠ 05/16/17

INLETS TO BE RECONSTRUCTED WITH NEW STANDARD 542546 FRAME AND GRATE 80.4

1/20/2017

LAYOUT	CBP	11/20/2014
DRAWN	CBP	11/20/2014
REVIEWED	AMP	10/21/2015

REVISED -	REGION 2 / DISTRICT 2 STANDARD					
REVISED -						
REVISED -						
REVISED -	SCALE:	SHEET NO. OF SHEETS	STA.	TO STA.		

F.A.I RTE.	SECTION	COUNTY	TOTAL SHEETS	SHEET NO.
74	(81-1)R & 81-1HVBR	ROCK ISLAND	1504	1221
		CONTRACT NO. 64C08		
		ILLINOIS FED. AID PROJECT		

PLOT DATE = 4/26/2017

TERMINATION OF DEAD END ROADS

NOTES: A "NO OUTLET" (36"x36" YELLOW) SIGN SHALL BE ERECTED SLIGHTLY BEYOND THE LAST ROAD INTERSECTING THE ROAD WITH NO OUTLET. IF THIS INTERSECTION IS MORE THAN 1500 FT FROM TERMINATION POINT, OR IF SIGHT DISTANCE TO THE CLOSURE IS LESS THAN 500 FT , A ROAD ENDS 500 FT (WB-16) SIGN SHALL BE ERECTED 500 FT IN ADVANCE OF THE TERMINATION OF THE ROAD. THIS WORK WILL BE PAID FOR AT THE CONTRACT UNIT PRICE PER EACH FOR "TERMINATION OF DEAD END ROADS" WHICH PRICE SHALL INCLUDE ALL LABOR, MATERIALS AND EQUIPMENT NECESSARY TO INSTALL THE SIGNS AND DELINEATORS.

USE 4X6 WOOD POSTS INSTALLED IN ACCORDANCE WITH SECTION 730 OF STANDARD SPECIFICATIONS FOR TRAFFIC CONTROL ITEMS. USE APPLICABLE PARTS OF STANDARD 720001 FOR SIGN MOUNTING.

ALL DIMENSIONS ARE IN INCHES UNLESS OTHERWISE NOTED.

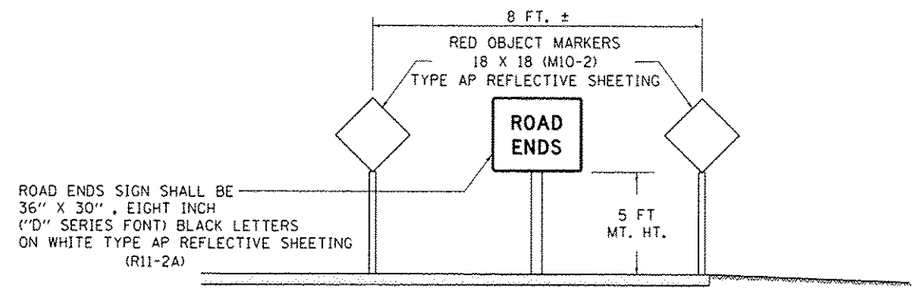

TERMINATION SIGNING

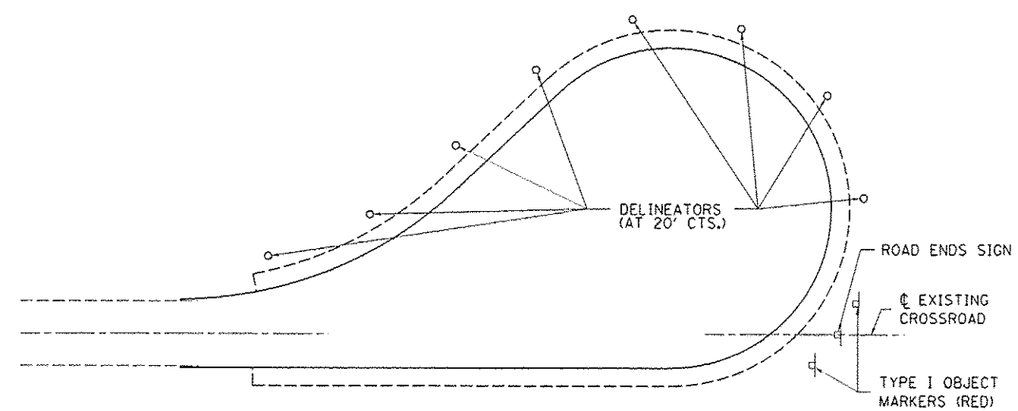

TRAFFIC CONTROL
TYPICAL CUL-DE-SAC

REVISED - 11-12-14	REGION 2 / DISTRICT 2 STANDARD	F.A.I RTE.	SECTION	COUNTY	TOTAL SHEETS	SHEET NO.
REVISED - 10-14-11		74	(81-1)R & 81-1)HVBR	ROCK ISLAND	1504	1224
REVISED -		CONTRACT NO. 64C08				
REVISED -	SCALE: SHEET NO. OF SHEETS STA. TO STA.	ILLINOIS FED. AID PROJECT				

LAYOUT	CBP	11/20/2014
DRAWN	CBP	11/20/2014
REVIEWED	AAP	10/21/2015

05/16/17

1/20/2017

PLOT DATE = 4/11/2017

TRAFFIC CONTROL FOR TRANSITION AREAS

CASE 1

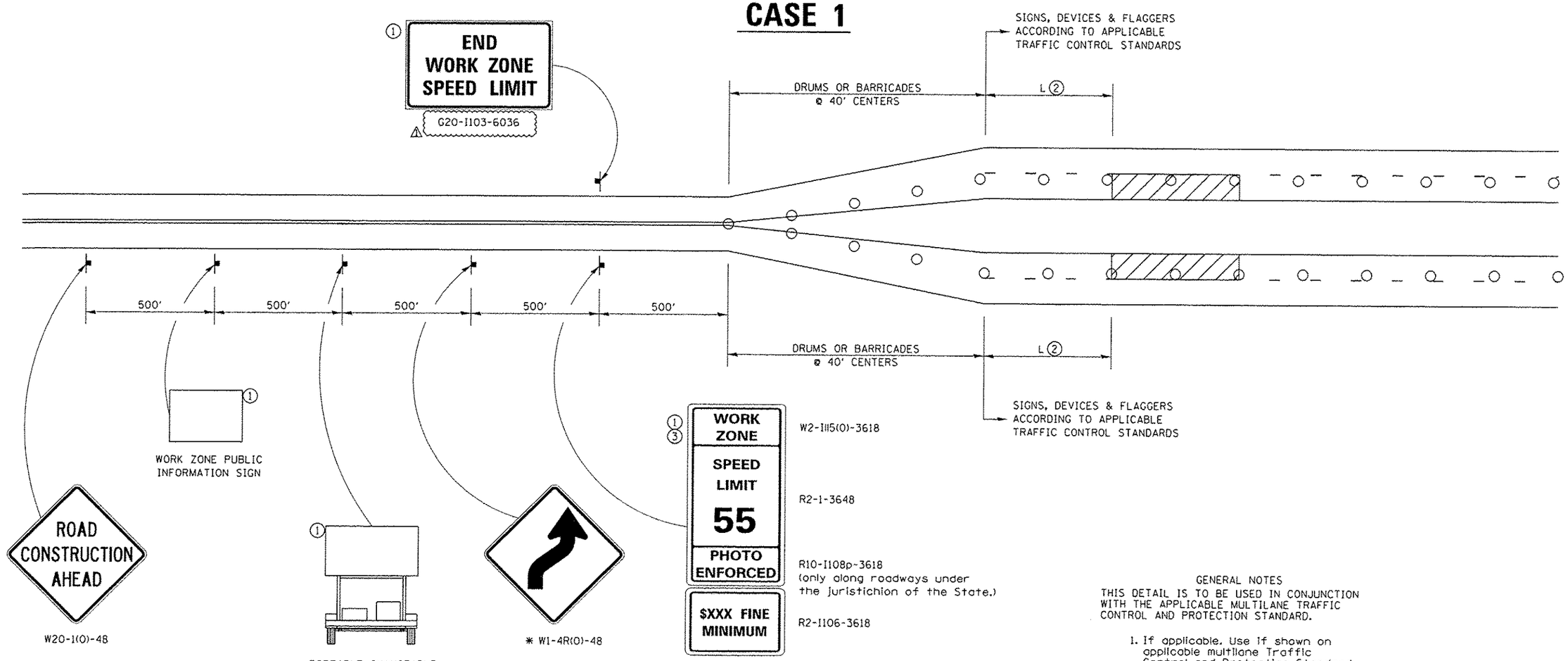

GENERAL NOTES

THIS DETAIL IS TO BE USED IN CONJUNCTION WITH THE APPLICABLE MULTILANE TRAFFIC CONTROL AND PROTECTION STANDARD.

1. If applicable. Use if shown on applicable multilane Traffic Control and Protection Standard being used.
2. If the work is within 2500 feet of the transition when the speed is > 40 mph, or 1500 feet for all other speeds, the detail shall be used.
3. WORK ZONE SPEED LIMIT 55 SIGN ASSEMBLY shall be replaced with WORK ZONE SPEED LIMIT 45 SIGN ASSEMBLY where the workers are within 500 feet of the transition.

THIS TRAFFIC CONTROL DETAIL SHALL BE INCLUDED IN THE COST OF SPECIFIED TRAFFIC CONTROL STANDARDS OR ITEMS.

DRUMS OR BARRICADES WITH LIGHTS

WORK AREA

NOTE: STANDARDS 701301 AND 701306 SHALL NOT BE USED WITHIN 500 FEET OF THE TRANSITION.

* DEPENDS ON GEOMETRICS OF THE TRANSITION. MAY SWITCH THE "STAY IN YOUR LANE" AND "WEAVE SIGNS"

LAYOUT	MTH	8/24/2015
DRAWN	MTH	8/24/2015
REVIEWED	AAP	2/3/2016

FILE NAME = D2CONAB-HPS-sht-details38.dgn	USER NAME = petke82954	DESIGNED -	REVISED - 4-20-17 ⚠	STATE OF ILLINOIS DEPARTMENT OF TRANSPORTATION
		DRAWN -	REVISED - 1-05-16	
	PLOT SCALE =	CHECKED -	REVISED - 8-27-13	
	PLOT DATE = 4/24/2017	DATE - 1/20/2017	REVISED - 1-16-13	

REGION 2 / DISTRICT 2 STANDARD

SCALE: | SHEET NO. OF SHEETS | STA. TO STA.

F.A.I RTE.	SECTION	COUNTY	TOTAL SHEETS	SHEET NO.
74	(81-1)R & 81-1HVBR	ROCK ISLAND	1504	1234
		CONTRACT NO. 64C08		
		ILLINOIS FED. AID PROJECT		

TRAFFIC CONTROL FOR TRANSITION AREAS

CASE 2

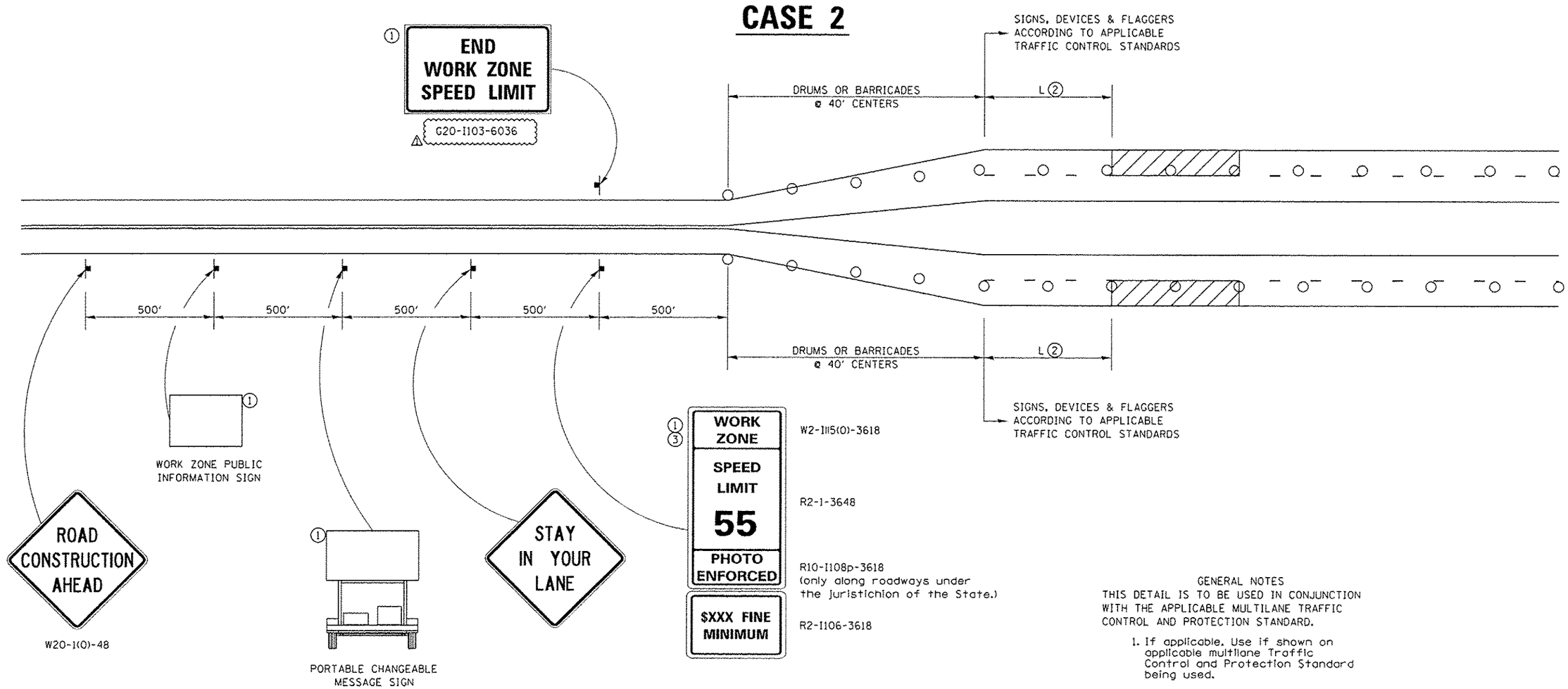

DRUMS OR BARRICADES WITH LIGHTS

WORK AREA

NOTE: STANDARDS 701301 AND 701306 SHALL NOT BE USED WITHIN 500 FEET OF THE TRANSITION.

GENERAL NOTES

THIS DETAIL IS TO BE USED IN CONJUNCTION WITH THE APPLICABLE MULTILANE TRAFFIC CONTROL AND PROTECTION STANDARD.

1. If applicable. Use if shown on applicable multilane Traffic Control and Protection Standard being used.
2. If the work is within 2500 feet of the transition when the speed is > 40 mph, or 1500 feet for all other speeds, the detail shall be used.
3. WORK ZONE SPEED LIMIT 55 SIGN ASSEMBLY shall be replaced with WORK ZONE SPEED LIMIT 45 SIGN ASSEMBLY where the workers are within 500 feet of the transition.

THIS TRAFFIC CONTROL DETAIL SHALL BE INCLUDED IN THE COST OF SPECIFIED TRAFFIC CONTROL STANDARDS OR ITEMS.

LAYOUT	MTN	8-24-2015
DRAWN	MTN	8-24-2015
REVIEWED	AJP	2-3-2016

FILE NAME = D2CONAB-HPS-sht-details38.dgn	USER NAME = peth-08954	DESIGNED -	REVISED - 4-20-17
		DRAWN -	REVISED - 1-05-16
	PLOT SCALE =	CHECKED -	REVISED - 8-27-13
	PLOT DATE = 4/24/2017	DATE - 1/20/2017	REVISED - 1-16-13

STATE OF ILLINOIS
DEPARTMENT OF TRANSPORTATION

REGION 2 / DISTRICT 2 STANDARD

SCALE: | SHEET NO. OF SHEETS | STA. TO STA.

F.A.I RTE.	SECTION	COUNTY	TOTAL SHEETS	SHEET NO.
74	(81-1)R & 81-1HVBR	ROCK ISLAND	1504	1235

CONTRACT NO. 64C08

ILLINOIS FED. AID PROJECT

TRAFFIC CONTROL FOR TRANSITION AREAS

CASE 3

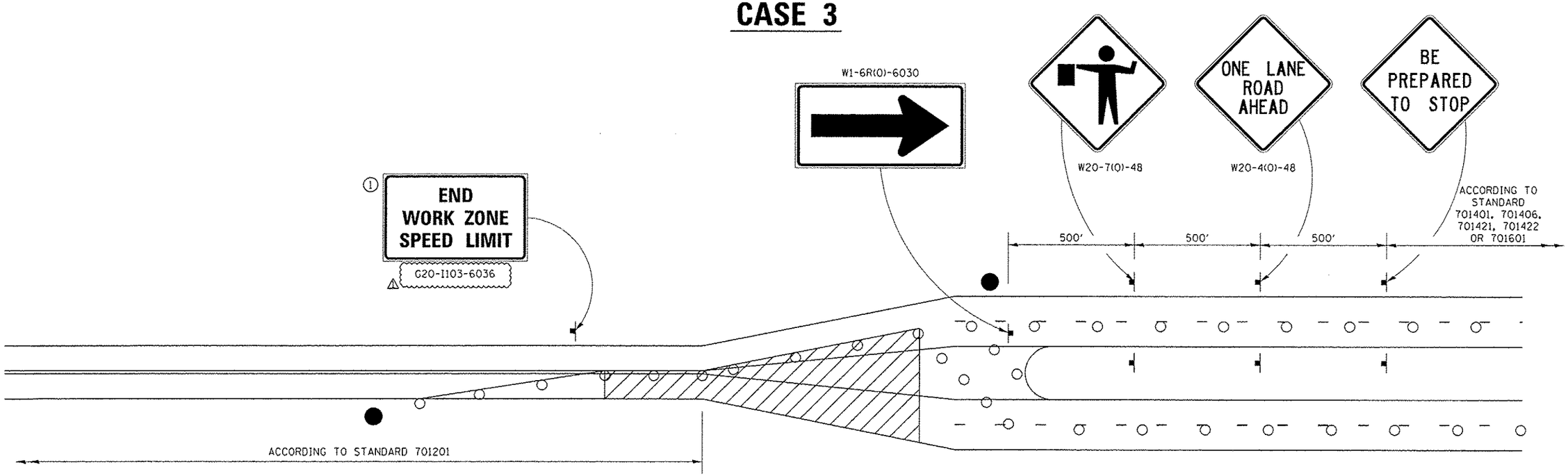

GENERAL NOTES

THIS DETAIL IS TO BE USED IN CONJUNCTION WITH THE APPLICABLE MULTILANE TRAFFIC CONTROL AND PROTECTION STANDARD.

1. If applicable. Use if shown on applicable multilane Traffic Control and Protection Standard being used.
2. If the work is within 2500 feet of the transition when the speed is > 40 mph, or 1500 feet for all other speeds, the detail shall be used.
3. WORK ZONE SPEED LIMIT 55 SIGN ASSEMBLY shall be replaced with WORK ZONE SPEED LIMIT 45 SIGN ASSEMBLY where the workers are within 500 feet of the transition.

THIS TRAFFIC CONTROL DETAIL SHALL BE INCLUDED IN THE COST OF SPECIFIED TRAFFIC CONTROL STANDARDS OR ITEMS.

● FLAGGER WITH TRAFFIC CONTROL SIGN

○ DRUMS OR BARRICADES WITH LIGHTS

WORK AREA

NOTE: STANDARDS 701301 AND 701306 SHALL NOT BE USED WITHIN 500 FEET OF THE TRANSITION.

LAYOUT	MTH	8/24/2015
DRAWN	MTH	8/24/2015
RECEIVED	AAP	2/3/2016

FILE NAME = D2CONAB-HPS-sht-details38.dgn	USER NAME = peteo00954	DESIGNED -	REVISED - 4-20-17 ⚠	STATE OF ILLINOIS DEPARTMENT OF TRANSPORTATION
		DRAWN -	REVISED - 1-05-16	
	PLOT SCALE =	CHECKED -	REVISED - 8-27-13	
	PLOT DATE = 4/24/2017	DATE - 1/20/2017	REVISED - 3-05-12	

REGION 2 / DISTRICT 2 STANDARD

SCALE: | SHEET NO. OF SHEETS | STA. TO STA.

F.A.I. RTE.	SECTION	COUNTY	TOTAL SHEETS	SHEET NO.
74	(B1-1)R & B1-1HVBR	ROCK ISLAND	1504	1236
		CONTRACT NO. 64C08		
		ILLINOIS FED. AID PROJECT		

TRAFFIC CONTROL FOR TRANSITION AREAS

CASE 4

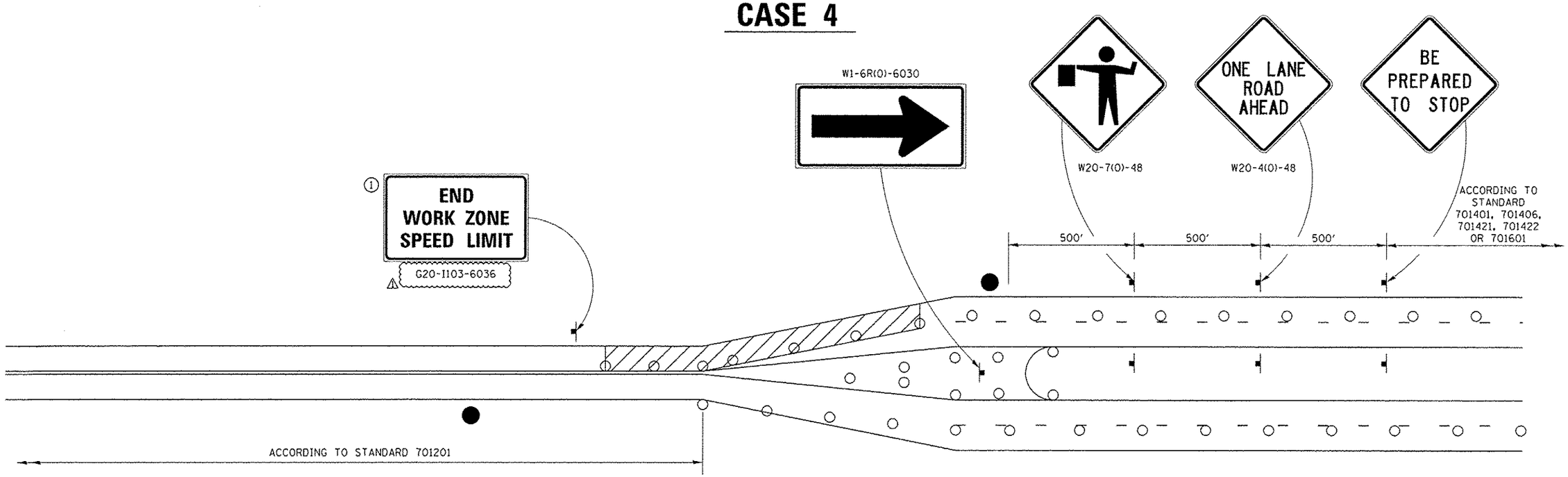

FLAGGER WITH TRAFFIC CONTROL SIGN

DRUMS OR BARRICADES WITH LIGHTS

WORK AREA

NOTE: STANDARDS 701301 AND 701306 SHALL NOT BE USED WITHIN 500 FEET OF THE TRANSITION.

GENERAL NOTES

THIS DETAIL IS TO BE USED IN CONJUNCTION WITH THE APPLICABLE MULTILANE TRAFFIC CONTROL AND PROTECTION STANDARD.

1. If applicable. Use if shown on applicable multilane Traffic Control and Protection Standard being used.
2. If the work is within 2500 feet of the transition when the speed is > 40 mph, or 1500 feet for all other speeds, the detail shall be used.
3. WORK ZONE SPEED LIMIT 55 SIGN ASSEMBLY shall be replaced with WORK ZONE SPEED LIMIT 45 SIGN ASSEMBLY where the workers are within 500 feet of the transition.

THIS TRAFFIC CONTROL DETAIL SHALL BE INCLUDED IN THE COST OF SPECIFIED TRAFFIC CONTROL STANDARDS OR ITEMS.

LAYOUT	MTH	8/24/2015
DRAWN	MTH	8/24/2015
REVIEWED	AKP	2/3/2016

FILE NAME = 02CONAB-HPS-sht-details38.dgn	USER NAME = peike28954	DESIGNED -	REVISED - 4-20-17	STATE OF ILLINOIS DEPARTMENT OF TRANSPORTATION
		DRAWN -	REVISED - 1-05-16	
	PLOT SCALE =	CHECKED -	REVISED - 8-27-13	
	PLOT DATE = 5/26/2017	DATE - 1/20/2017	REVISED - 3-05-12	

REGION 2 / DISTRICT 2 STANDARD

SCALE: | SHEET NO. OF SHEETS | STA. TO STA.

F.A.I RTE.	SECTION	COUNTY	TOTAL SHEETS	SHEET NO.
74	(B1-1)R & B1-1)HVBR	ROCK ISLAND	1504	1237

CONTRACT NO. 64C08

ILLINOIS FED. AID PROJECT

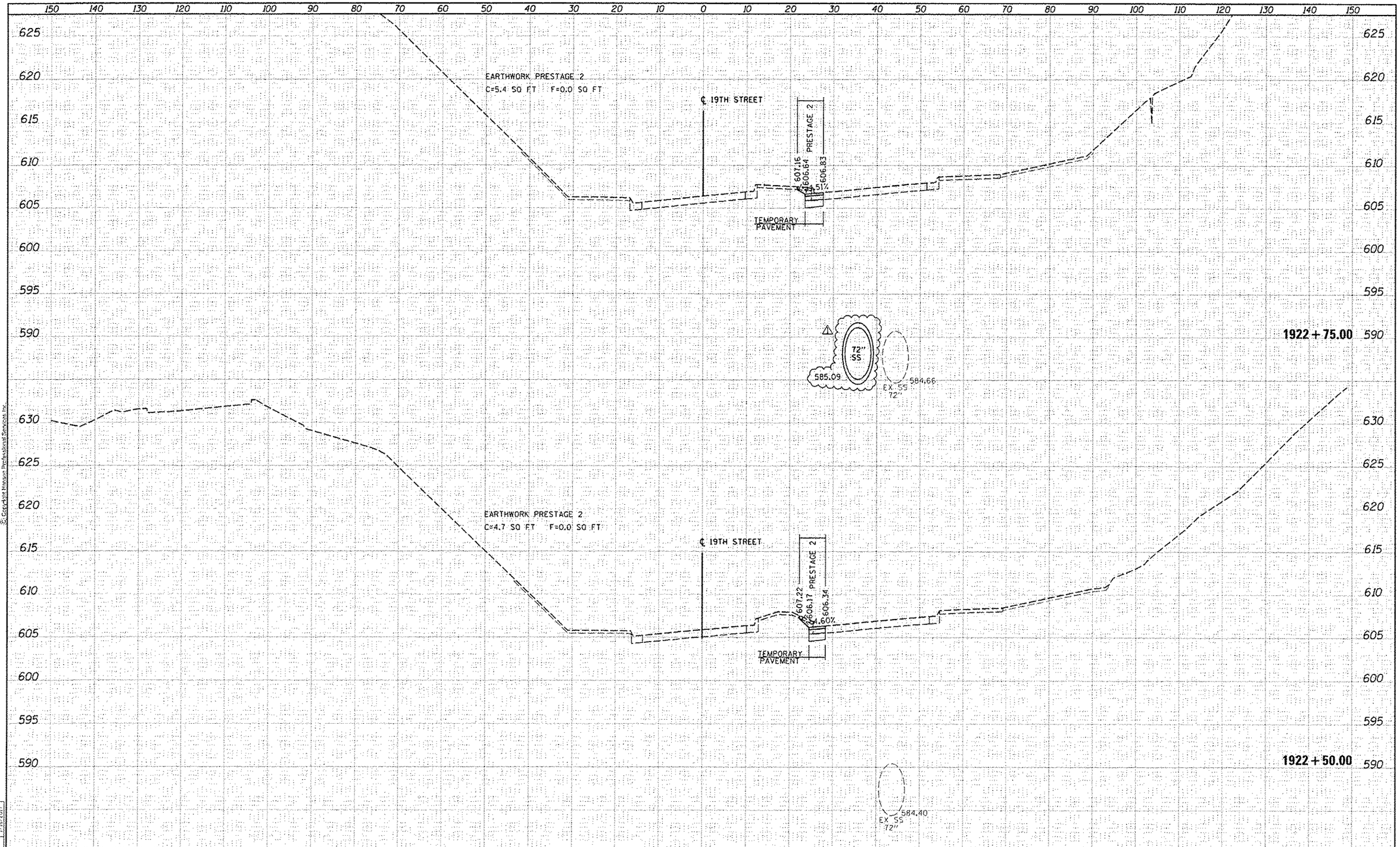

CS19TH-34

FILE NAME = 02CONAB-HPS-sht-washs07L.dgn	USER NAME = hahn01663	DESIGNED - RLT	REVISED - 05/16/17
		DRAWN - RLT	REVISED -
	PLOT SCALE =	CHECKED - MTH	REVISED -
	PLOT DATE = 5/24/2017	DATE - 1/20/2017	REVISED -

STATE OF ILLINOIS
DEPARTMENT OF TRANSPORTATION

CROSS SECTIONS
19TH STREET

SCALE: | SHEET NO. 34 OF 52 SHEETS | STA. 1922+50.00 TO STA. 1922+75.00

F.A.I RTE.	SECTION	COUNTY	TOTAL SHEETS	SHEET NO.
74	(81-1)R & 81-1)VBR	ROCK ISLAND	1504	1448

CONTRACT NO. 64C08

ILLINOIS FED. AID PROJECT

LAYOUT	RLT	12/15/2016
DRAWN	RLT	12/15/2016
REVIEWED	MTH	1/16/2017

FINAL SURVEY — SURVEYED / PLOTTED / TEMPLATE / AREAS / AREAS CHECKED — NOTE BOOK — NO. — BY — DATE

ORIGINAL SURVEY — SURVEYED / PLOTTED / TEMPLATE / AREAS / AREAS CHECKED — NOTE BOOK — NO. — BY — DATE

HANSON

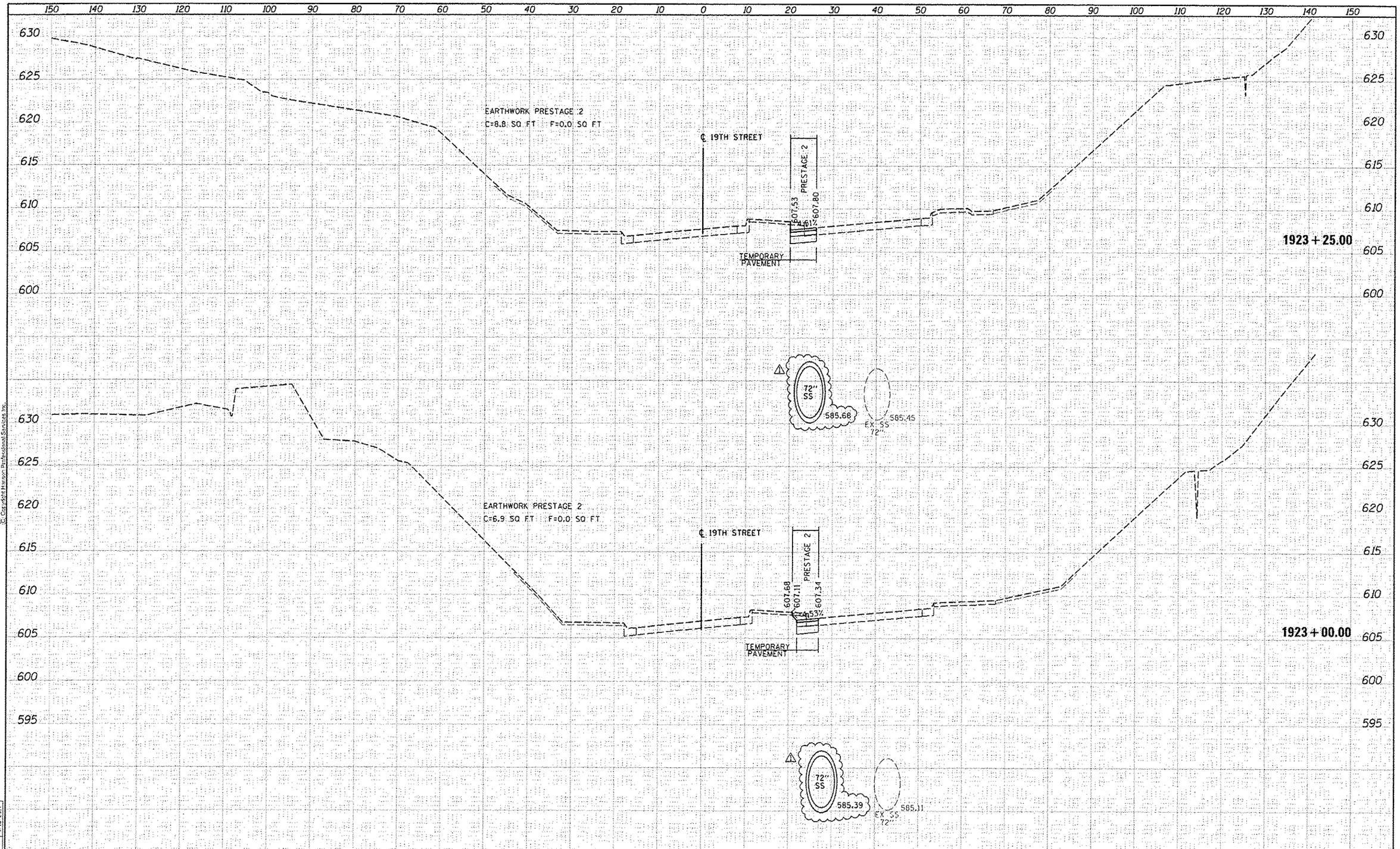

CS19TH-35

FILE NAME = D2CONAB-HPS-sht-wash07L.dgn	USER NAME = kahn81663	DESIGNED - RLT	REVISED - 05/16/17
		DRAWN - RLT	REVISED -
	PLOT SCALE =	CHECKED - MTH	REVISED -
	PLOT DATE = 5/24/2017	DATE - 1/20/2017	REVISED -

STATE OF ILLINOIS
DEPARTMENT OF TRANSPORTATION

CROSS SECTIONS
19TH STREET

SCALE: | SHEET NO. 35 OF 52 SHEETS | STA. 1923+00.00 TO STA. 1923+25.00

F.A.I RTE.	SECTION	COUNTY	TOTAL SHEETS	SHEET NO.
74	(81-1)R & 81-1)HVBR	ROCK ISLAND	1504	1449

CONTRACT NO. 64C08

ILLINOIS FED. AID PROJECT

LAYOUT	RLT	12-15-2016
DRAWN	RLT	12-15-2016
REVIEWED	MTH	1-16-2017

HANSON

FINAL SURVEY	SURVEYED	BY	DATE
	PLOTTED		
	TEMPLATE		
NOTE BOOK	AREAS		
NO.	AREAS CHECKED		

ORIGINAL SURVEY	SURVEYED	BY	DATE
	PLOTTED		
	TEMPLATE		
NOTE BOOK	AREAS		
NO.	AREAS CHECKED		

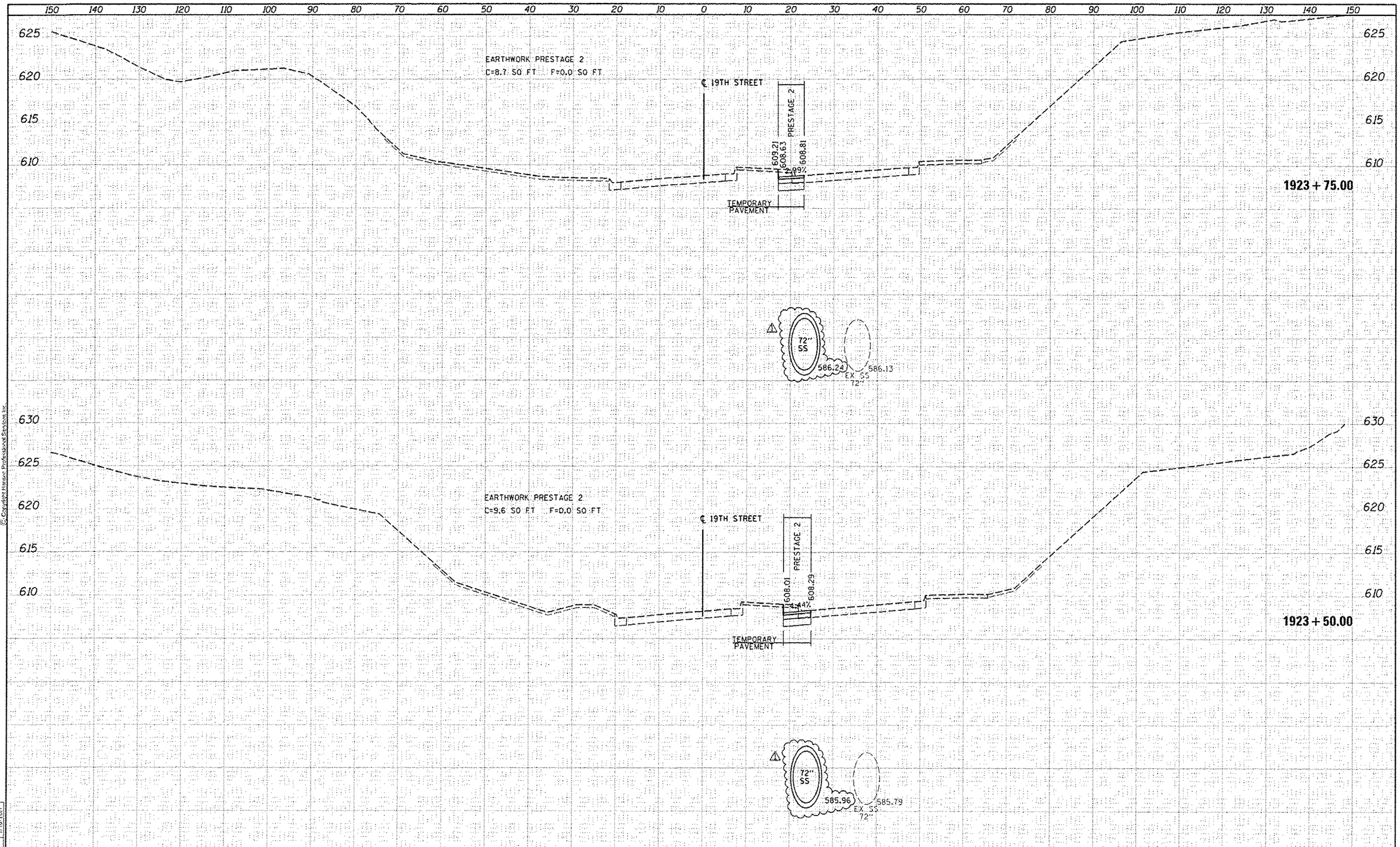

FILE NAME = D2CONAB-HPS-sht-ssshc07L.dgn	USER NAME = hehm01663	DESIGNED - RLT	REVISED - 05/16/17
		DRAWN - RLT	REVISED -
	PLOT SCALE =	CHECKED - MTH	REVISED -
	PLOT DATE = 5/24/2017	DATE - 1/20/2017	REVISED -

STATE OF ILLINOIS
DEPARTMENT OF TRANSPORTATION

CROSS SECTIONS
19TH STREET

SCALE: | SHEET NO. 36 OF 52 SHEETS | STA. 1923+50.00 TO STA. 1924+00.00

F.A.I RTE.	SECTION	COUNTY	TOTAL SHEETS	SHEET NO.
74	(81-1)R & 81-1)HVBR	ROCK ISLAND	1504	1450

CONTRACT NO. 64C08

ILLINOIS | FED. AID PROJECT

HANSON

FINAL SURVEY	SURVEYED	PLOTTED	TEMPLATE	AREAS	AREAS CHECKED
NOTE BOOK					
NO.					

ORIGINAL SURVEY	SURVEYED	PLOTTED	TEMPLATE	AREAS	AREAS CHECKED
NOTE BOOK					
NO.					

LAYOUT	RLT	12/15/2016
DRAWN	RLT	12/15/2016
REVIEWED	MTH	1/16/2017

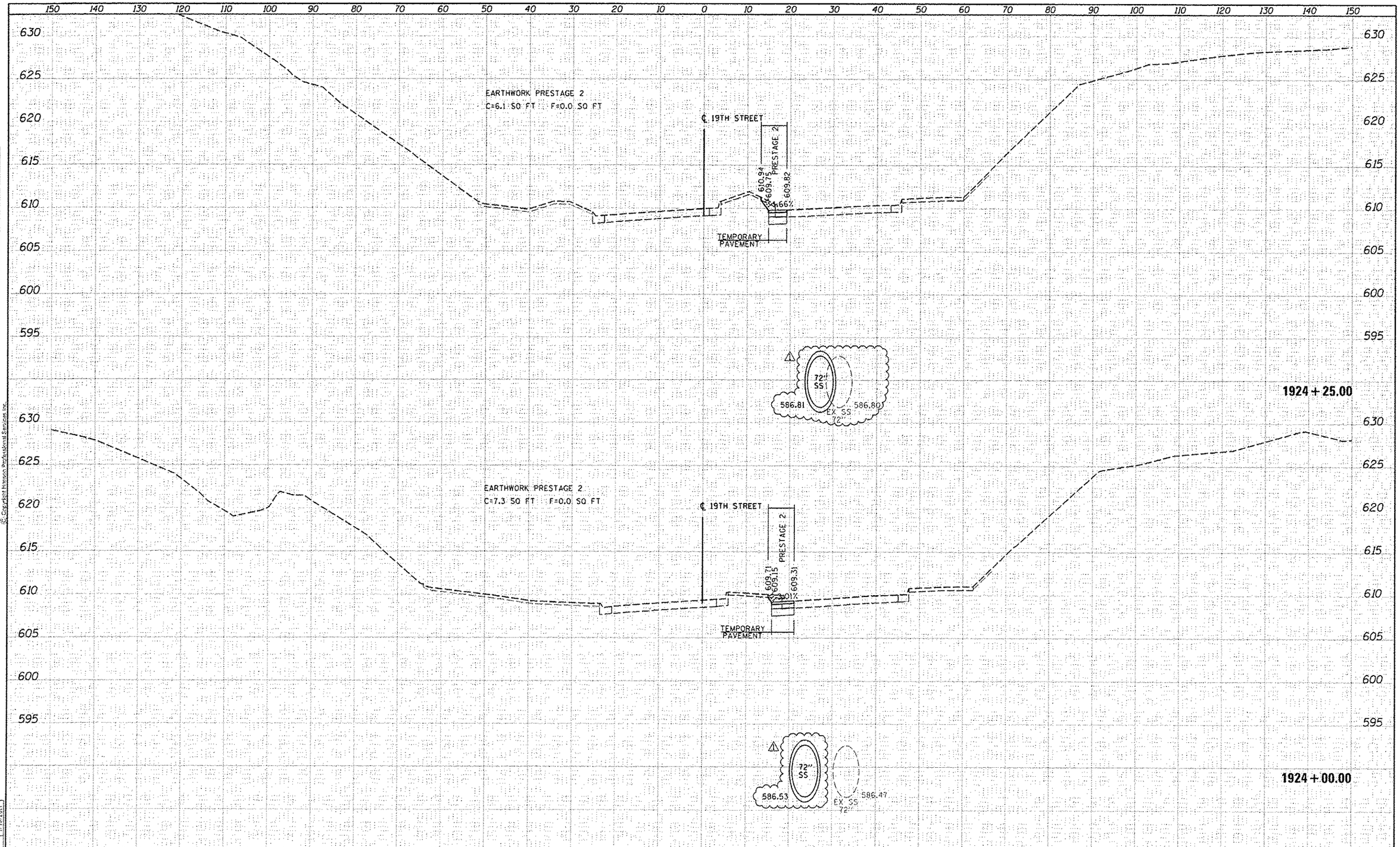

CS19TH-37

FILE NAME = D2CONAB-HPS-sht-xsshs07L.dgn	USER NAME = hahn01663	DESIGNED - RLT	REVISED - 05/16/17	STATE OF ILLINOIS DEPARTMENT OF TRANSPORTATION
		DRAWN - RLT	REVISED -	
	PLOT SCALE =	CHECKED - MTH	REVISED -	
	PLOT DATE = 5/24/2017	DATE - 1/20/2017	REVISED -	

CROSS SECTIONS
19TH STREET

SCALE: | SHEET NO. 37 OF 52 SHEETS | STA. 1924+00.00 TO STA. 1924+25.00

F.A.I RTE.	SECTION	COUNTY	TOTAL SHEETS	SHEET NO.
74	(81-1)R & 81-1HVBR	ROCK ISLAND	1504	1451

CONTRACT NO. 64C08

ILLINOIS FED. AID PROJECT

LAYOUT RLT 12/15/2016
DRAWN RLT 12/15/2016
REVIEWED MTH 1/16/2017

HANSON

FINAL SURVEY NOTE BOOK NO. — SURVEYED / PLOTTED / TEMPLATE / AREAS / AREAS CHECKED — BY — DATE

ORIGINAL SURVEY NOTE BOOK NO. — SURVEYED / PLOTTED / TEMPLATE / AREAS / AREAS CHECKED — BY — DATE

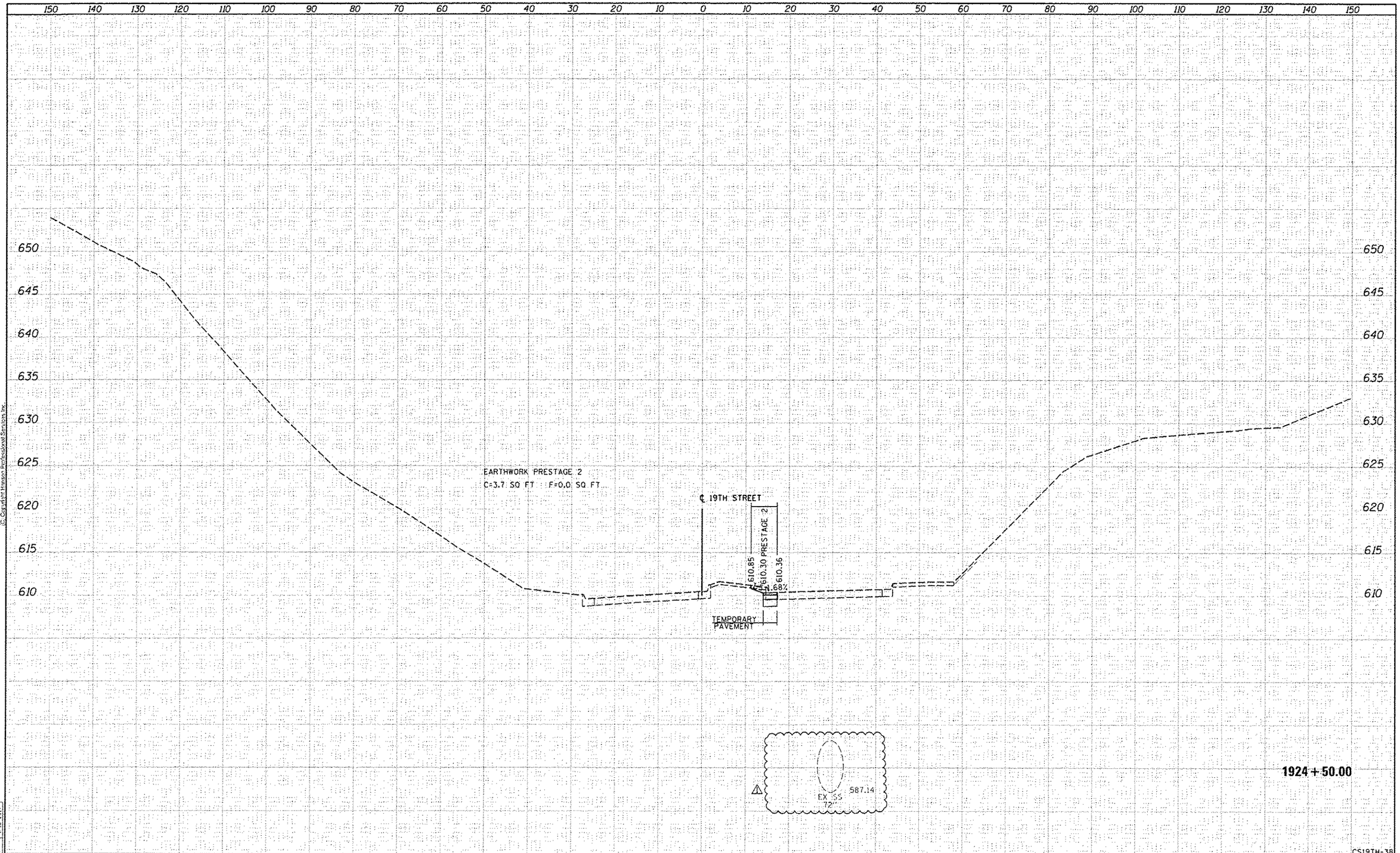

CS19TH-38

FILE NAME =	USER NAME = hehn01663	DESIGNED - RLT	REVISED - 05/16/17
D2CONAB-HPS-sht-xsht07L.dgn		DRAWN - RLT	REVISED -
	PLOT SCALE =	CHECKED - MTH	REVISED -
	PLOT DATE = 5/24/2017	DATE - 1/20/2017	REVISED -

STATE OF ILLINOIS
DEPARTMENT OF TRANSPORTATION

CROSS SECTIONS
19TH STREET

SCALE: | SHEET NO. 38 OF 52 SHEETS | STA. 1924+50.00 TO STA. 1924+50.00

F.A.I RTE.	SECTION	COUNTY	TOTAL SHEETS	SHEET NO.
74	(81-1)R & 81-1HVBR	ROCK ISLAND	1504	1452

CONTRACT NO. 64C08

ILLINOIS FED. AID PROJECT

HANSON

FINAL SURVEY	SURVEYED	BY	DATE
NOTE BOOK	PLOTTED		
NO.	TEMPLATE		
	AREAS		
	AREAS CHECKED		

ORIGINAL SURVEY	SURVEYED	BY	DATE
NOTE BOOK	PLOTTED		
NO.	TEMPLATE		
	AREAS		
	AREAS CHECKED		

LAYOUT	RLT	12/15/2016
DRAWN	RLT	12/15/2016
REVIEWED	MTH	1/16/2017

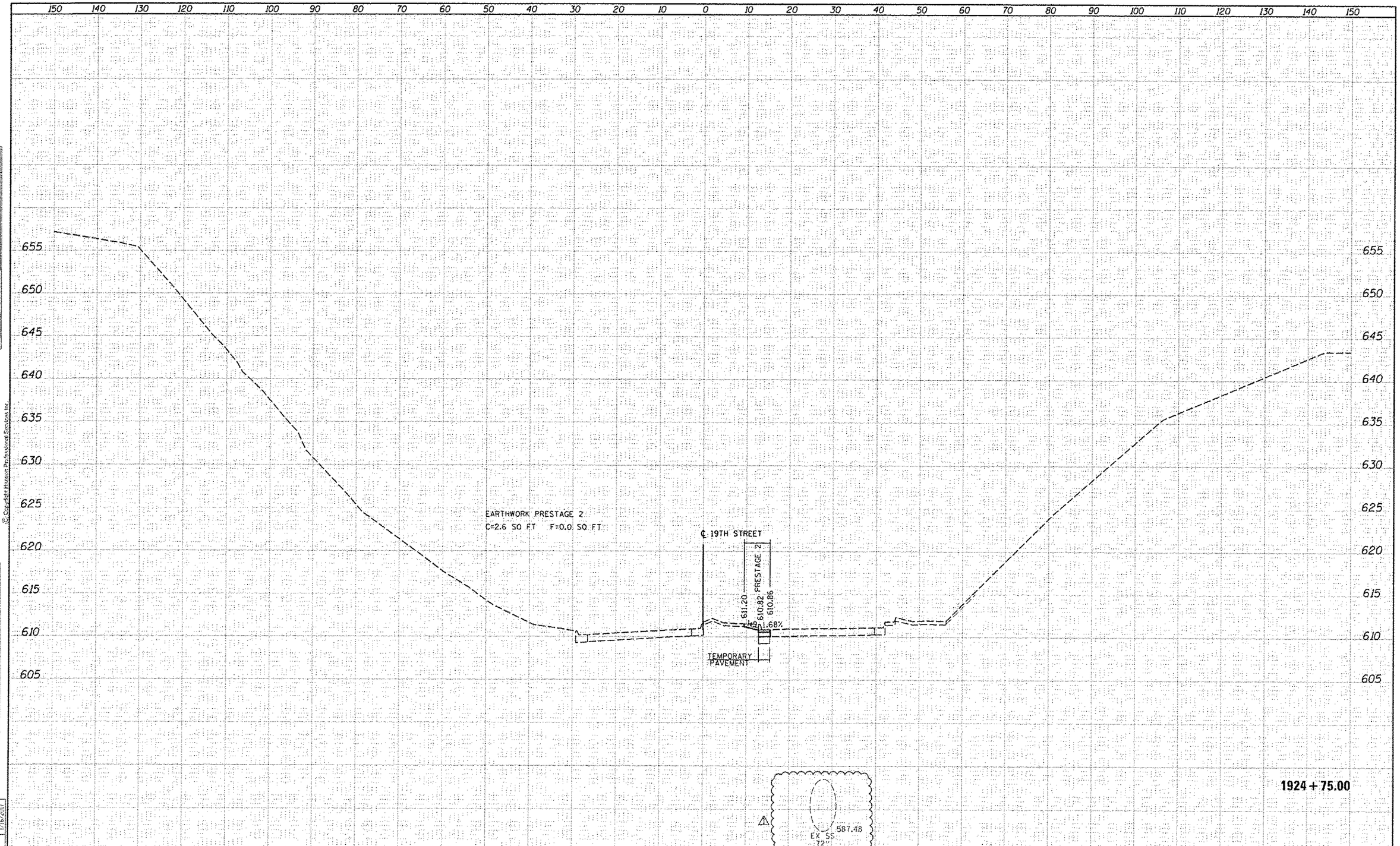

CS19TH-39

FILE NAME = 02CONAB-HPS-sht-xsh107L.dgn	USER NAME = hahn@1663	DESIGNED - RLT	REVISED - 05/16/17
		DRAWN - RLT	REVISED -
	PLOT SCALE =	CHECKED - MTH	REVISED -
	PLOT DATE = 5/24/2017	DATE - 1/20/2017	REVISED -

STATE OF ILLINOIS
DEPARTMENT OF TRANSPORTATION

CROSS SECTIONS
19TH STREET

SCALE: | SHEET NO. 39 OF 52 SHEETS | STA. 1924+75.00 TO STA. 1924+75.00

F.A.I. RTE.	SECTION	COUNTY	TOTAL SHEETS	SHEET NO.
74	(B1-1)R & B1-1)HVBR	ROCK ISLAND	1504	1453
		CONTRACT NO. 64C08		
		ILLINOIS FED. AID PROJECT		

FINAL SURVEY — SURVEYED / PLOTTED / TEMPLATE / AREAS / AREAS CHECKED — NOTE BOOK — NO. — BY — DATE

ORIGINAL SURVEY — SURVEYED / PLOTTED / TEMPLATE / AREAS / AREAS CHECKED — NOTE BOOK — NO. — BY — DATE

LAYOUT RLT 12/15/2016
DRAWN RLT 12/15/2016
REVIEWED MTH 1/16/2017

HANSON

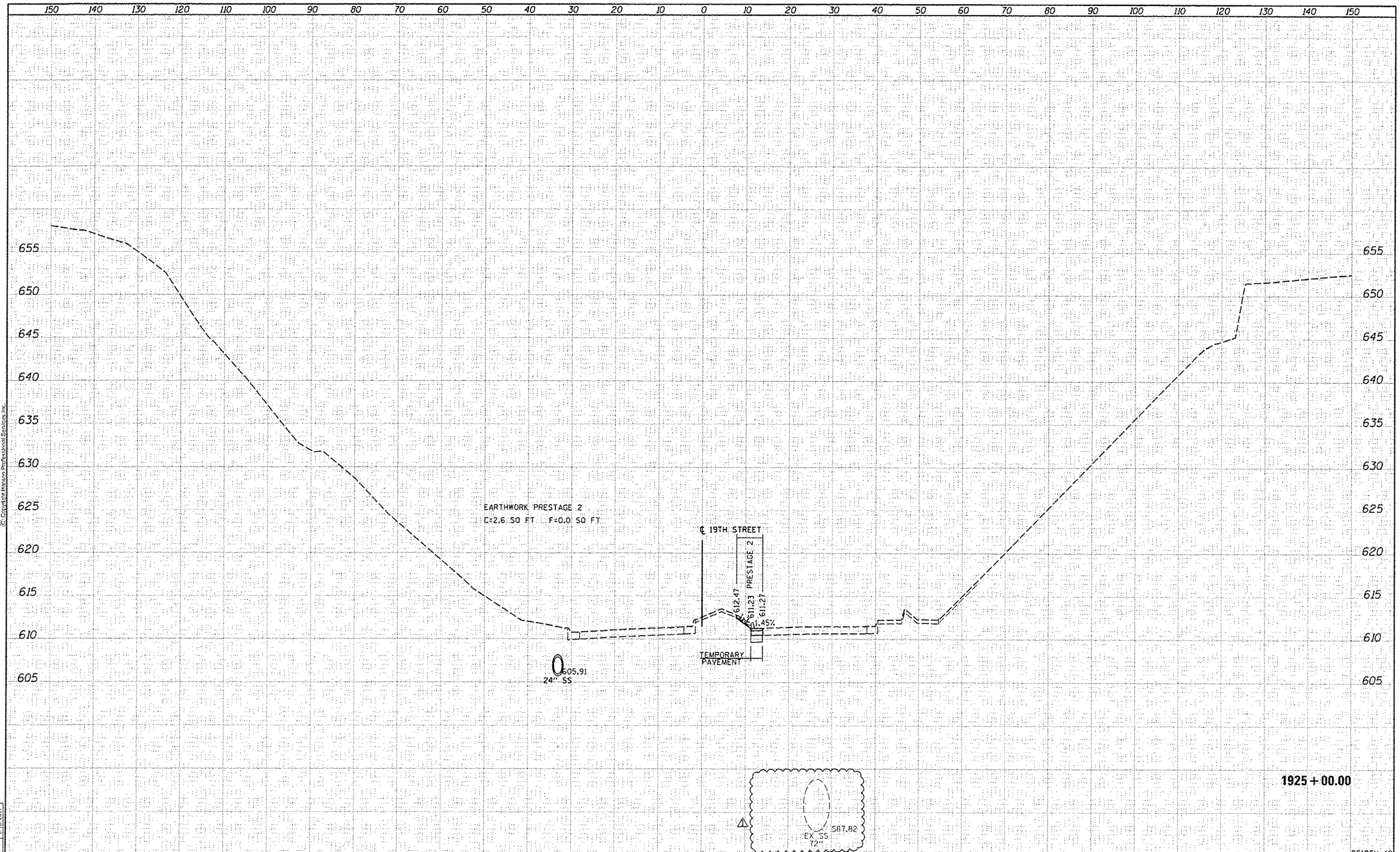

HANSON

© Copyright Hanson Professional Services Inc.

FINAL SURVEY		BY	DATE
NOTE BOOK	SURVEYED		
	PLOTTED		
	TEMPLATE		
	AREAS		
	AREAS CHECKED		

ORIGINAL SURVEY		BY	DATE
NOTE BOOK	SURVEYED		
	PLOTTED		
	TEMPLATE		
	AREAS		
	AREAS CHECKED		

LAYOUT	RLT	12/15/2016
DRAWN	RLT	12/15/2016
REVIEWED	MTH	1/16/2017

FILE NAME = D2CONAB-HPS-sht-xsaht07L.dgn	USER NAME = hehv01663	DESIGNED - RLT	REVISED - 05/16/17
		DRAWN - RLT	REVISED -
	PLOT SCALE =	CHECKED - MTH	REVISED -
	PLOT DATE = 5/24/2017	DATE - 1/20/2017	REVISED -

STATE OF ILLINOIS
DEPARTMENT OF TRANSPORTATION

CROSS SECTIONS
19TH STREET

SCALE: | SHEET NO. 40 OF 52 SHEETS | STA. 1925+00.00 TO STA. 1925+00.00

F.A.I RTE.	SECTION	COUNTY	TOTAL SHEETS	SHEET NO.
74	(81-1)R & 81-1)VBR	ROCK ISLAND	1504	1454

CONTRACT NO. 64C08

ILLINOIS FED. AID PROJECT

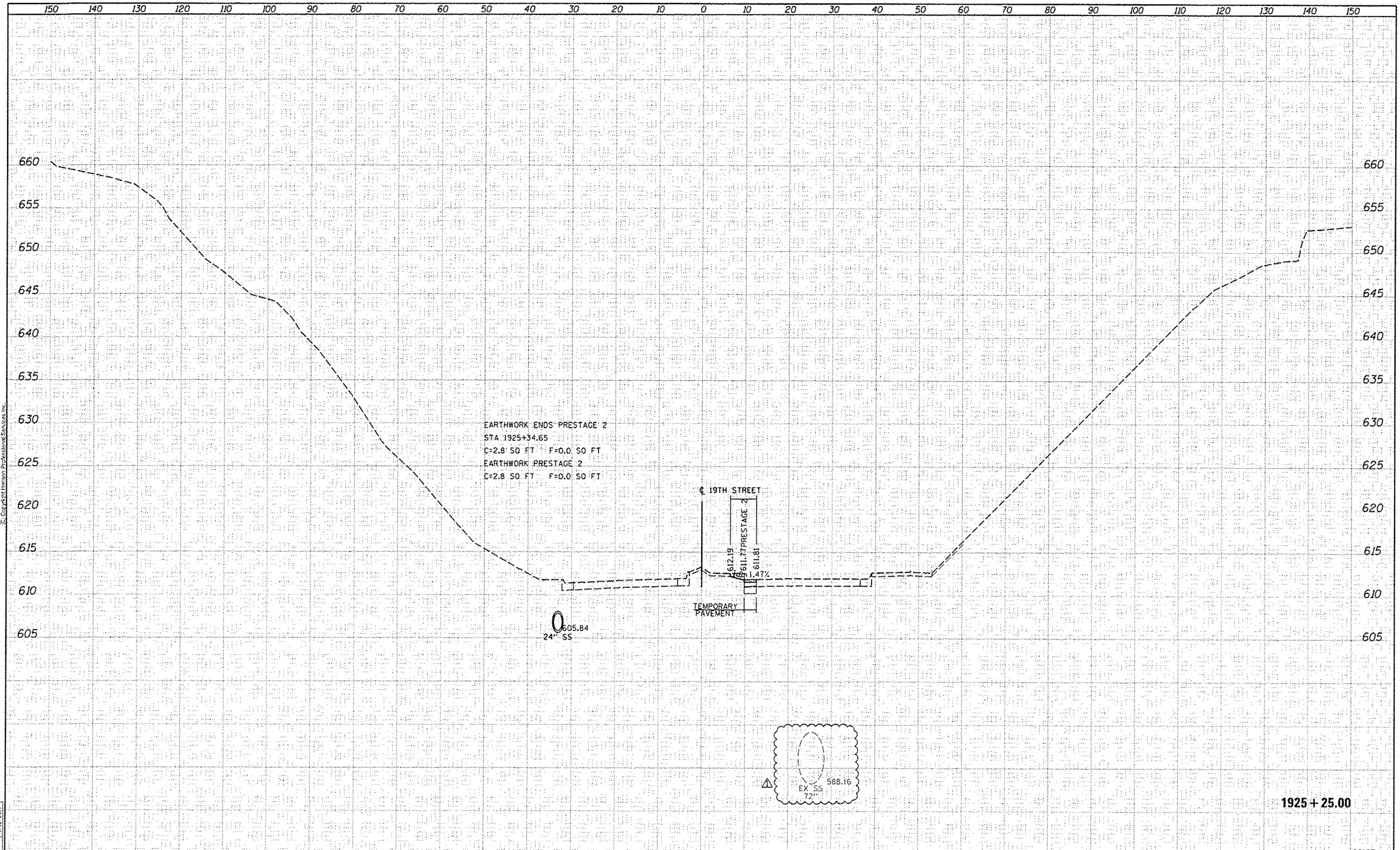

CS19TH-41

FILE NAME = D2CONAB-HPS-sht-xsaht07L.dgn	USER NAME = hehn01663	DESIGNED - RLT	REVISED - 05/16/17	STATE OF ILLINOIS DEPARTMENT OF TRANSPORTATION	CROSS SECTIONS 19TH STREET
		DRAWN - RLT	REVISED -		
	PLOT SCALE =	CHECKED - MTH	REVISED -		
	PLOT DATE = 5/24/2017	DATE - 1/20/2017	REVISED -		SCALE: SHEET NO. 41 OF 52 SHEETS STA. 1925+25.00 TO STA. 1925+25.00

F.A.I RTE.	SECTION	COUNTY	TOTAL SHEETS	SHEET NO.
74	(81-1)R & 81-1)HVBR	ROCK ISLAND	1504	1455

CONTRACT NO. 64C08

ILLINOIS FED. AID PROJECT

LAYOUT	RLT	12/15/2016
DRAWN	RLT	12/15/2016
REVIEWED	MTH	1/16/2017

ORIGINAL SURVEY		SURVEYED	PLOTTED	TEMPLATE	AREAS	AREAS CHECKED
	NOTE BOOK					
NO.						

FINAL SURVEY		SURVEYED	PLOTTED	TEMPLATE	AREAS	AREAS CHECKED
	NOTE BOOK					
NO.						

HANSON

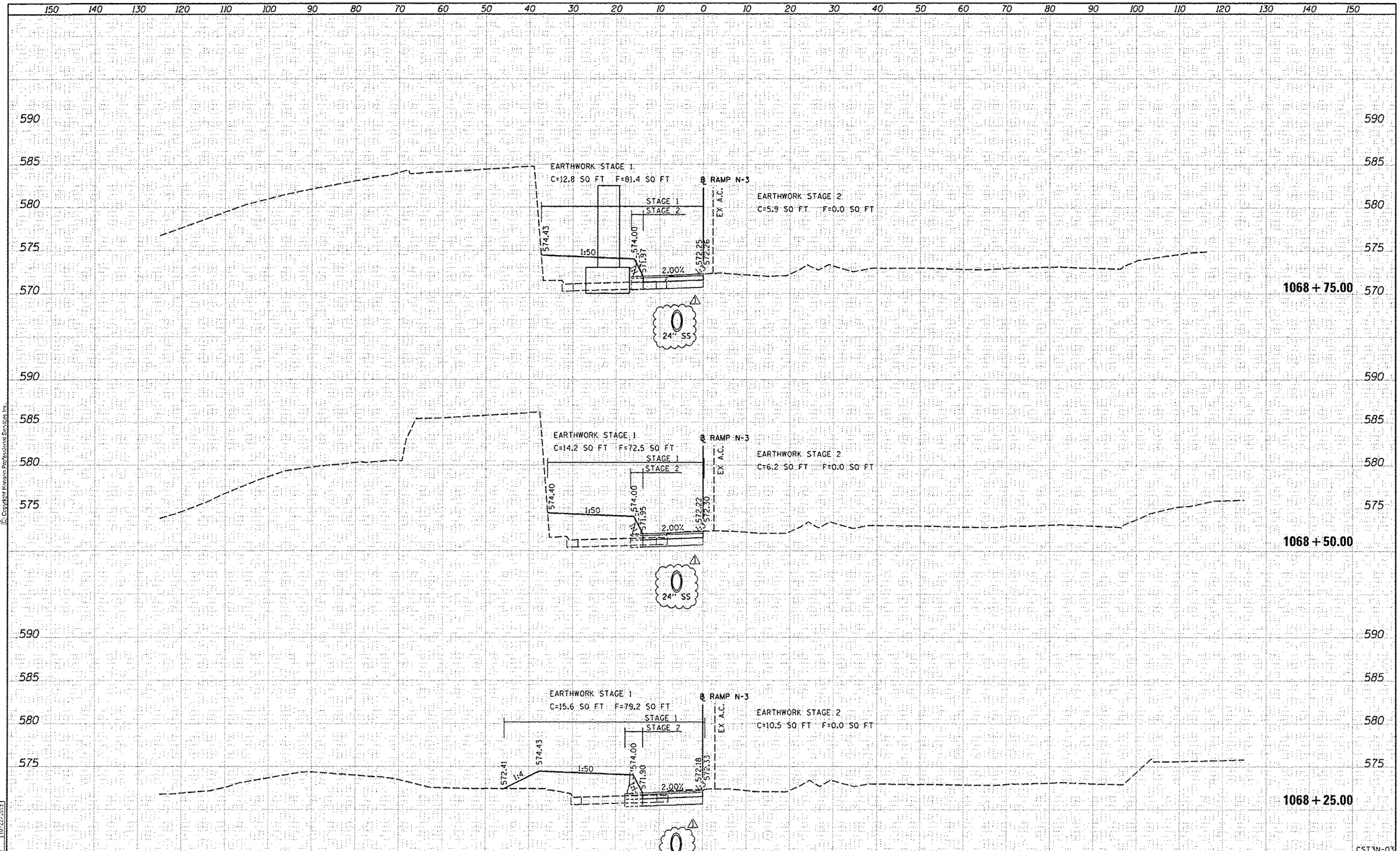

FILE NAME = D2CONAB-HPS-sht-xssht39M.dgn	USER NAME = willi01457	DESIGNED - RLT	REVISED - 05/16/17	STATE OF ILLINOIS DEPARTMENT OF TRANSPORTATION	CROSS SECTIONS TEMPORARY RAMP N-3 TEMPORARY RUNAROUND	F.A.I RTE.	SECTION	COUNTY	TOTAL SHEETS	SHEET NO.
		DRAWN - RLT	REVISED -			74	(81-1)R & 81-1)HVBR	ROCK ISLAND	1504	1497
	PLOT SCALE =	CHECKED - MTH	REVISED -					CONTRACT NO. 64C08		
	PLOT DATE = 4/10/2017	DATE - 1/20/2017	REVISED -		SCALE: SHEET NO. 3 OF 7 SHEETS STA. 1068+25.00 TO STA. 1068+75.00			ILLINOIS FED. AID PROJECT		

HANSON

© Copyright Hanson Professional Services Inc.

FINAL SURVEY	SURVEYED	PLOTTED	TEMPLATE	AREAS	AREAS CHECKED	NOTE BOOK	NO.	BY	DATE

ORIGINAL SURVEY	SURVEYED	PLOTTED	TEMPLATE	AREAS	AREAS CHECKED	NOTE BOOK	NO.	BY	DATE

LAYOUT	CBP	11/20/2014
DRAWN	CBP	11/20/2014
REVIEWED	MTH	10/22/2015

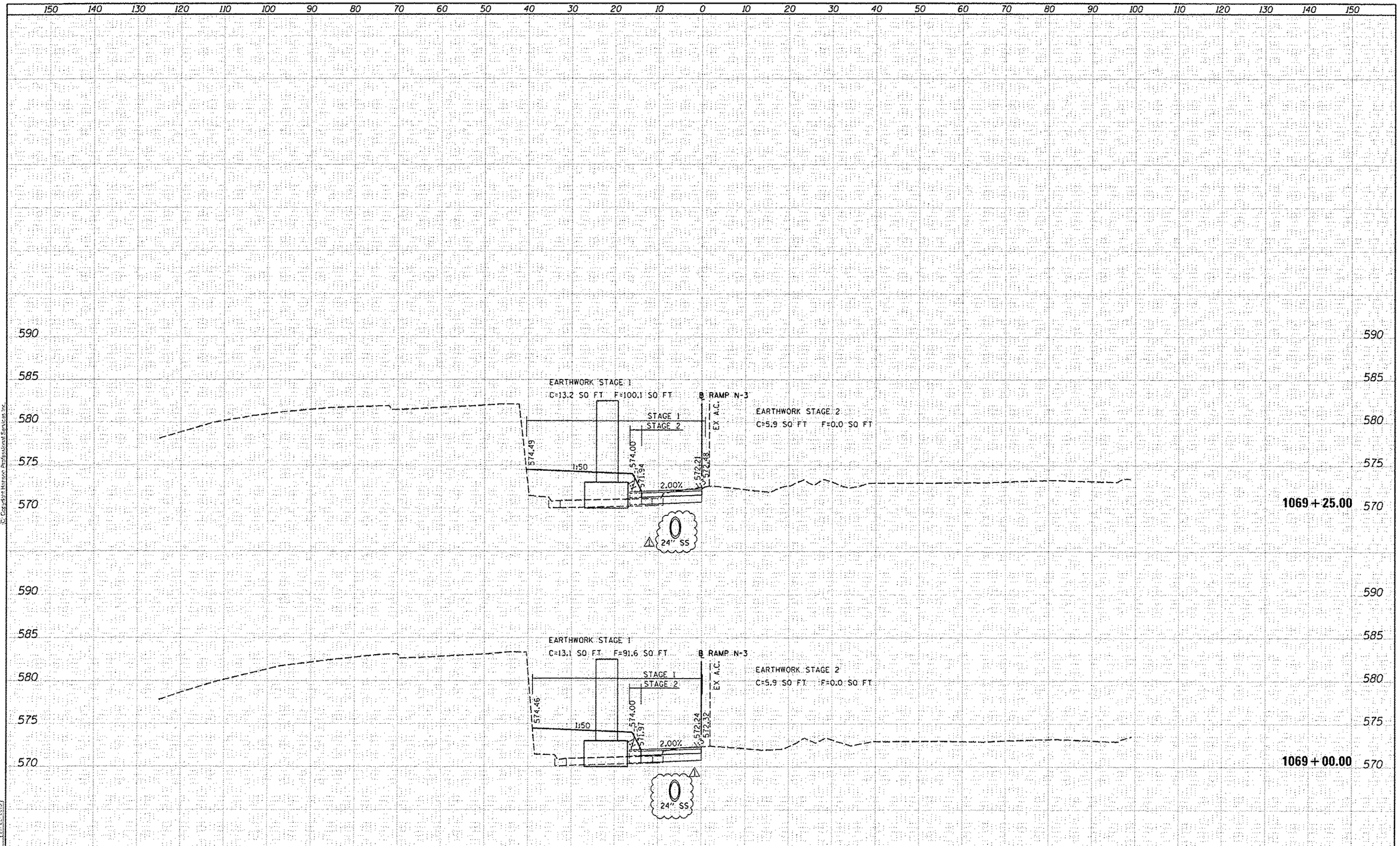

CST3N-04

FILE NAME =	USER NAME =	DESIGNED - RLT	REVISED - 05/16/17
D2CONAB-HPS-sht-wsshs39M.dgn		DRAWN - RLT	REVISED -
	PLOT SCALE =	CHECKED - MTH	REVISED -
	PLOT DATE = 4/18/2017	DATE - 1/20/2017	REVISED -

STATE OF ILLINOIS
DEPARTMENT OF TRANSPORTATION

CROSS SECTIONS
TEMPORARY RAMP N-3
TEMPORARY RUNAROUND

SCALE: | SHEET NO. 4 OF 7 SHEETS | STA. 1069+00.00 TO STA. 1069+25.00

F.A.I RTE.	SECTION	COUNTY	TOTAL SHEETS	SHEET NO.
74	(81-1)R & 81-1HVBR	ROCK ISLAND	1504	1498

CONTRACT NO. 64C08

ILLINOIS FED. AID PROJECT

LAYOUT	CBP	11/20/2014
DRAWN	CBP	11/20/2014
REVIEWED	MTH	10/22/2015

FINAL SURVEY — NOTE BOOK NO. — SURVEYED — PLOTTED — TEMPLATE — AREAS — AREAS CHECKED — By — DATE

ORIGINAL SURVEY — NOTE BOOK NO. — SURVEYED — PLOTTED — TEMPLATE — AREAS — AREAS CHECKED — By — DATE

HANSON

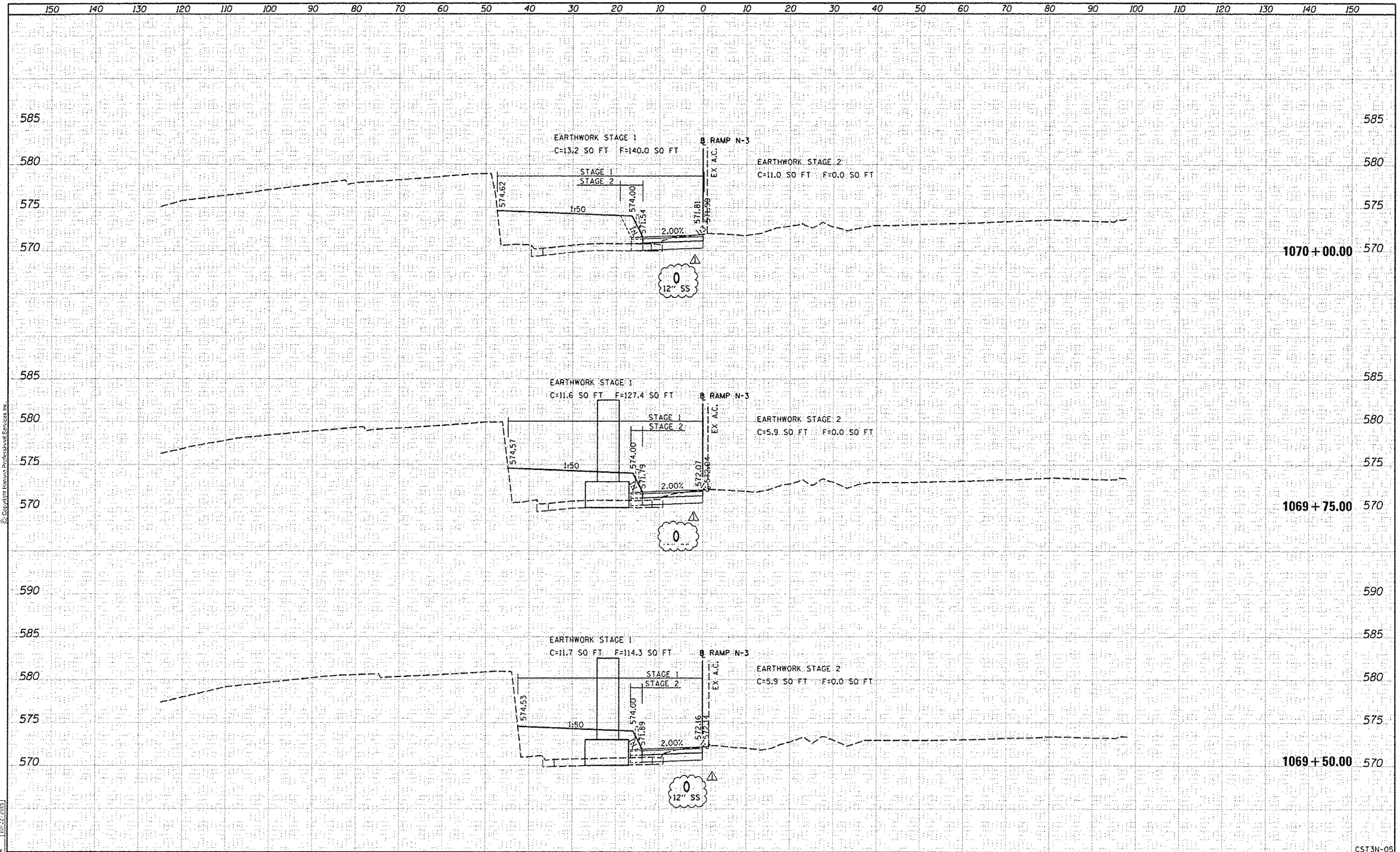

CST3N-05

FILE NAME = 02CONAB-HPS-sht-ssht3SM.dgn	USER NAME = w11:01457	DESIGNED - RLT	REVISED 05/16/17	STATE OF ILLINOIS DEPARTMENT OF TRANSPORTATION	CROSS SECTIONS TEMPORARY RAMP N-3 TEMPORARY RUNAROUND
		DRAWN - RLT	REVISED -		
	PLOT SCALE =	CHECKED - MTH	REVISED -		
	PLOT DATE = 4/10/2017	DATE - 1/20/2017	REVISED -		SCALE: SHEET NO. 5 OF 7 SHEETS STA. 1069+50.00 TO STA. 1070+00.00

F.A.I. RTE.	SECTION	COUNTY	TOTAL SHEETS	SHEET NO.
74	(81-1)R & 81-1HVBR	ROCK ISLAND	1504	1499
		CONTRACT NO. 64C08		
		(ILLINOIS) FED. AID PROJECT		

LAYOUT	CBP	11/20/2014
DRAWN	CBP	11/20/2014
REVIEWED	MTH	10/22/2015

HANSON