CONTRACT NO. 64C26

F.A.P. RTE.	SECTION	COUNTY	TOTAL SHEETS	SHEET NO.
316	101TS	LEE	9	9
STA.		TO STA.		
FED. ROAD DIST. NO.	ILLINOIS	FED. AID PROJECT		

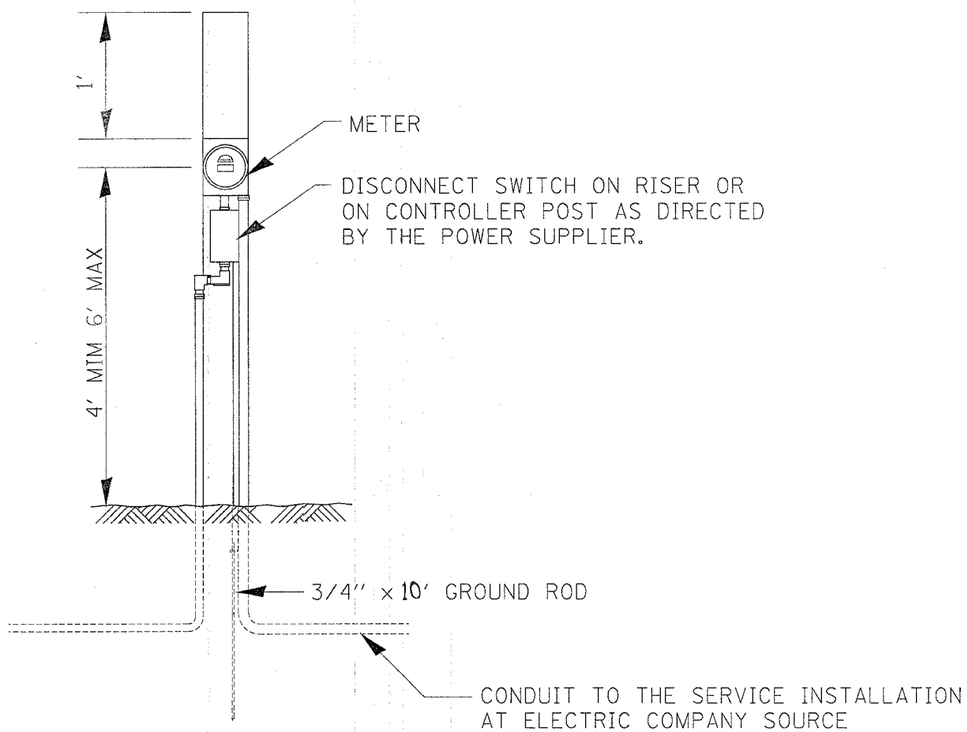

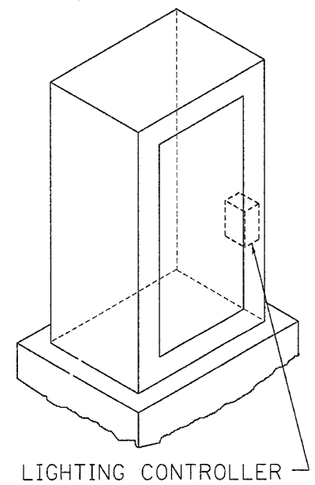

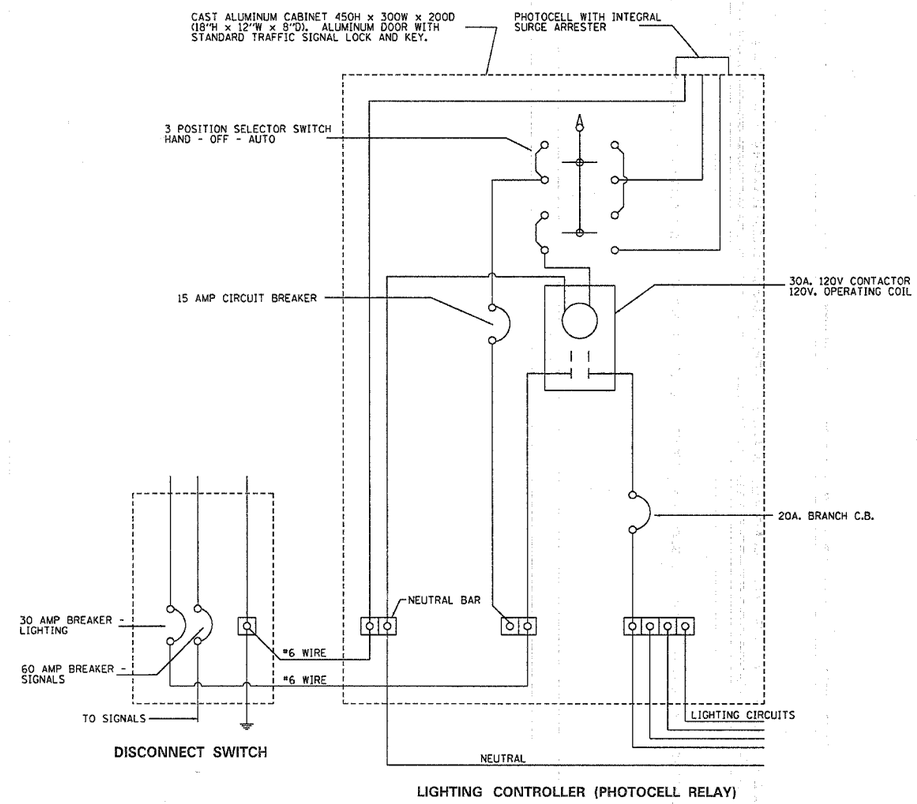

ELECTRIC SERVICE INSTALLATION, SPECIAL
(SEE SPECIAL PROVISIONS)
(DETAIL ONLY SHOW GENERAL SERVICE
WHICH VARIES BY PROVIDERS)

REVISIONS	
NAME	DATE

ILLINOIS DEPARTMENT OF TRANSPORTATION

SCALE: VERT. HORIZ.

DATE

DRAWN BY

CHECKED BY

PLOT DATE = Fri Mar 24 10:27:41 2006
FILE NAME = P:\Projects\Illinois\DULCH 64C26\126.dgn
PLOT SCALE = 28.0000 ' / in.
USER NAME = hulkt