SD047

DETAIL "B"
(NOT TO SCALE)

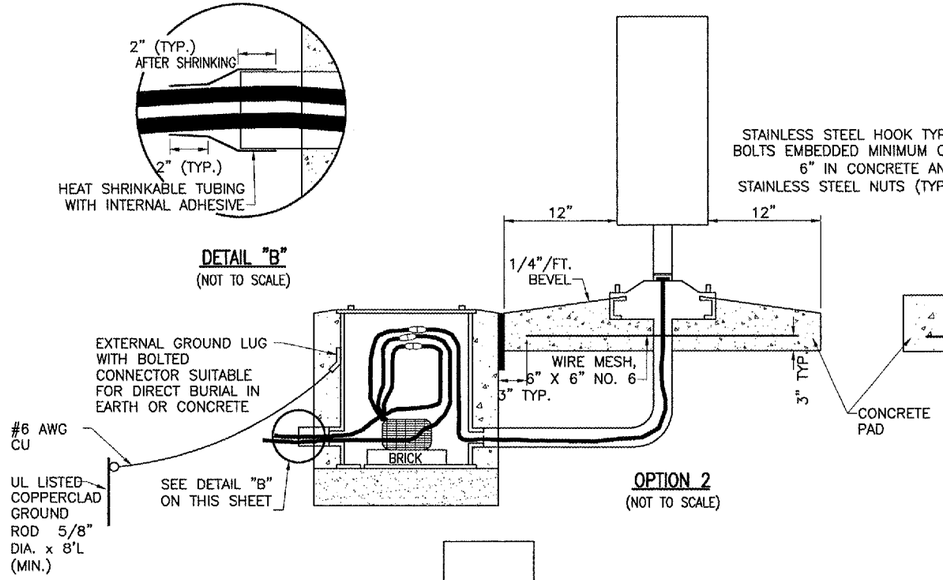

OPTION 2
(NOT TO SCALE)

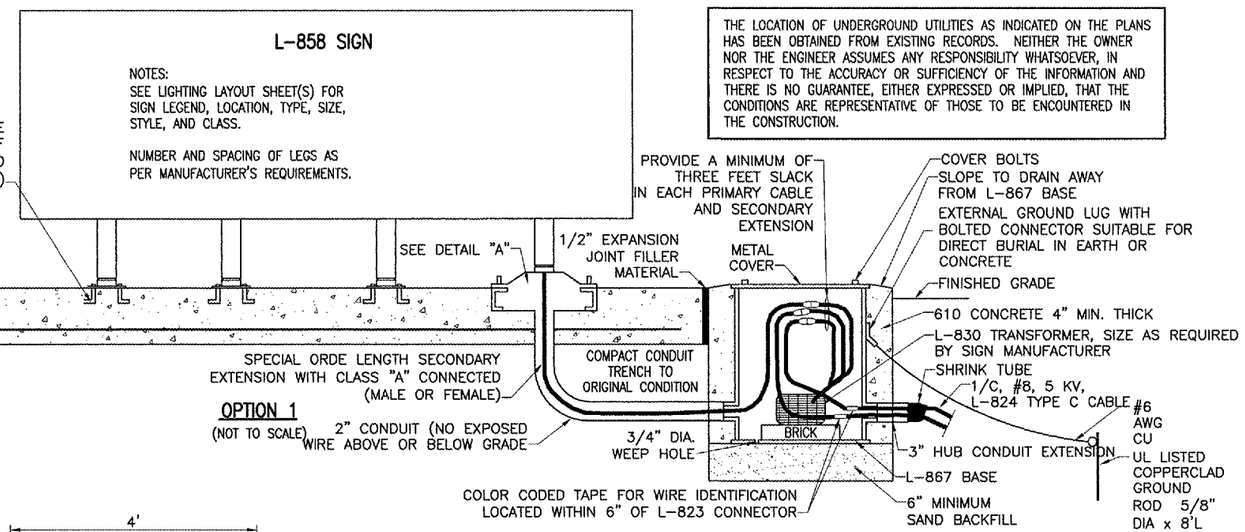

OPTION 1
(NOT TO SCALE)

THE LOCATION OF UNDERGROUND UTILITIES AS INDICATED ON THE PLANS HAS BEEN OBTAINED FROM EXISTING RECORDS. NEITHER THE OWNER NOR THE ENGINEER ASSUMES ANY RESPONSIBILITY WHATSOEVER, IN RESPECT TO THE ACCURACY OR SUFFICIENCY OF THE INFORMATION AND THERE IS NO GUARANTEE, EITHER EXPRESSED OR IMPLIED, THAT THE CONDITIONS ARE REPRESENTATIVE OF THOSE TO BE ENCOUNTERED IN THE CONSTRUCTION.

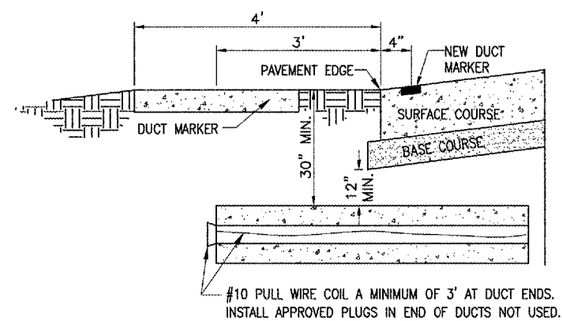

UNDERGROUND ELECTRICAL DUCT
(NOT TO SCALE)

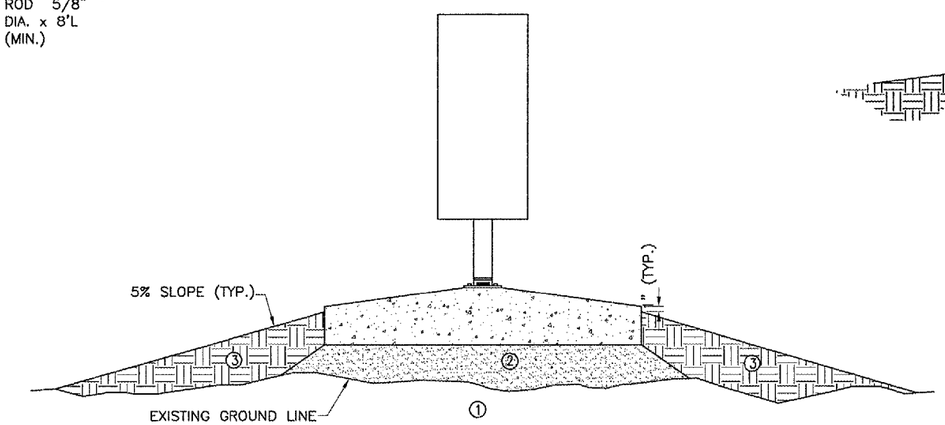

SIGN DETAIL
(NOT TO SCALE)

1. EXISTING SOD TO BE STRIPPED AND REMOVED
2. SAND BACKFILL, VARIABLE DEPTH
3. PROPOSED TOPSOIL BACKFILL MATERIAL

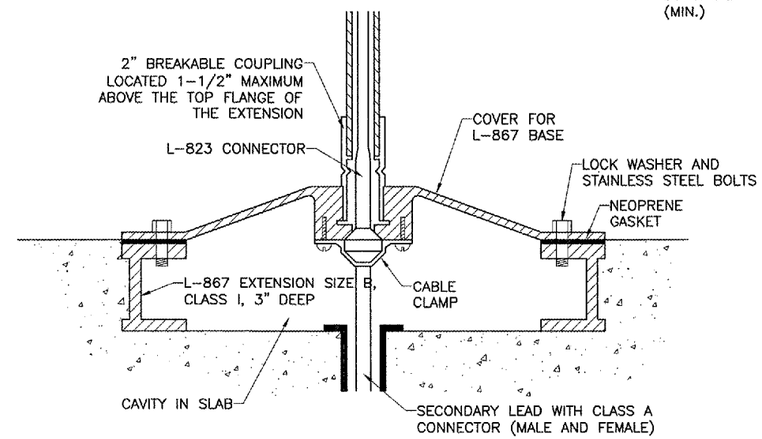

DETAIL "A"
(NOT TO SCALE)

GENERAL NOTES

SEE LIGHTING LAYOUT SHEET FOR SIGN LEGEND, LOCATION, TYPE, SIZE, STYLE, AND CLASS.

SEE SHEETS 21 THROUGH 22 FOR ELECTRICAL NOTES.

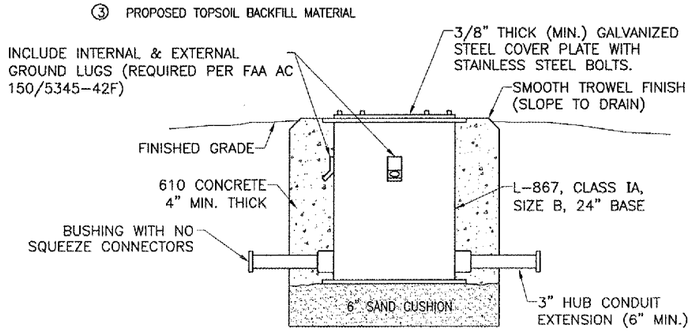

TRANSFORMER BASE/SPLICE CAN DETAIL
(NOT TO SCALE)

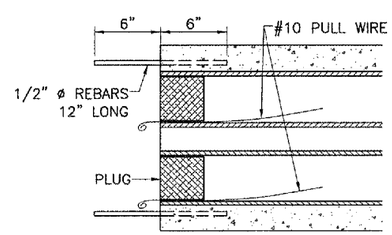

TYPICAL SECTION
(NOT TO SCALE)

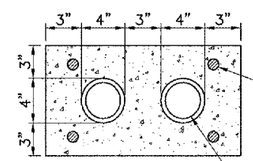

2-DUCT BANK
(NOT TO SCALE)

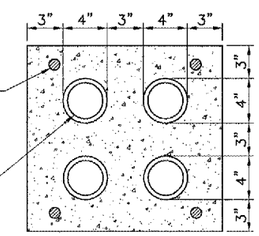

4-DUCT BANK
(NOT TO SCALE)

DATE	REVISION	BY

SAINT LOUIS DOWNTOWN AIRPORT
A Division of Bi-State Development Agency
A.I.P. PROJ.: 3-17-0039-B17
IL PROJ.: CPS-3664

IDOT Project No. 84507TXYD 0800		
Filename R-541ELE.DWG		
Scale N/A		
Date 01/06/07		
LAYOUT	JAC	01/16/07
DRAWN	MDR	01/16/07
REVIEWED	CAH	01/26/07

HANSON
Hanson Professional Services Inc.
4227 Earth City Expressway, Suite 130
St. Louis, MO 63045-1308
Offices Nationwide

CONSTRUCT TAXIWAY "A4"

PROPOSED ELECTRICAL DETAILS

19
19 of 32 sheets

APR 16, 2007 1:42 PM BAK
I:\AIRPORTS\ST LOUIS DOWNTOWN\84507TXY\AIRPORT\SHEETS\R-541ELE.DWG - ELECTRICAL DETAILS