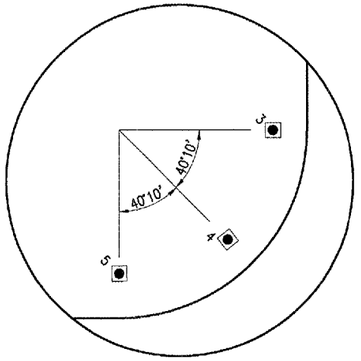

DETAIL "A"
"NOT TO SCALE"

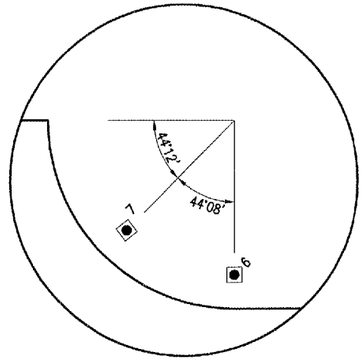

DETAIL "B"
"NOT TO SCALE"

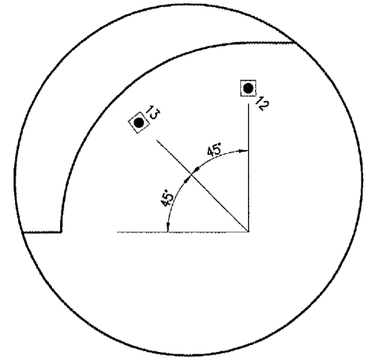

DETAIL "C"
"NOT TO SCALE"

PROPOSED TAXIWAY GUIDANCE SIGN NOTES

THE PROPOSED TAXI GUIDANCE SIGNS WILL CONFORM TO ADVISORY CIRCULAR 150/5345-44F. THE SIGNS WILL BE SIZE 1, 18-IN. SIGN FACE WITH A 12-IN. LEGEND; STYLE 2, POWERED FROM A 4.8 TO 6.6 AMP SERIES LIGHTING CIRCUIT; CLASS 2, FOR OPERATION DOWN TO -55°C; MEDIUM INTENSITY, BASE MOUNTED, DOUBLE SIDED, AS SPECIFIED ON THE PLANS.

THE SIGNS SHALL READ AS DESCRIBED ON THE CONSTRUCTION PLANS. THE PROPOSED TAXI GUIDANCE SIGNS WILL BE TYPE L-858-Y DIRECTION SIGN (BLACK LEGEND ON YELLOW BACKGROUND); TYPE L-858-R MANDATORY SIGN (WHITE LEGEND ON RED BACKGROUND); TYPE L-858-L LOCATION SIGN (YELLOW LEGEND AND BORDER ON BLACK BACKGROUND).

THE PROPOSED TAXI GUIDANCE SIGNS WILL BE CONSTRUCTED IN ACCORDANCE WITH THE DETAILS SHOWN ON THESE CONSTRUCTION PLANS. THE TAXI GUIDANCE SIGNS WILL BE LOCATED WITH THE NEAR FACE OF THE SIGN SET 20 FEET FROM THE EDGE OF THE EXISTING PAVEMENT.

THE PROPOSED TAXI GUIDANCE SIGNS WILL ALL BE LUMACURVE SIGNS. LUMACURVE IS A BRAND OF STANDARD SIGNS, INC. INFORMATION CONCERNING LUMACURVE SIGNS CAN BE OBTAINED BY CALLING CINDY KUNTZ AT 216-341-5611 EXTENSION 207.

THE PROPOSED TAXI GUIDANCE SIGNS WILL BE PAID FOR BY THE MAXIMUM NUMBER OF CHARACTERS REPRESENTED ON ONE SIGN FACE.

ALL SIGNS WILL READ AS DETAILED ON THIS SHEET.

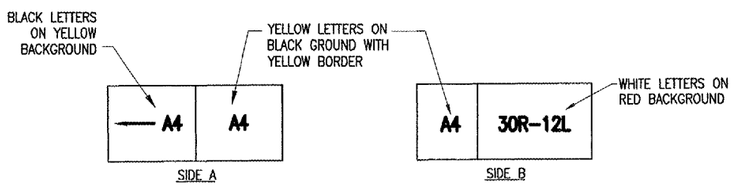

TAXI GUIDANCE SIGN DETAIL "D"
"NOT TO SCALE"

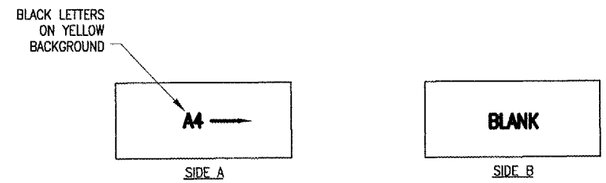

TAXI GUIDANCE SIGN DETAIL "E"
"NOT TO SCALE"

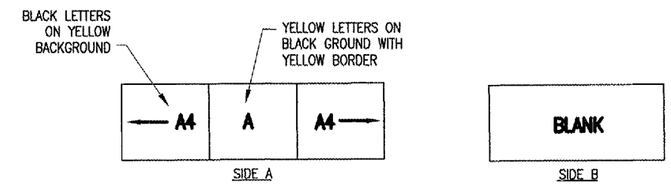

TAXI GUIDANCE SIGN DETAIL "F"
"NOT TO SCALE"

COORDINATE DATA – RUNWAY/TAXIWAY

NO.	BASELINE	STATION	OFFSET	NORTHING	EASTING
1	TAXIWAY "A"	303+96.75	40.79' RT.	694404.0038	2299495.4592
2	TAXIWAY "A"	304+74.41	49.57' RT.	694355.1739	2299556.5304
3	TAXIWAY "A"	305+28.54	55.68' RT.	694321.1558	2299599.0768
4	TAXIWAY "A"	305+56.44	69.74' RT.	694294.3916	2299615.1874
5	TAXIWAY "A4"	907+95.81	56.15' LT.	694263.5878	2299609.9915
6	TAXIWAY "A4"	906+82.26	38.02' LT.	694163.8830	2299552.6950
7	TAXIWAY "A4"	906+54.62	49.11' LT.	694149.3580	2299526.6967
8	RUNWAY 12L30R	205+51.43	47.36' LT.	694156.2481	2299491.0834
9	RUNWAY 12L30R	205+51.43	47.36' RT.	694075.9834	2299440.4882
10	RUNWAY 12L30R	207+58.15	47.36' RT.	693965.8904	2299615.4536
11	RUNWAY 12L30R	207+58.15	47.36' LT.	694046.0245	2299665.9623
12	TAXIWAY "A4"	907+02.06	38.00' RT.	694131.4935	2299624.2666
13	TAXIWAY "A4"	906+70.74	51.96' RT.	694098.3591	2299615.4395
14	TAXIWAY "A4"	907+95.81	35.07' RT.	694206.2446	2299680.9262
15	TAXIWAY "A4"	908+53.00	35.15' RT.	694247.4613	2299714.2455
16	TAXIWAY "A4"	909+05.86	35.15' RT.	694291.8033	2299750.1592
17	TAXIWAY "A4"	909+43.02	35.15' RT.	694320.6708	2299773.5397
18	TAXIWAY "A4"	909+83.02	35.15' RT.	694351.7808	2299798.6834
19	TAXIWAY "A4"	910+60.60	35.15' RT.	694412.1130	2299847.4451
TGS D	TAXIWAY "A4"	908+03.81	45.07' RT.	694203.0184	2299697.6140
TGS E	RUNWAY 12L30R	207+18.80	57.36' LT.	694079.6763	2299640.6861
TGS G	TAXIWAY "A"	303+96.71	50.86' RT.	694391.5838	2299486.9729
DUCT	TAXIWAY "A4"	907+05.06	34.58' LT.	694179.4872	2299569.7356
DUCT	TAXIWAY "A4"	907+05.06	31.00' RT.	694138.2233	2299620.7058

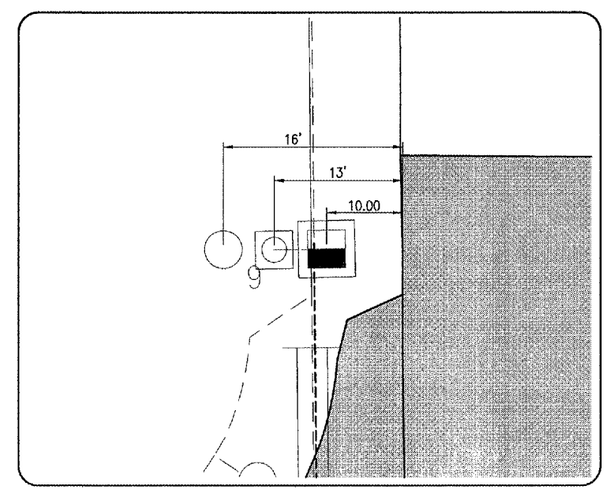

DETAIL "G"
"NOT TO SCALE"

DATE	REVISION	BY

SAINT LOUIS DOWNTOWN AIRPORT
A Division of Bi-State Development Agency
A.I.P. PROJ.: 3-17-0039-817
IL PROJ.: CPS-3664

HSI Project No. 84507TXYD 0800
Filename R-142ELE.DWG
Scale N/A
Date 01/18/07

LAYOUT	MDR	01/18/07
DRAWN	MDR	01/18/07
REVIEWED	CAH	01/26/07

HANSON
Hanson Professional Services Inc.
4227 Earth City Expressway, Suite 130
St. Louis, MO 63045-1308
Offices Nationwide

CONSTRUCT TAXIWAY "A4"

PROPOSED ELECTRICAL DETAILS AND NOTES

APR 18, 2007 1:37 PM BAK
I:\AIRPORTS\ST. LOUIS DOWNTOWN\84507TXY\AIRPORT\SHEETS\R-142ELE.DWG - PROPOSED ELECTRICAL DETAILS