BOX CULVERT END SECTION NO. 5

CONTRACT NO. 64560

F.A.P. RTE.	SECTION	COUNTY	TOTAL SHEETS	SHEET NO.
*	**	CARROLL	548	211
STA.		TO STA.		
FED. ROAD DIST. NO.	ILLINOIS	FED. AID PROJECT		

* ROUTE 17 (US 52 / IL 64)
** (1,2)RS & (3,1)RS-1

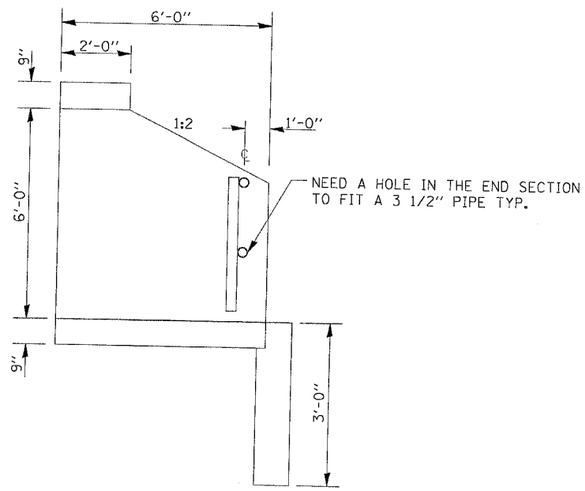

SIDE ELEVATION

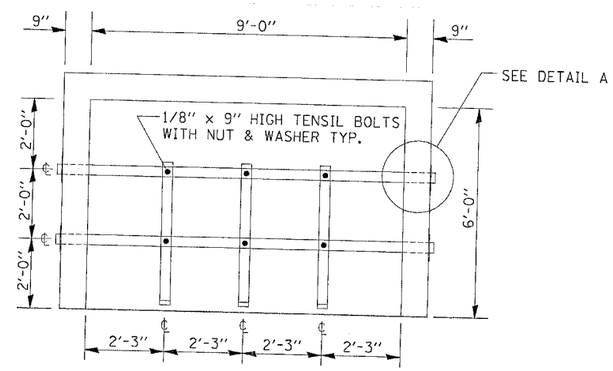

FRONT ELEVATION

BILL OF MATERIALS		
3 1/2" GALVANIZED STEEL PIPE	EACH	2 @ 10'-8" 3 @ 3'-10"
1/8" x 9" GALVANIZED. BOLTS	EACH	6
GALVANIZED STEEL PIPE CAPS	EACH	10
9" SQUARE OR ROUND 1/4" GALVANIZED PLATE	EACH	4

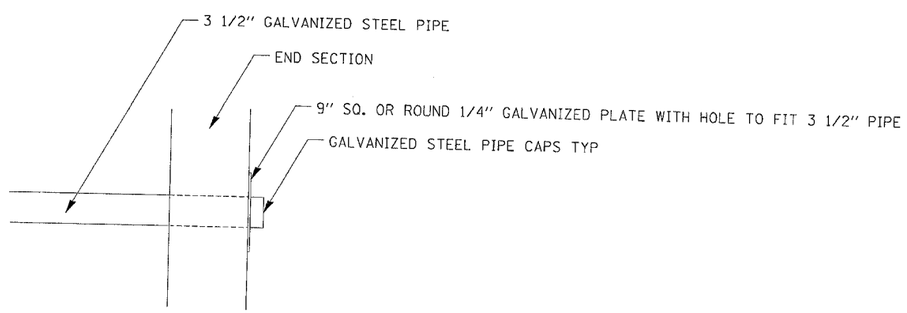

DETAIL A

GENERAL NOTES

THE PRECAST CONCRETE BOX CULVERT END SECTION SHALL CONFORM TO DISTRICT STANDARD 71.1

THE PRECAST CONCRETE BOX CULVERT END SECTION WILL BE MEASURED ON AN EACH BASIS. THE END SECTIONS WILL BE PAID FOR AT THE CONTRACT UNIT PRICE EACH FOR BOX CULVERT END SECTIONS, OF THE CULVERT NUMBER SPECIFIED, AND INCLUDE EXCAVATION, TOEWALL, COLLARS, GALVANIZED PIPES, BOLTS, NUTS, WASHERS, STEEL PLATES, AND PIPE CAPS.

STEEL PIPES SHALL CONFORM TO A.S.T.M. A-53 (TYPE E OR S) GRADE B, SCHEDULE 40, AND SHALL BE GALVANIZED CONFORMING TO A.S.T.M. A-120.

STEEL PLATES SHALL CONFORM TO AASHTO M-163 AND SHALL BE GALVANIZED CONFORMING TO AASHTO M-111.

BOLTS, NUTS, AND WASHERS SHALL BE IN ACCORDANCE WITH ARTICLE 1006.08 OF THE STANDARD SPECIFICATIONS AND SHALL BE GALVANIZED.

REVISIONS	
NAME	DATE

ILLINOIS DEPARTMENT OF TRANSPORTATION

SCALE: VERT. HORIZ.
DATE
DRAWN BY
CHECKED BY

BOX CULVERT END SECTION NO. 5

PLOT DATE = Fri Mar 23 18:45:28 2007
FILE NAME = c:\pwworking\oak\d0747408\ds\d0747408sp1.dgn
PLOT SCALE = 50.0000 ' / IN.
USER NAME = hernpenke