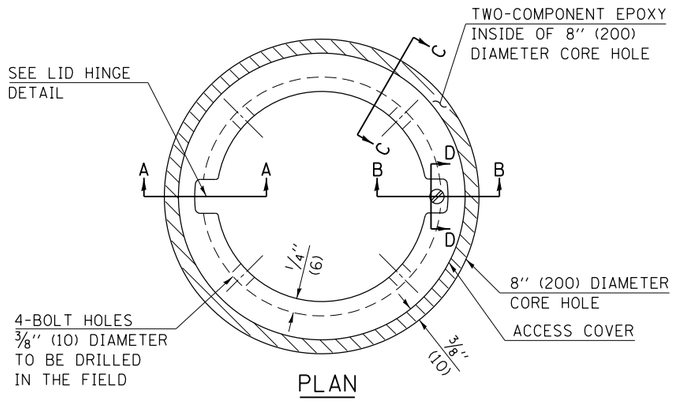

PLAN

LEGEND

- ALUMINUM CASTING
- 5'' (125) OR 6'' (150) P.V.C. PIPE
- TWO-COMPONENT EPOXY

T = THICKNESS OF PAVEMENT STRUCTURE

H = THE THICKNESS OF THE SUB-BASE GRANULAR + 1'' (25)

BILL OF MATERIAL
ALUMINUM CASTING OF THE DIMENSIONS AND SPECIFICATIONS SHOWN OR OTHER SUBJECT TO ENGINEER'S APPROVAL OF SHOP DRAWINGS, 4 EACH - 5/16'' X 2'' (M8 X 50) BOLTS WITH NUTS, EPOXY, 5'' OR 6'' (125 mm OR 150 mm) DIAMETER P.V.C. PIPE, SCHEDULE 40 (WHEN REQUIRED).

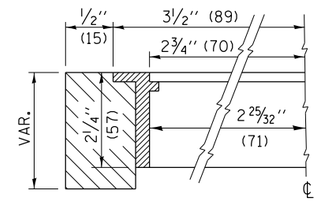

SECTION C-C

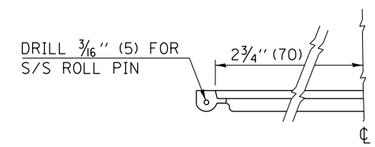

LID HINGE DETAIL

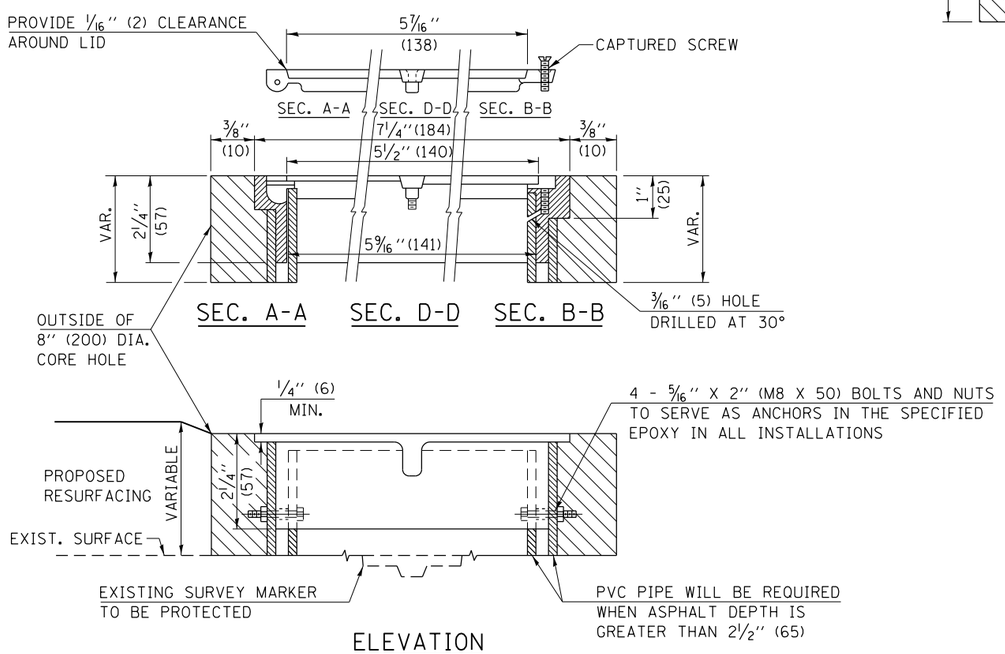

ELEVATION

EXISTING SURVEY MARKER

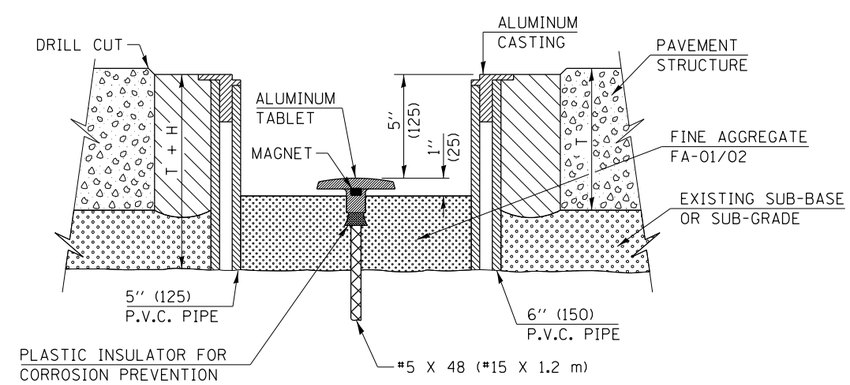

ELEVATION

PROPOSED SURVEY MARKER

NOT TO SCALE

Note: All dimensions are in INCHES (millimeters) unless otherwise shown.

DISTRICT 7 DETAIL NO. Z0070202

FILE NAME = c:\pw_work\pwidot\steffenmk\d0263618\D784977-sht-details.dgn	USER NAME = steffenmk	DESIGNED -	REVISED - MAD 6-11
		DRAWN -	REVISED -
	PLOT SCALE = 100.0000 ' / in.	CHECKED -	REVISED -
	PLOT DATE = 10/15/2012	DATE -	REVISED -

STATE OF ILLINOIS
DEPARTMENT OF TRANSPORTATION

SURVEY MARKER VAULT

SCALE: NA | SHEET NO. 1 OF 1 SHEETS | STA. | TO STA.

F.A.P. RTE.	SECTION	COUNTY	TOTAL SHEETS	SHEET NO.
332	(16,17,18)RS-2	LAWRENCE	40	32

CONTRACT NO. 94977

FED. ROAD DIST. NO. | ILLINOIS | FED. AID PROJECT