Illinois Department of Transportation
Division of Highways
IDOT

SOIL BORING LOG

Page 1 of 1

Date 12/22/15

ROUTE FAP 301 DESCRIPTION P92-103-05x US 20 Prop. Culvert, 200' W. of Funston Road LOGGED BY W. Garza

SECTION 24RS-5 LOCATION Stockton Twp. - 4SE, SEC. , TWP. 27N, RNG. 4E

COUNTY Jo Daviess DRILLING METHOD Hollow Stem Auger HAMMER TYPE CME-45 Automatic

STRUCT. NO.
Station

Latitude 42° 21' 25.66"
Longitude -90° 02' 33.72"

Northing 2,072,687.2623
Easting 2,330,089.0247

BORING NO. B-2d
Station 2101+88
Offset 12.00ft Rt CL
Ground Surface Elev. 924.30 ft

Surface Water Elev. ft
Stream Bed Elev. 920.30 ft

Groundwater Elev.:
First Encounter 907.3 ft ▼
Upon Completion 908.3 ft ▽
After Hrs. ft

Northing and Easting were calculated using the ILHP-WF coordinate system

Description	Elev.	DEPTH (ft)	BLOWS (/6")	UCS Qu (tsf)	MOIST (%)
13" Asphalt	922.30				
STIFF brown SILTY CLAY LOAM	920.80		2 2 5	1.5 B	10.0
MEDIUM light brown SILTY CLAY LOAM	918.30	-5	2 2 4	0.8 B	28.0
SOFT tan SILTY CLAY LOAM	915.80		0 1 3	0.5 B	28.0
MEDIUM tan SILTY LOAM	913.30	-10	0 1 3	0.8 B	23.0
VERY SOFT tan SILTY LOAM	910.80		0 2 3	0.2 P	27.0
STIFF gray SILTY CLAY	907.80	-15	0 2 4	1.3 B	23.0
VERY DENSE tan weathered LIMESTONE	905.80		1 100/6"		
End of Boring		-20			

The Unconfined Compressive Strength (UCS) Failure Mode is indicated by (B-Bulge, S-Shear, P-Penetrometer)
The SPT (N value) is the sum of the last two blow values in each sampling zone (AASHTO T206)

BBS, from 137 (Rev. 8-99)

Illinois Department of Transportation
Division of Highways
IDOT

SOIL BORING LOG

Page 1 of 1

Date 12/24/15

ROUTE FAP 301 DESCRIPTION P92-103-05x US 20 Prop. Culvert, 50' S. of US 20 on S. Golf Road LOGGED BY W. Garza

SECTION 24RS-5 LOCATION Stockton Twp. - 3 S 1/2, SEC. , TWP. 27N, RNG. 4E

COUNTY Jo Daviess DRILLING METHOD Hollow Stem Auger HAMMER TYPE CME-45 Automatic

STRUCT. NO.
Station

Latitude 42° 21' 26.14"
Longitude -90° 01' 52.14"

Northing 2,072,740.4986
Easting 2,333,210.3795

BORING NO. B-2e
Station 2131+08
Offset 52.00ft Rt
Ground Surface Elev. 988.10 ft

Surface Water Elev. ft
Stream Bed Elev. ft

Groundwater Elev.:
First Encounter 976.1 ft ▼
Upon Completion Dry ft
After Hrs. ft

Northing and Easting were calculated using the ILHP-WF coordinate system

Description	Elev.	DEPTH (ft)	BLOWS (/6")	UCS Qu (tsf)	MOIST (%)
Road Rock	986.10				
STIFF brown SILTY CLAY LOAM	984.60		2 4 6	1.3 P	27.0
STIFF tan SILTY CLAY LOAM	982.10	-5	2 3 4	1.0 B	23.0
MEDIUM tan/gray SILTY CLAY LOAM	979.60		1 1 3	0.5 B	29.0
VERY STIFF tan SILTY CLAY	977.10	-10	2 3 5	2.6 P	19.0
VERY STIFF tan/gray CLAY LOAM	974.10		3 5 9	2.5 P	18.0
VERY DENSE tan/gray SHALE	972.10	-15	13 17 36		
VERY DENSE gray SHALE	969.60		24 100/10"		
End of Boring		-20			

The Unconfined Compressive Strength (UCS) Failure Mode is indicated by (B-Bulge, S-Shear, P-Penetrometer)
The SPT (N value) is the sum of the last two blow values in each sampling zone (AASHTO T206)

BBS, from 137 (Rev. 8-99)

MODEL: Default
FILE NAME: pw:\\rsandh-pw01\Documents\Transportation\Projects\130059.000 US 20 Stockton\CADfiCAD Sheets\D264B40-sht-bbg09.dgn

RS&H

USER NAME = BlomquiM	DESIGNED - ALM	REVISED -
	DRAWN - ALM	REVISED -
PLOT SCALE = 2.0000 ' / in.	CHECKED - CPK	REVISED -
PLOT DATE = 10/3/2022	DATE - 2/18/2019	REVISED -

STATE OF ILLINOIS
DEPARTMENT OF TRANSPORTATION

BORING LOGS

SCALE: N.T.S. SHEET 9 OF 14 SHEETS STA. TO STA.

F.A.P. RTE.	SECTION	COUNTY	TOTAL SHEETS	SHEET NO.
301	24R	JO DAVIESS	594	301

CONTRACT NO. 64B40
ILLINOIS FED. AID PROJECT

Illinois Department of Transportation
Division of Highways
IDOT

SOIL BORING LOG

Page 1 of 1

Date 12/22/15

ROUTE FAP 301 DESCRIPTION P92-103-05x US 20 Prop. Culvert, .2 m. E. of S. Golf Road LOGGED BY W. Garza

SECTION 24RS-5 LOCATION Stockton twp. - 10NE, SEC. , TWP. 27N, RNG. 4E

COUNTY Jo Daviess DRILLING METHOD Hollow Stem Auger HAMMER TYPE CME-45 Automatic

STRUCT. NO. 043-0114
Station 2141+25

Latitude 42° 21' 23.30"
Longitude -90° 01' 40.48"

Northing 2,072,454.0205
Easting 2,334,086.2762

BORING NO. B-2f
Station 2141+31
Offset 13.00ft Rt CL
Ground Surface Elev. 1015.60 ft

Surface Water Elev. ____ ft
Stream Bed Elev. ____ ft

Groundwater Elev.:
First Encounter None ft
Upon Completion Dry ft
After ____ Hrs. ____ ft

Description	Elev.	DEPTH (ft)	BLOWS (/6")	UCS Qu (tsf)	MOIST (%)
Shoulder Rock					
	1013.60				
VERY STIFF tan/gray CLAY LOAM			3 4 5	2.3 P	16.0
	1012.10				
HARD gray SILTY CLAY		-5	8 9 13	4.4 S	13.0
	1009.60				
HARD tan CLAY LOAM			6 8 10	6.6 B	14.0
	1007.10				
HARD gray SILTY CLAY		-10	8 10 18	5.7 S	13.0
	1004.10				
DENSE gray SHALE			10 12 20		
	1002.10				
VERY DENSE gray SHALE		-15	11 36 61		
	999.60				
End of Boring		-20			

Northing and Easting were calculated using the ILHP-WF coordinate system

The Unconfined Compressive Strength (UCS) Failure Mode is indicated by (B-Bulge, S-Shear, P-Penetrometer)
The SPT (N value) is the sum of the last two blow values in each sampling zone (AASHTO T206)

BBS, from 137 (Rev. 8-99)

Illinois Department of Transportation
Division of Highways
IDOT

SOIL BORING LOG

Page 1 of 1

Date 1/7/16

ROUTE FAP 301 DESCRIPTION P92-103-05x US 20 Prop. Culvert, .4 m. W. of S. Park Road, N. side of US 20 LOGGED BY W. Garza

SECTION 24RS-5 LOCATION Stockton Twp. - 11NW, SEC. , TWP. 27N, RNG. 4E

COUNTY Jo Daviess DRILLING METHOD Hollow Stem Auger HAMMER TYPE CME-45 Automatic

STRUCT. NO. ____
Station ____

Latitude 42° 21' 22.41"
Longitude -90° 01' 12.63"

Northing 2,072,367.8841
Easting 2,336,177.3178

BORING NO. B-2g
Station 2164+39
Offset 18.00ft Rt Prop CL
Ground Surface Elev. 1025.50 ft

Surface Water Elev. ____ ft
Stream Bed Elev. ____ ft

Groundwater Elev.:
First Encounter None ft
Upon Completion Dry ft
After ____ Hrs. ____ ft

Description	Elev.	DEPTH (ft)	BLOWS (/6")	UCS Qu (tsf)	MOIST (%)
STIFF brown SILTY CLAY LOAM				1.0 P	28.0
	1023.50				
STIFF tan/light brown SILTY CLAY LOAM			2 3 5	1.3 P	26.0
	1022.00				
STIFF light gray SILTY CLAY with LIMESTONE fragments		-5	6 9 10	1.8 P	16.0
	1019.50				
HARD tan CLAY LOAM with weathered LIMESTONE fragments			10 10 14	4.5 B	18.0
	1017.00				
VERY STIFF light gray CLAY LOAM with weathered LIMESTONE fragments		-10	5 8 10	2.1 B	15.0
	1014.50				
VERY STIFF light gray CLAY LOAM with weathered LIMESTONE fragments			4 7 11	2.1 B	16.0
	1012.00				
HARD light gray/tan CLAY LOAM with weathered LIMESTONE		-15	2 5 9	4.5 P	17.0
	1009.50				
VERY STIFF light gray/tan CLAY LOAM			4 6 13	3.7 B	18.0
	1007.00				
HARD tan/light gray CLAY LOAM		-20	5		
HARD tan/light gray CLAY LOAM (continued)			6 18	5.4 B	17.0
	1004.50				
DENSE tan/light gray CLAY LOAM			13 16 20		14.0
no test sample recovered					
	1001.50				
VERY DENSE light gray SHALE		-25	21 100/10"		
	999.50				
End of Boring		-30			
		-35			
		-40			

Northing and Easting were calculated using the ILHP-WF coordinate system

The Unconfined Compressive Strength (UCS) Failure Mode is indicated by (B-Bulge, S-Shear, P-Penetrometer)
The SPT (N value) is the sum of the last two blow values in each sampling zone (AASHTO T206)

BBS, from 137 (Rev. 8-99)

MODEL: Default
FILE NAME: pw:\\rs-dh-pw.pentlly.com:rsandh-pw40\Documents\Transportation\Projects\130059.000 US 20 Stockton\CAD\CAD Sheets\D264B40-sht-bbg10.dgn

RS&H

USER NAME = BlomquiM	DESIGNED - ALM	REVISED -	
	DRAWN - ALM	REVISED -	
PLOT SCALE = 2.0000 ' / in.	CHECKED - CPK	REVISED -	
PLOT DATE = 10/3/2022	DATE - 2/18/2019	REVISED -	

STATE OF ILLINOIS
DEPARTMENT OF TRANSPORTATION

BORING LOGS

SCALE: N.T.S. SHEET 10 OF 14 SHEETS STA. TO STA.

F.A.P. RTE.	SECTION	COUNTY	TOTAL SHEETS	SHEET NO.
301	24R	JO DAVIESS	594	302
		CONTRACT NO. 64B40		
		ILLINOIS FED. AID PROJECT		

Illinois Department of Transportation
Division of Highways
IDOT

SOIL BORING LOG

Page 1 of 1

Date 1/14/16

ROUTE FAP 301 DESCRIPTION P92-103-05x US 20 Prop. Culvert, .3 m. W. of S. Park Road LOGGED BY W. Garza

SECTION 24RS-5 LOCATION Stockton Twp. - 11NW, SEC. , TWP. 27N, RNG. 4E

COUNTY Jo Daviess DRILLING METHOD Hollow Stem Auger HAMMER TYPE CME-45 Automatic

STRUCT. NO.
Station

Latitude 42° 21' 23.29"
Longitude -90° 01' 01.34"
Northing 2,072,458.6448
Easting 2,337,025.0324

BORING NO. B-2h
Station 2171+14
Offset 22.00ft Rt Prop CL
Ground Surface Elev. 1006.50 ft

Surface Water Elev. ft
Stream Bed Elev. ft

Groundwater Elev.:
First Encounter 984.5 ft ▼
Upon Completion 996.5 ft ▽
After Hrs. ft

Description	Elev.	DEPTH (ft)	BLOWS (/6")	UCS Qu (tsf)	MOIST (%)
SOFT brown SILTY CLAY LOAM with 8RGANICS				0.3 P	35.0
	1004.50				
STIFF light brown SILTY CLAY LOAM			2 3 5	1.2 B	29.0
	1003.00				
STIFF tan SILTY CLAY LOAM		-5	1 3 4	1.2 B	26.0
	1000.50				
SOFT tan SILTY LOAM			0 2 3	0.3 P	28.0
	998.00				
SOFT tan SILTY LOAM with LIMESTONE fragments		▽-10	0 2 3	0.3 P	27.0
	995.00				
MEDIUM tan weathered LIMESTONE, probable ledge rock			2 5 7		
	992.50				
HARD light gray/tan CLAY LOAM		-15	5 6 11	5.2 B	18.0
	990.50				
HARD tan CLAY LOAM			11 12 15	9.1 B	15.0
	988.00				
HARD tan CLAY LOAM		-20	5		

Description	Elev.	DEPTH (ft)	BLOWS (/6")	UCS Qu (tsf)	MOIST (%)
HARD tan CLAY LOAM (continued)			8 14	4.7 B	18.0
	985.00				
DENSE gray DOLOMITE			8 16 23		
	983.00				
DENSE gray SHALE		-25	13 14 21		
	980.50				
End of Boring					
		-30			
		-35			
		-40			

Northing and Easting were calculated using the ILHP-WF coordinate system

The Unconfined Compressive Strength (UCS) Failure Mode is indicated by (B-Bulge, S-Shear, P-Penetrometer)
The SPT (N value) is the sum of the last two blow values in each sampling zone (AASHTO T206)

BBS, from 137 (Rev. 8-99)

Illinois Department of Transportation
Division of Highways
IDOT

SOIL BORING LOG

Page 1 of 1

Date 1/15/16

ROUTE FAP 301 DESCRIPTION P92-103-05x US 20 Prop. Culvert, .1 m. W. of S. Park Road LOGGED BY J. Strating

SECTION 24RS-5 LOCATION Stockton Twp. - 2SW, SEC. , TWP. 27N, RNG. 4E

COUNTY Jo Daviess DRILLING METHOD Hollow Stem Auger HAMMER TYPE CME-45 Automatic

STRUCT. NO.
Station 2180+76

Latitude 42° 21' 27.27"
Longitude -90° 00' 48.29"
Northing 2,072,863.4398
Easting 2,338,004.0704

BORING NO. B-2i
Station 2180+90
Offset 22.00ft Rt CL
Ground Surface Elev. 998.40 ft

Surface Water Elev. ft
Stream Bed Elev. 992.70 ft

Groundwater Elev.:
First Encounter ft
Upon Completion ft
After Hrs. ft

Description	Elev.	DEPTH (ft)	BLOWS (/6")	UCS Qu (tsf)	MOIST (%)
Asphalt Shoulder 8" Agg Base					
	996.40				
No Recovery			5 2 3		
	994.90				
MEDIUM tan/gray SILTY CLAY LOAM		-5	2 2 4	0.8 P	33.0
	992.40				
SOFT tan/gray SILTY CLAY LOAM			1 1 2	0.4 B	33.0
	989.90				
SOFT tan/gray SILTY CLAY LOAM		-10	1 1 2	0.4 B	31.0
	987.40				
STIFF brown SILTY CLAY LOAM			2 3 4	1.3 B	24.0
	984.90				
STIFF brown SILTY CLAY LOAM		-15	1 1 5	1.3 B	27.0
	982.40				
STIFF dark gray CLAY LOAM			1 3 6	1.4 B	24.0
	979.90				
STIFF gray/brown CLAY LOAM		-20	2		

Description	Elev.	DEPTH (ft)	BLOWS (/6")	UCS Qu (tsf)	MOIST (%)
STIFF gray/brown CLAY LOAM (continued)			4 7	1.7 B	26.0
	977.40				
STIFF gray CLAY LOAM			2 4 6	1.3 B	24.0
	974.90				
End of Boring					
		-25			
		-30			
		-35			
		-40			

Northing and Easting were calculated using the ILHP-WF coordinate system

The Unconfined Compressive Strength (UCS) Failure Mode is indicated by (B-Bulge, S-Shear, P-Penetrometer)
The SPT (N value) is the sum of the last two blow values in each sampling zone (AASHTO T206)

BBS, from 137 (Rev. 8-99)

Illinois Department of Transportation
Division of Highways
IDOT

SOIL BORING LOG

Page 1 of 1

Date 7/9/15

ROUTE FAP 301 DESCRIPTION P92-103-05x US 20 Culvert, .6 m. W. of Canyon Park Road LOGGED BY W. Garza

SECTION 24RS-5 LOCATION Stockton Twp. - 8NE, SEC. , TWP. 27N, RNG. 4E

COUNTY Jo Daviess DRILLING METHOD Hollow Stem Auger HAMMER TYPE B-55

STRUCT. NO. 043-1104
Station 2043+07

Latitude 42° 21' 28.62"
Longitude -90° 03' 46.44"

Northing 2,072,979.4939
Easting 2,324,629.0580

BORING NO. B-2j
Station 14' W
Offset 24.50ft N CL
Ground Surface Elev. 913.50 ft

Surface Water Elev. ____ ft
Stream Bed Elev. 910.70 ft

Groundwater Elev.:
First Encounter None ft
Upon Completion Dry ft
After ____ Hrs. ____ ft

Description	Elev.	DEPTH (ft)	BLOWS (/6")	UCS Qu (tsf)	MOIST (%)
SOFT brown SILTY CLAY LOAM	912.00			0.3 P	31.0
SOFT brown SILTY LOAM	910.50		2 2 3	0.3 P	31.0
MEDIUM light brown SILTY LOAM	908.00	-5	0 1 4	0.7 B	27.0
SOFT tan SILTY LOAM	905.50		0 2 3	0.4 B	27.0
STIFF tan CLAY LOAM	902.50	-10	0 1 4	1.2 B	25.0
VERY DENSE tan weathered LIMESTONE	900.50		3 5 59		
VERY DENSE tan weathered LIMESTONE	898.00	-15	100/4"		
End of Boring		-20			

Northing and Easting were calculated using the ILHP-WF coordinate system

The Unconfined Compressive Strength (UCS) Failure Mode is indicated by (B-Bulge, S-Shear, P-Penetrometer)
The SPT (N value) is the sum of the last two blow values in each sampling zone (AASHTO T206)

BBS, from 137 (Rev. 8-99)

Illinois Department of Transportation
Division of Highways
IDOT

SOIL BORING LOG

Page 1 of 1

Date 7/9/15

ROUTE FAP 301 DESCRIPTION P92-103-05x US 20 Culvert, .5 m. W. of Canyon Park Road LOGGED BY W. Garza

SECTION 24RS-5 LOCATION Stockton Twp. - 8NE, SEC. , TWP. 27N, RNG. 4E

COUNTY Jo Daviess DRILLING METHOD Hollow Stem Auger HAMMER TYPE B-55

STRUCT. NO. 043-1105
Station

Latitude 42° 21' 28.63"
Longitude -90° 03' 40.42"

Northing 2,072,981.5083
Easting 2,325,080.9539

BORING NO. B-2k
Station 2048+23
Offset 25.00ft Lt CL
Ground Surface Elev. 913.80 ft

Surface Water Elev. ____ ft
Stream Bed Elev. 95.00 ft

Groundwater Elev.:
First Encounter None ft
Upon Completion Dry ft
After ____ Hrs. ____ ft

Description	Elev.	DEPTH (ft)	BLOWS (/6")	UCS Qu (tsf)	MOIST (%)
MEDIUM brown SILTY CLAY LOAM	912.30			0.5 P	26.0
MEDIUM brown SILTY LOAM	910.80		1 2 3	0.8 P	26.0
MEDIUM tan SILTY CLAY LOAM	908.30	-5	0 1 4	0.7 P	26.0
SOFT tan SILTY LOAM	905.80		0 3 3	0.4 B	26.0
STIFF reddish brown CLAY LOAM	902.80	-10	0 1 4	1.6 P	27.0
MEDIUM tan weathered LIMESTONE	900.80		2 3 15		
VERY DENSE tan weathered LIMESTONE	898.30	-15	100/3"		
End of Boring		-20			

Northing and Easting were calculated using the ILHP-WF coordinate system

The Unconfined Compressive Strength (UCS) Failure Mode is indicated by (B-Bulge, S-Shear, P-Penetrometer)
The SPT (N value) is the sum of the last two blow values in each sampling zone (AASHTO T206)

BBS, from 137 (Rev. 8-99)

Illinois Department of Transportation
Division of Highways
IDOT

SOIL BORING LOG

Page 1 of 1

Date 7/9/15

ROUTE FAP 301 DESCRIPTION P92-103-05x US 20 Culvert, .4 m. W. of Canyon Park Road LOGGED BY W. Garza

SECTION 24RS-5 LOCATION Stockton Twp. - 8NE, SEC. , TWP. 27N, RNG. 4E

COUNTY Jo Daviess DRILLING METHOD Hollow Stem Auger HAMMER TYPE B-55

STRUCT. NO. 043-1106
Station 2055+84

Latitude 42° 21' 28.52"
Longitude -90° 03' 31.30"

Northing 2,072,970.7073
Easting 2,325,765.5720

BORING NO. B-2L
Station 2056+06
Offset 38.00ft Lt CL
Ground Surface Elev. 910.60 ft

Surface Water Elev. ft
Stream Bed Elev. 92.20 ft

Groundwater Elev.:
First Encounter 901.6 ft ▼
Upon Completion Dry ft
After ___ Hrs. ft

Description	Elev.	DEPTH (ft)	BLOWS (/6")	UCS Qu (tsf)	MOIST (%)
SOFT brown SILTY CLAY LOAM				0.2 P	30.0
	909.10				
MEDIUM brown SILTY LOAM			0 2 2	0.6 P	33.0
	907.60				
MEDIUM tan SILTY CLAY LOAM		-5	0 1 4	0.6 B	28.0
	905.10				
STIFF tan CLAY LOAM			3 4 8	1.3 B	34.0
	902.10				
MEDIUM tan weathered LIMESTONE		-10	5 4 15		
	900.10				
VERY DENSE tan weathered LIMESTONE			100/3"		
	897.60				
End of Boring		-15			
		-20			

Northing and Easting were calculated using the ILHP-WF coordinate system

The Unconfined Compressive Strength (UCS) Failure Mode is indicated by (B-Bulge, S-Shear, P-Penetrometer)
The SPT (N value) is the sum of the last two blow values in each sampling zone (AASHTO T206)

BBS, from 137 (Rev. 8-99)

Illinois Department of Transportation
Division of Highways
IDOT

SOIL BORING LOG

Page 1 of 1

Date 3/28/13

ROUTE FAP 301 DESCRIPTION P92-103-05x US 20 Prop. Culvert, 1/4 mile West of Rush Creek LOGGED BY w. Garza

SECTION 24RS-5 LOCATION Stockton Twp. - 5SW, SEC. , TWP. 27N, RNG. 4E

COUNTY Jo Daviess DRILLING METHOD Hollow Stem Auger HAMMER TYPE CME-55

STRUCT. NO.
Station 2005+00

Latitude
Longitude

Northing
Easting

BORING NO. B-2m
Station 2004+10
Offset 9.00ft Lt exist. CL
Ground Surface Elev. 853.40 ft

Surface Water Elev. ft
Stream Bed Elev. ft

Groundwater Elev.:
First Encounter ft
Upon Completion ft
After ___ Hrs. ft

Description	Elev.	DEPTH (ft)	BLOWS (/6")	UCS Qu (tsf)	MOIST (%)
Asphalt Concrete					
	851.40				
	849.90				
MEDIUM brown SILTY CLAY		-5	1 2 4	0.8 P	
	847.40				
STIFF light brown SILTY CLAY with LIMESTONE fragments			3 4 5	1.5 B	25.0
	844.40				
MEDIUM tan weathered LIMESTONE fill		-10	7 6 5		
	842.40				
DENSE tan weathered LIMESTONE fill			14 11 21		
	839.90				
LOOSE tan weathered LIMESTONE fill		-15	6 6 3		
	837.40				
MEDIUM tan weathered LIMESTONE fill			11 9 10		
Auger Refusal @ 19'	834.40				
End of Boring		-20			

The Unconfined Compressive Strength (UCS) Failure Mode is indicated by (B-Bulge, S-Shear, P-Penetrometer)
The SPT (N value) is the sum of the last two blow values in each sampling zone (AASHTO T206)

BBS, from 137 (Rev. 8-99)

MODEL: Default
FILE NAME: pw:\\rsandh-pw.bentley.com:rsandh-pw01\Documents\Transportation\Projects\130059.000 US 20 Stockton\CADCAD Sheets\D264B40-sht-bog13.dgn

RS&H

USER NAME = BlomquiM	DESIGNED - ALM	REVISED -
	DRAWN - ALM	REVISED -
PLOT SCALE = 2.0000 ' / in.	CHECKED - CPK	REVISED -
PLOT DATE = 10/3/2022	DATE - 2/18/2019	REVISED -

STATE OF ILLINOIS
DEPARTMENT OF TRANSPORTATION

BORING LOGS

SCALE: N.T.S. SHEET 13 OF 14 SHEETS STA. TO STA.

F.A.P. RTE.	SECTION	COUNTY	TOTAL SHEETS	SHEET NO.
301	24R	JO DAVIESS	594	305
		CONTRACT NO. 64B40		
		ILLINOIS FED. AID PROJECT		

Illinois Department of Transportation
Division of Highways
IDOT

SOIL BORING LOG

Page 1 of 1

Date 4/20/16

ROUTE FAP 301 DESCRIPTION P92-103-05x US 20 Proposed Culvert, N. side of US 20, .1 m. E. of Logemann Road LOGGED BY W. Garza

SECTION 24RS-5 LOCATION Stockton Twp. - 6SE, SEC. , TWP. 27N, RNG. 4E

COUNTY Jo Daviess DRILLING METHOD Hollow Stem Auger HAMMER TYPE CME-45

STRUCT. NO.
Station

Latitude
Longitude

Northing
Easting

BORING NO. B-2n
Station 1986+68
Offset 37.00ft Rt Prop CL
Ground Surface Elev. 892.70 ft

Surface Water Elev. ft
Stream Bed Elev. ft

Groundwater Elev.:
First Encounter None ft
Upon Completion Dry ft
After ___ Hrs. ft

Description	Elev.	DEPTH (ft)	BLOWS (/6")	UCS Qu (tsf)	MOIST (%)
SOFT brown SILTY CLAY LOAM	890.70			0.4 P	15.0
MEDIUM light brown SILTY LOAM	889.20		2 3 5	0.6 B	25.0
MEDIUM light brown SILTY LOAM	886.70	-5	1 1 3	0.6 B	28.0
SOFT light brown SILTY LOAM	884.20		0 1 3	0.3 B	31.0
STIFF brown CLAY LOAM with LIMESTONE fragments	881.20	-10	0 2 3	1.0 B	45.0
VERY DENSE tan weathered LIMESTONE	879.20		45 14 100/5.5"		
End of Boring		-15 -20			

The Unconfined Compressive Strength (UCS) Failure Mode is indicated by (B-Bulge, S-Shear, P-Penetrometer)
The SPT (N value) is the sum of the last two blow values in each sampling zone (AASHTO T206)

BBS, from 137 (Rev. 8-99)

Illinois Department of Transportation
Division of Highways
IDOT

SOIL BORING LOG

Page 1 of 1

Date 4/18/16

ROUTE FAP 301 DESCRIPTION P92-103-05x US 20 Proposed Culvert, N. side of US 20, .1 m. E. of Logemann Road LOGGED BY W. Garza

SECTION 24RS-5 LOCATION Stockton Twp. - 11NW, SEC. , TWP. 27N, RNG. 4E

COUNTY Jo Daviess DRILLING METHOD Hollow Stem Auger HAMMER TYPE CME-45

STRUCT. NO.
Station

Latitude
Longitude

Northing
Easting

BORING NO. B-2o
Station 596+62
Offset 20.00ft Lt Prop Cl
Ground Surface Elev. 1043.40 ft

Surface Water Elev. ft
Stream Bed Elev. ft

Groundwater Elev.:
First Encounter ft
Upon Completion ft
After ___ Hrs. ft

Description	Elev.	DEPTH (ft)	BLOWS (/6")	UCS Qu (tsf)	MOIST (%)
MEDIUM brown SILTY CLAY LOAM	1041.40			0.5 P	37.0
VERY STIFF tan/gray CLAY LOAM	1039.90		2 2 6	2.3 P	20.0
HARD tan CLAY LOAM with LIMESTONE	1037.40	-5	6 7 16	5.2 B	17.0
HARD tan CLAY LOAM	1034.90		6 9 13	5.4 B	16.0
HARD tan CLAY LOAM with LIMESTONE fragments	1032.40	-10	6 11 11	4.5 P	15.0
HARD gray CLAY LOAM	1029.90		9 12 17	4.1 S	17.0
HARD gray SHALE Auger Refusal @ 16'	1027.40	-15	15 12 34	5.8 S	17.0
End of Boring		-20			

The Unconfined Compressive Strength (UCS) Failure Mode is indicated by (B-Bulge, S-Shear, P-Penetrometer)
The SPT (N value) is the sum of the last two blow values in each sampling zone (AASHTO T206)

BBS, from 137 (Rev. 8-99)

MODEL: Default
FILE NAME: pw:\\rsandh-pw.bentley.com:rsandh-pw01\Documents\Transportation\Projects\130059.000 US 20 Stockton\CADD\CAD Sheets\D264B40-sht-bog14.dgn

RS&H

USER NAME = BlomquiM	DESIGNED - ALM	REVISED -
	DRAWN - ALM	REVISED -
PLOT SCALE = 2.0000 ' / in.	CHECKED - CPK	REVISED -
PLOT DATE = 10/3/2022	DATE - 2/18/2019	REVISED -

STATE OF ILLINOIS
DEPARTMENT OF TRANSPORTATION

BORING LOGS

SCALE: N.T.S. SHEET 14 OF 14 SHEETS STA. TO STA.

F.A.P. RTE.	SECTION	COUNTY	TOTAL SHEETS	SHEET NO.
301	24R	JO DAVIESS	594	306

CONTRACT NO. 64B40
ILLINOIS FED. AID PROJECT

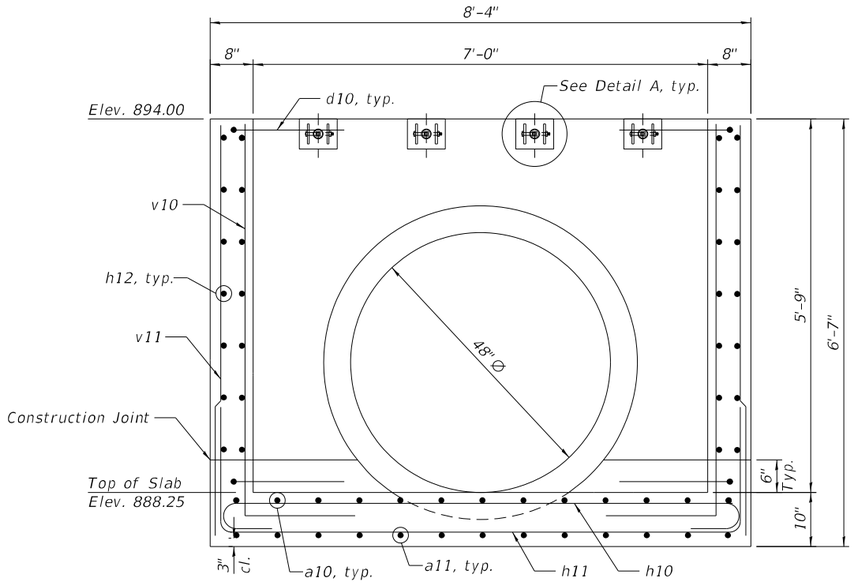

SECTION A-A

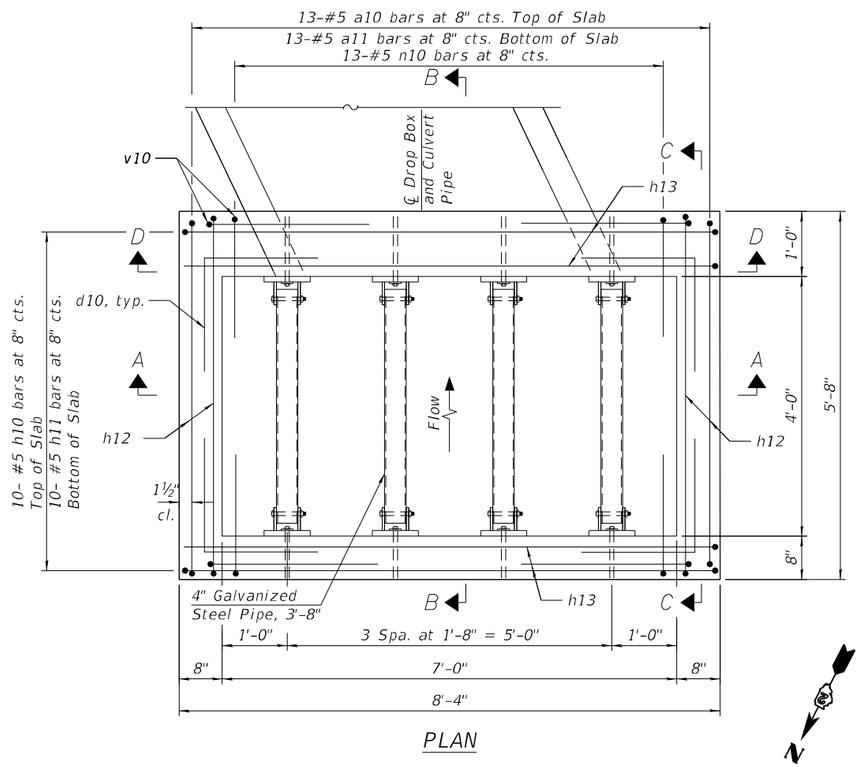

PLAN

GENERAL NOTES

1. Reinforcement bars shall conform to the requirements of ASTM A 706 Gr 60.
2. All exposed concrete edges shall be chamfered ¾" unless otherwise noted.
3. All construction joints shall be bonded.
4. The contract unit price "Each" for Drop Box No. 1 shall include the Concrete Box Culverts, Reinforcement Bars, earth excavation where required, backfilling, compacted CA-7 aggregate bedding material and necessary grading to fit the structure as shown, or to the slope.
5. The contract unit price "Foot" for Traversable Pipe Grate, Special shall include the steel pipe grate system, steel plates, bolts, nuts, washers, anchor rods and all necessary drilling and grouting.
6. Steel pipes shall conform to ASTM A-53 (Type E or S) Grade B, Schedule 40 and shall be galvanized conforming to ASTM A-120.
7. Steel plates shall conform to AASHTO M-183 and shall be galvanized conforming to AASHTO M-111.
8. Bolts, nuts and washer shall be in accordance with Article 1006.08 of the Standard Specifications and shall be galvanized.
9. Contractor shall field verify galvanized pipe length prior to ordering.
10. The minimum distance from the center of a hole to the free edge of a structural shape or plate shall be 1½" unless noted otherwise.
11. Bolts and anchor rods shall be snug tightened by a few impacts of an impact wrench or the full force of a worker using an ordinary spud wrench.
12. This work shall be done according to the applicable portions of Sections 501 thru 503, 505, 508, 540 and 584 of the Standard Specifications.
13. Fabrication of the Steel Pipe Grate System shall conform to the requirements in Section 505 of the Standard Specifications unless noted otherwise.
14. Contractor to confirm that a minimum allowable gross bearing pressure equal to 2000 PSF can be achieved prior to construction of Drop Box structure.
15. Backfilling and future excavations shall be performed equally on all sides of the structure.
16. Anchor rods shall conform to the requirements of ASTM F1554, Grade 105. If the Contractor elects to drill and grout the anchors, they shall be drilled and epoxy-grouted according to the requirements of Section 584 of the Standard Specifications. The chemical adhesive system shall be capable of achieving a minimum proof load of 5,000 pounds and an ultimate shear capacity of 8,000 pounds per anchor.
17. A minimum of 6" of compacted CA-7 aggregate bedding material shall be placed beneath the drop box.

DESIGN STRESSES

FIELD UNITS

f'c = 3,500 psi
fy = 60,000 psi (Reinforcement)

TOTAL BILL OF MATERIAL

ITEM	UNIT	TOTAL
Drop Box No. 1	Each	1
Traversable Pipe Grate, Special	Foot	15

STATE OF ILLINOIS
MOUSSA A. ISSA
081-005738
CHICAGO, ILLINOIS
LICENSED STRUCTURAL ENGINEER

SIGNED Moussa A. Issa
DR. MOUSSA A. ISSA, S.E. IL. LIC. NO. 081-005738
EXPIRES 11-30-2022

DATE 7/8/2022 FOR SHEETS 1 AND 2

PLAN AND ELEVATION
DROP BOX NO. 1
STATION 1986+10.57
OFFSET 72.82 LT

FILE NAME: pw:\\srandh-pw.bentley.com:rsandh-pw-01\Documents\Transportation\Projects\1130059,000 US 20 Stockton\CADStruct\mod\HBM\0431102-0264B40-001-GPE.dgn

HBM ENGINEERING GROUP, LLC

USER NAME = EtzwileE	DESIGNED - MAA, KJD	REVISED -	
	DRAWN - KJD, YA	REVISED -	
PLOT SCALE = 2.3334 ' / in.	CHECKED - MI, MAI	REVISED -	
PLOT DATE = 6/28/2022	DATE - 08-02-2021	REVISED -	

STATE OF ILLINOIS
DEPARTMENT OF TRANSPORTATION

PLAN AND ELEVATION
DROP BOX NO. 1

SHEET NO. 1 OF 2 SHEETS

F.A.P. RTE.	SECTION	COUNTY	TOTAL SHEETS	SHEET NO.
301	24R	JO DAVIESS	594	307

CONTRACT NO. 64B40

ILLINOIS FED. AID PROJECT

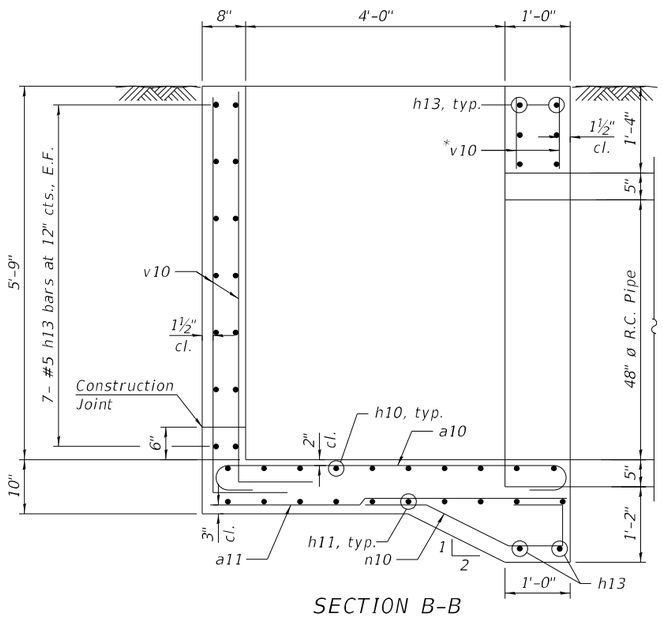

SECTION B-B

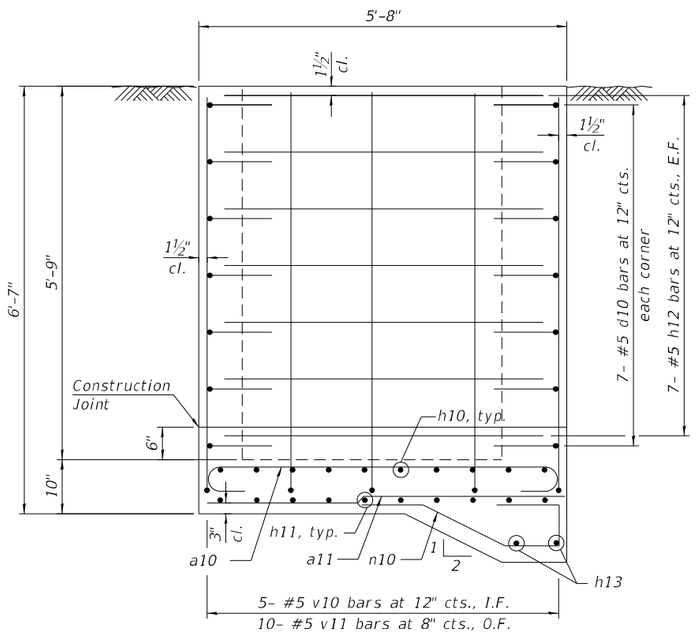

SECTION C-C

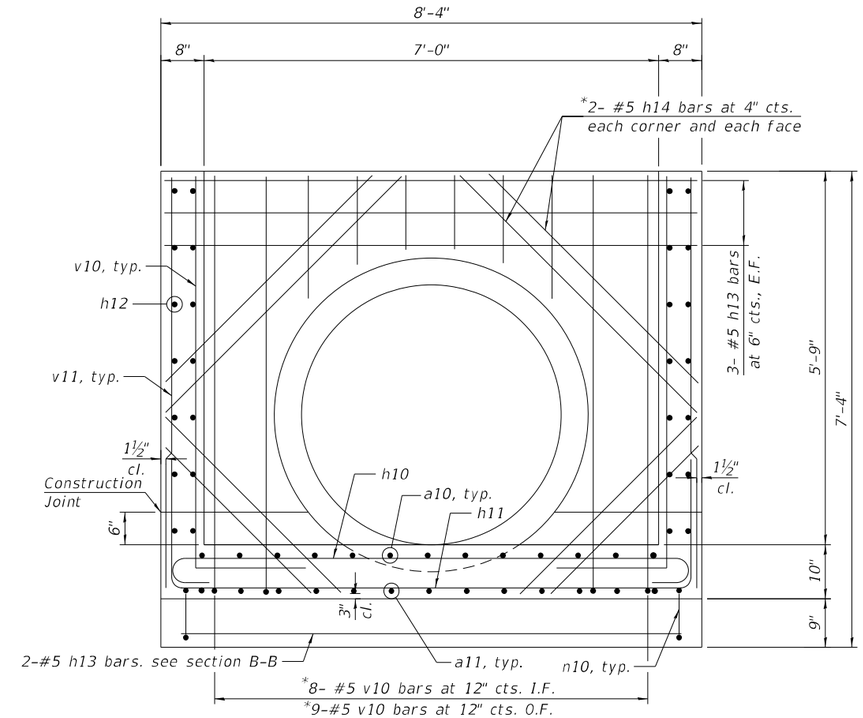

SECTION D-D

* Cut in field to fit

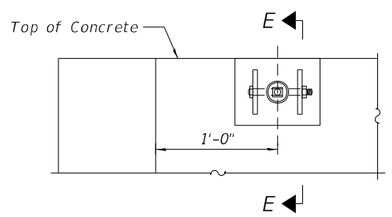

DETAIL A

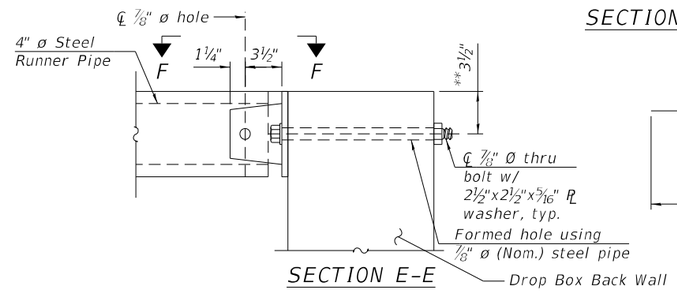

SECTION E-E

**Measured perpendicular to top of wall. In addition, formed hole shall be located at a min. of 6" measured horizontally from any vertical joints necessary for construction of the culvert drop box.

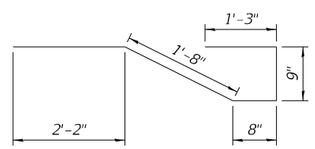

BAR n10

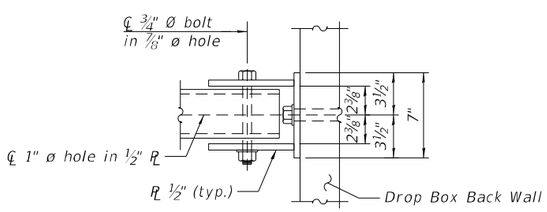

VIEW F-F

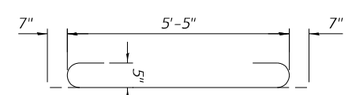

BAR a10

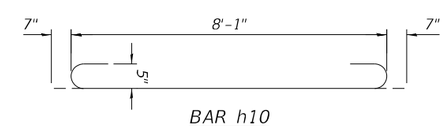

BAR h10

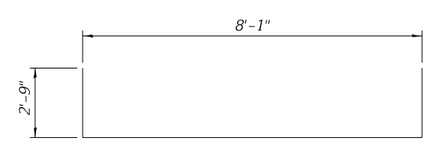

BAR h11

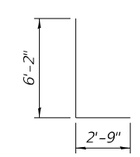

BAR v10

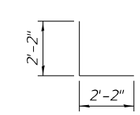

BAR d10

BILL OF MATERIAL

(For Information Only)

	Bar	No.	Size	Length	Shape
	a10	13	#5	6'-7"	
	a11	13	#5	5'-5"	
	d10	28	#5	4'-4"	
	h10	10	#5	9'-3"	
	h11	10	#5	13'-7"	
	h12	28	#5	5'-5"	
	h13	22	#5	8'-1"	
	h14	16	#5	5'-8"	
	n10	13	#5	6'-6"	
	v10	44	#5	8'-11"	
	v11	20	#5	6'-2"	
**	Reinforcement Bars		Pound	1600	
**	Concrete Structures		Cu Yd	5.2	
***	4" Galv. Steel Pipe		4 @	3'-8"	
***	Side Assembly		Each	8	

** Included in Drop Box No.1

*** Included in Traversable Pipe Grate, special with all hardware and steel for Assemblies

FILE NAME: pw:\\hbmdc-pw.bentley.com:csandf-pw-01\Documents\Transportation\Projects\130059.000 US 20 Stockton\CADStructures\HBM-0431102-0264B40-002-Details.dgn

HBM ENGINEERING GROUP, LLC

USER NAME = BlomquiM	DESIGNED - MAA, KJD	REVISED -	
	DRAWN - KJD, MAA	REVISED -	
PLOT SCALE = 2.3333 ' / in.	CHECKED - MI, MAI	REVISED -	
PLOT DATE = 10/3/2022	DATE - 08-02-2021	REVISED -	

STATE OF ILLINOIS
DEPARTMENT OF TRANSPORTATION

CULVERT DROP BOX DETAILS
DROP BOX NO. 1

SHEET NO. 2 OF 2 SHEETS

F.A.P. RTE.	SECTION	COUNTY	TOTAL SHEETS	SHEET NO.
301	24R	JO DAVIESS	594	308
		CONTRACT NO. 64B40		
		ILLINOIS	FED. AID PROJECT	

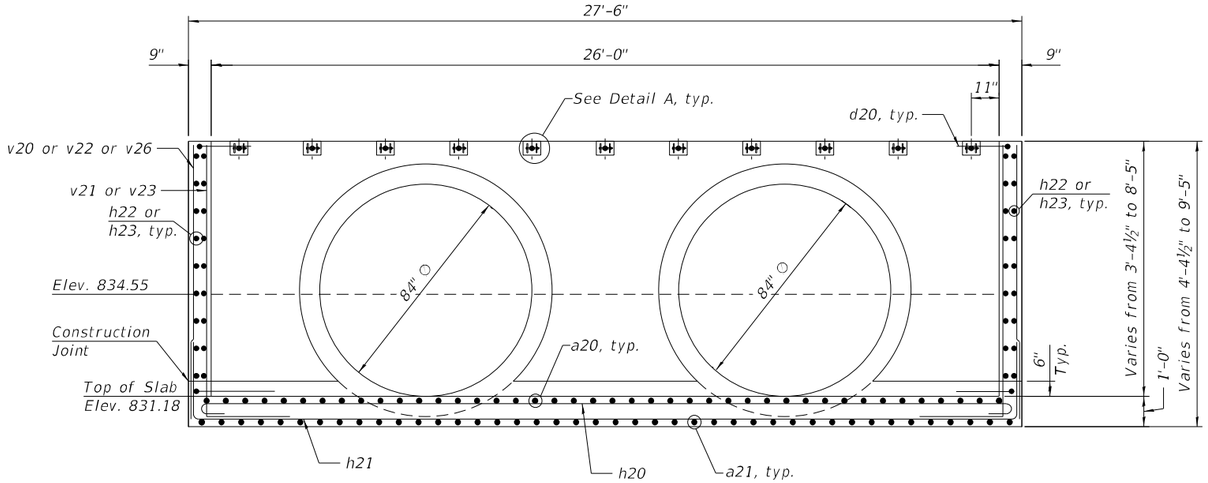

SECTION A-A

* Cut in field to fit

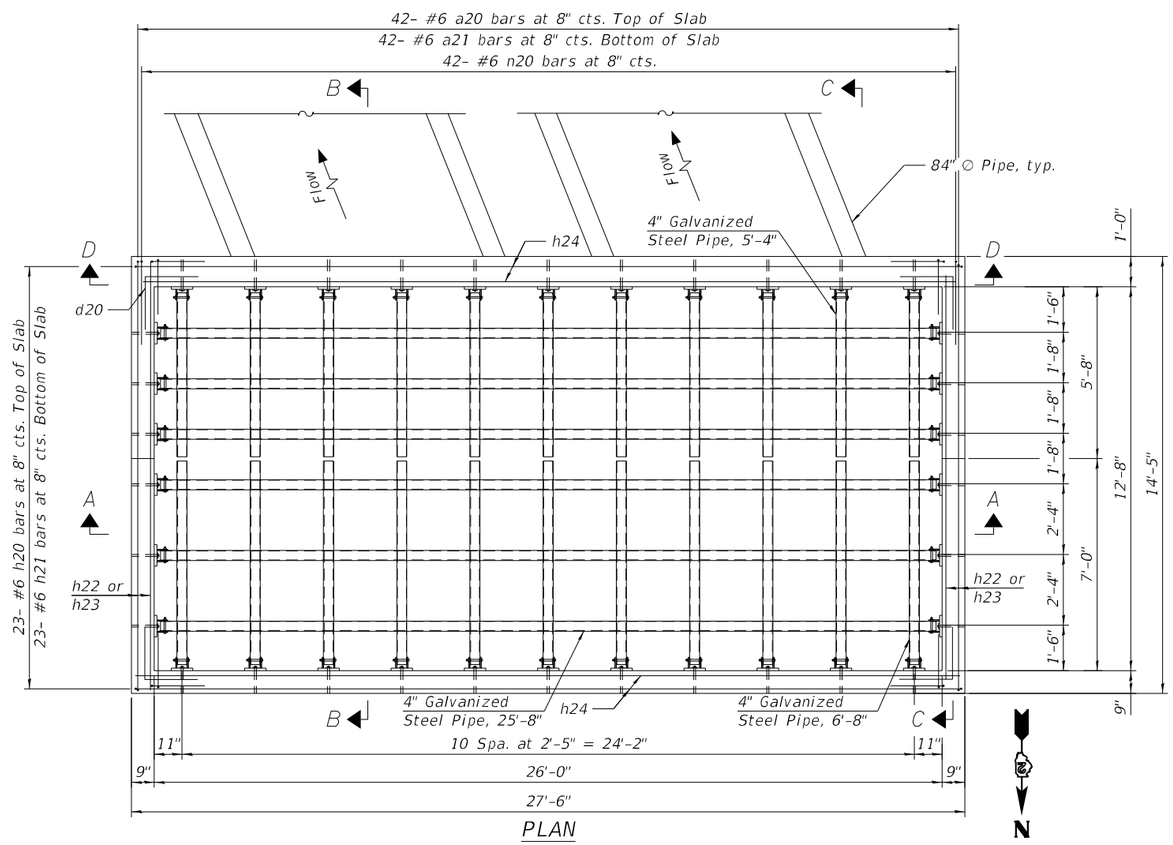

PLAN

GENERAL NOTES

1. Reinforcement bars shall conform to the requirements of ASTM A 706 Gr 60.
2. All exposed concrete edges shall be chamfered ¾" unless otherwise noted.
3. All construction joints shall be bonded.
4. The contract unit price "Each" for Drop Box No. 1 shall include the Concrete Box Culverts, Reinforcement Bars, earth excavation where required, backfilling, compacted CA-7 aggregate bedding material and necessary grading to fit the structure as shown, or to the slope.
5. The contract unit price "Foot" for Traversable Pipe Grate, Special shall include the steel pipe grate system, steel plates, bolts, nuts, washers, anchor rods and all necessary drilling and grouting.
6. Steel pipes shall conform to ASTM A-53 (Type E or S) Grade B, Schedule 40 and shall be galvanized conforming to ASTM A-120.
7. Steel plates shall conform to AASHTO M-183 and shall be galvanized conforming to AASHTO M-111.
8. Bolts, nuts and washer shall be in accordance with Article 1006.08 of the Standard Specifications and shall be galvanized.
9. Contractor shall field verify galvanized pipe length prior to ordering.
10. The minimum distance from the center of a hole to the free edge of a structural shape or plate shall be 1½" unless noted otherwise.
11. Bolts and anchor rods shall be snug tightened by a few impacts of an impact wrench or the full force of a worker using an ordinary spud wrench.
12. This work shall be done according to the applicable portions of Sections 501 thru 503, 505, 508, 540 and 584 of the Standard Specifications.
13. Fabrication of the Steel Pipe Grate System shall conform to the requirements in Section 505 of the Standard Specifications unless noted otherwise.
14. Contractor to confirm that a minimum allowable gross bearing pressure equal to 2000 PSF can be achieved prior to construction of Drop Box structure.
15. Backfilling and future excavations shall be performed equally on all sides of the structure.
16. Anchor rods shall conform to the requirements of ASTM F1554, Grade 105. If the Contractor elects to drill and grout the anchors, they shall be drilled and epoxy-grouted according to the requirements of Section 584 of the Standard Specifications. The chemical adhesive system shall be capable of achieving a minimum proof load of 5,000 pounds and an ultimate shear capacity of 8,000 pounds per anchor.
17. A minimum of 6" of compacted CA-7 aggregate bedding material shall be placed beneath the drop box.

DESIGN STRESSES

FIELD UNITS

f'c = 3,500 psi
fy = 60,000 psi (Reinforcement)

TOTAL BILL OF MATERIAL

ITEM	UNIT	TOTAL
Drop Box No. 2	Each	1
Traversable Pipe Grate, Special	Foot	287

STATE OF ILLINOIS
MOUSSA A. ISSA
081-005738
CHICAGO, ILLINOIS
LICENSED STRUCTURAL ENGINEER

SIGNED Moussa A. Issa
DR. MOUSSA A. ISSA, S.E. IL. LIC. NO. 081-005738
EXPIRES 11-30-2022

DATE 7/8/2022 FOR SHEETS 1 AND 2

PLAN AND ELEVATION
DROP BOX NO. 2
STATION 2003+82.02
OFFSET 106.02 LT

FILE NAME: pw:\\vesdhcw.bentley.com:ssandh-pw01\Documents\Transportation\Projects\113059_000_US 20 Stockton\C4D\Structures\HBM\043110342\64B40-001-GPF.dgn

HBM ENGINEERING GROUP, LLC

USER NAME = EtzwilleE	DESIGNED - MAA, KJD	REVISED -	
	DRAWN - KJD, AI	REVISED -	
PLOT SCALE = 5.0000 ' / in.	CHECKED - MI, MAI	REVISED -	
PLOT DATE = 7/7/2022	DATE - 08-02-2021	REVISED -	

STATE OF ILLINOIS
DEPARTMENT OF TRANSPORTATION

PLAN AND ELEVATION
DROP BOX NO. 2

SHEET NO. 1 OF 2 SHEETS

F.A.P. RTE.	SECTION	COUNTY	TOTAL SHEETS	SHEET NO.
301	24R	JO DAVIESS	594	309
		CONTRACT NO. 64B40		
	ILLINOIS	FED. AID PROJECT		

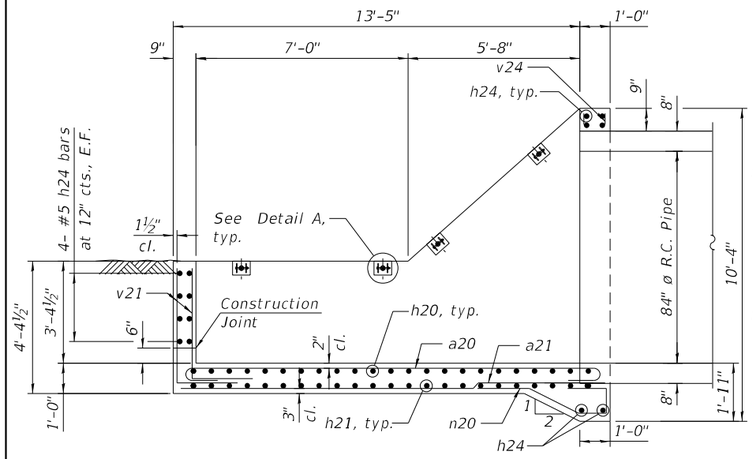

SECTION B-B

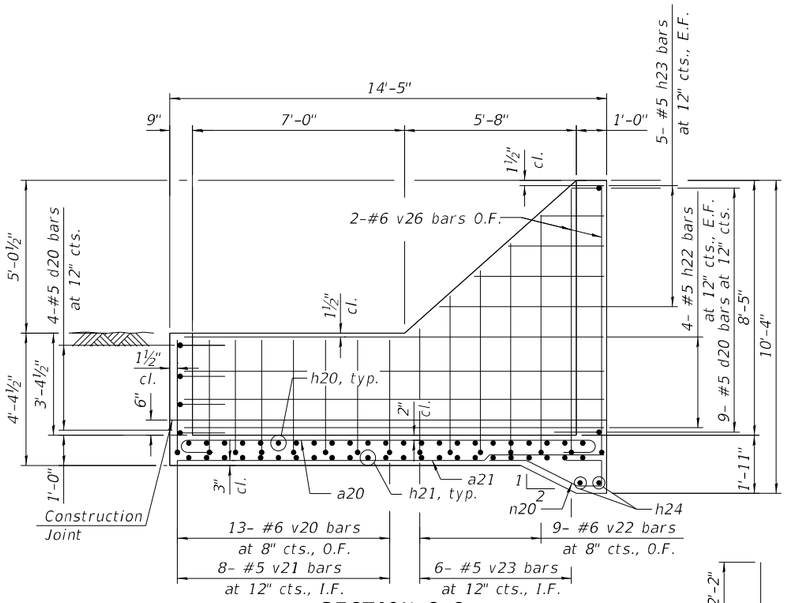

SECTION C-C

* Cut in field to fit

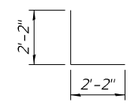

BAR d20

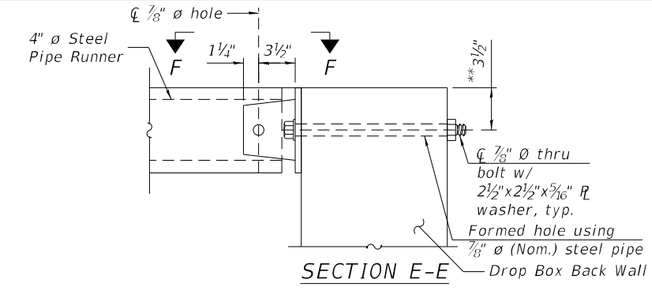

SECTION E-E

** Measured perpendicular to top of wall. In addition, formed hole shall be located at a min. of 6" measured horizontally from any vertical joints necessary for construction of the culvert drop box.

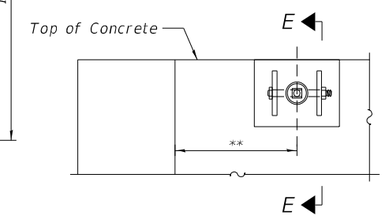

DETAIL A

** See Plan view for placement detail

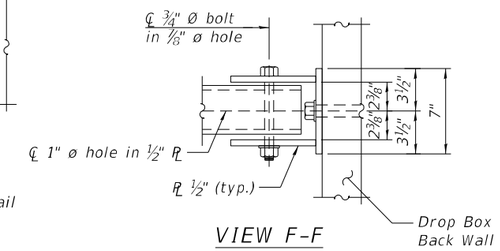

VIEW F-F

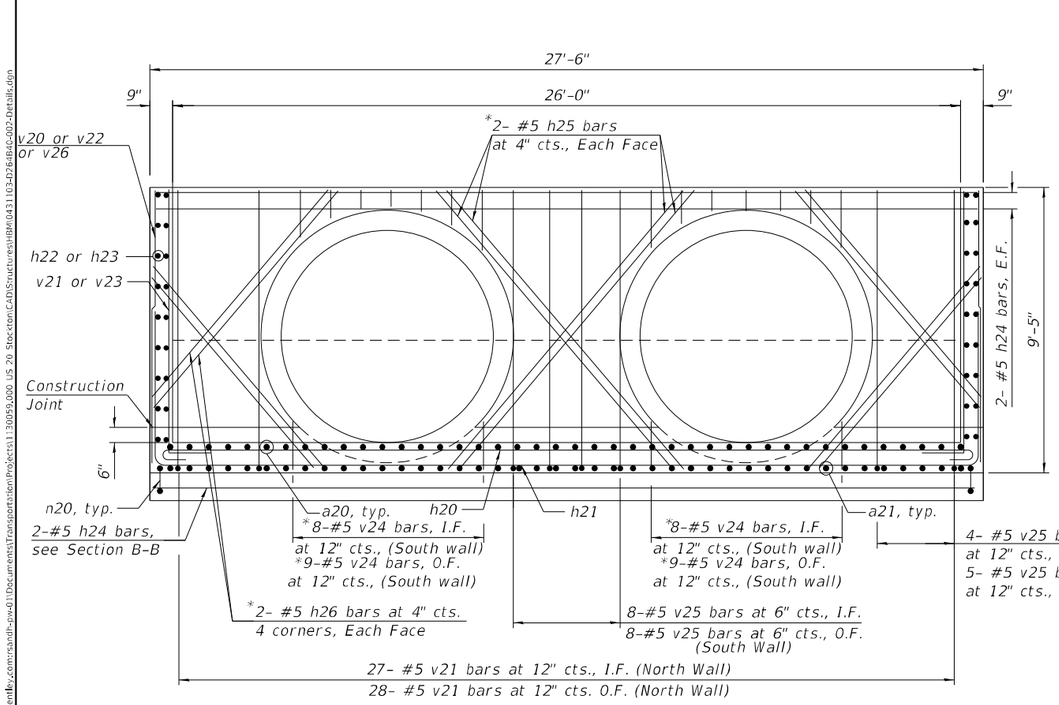

SECTION D-D

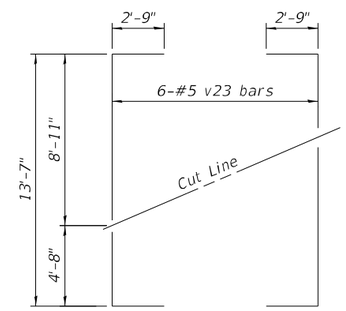

BARS v23

Ordre bars full length. Cut as shown and use remainder of bars in opposit face

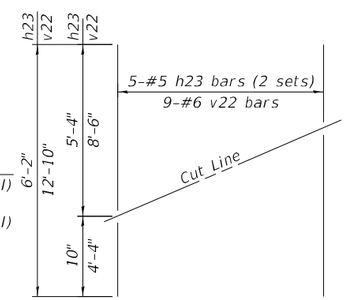

BARS h23 & v22

Ordre bars full length. Cut as shown and use remainder of bars in opposit face

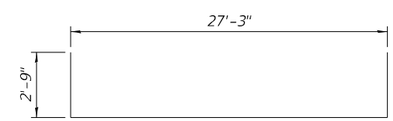

BAR h21

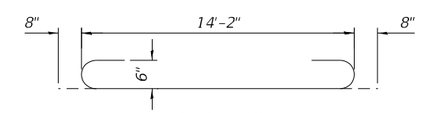

BAR a20

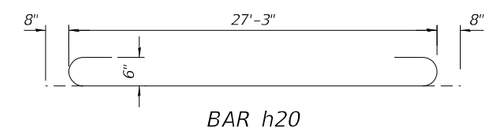

BAR h20

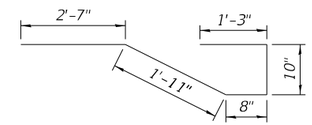

BAR n20

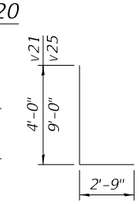

BARS v21 & v25

BILL OF MATERIAL

(For Information Only)

	Bar	No.	Size	Length	Shape
	a20	42	#6	15'-6"	
	a21	42	#6	14'-2"	
	d20	26	#5	4'-4"	
	h20	23	#6	28'-7"	
	h21	23	#6	32'-9"	
	h22	16	#6	14'-2"	
	h23	10	#5	6'-2"	
	h24	14	#5	27'-3"	
	h25	8	#5	11'-10"	
	h26	16	#5	9'-5"	
	n20	42	#6	7'-3"	
	v20	26	#6	4'-0"	
	v21	71	#6	6'-9"	
	v22	9	#5	12'-10"	
	v23	6	#5	19'-1"	
	v24	34	#5	3'-2"	
	v25	34	#5	11'-9"	
	v26	4	#6	9'-1"	
**	Reinforcement Bars			Pound	7060
**	Concrete Structures			Cu Yd	26.4
***	4" Galv. Steel Pipe			6 @	25'-8"
***	4" Galv. Steel Pipe			11 @	6'-8"
***	4" Galv. Steel Pipe			11 @	5'-4"
***	Side Assembly			Each	34

** Included in Drop Box No. 2

*** Included in Traversable Pipe Grate, Special with all hardware and steel for Assemblies

FILE NAME: pw:\\hbc-sh-pw.bentley.com:sandf-pw-01\Documents\Transportation\Projects\1130059.000_US_20_Stockton\CAD\Structures\HBM\0431103-D26-B4C-002-Details.dgn

HBM ENGINEERING GROUP, LLC

USER NAME = BlomquiM	DESIGNED - MAA, KJD	REVISED -	
	DRAWN - KJD, AI	REVISED -	
PLOT SCALE = 5.0000 ' / in.	CHECKED - MI, MAI	REVISED -	
PLOT DATE = 10/3/2022	DATE - 08-02-2021	REVISED -	

STATE OF ILLINOIS
DEPARTMENT OF TRANSPORTATION

CULVERT DROP BOX DETAILS
DROP BOX NO. 2

SHEET NO. 2 OF 2 SHEETS

F.A.P. RTE.	SECTION	COUNTY	TOTAL SHEETS	SHEET NO.
301	24R	JO DAVIESS	594	310

CONTRACT NO. 64B40

ILLINOIS | FED. AID PROJECT

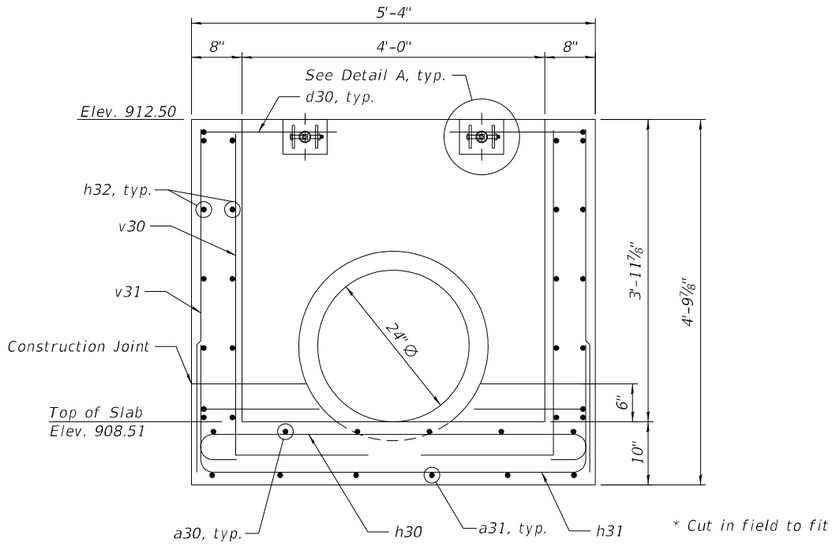

SECTION A-A

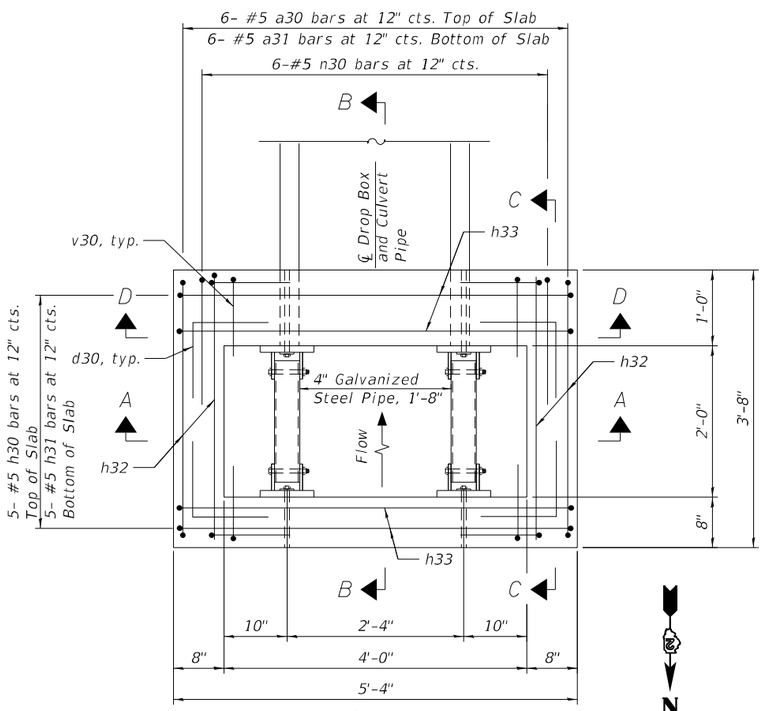

PLAN

GENERAL NOTES

1. Reinforcement bars shall conform to the requirements of ASTM A 706 Gr 60.
2. All exposed concrete edges shall be chamfered ¾" unless otherwise noted.
3. All construction joints shall be bonded.
4. The contract unit price "Each" for Drop Box No. 1 shall include the Concrete Box Culverts, Reinforcement Bars, earth excavation where required, backfilling, compacted CA-7 aggregate bedding material and necessary grading to fit the structure as shown, or to the slope.
5. The contract unit price "Foot" for Traversable Pipe Grate, Special shall include the steel pipe grate system, steel plates, bolts, nuts, washers, anchor rods and all necessary drilling and grouting.
6. Steel pipes shall conform to ASTM A-53 (Type E or S) Grade B, Schedule 40 and shall be galvanized conforming to ASTM A-120.
7. Steel plates shall conform to AASHTO M-183 and shall be galvanized conforming to AASHTO M-111.
8. Bolts, nuts and washer shall be in accordance with Article 1006.08 of the Standard Specifications and shall be galvanized.
9. Contractor shall field verify galvanized pipe length prior to ordering.
10. The minimum distance from the center of a hole to the free edge of a structural shape or plate shall be 1½" unless noted otherwise.
11. Bolts and anchor rods shall be snug tightened by a few impacts of an impact wrench or the full force of a worker using an ordinary spud wrench.
12. This work shall be done according to the applicable portions of Sections 501 thru 503, 505, 508, 540 and 584 of the Standard Specifications.
13. Fabrication of the Steel Pipe Grate System shall conform to the requirements in Section 505 of the Standard Specifications unless noted otherwise.
14. Contractor to confirm that a minimum allowable gross bearing pressure equal to 2000 PSF can be achieved prior to construction of Drop Box structure.
15. Backfilling and future excavations shall be performed equally on all sides of the structure.
16. Anchor rods shall conform to the requirements of ASTM F1554, Grade 105. If the Contractor elects to drill and grout the anchors, they shall be drilled and epoxy-grouted according to the requirements of Section 584 of the Standard Specifications. The chemical adhesive system shall be capable of achieving a minimum proof load of 5,000 pounds and an ultimate shear capacity of 8,000 pounds per anchor.
17. A minimum of 6" of compacted CA-7 aggregate bedding material shall be placed beneath the drop box.

DESIGN STRESSES

FIELD UNITS

f'c = 3,500 psi
fy = 60,000 psi (Reinforcement)

TOTAL BILL OF MATERIAL

ITEM	UNIT	TOTAL
Drop Box No. 3	Each	1
Traversable Pipe Grate, Special	Foot	4

STATE OF ILLINOIS
MOUSSA A. ISSA
081-005738
CHICAGO, ILLINOIS
LICENSED STRUCTURAL ENGINEER

SIGNED Moussa A. Issa
DR. MOUSSA A. ISSA, S.E. IL. LIC. NO. 081-005738
EXPIRES 11-30-2022

DATE 7/8/2022 FOR SHEETS 1 AND 2

PLAN AND ELEVATION
DROP BOX NO. 3
STATION 2043+04.50
OFFSET 37.97 LT

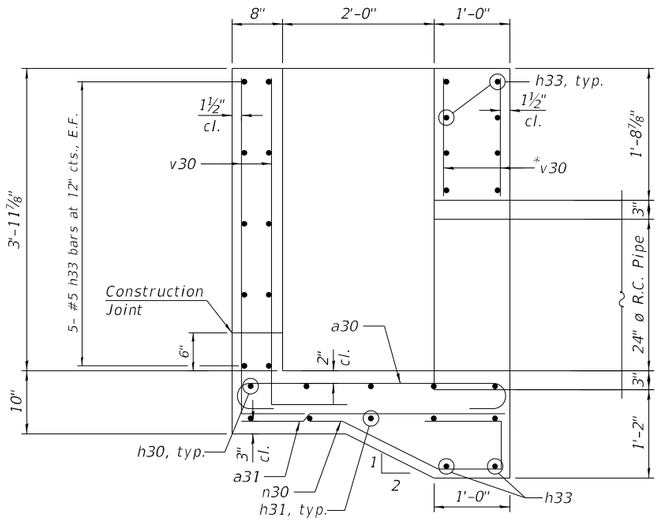

SECTION B-B

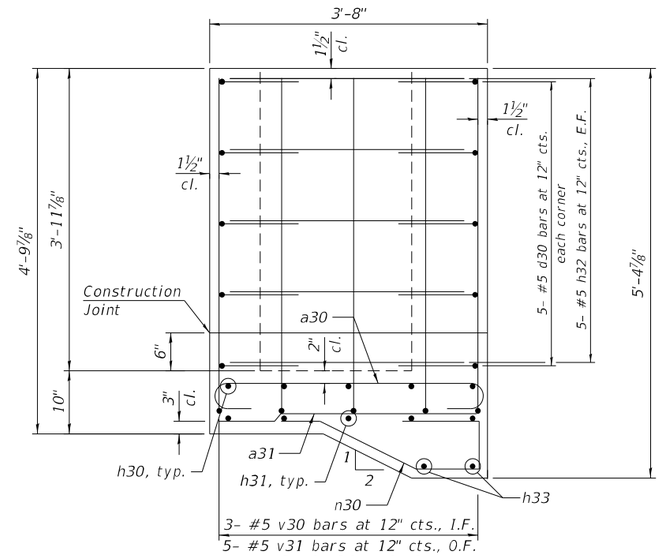

SECTION C-C

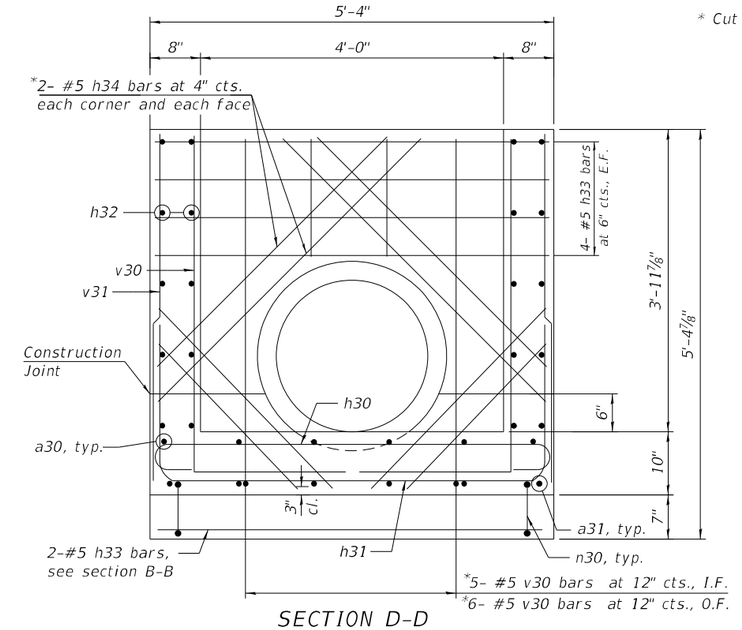

SECTION D-D

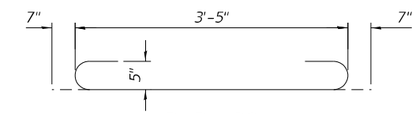

BAR a30

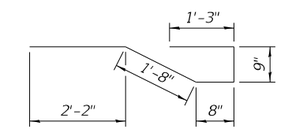

BAR n30

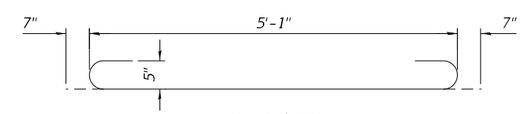

BAR h30

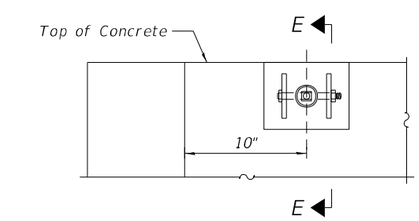

DETAIL A

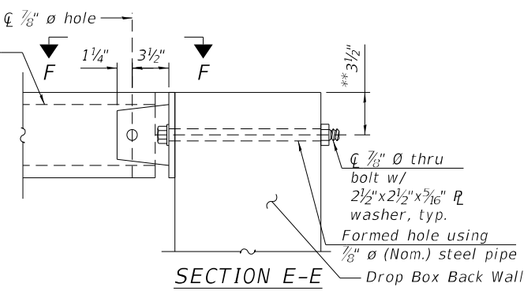

SECTION E-E

**Measured perpendicular to top of wall. In addition, formed hole shall be located at a min. of 6" measured horizontally from any vertical joints necessary for construction of the culvert drop box.

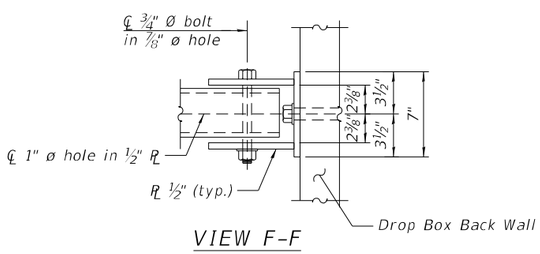

VIEW F-F

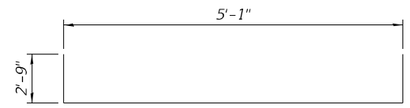

BAR h31

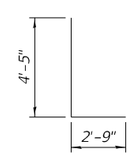

BAR v30

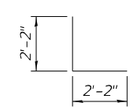

BAR d30

BILL OF MATERIAL

(For Information Only)

Bar	No.	Size	Length	Shape
a30	6	#5	4'-7"	
a31	6	#5	3'-5"	
d30	20	#5	4'-4"	
h30	5	#5	6'-3"	
h31	5	#5	10'-7"	
h32	20	#5	3'-5"	
h33	20	#5	5'-1"	
h34	16	#5	4'-10"	
n30	6	#5	6'-6"	
v30	28	#5	7'-2"	
v31	10	#5	4'-5"	
** Reinforcement Bars			Pound	790
** Concrete Structures			Cu Yd	2.3
*** 4" Galv. Steel Pipe			2 @	1'-8"
*** Side Assembly			Each	4

** Included in Drop Box No. 3

*** Included in Traversable Pipe Grate, Special with all hardware and steel for Assemblies

FILE NAME: pw:\\hbmdfs-pw.bentley.com:hbmdf-pw01\Documents\Transportation\Projects\13059,000 US 20 Stockton\CADStructures\HBM\0431104D2B4B4C-002-Details.dgn

HBM ENGINEERING GROUP, LLC

USER NAME = BlomquiM	DESIGNED - MAA, KJD	REVISED -	
	DRAWN - MAA, KJD	REVISED -	
PLOT SCALE = 2.0000 ' / in.	CHECKED - MI	REVISED -	
PLOT DATE = 10/3/2022	DATE - 08-02-2021	REVISED -	

STATE OF ILLINOIS
DEPARTMENT OF TRANSPORTATION

CULVERT DROP BOX DETAILS
DROP BOX NO. 3

SHEET NO. 2 OF 2 SHEETS

F.A.P. RTE.	SECTION	COUNTY	TOTAL SHEETS	SHEET NO.
301	24R	JO DAVIESS	594	312

CONTRACT NO. 64B40

ILLINOIS | FED. AID PROJECT

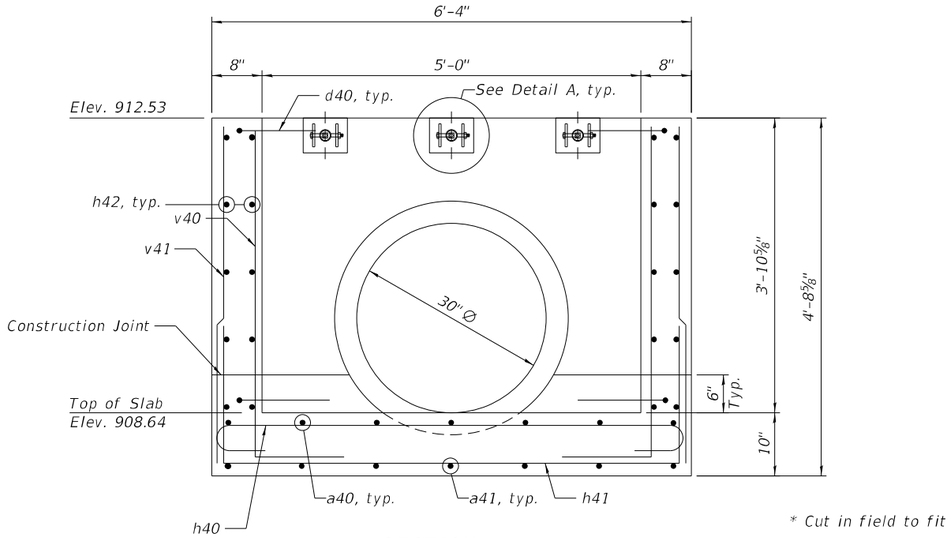

* Cut in field to fit

SECTION A-A

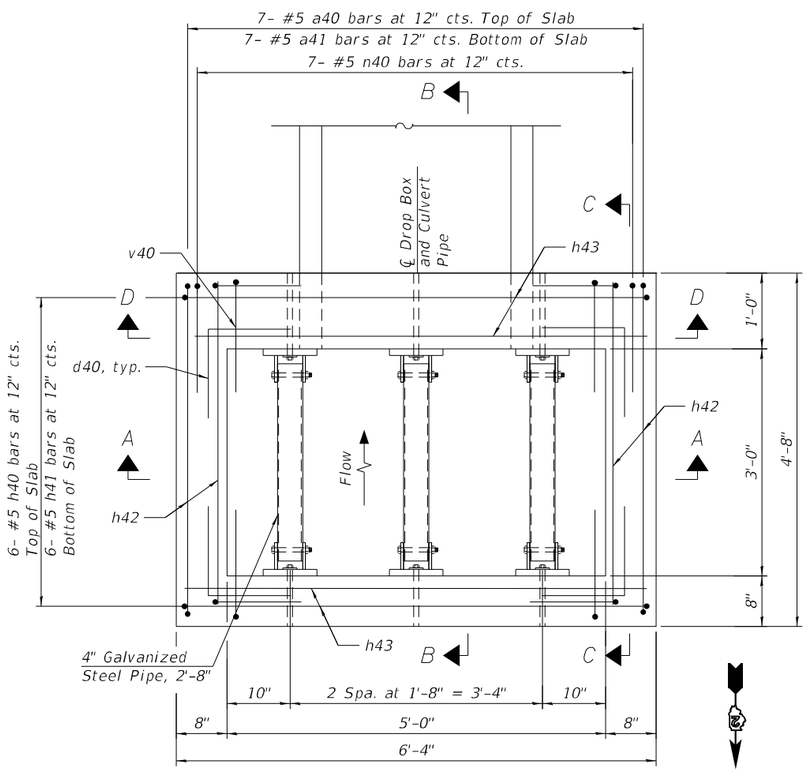

PLAN

GENERAL NOTES

1. Reinforcement bars shall conform to the requirements of ASTM A 706 Gr 60.
2. All exposed concrete edges shall be chamfered ¾" unless otherwise noted.
3. All construction joints shall be bonded.
4. The contract unit price "Each" for Drop Box No. 1 shall include the Concrete Box Culverts, Reinforcement Bars, earth excavation where required, backfilling, compacted CA-7 aggregate bedding material and necessary grading to fit the structure as shown, or to the slope.
5. The contract unit price "Foot" for Traversable Pipe Grate, Special shall include the steel pipe grate system, steel plates, bolts, nuts, washers, anchor rods and all necessary drilling and grouting.
6. Steel pipes shall conform to ASTM A-53 (Type E or S) Grade B, Schedule 40 and shall be galvanized conforming to ASTM A-120.
7. Steel plates shall conform to AASHTO M-183 and shall be galvanized conforming to AASHTO M-111.
8. Bolts, nuts and washer shall be in accordance with Article 1006.08 of the Standard Specifications and shall be galvanized.
9. Contractor shall field verify galvanized pipe length prior to ordering.
10. The minimum distance from the center of a hole to the free edge of a structural shape or plate shall be 1½" unless noted otherwise.
11. Bolts and anchor rods shall be snug tightened by a few impacts of an impact wrench or the full force of a worker using an ordinary spud wrench.
12. This work shall be done according to the applicable portions of Sections 501 thru 503, 505, 508, 540 and 584 of the Standard Specifications.
13. Fabrication of the Steel Pipe Grate System shall conform to the requirements in Section 505 of the Standard Specifications unless noted otherwise.
14. Contractor to confirm that a minimum allowable gross bearing pressure equal to 2000 PSF can be achieved prior to construction of Drop Box structure.
15. Backfilling and future excavations shall be performed equally on all sides of the structure.
16. Anchor rods shall conform to the requirements of ASTM F1554, Grade 105. If the Contractor elects to drill and grout the anchors, they shall be drilled and epoxy-grouted according to the requirements of Section 584 of the Standard Specifications. The chemical adhesive system shall be capable of achieving a minimum proof load of 5,000 pounds and an ultimate shear capacity of 8,000 pounds per anchor.
17. A minimum of 6" of compacted CA-7 aggregate bedding material shall be placed beneath the drop box.

DESIGN STRESSES

FIELD UNITS

f'c = 3,500 psi
fy = 60,000 psi (Reinforcement)

TOTAL BILL OF MATERIAL

ITEM	UNIT	TOTAL
Drop Box No. 4	Each	1
Traversable Pipe Grate, Special	Foot	9

STATE OF ILLINOIS
MOUSSA A. ISSA
081-005738
CHICAGO, ILLINOIS
LICENSED STRUCTURAL ENGINEER

SIGNED Moussa A. Issa
DR. MOUSSA A. ISSA, S.E. IL. LIC. NO. 081-005738
EXPIRES 11-30-2022

DATE 7/8/2022 FOR SHEETS 1 AND 2

PLAN AND ELEVATION
DROP BOX NO. 4
STATION 2048+03.84
OFFSET 36.69 LT

HBM ENGINEERING GROUP, LLC

USER NAME = ElzwilleE	DESIGNED - MAA, KJD	REVISED -	
	DRAWN - KJD, MS	REVISED -	
PLOT SCALE = 2.0000 ' / in.	CHECKED - MI, MAI	REVISED -	
PLOT DATE = 6/28/2022	DATE - 08-02-2021	REVISED -	

STATE OF ILLINOIS
DEPARTMENT OF TRANSPORTATION

PLAN AND ELEVATION
DROP BOX NO. 4

SHEET NO. 1 OF 2 SHEETS

F.A.P. RTE.	SECTION	COUNTY	TOTAL SHEETS	SHEET NO.
301	24R	JO DAVIESS	594	313
		CONTRACT NO. 64B40		
		ILLINOIS	FED. AID PROJECT	

FILE NAME: pw:\\vsngh-pw.bentley.com:ns and1-pw4\Documents\Transportation\Projects\113005,000_US 20 Stockton\CAD\Structures\HBM\0431103-D264B40-001-GPE.dgn

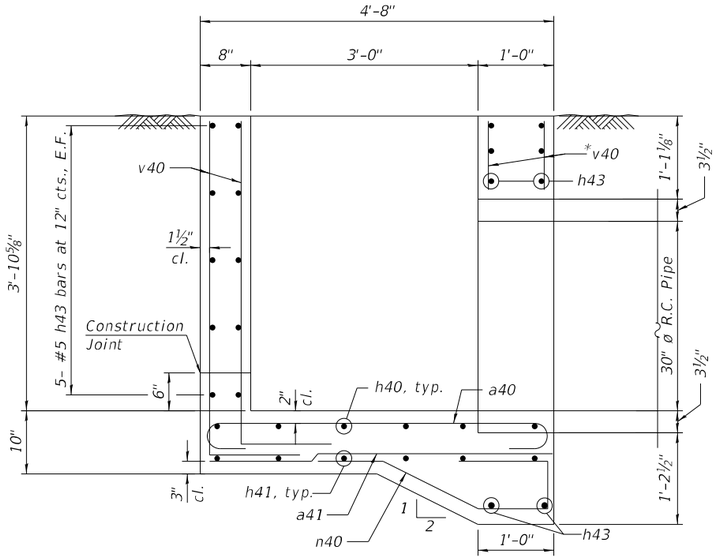

SECTION B-B

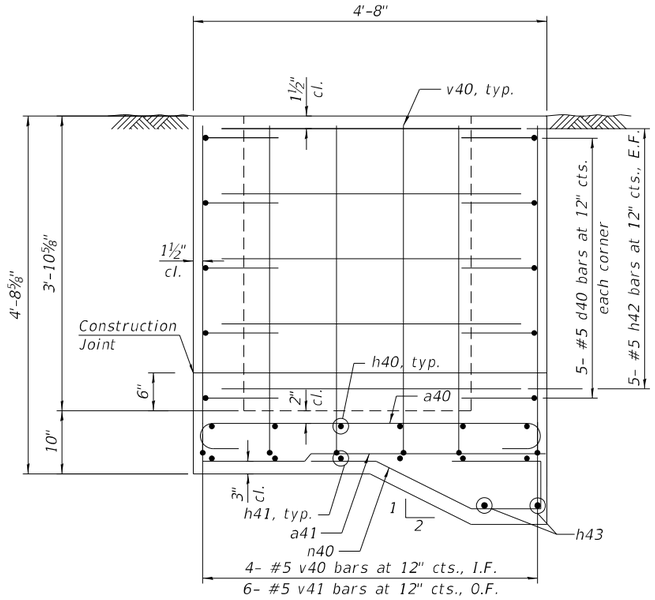

SECTION C-C

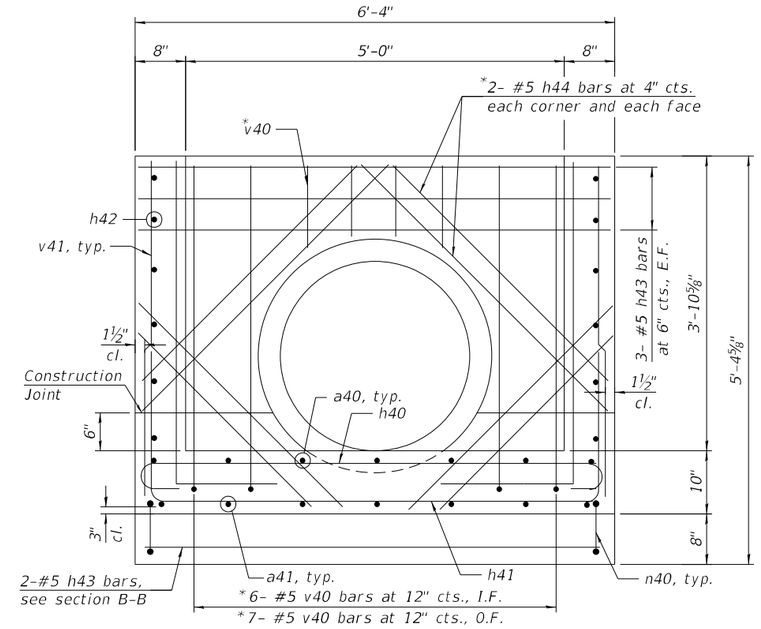

SECTION D-D

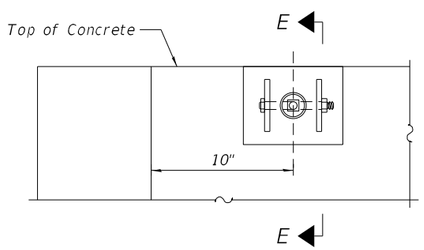

DETAIL A

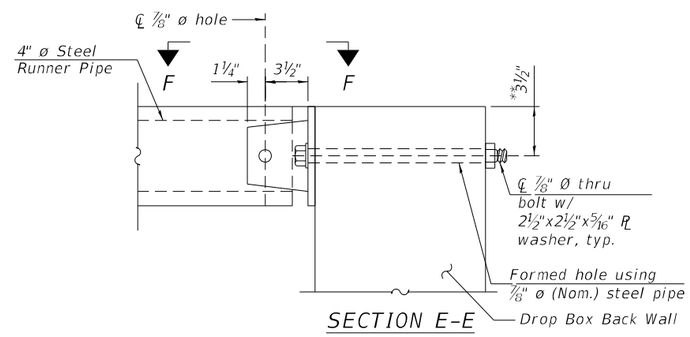

SECTION E-E

**Measured perpendicular to top of wall. In addition, formed hole shall be located at a min. of 6" measured horizontally from any vertical joints necessary for construction of the culvert drop box.

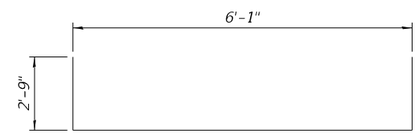

BAR h41

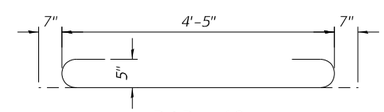

BAR a40

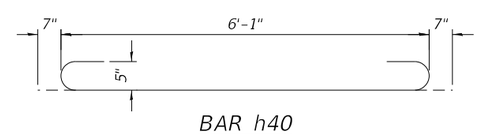

BAR h40

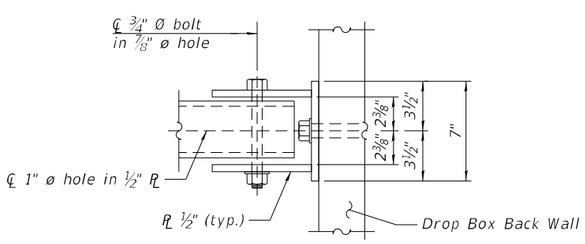

VIEW F-F

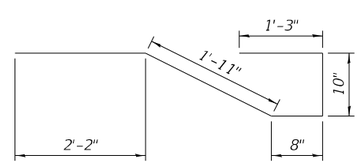

BAR n40

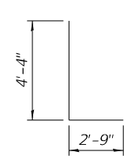

BAR v40

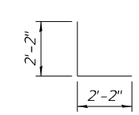

BAR d40

* Cut in field to fit

BILL OF MATERIAL

(For Information Only)

Bar	No.	Size	Length	Shape
a40	7	#5	5'-7"	
a41	7	#5	4'-5"	
d40	20	#5	4'-4"	
h40	6	#5	7'-3"	
h41	6	#5	11'-7"	
h42	20	#5	4'-5"	
h43	18	#5	6'-1"	
h44	16	#5	4'-7"	
n40	7	#5	6'-10"	
v40	34	#5	7'-1"	
v41	12	#5	4'-4"	

**	Reinforcement Bars	Pound	920
**	Concrete Structures	Cu Yd	2.9
***	4" Galv. Steel Pipe	3 @	2'-8"
***	Side Assembly	Each	6

** Included in Drop Box No. 4

*** Included in Traversable Pipe Grate, Special with all hardware and steel for Assemblies

FILE NAME: pw:\\hbdh-pw.bentley.com:hbdh-pw-02\Documents\Transportation\Projects\113005,000 US 20 Stockton CAD\Structures\HBM\0431103-D26HBAC-002-Details.dgn

HBM ENGINEERING GROUP, LLC

USER NAME = BlomquiM	DESIGNED - MAA, KJD	REVISED -	
	DRAWN - KJD, MS	REVISED -	
PLOT SCALE = 2.0000 ' / in.	CHECKED - MI, MAI	REVISED -	
PLOT DATE = 10/3/2022	DATE - 08-02-2021	REVISED -	

STATE OF ILLINOIS
DEPARTMENT OF TRANSPORTATION

CULVERT DROP BOX DETAILS
DROP BOX NO. 4

SHEET NO. 2 OF 2 SHEETS

F.A.P. RTE.	SECTION	COUNTY	TOTAL SHEETS	SHEET NO.
301	24R	JO DAVIESS	594	314
		CONTRACT NO. 64B40		
		ILLINOIS FED. AID PROJECT		

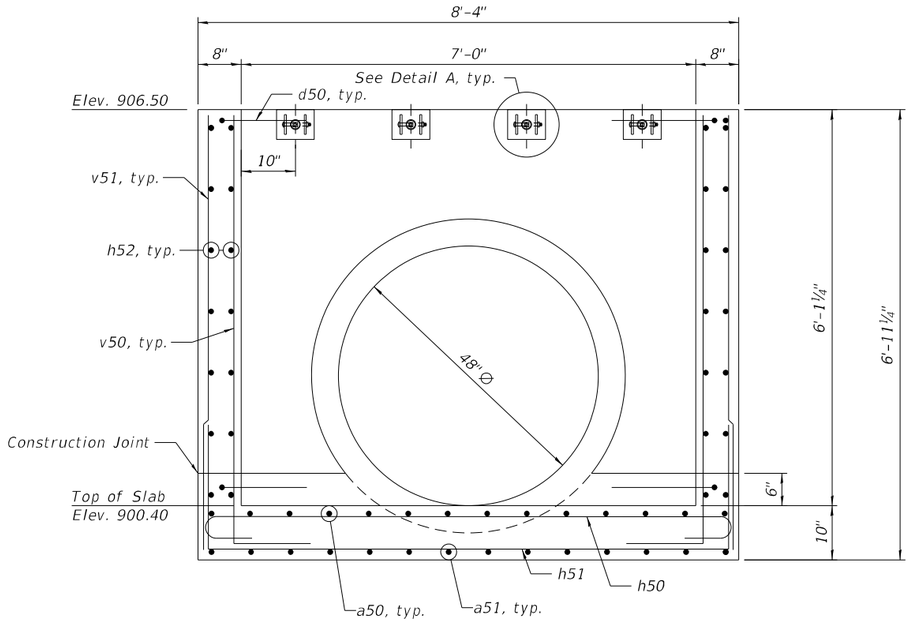

SECTION A-A

* Cut in field to fit

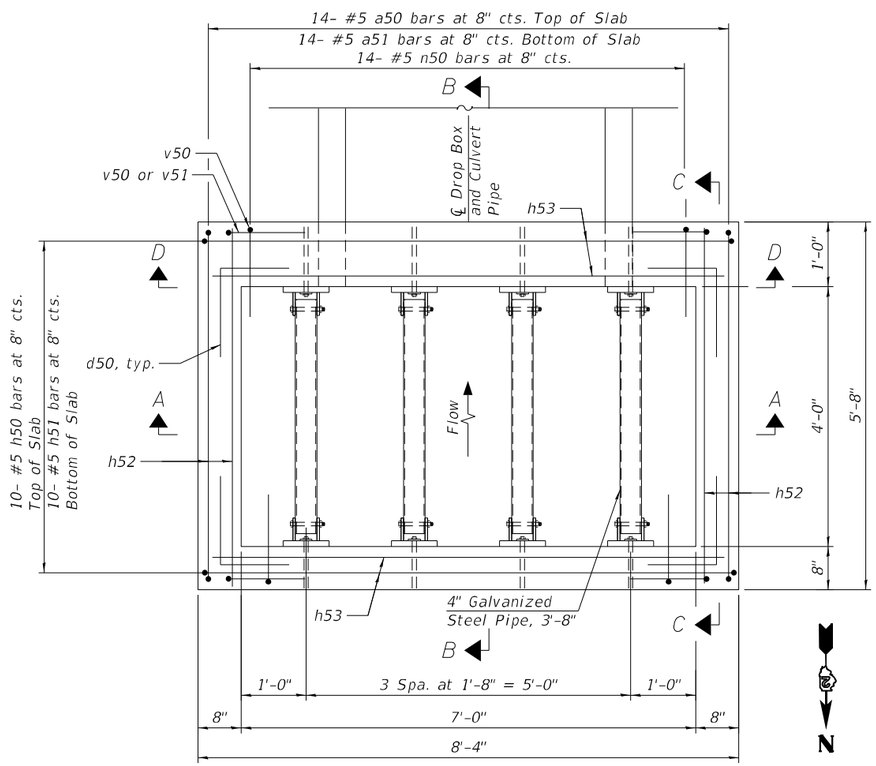

PLAN

NOTES:

1. Contractor to core field tile connection into drop box if field tiles are found during construction

GENERAL NOTES

1. Reinforcement bars shall conform to the requirements of ASTM A 706 Gr 60.
2. All exposed concrete edges shall be chamfered ¾" unless otherwise noted.
3. All construction joints shall be bonded.
4. The contract unit price "Each" for Drop Box No. 1 shall include the Concrete Box Culverts, Reinforcement Bars, earth excavation where required, backfilling, compacted CA-7 aggregate bedding material and necessary grading to fit the structure as shown, or to the slope.
5. The contract unit price "Foot" for Traversable Pipe Grate, Special shall include the steel pipe grate system, steel plates, bolts, nuts, washers, anchor rods and all necessary drilling and grouting.
6. Steel pipes shall conform to ASTM A-53 (Type E or S) Grade B, Schedule 40 and shall be galvanized conforming to ASTM A-120.
7. Steel plates shall conform to AASHTO M-183 and shall be galvanized conforming to AASHTO M-111.
8. Bolts, nuts and washer shall be in accordance with Article 1006.08 of the Standard Specifications and shall be galvanized.
9. Contractor shall field verify galvanized pipe length prior to ordering.
10. The minimum distance from the center of a hole to the free edge of a structural shape or plate shall be 1½" unless noted otherwise.
11. Bolts and anchor rods shall be snug tightened by a few impacts of an impact wrench or the full force of a worker using an ordinary spud wrench.
12. This work shall be done according to the applicable portions of Sections 501 thru 503, 505, 508, 540 and 584 of the Standard Specifications.
13. Fabrication of the Steel Pipe Grate System shall conform to the requirements in Section 505 of the Standard Specifications unless noted otherwise.
14. Contractor to confirm that a minimum allowable gross bearing pressure equal to 2000 PSF can be achieved prior to construction of Drop Box structure.
15. Backfilling and future excavations shall be performed equally on all sides of the structure.
16. Anchor rods shall conform to the requirements of ASTM F1554, Grade 105. If the Contractor elects to drill and grout the anchors, they shall be drilled and epoxy-grouted according to the requirements of Section 584 of the Standard Specifications. The chemical adhesive system shall be capable of achieving a minimum proof load of 5,000 pounds and an ultimate shear capacity of 8,000 pounds per anchor.
17. A minimum of 6" of compacted CA-7 aggregate bedding material shall be placed beneath the drop box.

DESIGN STRESSES

FIELD UNITS

f'c = 3,500 psi
fy = 60,000 psi (Reinforcement)

TOTAL BILL OF MATERIAL

ITEM	UNIT	TOTAL
Drop Box No. 5	Each	1
Traversable Pipe Grate, Special	Foot	15

STATE OF ILLINOIS
MOUSSA A. ISSA
081-005738
CHICAGO, ILLINOIS
LICENSED STRUCTURAL ENGINEER

SIGNED Moussa A. Issa
DR. MOUSSA A. ISSA, S.E. IL. LIC. NO. 081-005738
EXPIRES 11-30-2022

DATE 7/8/2022 FOR SHEETS 1 AND 2

PLAN AND ELEVATION
DROP BOX NO. 5
STATION 2055+83.72
OFFSET 40.66 LT

FILE NAME: pw:\\ks-ndh-pw.bentley.com:ksandh-pw01\Documents\Transportation\Projects\13059,000 US 20 Stockton\CAD\Structures\HBM043110G-D264B40-001-GPF.dgn

HBM ENGINEERING GROUP, LLC

USER NAME = EtzwilleE	DESIGNED - MAA, KJD	REVISED -	
	DRAWN - AI, KJD	REVISED -	
PLOT SCALE = 2.3333 ' / in.	CHECKED - MI, MAI	REVISED -	
PLOT DATE = 6/28/2022	DATE - 08-02-2021	REVISED -	

STATE OF ILLINOIS
DEPARTMENT OF TRANSPORTATION

PLAN AND ELEVATION
DROP BOX. NO. 5

SHEET NO. 1 OF 2 SHEETS

F.A.P. RTE.	SECTION	COUNTY	TOTAL SHEETS	SHEET NO.
301	24R	JO DAVIESS	594	315
		CONTRACT NO. 64B40		
		ILLINOIS	FED. AID PROJECT	

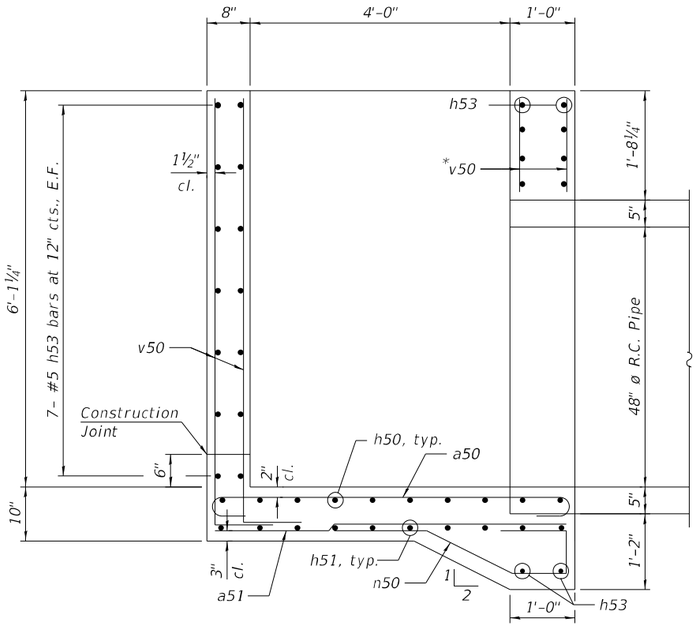

SECTION B-B

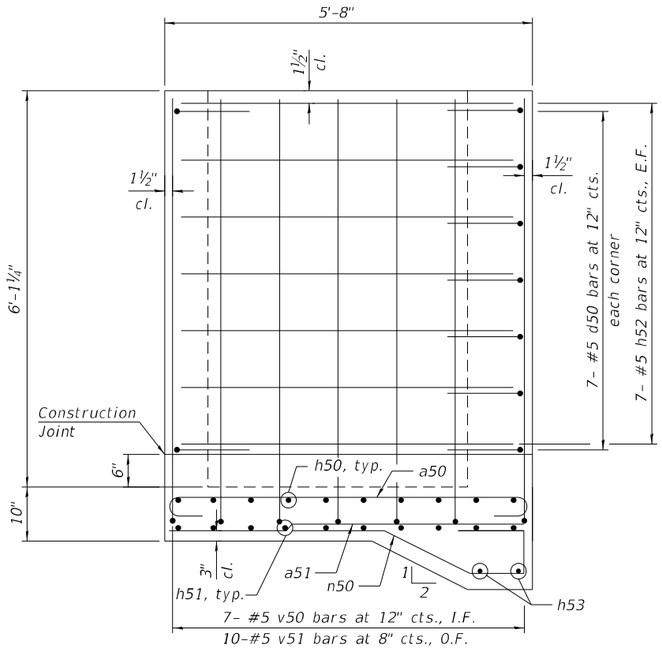

SECTION C-C

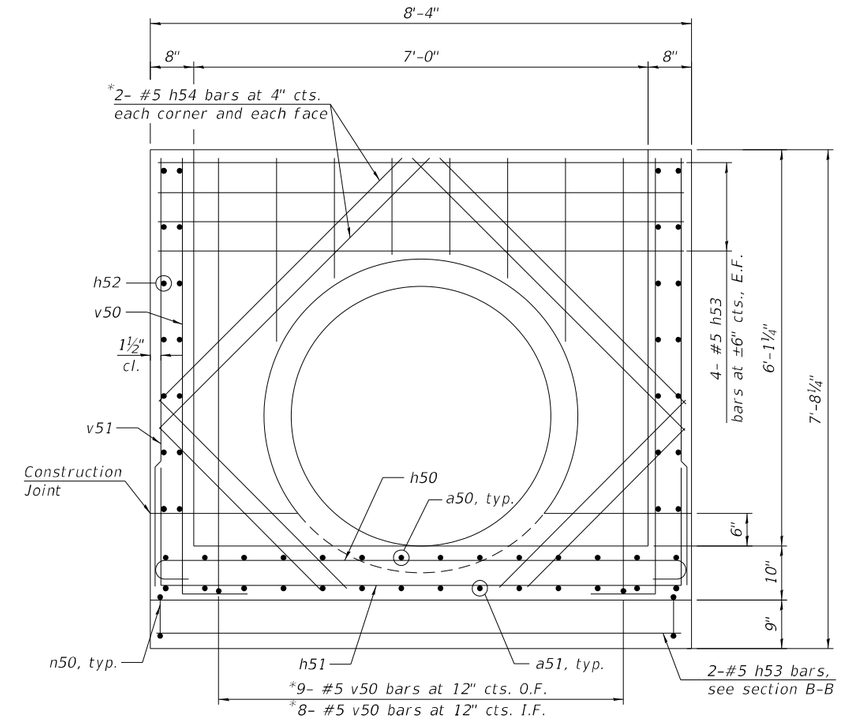

SECTION D-D

* Cut in field to fit

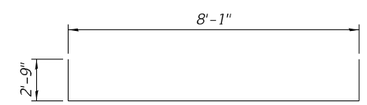

BAR h51

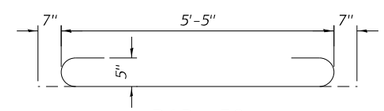

BAR a50

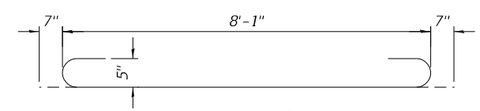

BAR h50

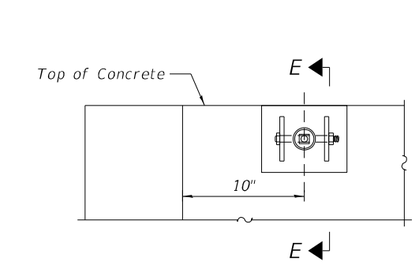

DETAIL A

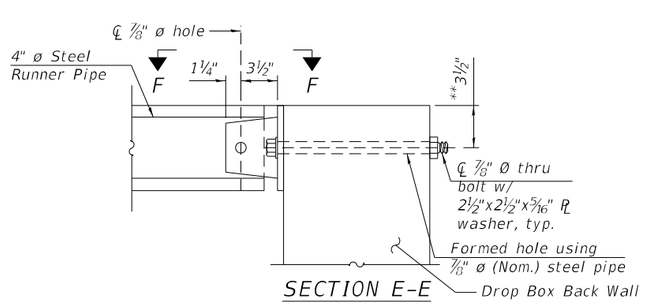

SECTION E-E

**Measured perpendicular to top of wall. In addition, formed hole shall be located at a min. of 6" measured horizontally from any vertical joints necessary for construction of the culvert drop box.

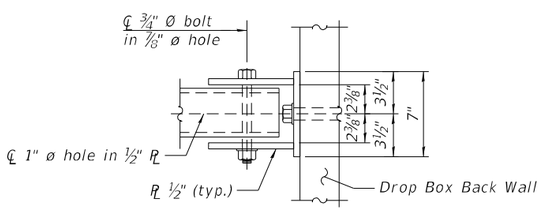

VIEW F-F

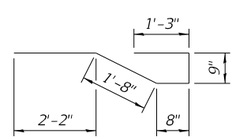

BAR n50

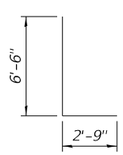

BAR v50

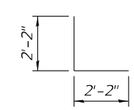

BAR d50

BILL OF MATERIAL

(For Information Only)

Bar	No.	Size	Length	Shape
a50	14	#5	6'-7"	
a51	14	#5	5'-5"	
d50	28	#5	4'-4"	
h50	10	#5	9'-3"	
h51	10	#5	13'-7"	
h52	28	#5	5'-5"	
h53	24	#5	8'-1"	
h54	16	#5	5'-8"	
n50	14	#5	6'-6"	
v50	48	#5	9'-3"	
v51	20	#5	6'-6"	
** Reinforcement Bars			Pound	1690
** Concrete Structures			Cu Yd	5.5
*** 4" Galv. Steel Pipe			4 @	3'-8"
*** Side Assembly			Each	8

** Included in Drop Box No. 5

*** Included in Traversable Pipe Grate, Special with all hardware and steel for Assemblies

FILE NAME: pw:\\ws\ndh-pw.bentley.com:ssandh-pw-01\Documents\Transportation\Projects\1130059,000 US 20 Stockton\CAD\Structures\HBM\043110G-D264840-002-Details.dgn

HBM ENGINEERING GROUP, LLC

USER NAME = BlomquiM	DESIGNED - MAA, KJD	REVISED -
	DRAWN - KJD, AI	REVISED -
PLOT SCALE = 2.3333 ' / in.	CHECKED - MI, MAI	REVISED -
PLOT DATE = 10/3/2022	DATE - 08-02-2021	REVISED -

STATE OF ILLINOIS
DEPARTMENT OF TRANSPORTATION

CULVERT DROP BOX DETAILS
DROP BOX NO. 5

SHEET NO. 2 OF 2 SHEETS

F.A.P. RTE.	SECTION	COUNTY	TOTAL SHEETS	SHEET NO.
301	24R	JO DAVIESS	594	316

CONTRACT NO. 64B40

ILLINOIS | FED. AID PROJECT

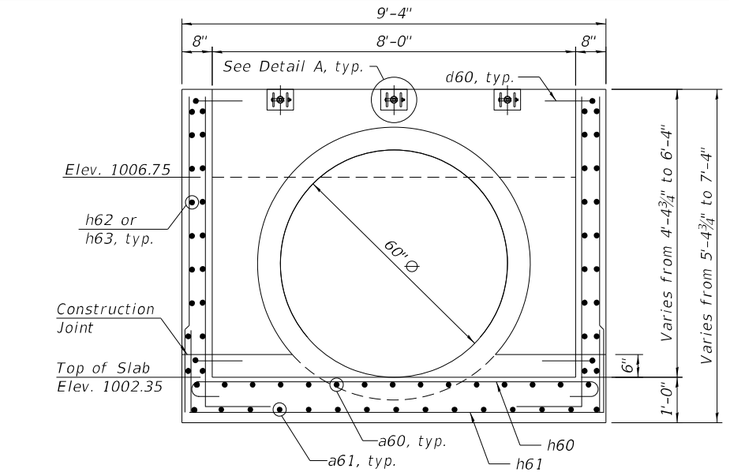

* Cut in field to fit

SECTION A-A

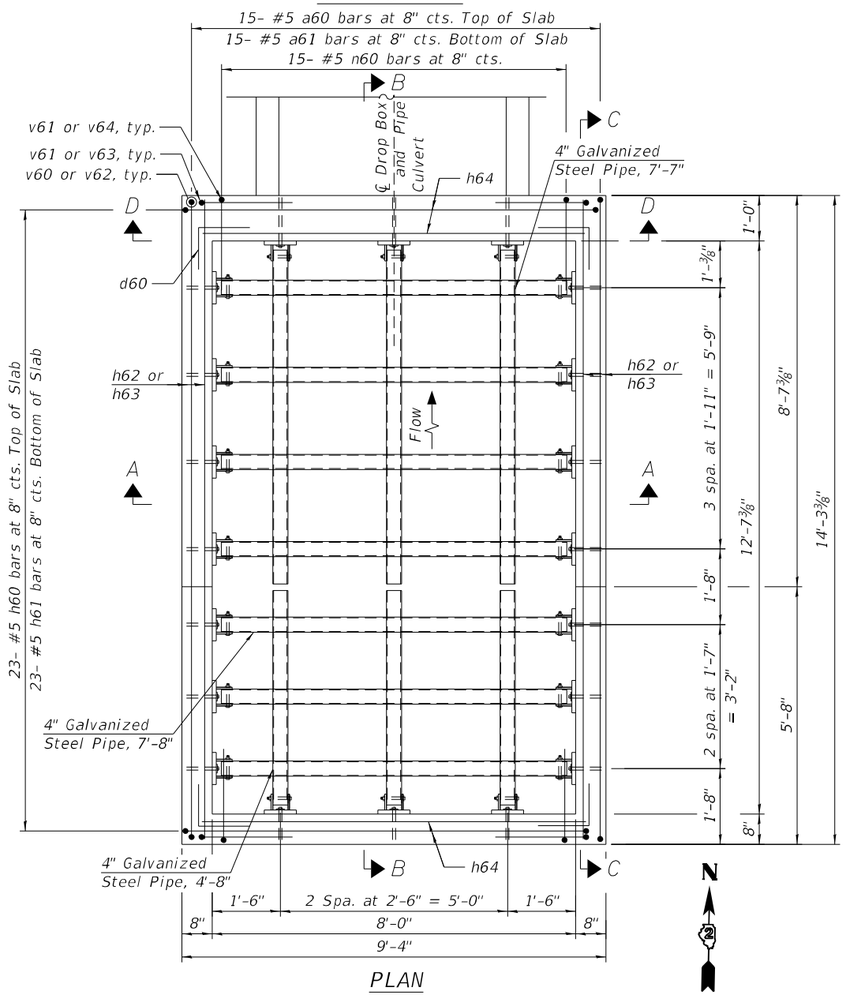

PLAN

GENERAL NOTES

1. Reinforcement bars shall conform to the requirements of ASTM A 706 Gr 60.
2. All exposed concrete edges shall be chamfered ¾" unless otherwise noted.
3. All construction joints shall be bonded.
4. The contract unit price "Each" for Drop Box No. 1 shall include the Concrete Box Culverts, Reinforcement Bars, earth excavation where required, backfilling, compacted CA-7 aggregate bedding material and necessary grading to fit the structure as shown, or to the slope.
5. The contract unit price "Foot" for Traversable Pipe Grate, Special shall include the steel pipe grate system, steel plates, bolts, nuts, washers, anchor rods and all necessary drilling and grouting.
6. Steel pipes shall conform to ASTM A-53 (Type E or S) Grade B, Schedule 40 and shall be galvanized conforming to ASTM A-120.
7. Steel plates shall conform to AASHTO M-183 and shall be galvanized conforming to AASHTO M-111.
8. Bolts, nuts and washer shall be in accordance with Article 1006.08 of the Standard Specifications and shall be galvanized.
9. Contractor shall field verify galvanized pipe length prior to ordering.
10. The minimum distance from the center of a hole to the free edge of a structural shape or plate shall be 1½" unless noted otherwise.
11. Bolts and anchor rods shall be snug tightened by a few impacts of an impact wrench or the full force of a worker using an ordinary spud wrench.
12. This work shall be done according to the applicable portions of Sections 501 thru 503, 505, 508, 540 and 584 of the Standard Specifications.
13. Fabrication of the Steel Pipe Grate System shall conform to the requirements in Section 505 of the Standard Specifications unless noted otherwise.
14. Contractor to confirm that a minimum allowable gross bearing pressure equal to 2000 PSF can be achieved prior to construction of Drop Box structure.
15. Backfilling and future excavations shall be performed equally on all sides of the structure.
16. Anchor rods shall conform to the requirements of ASTM F1554, Grade 105. If the Contractor elects to drill and grout the anchors, they shall be drilled and epoxy-grouted according to the requirements of Section 584 of the Standard Specifications. The chemical adhesive system shall be capable of achieving a minimum proof load of 5,000 pounds and an ultimate shear capacity of 8,000 pounds per anchor.
17. A minimum of 6" of compacted CA-7 aggregate bedding material shall be placed beneath the drop box.

DESIGN STRESSES

FIELD UNITS

f'c = 3,500 psi

fy = 60,000 psi (Reinforcement)

TOTAL BILL OF MATERIAL

ITEM	UNIT	TOTAL
Drop Box No. 6	Each	1
Traversable Pipe Grate, Special	Foot	91

STATE OF ILLINOIS
MOUSSA A. ISSA
081-005738
CHICAGO, ILLINOIS
LICENSED STRUCTURAL ENGINEER

SIGNED Moussa A. Issa
DR. MOUSSA A. ISSA, S.E. IL. LIC. NO. 081-005738
EXPIRES 11-30-2022

DATE 7/8/2022 FOR SHEETS 1 AND 2

PLAN AND ELEVATION
DROP BOX NO. 6
STATION 2171+10.39
OFFSET 38.65 RT

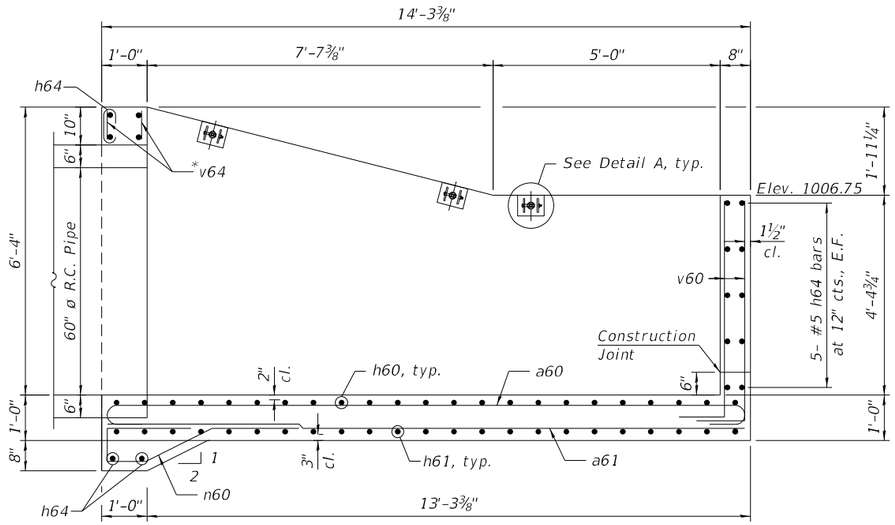

SECTION B-B

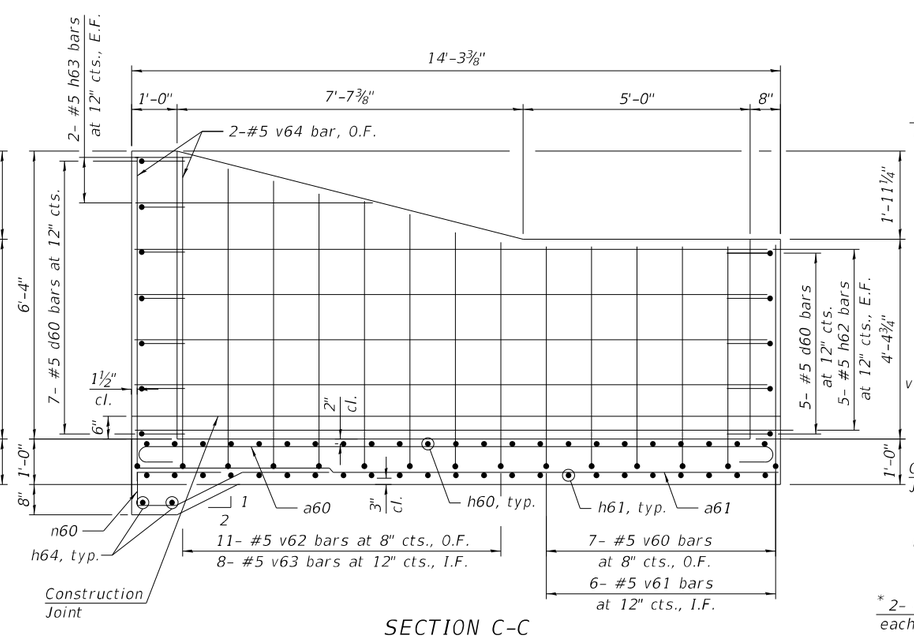

SECTION C-C

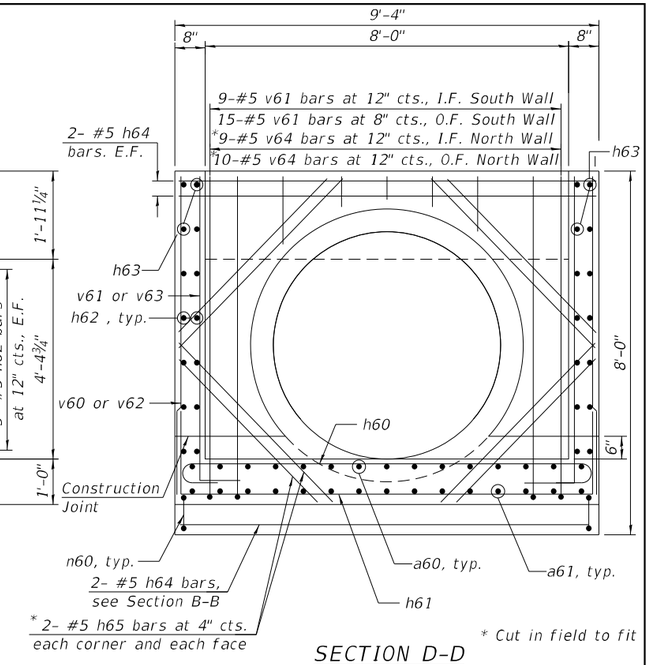

SECTION D-D

* Cut in field to fit

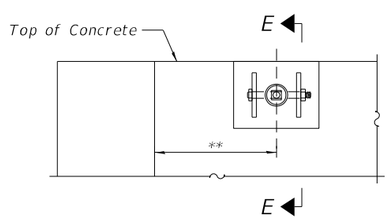

DETAIL A

**See Plan view for placement

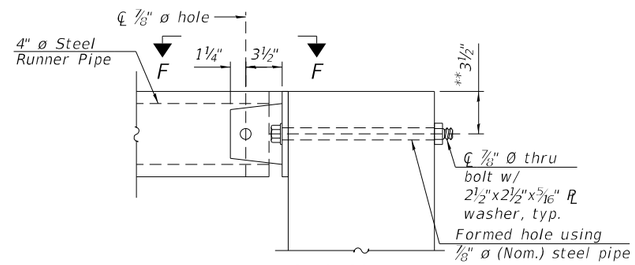

SECTION E-E

**Measured perpendicular to top of wall. In addition, formed hole shall be located at a min. of 6" measured horizontally from any vertical joints necessary for construction of the culvert drop box

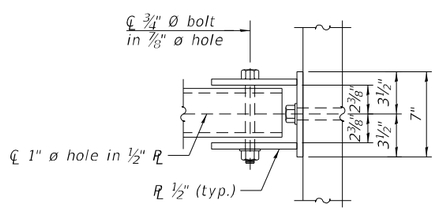

VIEW F-F

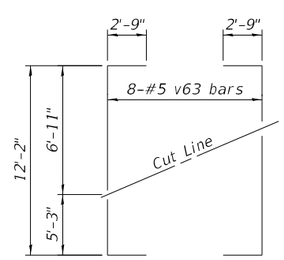

BAR v63

Order bars full length. Cut as shown and use remainder of bars in opposite wall

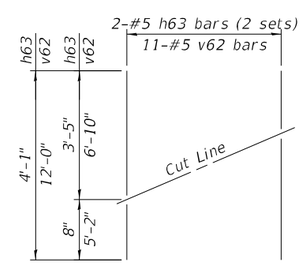

BARS h63 & v62

Order bars full length. Cut as shown and use remainder of bars in opposite wall

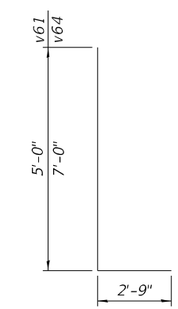

BARS v61 and v64

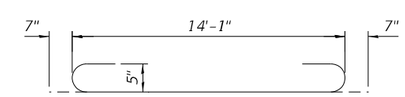

BAR a60

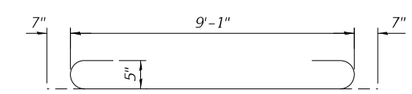

BAR h60

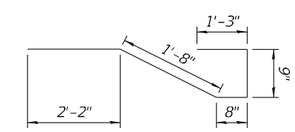

BAR n60

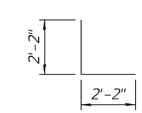

BAR d60

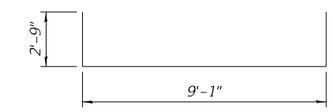

BAR h61

BILL OF MATERIAL

(For Information Only)

Bar	No.	Size	Length	Shape
a60	15	#5	15'-3"	
a61	15	#5	14'-1"	
d60	24	#5	4'-4"	
h60	23	#5	10'-3"	
h61	23	#5	14'-7"	
h62	20	#5	14'-0"	
h63	4	#5	4'-1"	
h64	16	#5	9'-1"	
h65	16	#5	5'-3"	
n60	15	#5	6'-6"	
v60	14	#5	5'-0"	
v61	32	#5	7'-9"	
v62	8	#5	12'-2"	
v63	6	#5	17'-8"	
v64	21	#5	9'-9"	
** Reinforcement Bars			Pound	2700
** Concrete Structures			Cu Yd	10.6
*** 4" Galv. Steel Pipe			7@	7'-8"
*** 4" Galv. Steel Pipe			3@	7'-7"
*** 4" Galv. Steel Pipe			3@	4'-8"
*** Side Assembly			Each	20

**Included in Drop Box No. 6

***Included in Traversable Pipe Grate Special with all hardware and steel for Assemblies

FILE NAME: pw:\\vesdh-pw.bentley.com:vesdh-pw-01\Documents\Transportation\Projects\113059_000_US 20 Stockton\CAD\Structures\HBM\043110425R4C-002-Details.dgn

HBM ENGINEERING GROUP, LLC

USER NAME = BlomquiM	DESIGNED - MAA, KJD	REVISED -	
	DRAWN - KJD, EK	REVISED -	
PLOT SCALE = 3.3333 ' / in.	CHECKED - MI, MAI	REVISED -	
PLOT DATE = 10/3/2022	DATE - 08-02-2021	REVISED -	

STATE OF ILLINOIS
DEPARTMENT OF TRANSPORTATION

CULVERT DROP BOX DETAILS
DROP BOX NO. 6

SHEET NO. 2 OF 2 SHEETS

F.A.P. RTE.	SECTION	COUNTY	TOTAL SHEETS	SHEET NO.
301	24R	JO DAVIESS	594	318
		CONTRACT NO. 64B40		
		ILLINOIS	FED. AID PROJECT	

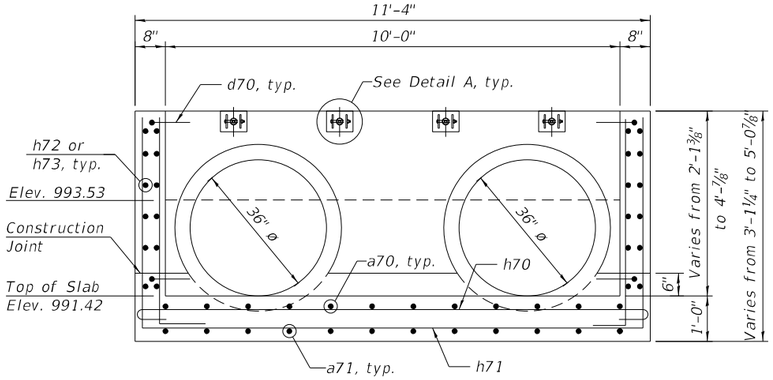

* Cut in field to fit

SECTION A-A

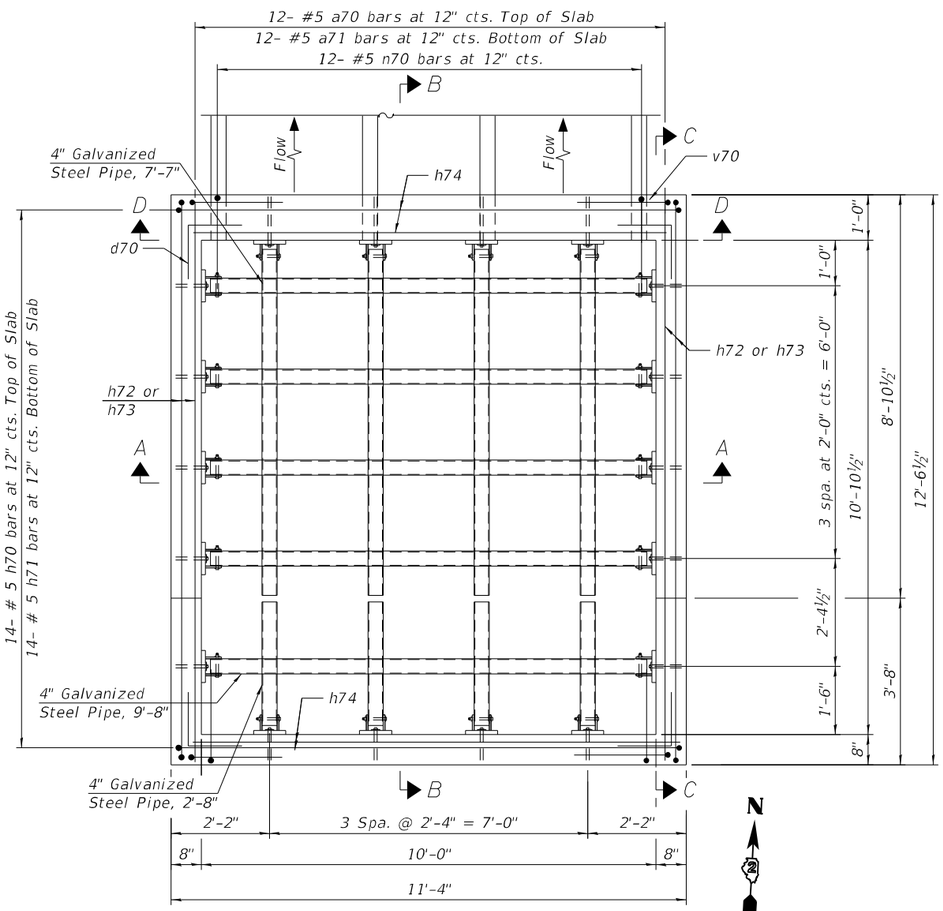

PLAN

GENERAL NOTES

1. Reinforcement bars shall conform to the requirements of ASTM A 706 Gr 60.
2. All exposed concrete edges shall be chamfered ¾" unless otherwise noted.
3. All construction joints shall be bonded.
4. The contract unit price "Each" for Drop Box No. 1 shall include the Concrete Box Culverts, Reinforcement Bars, earth excavation where required, backfilling, compacted CA-7 aggregate bedding material and necessary grading to fit the structure as shown, or to the slope.
5. The contract unit price "Foot" for Traversable Pipe Grate, Special shall include the steel pipe grate system, steel plates, bolts, nuts, washers, anchor rods and all necessary drilling and grouting.
6. Steel pipes shall conform to ASTM A-53 (Type E or S) Grade B, Schedule 40 and shall be galvanized conforming to ASTM A-120.
7. Steel plates shall conform to AASHTO M-183 and shall be galvanized conforming to AASHTO M-111.
8. Bolts, nuts and washer shall be in accordance with Article 1006.08 of the Standard Specifications and shall be galvanized.
9. Contractor shall field verify galvanized pipe length prior to ordering.
10. The minimum distance from the center of a hole to the free edge of a structural shape or plate shall be 1½" unless noted otherwise.
11. Bolts and anchor rods shall be snug tightened by a few impacts of an impact wrench or the full force of a worker using an ordinary spud wrench.
12. This work shall be done according to the applicable portions of Sections 501 thru 503, 505, 508, 540 and 584 of the Standard Specifications.
13. Fabrication of the Steel Pipe Grate System shall conform to the requirements in Section 505 of the Standard Specifications unless noted otherwise.
14. Contractor to confirm that a minimum allowable gross bearing pressure equal to 2000 PSF can be achieved prior to construction of Drop Box structure.
15. Backfilling and future excavations shall be performed equally on all sides of the structure.
16. Anchor rods shall conform to the requirements of ASTM F1554, Grade 105. If the Contractor elects to drill and grout the anchors, they shall be drilled and epoxy-grouted according to the requirements of Section 584 of the Standard Specifications. The chemical adhesive system shall be capable of achieving a minimum proof load of 5,000 pounds and an ultimate shear capacity of 8,000 pounds per anchor.
17. A minimum of 6" of compacted CA-7 aggregate bedding material shall be placed beneath the drop box.

DESIGN STRESSES

FIELD UNITS

f'c = 3,500 psi
fy = 60,000 psi (Reinforcement)

TOTAL BILL OF MATERIAL

ITEM	UNIT	TOTAL
Drop Box No. 7	Each	1
Traversable Pipe Grate, Special	Foot	90

STATE OF ILLINOIS
MOUSSA A. ISSA
081-005738
CHICAGO, ILLINOIS
LICENSED STRUCTURAL ENGINEER

SIGNED Moussa A. Issa
DR. MOUSSA A. ISSA, S.E. IL. LIC. NO. 081-005738
EXPIRES 11-30-2022

DATE 7/8/2022 FOR SHEETS 1 AND 2

PLAN AND ELEVATION
DROP BOX NO. 7
STATION 2180+76.32
OFFSET 42.27 RT

FILE NAME: pw:\\vs-sdh-pw.bentley.com:sandh-pw401\Documents\Transportation\Projects\1130059,000 US 20 Stockton\CAD\Structures\HBM\043111\5-D7646B46-001-GPF.dgn

HBM ENGINEERING GROUP, LLC

USER NAME = EtzwilleE	DESIGNED - MAA, KJD	REVISED -	
	DRAWN - MAA, KJD	REVISED -	
PLOT SCALE = 3.3333 ' / in.	CHECKED - MI	REVISED -	
PLOT DATE = 6/28/2022	DATE - 08-02-2021	REVISED -	

STATE OF ILLINOIS
DEPARTMENT OF TRANSPORTATION

PLAN AND ELEVATION
DROP BOX NO. 7

SHEET NO. 1 OF 2 SHEETS

F.A.P. RTE.	SECTION	COUNTY	TOTAL SHEETS	SHEET NO.
301	24R	JO DAVIESS	594	319
		CONTRACT NO. 64B40		
		ILLINOIS FED. AID PROJECT		

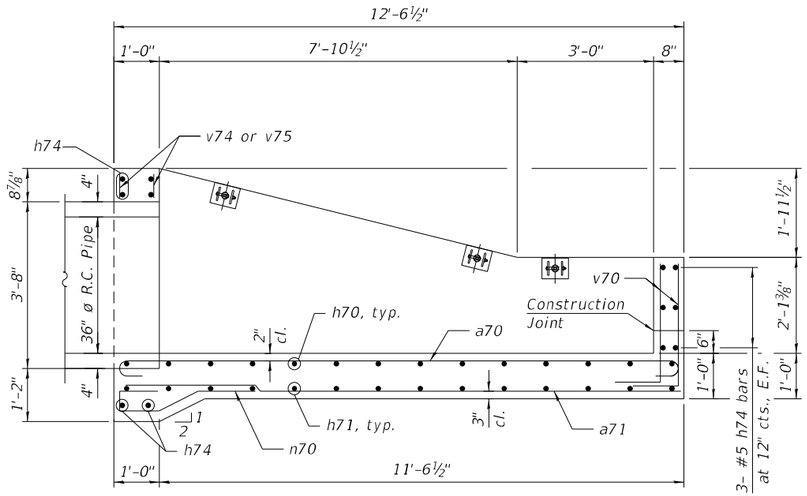

SECTION B-B

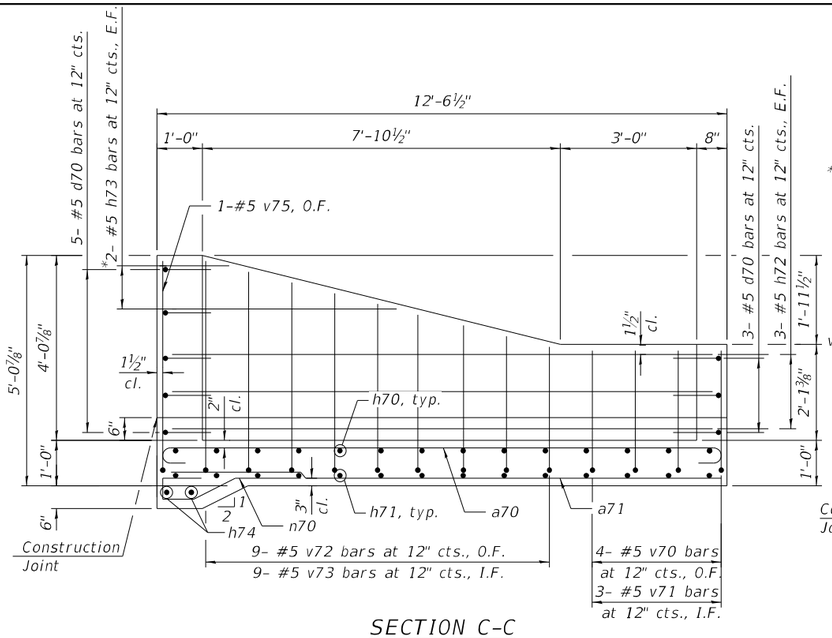

SECTION C-C

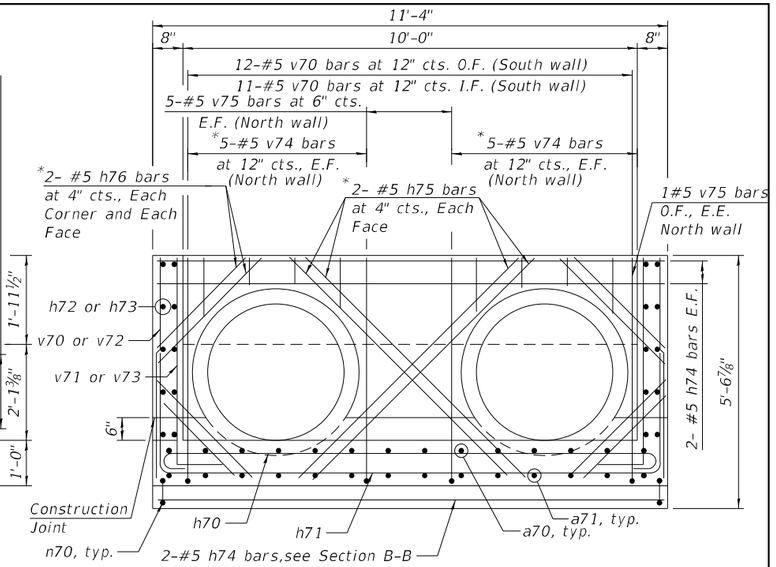

SECTION D-D

* Cut in field to fit

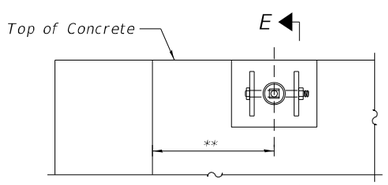

DETAIL A

** See Plan view for spacing

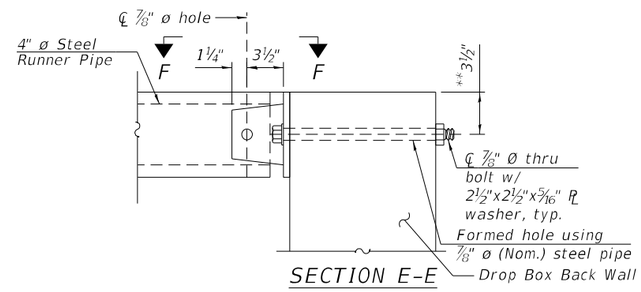

SECTION E-E

** Measured perpendicular to top of wall. In addition, formed hole shall be located at a min. of 6" measured horizontally from any vertical joints necessary for construction of the culvert drop box.

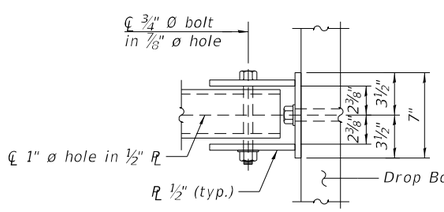

VIEW F-F

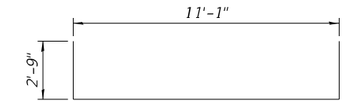

BAR h71

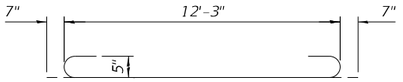

BAR a70

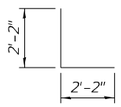

BAR d70

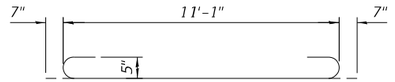

BAR h70

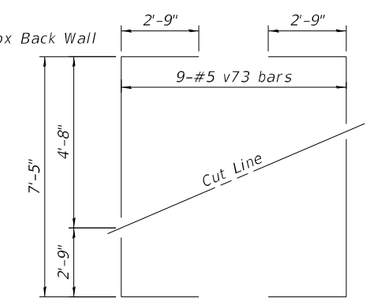

BAR v73

Ordre bars full length. Cut as shown and use remainder of bars in opposit face

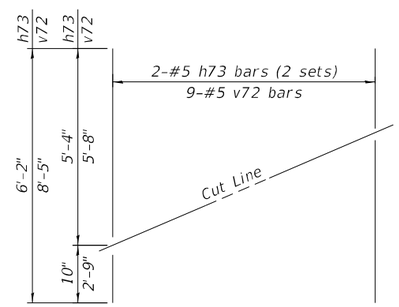

BARS h73 and v72

Ordre bars full length. Cut as shown and use remainder of bars in opposit face

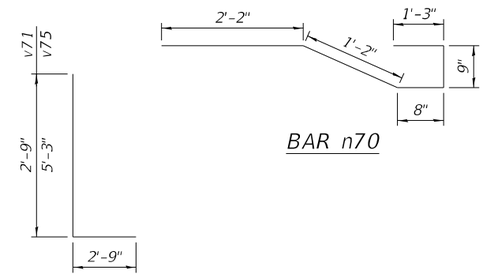

BARS v71 and v75

BAR n70

BILL OF MATERIAL

Bar	No.	Size	Length	Shape
a70	12	#5	13'-5"	
a71	12	#5	12'-3"	
d70	16	#5	4'-4"	
h70	14	#5	12'-3"	
h71	14	#5	16'-7"	
h72	12	#5	12'-3"	
h73	4	#5	6'-2"	
h74	12	#5	11'-1"	
h75	8	#5	8'-0"	
h76	8	#5	4'-3"	
n70	12	#5	6'-0"	
v70	31	#5	2'-9"	
v71	6	#5	5'-6"	
v72	9	#5	7'-7"	
v73	9	#5	13'-2"	
v74	20	#5	2'-3"	
v75	14	#5	8'-0"	
** Reinforcement Bars			Pound	1800
** Concrete Structures			Cu Yd	8.5
*** 4" Galv. Steel Pipe			5 @	9'-8"
*** 4" Galv. Steel Pipe			4 @	7'-7"
*** 4" Galv. Steel Pipe			4 @	2'-8"
*** Side Assembly			Each	18

** Included in Drop Box No. 7

*** Included in Traversable Pipe Grate, Special with all hardware and steel for Assemblies

FILE NAME: pw:\\hbh-pw.bentley.com:hbandl-pw40\Documents\Transportation\Projects\13005\0_US 20 Stockton\CAD\Structures\HBM\0431116-D264B40-002-Details.dgn

HBM ENGINEERING GROUP, LLC

USER NAME = BlomquiM	DESIGNED - MAA, KJD	REVISED -	
	DRAWN - KJD, EK	REVISED -	
PLOT SCALE = 3.3333 ' / in.	CHECKED - MI, MAI	REVISED -	
PLOT DATE = 10/3/2022	DATE - 08-02-2021	REVISED -	

STATE OF ILLINOIS
DEPARTMENT OF TRANSPORTATION

CULVERT DROP BOX DETAILS
DROP BOX NO. 7

SHEET NO. 2 OF 2 SHEETS

F.A.P. RTE.	SECTION	COUNTY	TOTAL SHEETS	SHEET NO.
301	24R	JO DAVIESS	594	320
		CONTRACT NO. 64B40		
		ILLINOIS FED. AID PROJECT		

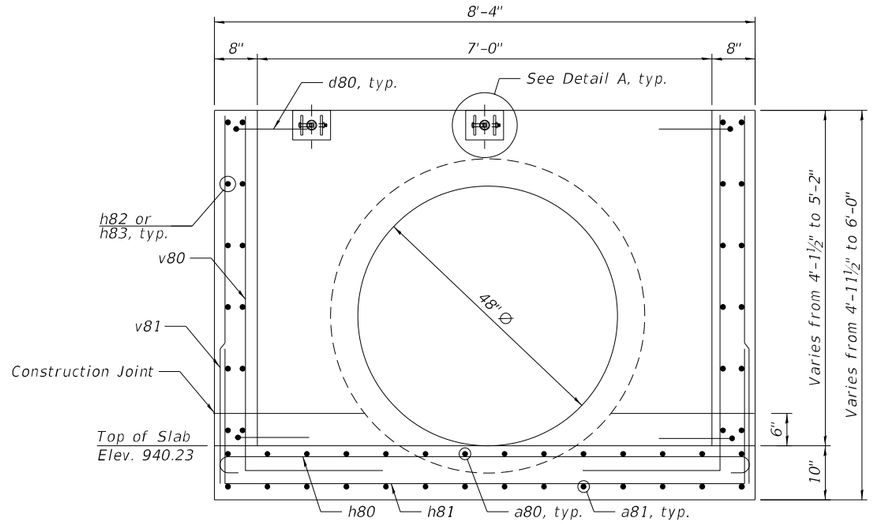

SECTION A-A

* Cut in field to fit

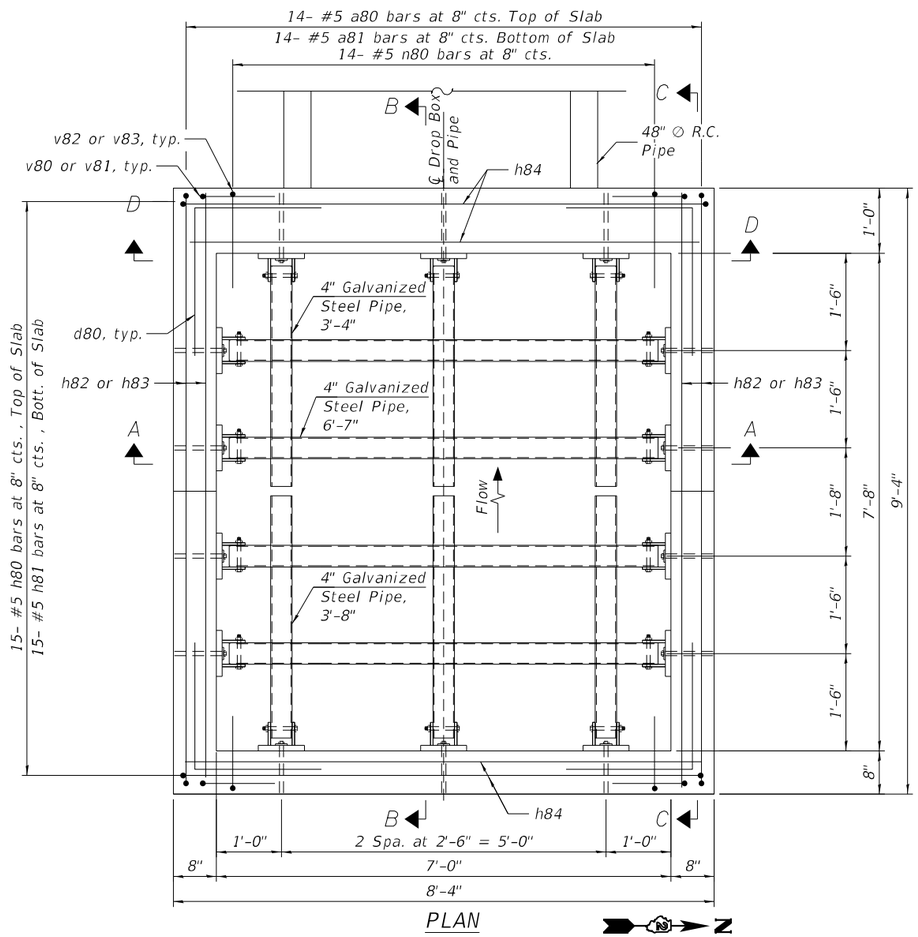

PLAN

GENERAL NOTES

1. Reinforcement bars shall conform to the requirements of ASTM A 706 Gr 60.
2. All exposed concrete edges shall be chamfered ¾" unless otherwise noted.
3. All construction joints shall be bonded.
4. The contract unit price "Each" for Drop Box No. 8 shall include the Concrete Box Culverts, Reinforcement Bars, earth excavation where required, backfilling, compacted CA-7 aggregate bedding material and necessary grading to fit the structure as shown, or to the slope.
5. The contract unit price "Foot" for Traversable Pipe Grate, Special shall include the steel pipe grate system, steel plates, bolts, nuts, washers, anchor rods and all necessary drilling and grouting.
6. Steel pipes shall conform to ASTM A-53 (Type E or S) Grade B, Schedule 40 and shall be galvanized conforming to ASTM A-120.
7. Steel plates shall conform to AASHTO M-183 and shall be galvanized conforming to AASHTO M-111.
8. Bolts, nuts and washer shall be in accordance with Article 1006.08 of the Standard Specifications and shall be galvanized.
9. Contractor shall field verify galvanized pipe length prior to ordering.
10. The minimum distance from the center of a hole to the free edge of a structural shape or plate shall be 1½" unless noted otherwise.
11. Bolts and anchor rods shall be snug tightened by a few impacts of an impact wrench or the full force of a worker using an ordinary spud wrench.
12. This work shall be done according to the applicable portions of Sections 501 thru 503, 505, 508, 540 and 584 of the Standard Specifications.
13. Fabrication of the Steel Pipe Grate System shall conform to the requirements in Section 505 of the Standard Specifications unless noted otherwise.
14. Contractor to confirm that a minimum allowable gross bearing pressure equal to 2000 PSF can be achieved prior to construction of Drop Box structure.
15. Backfilling and future excavations shall be performed equally on all sides of the structure.
16. Anchor rods shall conform to the requirements of ASTM F1554, Grade 105. If the Contractor elects to drill and grout the anchors, they shall be drilled and epoxy-grouted according to the requirements of Section 584 of the Standard Specifications. The chemical adhesive system shall be capable of achieving a minimum proof load of 5,000 pounds and an ultimate shear capacity of 8,000 pounds per anchor.
17. A minimum of 6" of compacted CA-7 aggregate bedding material shall be placed beneath the drop box.

DESIGN STRESSES

FIELD UNITS

f'c = 3,500 psi
fy = 60,000 psi (Reinforcement)

TOTAL BILL OF MATERIAL

ITEM	UNIT	TOTAL
Drop Box No. 8	Each	1
Traversable Pipe Grate, Special	Foot	48

STATE OF ILLINOIS
MOUSSA A. ISSA
081-005738
CHICAGO, ILLINOIS
LICENSED STRUCTURAL ENGINEER

SIGNED Moussa A. Issa
DR. MOUSSA A. ISSA, S.E. IL. LIC. NO. 081-005738
EXPIRES 11-30-2022

DATE 7/8/2022 FOR SHEETS 1 AND 2

PLAN AND ELEVATION
DROP BOX NO. 8
MAPES RD STATION 300+84.27
OFFSET 44.00 RT

FILE NAME: pw:\\vs:ngh-pw.bentley.com:ngh-pw-ent\Documents\Transportation\Projects\113005\000 US 20 Stockton\CAD\Structures\HBM\043117-D764B40-001-GPF.dgn

HBM ENGINEERING GROUP, LLC	USER NAME = EtzwilleE	DESIGNED - MAA	REVISED -	STATE OF ILLINOIS DEPARTMENT OF TRANSPORTATION	PLAN AND ELEVATION DROP BOX. NO. 8	F.A.P. RTE.	SECTION	COUNTY	TOTAL SHEETS	SHEET NO.
		DRAWN - MAA	REVISED -			301	24R	JO DAVIESS	594	321
	PLOT SCALE = 2.3333 ' / in.	CHECKED - MI	REVISED -		SHEET NO. 1 OF 2 SHEETS			CONTRACT NO. 64B40		
	PLOT DATE = 6/28/2022	DATE - 08-02-2021	REVISED -				ILLINOIS	FED. AID PROJECT		

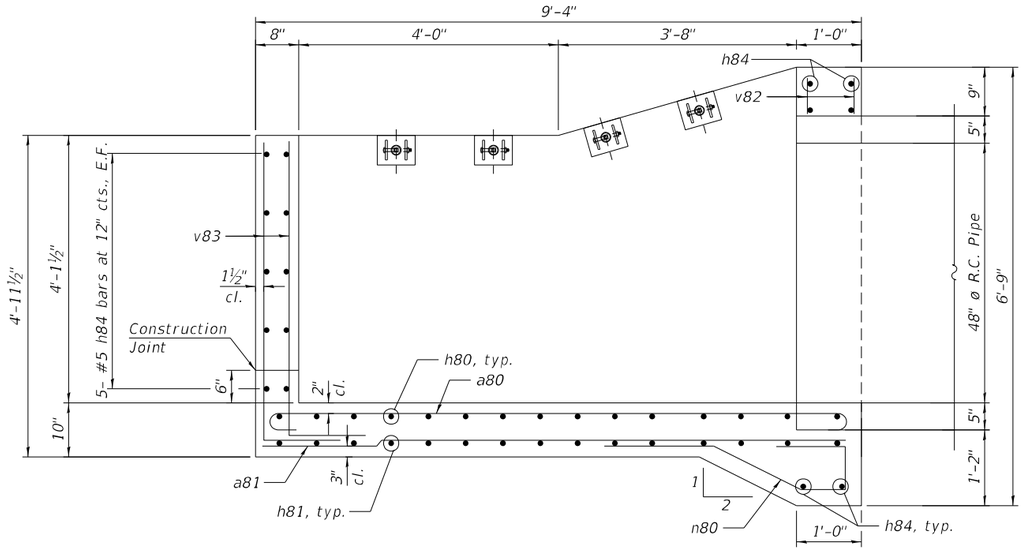

SECTION B-B

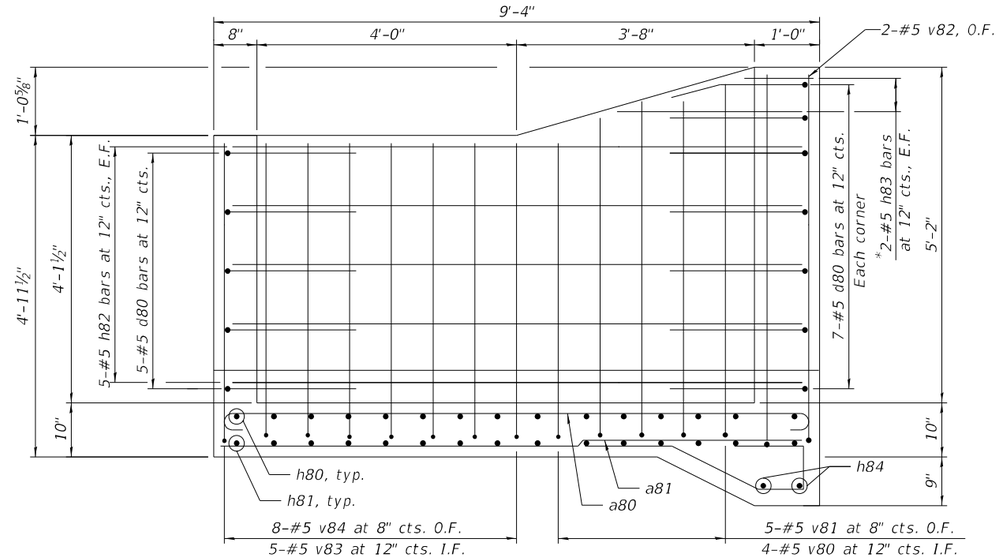

SECTION C-C

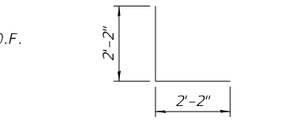

BAR d80

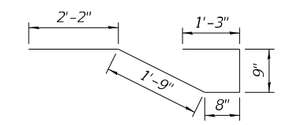

BAR n80

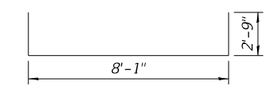

BAR h80

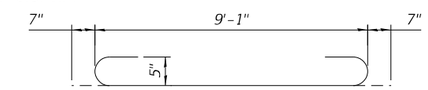

BAR a80

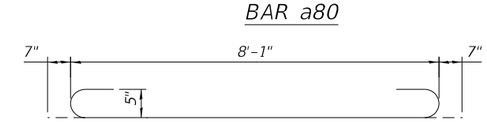

BAR h80

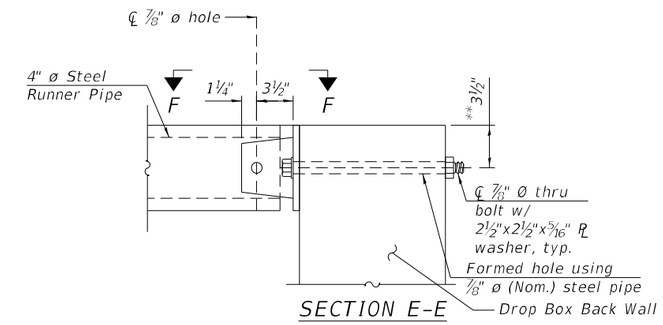

SECTION E-E

**Measured perpendicular to top of wall. In addition, formed hole shall be located at a min. of 6" measured horizontally from any vertical joints necessary for construction of the culvert drop box.

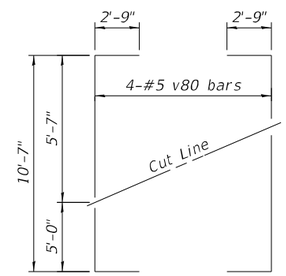

BAR v80

Order bars full length. Cut as shown and use remainder of bars in opposite wall

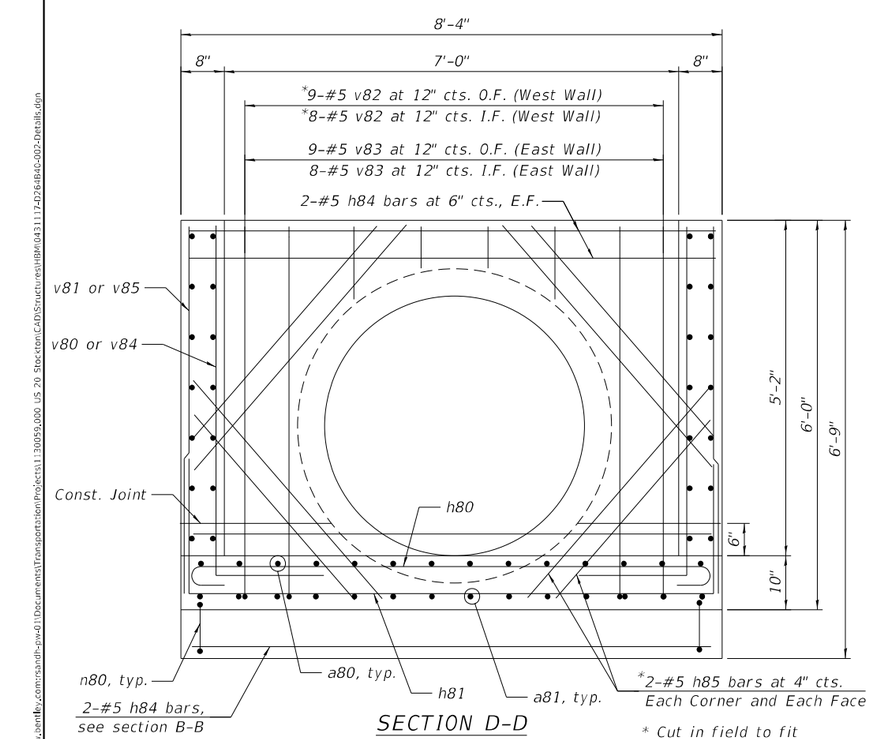

SECTION D-D

* Cut in field to fit

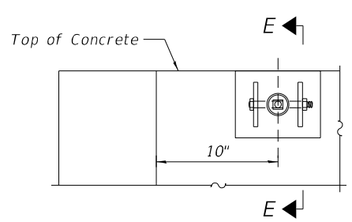

DETAIL A

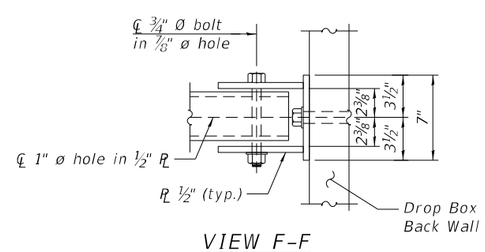

VIEW F-F

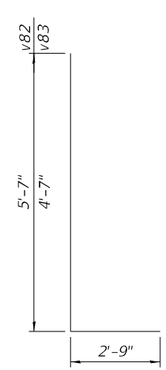

BAR v82 and v83

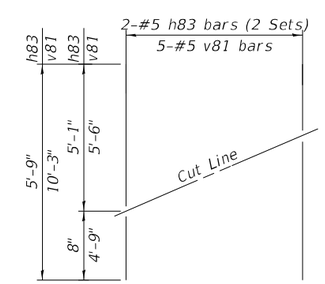

BAR h83 and v81

Order bars full length. Cut as shown and use remainder of bars in opposite wall

BILL OF MATERIAL

(For Information Only)

Bar	No.	Size	Length	Shape
a80	14	#5	10'-3"	
a81	14	#5	9'-1"	
d80	24	#5	4'-4"	
h80	15	#5	9'-3"	
h81	15	#5	13'-7"	
h82	20	#5	9'-1"	
h83	4	#5	5'-9"	
h84	16	#5	8'-1"	
h85	16	#5	5'-8"	
n80	14	#5	6'-7"	
v80	4	#5	16'-1"	
v81	5	#5	10'-3"	
v82	19	#5	8'-4"	
v83	27	#5	7'-4"	
v84	16	#5	4'-6"	
* Reinforcement Bars			Pound	1510
* Concrete Structures			Cu Yd	6.3
** 4" Galv. Steel Pipe			3 @	3'-8"
** 4" Galv. Steel Pipe			3 @	3'-4"
** 4" Galv. Steel Pipe			4 @	6'-7"
Side Assembly			Each	14

* Included in Drop Box No. 8

** Included in Traversable Pipe Grate, Special with all hardware and steel for Assemblies

FILE NAME: pw:\\hbs-pw.bentley.com:ssandh-pw01\Documents\Transportation\Projects\130059,000 US 20 Stockton\CAD\Structures\HBM043117-D264B40-002-Details.dgn

HBM ENGINEERING GROUP, LLC

USER NAME = BlomquiM	DESIGNED - MAA	REVISED -	
	DRAWN - MAA	REVISED -	
PLOT SCALE = 2.3333 ' / in.	CHECKED - MI	REVISED -	
PLOT DATE = 10/3/2022	DATE - 08-02-2021	REVISED -	

STATE OF ILLINOIS
DEPARTMENT OF TRANSPORTATION

CULVERT DROP BOX DETAILS
DROP BOX NO. 8

SHEET NO. 2 OF 2 SHEETS

F.A.P. RTE.	SECTION	COUNTY	TOTAL SHEETS	SHEET NO.
301	24R	JO DAVIESS	594	322
		CONTRACT NO. 64B40		
		ILLINOIS FED. AID PROJECT		

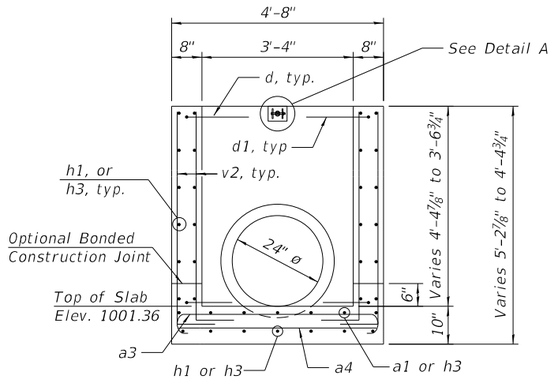

SECTION A-A

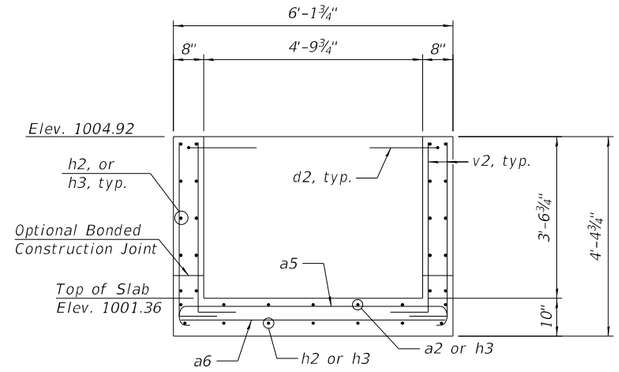

SECTION E-E

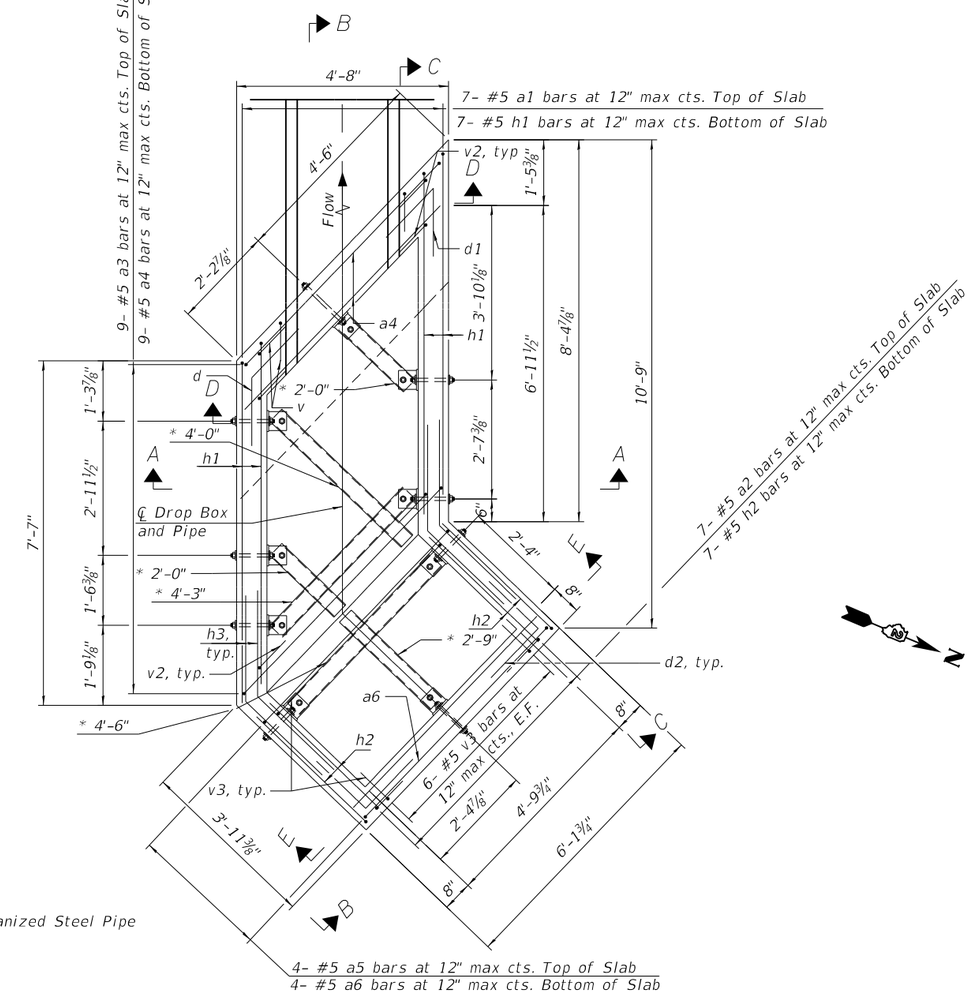

* 4" Galvanized Steel Pipe

4- #5 a5 bars at 12" max cts. Top of Slab
4- #5 a6 bars at 12" max cts. Bottom of Slab

PLAN

GENERAL NOTES

1. Reinforcement bars shall conform to the requirements of ASTM A 706 Gr 60.
2. All exposed concrete edges shall be chamfered ¾" unless otherwise noted.
3. All construction joints shall be bonded.
4. The contract unit price "Each" for Drop Box No. 9 shall include the Concrete Box Culverts, Reinforcement Bars, earth excavation where required, backfilling, compacted CA-7 aggregate bedding material and necessary grading to fit the structure as shown, or to the slope.
5. The contract unit price "Foot" for Traversable Pipe Grate, Special shall include the steel pipe grate system, steel plates, bolts, nuts, washers, anchor rods and all necessary drilling and grouting.
6. Steel pipes shall conform to ASTM A-53 (Type E or S) Grade B, Schedule 40 and shall be galvanized conforming to ASTM A-120.
7. Steel plates shall conform to AASHTO M-183 and shall be galvanized conforming to AASHTO M-111.
8. Bolts, nuts and washer shall be in accordance with Article 1006.08 of the Standard Specifications and shall be galvanized.
9. Contractor shall field verify galvanized pipe length prior to ordering.
10. The minimum distance from the center of a hole to the free edge of a structural shape or plate shall be 1½" unless noted otherwise.
11. Bolts and anchor rods shall be snug tightened by a few impacts of an impact wrench or the full force of a worker using an ordinary spud wrench.
12. This work shall be done according to the applicable portions of Sections 501 thru 503, 505, 508, 540 and 584 of the Standard Specifications.
13. Fabrication of the Steel Pipe Grate System shall conform to the requirements in Section 505 of the Standard Specifications unless noted otherwise.
14. Contractor to confirm that a minimum allowable gross bearing pressure equal to 2000 PSF can be achieved prior to construction of Drop Box structure.
15. Backfilling and future excavations shall be performed equally on all sides of the structure.
16. Anchor rods shall conform to the requirements of ASTM F1554, Grade 105. If the Contractor elects to drill and grout the anchors, they shall be drilled and epoxy-grouted according to the requirements of Section 584 of the Standard Specifications. The chemical adhesive system shall be capable of achieving a minimum proof load of 5,000 pounds and an ultimate shear capacity of 8,000 pounds per anchor.
17. A minimum of 6" of compacted CA-7 aggregate bedding material shall be placed beneath the drop box.
18. The Contractor may install the thru bolts using drilling and grouting in lieu of providing a formed hole using steel pipe. Installation shall be in accordance with Article 509.06 using a method that results in the annulus surrounding the bolt being completely filled with adhesive. The method of drilling shall not result in spalled concrete at the exit face. Epoxy grouted thru bolts shall be snug tightened followed by an additional ⅓ turn on the interior nut at final installation. Cost included with Traversable Pipe Grate.

DESIGN STRESSES

FIELD UNITS

f'c = 3,500 psi
fy = 60,000 psi (Reinforcement)

JOSEPH KLENCK
081-008344
LICENSED
STRUCTURAL
ENGINEER
STATE OF ILLINOIS

BY: 7/15/2024
LICENSE EXPIRES: 11/30/2024

TOTAL BILL OF MATERIAL

ITEM	UNIT	TOTAL
Drop Box No. 9	Each	1
Traversable Pipe Grate, Special	Foot	20

PLAN AND ELEVATION
DROP BOX NO. 9
STATION 2139+81.32
OFFSET 29.16 LT

FILE NAME: pw:\\rsandh-pw.bentley.com:rsandh-pw-01\Documents\Transportation\Projects\1130059,000 US 20 Stockton\CAD\Structures\XXXXXX1-H26418-0 sht 001 DropBoxDetails

RS&H	USER NAME = LorrL	DESIGNED - BPK	REVISED -
		DRAWN - JVS	REVISED -
	PLOT SCALE =	CHECKED - JIK	REVISED -
	PLOT DATE = 7/11/2024	DATE - 06/24/2022	REVISED -

STATE OF ILLINOIS
DEPARTMENT OF TRANSPORTATION

PLAN AND ELEVATION
DROP BOX NO. 9

SHEET NO. 1 OF 2 SHEETS

F.A.P. RTE.	SECTION	COUNTY	TOTAL SHEETS	SHEET NO.
301	24R	JO DAVIESS	594	323
		CONTRACT NO. 64B40		
		ILLINOIS	FED. AID PROJECT	

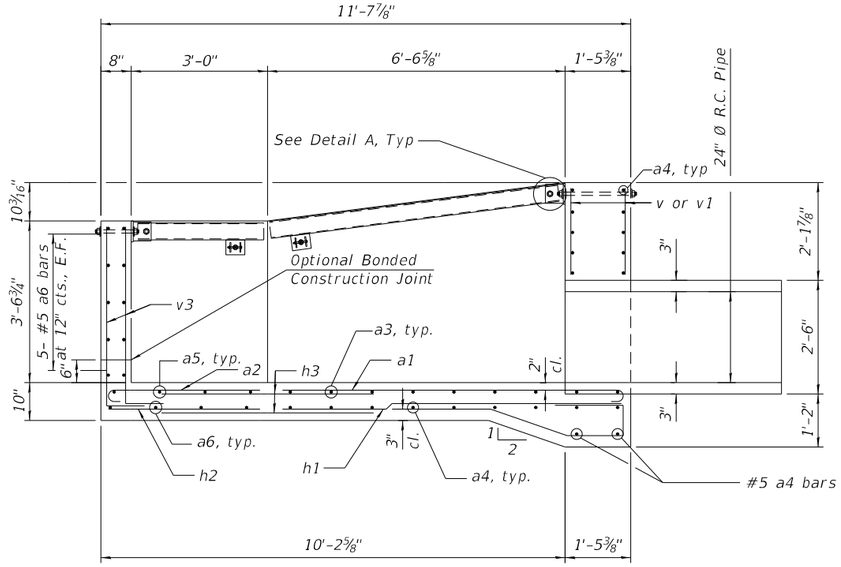

SECTION B-B

(Dimensions along ℄ Drop Box)

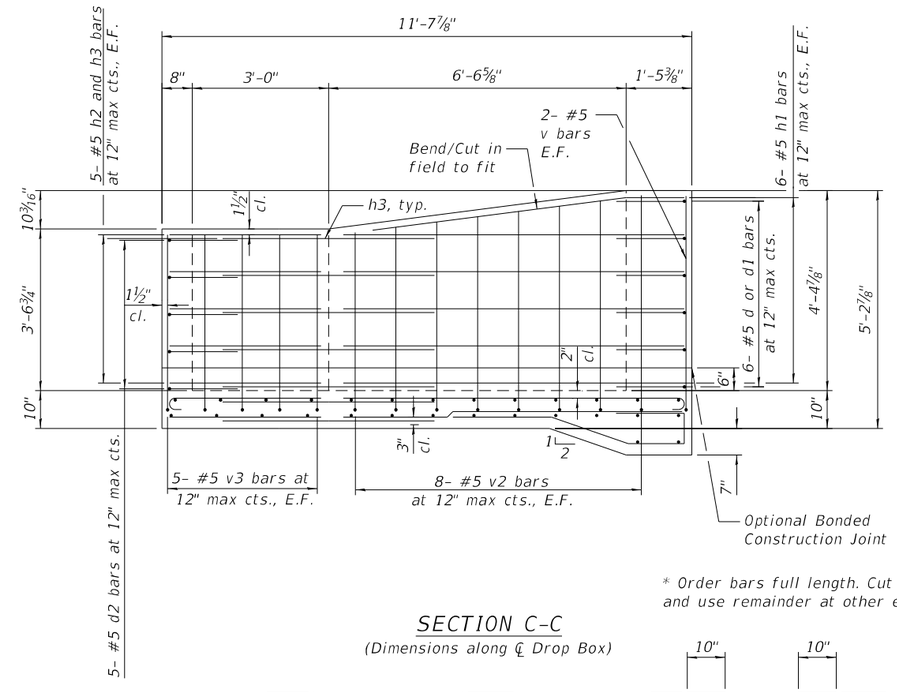

SECTION C-C

(Dimensions along ℄ Drop Box)

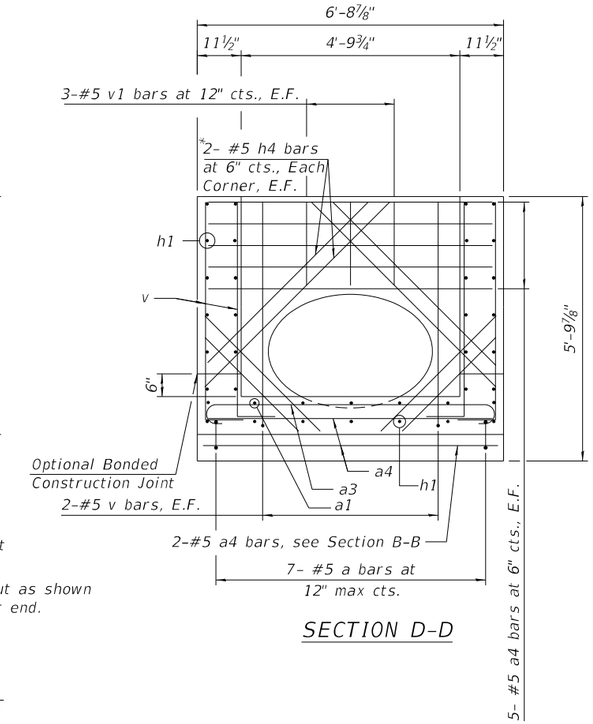

* Order bars full length. Cut as shown and use remainder at other end.

SECTION D-D

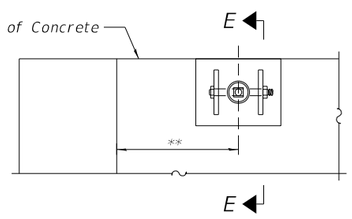

DETAIL A

** See Plan view for spacing

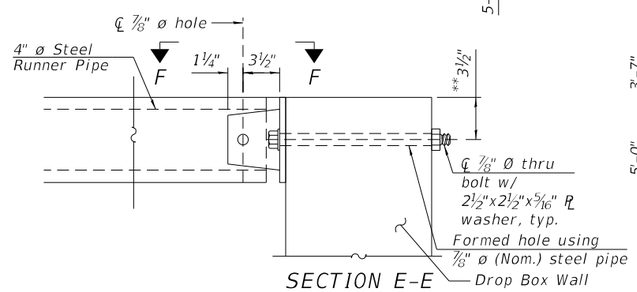

SECTION E-E

**Measured perpendicular to top of wall. In addition, formed hole shall be located at a min. of 6" measured horizontally from any vertical joints necessary for construction of the culvert drop box.

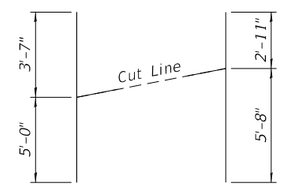

BAR h4*

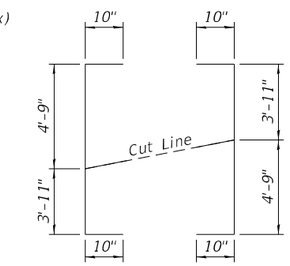

BAR v2

Order bars full length. Cut as shown and use remainder of bars in opposite face

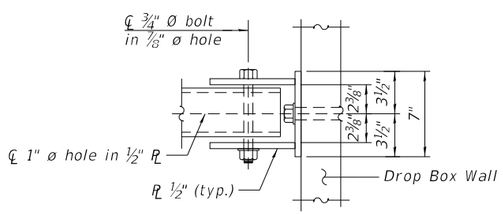

VIEW F-F

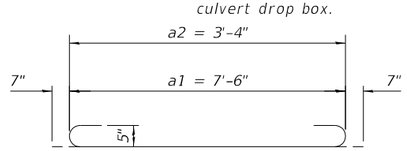

BAR a1 and a2

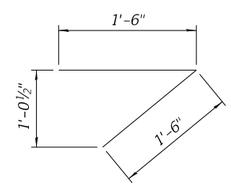

BAR d

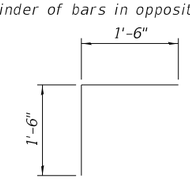

BAR d2

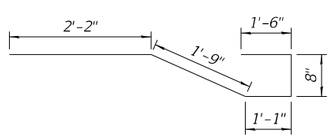

BAR a

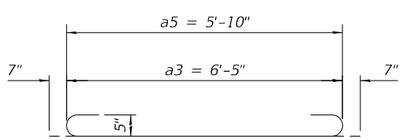

BAR a3 and a5

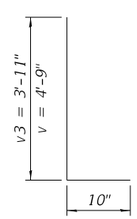

BAR v and v3

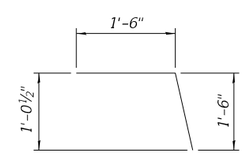

BAR d1

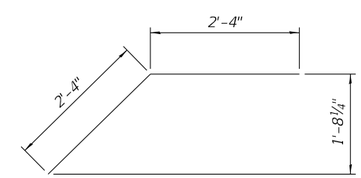

BAR h3

BILL OF MATERIAL

	Bar	No.	Size	Length	Shape
	a	7	#5	7'-2"	
	a1	7	#5	8'-1"	
	a2	7	#5	3'-11"	
	a3	9	#5	7'-7"	
	a4	21	#5	6'-5"	
	a5	4	#5	7'-0"	
	a6	14	#5	5'-10"	
	h1	31	#5	7'-6"	
	h2	27	#5	3'-4"	
	h3	34	#5	4'-8"	
	h4	8	#5	8'-7"	
	d	6	#5	3'-0"	
	d1	6	#5	3'-0"	
	d2	10	#5	3'-0"	
	v	8	#5	5'-7"	
	v1	6	#5	1'-10"	
	v2	16	#5	10'-3"	
	v3	32	#5	4'-9"	
**	Reinforcement Bars			Pound	2,310
**	Concrete Structures			Cu Yd	5.3
***	4" Galv. Steel Pipe			2 @	2'-0"
***	4" Galv. Steel Pipe			1 @	4'-6"
***	4" Galv. Steel Pipe			1 @	4'-3"
***	4" Galv. Steel Pipe			1 @	4'-0"
***	4" Galv. Steel Pipe			1 @	2'-9"
***	Side Assembly			Each	9

** Included in Drop Box No. 9

*** Included in Traversable Pipe Grate, Special with all hardware and steel for Assemblies

FILE NAME: pw:\\rsandh-pw.bentley.com:rsandh-pw-01\Documents\Transportation\Projects\1130055.000 US 20 Stockton\CADD\Structures\XXXXXX1-D264B40_sht_002_DropBoxDetails

RS&H

USER NAME = LorrL	DESIGNED - BPK	REVISED -
	DRAWN - JVS	REVISED -
PLOT SCALE =	CHECKED - JIK	REVISED -
PLOT DATE = 7/11/2024	DATE - 6/24/2022	REVISED -

STATE OF ILLINOIS
DEPARTMENT OF TRANSPORTATION

CULVERT DROP BOX DETAILS
DROP BOX NO.9

SHEET NO. 2 OF 2 SHEETS

F.A.P. RTE.	SECTION	COUNTY	TOTAL SHEETS	SHEET NO.
301	24R	JO DAVIESS	594	324

CONTRACT NO. 64B40

ILLINOIS | FED. AID PROJECT

TOTAL BILL OF MATERIAL

ITEM	UNIT	TOTAL
Stone Riprap, Class A4	Sq. Yd.	53
Filter Fabric	Sq. Yd.	53
Cast-In-Place Reinforced Concrete End Section 48"	Each	1
Traversable Pipe Grate, Special	Foot	63

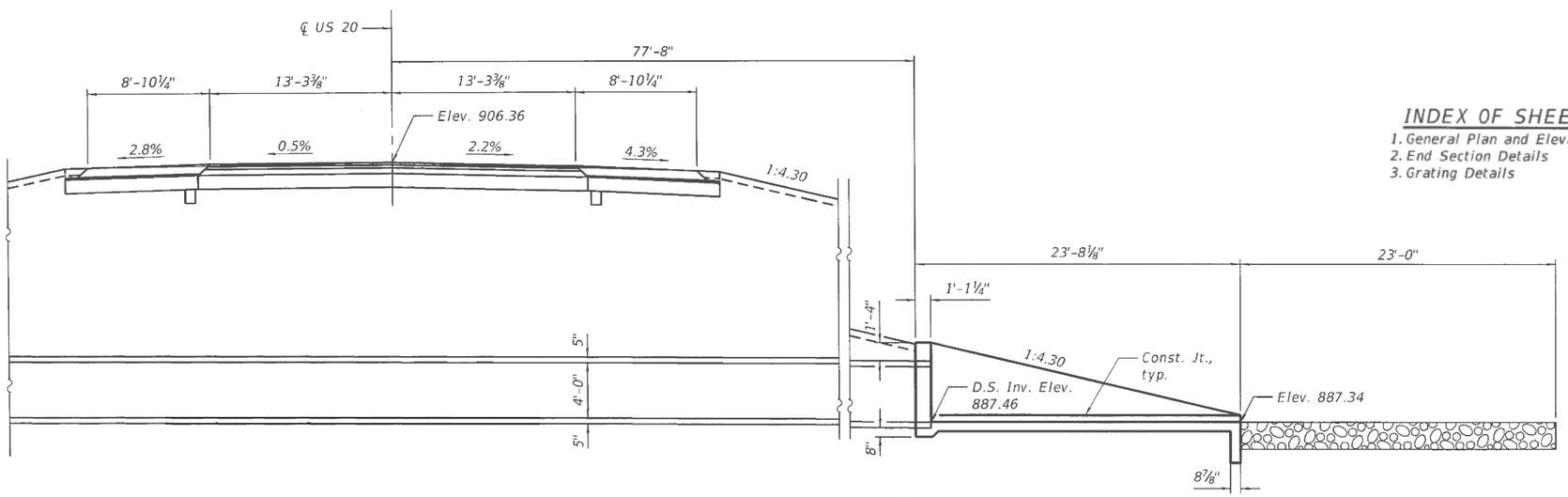

LONGITUDINAL SECTION

(Looking East)
(Dimensions Measured along ℄ of Culvert)

INDEX OF SHEETS

1. General Plan and Elevation
2. End Section Details
3. Grating Details

GENERAL NOTES

Reinforcement bars shall conform to the requirements of ASTM A 706 Gr 60.

All exposed concrete edges shall be chamfered ¾" unless otherwise noted.

All construction joints shall be bonded.

Layout of the slope protection system may be varied to suit ground conditions in the field as directed by the engineer.

DESIGN SPECIFICATIONS

2020 AASHTO LRFD Bridge Design Specifications, 9th Edition

DESIGN STRESSES

FIELD UNITS

f'c = 3,500 psi
fy = 60,000 psi (Reinforcement)
fy = 50,000 psi (M270 Grade 50)

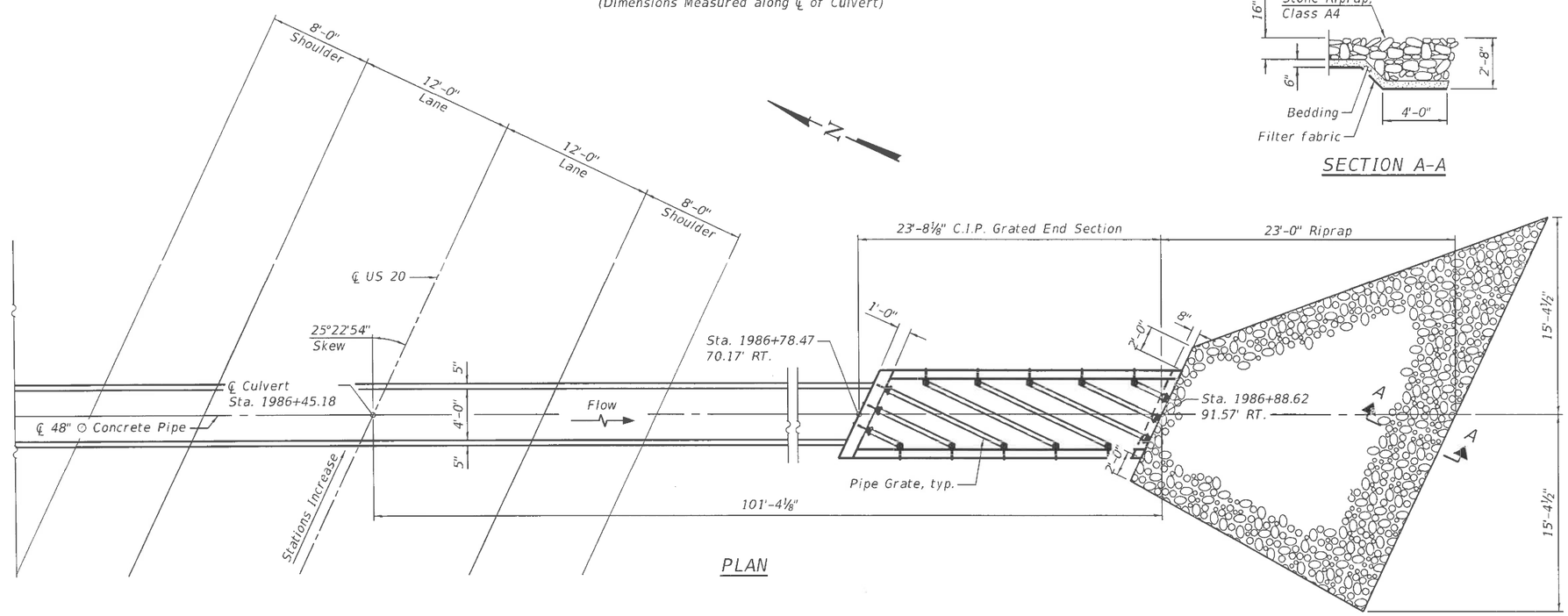

PLAN

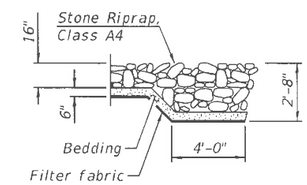

SECTION A-A

KEITH W. BENTING
STATE OF ILLINOIS
4777
DECATUR, ILLINOIS
LICENSED STRUCTURAL ENGINEER

Keith W. Benting 7/8/2022
Keith W. Benting, Illinois S.E. 081-004777 Date
Expires 11/30/2022

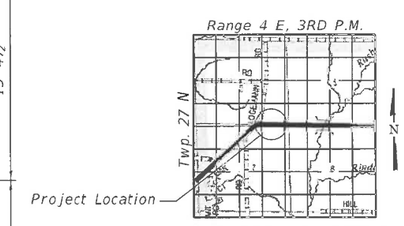

LOCATION SKETCH

GENERAL PLAN & ELEVATION
US ROUTE 20 OVER UN-NAMED TRIBUTARY
F.A.P. 301 (US 20) SECTION 24R
JO DAVIESS COUNTY
STATION 1986+45.18
STRUCTURE NO. 043-1102

QUIGG ENGINEERING INC	USER NAME = zdavidson	DESIGNED - KWB	REVISED -
	0431102_sht_001_GPE	CHECKED - ZLD	REVISED -
	PLOT SCALE = 10:0.0000 ':" / in.	DRAWN - ZLD	REVISED -
	PLOT DATE =	CHECKED - RPW	REVISED -

STATE OF ILLINOIS
DEPARTMENT OF TRANSPORTATION

GENERAL PLAN AND ELEVATION CAST-IN-PLACE REINFORCED CONCRETE END SECTION 48" - STA 1986+45.18

SHEET 1 OF 3 SHEETS

F.A.P. RTE.	SECTION	COUNTY	TOTAL SHEETS	SHEET NO.
301	24R	JO DAVIESS	594	325
		CONTRACT NO. 64B40		
	ILLINOIS	FED. AID PROJECT		

MODEL: Default
FILE NAME: pw:\\rsandh-pw.bentley.com:rsandh-pw-01\Documents\Transportation\Projects\1130059.000 US 20 Stockton\CAD\Design\Working Files\ZLD\0431102_sht_001_GPE
3/23/2022 3:29:56 PM

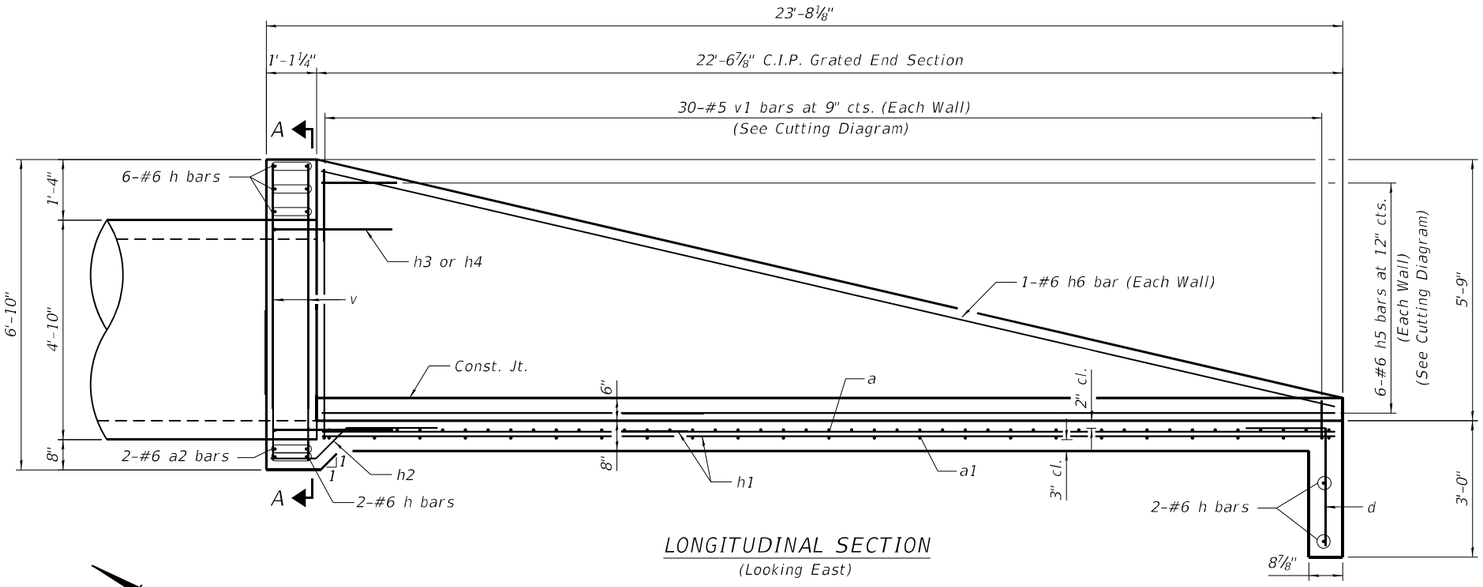

LONGITUDINAL SECTION

(Looking East)

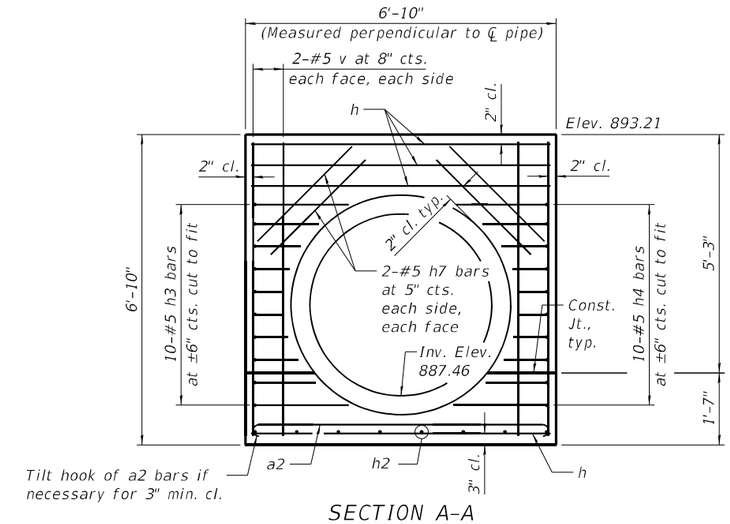

SECTION A-A

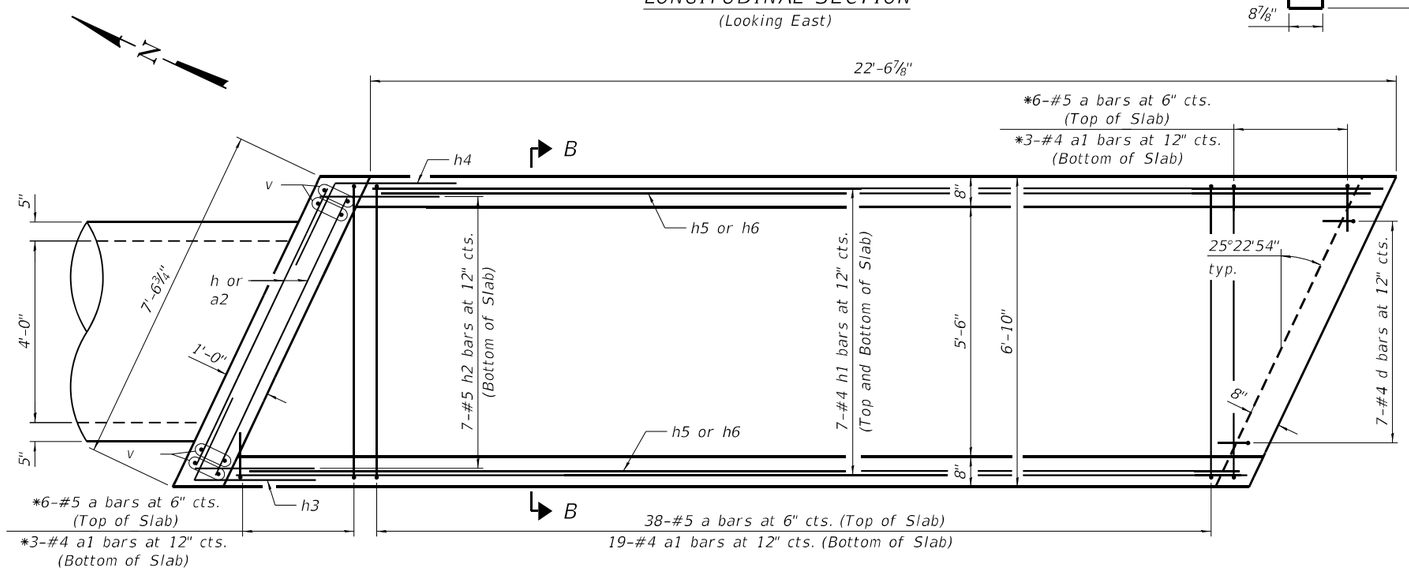

PLAN

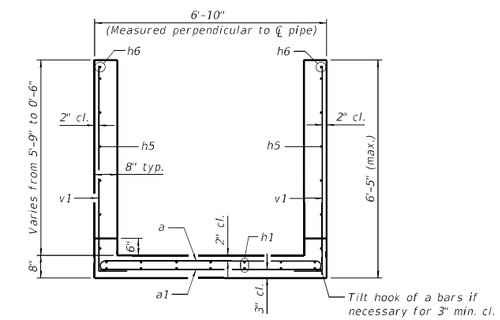

SECTION B-B

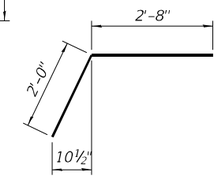

BAR h4

* Order a and a1 bars full length. Cut to fit skew and use remainder in other end.

BILL OF MATERIAL

	Bar	No.	Size	Length	Shape
	a	44	#5	7'-8"	
	a1	22	#4	6'-6"	
	a2	2	#6	8'-5"	
	d	7	#4	4'-4"	
	h	10	#6	7'-1"	
	h1	14	#4	22'-3"	
	h2	7	#5	3'-10"	
	h3	10	#5	4'-8"	
	h4	10	#5	4'-8"	
	h5	6	#6	23'-3"	
	h6	2	#6	22'-10"	
	h7	8	#5	3'-0"	
	v	8	#5	6'-5"	
	v1	30	#5	8'-8"	

	Item	Unit	Total
**	Reinforcement Bars	Pound	1570
**	Concrete Structures	Cu. Yd.	9
***	4" Galv. Steel Pipe	2 @	3'-0"
***	4" Galv. Steel Pipe	1 @	6'-4"
***	4" Galv. Steel Pipe	1 @	6'-8"
***	4" Galv. Steel Pipe	1 @	9'-8"
***	4" Galv. Steel Pipe	1 @	10'-4"
***	4" Galv. Steel Pipe	2 @	11'-8"
***	Side Assembly	Each	16

** Included in Cast in Place Reinforced Concrete End Section **48"**

*** Included in Traversable Pipe Grate, Special with all hardware and steel for Assemblies

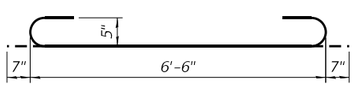

BAR a

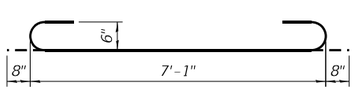

BAR a2

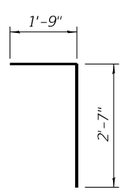

BAR d

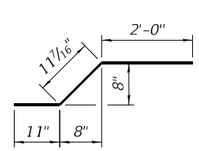

BAR h2

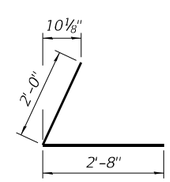

BAR h3

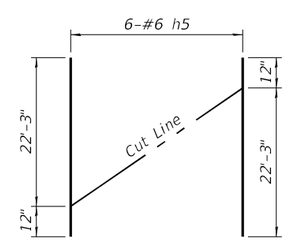

BAR h5 FIELD CUTTING DIAGRAM

(Cut bars as shown. Use remainder in opposite wall.)

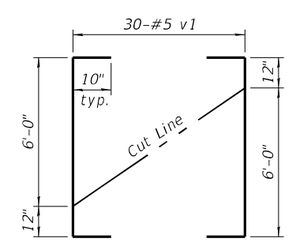

BAR v1 FIELD CUTTING DIAGRAM

(Cut bars as shown. Use remainder in opposite wall.)

MODEL: Default
FILE NAME: pw:\\randh-pw.bentley.com:randh-pw-01\Documents\Transportation\Projects\1130059.000 US 20 Stockton\CAD\Design\Working Files\ZLD\0431102_sht_002_CulvertDetails
3/23/2022 3:30:02 PM

QUIGG ENGINEERING INC

USER NAME = zdavidson	DESIGNED - KWB	REVISED -	
0431102_sht_002_CulvertDetails	CHECKED - ZLD	REVISED -	
PLOT SCALE = 3:4.0000 ':" / in.	DRAWN - ZLD	REVISED -	
PLOT DATE =	CHECKED - RPW	REVISED -	

STATE OF ILLINOIS
DEPARTMENT OF TRANSPORTATION

END SECTION DETAILS CAST-IN-PLACE
REINFORCED CONCRETE END SECTION 48" - STA 1986+45.18

SHEET 2 OF 3 SHEETS

F.A.P. RTE.	SECTION	COUNTY	TOTAL SHEETS	SHEET NO.
301	24R	JO DAVIESS	594	326
		CONTRACT NO. 64B40		
	ILLINOIS	FED. AID PROJECT		

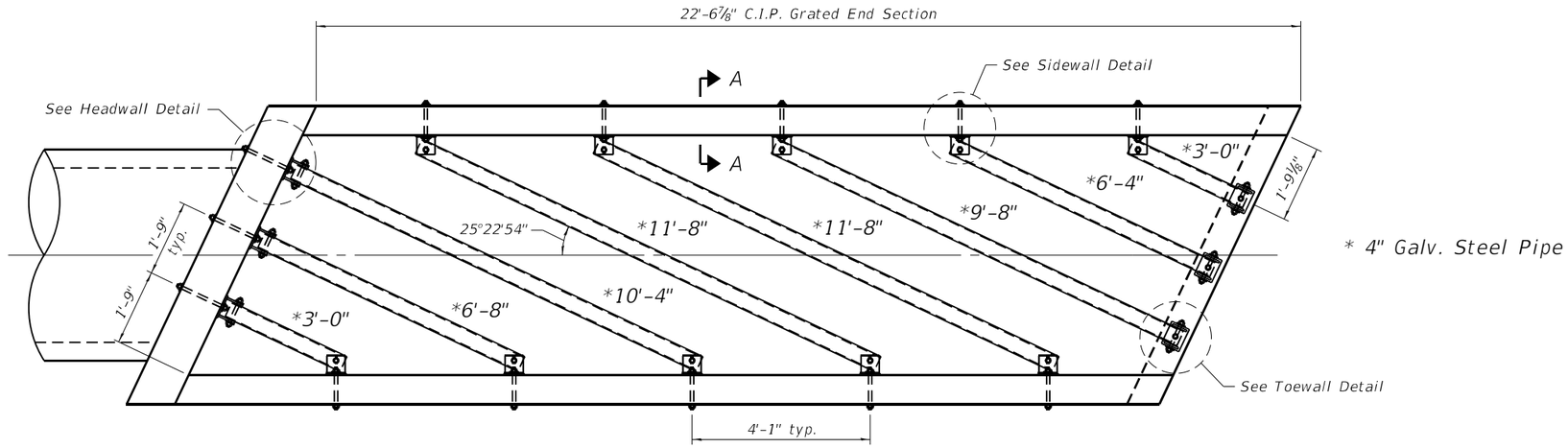

* 4" Galv. Steel Pipe

PLAN

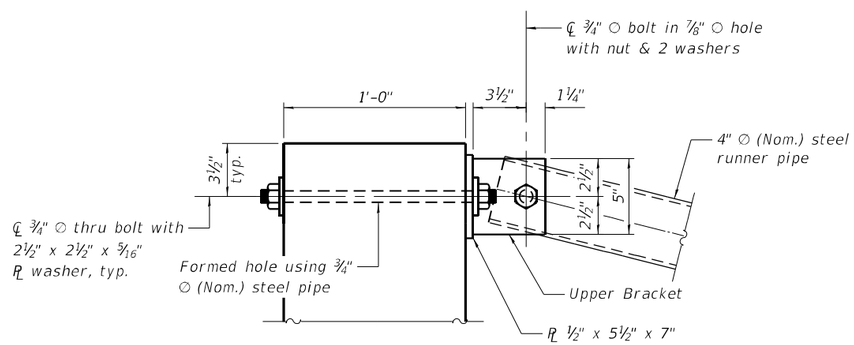

HEADWALL DETAIL

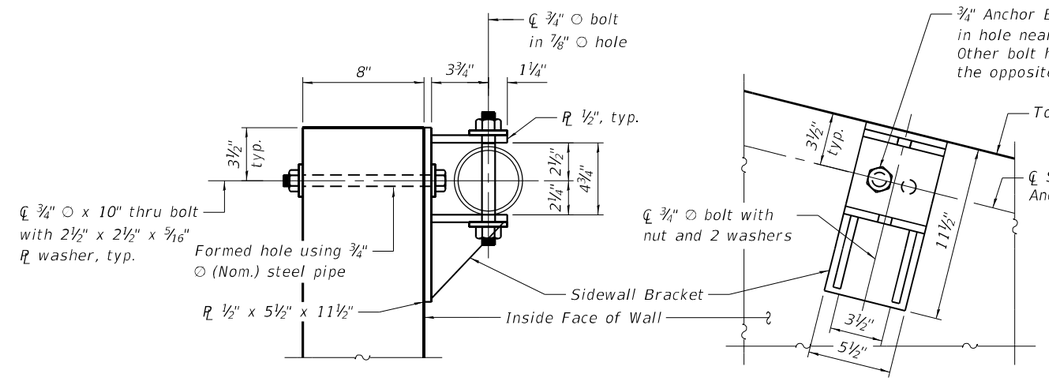

SECTION A-A
(Showing installed bracket)

ELEVATION
(Showing installed bracket normal to wall. Pipe not shown for clarity.)

SIDEWALL ATTACHMENT DETAILS

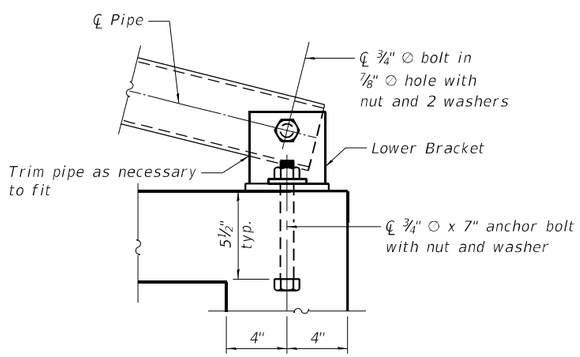

TOEWALL DETAIL

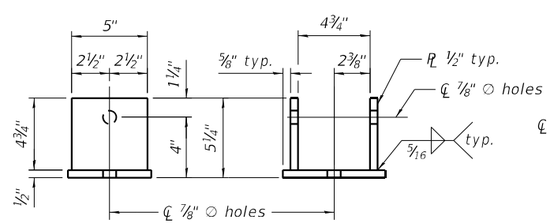

SIDE VIEW ELEVATION

UPPER & LOWER BRACKET DETAIL

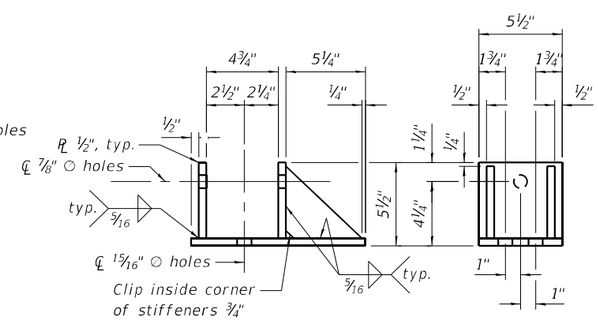

ELEVATION SIDE VIEW

SIDEWALL BRACKET DETAILS

GRATING NOTES

Grating shall include the pipes, brackets, and hardware as shown and shall be included in the contract unit price per foot for Traversable Pipe Grate, Special.

Steel pipes shall conform to ASTM A53, Grade B, Schedule 40, and shall be galvanized conforming to ASTM A120.

Brackets shall conform to AASHTO M-183 and shall be galvanized conforming to AASHTO M-111.

Bolts, nuts, and washers shall be in accordance with Article 1006.08 of the Standard Specifications and shall be galvanized.

The inorganic zinc rich primer/acrylic/acrylic paint system shall be used for field painting of holes, threads, etc.

Contractor shall field verify galvanized pipe length.

The minimum distance from the center of a hole to the free edge of a structural shape or plate shall be 1½" unless noted otherwise.

Fabrication of the Steel Pipe Grate System shall conform to the requirements in Section 505 of the Standard Specifications unless noted otherwise.

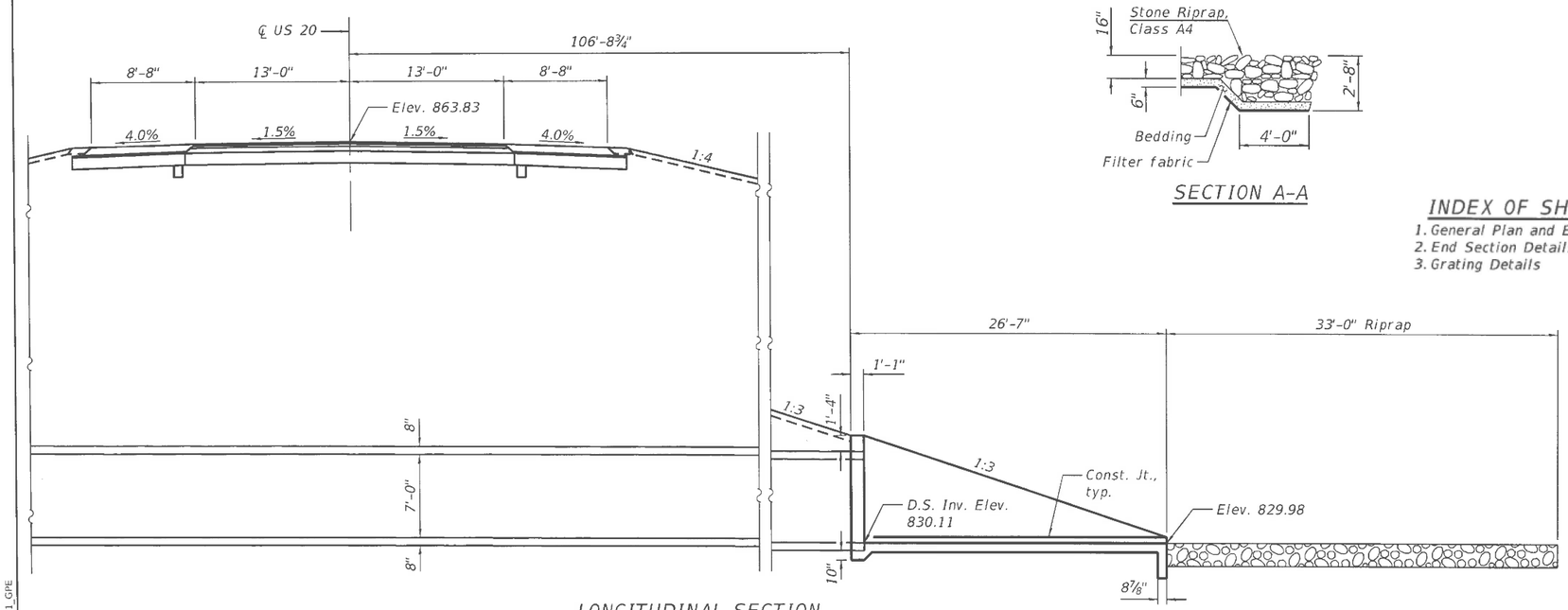

LONGITUDINAL SECTION
(Looking East)
(Dimensions Measured along ℄ of Culvert)

SECTION A-A

INDEX OF SHEETS

TOTAL BILL OF MATERIAL

ITEM	UNIT	TOTAL
Stone Riprap, Class A4	Sq. Yd.	131
Filter Fabric	Sq. Yd.	131
Cast-In-Place Reinforced Concrete End Section 84"	Each	2
Traversable Pipe Grate, Special	Foot	242

GENERAL NOTES

Reinforcement bars shall conform to the requirements of ASTM A 706 Gr 60.

All exposed concrete edges shall be chamfered ¾" unless otherwise noted.

All construction joints shall be bonded.

Layout of the slope protection system may be varied to suit ground conditions in the field as directed by the engineer.

DESIGN SPECIFICATIONS

2020 AASHTO LRFD Bridge Design Specifications, 9th Edition

DESIGN STRESSES

FIELD UNITS

f'c = 3,500 psi
fy = 60,000 psi (Reinforcement)
fy = 50,000 psi (M270 Grade 50)

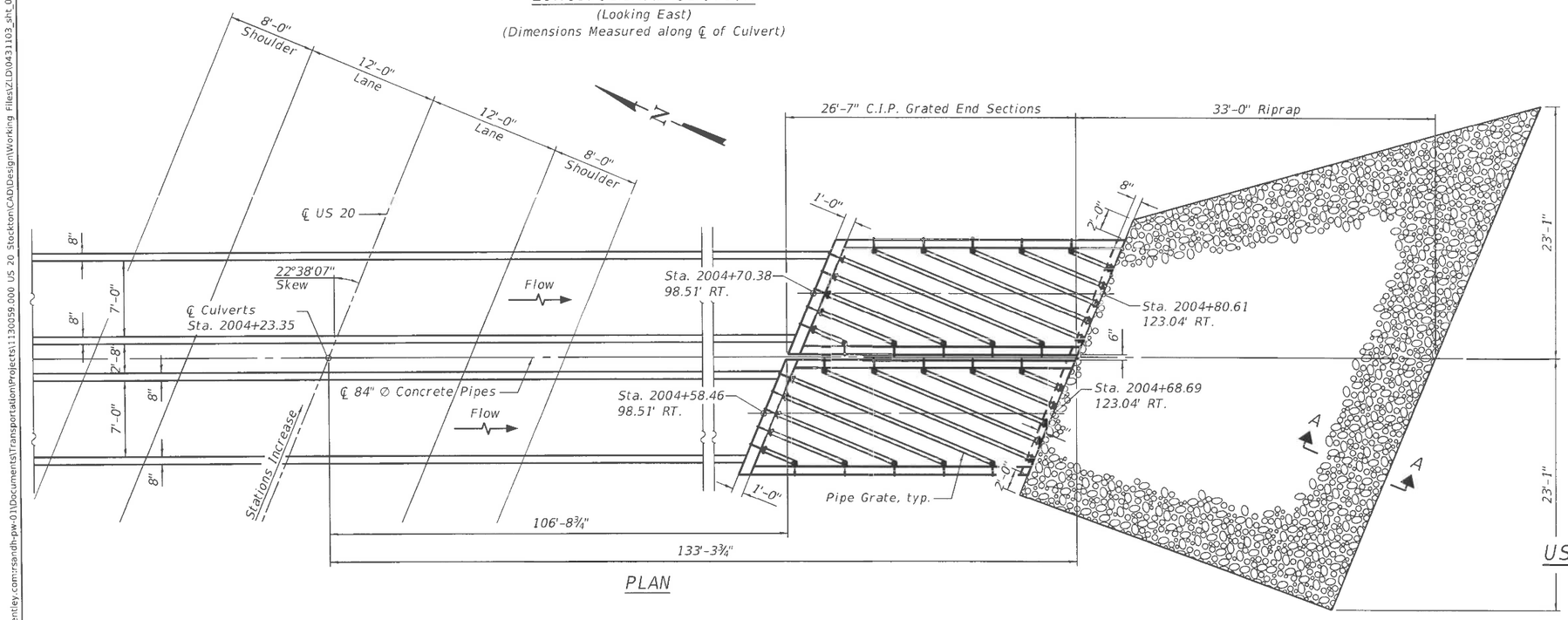

PLAN

KEITH W. BENTING
STATE OF ILLINOIS
4777
DECATUR, ILLINOIS
LICENSED STRUCTURAL ENGINEER

Keith W. Benting 7/8/2022
Keith W. Benting, Illinois S.E. 081-004777 Date
Expires 11/30/2022

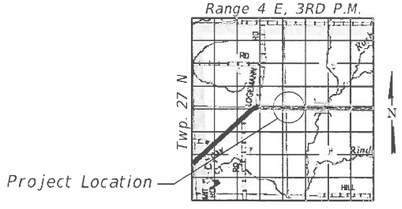

LOCATION SKETCH

GENERAL PLAN & ELEVATION
US ROUTE 20 OVER UN-NAMED TRIBUTARY
F.A.P. 301 (US 20) SECTION 24R
JO DAVIESS COUNTY
STATION 2004+23.35
STRUCTURE NO. 043-1103

QUIGG ENGINEERING INC

USER NAME = zdavidson	DESIGNED - KWB	REVISED -	
0431103_sht_001_GPE	CHECKED - ZLD	REVISED -	
PLOT SCALE = 11:7.9999 ':" / in.	DRAWN - ZLD	REVISED -	
PLOT DATE =	CHECKED - RPW	REVISED -	

STATE OF ILLINOIS
DEPARTMENT OF TRANSPORTATION

GENERAL PLAN AND ELEVATION CAST-IN-PLACE
REINFORCED CONCRETE END SECTION 84" - STA 2004+23.35
SHEET 1 OF 3 SHEETS

F.A.P. RTE.	SECTION	COUNTY	TOTAL SHEETS	SHEET NO.
301	24R	JO DAVIESS	594	328
		CONTRACT NO. 64B40		
	ILLINOIS	FED. AID PROJECT		

MODEL: Default
FILE NAME: pw:\\rsandh-pw.bentley.com:rsandh-pw-01\Documents\Transportation\Projects\1130059.000 US 20 Stockton\CAD\Design\Working Files\ZLD\0431103_sht_001_GPE
3/23/2022 3:31:13 PM

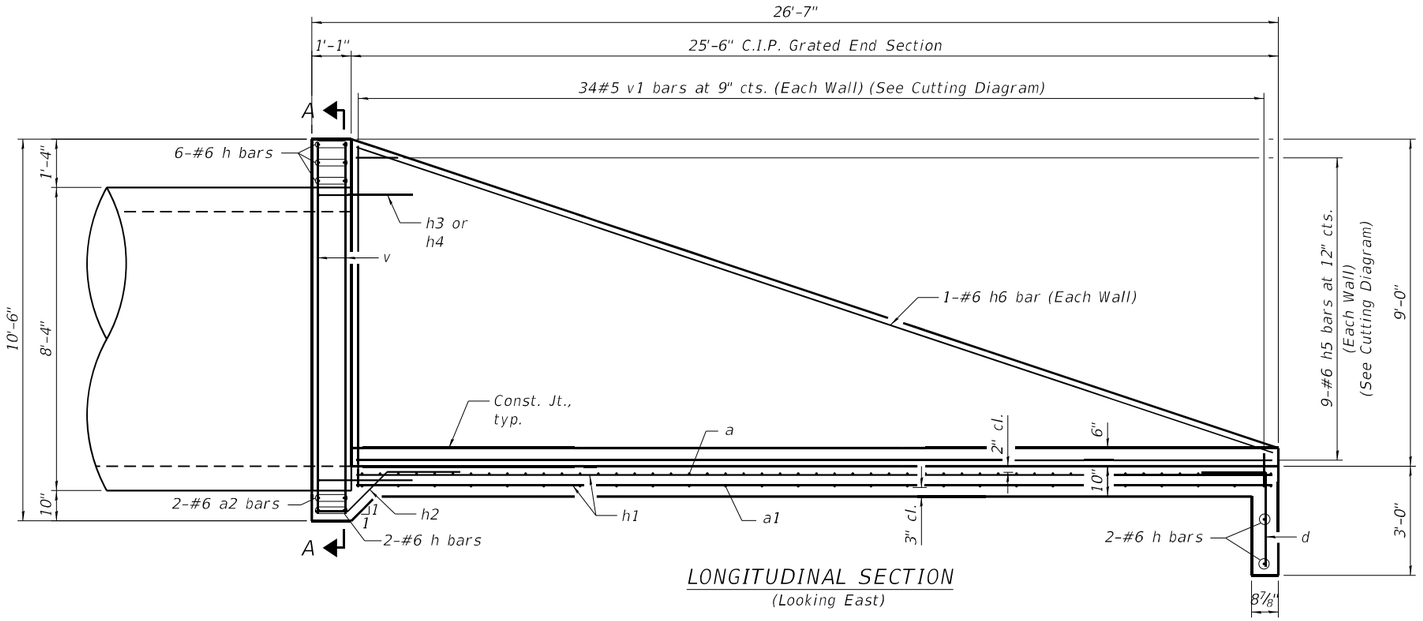

LONGITUDINAL SECTION
(Looking East)

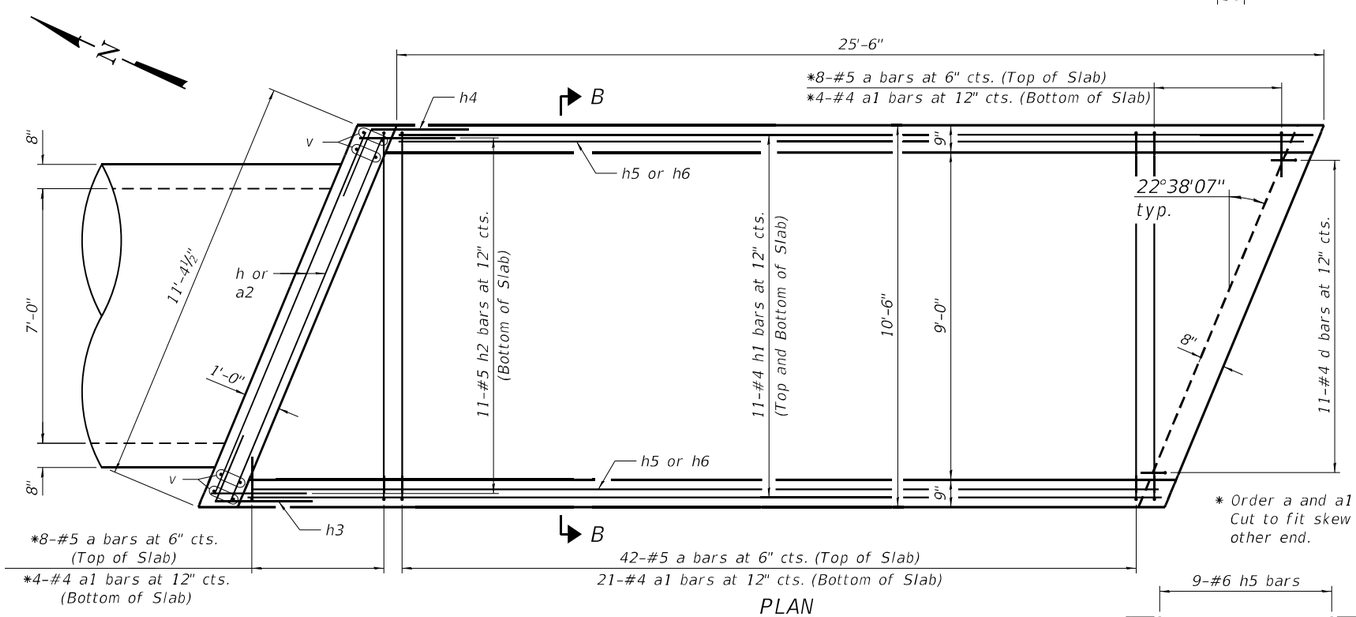

PLAN

* Order a and a1 bars full length. Cut to fit skew and use remainder in other end.

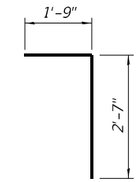

BAR d

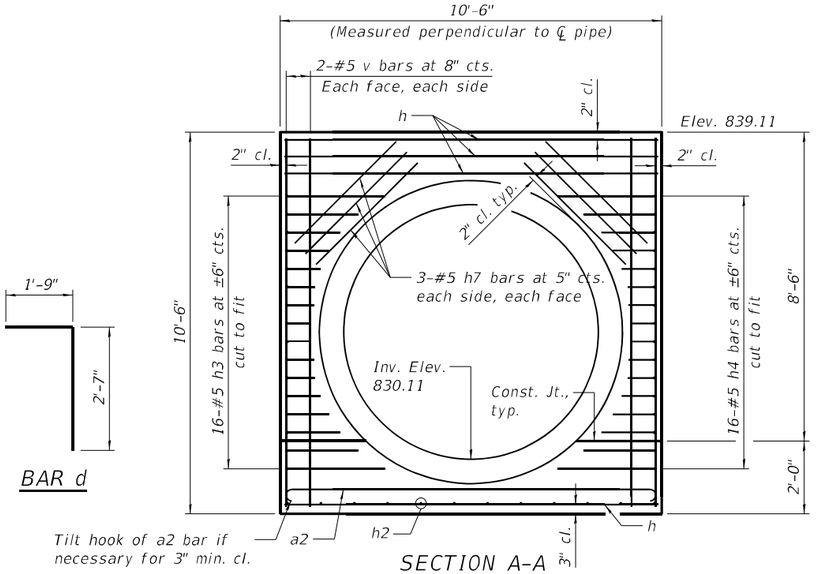

SECTION A-A

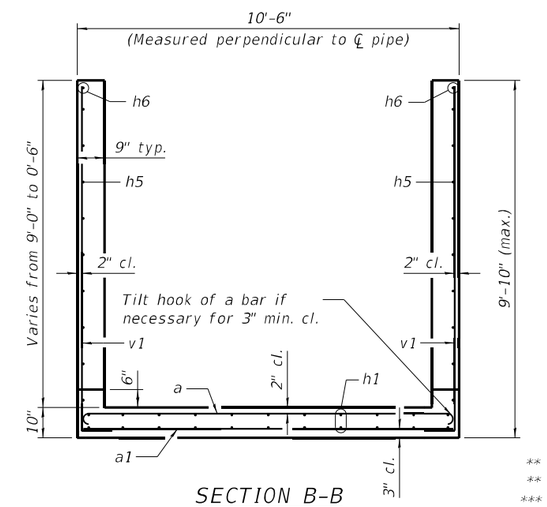

SECTION B-B

BILL OF MATERIAL
(2 End Sections)

Bar	No.	Size	Length	Shape
a	100	#5	11'-4"	
a1	50	#4	10'-2"	
a2	4	#6	12'-3"	
d	22	#4	4'-4"	
h	20	#6	10'-11"	
h1	44	#4	25'-2"	
h2	22	#5	4'-5"	
h3	32	#5	6'-0"	
h4	32	#5	6'-0"	
h5	18	#6	26'-2"	
h6	4	#6	26'-6"	
h7	24	#5	4'-0"	
v	16	#5	10'-1"	
v1	68	#5	12'-1"	

	Item	Unit	Total
**	Reinforcement Bars	Pound	5230
**	Concrete Structures	Cu. Yd.	37
***	4" Galv. Steel Pipe	2 @	3'-5"
***	4" Galv. Steel Pipe	2 @	4'-2"
***	4" Galv. Steel Pipe	2 @	7'-8"
***	4" Galv. Steel Pipe	2 @	8'-3"
***	4" Galv. Steel Pipe	2 @	11'-10"
***	4" Galv. Steel Pipe	2 @	12'-2"
***	4" Galv. Steel Pipe	2 @	16'-0"
***	4" Galv. Steel Pipe	2 @	16'-3"
***	4" Galv. Steel Pipe	4 @	20'-4"
***	Side Assembly	Each	40

** Included in Cast in Place Reinforced Concrete End Section 84"

*** Included in Traversable Pipe Grate, Special with all hardware and steel for Assemblies

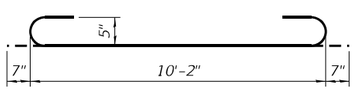

BAR a

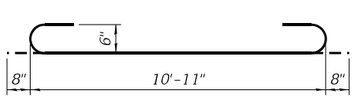

BAR a2

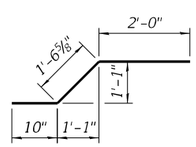

BAR h2

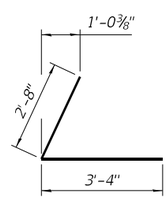

BAR h3

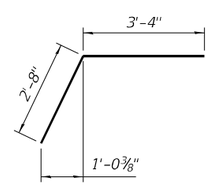

BAR h4

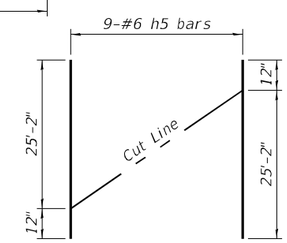

BAR h5(E) FIELD CUTTING DIAGRAM
(Cut bars as shown.
Use remainder in opposite wall.)

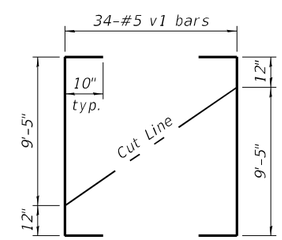

BAR v1(E) FIELD CUTTING DIAGRAM
(Cut bars as shown.
Use remainder in opposite wall.)

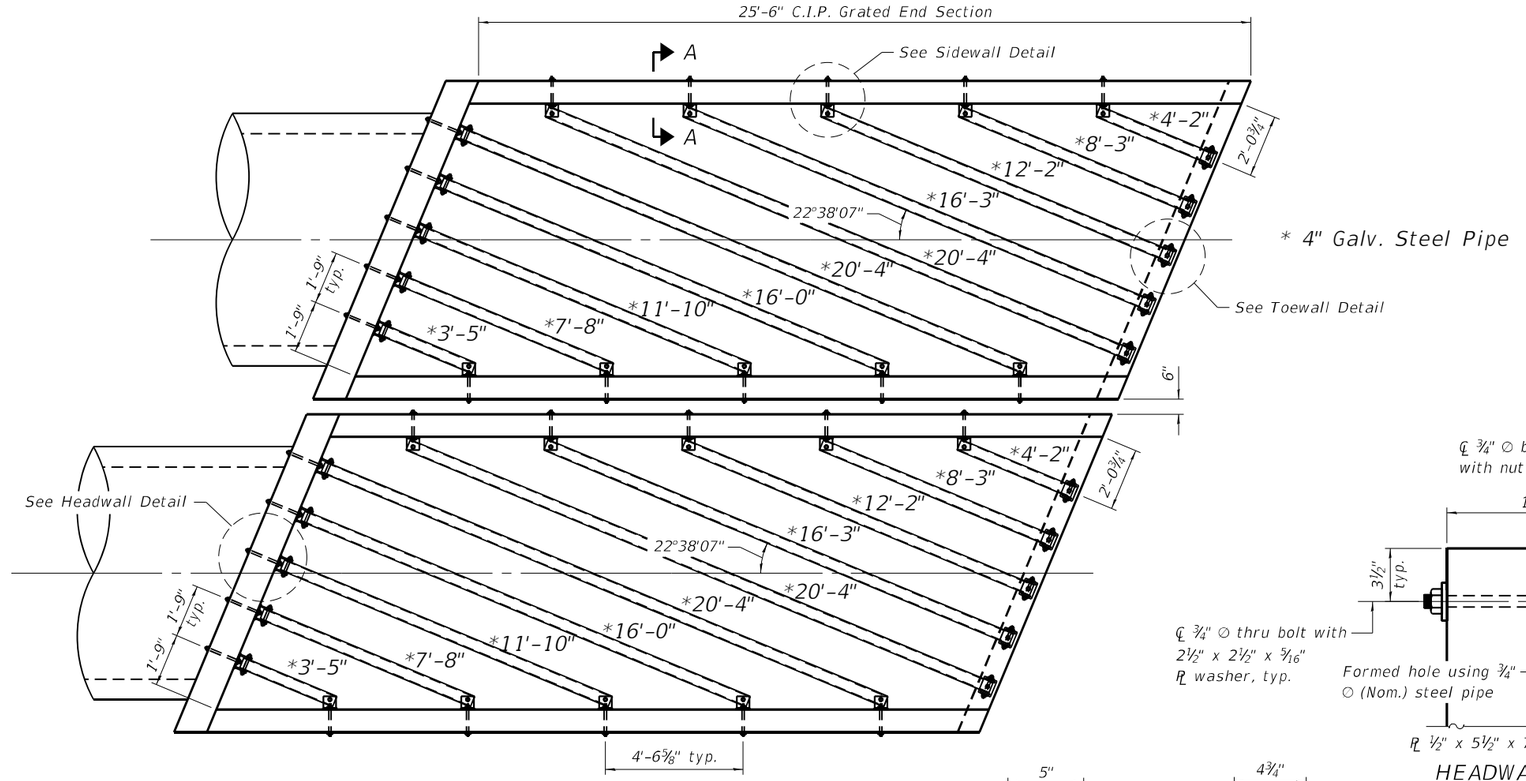

PLAN

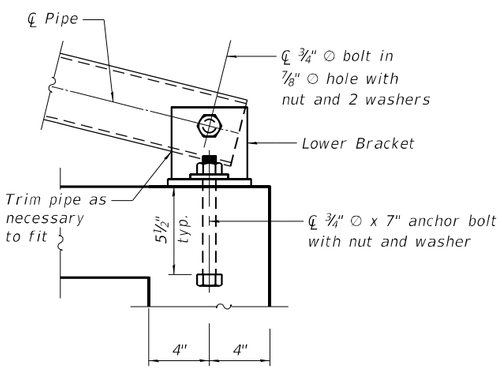

TOEWALL DETAIL

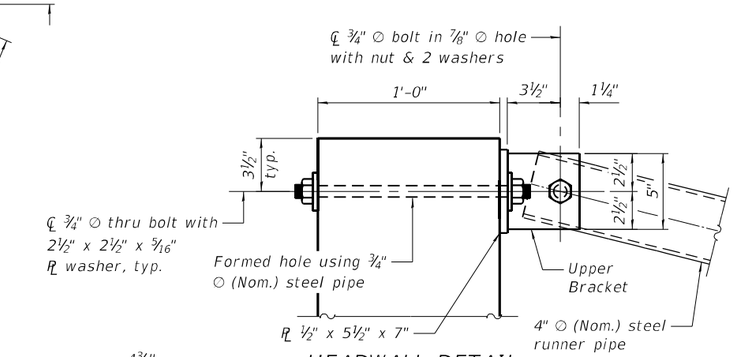

HEADWALL DETAIL

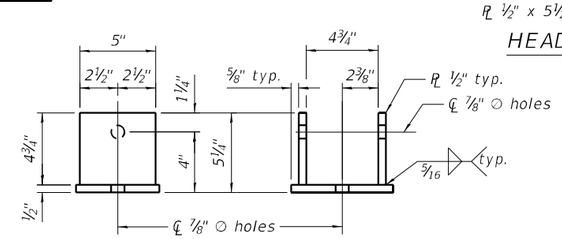

SIDE VIEW ELEVATION

UPPER & LOWER BRACKET DETAIL

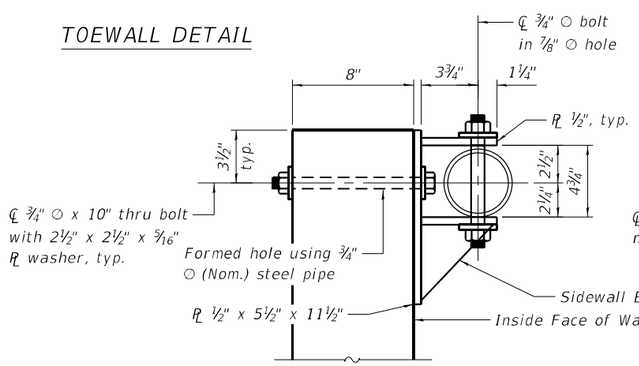

SECTION A-A

(Showing installed bracket)

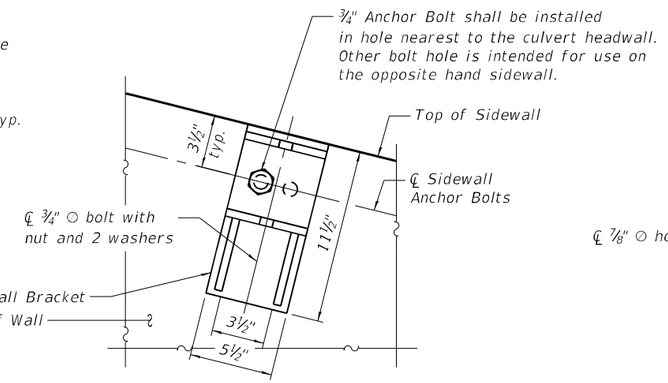

ELEVATION

(Showing installed bracket normal to wall. Pipe not shown for clarity.)

SIDEWALL ATTACHMENT DETAILS

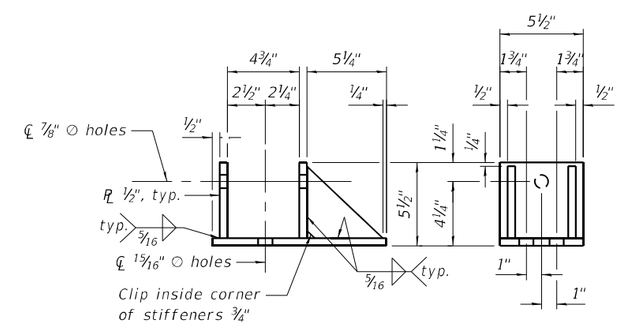

ELEVATION SIDE VIEW

SIDEWALL BRACKET DETAIL

GRATING NOTES

Grating shall include the pipes, brackets, and hardware as shown and shall be included in the contract unit price per foot for Traversable Pipe Grate, Special.

Steel pipes shall conform to ASTM A53, Grade B, Schedule 40, and shall be galvanized conforming to ASTM A120.

Brackets shall conform to AASHTO M-183 and shall be galvanized conforming to AASHTO M-111.

Bolts, nuts, and washers shall be in accordance with Article 1006.08 of the Standard Specifications and shall be galvanized.

The inorganic zinc rich primer/acrylic/acrylic paint system shall be used for field painting of holes, threads, etc.

Contractor shall field verify galvanized pipe length.

The minimum distance from the center of a hole to the free edge of a structural shape or plate shall be 1½" unless noted otherwise.

Fabrication of the Steel Pipe Grate System shall conform to the requirements in Section 505 of the Standard Specifications unless noted otherwise.

QUIGG ENGINEERING INC

USER NAME = zdavidson	DESIGNED - KWB	REVISED -	
0431103_sht_003_GratingDetails	CHECKED - ZLD	REVISED -	
PLOT SCALE = 3:4.0000 ':" / in.	DRAWN - ZLD	REVISED -	
PLOT DATE =	CHECKED - RPW	REVISED -	

STATE OF ILLINOIS
DEPARTMENT OF TRANSPORTATION

GRATING DETAILS CAST-IN-PLACE

REINFORCED CONCRETE END SECTION 84" - STA 2004+23.35

SHEET 3 OF 3 SHEETS

F.A.P. RTE.	SECTION	COUNTY	TOTAL SHEETS	SHEET NO.
301	24R	JO DAVIESS	594	330

CONTRACT NO. 64B40

ILLINOIS FED. AID PROJECT

MODEL: Default
FILE NAME: pw:\\rsandh-pw.bentley.com:rsandh-pw01\Documents\Transportation\Projects\1130059.000 US 20 Stockton\CAD\Design\Working Files\ZLD\0431103_sht_003_GratingDetails

3/23/2022 3:31:25 PM

INDEX OF SHEETS

TOTAL BILL OF MATERIAL

ITEM	UNIT	TOTAL
Stone Riprap, Class A4	Sq. Yd.	31
Filter Fabric	Sq. Yd.	31
Cast-In-Place Reinforced Concrete End Section 24"	Each	1
Traversable Pipe Grate, Special	Foot	13

GENERAL NOTES

Reinforcement bars shall conform to the requirements of ASTM A 706 Gr 60.

All exposed concrete edges shall be chamfered ¾" unless otherwise noted.

All construction joints shall be bonded.

Layout of the slope protection system may be varied to suit ground conditions in the field as directed by the engineer.

Any excavation or backfill required for construction of Pipe Culvert End Section shall be included in the contract unit price per Cu. Yd. for Concrete Box Culverts

DESIGN SPECIFICATIONS

2020 AASHTO LRFD Bridge Design Specifications, 9th Edition

DESIGN STRESSES

FIELD UNITS

f'c = 3,500 psi
fy = 60,000 psi (Reinforcement)
fy = 50,000 psi (M270 Grade 50)

JOSEPH KLENCK
081-008344
LICENSED STRUCTURAL ENGINEER
STATE OF ILLINOIS

BY: Joseph Klenck 7/15/2024
LICENSE EXPIRES: 11/30/2024

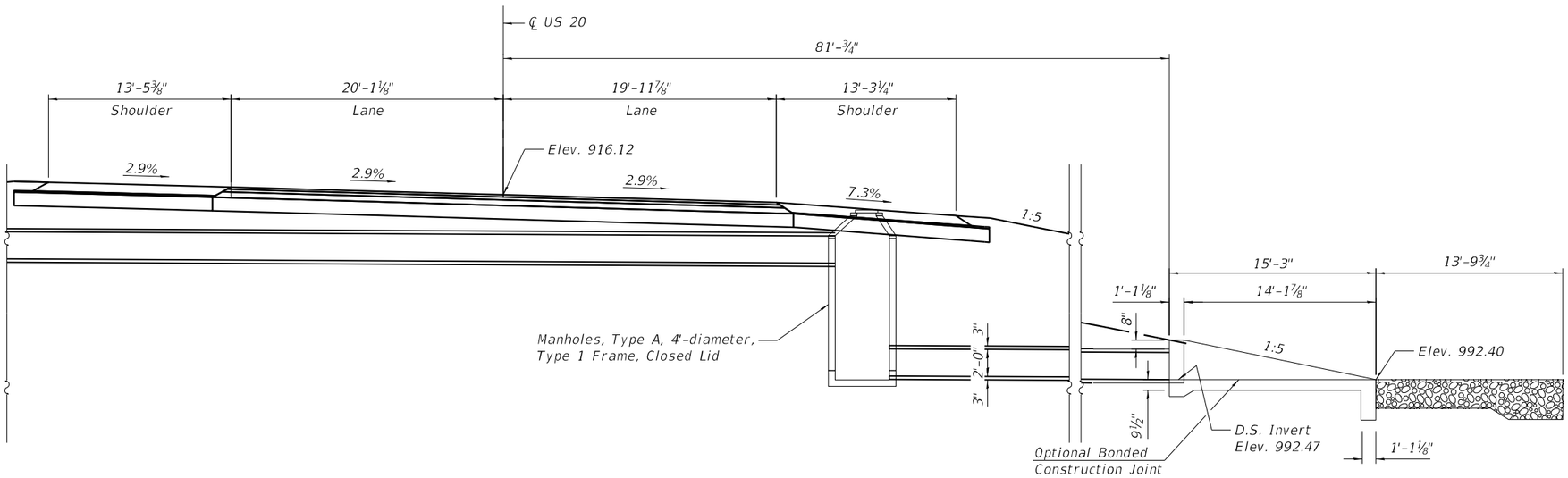

LONGITUDINAL SECTION

(Looking South)
(Dimensions Measured along ℄ of Culvert)

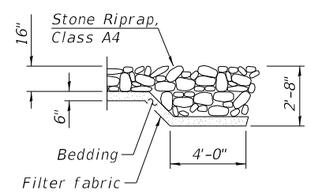

SECTION A-A

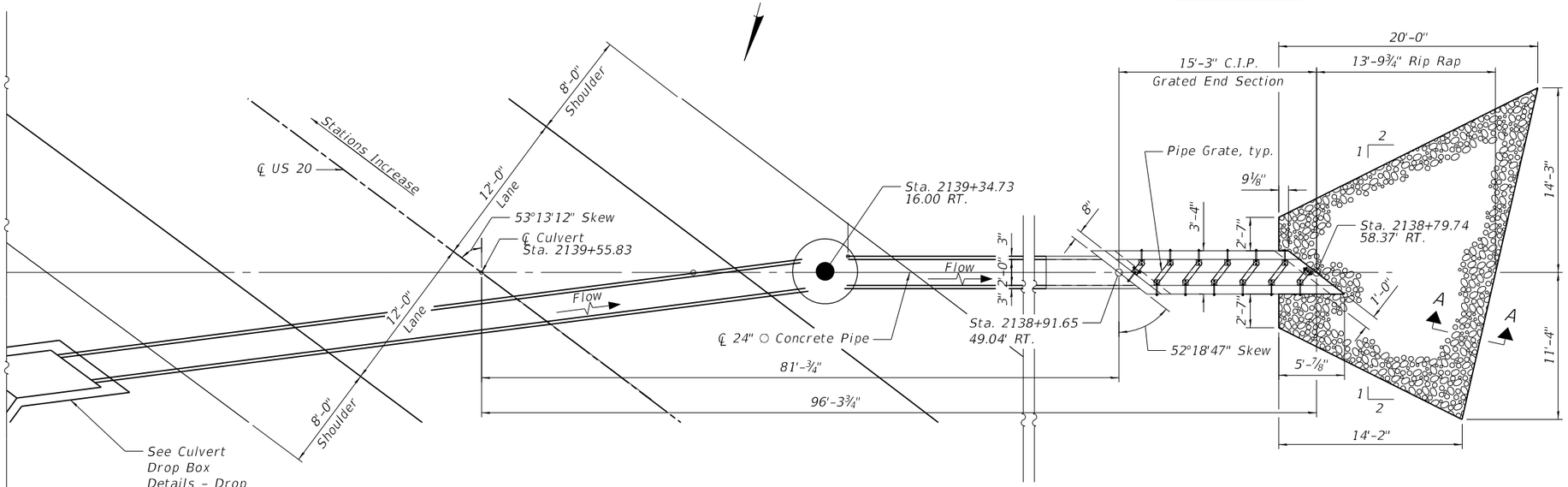

PLAN

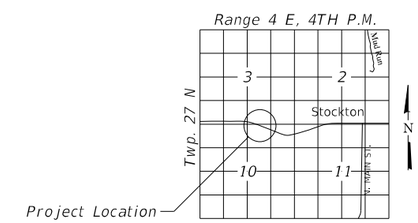

LOCATION SKETCH

GENERAL PLAN & ELEVATION
US ROUTE 20 OVER UN-NAMED TRIBUTARY
F.A.P. 301 (US 20) SECTION 24R
JO DAVIESS COUNTY
STATION 2139+55.83

FILE NAME: pw:\\rsandh-pw.bentley.com:rsandh-pw-d1\Documents\Transportation\Projects\1130059.000 US 20 Stockton\CADD\Structures\XXXXXX2-D264B40_gnl_001.GPE

RS&H	USER NAME = LorrL	DESIGNED - BPK	REVISED -	STATE OF ILLINOIS DEPARTMENT OF TRANSPORTATION	GENERAL PLAN AND ELEVATION CAST-IN-PLACE REINFORCED CONCRETE END SECTION 24" - STA 2139+55.83
		DRAWN - BPK	REVISED -		
	PLOT SCALE =	CHECKED - JIK	REVISED -		
	PLOT DATE = 7/10/2024	DATE - 6/17/2022	REVISED -		SHEET NO. 1 OF 3 SHEETS

F.A.P. RTE.	SECTION	COUNTY	TOTAL SHEETS	SHEET NO.
301	24R	JO DAVIESS	594	331
		CONTRACT NO. 64B40		
		ILLINOIS	FED. AID PROJECT	

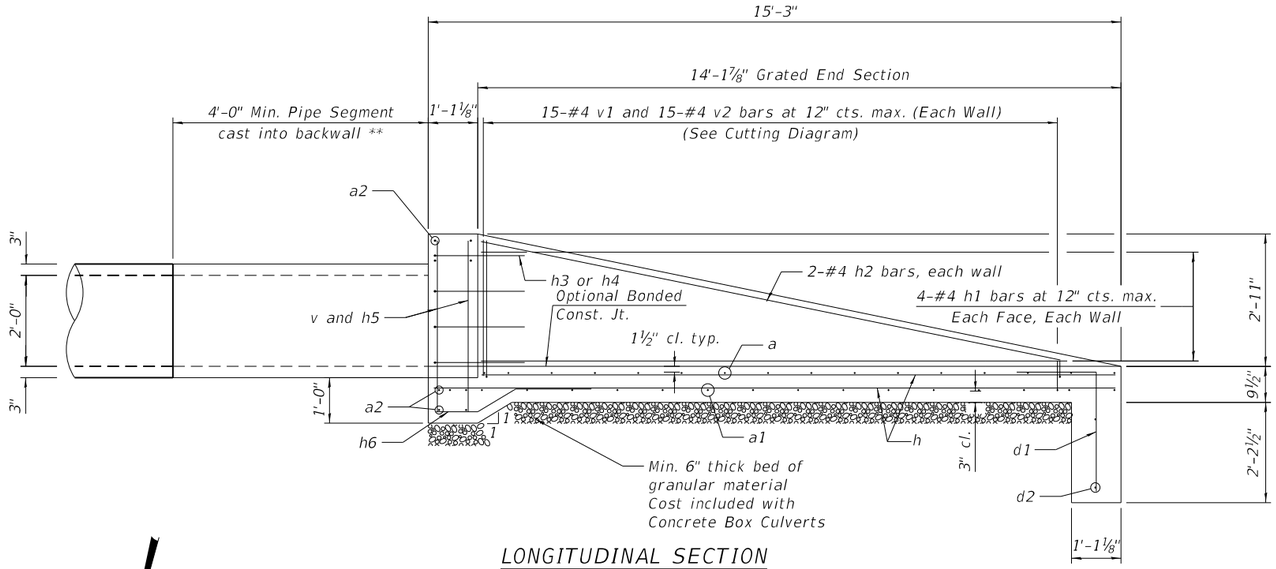

LONGITUDINAL SECTION
(Looking South)

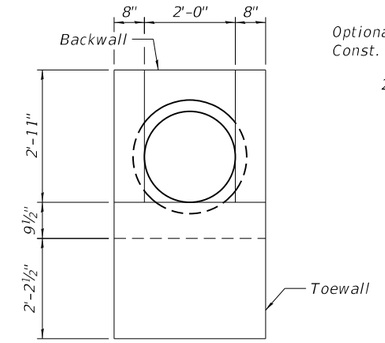

END VIEW
(Showing pipe)

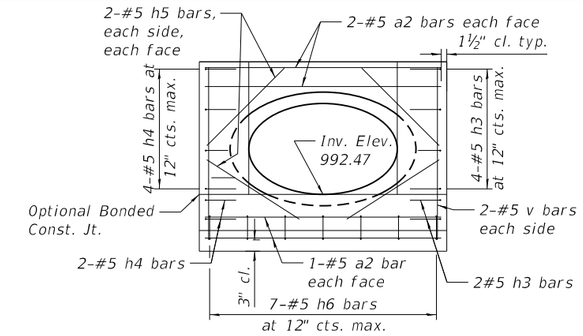

SECTION B-B
(Showing backwall reinforcement for pipes)

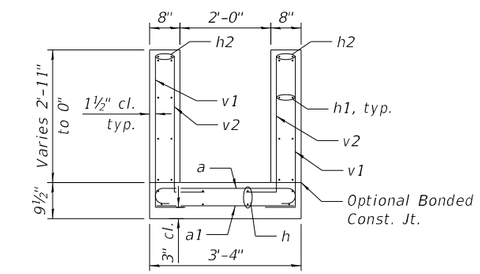

SECTION C-C

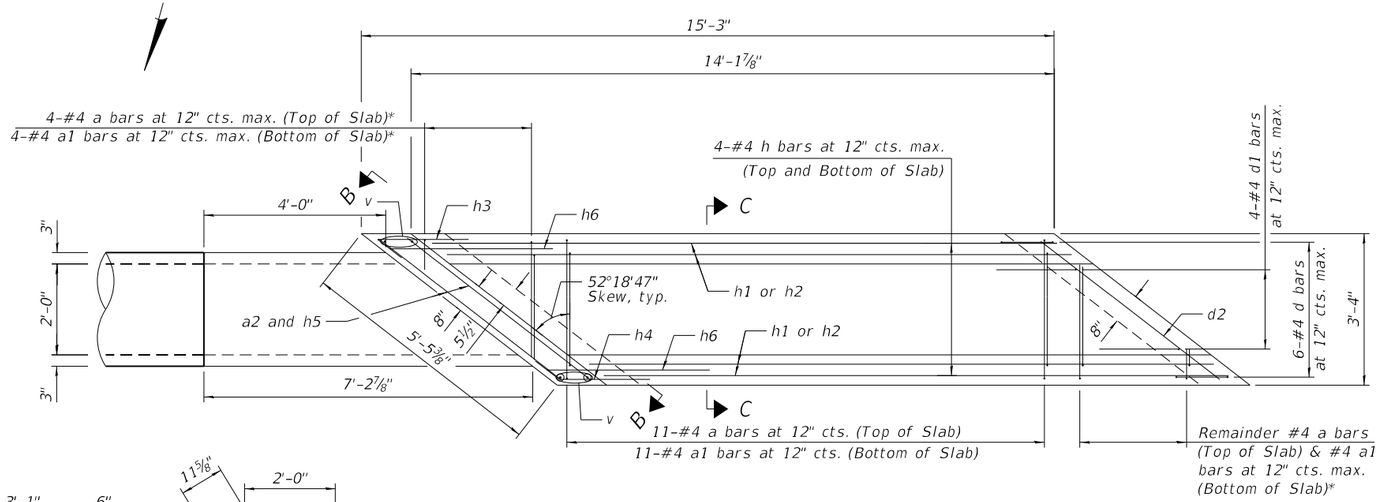

PLAN

* Order a and a1 bars full length. Cut to fit skew and use remainder in other end.

** Segments of pipe culvert shall be joined in accordance with Article 542 of the Standard Specifications.

*** Included in Cast in Place Reinforced Concrete End Section 24"

**** Included in Traversable Pipe Grate, Special with all hardware and steel for Assemblies

BILL OF MATERIAL

Bar	No.	Size	Length	Shape
a	15	#4	4'-1"	
a1	15	#4	3'-1"	
a2	8	#5	5'-2"	
d1	4	#4	4'-4"	
d2	2	#6	5'-0"	
h	8	#4	15'-0"	
h1	4	#4	13'-10"	
h2	4	#4	13'-0"	
h3	6	#5	2'-8"	
h4	6	#5	2'-8"	
h5	8	#5	2'-5"	
h6	7	#5	3'-11"	
v	4	#5	3'-9"	
v1	15	#4	5'-4"	
v2	15	#4	5'-0"	

	Item	Unit	Total
***	Reinforcement Bars	Pound	750
***	Concrete Structures	Cu. Yd.	4
****	4" Galv. Steel Pipe	5 @	2'-0"
****	4" Galv. Steel Pipe	1 @	1'-3"
****	4" Galv. Steel Pipe	1 @	0'-11"
****	Side Assembly	Each	14

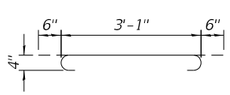

BAR a

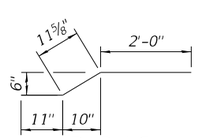

BAR h6

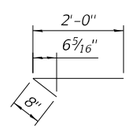

BAR h3

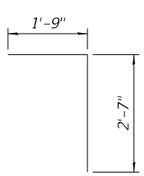

BAR d1

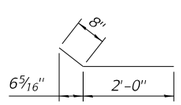

BAR h4

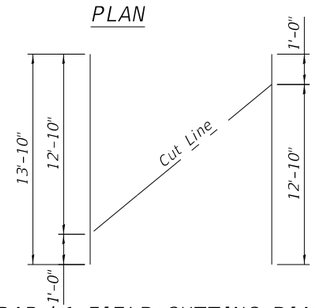

BAR h1 FIELD CUTTING DIAGRAM
(Cut bars as shown. Use remainder in opposite wall.)

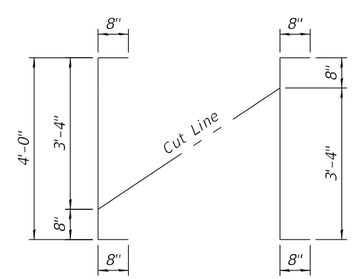

BAR v1 FIELD CUTTING DIAGRAM
(Cut bars as shown. Use remainder in opposite wall.)

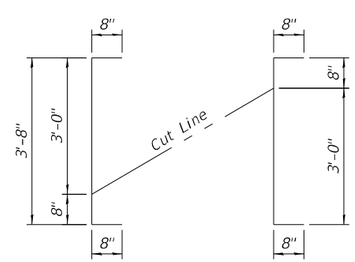

BAR v2 FIELD CUTTING DIAGRAM
(Cut bars as shown. Use remainder in opposite wall.)

RS&H

USER NAME = LorrL	DESIGNED - BPK	REVISED -
	DRAWN - BPK	REVISED -
PLOT SCALE =	CHECKED - JIK	REVISED -
PLOT DATE = 7/11/2024	DATE - 6/17/2022	REVISED -

STATE OF ILLINOIS
DEPARTMENT OF TRANSPORTATION

END SECTION DETAILS CAST-IN-PLACE
REINFORCED CONCRETE END SECTION 24" STA 2139+55.83

SHEET NO. 2 OF 3 SHEETS

F.A.P. RTE.	SECTION	COUNTY	TOTAL SHEETS	SHEET NO.
301	24R	JO DAVIESS	594	332
		CONTRACT NO. 64B40		
		ILLINOIS	FED. AID PROJECT	

FILE NAME: pw:\\rsandh-pw.bentley.com:rsandh-pw-01\Documents\Transportation\Projects\1130050,000 US 20 Stockton\CADStructures\XXXXXX2-D264B40_sht_002_CulvertDetails

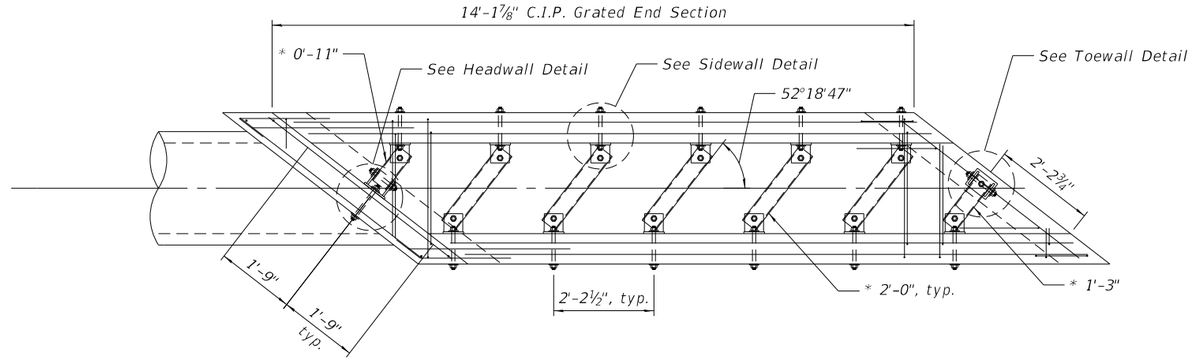

* 4" Galvanized Steel Pipe

PLAN

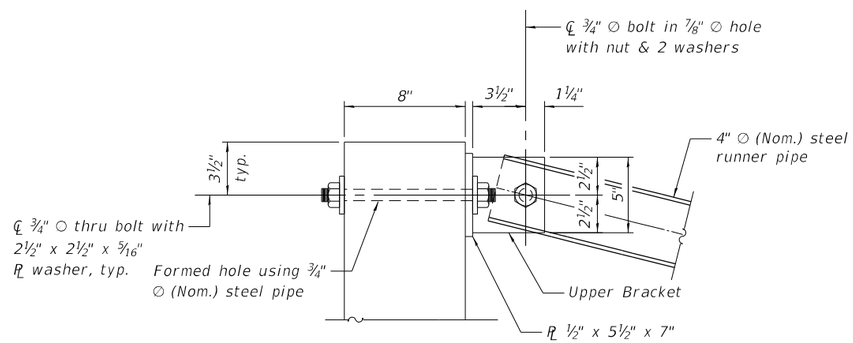

HEADWALL DETAIL

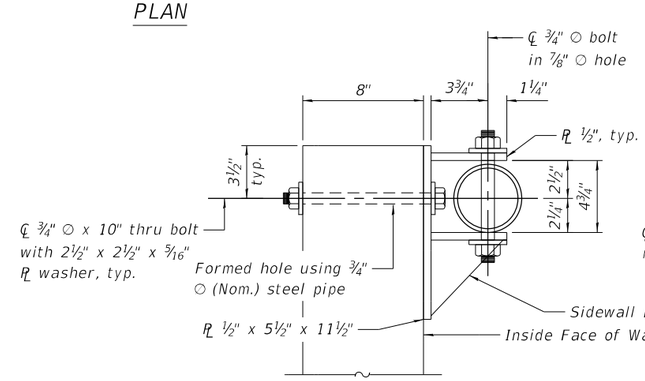

SECTION A-A

(Showing installed bracket)

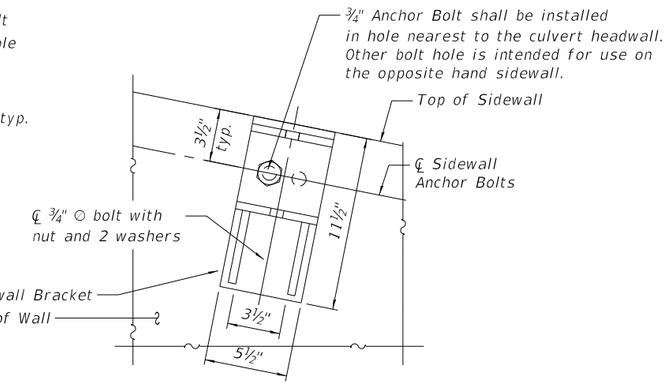

ELEVATION

(Showing installed bracket normal to wall. Pipe not shown for clarity.)

SIDEWALL ATTACHMENT DETAILS

GRATING NOTES

Grating shall include the pipes, brackets, and hardware as shown and shall be included in the contract unit price per foot for Traversable Pipe Grate, Special.

Steel pipes shall conform to ASTM A53, Grade B, Schedule 40, and shall be galvanized conforming to ASTM A120.

Brackets shall conform to AASHTO M-183 and shall be galvanized conforming to AASHTO M-111.

Bolts, nuts, and washers shall be in accordance with Article 1006.08 of the Standard Specifications and shall be galvanized.

The inorganic zinc rich primer/acrylic/acrylic paint system shall be used for field painting of holes, threads, etc.

Contractor shall field verify galvanized pipe length.

The minimum distance from the center of a hole to the free edge of a structural shape or plate shall be 1½" unless noted otherwise.

Fabrication of the Steel Pipe Grate System shall conform to the requirements in Section 505 of the Standard Specifications unless noted otherwise.

The Contractor may install the thru bolts using drilling and grouting in lieu of providing a formed hole using steel pipe. Installation shall be in accordance with Article 509.06 using a method that results in the annulus surrounding the bolt being completely filled with adhesive. The method of drilling shall not result in spalled concrete at the exit face. Epoxy grouted thru bolts shall be snug tightened followed by an additional ⅓ turn on the interior nut at final installation. Cost included with Concete Box Culverts.

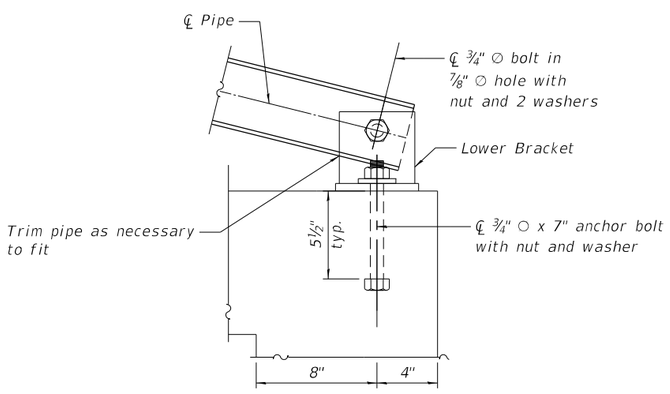

TOEWALL DETAIL

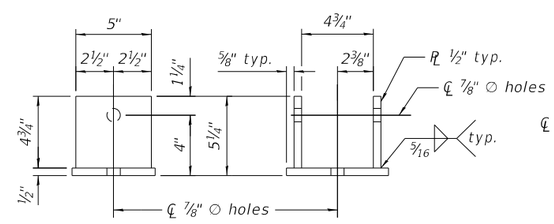

SIDE VIEW ELEVATION

UPPER & LOWER BRACKET DETAIL

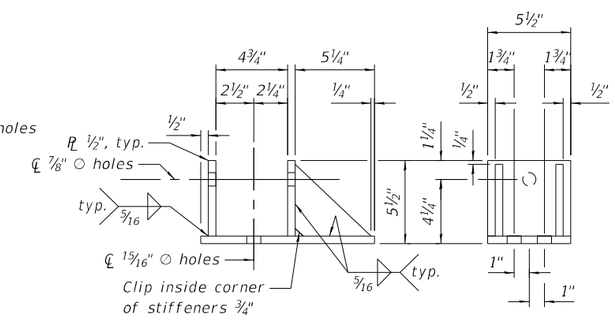

ELEVATION SIDE VIEW

SIDEWALL BRACKET DETAILS

FILE NAME: pw:\\sandh-pw.bentley.com:sandh-pw01\Documents\Transportation\Projects\1130059\000 US 20 Stockton\CAD\Structures\XXXXXX2-D264B40_sht 003_GratingDetails

RS&H

USER NAME = LorrL	DESIGNED - BPK	REVISED -	
	DRAWN - BPK	REVISED -	
PLOT SCALE =	CHECKED - JIK	REVISED -	
PLOT DATE = 7/11/2024	DATE - 6/17/2022	REVISED -	

STATE OF ILLINOIS
DEPARTMENT OF TRANSPORTATION

GRATING DETAILS CAST-IN-PLACE
REINFORCED CONCRETE END SECTION 24" STA 2139+55.83

SHEET NO. 3 OF 3 SHEETS

F.A.P. RTE.	SECTION	COUNTY	TOTAL SHEETS	SHEET NO.
301	24R	JO DAVIESS	594	333
		CONTRACT NO. 64B40		
		ILLINOIS	FED. AID PROJECT	

Benchmark: Disk, Sta. 1979+43.27, 20.35' Lt., Elev. 929.89

Existing Structure: SN:043-0036 was originally built in 1971 as SBI Route 5, Sec 24 B1. In 2006, the superstructure was replaced and substructure repaired as FAP 301, Sec. 24 BR-1, Contract 64A48. In 2019, the east pier and slope protection was partially replaced and repaired. The three simple-span PPC deck beam superstructure is supported on pile bent abutments and piers. The structure measures 203'-9" back to back of abutments and 42'-10" out to out. The span lengths are 59'-10⅝", 80'-0", and 59'-10⅝". The structure is skewed 10°.

New Structure to be built on new alignment. Traffic maintained on existing alignment during construction.

No Salvage.

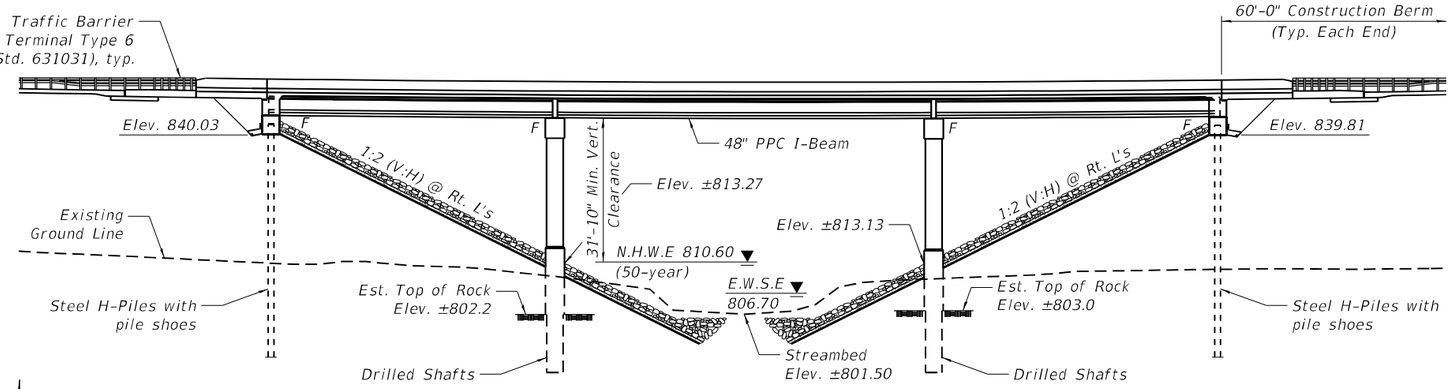

ELEVATION

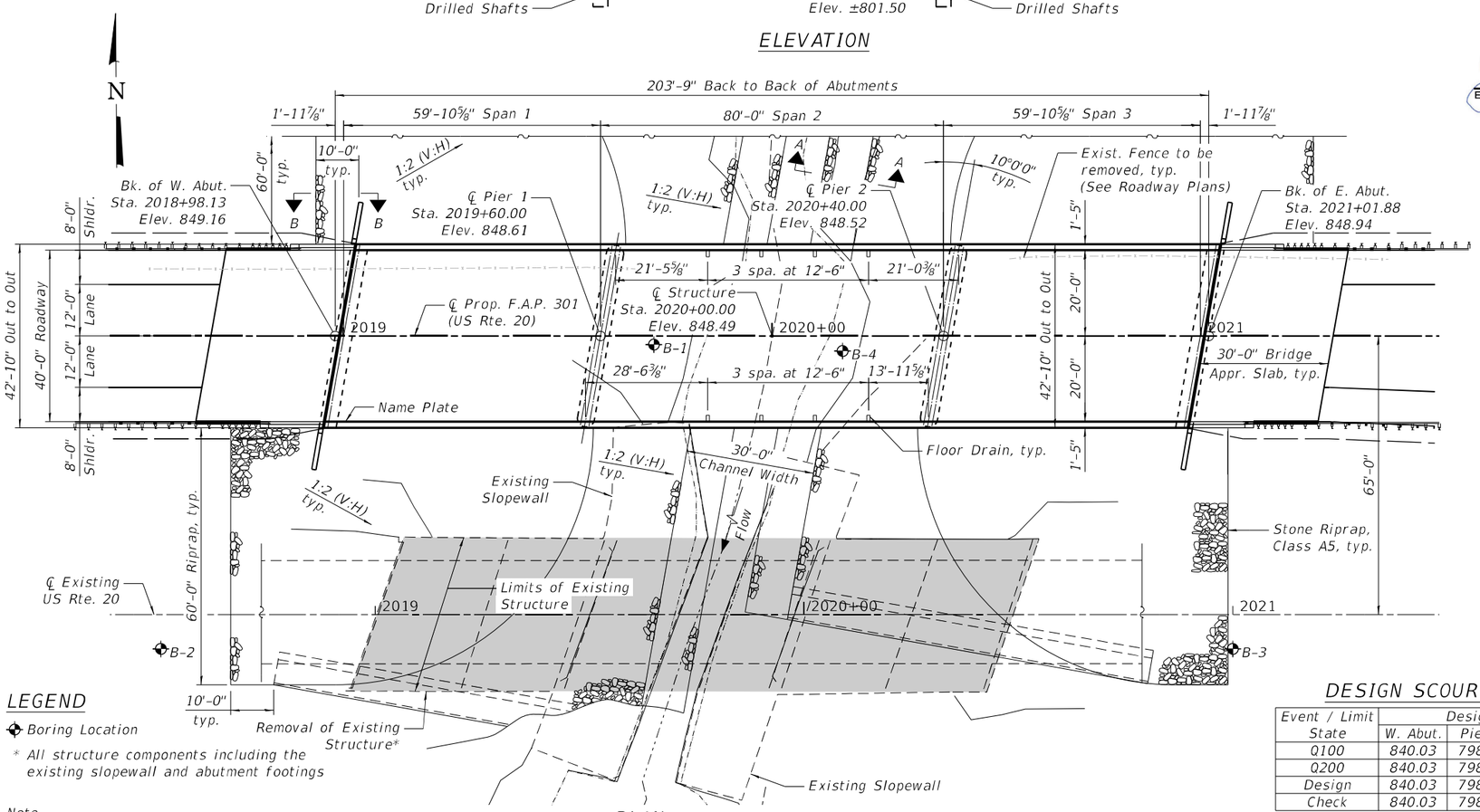

PLAN

LEGEND

Boring Location

* All structure components including the existing slopewall and abutment footings

Note
See sheet S-2 for Sections A-A and B-B

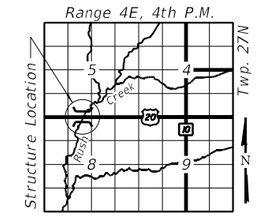

LOCATION SKETCH

APPROVED
For Structural Adequacy Only
Engineer of Bridges & Structures

DESIGN SPECIFICATIONS

2017 AASHTO LRFD Bridge Design Specifications, 8th Edition with 2018 Interims

DESIGN STRESSES

FIELD UNITS

f'c = 3,500 psi
f'c = 4,000 psi (Superstructure Concrete)
(Drilled Shaft Concrete)
fy = 60,000 psi (Reinforcement)

PRECAST PRESTRESSED UNITS

f'c = 7,000 psi
f'ci = 6,000 psi
fpu = 270,000 psi (1/2" dia. low lax strands)
fpbt = 201,960 psi (1/2" dia. low lax strands)

LOADING HL-93

Allow 50#/sq. ft. for future wearing surface.

SEISMIC DATA

Seismic Performance Zone (SPZ) = 1
Design Spectral Acceleration at 1.0 sec. (SD1) = .049g
Design Spectral Acceleration at 0.2 sec. (SDS) = .084g
Soil Site Class = C

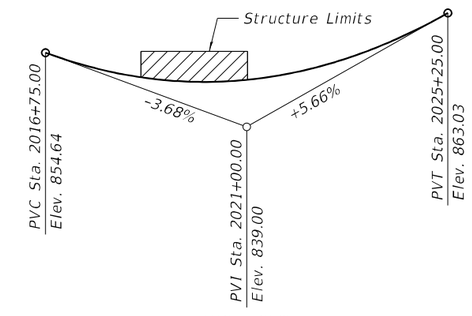

PROFILE GRADE
(Along ℄ of US Route 20)

JOSEPH KLENCK
081-008344
LICENSED STRUCTURAL ENGINEER
STATE OF ILLINOIS

BY: Joseph Klenck
LICENSE EXPIRES: 11/30/2022

WATERWAY INFORMATION

Drainage Area = 4.02 sq. mi. Low Grade Elev. 848.50 @ Sta. 2020+10

Flood	Freq. Yr.	Q C.F.S.	Opening Ft² Exist.	Opening Ft² Prop.	Nat. H.W.E.	Head - Ft. Exist.	Head - Ft. Prop.	Headwater El. Exist.	Headwater El. Prop.
	10	1,270	140.2	312.1	808.7	2.2	2.2	810.9	810.9
Design	50	2,140	214.2	427.5	810.6	1.6	1.4	812.2	812.0
Base	100	2,540	246.5	478.9	811.4	1.4	1.1	812.8	812.5
Overtopping	200	2,967	272.0	517.2	812.0	2.2	1.0	814.2	813.0
Max. Calc.	500	3,570	308.2	569.0	812.8	2.5	0.7	815.3	813.5

10-Year Velocity through Exist. Bridge = 11.1 ft/s
10-Year Velocity through Prop. Bridge = 5.24 ft/s

DESIGN SCOUR ELEVATION TABLE

Event / Limit State	Design Scour Elevations (ft.) W. Abut.	Pier 1	Pier 2	E. Abut.	Item 113
Q100	840.03	798.70	800.50	839.81	5
Q200	840.03	798.70	800.50	839.81	
Design	840.03	798.70	800.50	839.81	
Check	840.03	798.70	800.50	839.81	

GENERAL PLAN & ELEVATION
U.S. ROUTE 20 OVER RUSH CREEK
F.A.P. 301 - SEC. 24R
JO DAVIESS COUNTY
STATION 2020+00
STRUCTURE NO. 043-0063

FILE NAME: pw:\\rsnsh-pw.bentley.com:rsandh-pw4\Documents\Transportation\Projects\130059.000_US 20 Stockton\CAD\Structures\0430063-2784840-001-GPE (COPY).dgn

RS&H	USER NAME = BlomquiM	DESIGNED - JIK	REVISED -	STATE OF ILLINOIS DEPARTMENT OF TRANSPORTATION	GENERAL PLAN AND ELEVATION STRUCTURE NO. 043-0063	F.A.P. RTE.	SECTION	COUNTY	TOTAL SHEETS	SHEET NO.
		DRAWN - JIK	REVISED -			301	24R	JO DAVIESS	594	334
	PLOT SCALE =	CHECKED - JLR	REVISED -					CONTRACT NO. 64B40		
	PLOT DATE = 10/3/2022	DATE - 2/18/2019	REVISED -		SHEET NO. S-1 OF S-25 SHEETS		ILLINOIS	FED. AID PROJECT		

STATION 2020+00.00
BUILT 20__ BY
STATE OF ILLINOIS
F.A.P. RT. 301 - SEC. 24R
LOADING HL-93
STRUCTURE NO. 043-0063

NAME PLATE

See Std. 515001

INDEX OF SHEETS

GENERAL NOTES

1. Reinforcement bars designated (E) shall be epoxy coated.
2. Layout of the slope protection system may be varied to suit ground conditions in the field as directed by the Engineer.
3. The embankment configuration shown shall be the minimum that must be placed and compacted prior to construction of the abutments.
4. Bridge flow must be maintained throughout the project. Normal flow shall be allowed to pass at the rate it enters the jobsite. High flows shall be allowed to pass without causing damage to upstream properties.

TOTAL BILL OF MATERIAL

ITEM	UNIT	SUPER	SUB	TOTAL
Stone Riprap, Class A5	Sq Yd		4,212	4,212
Filter Fabric	Sq Yd		4,212	4,212
Removal of Existing Structures	Each	1		1
Structure Excavation	Cu Yd		220	220
Floor Drains	Each	8		8
Concrete Structures	Cu Yd		190.6	190.6
Concrete Superstructure	Cu Yd	342.1		342.1
Bridge Deck Grooving	Sq Yd	1,106		1,106
Protective Coat	Sq Yd	1,380		1,380
Concrete Superstructure (Approach Slab)	Cu Yd	119.1		119.1
Furnishing and Erecting Precast Prestressed Concrete I-Beams, 48 in.	Foot	1,193		1,193
Reinforcement Bars	Pound		12,260	12,260
Reinforcement Bars, Epoxy Coated	Pound	128,460	37,000	165,460
Furnishing Steel Piles HP14x73	Foot		460	460
Driving Piles	Foot		460	460
Test Pile Steel HP14x73	Each		2	2
Pile Shoes	Each		12	12
Name Plates	Each		1	1
Drilled Shaft in Soil	Cu Yd		33.1	33.1
Drilled Shaft in Rock	Cu Yd		21.4	21.4
Granular Backfill for Structures	Cu Yd		220	220
Geocomposite Wall Drain	Sq Yd		99	99
Crosshole Sonic Logging Access Ducts	Foot		132	132
Crosshole Sonic Logging Testing	Each		2	2
Pipe Underdrains for Structures, 4"	Foot		175	175

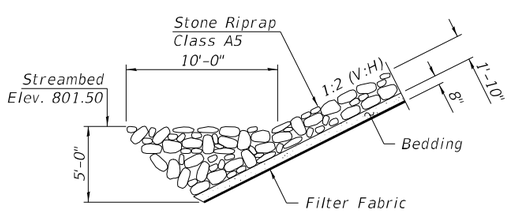

SECTION A-A

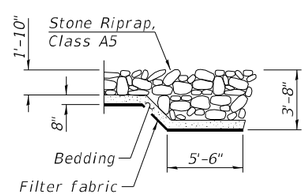

SECTION B-B

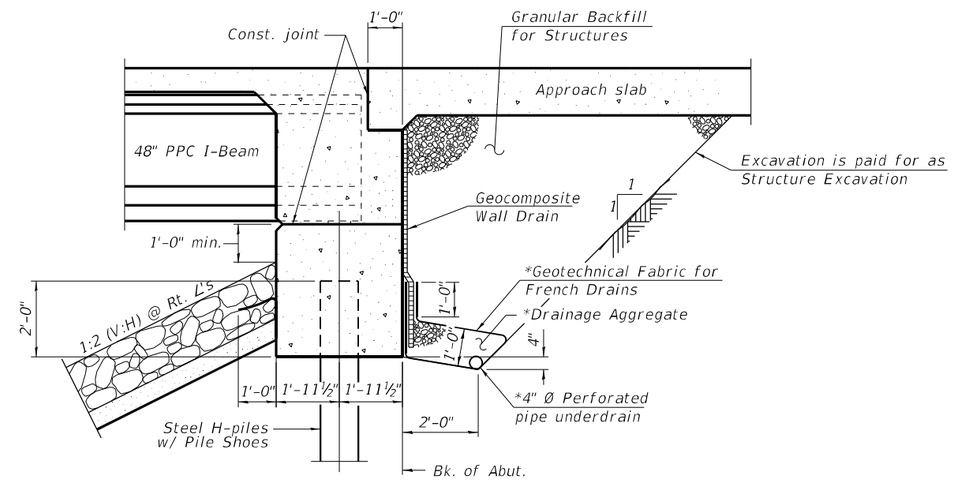

SECTION THRU INTEGRAL ABUTMENT

(Horiz. dim. @ Rt. ∠'s)

*Included in the cost of Pipe Underdrains for Structures.

Note:
All drainage system components shall extend to 2'-0" from the end of each wingwall except an outlet pipe shall extend until intersecting with the side slopes. The pipes shall drain into concrete headwalls. (See Article 601.05 of the Standard Specifications and Highway Standard 601101).
See Drainage Plans for pipe underdrain locations.

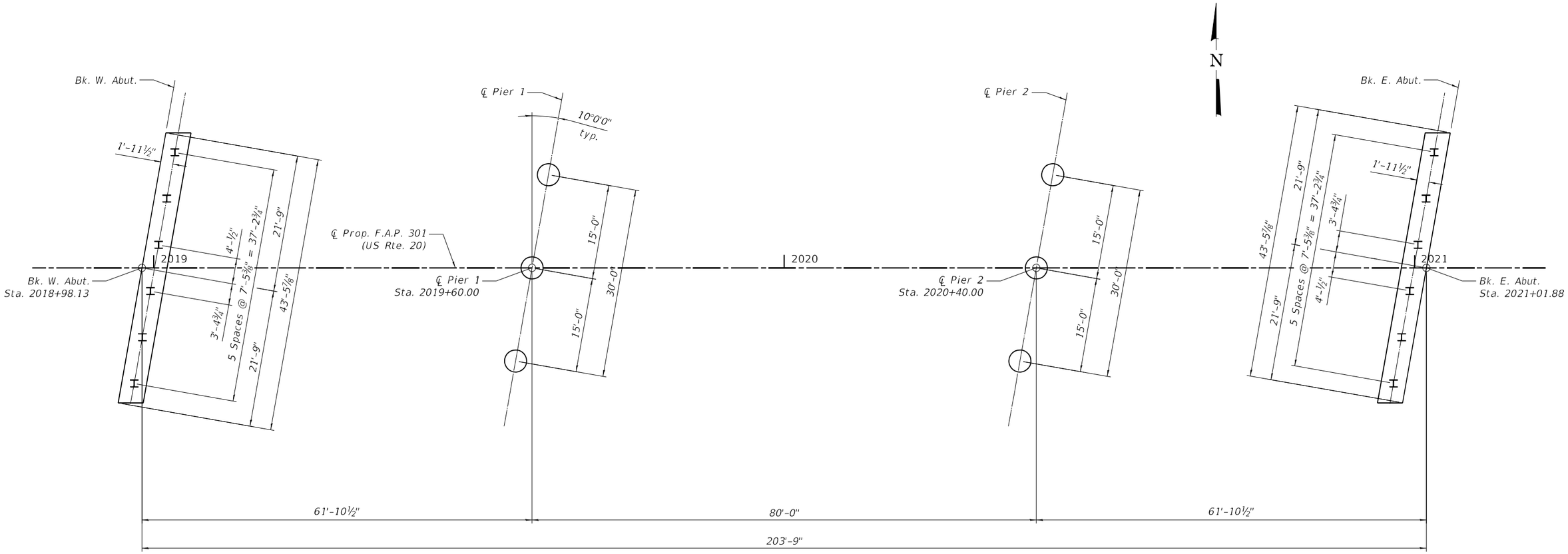

FOUNDATION LAYOUT

LEGEND

I HP-14x73 Piles

◯ Drilled Shafts

FILE NAME: pw:\\rsandh-pw.bentley.com:rsandh-pw01\Documents\Transportation\Projects\130059.000 US 20 Stockton\CADStructures\0430063-D264B40-003-Foundation Layout.dgn

RS&H	USER NAME = BlomquiM	DESIGNED - JIK	REVISED -	STATE OF ILLINOIS DEPARTMENT OF TRANSPORTATION	FOUNDATION LAYOUT STRUCTURE NO. 043-0063	F.A.P. RTE.	SECTION	COUNTY	TOTAL SHEETS / SHEET NO.
		DRAWN - JIK	REVISED -			301	24R	JO DAVIESS	594 / 336
	PLOT SCALE =	CHECKED - JLR	REVISED -			CONTRACT NO. 64B40			
	PLOT DATE = 10/3/2022	DATE - 2/18/2019	REVISED -		SHEET NO. S-3 OF S-25 SHEETS	ILLINOIS	FED. AID PROJECT		

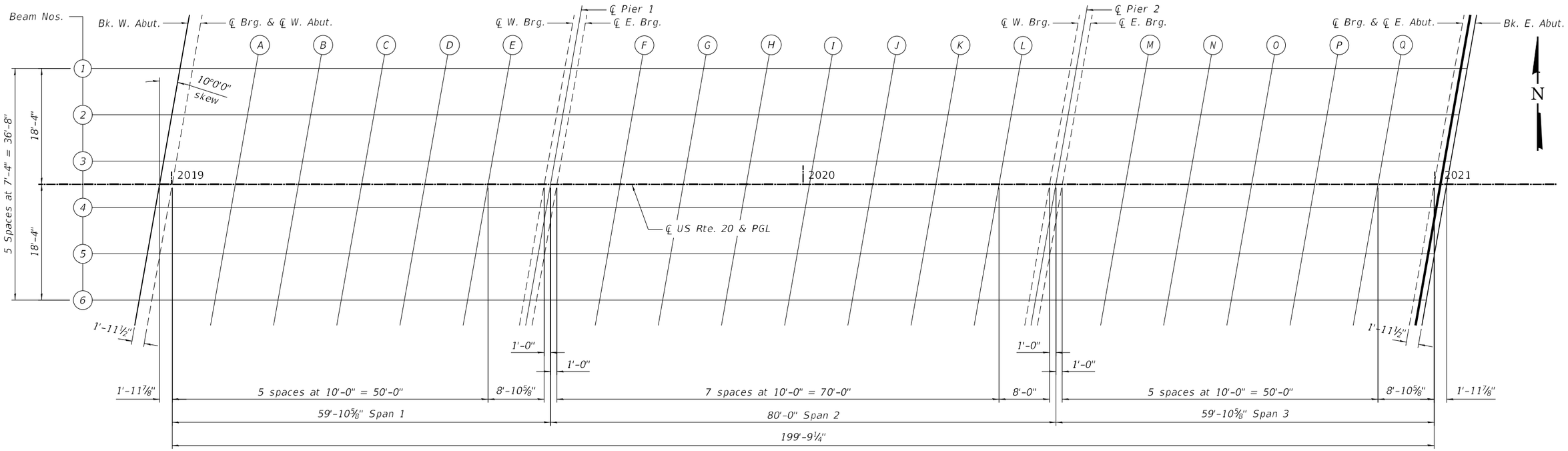

PLAN

℄ US ROUTE 20 & PGL

Location	Station	Offset	Theoretical Grade Elevations	Theoretical Grade Elevations Adjusted for Dead Load Deflections
Bk. W. Abut.	2018+98.13	0.00	849.16	849.16
CL Brg. W. Abut.	2019+00.11	0.00	849.14	849.14
A	2019+10.11	0.00	849.02	849.04
B	2019+20.11	0.00	848.92	848.94
C	2019+30.11	0.00	848.83	848.85
D	2019+40.11	0.00	848.74	848.76
E	2019+50.11	0.00	848.67	848.68
CL W. Brg.	2019+59.00	0.00	848.62	848.62
CL Pier 1	2019+60.00	0.00	848.61	848.61
CL E. Brg.	2019+61.00	0.00	848.61	848.61
F	2019+71.00	0.00	848.56	848.59
G	2019+81.00	0.00	848.52	848.58
H	2019+91.00	0.00	848.49	848.56
I	2020+01.00	0.00	848.48	848.55
J	2020+11.00	0.00	848.47	848.54
K	2020+21.00	0.00	848.48	848.53
L	2020+31.00	0.00	848.50	848.53
CL W. Brg.	2020+39.00	0.00	848.52	848.52
CL Pier 2	2020+40.00	0.00	848.52	848.52
CL E. Brg.	2020+41.00	0.00	848.53	848.53
M	2020+51.00	0.00	848.57	848.58
N	2020+61.00	0.00	848.62	848.64
O	2020+71.00	0.00	848.68	848.70
P	2020+81.00	0.00	848.75	848.77
Q	2020+91.00	0.00	848.83	848.85
CL Brg. E. Abut	2020+99.89	0.00	848.92	848.92
Bk. E. Abut.	2021+01.88	0.00	848.94	848.94

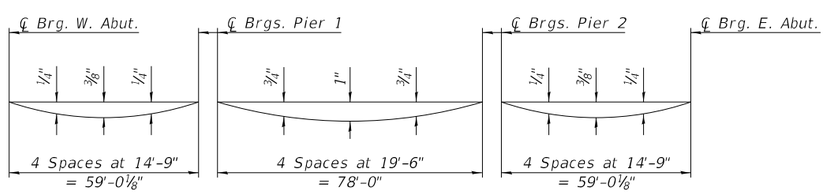

DEAD LOAD DEFLECTION DIAGRAM

(Includes weight of concrete, excluding beams).

Note:
The above deflections are not to be used in the field if the engineer is working from the grade elevations adjusted for dead load deflections as shown on sheets S-4 and S-5 of S-25.

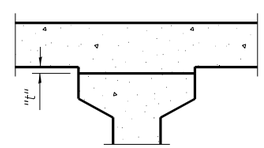

To determine "t": After all precast prestressed beams have been erected, elevations of the top flanges of the beams shall be taken at intervals shown below. These elevations subtracted from the "Theoretical Grade Elevations Adjusted for Dead Load Deflections" shown on sheets S-4 and S-5 of S-25, minus slab thickness, equals the fillet heights "t" above top flanges of beams.

FILLET HEIGHTS

FILE NAME: pw:\\rsh-pw.bentley.com:sandl-pw01\Documents\Transportation\Projects\130059.000_US 20 Stockton\CAD\Structures\0430063-D2B4B40-D04-TopOfSlabElev01.dgn

RS&H	USER NAME = BlomquiM	DESIGNED - JIK	REVISED -
		DRAWN - JIK	REVISED -
	PLOT SCALE =	CHECKED - JLR	REVISED -
	PLOT DATE = 10/3/2022	DATE - 2/18/2019	REVISED -

STATE OF ILLINOIS
DEPARTMENT OF TRANSPORTATION

TOP OF SLAB ELEVATIONS (1 OF 2)
STRUCTURE NO. 043-0063

SHEET NO. S-4 OF S-25 SHEETS

F.A.P. RTE.	SECTION	COUNTY	TOTAL SHEETS	SHEET NO.
301	24R	JO DAVIESS	594	337
		CONTRACT NO. 64B40		
		ILLINOIS	FED. AID PROJECT	

BEAM 1

Location	Station	Offset	Theoretical Grade Elevations	Theoretical Grade Elevations Adjusted for Dead Load Deflections
Bk. W. Abut.	2019+01.36	-18.33	848.80	848.80
CL Brg. W. Abut.	2019+03.35	-18.33	848.78	848.78
A	2019+13.35	-18.33	848.67	848.68
B	2019+23.35	-18.33	848.57	848.59
C	2019+33.35	-18.33	848.48	848.50
D	2019+43.35	-18.33	848.40	848.42
E	2019+53.35	-18.33	848.33	848.35
CL W. Brg.	2019+62.23	-18.33	848.28	848.28
CL Pier 1	2019+63.23	-18.33	848.28	848.28
CL E. Brg.	2019+64.23	-18.33	848.27	848.27
F	2019+74.23	-18.33	848.23	848.26
G	2019+84.23	-18.33	848.19	848.25
H	2019+94.23	-18.33	848.17	848.25
I	2020+04.23	-18.33	848.16	848.24
J	2020+14.23	-18.33	848.16	848.23
K	2020+24.23	-18.33	848.17	848.22
L	2020+34.23	-18.33	848.19	848.22
CL W. Brg.	2020+42.23	-18.33	848.21	848.21
CL Pier 2	2020+43.23	-18.33	848.22	848.22
CL E. Brg.	2020+44.23	-18.33	848.22	848.22
M	2020+54.23	-18.33	848.26	848.28
N	2020+64.23	-18.33	848.32	848.34
O	2020+74.23	-18.33	848.38	848.41
P	2020+84.23	-18.33	848.46	848.48
Q	2020+94.23	-18.33	848.54	848.56
CL Brg. E. Abut	2021+03.12	-18.33	848.63	848.63
Bk. E. Abut.	2021+05.11	-18.33	848.65	848.65

BEAM 2

Location	Station	Offset	Theoretical Grade Elevations	Theoretical Grade Elevations Adjusted for Dead Load Deflections
Bk. W. Abut.	2019+00.06	-11.00	848.97	848.97
CL Brg. W. Abut.	2019+02.05	-11.00	848.94	848.94
A	2019+12.05	-11.00	848.83	848.84
B	2019+22.05	-11.00	848.73	848.75
C	2019+32.05	-11.00	848.64	848.66
D	2019+42.05	-11.00	848.56	848.58
E	2019+52.05	-11.00	848.49	848.50
CL W. Brg.	2019+60.94	-11.00	848.44	848.44
CL Pier 1	2019+61.94	-11.00	848.43	848.43
CL E. Brg.	2019+62.94	-11.00	848.42	848.42
F	2019+72.94	-11.00	848.38	848.41
G	2019+82.94	-11.00	848.34	848.40
H	2019+92.94	-11.00	848.32	848.39
I	2020+02.94	-11.00	848.31	848.38
J	2020+12.94	-11.00	848.30	848.37
K	2020+22.94	-11.00	848.31	848.36
L	2020+32.94	-11.00	848.33	848.36
CL W. Brg.	2020+40.94	-11.00	848.36	848.36
CL Pier 2	2020+41.94	-11.00	848.36	848.36
CL E. Brg.	2020+42.94	-11.00	848.36	848.36
M	2020+52.94	-11.00	848.40	848.42
N	2020+62.94	-11.00	848.46	848.48
O	2020+72.94	-11.00	848.52	848.54
P	2020+82.94	-11.00	848.59	848.61
Q	2020+92.94	-11.00	848.68	848.69
CL Brg. E. Abut	2021+01.83	-11.00	848.77	848.77
Bk. E. Abut.	2021+03.81	-11.00	848.79	848.79

BEAM 3

Location	Station	Offset	Theoretical Grade Elevations	Theoretical Grade Elevations Adjusted for Dead Load Deflections
Bk. W. Abut.	2018+98.77	-3.67	849.10	849.10
CL Brg. W. Abut.	2019+00.76	-3.67	849.07	849.07
A	2019+10.76	-3.67	848.96	848.97
B	2019+20.76	-3.67	848.86	848.88
C	2019+30.76	-3.67	848.76	848.79
D	2019+40.76	-3.67	848.68	848.70
E	2019+50.76	-3.67	848.61	848.62
CL W. Brg.	2019+59.65	-3.67	848.56	848.56
CL Pier 1	2019+60.65	-3.67	848.55	848.55
CL E. Brg.	2019+61.65	-3.67	848.55	848.55
F	2019+71.65	-3.67	848.50	848.53
G	2019+81.65	-3.67	848.46	848.52
H	2019+91.65	-3.67	848.44	848.50
I	2020+01.65	-3.67	848.42	848.49
J	2020+11.65	-3.67	848.42	848.48
K	2020+21.65	-3.67	848.42	848.48
L	2020+31.65	-3.67	848.44	848.47
CL W. Brg.	2020+39.65	-3.67	848.47	848.47
CL Pier 2	2020+40.65	-3.67	848.47	848.47
CL E. Brg.	2020+41.65	-3.67	848.47	848.47
M	2020+51.65	-3.67	848.51	848.53
N	2020+61.65	-3.67	848.56	848.58
O	2020+71.65	-3.67	848.63	848.65
P	2020+81.65	-3.67	848.70	848.72
Q	2020+91.65	-3.67	848.78	848.79
CL Brg. E. Abut	2021+00.53	-3.67	848.87	848.87
Bk. E. Abut.	2021+02.52	-3.67	848.89	848.89

BEAM 4

Location	Station	Offset	Theoretical Grade Elevations	Theoretical Grade Elevations Adjusted for Dead Load Deflections
Bk. W. Abut.	2018+97.48	3.67	849.11	849.11
CL Brg. W. Abut.	2018+99.47	3.67	849.09	849.09
A	2019+09.47	3.67	848.97	848.99
B	2019+19.47	3.67	848.87	848.89
C	2019+29.47	3.67	848.77	848.80
D	2019+39.47	3.67	848.69	848.71
E	2019+49.47	3.67	848.62	848.63
CL W. Brg.	2019+58.35	3.67	848.56	848.56
CL Pier 1	2019+59.35	3.67	848.56	848.56
CL E. Brg.	2019+60.35	3.67	848.55	848.55
F	2019+70.35	3.67	848.50	848.54
G	2019+80.35	3.67	848.47	848.52
H	2019+90.35	3.67	848.44	848.51
I	2020+00.35	3.67	848.42	848.49
J	2020+10.35	3.67	848.42	848.48
K	2020+20.35	3.67	848.42	848.47
L	2020+30.35	3.67	848.44	848.47
CL W. Brg.	2020+38.35	3.67	848.46	848.46
CL Pier 2	2020+39.35	3.67	848.46	848.46
CL E. Brg.	2020+40.35	3.67	848.47	848.47
M	2020+50.35	3.67	848.51	848.52
N	2020+60.35	3.67	848.56	848.58
O	2020+70.35	3.67	848.62	848.64
P	2020+80.35	3.67	848.69	848.71
Q	2020+90.35	3.67	848.77	848.78
CL Brg. E. Abut	2020+99.24	3.67	848.85	848.85
Bk. E. Abut.	2021+01.23	3.67	848.87	848.87

BEAM 5

Location	Station	Offset	Theoretical Grade Elevations	Theoretical Grade Elevations Adjusted for Dead Load Deflections
Bk. W. Abut.	2018+96.19	11.00	849.02	849.02
CL Brg. W. Abut.	2018+98.17	11.00	848.99	848.99
A	2019+08.17	11.00	848.87	848.89
B	2019+18.17	11.00	848.77	848.79
C	2019+28.17	11.00	848.67	848.69
D	2019+38.17	11.00	848.59	848.61
E	2019+48.17	11.00	848.51	848.53
CL W. Brg.	2019+57.06	11.00	848.46	848.46
CL Pier 1	2019+58.06	11.00	848.45	848.45
CL E. Brg.	2019+59.06	11.00	848.45	848.45
F	2019+69.06	11.00	848.40	848.43
G	2019+79.06	11.00	848.36	848.41
H	2019+89.06	11.00	848.33	848.40
I	2019+99.06	11.00	848.31	848.38
J	2020+09.06	11.00	848.30	848.37
K	2020+19.06	11.00	848.31	848.36
L	2020+29.06	11.00	848.32	848.35
CL W. Brg.	2020+37.06	11.00	848.34	848.34
CL Pier 2	2020+38.06	11.00	848.35	848.35
CL E. Brg.	2020+39.06	11.00	848.35	848.35
M	2020+49.06	11.00	848.39	848.40
N	2020+59.06	11.00	848.43	848.46
O	2020+69.06	11.00	848.49	848.52
P	2020+79.06	11.00	848.56	848.58
Q	2020+89.06	11.00	848.65	848.66
CL Brg. E. Abut	2020+97.95	11.00	848.73	848.73
Bk. E. Abut.	2020+99.94	11.00	848.75	848.75

BEAM 6

Location	Station	Offset	Theoretical Grade Elevations	Theoretical Grade Elevations Adjusted for Dead Load Deflections
Bk. W. Abut.	2018+94.89	18.33	848.88	848.88
CL Brg. W. Abut.	2018+96.88	18.33	848.86	848.86
A	2019+06.88	18.33	848.74	848.75
B	2019+16.88	18.33	848.63	848.66
C	2019+26.88	18.33	848.54	848.56
D	2019+36.88	18.33	848.45	848.47
E	2019+46.88	18.33	848.37	848.39
CL W. Brg.	2019+55.77	18.33	848.32	848.32
CL Pier 1	2019+56.77	18.33	848.31	848.31
CL E. Brg.	2019+57.77	18.33	848.31	848.31
F	2019+67.77	18.33	848.25	848.29
G	2019+77.77	18.33	848.21	848.27
H	2019+87.77	18.33	848.18	848.26
I	2019+97.77	18.33	848.16	848.24
J	2020+07.77	18.33	848.16	848.23
K	2020+17.77	18.33	848.16	848.22
L	2020+27.77	18.33	848.17	848.20
CL W. Brg.	2020+35.77	18.33	848.19	848.19
CL Pier 2	2020+36.77	18.33	848.19	848.19
CL E. Brg.	2020+37.77	18.33	848.20	848.20
M	2020+47.77	18.33	848.23	848.25
N	2020+57.77	18.33	848.28	848.30
O	2020+67.77	18.33	848.34	848.36
P	2020+77.77	18.33	848.41	848.43
Q	2020+87.77	18.33	848.49	848.50
CL Brg. E. Abut	2020+96.65	18.33	848.57	848.57
Bk. E. Abut.	2020+98.64	18.33	848.59	848.59

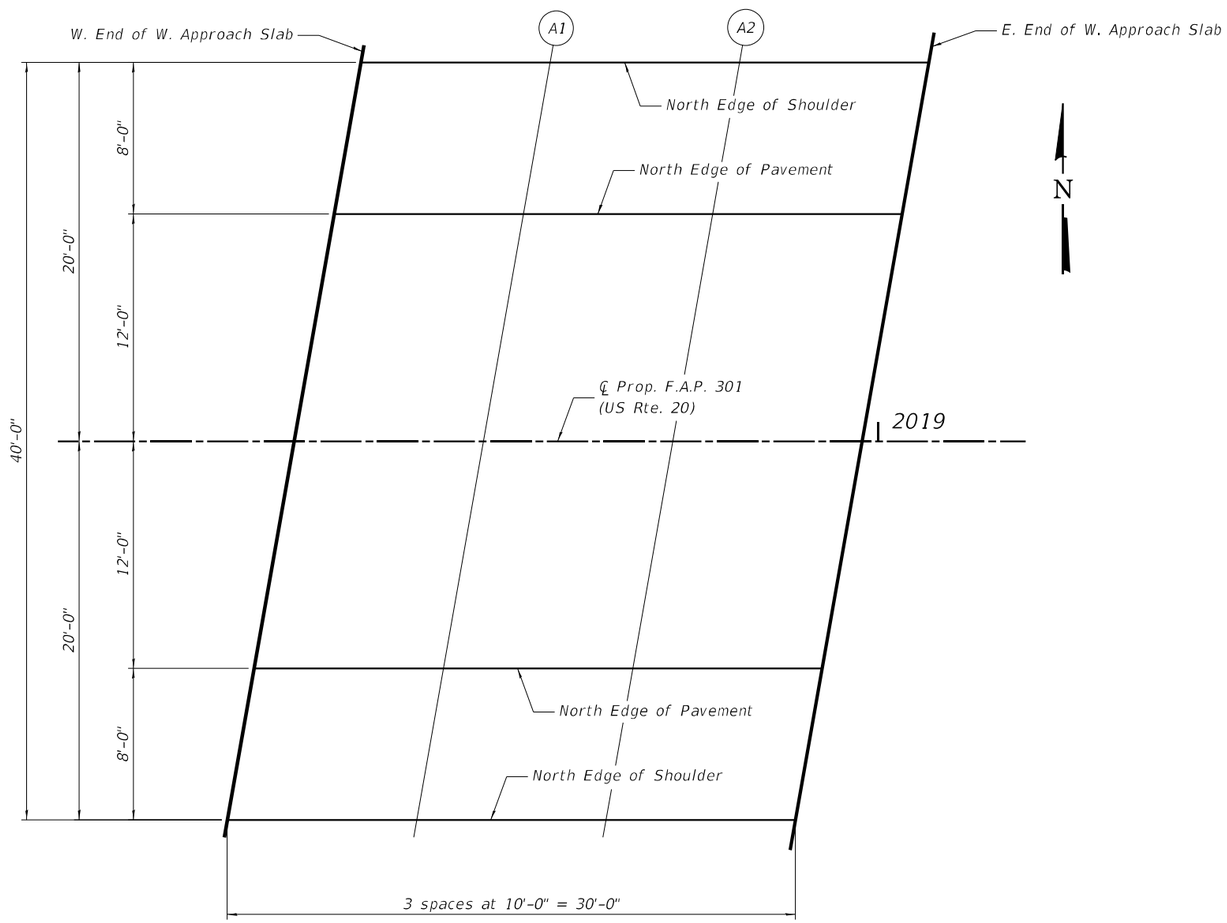

PLAN

West Approach

NORTH EDGE OF SHOULDER

Location	Station	Offset	Theoretical Grade Elevations
W. End of W. Appr. Slab	2018+72.67	-20.00	849.16
A1	2018+82.67	-20.00	849.01
A2	2018+92.67	-20.00	848.88
E. End of W. Appr. Slab	2019+02.67	-20.00	848.75

NORTH EDGE OF PAVEMENT

Location	Station	Offset	Theoretical Grade Elevations
W. End of W. Appr. Slab	2018+71.26	-12.00	849.35
A1	2018+81.26	-12.00	849.20
A2	2018+91.26	-12.00	849.06
E. End of W. Appr. Slab	2019+01.26	-12.00	848.94

℄ ROADWAY & PGL

Location	Station	Offset	Theoretical Grade Elevations
W. End of W. Appr. Slab	2018+69.14	0.00	849.57
A1	2018+79.14	0.00	849.42
A2	2018+89.14	0.00	849.28
E. End of W. Appr. Slab	2018+99.14	0.00	849.15

SOUTH EDGE OF PAVEMENT

Location	Station	Offset	Theoretical Grade Elevations
W. End of W. Appr. Slab	2018+67.02	12.00	849.41
A1	2018+77.02	12.00	849.26
A2	2018+87.02	12.00	849.12
E. End of W. Appr. Slab	2018+97.02	12.00	848.99

SOUTH EDGE OF SHOULDER

Location	Station	Offset	Theoretical Grade Elevations
W. End of W. Appr. Slab	2018+65.61	20.00	849.27
A1	2018+75.61	20.00	849.11
A2	2018+85.61	20.00	848.97
E. End of W. Appr. Slab	2018+95.61	20.00	848.84

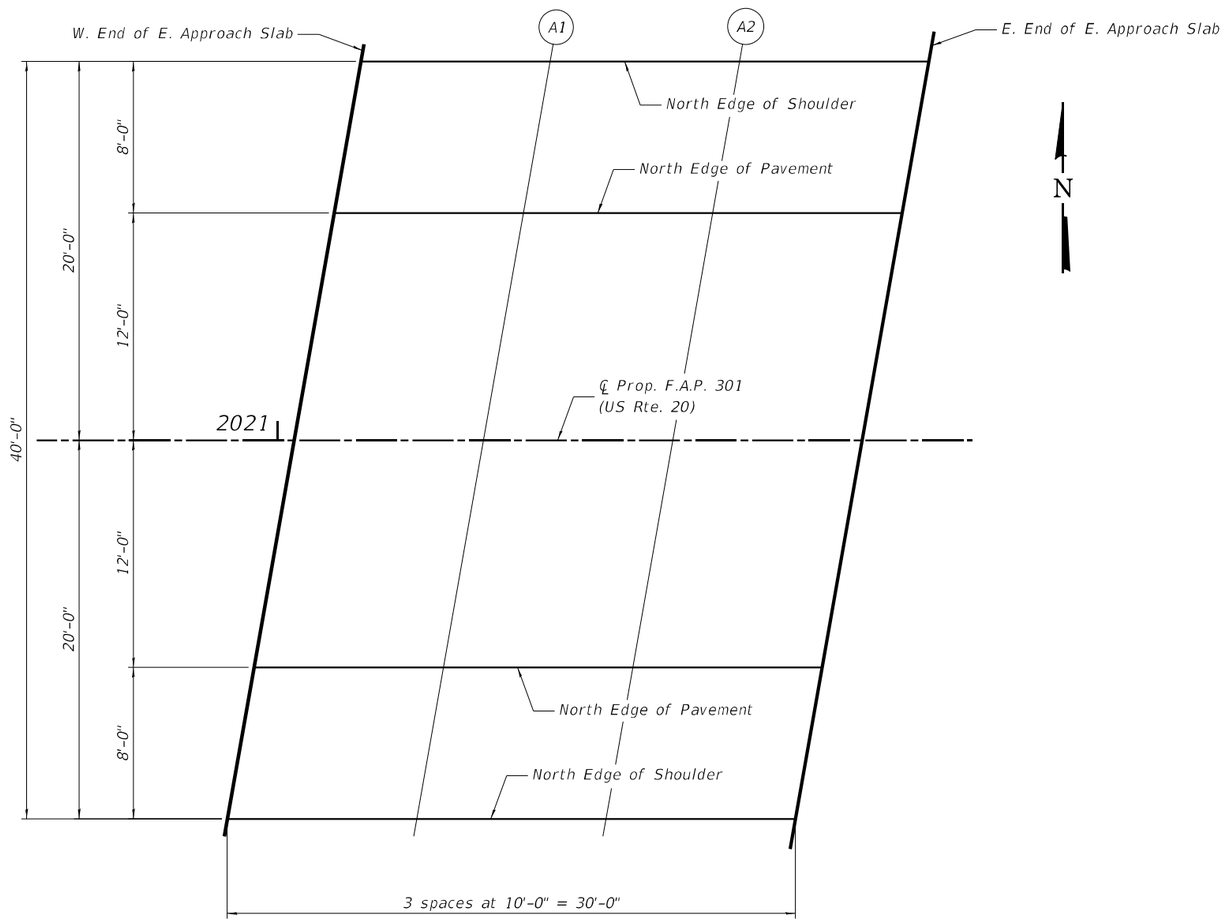

PLAN

East Approach

NORTH EDGE OF SHOULDER

Location	Station	Offset	Theoretical Grade Elevations
W. End of E. Appr. Slab	2021+04.39	-20.00	848.61
A1	2021+14.39	-20.00	848.72
A2	2021+24.39	-20.00	848.84
E. End of E. Appr. Slab	2021+34.39	-20.00	848.97

NORTH EDGE OF PAVEMENT

Location	Station	Offset	Theoretical Grade Elevations
W. End of E. Appr. Slab	2021+02.98	-12.00	848.76
A1	2021+12.98	-12.00	848.87
A2	2021+22.98	-12.00	848.99
E. End of E. Appr. Slab	2021+32.98	-12.00	849.12

℄ ROADWAY & PGL

Location	Station	Offset	Theoretical Grade Elevations
W. End of E. Appr. Slab	2021+00.86	0.00	848.93
A1	2021+10.86	0.00	849.03
A2	2021+20.86	0.00	849.15
E. End of E. Appr. Slab	2021+30.86	0.00	849.28

SOUTH EDGE OF PAVEMENT

Location	Station	Offset	Theoretical Grade Elevations
W. End of E. Appr. Slab	2020+98.74	12.00	848.72
A1	2021+08.74	12.00	848.82
A2	2021+18.74	12.00	848.94
E. End of E. Appr. Slab	2021+28.74	12.00	849.06

SOUTH EDGE OF SHOULDER

Location	Station	Offset	Theoretical Grade Elevations
W. End of E. Appr. Slab	2020+97.33	20.00	848.54
A1	2021+07.33	20.00	848.64
A2	2021+17.33	20.00	848.75
E. End of E. Appr. Slab	2021+27.33	20.00	848.88

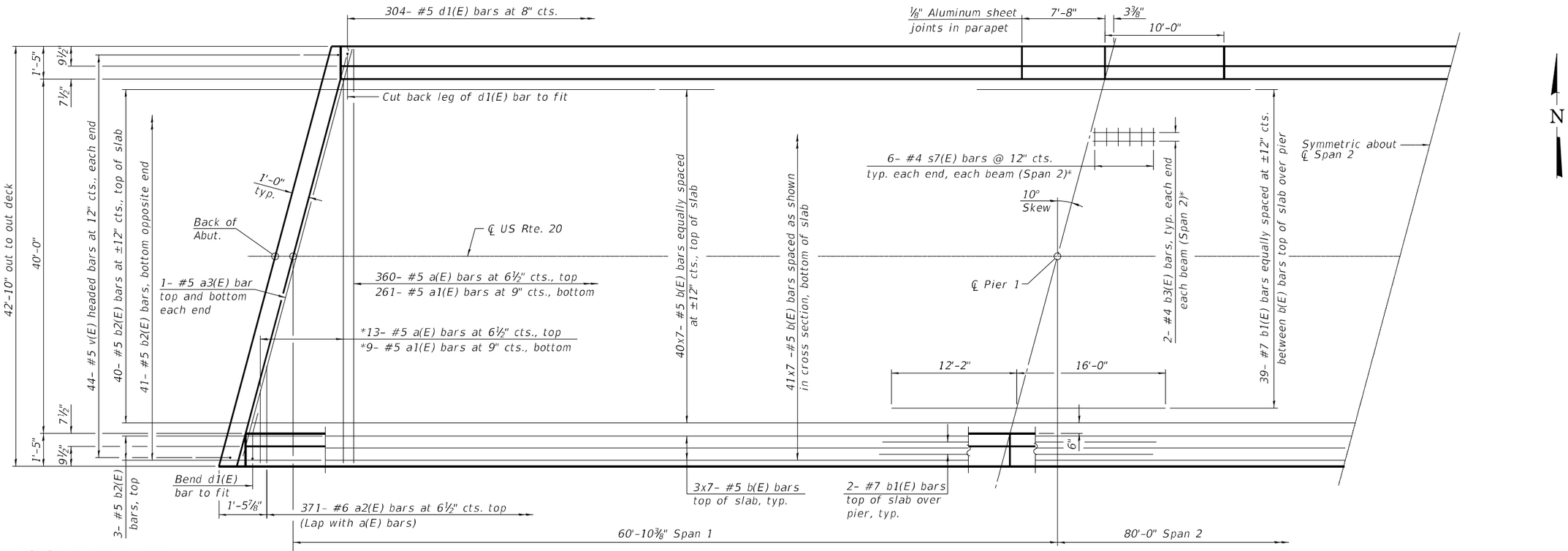

MINIMUM BAR LAP

#5 bar = 3'-6"

* See Field Cutting Diagram on sheet S-9 of S-25.

PARTIAL PLAN

Notes:
See sheet S-9 of S-25 for superstructure details and Bill of Material.
Bars indicated thus 20 x 3-#5 etc. indicates 20 lines of bars with 3 lengths per line.

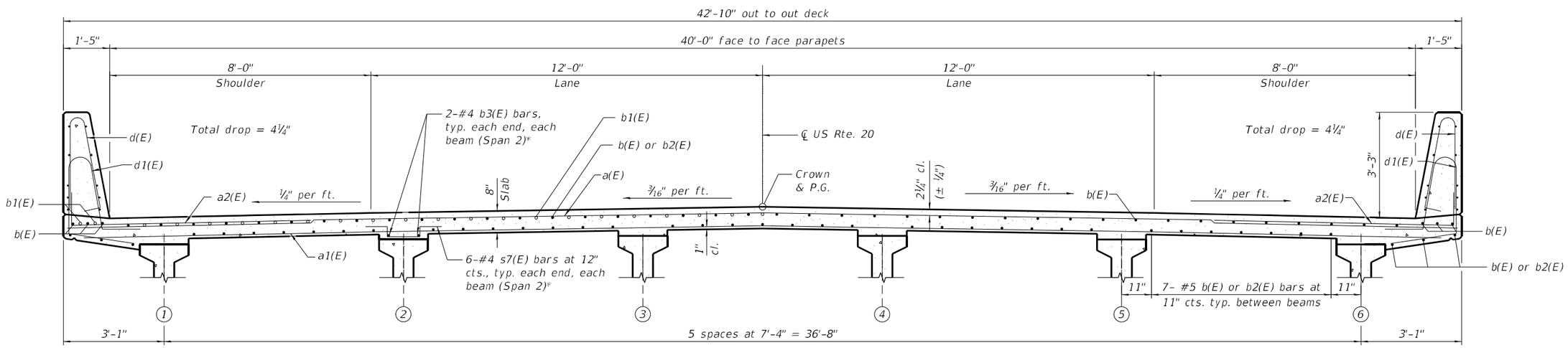

NEAR PIER

NEAR MIDSPAN

CROSS SECTION

(Looking East)

* b3(E) and s7(E) bars required where fillet exceeds 2½". The required number of s7(E) and length of b3(E) to be verified in the field and adjusted if necessary.

RS&H	USER NAME = BlomquiM	DESIGNED - KWY	REVISED -	STATE OF ILLINOIS DEPARTMENT OF TRANSPORTATION	SUPERSTRUCTURE STRUCTURE NO. 043-0063	F.A.P. RTE. 301	SECTION 24R	COUNTY JO DAVIESS	TOTAL SHEETS 594	SHEET NO. 341
		DRAWN - KWY	REVISED -					CONTRACT NO. 64B40		
	PLOT SCALE =	CHECKED - JLR	REVISED -							
	PLOT DATE = 10/3/2022	DATE - 2/18/2019	REVISED -		SHEET NO. S-8 OF S-25 SHEETS		ILLINOIS	FED. AID PROJECT		

FILE NAME: pw:\\rsh-pw.bentley.com:rsandh-pw4\Documents\Transportation\Projects\130059.000 US 20 Stockton\CAD\Structures\0430063-D26B40-D05-Superstructure.dgn

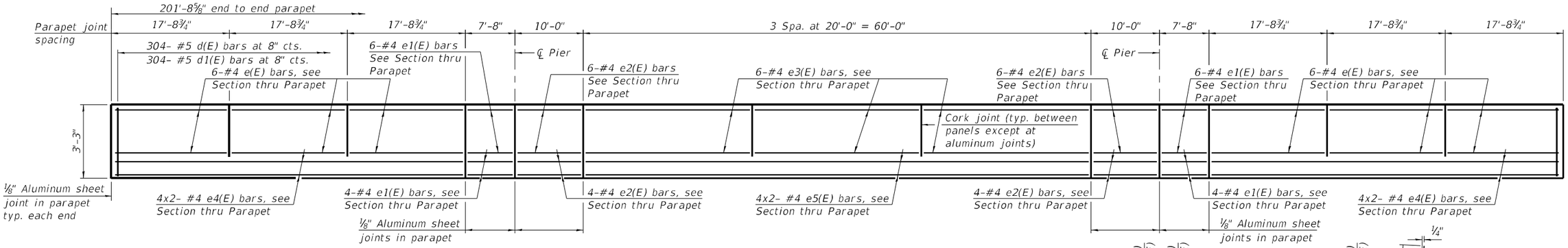

INSIDE ELEVATION OF PARAPET

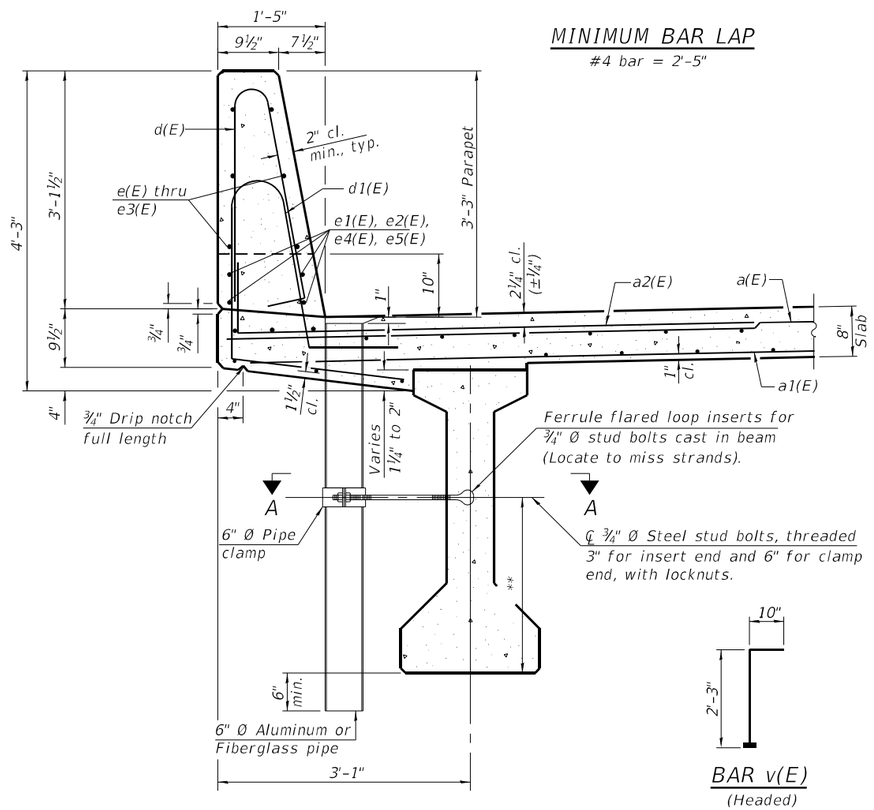

MINIMUM BAR LAP

#4 bar = 2'-5"

SECTION THRU PARAPET

**For insert locations, see sheets S-15 and S-16 of S-25 .

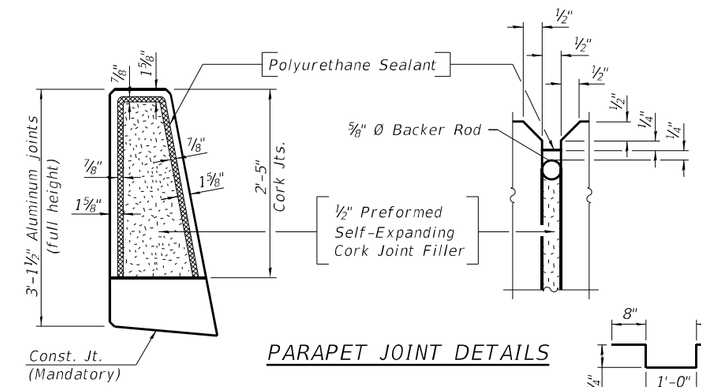

PARAPET JOINT DETAILS

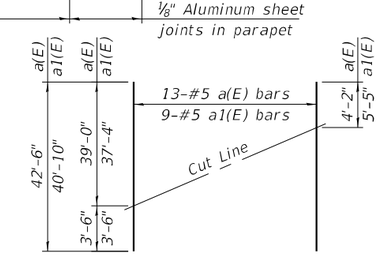

FIELD CUTTING DIAGRAM

Order a(E) and a1(E) bars full length. Cut as shown and use remainder of bars in opposite end of deck.

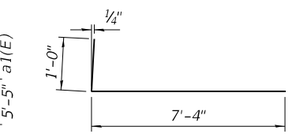

BAR a2(E)

SUPERSTRUCTURE BILL OF MATERIAL

Bar	No.	Size	Length	Shape
a(E)	373	#5	42'-6"	
a1(E)	270	#5	40'-10"	
a2(E)	742	#6	8'-4"	
a3(E)	4	#5	43'-1"	
b(E)	609	#5	30'-0"	
b1(E)	86	#7	28'-2"	
b2(E)	87	#5	16'-2"	
b3(E)	24	#4	6'-0"	
d(E)	608	#5	6'-5"	
d1(E)	608	#5	8'-2"	
e(E)	72	#4	17'-4"	
e1(E)	40	#4	7'-4"	
e2(E)	40	#4	9'-8"	
e3(E)	36	#4	19'-8"	
e4(E)	32	#4	27'-9"	
e5(E)	16	#4	31'-0"	
m(E)	12	#6	42'-6"	
m1(E)	120	#6	6'-4"	
m2(E)	30	#6	5'-2"	
m3(E)	16	#6	2'-5"	
m4(E)	4	#6	1'-10"	
m5(E)	24	#5	4'-0"	
m6(E)	24	#5	4'-0"	
s(E)	72	#5	10'-2"	
s1(E)	72	#5	12'-1"	
s2(E)	60	#5	12'-4"	
s7(E)	72	#4	2'-11½"	
v(E)	88	#5	3'-1"	
Reinforcement Bars, Epoxy Coated			Lbs.	80,300
Concrete Superstructure			Cu. Yds.	333.9

Bars indicated thus 1 x 2-#8 etc. indicates 1 line of bars with 2 lengths per line.

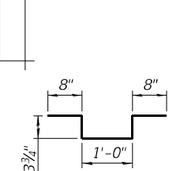

BAR s7(E)

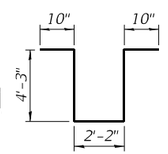

BAR s2(E)

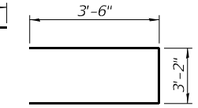

BAR s(E)

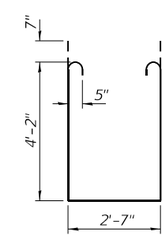

BAR s1(E)

BAR v(E)

(Headed)

Notes:

Fiberglass pipe shall conform to ASTM D2996, with short-time rupture strength hoop tensile stress of 30,000 p.s.i. minimum.

The exterior surfaces of the fiberglass floor drains shall be pigmented by the manufacturer with a color that matches the concrete.

The top portion of aluminum floor drains shall be coated to minimize reaction with wet concrete.

The clamping device and inserts shall be galvanized according to AASHTO M 232. Cost of clamping device included with Floor Drains.

The ⅛" Aluminum sheet shall be ASTM B 209 alloy 3003-H14 and coated to minimize reaction with wet concrete. Cost included with Concrete Superstructure.

The Polyurethane Sealant shall be according to Article 1050.04 of the Std. Spec. and the color shall be gray.

Headed bars shall conform to ASTM A970 with threaded attachment; Class HA; and reinforcmement bars conforming to ASTM A706. Cost included with Reinforcement Bars, Epoxy Coated.

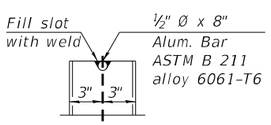

ALUMINUM TUBE

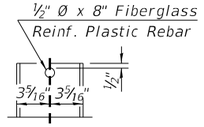

FIBERGLASS PIPE

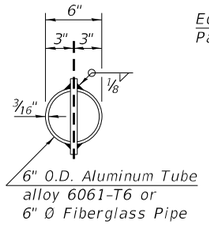

TOP PLAN

(Showing Aluminum Tube)

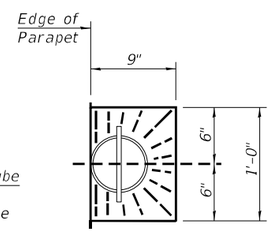

TOP PLAN

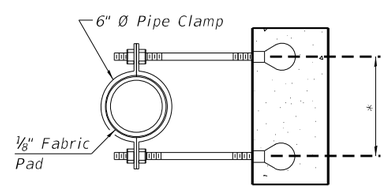

SECTION A-A

*Dimension as required by Pipe Clamp

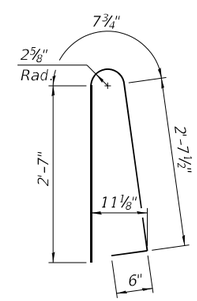

BAR d(E)

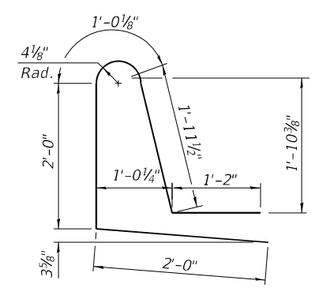

BAR d1(E)

SDI-I4854-2 6-15-2019

RS&H

USER NAME = BlomquiM	DESIGNED - KWY	REVISED -
	DRAWN - KWY	REVISED -
PLOT SCALE =	CHECKED - JLR	REVISED -
PLOT DATE = 10/3/2022	DATE - 2/18/2019	REVISED -

STATE OF ILLINOIS
DEPARTMENT OF TRANSPORTATION

SUPERSTRUCTURE DETAILS
STRUCTURE NO. 043-0063

SHEET NO. S-9 OF S-25 SHEETS

F.A.P. RTE.	SECTION	COUNTY	TOTAL SHEETS	SHEET NO.
301	24R	JO DAVIESS	594	342
		CONTRACT NO. 64B40		
		ILLINOIS FED. AID PROJECT		

FILE NAME: pw:\\rsnsh-pw.bentley.com:rsandh-pw4\Documents\Transportation\Projects\113059.000_US 20 Stockton\CAD\Structures\0430063-2784B40-009-SuperDetails.dgn

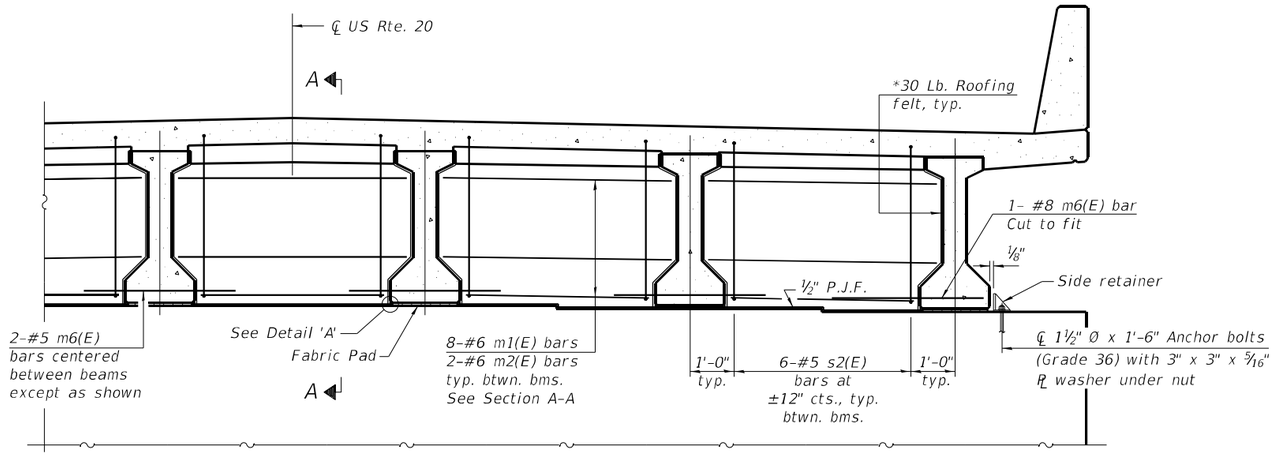

DIAPHRAGM AT PIERS

*Bonded to sides of beams embedded into diaphragm.

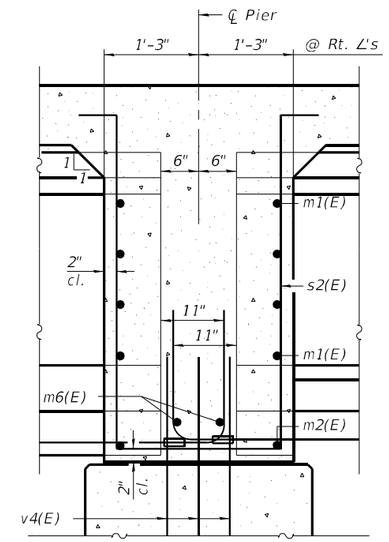

SECTION A-A

(Dimensions along ℄ of beam except as shown)

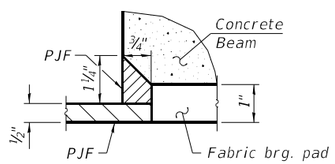

DETAIL 'A'

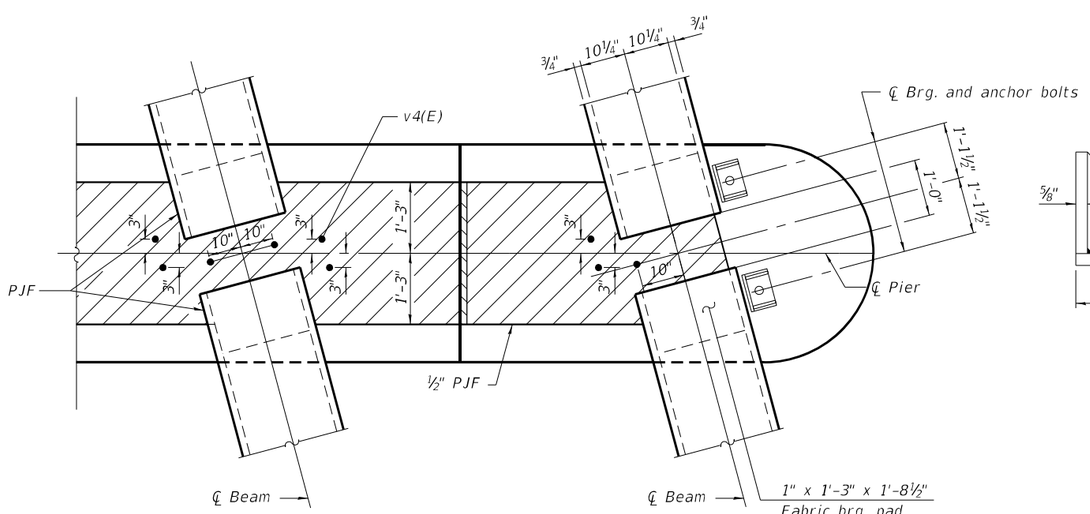

PLAN AT PIER

(Showing bearing pads and PJF details)

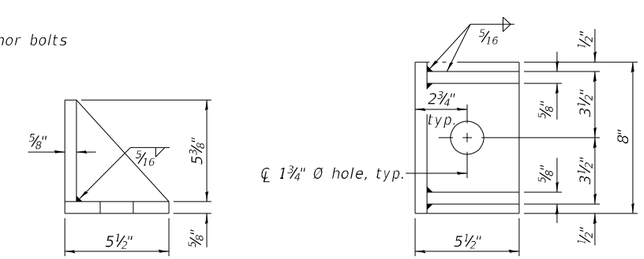

SIDE RETAINER

(2 required each side of pier).
Equivalent rolled angle with stiffeners will be allowed in lieu of welded plates.

Notes:

See sheet S-9 of S-25 for superstructure details and Bill of Material.

Cost of 30 Lb. roofing felt is included with Concrete Superstructure.

Cost of side retainer and anchor bolts shall be included with Concrete Structures.

The s2(E) bars shall be placed parallel to the beams. Spacing for these bars shall be at right angles to the beams.

Anchor bolts and side retainers shall be according to Article 521.06 of the Standard Specifications. Side retainers shall be hot dip galvanized.

Anchor bolts and side retainers shall be installed as each exterior beam is erected unless an equivalent temporary means of lateral restraint is used.

DFP-I4854-L 6-15-2019

RS&H	USER NAME = BlomquiM	DESIGNED - KWY	REVISED -
		DRAWN - KWY	REVISED -
	PLOT SCALE =	CHECKED - JLR	REVISED -
	PLOT DATE = 10/3/2022	DATE - 2/18/2019	REVISED -

STATE OF ILLINOIS
DEPARTMENT OF TRANSPORTATION

PIER DIAPHRAGM DETAILS
STRUCTURE NO. 043-0063

SHEET NO. S-10 OF S-25 SHEETS

F.A.P. RTE.	SECTION	COUNTY	TOTAL SHEETS	SHEET NO.
301	24R	JO DAVIESS	594	343
		CONTRACT NO. 64B40		
		ILLINOIS FED. AID PROJECT		

FILE NAME: pw:\\rsandh-pw.bentley.com:rsandh-pw01\Documents\Transportation\Projects\130059_000_US 20 Stockton\CADStructures\0430063-D264B40-010-PierDiaphDet.dgn

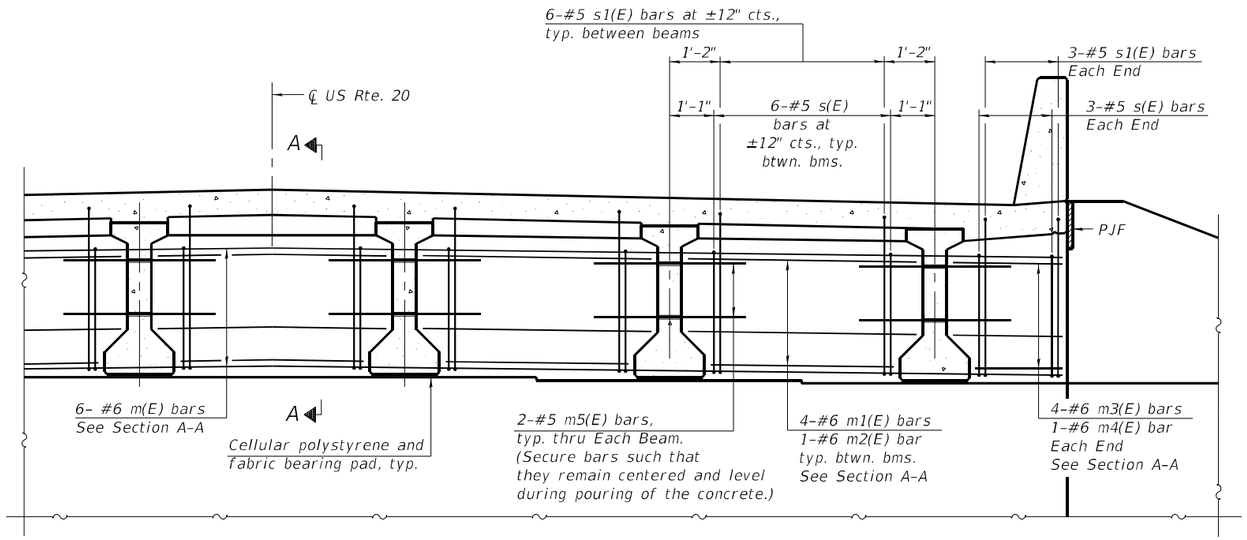

DIAPHRAGM AT ABUTMENT

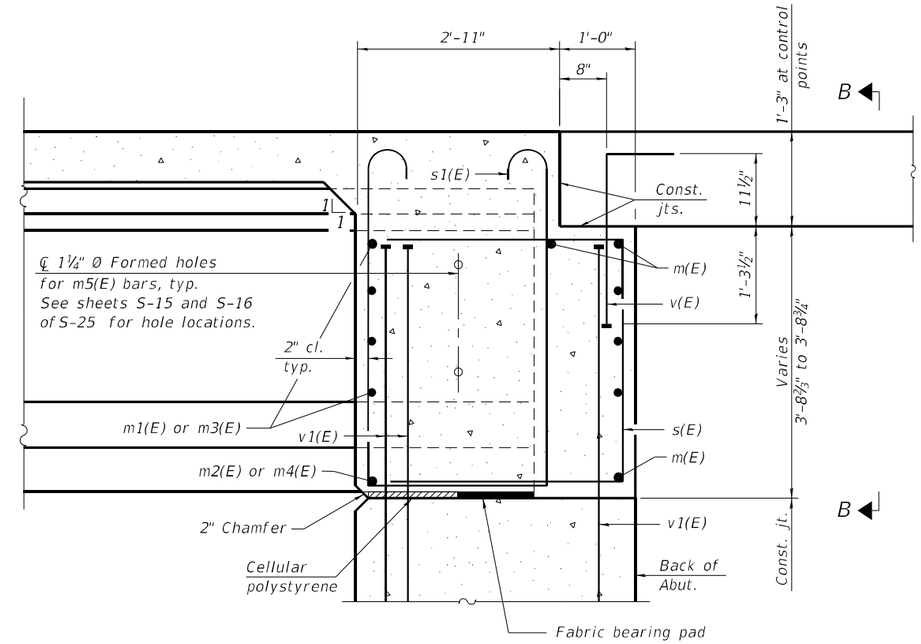

SECTION A-A

(at Rt. L's)

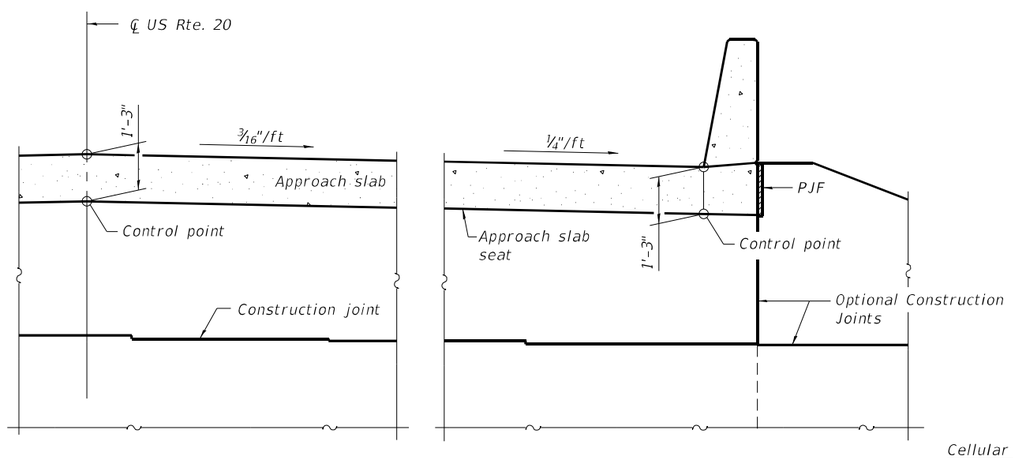

SECTION B-B

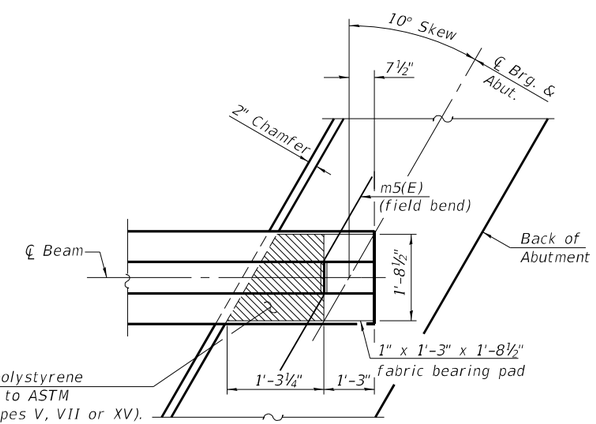

Cellular polystyrene according to ASTM C 578 (Types V, VII or XV). Provide slightly thicker piece than measured gap height to tightly fill the hatched area shown between abutment cap and bottom of beam.

PLAN AT ABUTMENT

(Showing bottom flange of beam)

Notes:

Reinforcement bars in diaphragm are billed with superstructure on sheet S-9 of S-25 .

Concrete in diaphragm is included with Concrete Superstructure on sheet S-9 of S-25 .

For details of bars s(E), s1(E) and v(E) see sheet S-9 of S-25 .

The s(E) and s1(E) bars shall be placed parallel to the beams. Spacing for these bars shall be at right angles to the beams.

The approach slab seat shall have a constant slope determined from the control points shown.

Cost of cellular polystyrene is included with Concrete Superstructure.

Beams shall be braced for stability during erection and remain braced until deck is poured and cured.

DIA-I4854-L 6-15-2019

RS&H

USER NAME = BlomquiM	DESIGNED - KWY	REVISED -	
	DRAWN - KWY	REVISED -	
PLOT SCALE =	CHECKED - JLR	REVISED -	
PLOT DATE = 10/3/2022	DATE - 2/18/2019	REVISED -	

STATE OF ILLINOIS
DEPARTMENT OF TRANSPORTATION

ABUTMENT DIAPHRAGM DETAILS
STRUCTURE NO. 043-0063

SHEET NO. S-11 OF S-25 SHEETS

F.A.P. RTE.	SECTION	COUNTY	TOTAL SHEETS	SHEET NO.
301	24R	JO DAVIESS	594	344
		CONTRACT NO. 64B40		
		ILLINOIS	FED. AID PROJECT	

FILE NAME: pw:\\rsandh-pw.bentley.com:rsandh-pw-01\Documents\Transportation Projects\130059.000 US 20 Stockton\CADd\Structures\0430063-D7648B40-011-AbutDiaphDet.dgn

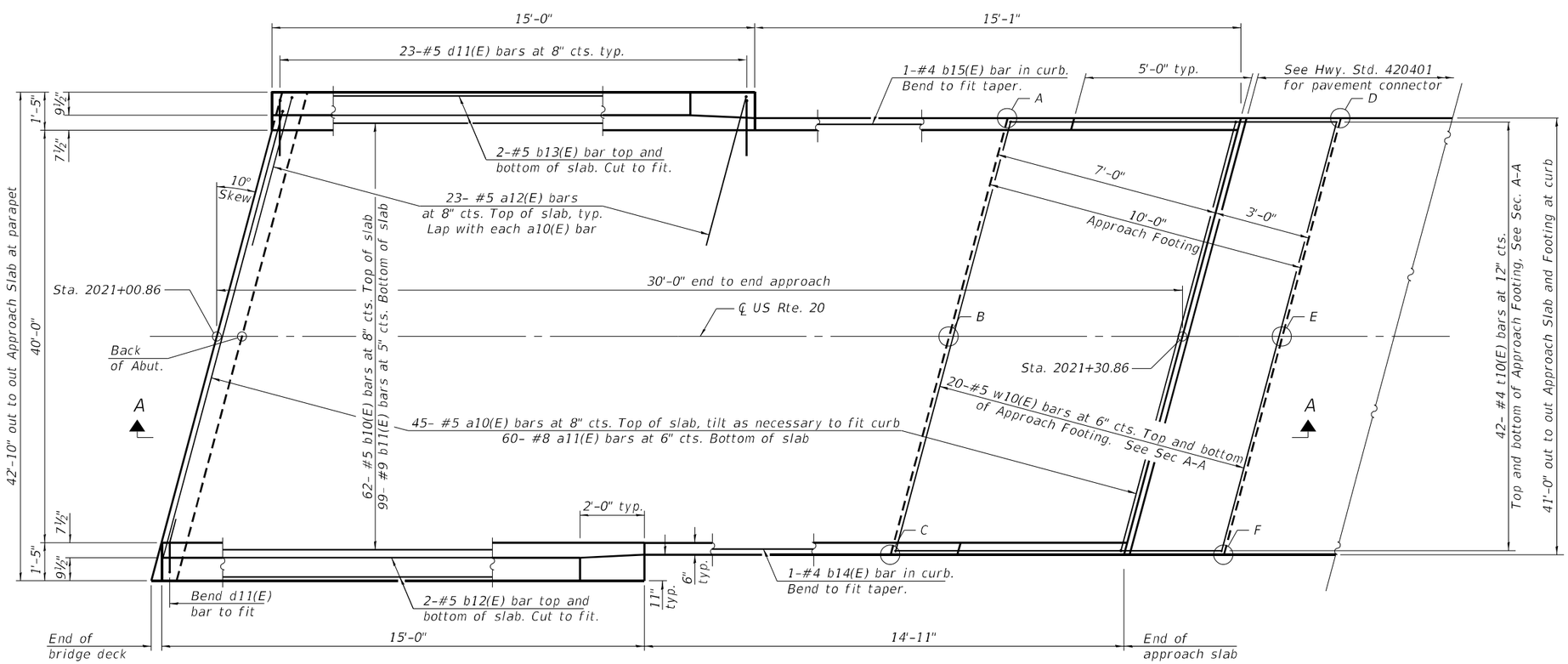

PLAN

(East Approach shown. West Approach similar)

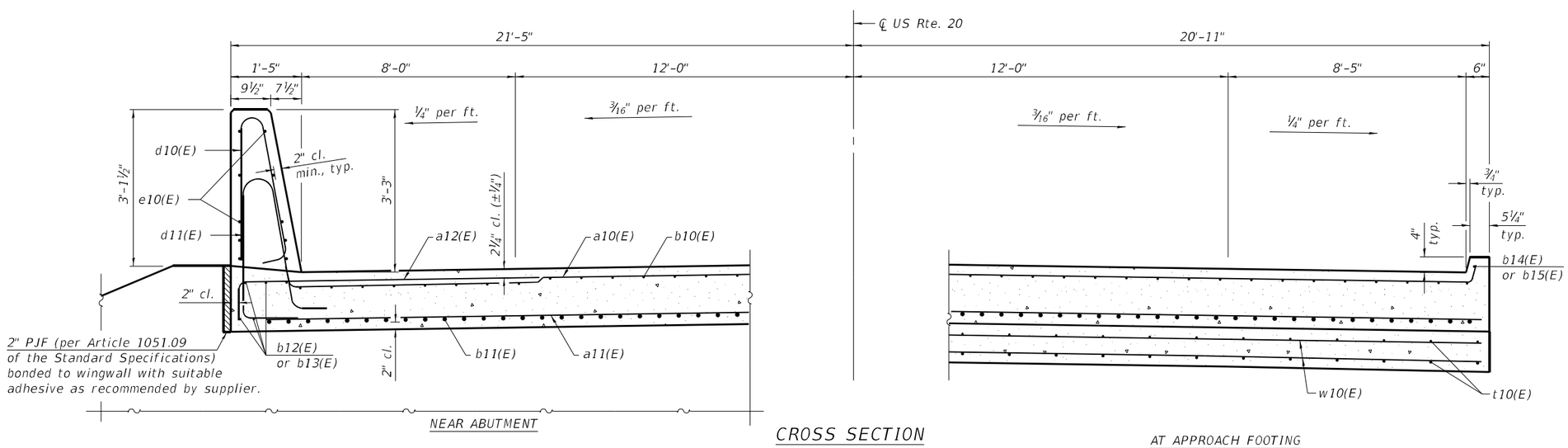

CROSS SECTION

(Looking East)

TOP AND BOTTOM ELEVATIONS FOR APPROACH FOOTING

	East Approach		West Approach	
Point	Top	Bottom	Top	Bottom
A	848.61	846.53	849.16	847.08
B	848.93	846.85	849.57	847.49
C	848.54	846.46	849.27	847.19
D	848.97	846.89	848.75	846.67
E	849.28	846.20	849.15	847.07
F	848.88	846.80	848.84	846.76

BAIA-CIP-39CS-L(≤30°) 6-15-2019

RS&H

USER NAME = BlomquiM	DESIGNED - KWY	REVISED -	
	DRAWN - KWY	REVISED -	
PLOT SCALE =	CHECKED - JLR	REVISED -	
PLOT DATE = 10/3/2022	DATE - 2/18/2019	REVISED -	

STATE OF ILLINOIS
DEPARTMENT OF TRANSPORTATION

APPROACH SLAB DETAILS (1 OF 2)
STRUCTURE NO. 043-0063

SHEET NO. S-12 OF S-25 SHEETS

F.A.P. RTE.	SECTION	COUNTY	TOTAL SHEETS	SHEET NO.
301	24R	JO DAVIESS	594	345
		CONTRACT NO. 64B40		
		ILLINOIS	FED. AID PROJECT	

FILE NAME: pw:\\pw-ad\ildot-pw-pw01\Documents\Transportation\Projects\1130059_000_US 20 Section\C4D\Structures\0430063-D764B40-012-ApprSlb\2et01.dgn

Notes:

The joint opening shall be adjusted for temperature per Article 520.04 of the Standard Specifications. However, since this detail is for jointless structures, the length of bridge used to calculate the adjustment shall be equal to half the total bridge length plus the length of the bridge approach slab.

Parapet concrete shall be paid for as Concrete Superstructure.

Approach slab shall be paid for as Concrete Superstructure (Approach Slab).

Approach footing concrete shall be paid for as Concrete Structures.

The approach footing maximum applied service bearing pressure (Qmax) = 2.0 ksf.

Cost of excavation for approach footing included with Concrete Structures.

For Granular Backfill for Structures and drainage treatment details, see sheet S-2 of S-25

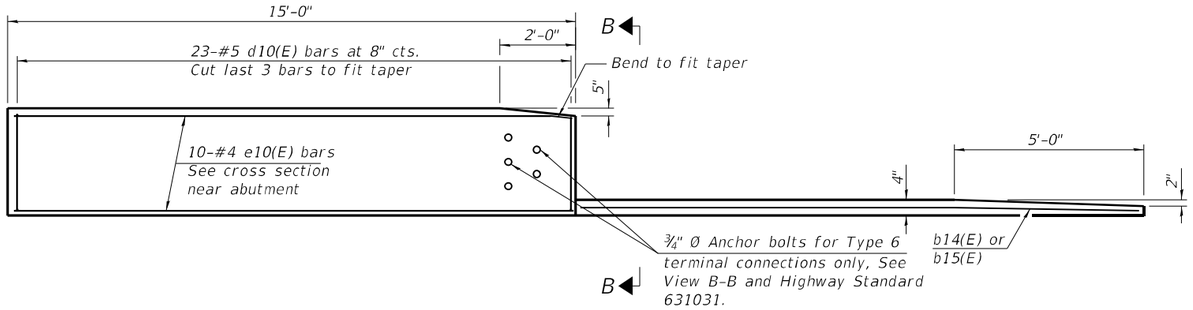

INSIDE ELEVATION OF PARAPET AND CURB

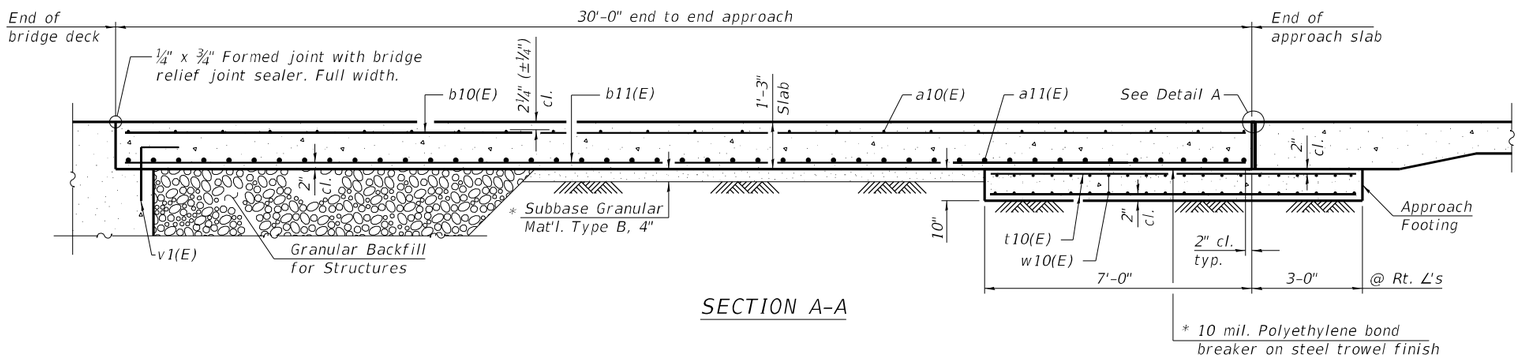

SECTION A-A

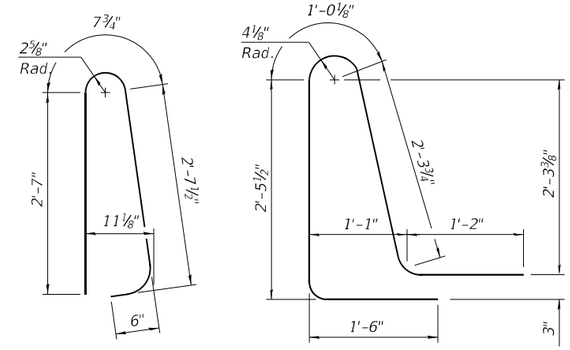

BAR d10(E)

BAR d11(E)

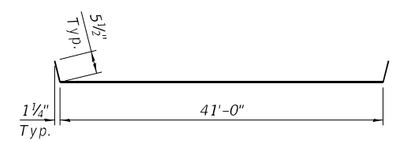

BAR a10(E)

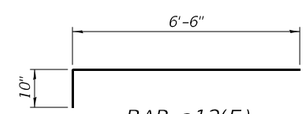

BAR a12(E)

TWO APPROACHES
BILL OF MATERIAL

Bar	No.	Size	Length	Shape
a10(E)	90	#5	41'-11"	
a11(E)	120	#8	41'-5"	
a12(E)	92	#5	7'-4"	
b10(E)	124	#5	29'-8"	
b11(E)	198	#9	29'-8"	
b12(E)	8	#5	14'-10"	
b13(E)	8	#5	14'-8"	
b14(E)	2	#4	14'-7"	
b15(E)	2	#4	14'-9"	
d10(E)	92	#5	6'-5"	
d11(E)	92	#5	8'-6"	
e10(E)	40	#4	14'-8"	
t10(E)	168	#4	9'-9"	
w10(E)	80	#5	41'-3"	
Concrete Superstructure			Cu. Yd.	8.2
Concrete Superstructure (Approach Slab)			Cu. Yd.	119.1
Concrete Structures			Cu. Yd.	26.5
Reinforcement Bars, Epoxy Coated			Pound	48,160

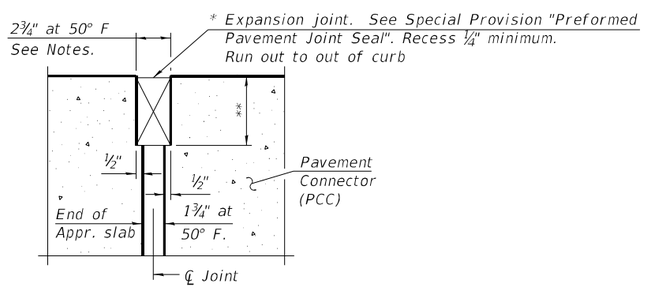

DETAIL A
(@ Rt. ∠'s)

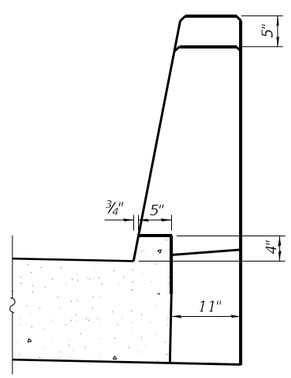

VIEW B-B

* Cost included with Concrete Superstructure (Approach Slab).

** Per manufacturer recommendations

FILE NAME: pw:\\rs-dh-pw.bentley.com:rsandh-pw-01\Documents\Transportation\Projects\1130059,000 US 20 Stockton\CAD\Structures\0430063-D764B40-013-Appr&Slb2Ab02.dgn

USER NAME = BlomquiM	DESIGNED - KWY	REVISED -	
	DRAWN - KWY	REVISED -	
PLOT SCALE =	CHECKED - JLR	REVISED -	
PLOT DATE = 10/3/2022	DATE - 2/18/2019	REVISED -	

RS&H

STATE OF ILLINOIS
DEPARTMENT OF TRANSPORTATION

APPROACH SLAB DETAILS (2 OF 2)
STRUCTURE NO. 043-0063

SHEET NO. S-13 OF S-25 SHEETS

F.A.P. RTE.	SECTION	COUNTY	TOTAL SHEETS	SHEET NO.
301	24R	JO DAVIESS	594	346
		CONTRACT NO. 64B40		
		ILLINOIS	FED. AID PROJECT	

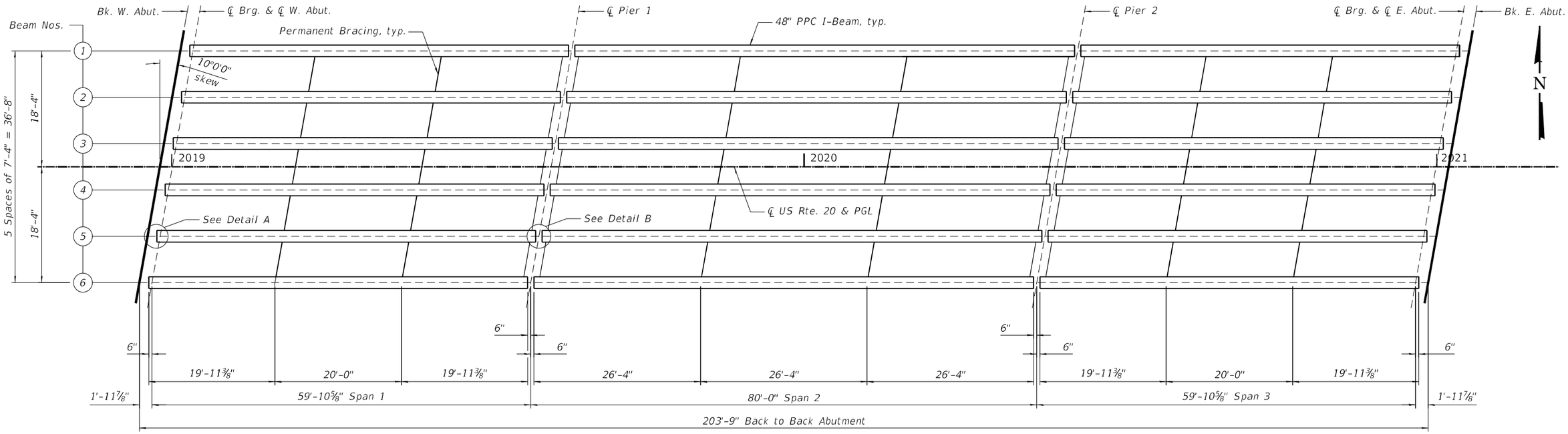

PLAN

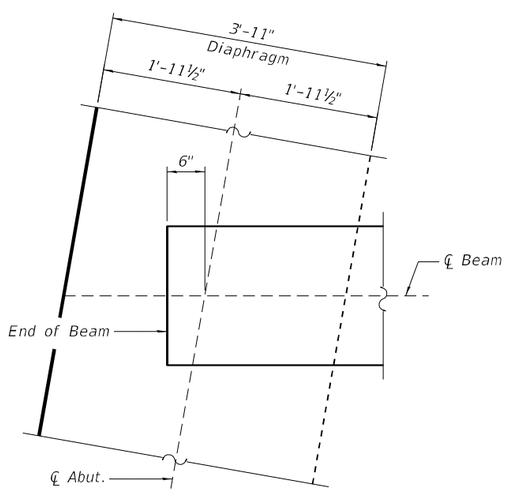

DETAIL A

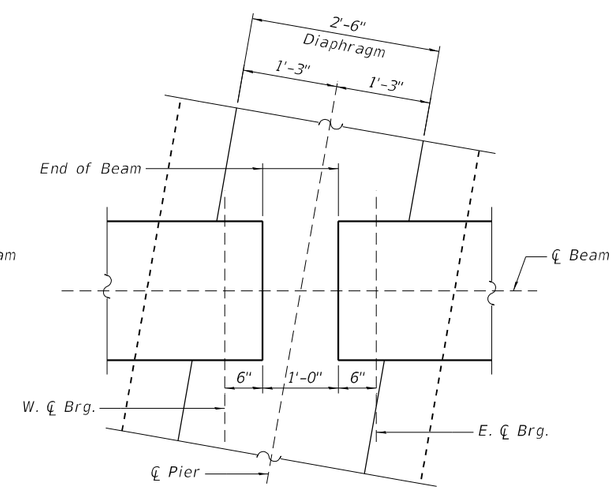

DETAIL B

INTERIOR BEAM MOMENT TABLE				
		0.4 Sp. 1 0.6 Sp. 3	Pier 1 or 2	0.5 Sp. 2
I	(in^4)	144129	144129	144129
I'	(in^4)	430366	430366	430366
Sb	(in^3)	6837	6837	6837
Sb'	(in^3)	11588	11588	11588
St	(in^3)	5354	5354	5354
St'	(in^3)	39629	39629	39629
DC1	(k/')	1.364	1.364	1.364
MDC1	('k)	566.2	0.0	1036.5
DC2	(k/')	0.175	0.175	0.175
MDC2	('k)	40.2	-81.3	51.6
DW	(k/')	0.333	0.333	0.333
MDW	('k)	76.5	-155.1	98.3
M^{LL+IM}	('k)	741.6	-749.6	779.8

INTERIOR BEAM REACTION TABLE				
		Abut.	Pier 1 Span 1 Pier 2 Span 3	Pier 1 Span 2 Pier 2 Span 2
RDC1	(k)	40.2	40.2	53.2
* RDC2	(k)	3.8	6.5	6.5
* RDW	(k)	7.2	12.7	12.7
* R^{LL+IM}	(k)	76.0	122.9	122.9
RTotal	(k)	127.2	182.3	195.3

* At continuous piers, reactions from composite loads are assumed to be equally distributed to each bearing line.

I: Non-composite moment of inertia of beam section ($in.^4$).
I': Composite moment of inertia of beam section ($in.^4$).
Sb: Non-composite section modulus for the bottom fiber of the prestressed beam ($in.^3$).
Sb': Composite section modulus for the bottom fiber of the prestressed beam ($in.^3$).
St: Non-composite section modulus for the top fiber of the prestressed beam ($in.^3$).
St': Composite section modulus for the top fiber of the prestressed beam ($in.^3$).
DC1: Un-factored non-composite dead load (kips/ft.).
MDC1: Un-factored moment due to non-composite dead load (kip-ft.).
DC2: Un-factored long-term composite (superimposed excluding future wearing surface) dead load (kips/ft.).
MDC2: Un-factored moment due to long-term composite (superimposed excluding future wearing surface) dead load (kip-ft.).
DW: Un-factored long-term composite (superimposed future wearing surface only) dead load (kips/ft.).
MDW: Un-factored moment due to long-term composite (superimposed future wearing surface only) dead load (kip-ft).
M^{LL+IM}: Un-factored live load moment plus dynamic load allowance (impact) (kip-ft.).

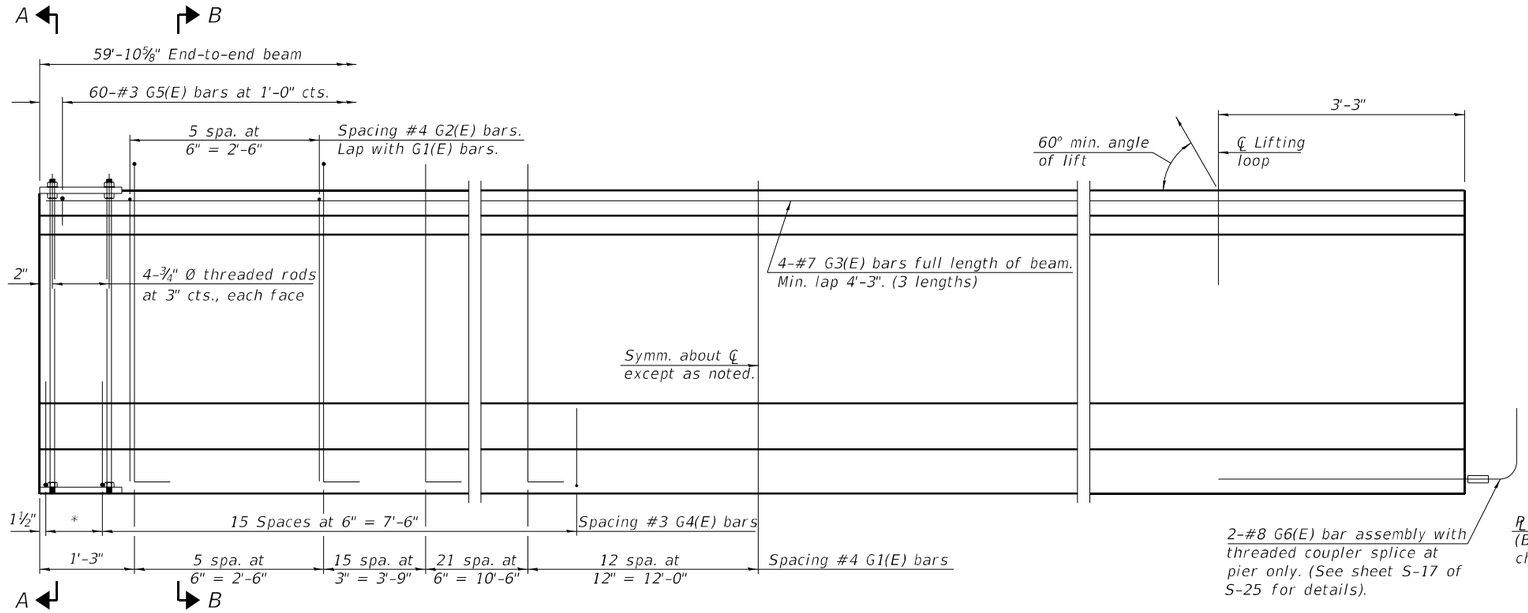

*3 spaces at 3" = 9"

ELEVATION OF BEAM
(Showing reinforcement & dimensions)

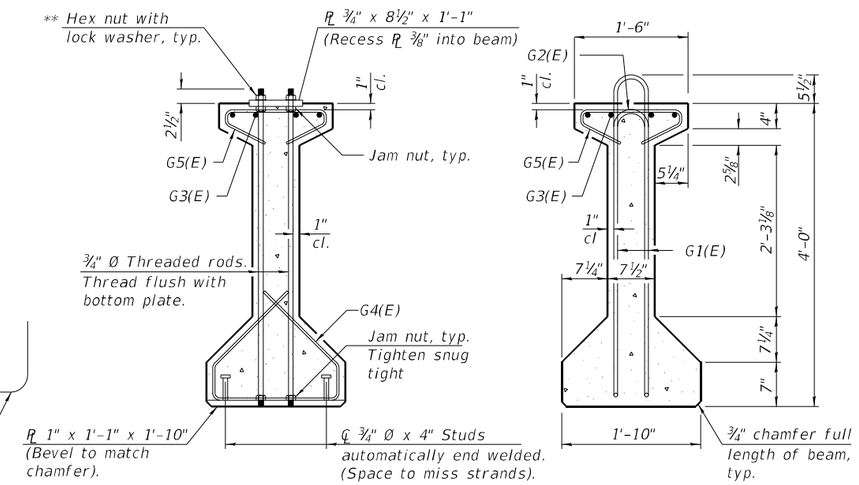

SECTION A-A
** Only tighten sufficiently to compress lock washers

SECTION B-B

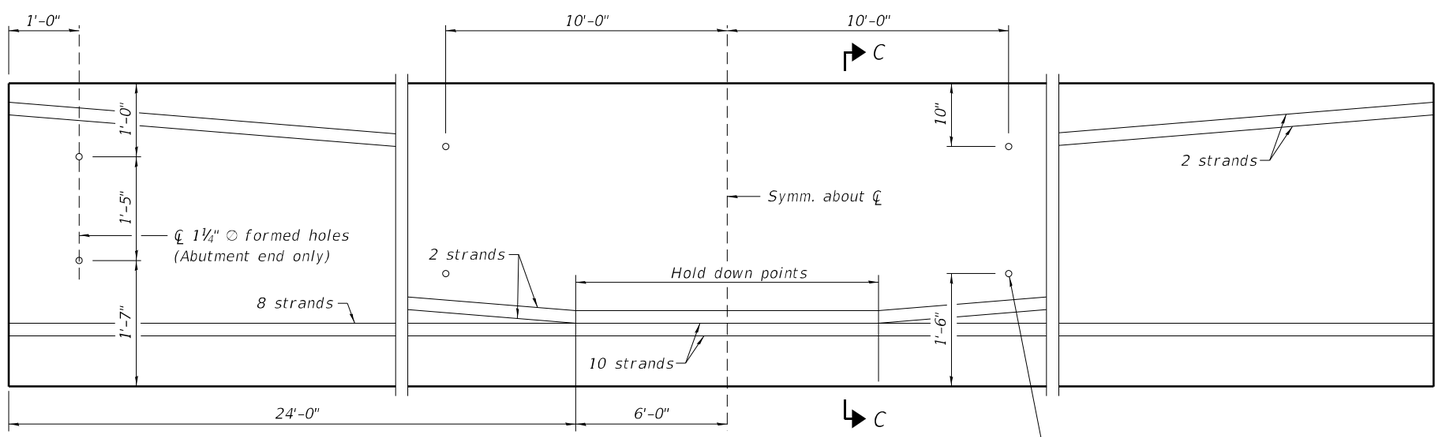

ELEVATION OF BEAM
(Showing prestressing steel)

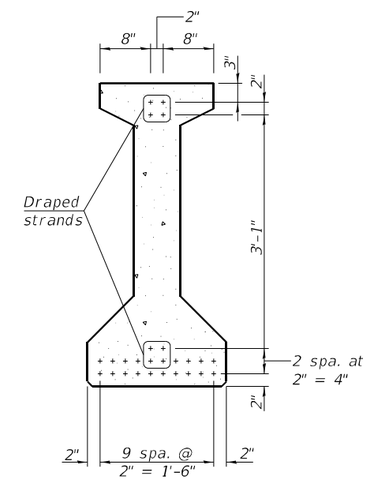

SECTION C-C
(22-½" Ø 270 ksi strands)

BAR LIST
ONE BEAM ONLY
(For information only)

Bar	No.	Size	Length	Shape
G1(E)	107	#4	9'-8"	
G2(E)	12	#4	7'-11"	
G3(E)	12	#7	22'-10"	
G4(E)	38	#3	5'-3"	
G5(E)	60	#3	2'-9"	
G6(E)	2	#8	6'-6"	

Notes:
See sheet S-17 of S-25 for additional details and Bill of Material.

FILE NAME: pw:\\rsandh-pw.bentley.com:rsandh-pw01\Documents\Transportation\Projects\13005_000 US 20 Stockton\CADStructures\0430063-D64B40-01-S-PPCIBeam01.dgn

RS&H	USER NAME = BlomquiM	DESIGNED - JIK	REVISED -
		DRAWN - JIK	REVISED -
	PLOT SCALE =	CHECKED - JLR	REVISED -
	PLOT DATE = 10/3/2022	DATE - 2/18/2019	REVISED -

STATE OF ILLINOIS
DEPARTMENT OF TRANSPORTATION

48" PPC I-BEAM (SPANS 1 AND 3)
STRUCTURE NO. 043-0063

SHEET NO. S-15 OF S-25 SHEETS

F.A.P. RTE.	SECTION	COUNTY	TOTAL SHEETS	SHEET NO.
301	24R	JO DAVIESS	594	348
		CONTRACT NO. 64B40		
		ILLINOIS	FED. AID PROJECT	

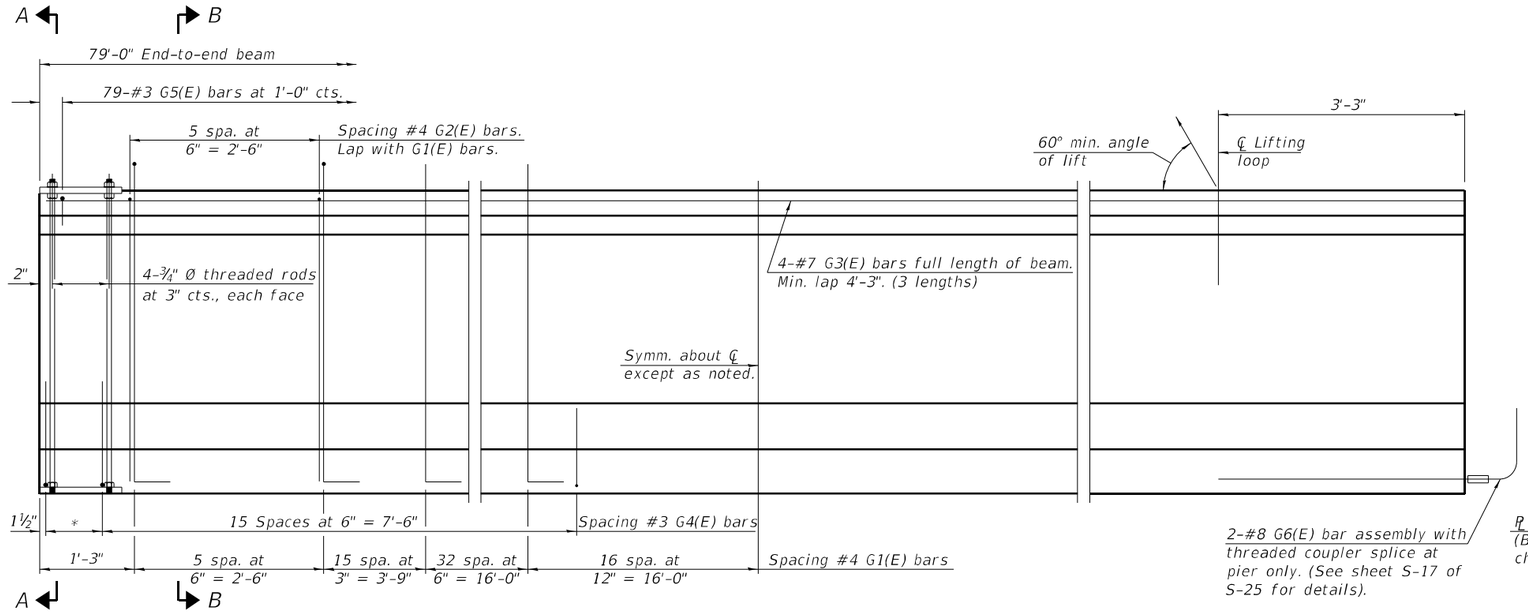

*3 spaces at 3" = 9"

ELEVATION OF BEAM
(Showing reinforcement & dimensions)

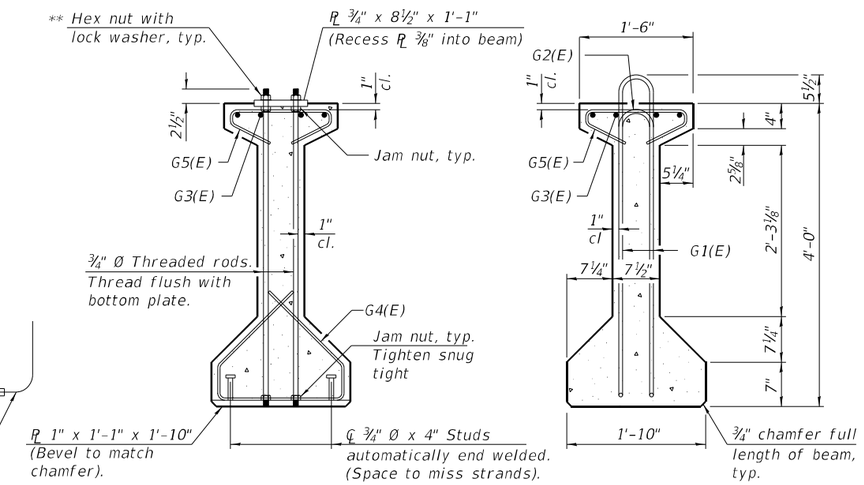

SECTION A-A
** Only tighten sufficiently to compress lock washers

SECTION B-B

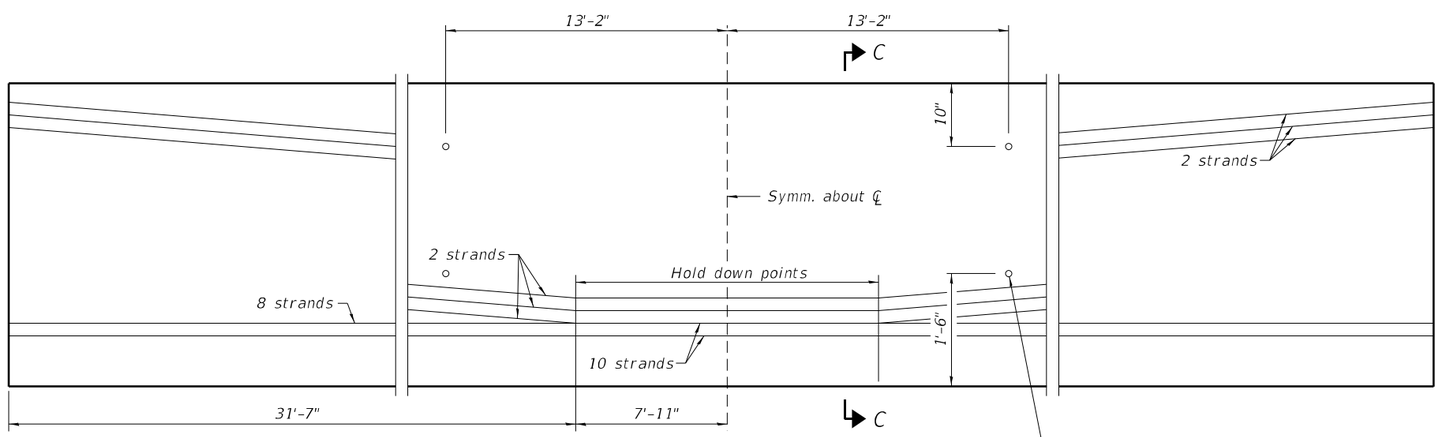

ELEVATION OF BEAM
(Showing prestressing steel)

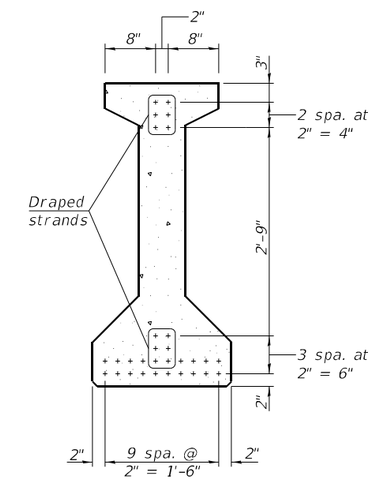

SECTION C-C
(24-½" Ø 270 ksi strands)

BAR LIST
ONE BEAM ONLY
(For information only)

Bar	No.	Size	Length	Shape
G1(E)	137	#4	9'-8"	
G2(E)	12	#4	7'-11"	
G3(E)	12	#7	29'-2"	
G4(E)	38	#3	5'-3"	
G5(E)	79	#3	2'-9"	
G6(E)	4	#8	6'-6"	

Notes:
See sheet S-17 of S-25 for additional details and Bill of Material.

FILE NAME: pw:\\rsandh-pw.bentley.com:rsandh-pw01\Documents\Transportation\Projects\130059.000 US 20 Stockton\CADStructures\0430063-D64B40-D16-PPCIBeam02.dgn

RS&H	USER NAME = BlomquiM	DESIGNED - JIK	REVISED -
		DRAWN - JIK	REVISED -
	PLOT SCALE =	CHECKED - JLR	REVISED -
	PLOT DATE = 10/3/2022	DATE - 2/18/2019	REVISED -

STATE OF ILLINOIS
DEPARTMENT OF TRANSPORTATION

48" PPC I-BEAM (SPAN 2)
STRUCTURE NO. 043-0063

SHEET NO. S-16 OF S-25 SHEETS

F.A.P. RTE.	SECTION	COUNTY	TOTAL SHEETS	SHEET NO.
301	24R	JO DAVIESS	594	349
		CONTRACT NO. 64B40		
		ILLINOIS	FED. AID PROJECT	

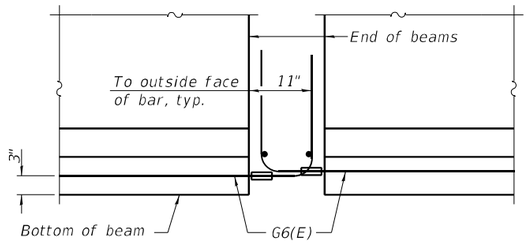

ELEVATION OF BEAM AT PIER

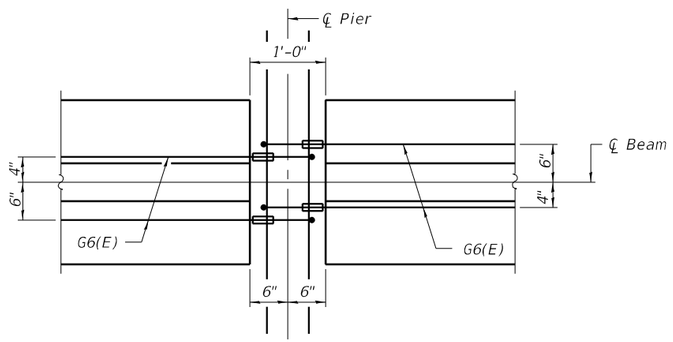

PLAN OF BEAM AT PIER

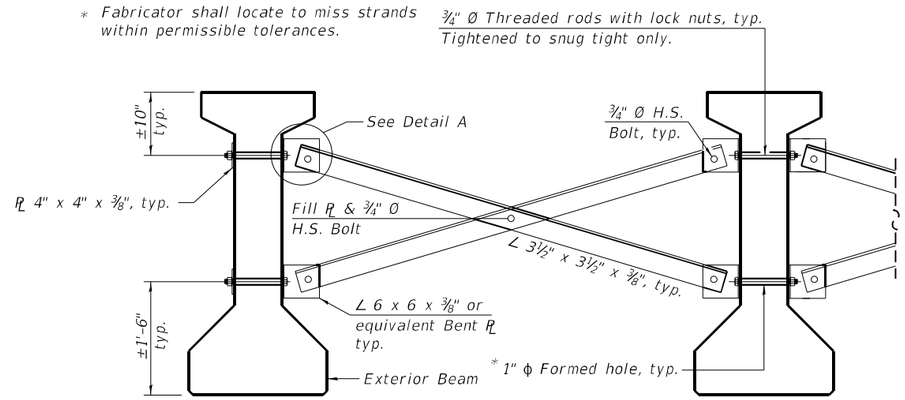

PERMANENT BRACING DETAILS

NOTES

Inserts for ¾" Ø threaded dowel rods, when specified, are to be two strut, ferrule type for interior beams and single ferrule, flared loop type for exterior beams.

Prestressing steel shall be uncoated high strength, low relaxation 7-wire strand, Grade 270. The nominal diameter shall be ½" and the nominal cross-sectional area shall be 0.153 sq. in.

The beams shall have a final concrete compressive strength, f'c, of 7,000 psi and a release concrete compressive strength, f'ci, of 6,000 psi.

A minimum 2½" Ø lifting pin shall be used to engage the lifting loops during handling.

Tilt G6(E) bars when necessary to maintain 1½" clearance.

The top and bottom plates shall be AASHTO M270 Grade 50.

The top and bottom plates shall be galvanized according to AASHTO M111. The threaded rods, nuts and washers shall be galvanized according to AASHTO M232.

Threaded rods shall be ASTM F 1554 Grade 55.

The G6(E) bar assembly shall develop, in tension, at least 125 percent of the yield strength of a grade 60 reinforcement bar times the nominal cross-sectional area of a #8 bar. The assembly shall allow completion of the splice without turning of the hook bar. The hook bar shall be threaded such that the entire coupler can be threaded onto the hook bar.

All material for bracing shall be hot dip galvanized according to AASHTO M111 unless otherwise noted.

Two hardened washers are required for each set of oversized holes.

All holes shall be 15/16" Ø unless otherwise noted.

5/16" x 3" x 3" plate washers are required over all slotted holes.

All bolts, threaded rods, and hardware shall be galvanized according to AASHTO M232.

Threaded rods shall be ASTM F 1554 Grade 55.

Bracing shall be installed as beams are erected and tightened as soon as possible during erection.

Permanent bracing shall not be paid for separately, but shall be included in the cost of Furnishing and Erecting Precast Prestressed Concrete Beams.

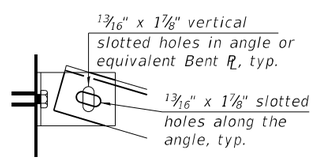

DETAIL A

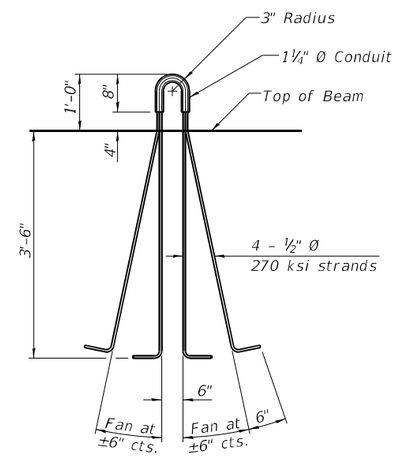

LIFTING LOOP DETAIL

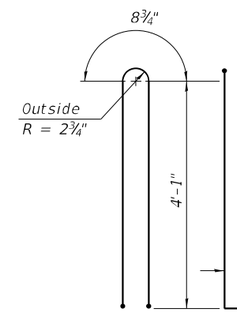

BAR G1(E)

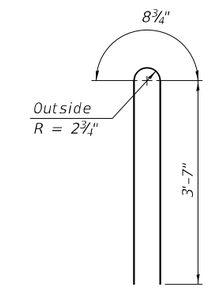

BAR G2(E)

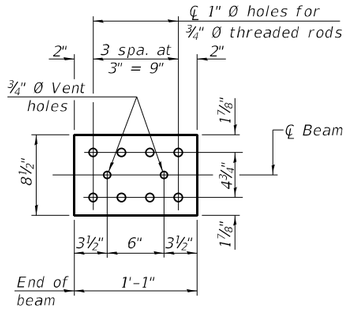

TOP PLATE

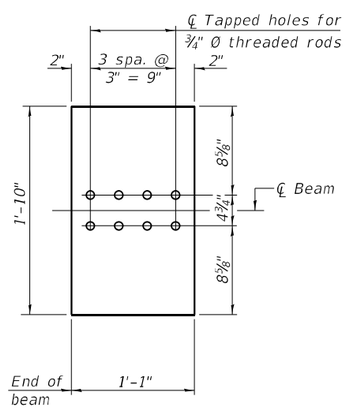

BOTTOM PLATE

(Showing threaded rods)

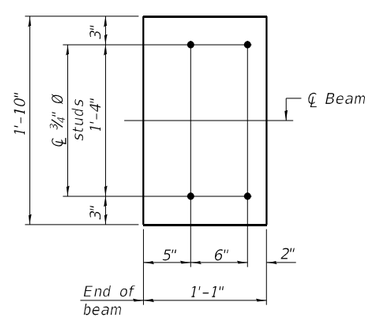

BOTTOM PLATE

(Showing studs)

See bearing details for pintle hole locations when required.

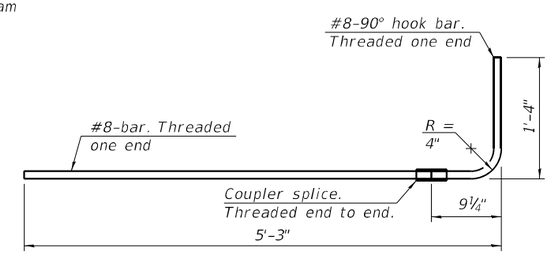

G6(E) BAR ASSEMBLY

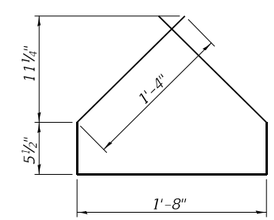

BAR G4(E)

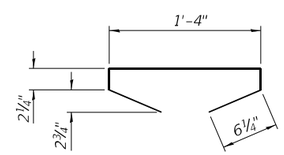

BAR G5(E)

BILL OF MATERIAL

Item	Unit	Total
Furnishing and Erecting Precast Prestressed Concrete I-Beams, 48"	Ft.	1,193

USER NAME = Klenckl	DESIGNED - JIK	REVISED -	
	DRAWN - JIK	REVISED -	
PLOT SCALE =	CHECKED - JLR	REVISED -	
PLOT DATE = 3/17/2025	DATE - 2/18/2019	REVISED -	

STATE OF ILLINOIS
DEPARTMENT OF TRANSPORTATION

48" PPC I-BEAM DETAILS
STRUCTURE NO. 043-0063

SHEET NO. S-17 OF S-25 SHEETS

F.A.P. RTE.	SECTION	COUNTY	TOTAL SHEETS	SHEET NO.
301	24R	JO DAVIESS	594	350
		CONTRACT NO. 64B40		
		ILLINOIS FED. AID PROJECT		

FILE NAME: pw:\\rsh-ow.bentley.com:rsandh-pw01\Documents\Transportation\Projects\130059.000_US_20_Stockton\CAD\Structures\043063-J976B40-B12-PPCIBeams03.dgn

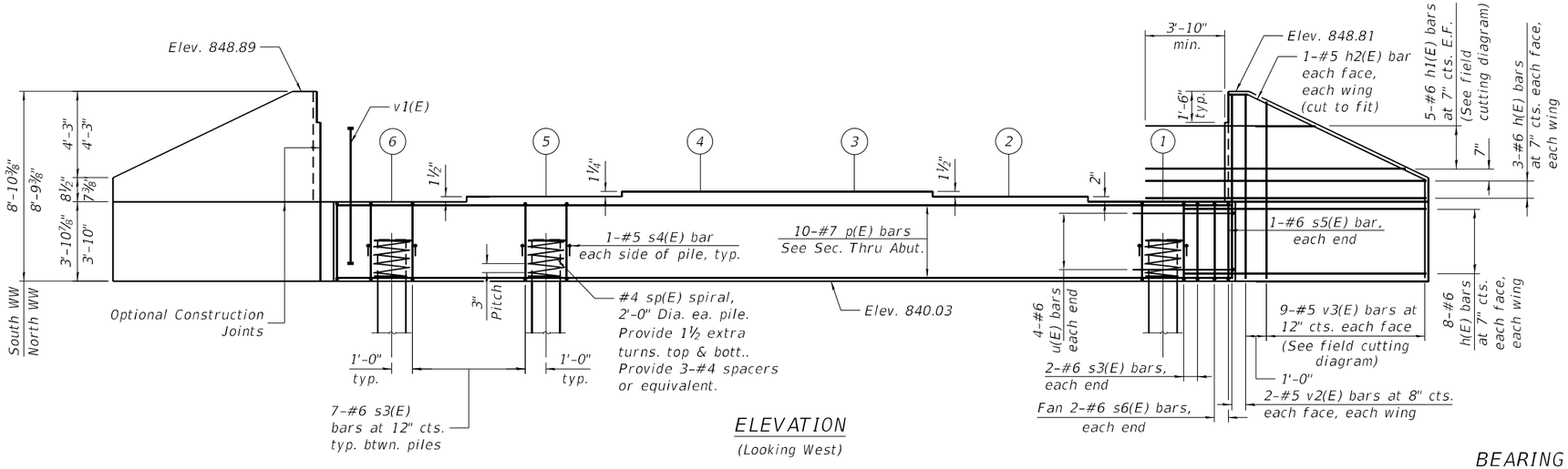

ELEVATION

(Looking West)

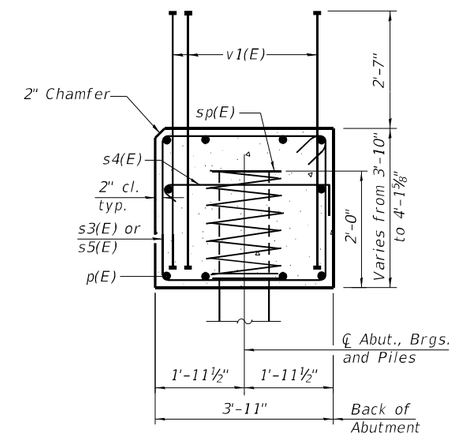

SEC. THRU ABUT.

Dimensions at right angles to abutment

BEARING SEAT ELEVATIONS

Beam	Elevation
1	843.83
2	844.00
3	844.13
4	844.14
5	844.04
6	843.91

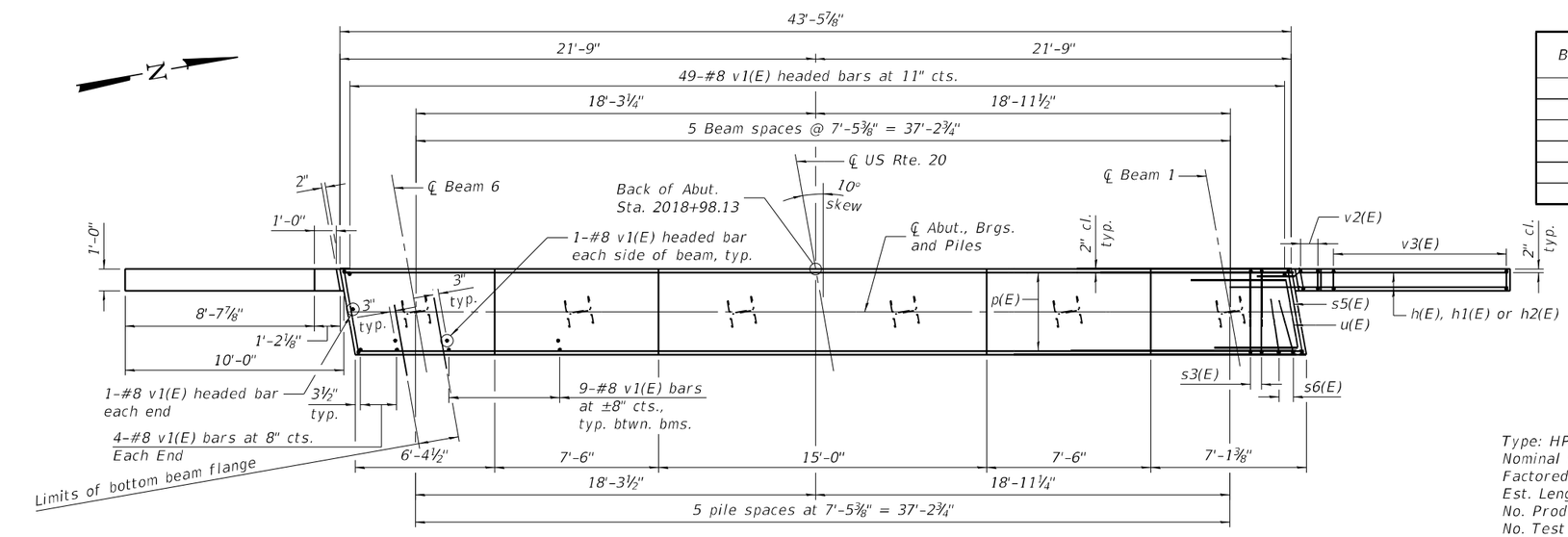

PLAN

PILE DATA

Type: HP 14x73 with pile shoes
Nominal Required Bearing: 578 kips
Factored Resistance Available: 318 kips
Est. Length: 47 ft
No. Production Piles: 5
No. Test Piles: 1

WEST ABUTMENT BILL OF MATERIAL

Bar	No.	Size	Length	Shape
h(E)	44	#6	13'-10"	
h1(E)	10	#6	21'-1"	
h2(E)	4	#5	10'-3"	
p(E)	10	#7	43'-2"	
s3(E)	39	#6	15'-4"	
s4(E)	12	#5	4'-7"	
s5(E)	2	#6	15'-0"	
s6(E)	4	#6	8'-5"	
* sp(E)	6	#4	2'-0"	
u(E)	8	#6	12'-3"	
v1(E)	116	#8	5'-11"	
v2(E)	8	#5	8'-5"	
v3(E)	18	#5	12'-0"	
Structure Excavation	Cu. Yd.		110	
Concrete Structures	Cu. Yd.		30.3	
Reinforcement Bars, Epoxy Coated	Pound		5,770	
Furnishing Steel Piles HP14x73	Foot		235	
Driving Piles	Foot		235	
Test Pile Steel HP14x73	Each		1	
Pile Shoes	Each		6	

* Length is height of spiral

Notes:
Pour steps monolithically with cap.
Headed bars shall conform to ASTM A970 with threaded attachment; Class HA; and reinforcement bars conforming to ASTM A706. Cost included with Reinforcement Bars, Epoxy Coated.
For details of piles see Sheet S-22 of S-25

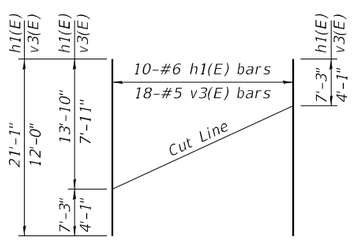

FIELD CUTTING DIAGRAM

Order h1(E) and v3(E) full length. Cut as shown and use remainder of bars in opposite face.

BAR v1(E)

(Headed)

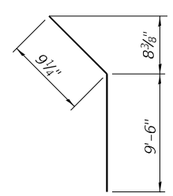

BAR h2(E)

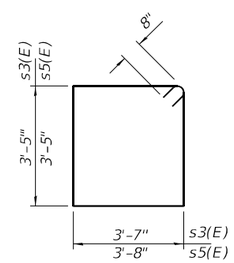

BAR s3(E) & s5(E)

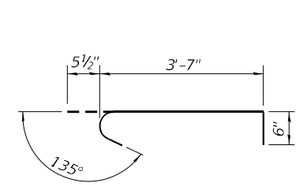

BAR s4(E)

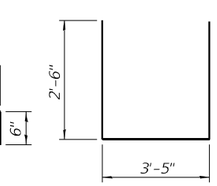

BAR s6(E)

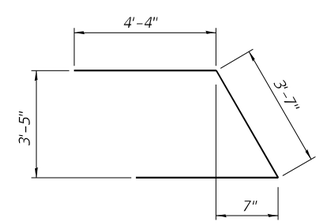

BAR u(E)

AI-CBS-L 6-15-2019

RS&H	USER NAME = BlomquiM	DESIGNED - KWY	REVISED -
		DRAWN - KWY	REVISED -
	PLOT SCALE =	CHECKED - JLR	REVISED -
	PLOT DATE = 10/3/2022	DATE - 2/18/2019	REVISED -

STATE OF ILLINOIS
DEPARTMENT OF TRANSPORTATION

WEST ABUTMENT DETAILS
STRUCTURE NO. 043-0063

SHEET NO. S-18 OF S-25 SHEETS

F.A.P. RTE.	SECTION	COUNTY	TOTAL SHEETS	SHEET NO.
301	24R	JO DAVIESS	594	351
		CONTRACT NO. 64B40		
		ILLINOIS	FED. AID PROJECT	

FILE NAME: pw:\\rsh-pw.bentley.com:rsandh-pw-01\Documents\Transportation\Projects\130059.000 US 20 Stockton\C4DStructures\043063-D764B40-018-WAbutment.dgn

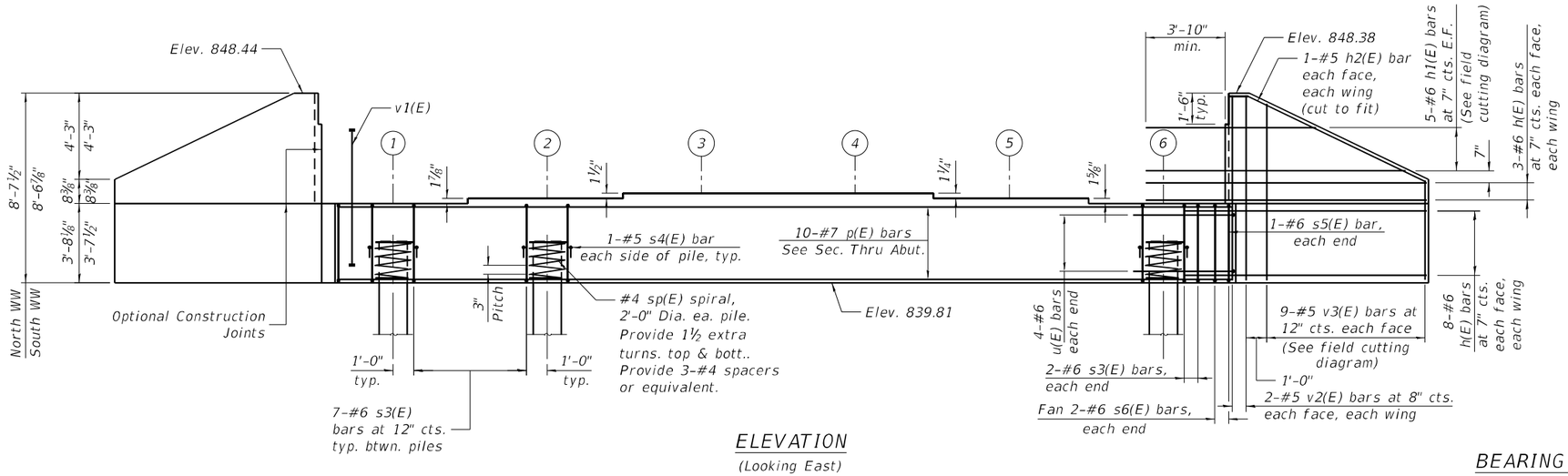

ELEVATION

(Looking East)

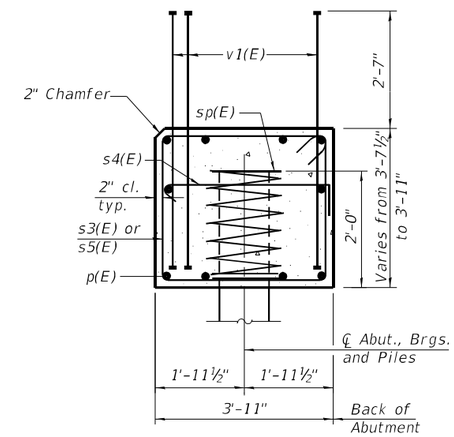

SEC. THRU ABUT.

Dimensions at right angles to abutment

BEARING SEAT ELEVATIONS

Beam	Elevation
1	843.68
2	843.82
3	843.92
4	843.91
5	843.78
6	843.62

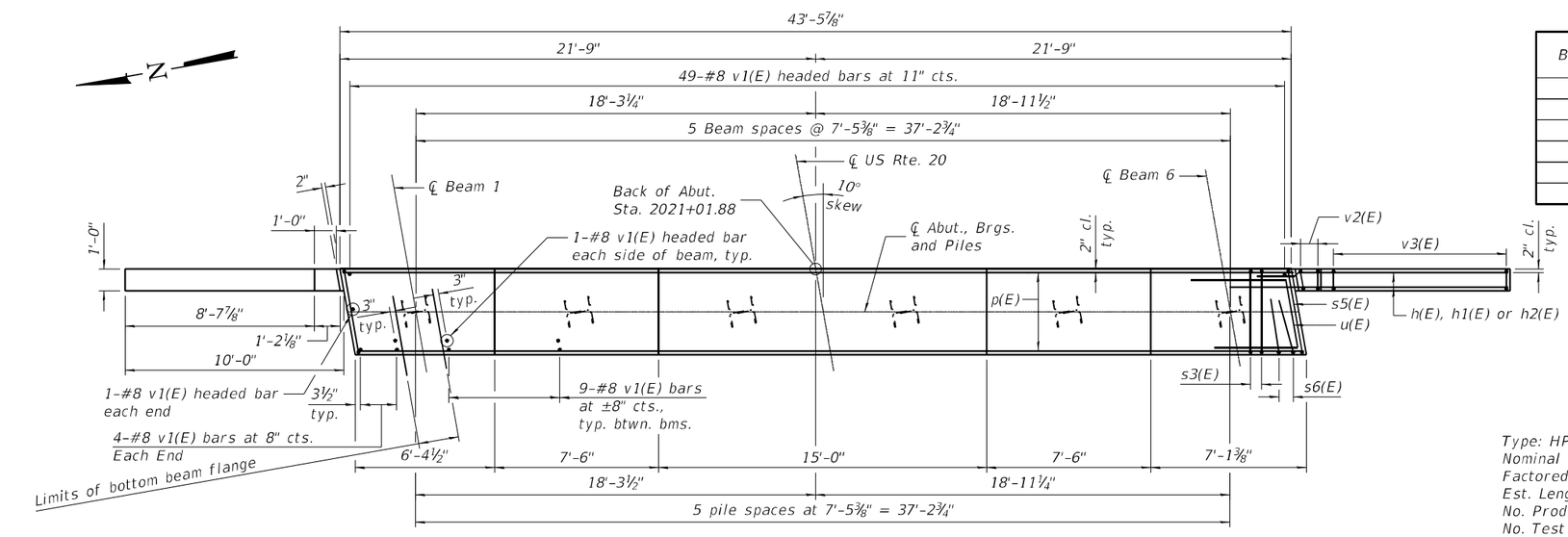

PLAN

PILE DATA

Type: HP 14x73 with pile shoes
Nominal Required Bearing: 578 kips
Factored Resistance Available: 318 kips
Est. Length: 45 ft
No. Production Piles: 5
No. Test Piles: 1

EAST ABUTMENT BILL OF MATERIAL

	Bar	No.	Size	Length	Shape
	h(E)	44	#6	13'-10"	
	h1(E)	10	#6	21'-1"	
	h2(E)	4	#5	10'-3"	
	p(E)	10	#7	43'-2"	
	s3(E)	39	#6	14'-10"	
	s4(E)	12	#5	4'-7"	
	s5(E)	2	#6	15'-0"	
	s6(E)	4	#6	8'-2"	
*	sp(E)	6	#4	2'-0"	
	u(E)	8	#6	12'-3"	
	v1(E)	116	#8	5'-11"	
	v2(E)	8	#5	8'-2"	
	v3(E)	18	#5	11'-10"	
	Structure Excavation	Cu. Yd.		110	
	Concrete Structures	Cu. Yd.		30.1	
	Reinforcement Bars, Epoxy Coated	Pound		5,730	
	Furnishing Steel Piles HP14x73	Foot		225	
	Driving Piles	Foot		225	
	Test Pile Steel HP14x73	Each		1	
	Pile Shoes	Each		6	

* Length is height of spiral

Notes:
Pour steps monolithically with cap.
Headed bars shall conform to ASTM A970 with threaded attachment; Class HA; and reinforcement bars conforming to ASTM A706. Cost included with Reinforcement Bars, Epoxy Coated.
For details of piles see Sheet S-22 of S-25

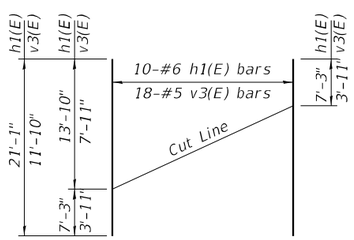

FIELD CUTTING DIAGRAM

Order h1(E) and v3(E) full length. Cut as shown and use remainder of bars in opposite face.

BAR v1(E)

(Headed)

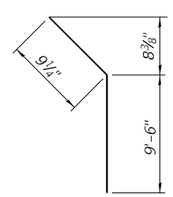

BAR h2(E)

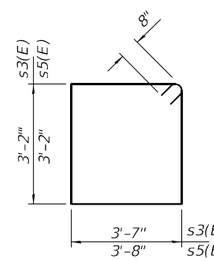

BAR s3(E) & s5(E)

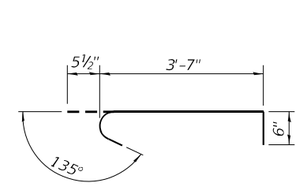

BAR s4(E)

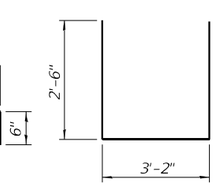

BAR s6(E)

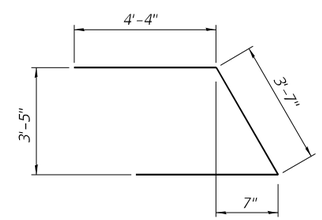

BAR u(E)

AI-CBS-L 6-15-2019

RS&H	USER NAME = BlomquiM	DESIGNED - KWY	REVISED -
		DRAWN - KWY	REVISED -
	PLOT SCALE =	CHECKED - JLR	REVISED -
	PLOT DATE = 10/3/2022	DATE - 2/18/2019	REVISED -

STATE OF ILLINOIS
DEPARTMENT OF TRANSPORTATION

EAST ABUTMENT DETAILS
STRUCTURE NO. 043-0063

SHEET NO. S-19 OF S-25 SHEETS

F.A.P. RTE.	SECTION	COUNTY	TOTAL SHEETS	SHEET NO.
301	24R	JO DAVIESS	594	352
		CONTRACT NO. 64B40		
		ILLINOIS	FED. AID PROJECT	

FILE NAME: pw:\\rsandh-pw.bentley.com:rsandh-pw-01\Documents\Transportation\Projects\130059.000 US 20 Stockton\C4DStructures\0430063-D764B40-01-S-EAbutment.dgn

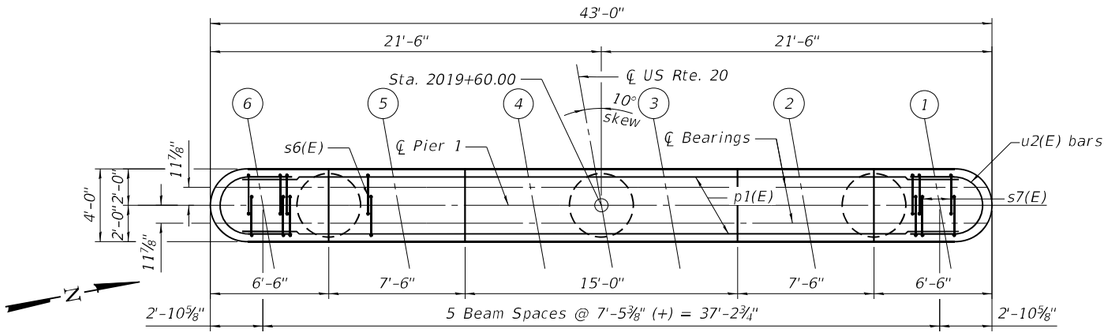

TOP PLAN

BEARING SEAT ELEVATIONS

Beam	Elevation
1	843.30
2	843.46
3	843.58
4	843.58
5	843.48
6	843.34

* If the prevailing water surface elevation during construction is consistently different than estimated on the plans, the contractor may propose an adjustment to the top of the drilled shaft elevation as part of their installation procedure. The top of all drilled shafts within a substructure unit shall be constructed to the same elevation and extend above the prevailing water surface. The quantities and reinforcement detailing are based on the top of shaft and the estimated elevations shown and may change based on the actual elevations encountered at each shaft and the final top of shaft elevation.

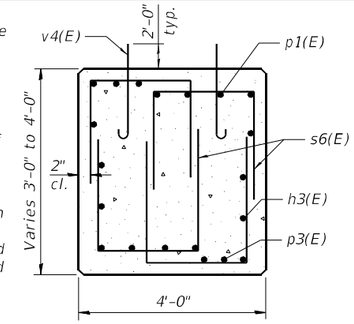

SECTION A-A

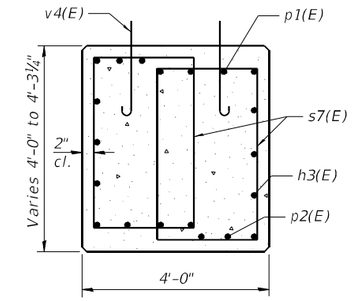

SECTION B-B

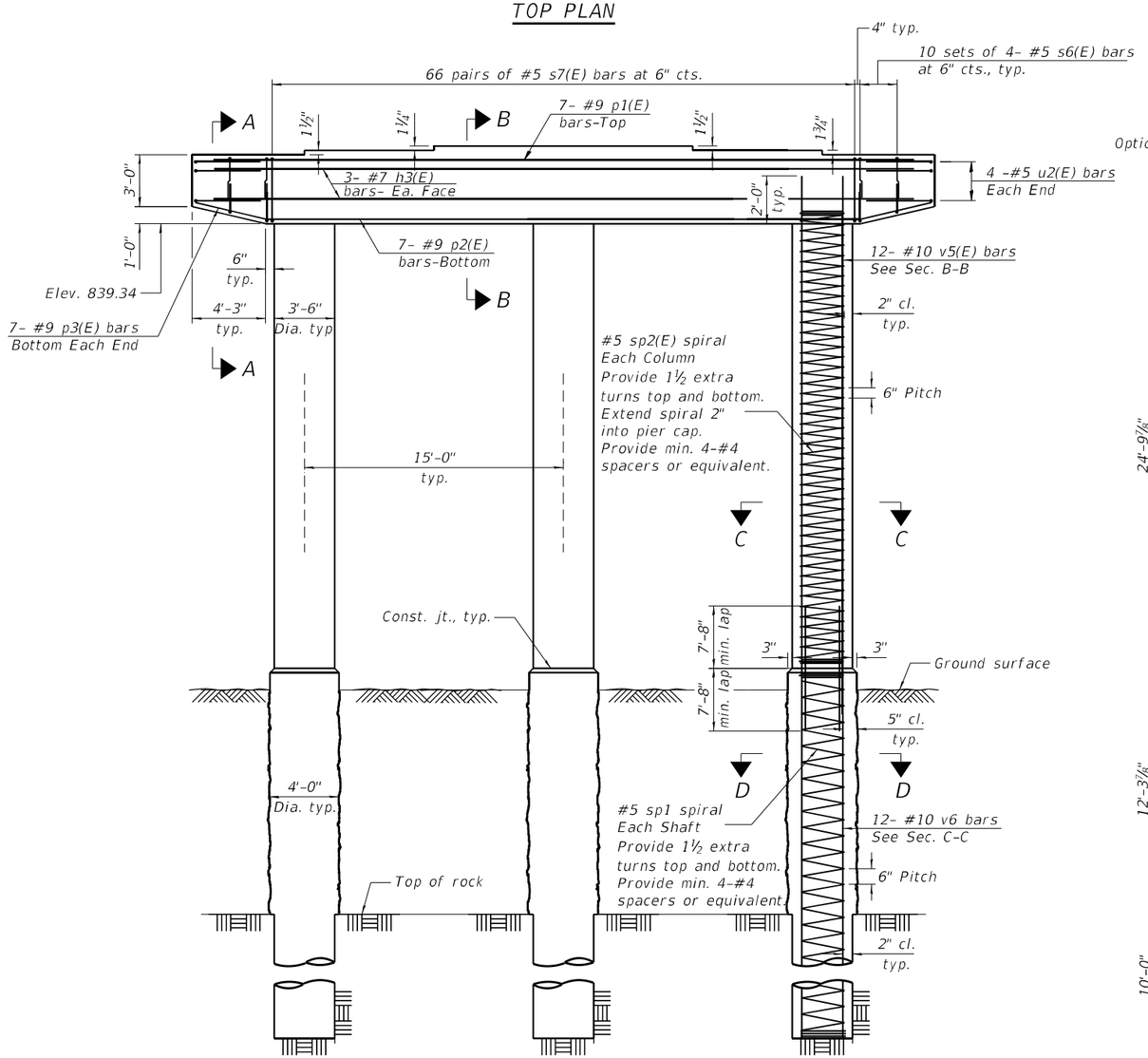

ELEVATION
(Looking West)

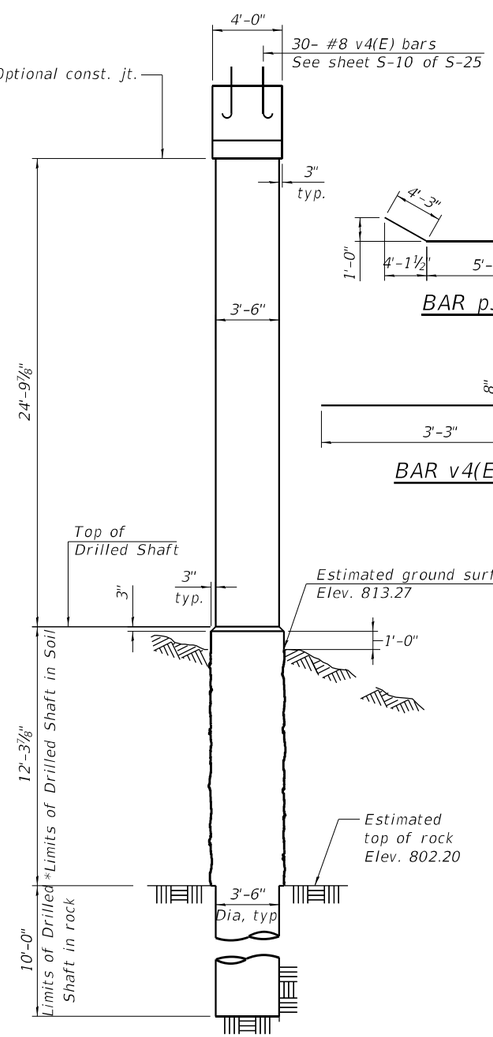

END VIEW

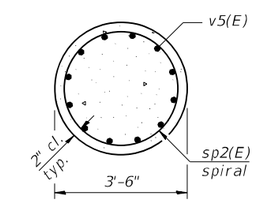

SECTION C-C

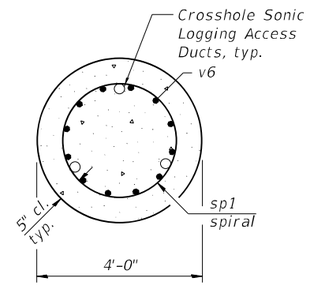

SECTION D-D

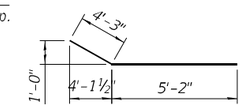

BAR p3(E)

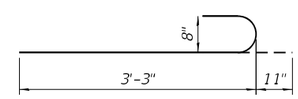

BAR v4(E)

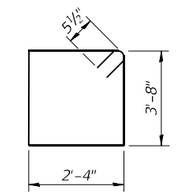

BAR s7(E)

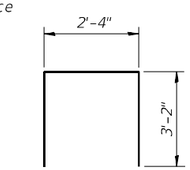

BAR s6(E)

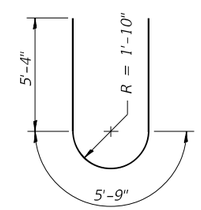

BAR u2(E)

PIER 1 BILL OF MATERIAL

Bar	No.	Size	Length	Shape
h3(E)	6	#7	38'-10"	
p1(E)	7	#9	38'-10"	
p2(E)	7	#9	34'-6"	
p3(E)	14	#9	9'-5"	
s6(E)	80	#5	8'-8"	
s7(E)	132	#5	12'-11"	
** sp1	3	#5	23'-10"	
** sp2(E)	3	#5	26'-6"	
u2(E)	8	#5	16'-5"	
v4(E)	30	#8	4'-2"	
v5(E)	36	#10	34'-7"	
v6	36	#10	30'-0"	
Concrete Structures		Cu. Yd.	51.8	
Reinforcement Bars		Pound	6,230	
Reinforcement Bars, Epoxy Coated		Pound	12,750	
Drilled Shaft in Soil		Cu. Yd.	17.2	
Drilled Shaft in Rock		Cu. Yd.	10.7	
Crosshole Sonic Logging Access Ducts		Foot	67	
Crosshole Sonic Logging Testing		Each	1	

Cast steps monolithically with cap.
Space cap reinforcement to miss anchor bolts.
** Minimum lap for spirals = 3'-0"
Length is height of spiral.

P-DS 2-17-2017

FILE NAME: pw:\\rsnh-pw.bentley.com:rsnh-pw-01\Documents\Transportation\Projects\130059.000 US 20 Section\C4D\Structures\0430063-D764B40-020-Pier1.dgn

RS&H

USER NAME = BlomquiM	DESIGNED - KWY	REVISED -
	DRAWN - KWY	REVISED -
PLOT SCALE =	CHECKED - JLR	REVISED -
PLOT DATE = 10/3/2022	DATE - 2/18/2019	REVISED -

STATE OF ILLINOIS
DEPARTMENT OF TRANSPORTATION

PIER 1 DETAILS
STRUCTURE NO. 043-0063

SHEET NO. S-20 OF S-25 SHEETS

F.A.P. RTE.	SECTION	COUNTY	TOTAL SHEETS	SHEET NO.
301	24R	JO DAVIESS	594	353
		CONTRACT NO. 64B40		
		ILLINOIS FED. AID PROJECT		

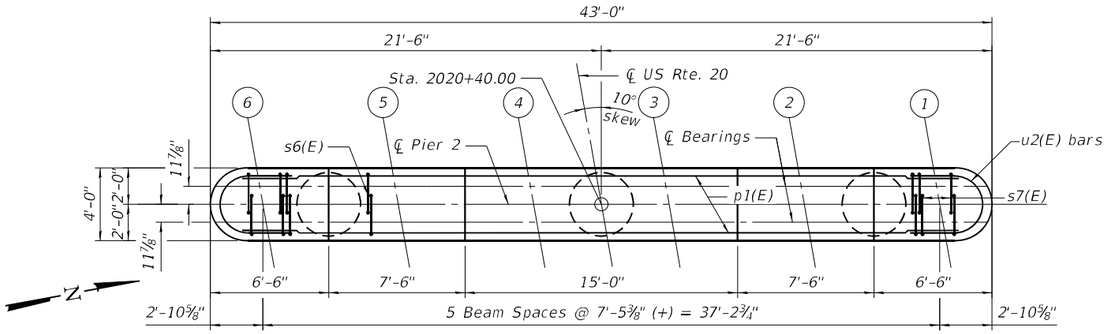

TOP PLAN

BEARING SEAT ELEVATIONS

Beam	Elevation
1	843.24
2	843.39
3	843.50
4	843.49
5	843.37
6	843.22

* If the prevailing water surface elevation during construction is consistently different than estimated on the plans, the contractor may propose an adjustment to the top of the drilled shaft elevation as part of their installation procedure. The top of all drilled shafts within a substructure unit shall be constructed to the same elevation and extend above the prevailing water surface. The quantities and reinforcement detailing are based on the top of shaft and the estimated elevations shown and may change based on the actual elevations encountered at each shaft and the final top of shaft elevation.

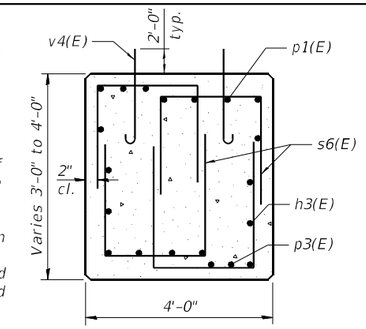

SECTION A-A

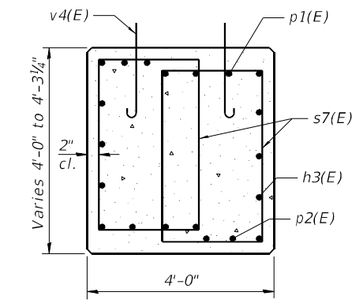

SECTION B-B

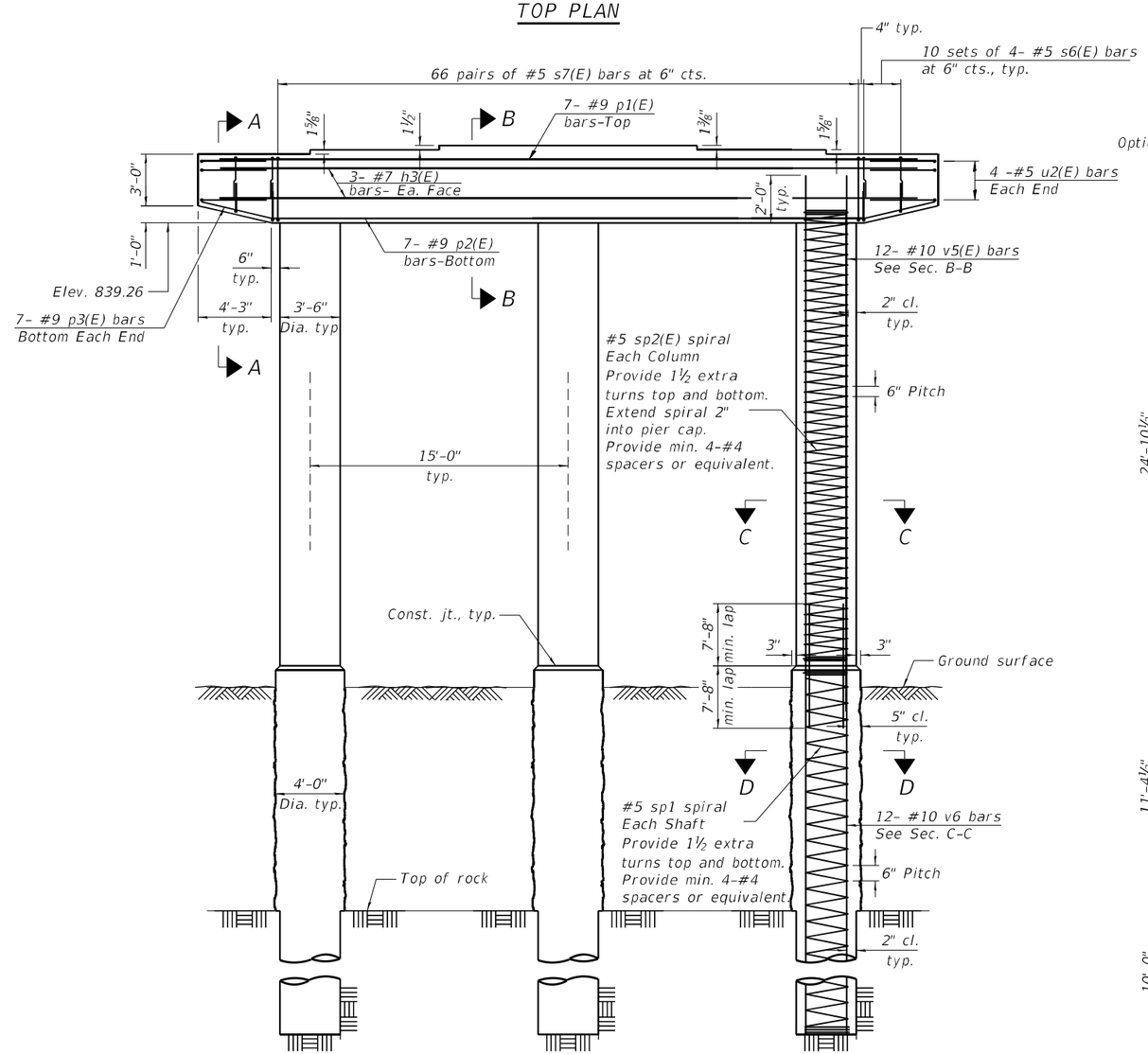

ELEVATION
(Looking West)

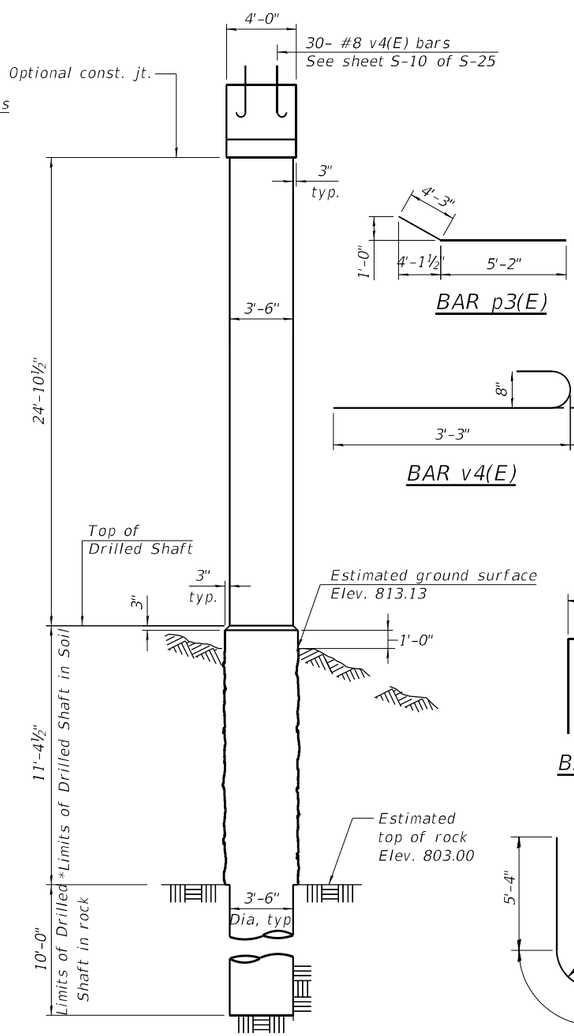

END VIEW

BAR p3(E)

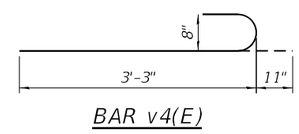

BAR v4(E)

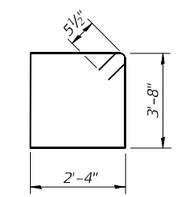

BAR s7(E)

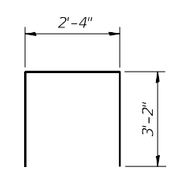

BAR s6(E)

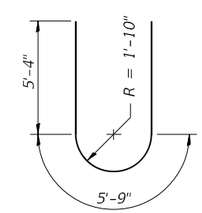

BAR u2(E)

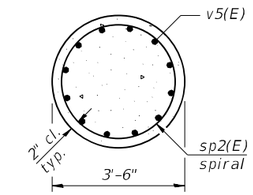

SECTION C-C

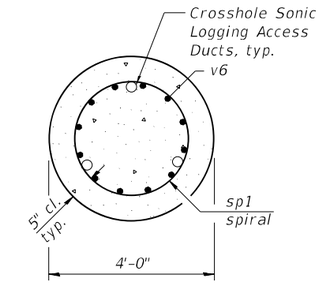

SECTION D-D

PIER 2
BILL OF MATERIAL

	Bar	No.	Size	Length	Shape
	h3(E)	6	#7	38'-10"	
	p1(E)	7	#9	38'-10"	
	p2(E)	7	#9	34'-6"	
	p3(E)	14	#9	9'-5"	
	s6(E)	80	#5	8'-8"	
	s7(E)	132	#5	12'-11"	
**	sp1	3	#5	23'-0"	
**	sp2(E)	3	#5	26'-6"	
	u2(E)	8	#5	16'-5"	
	v4(E)	30	#8	4'-2"	
	v5(E)	36	#10	34'-7"	
	v6	36	#10	29'-1"	
	Concrete Structures			Cu. Yd.	51.9
	Reinforcement Bars			Pound	6,030
	Reinforcement Bars, Epoxy Coated			Pound	12,750
	Drilled Shaft in Soil			Cu. Yd.	15.9
	Drilled Shaft in Rock			Cu. Yd.	10.7
	Crosshole Sonic Logging Access Ducts			Foot	65
	Crosshole Sonic Logging Testing			Each	1

Cast steps monolithically with cap.
Space cap reinforcement to miss anchor bolts.
** Minimum lap for spirals = 3'-0"
Length is height of spiral.

P-DS 2-17-2017

FILE NAME: pw:\\rsandh-ow.bentley.com:rsandh-pw-01\Documents\Transportation\Projects\130059.000 US 20 Stockton\CADStructures\043063-J2R4B40-S21-Pier2.dgn

RS&H	USER NAME = ElamquiM	DESIGNED - KWY	REVISED -
		DRAWN - KWY	REVISED -
	PLOT SCALE =	CHECKED - JLR	REVISED -
	PLOT DATE = 10/3/2022	DATE - 2/18/2019	REVISED -

STATE OF ILLINOIS
DEPARTMENT OF TRANSPORTATION

PIER 2 DETAILS
STRUCTURE NO. 043-0063

SHEET NO. S-21 OF S-25 SHEETS

F.A.P. RTE.	SECTION	COUNTY	TOTAL SHEETS	SHEET NO.
301	24R	JO DAVIESS	594	354
		CONTRACT NO. 64B40		
		ILLINOIS	FED. AID PROJECT	

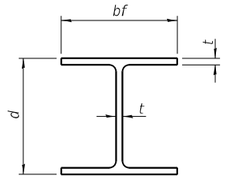

STEEL PILE TABLE

Designation	Depth d	Flange width bf	Web and Flange thickness t	Encasement diameter A
HP 14x117	14¼"	14⅞"	13/16"	30"
x102	14"	14¾"	11/16"	30"
x89	13⅞"	14¾"	⅝"	30"
x73	13⅝"	14⅝"	½"	30"
HP 12x84	12¼"	12¼"	11/16"	24"
x74	12⅛"	12¼"	⅝"	24"
x63	12"	12⅛"	½"	24"
x53	11¾"	12"	7/16"	24"
HP 10x57	10"	10¼"	9/16"	24"
x42	9¾"	10⅛"	7/16"	24"
HP 8x36	8"	8⅛"	7/16"	18"

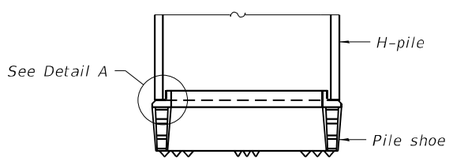

ELEVATION

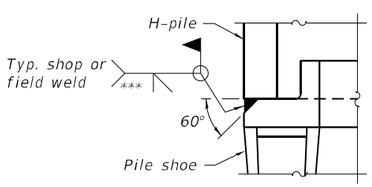

DETAIL A

SHOE ATTACHMENT

Note:
The steel H-piles shall be according to AASHTO M270 Grade 50.

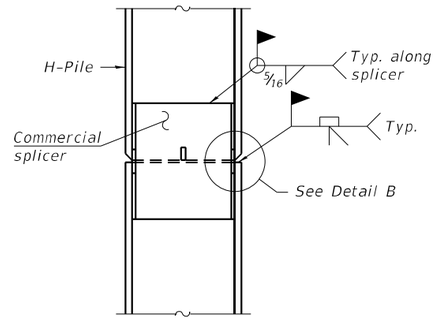

ELEVATION

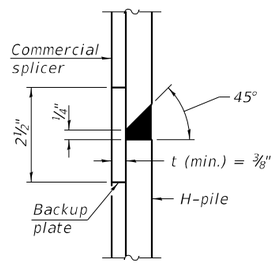

DETAIL "B"

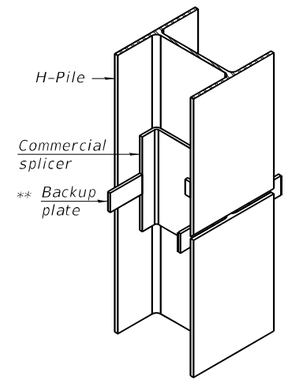

ISOMETRIC VIEW

WELDED COMMERCIAL SPLICE

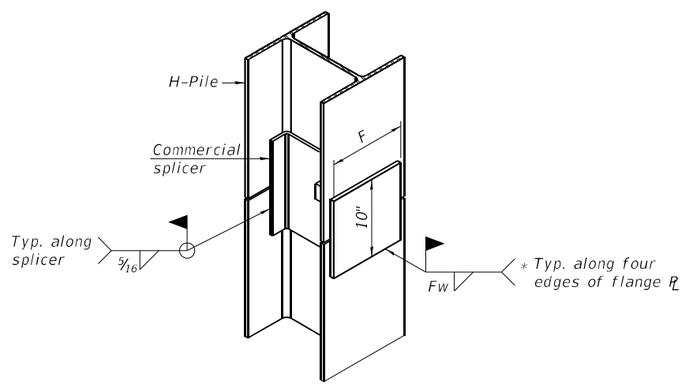

ISOMETRIC VIEW

WELDED COMMERCIAL SPLICE ALTERNATE

* Interrupt welds ¼" from end of web and/or each flange.

** Remove portions of backup plates that extend outside the flanges.

*** Weld size per pile shoe manufacturer (5/16" min.).

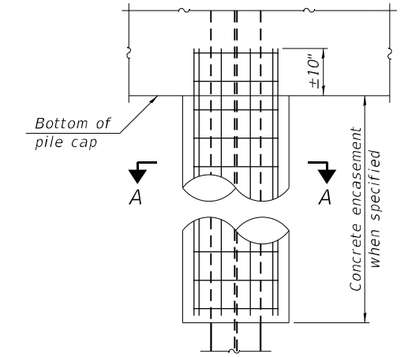

ELEVATION

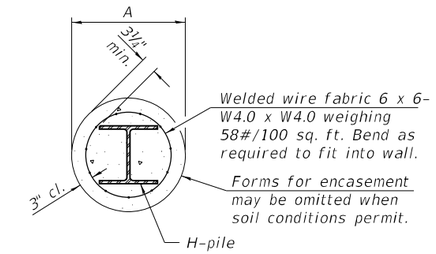

SECTION A-A

INDIVIDUAL PILE CONCRETE ENCASEMENT

(when specified)

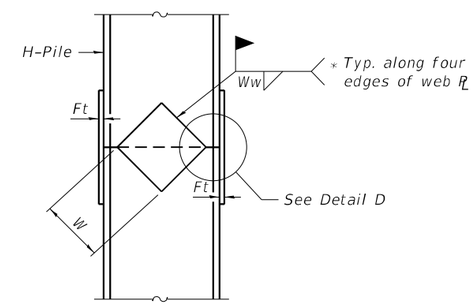

ELEVATION

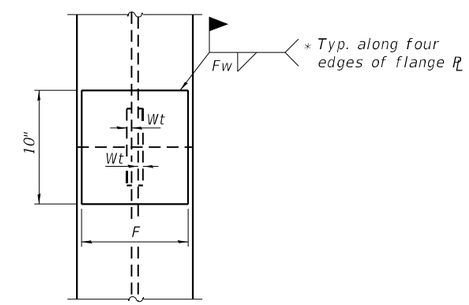

END VIEW

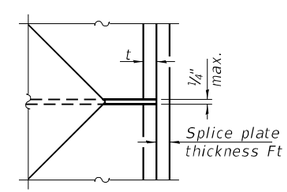

DETAIL D

Designation	F	Ft	Fw	W	Wt	Ww
HP 14x117	12½"	1"	⅞"	7¾"	⅝"	½"
x102	12½"	⅞"	¾"	7¾"	⅝"	½"
x89	12½"	¾"	11/16"	7¾"	⅝"	½"
x73	12½"	⅝"	9/16"	7¾"	⅝"	½"
HP 12x84	10"	⅞"	11/16"	6½"	⅝"	½"
x74	10"	⅞"	11/16"	6½"	⅝"	½"
x63	10"	⅝"	½"	6½"	½"	⅜"
x53	10"	⅝"	½"	6½"	½"	⅜"
HP 10x57	8"	¾"	9/16"	5¼"	½"	⅜"
x42	8"	⅝"	9/16"	5¼"	½"	⅜"
HP 8x36	7"	⅝"	7/16"	4¼"	½"	⅜"

WELDED PLATE FIELD SPLICE

F-HP 1-1-2020

FILE NAME: pw:\\rs-dh-pw.bentley.com:rsandh-pw01\Documents\Transportation\Projects\130059,000 US 20 Stockton\CADStructures\0430063-2\2B4B40-022-HPPileDet.dgn

RS&H

USER NAME = BlomquiM	DESIGNED - JIK	REVISED -
	DRAWN - JIK	REVISED -
PLOT SCALE =	CHECKED - JLR	REVISED -
PLOT DATE = 10/3/2022	DATE - 2/18/2019	REVISED -

STATE OF ILLINOIS
DEPARTMENT OF TRANSPORTATION

HP PILE DETAILS
STRUCTURE NO. 043-0063

SHEET NO. S-22 OF S-25 SHEETS

F.A.P. RTE.	SECTION	COUNTY	TOTAL SHEETS	SHEET NO.
301	24R	JO DAVIESS	594	355
		CONTRACT NO. 64B40		
		ILLINOIS FED. AID PROJECT		

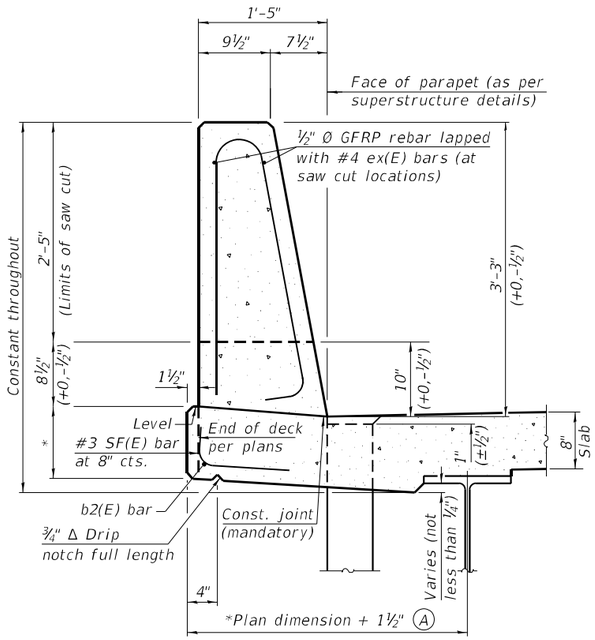

39" CONSTANT-SLOPE PARAPET SECTION

(Showing dimensions, d(E), and ½" ∅ GFRP rebar)

*See Superstructure Details.

Notes:

All dimensions shall remain the same as shown on superstructure details, except dimension A which is to be revised as shown. Additional concrete needed to revise dimension A = 0.00348 cu. yds./ft. for 39" parapet.

Place full depth aluminum sheets as shown on superstructure details.

Replace all cork joint filler locations with a full thickness saw cut.

Steel superstructure shown. Other superstructure types similar.

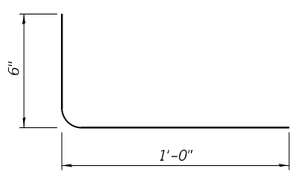

#3 SF(E) BAR

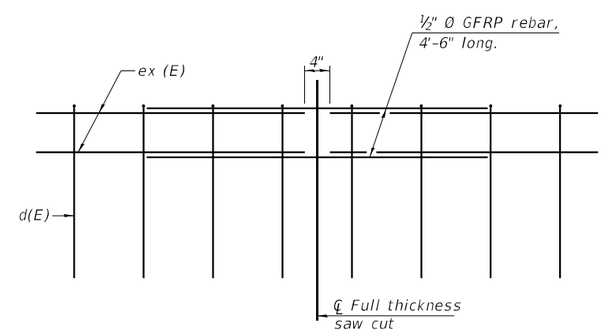

GFRP REBAR STIFFENING DETAIL

(Place as shown in parapet section at each parapet joint location.)

FILE NAME: pw:\\rsh-pw.bentley.com:rsandl-pw01\Documents\Transportation\Projects\130059.000_US 20 Stockton\CAD\Structures\043063-2\64B40-023-ConcParapet.dgn

RS&H	USER NAME = BlomquiM	DESIGNED - KWY	REVISED -
		DRAWN - KWY	REVISED -
	PLOT SCALE =	CHECKED - JLR	REVISED -
	PLOT DATE = 10/3/2022	DATE - 2/18/2019	REVISED -

STATE OF ILLINOIS
DEPARTMENT OF TRANSPORTATION

CONCRETE PARAPET SLIPFORMING OPTION
STRUCTURE NO. 043-0063

SHEET NO. S-23 OF S-25 SHEETS

F.A.P. RTE.	SECTION	COUNTY	TOTAL SHEETS	SHEET NO.
301	24R	JO DAVIESS	594	356
		CONTRACT NO. 64B40		
		ILLINOIS	FED. AID PROJECT	

Illinois Department of Transportation
Division of Highways
IDOT

SOIL BORING LOG

Page 1 of 1

Date 5/21/93

ROUTE FA 301 DESCRIPTION P-92-103-05 US 20 over Rush Creek west of Stockton LOGGED BY C. Jenkins

SECTION 24RS-4 & 5 LOCATION Stockton Twp. - S 1/2 Sec 5 & N 1/2 Sec 8, SEC. , TWP. 27N, RNG. 4E

COUNTY Jo Daviess DRILLING METHOD HAMMER TYPE

STRUCT. NO.
Station 477+28

Latitude
Longitude

Northing
Easting

BORING NO. B-1
Station 477+18
Offset 63.00ft Lt CL
Ground Surface Elev. 808.70 ft

Surface Water Elev. 805.30 ft
Stream Bed Elev. Wash ft

Groundwater Elev.:
First Encounter 801.7 ft ▼
Upon Completion ft
After ___ Hrs. ft

Description	Elev.	DEPTH (ft)	BLOWS (/6")	UCS Qu (tsf)	MOIST (%)
MEDIUM brown SILTY LOAM with large COBBLES				0.6 P	12.0
	806.70				
VERY STIFF tan/black SILTY CLAY with some GRAVEL			10 10 15	2.9 B	14.0
	805.20				
MEDIUM yellow weathered LIMESTONE		-5	13 13 13		
	802.70				
VERY DENSE yellow weathered LIMESTONE			100/5" PEN		
	800.20				
Same as above	798.70	-10	100/3" PEN		
Borehole continued with rock coring.					
		-15			
		-20			

The Unconfined Compressive Strength (UCS) Failure Mode is indicated by (B-Bulge, S-Shear, P-Penetrometer)
The SPT (N value) is the sum of the last two blow values in each sampling zone (AASHTO T206)

BBS, from 137 (Rev. 8-99)

Illinois Department of Transportation
Division of Highways
IDOT

SOIL BORING LOG

Page 1 of 1

Date 5/24/93

ROUTE FA 301 DESCRIPTION P-92-103-05 US 20 over Rush Creek west of Stockton LOGGED BY C. Jenkins

SECTION 24RS-4 & 5 LOCATION Stockton Twp. - S 1/2 Sec 5 & N 1/2 Sec 8, SEC. , TWP. 27N, RNG. 4E

COUNTY Jo Daviess DRILLING METHOD HAMMER TYPE

STRUCT. NO.
Station 477+28

Latitude
Longitude

Northing
Easting

BORING NO. B-2
Station 476+03
Offset 8.00ft Rt CL
Ground Surface Elev. 835.30 ft

Surface Water Elev. 805.30 ft
Stream Bed Elev. Wash ft

Groundwater Elev.:
First Encounter 807.8 ft ▼
Upon Completion ft
After ___ Hrs. ft

Description	Elev.	DEPTH (ft)	BLOWS (/6")	UCS Qu (tsf)	MOIST (%)
Asphalt, concrete					
STIFF tan/brown SILTY CLAY with some GRAVEL				1.5 P	24.0
	832.30				
MEDIUM tan SILTY CLAY with GRAVEL			100/5" PEN		
	830.80				
		-5			
MEDIUM tan fine SAND with SILT & GRAVEL lenses			5 8 7		
	828.30				
MEDIUM tan SILTY CLAY with LIMESTONE fragments			10 8 14	0.8 P	15.0
	825.80				
		-10			
MEDIUM tan fine SAND with LIMESTONE & CONCRETE fragments			4 8 8		
	823.30				
MEDIUM tan fine SAND with LIMESTONE fragments			9 7 9		
	820.80				
		-15			
MEDIUM tan weathered LIMESTONE fill			7 15 15		
	818.30				
MEDIUM tan weathered LIMESTONE with a SILTY CLAY lens			6 6 11		
	815.80				
		-20			
VERY DENSE gray/tan weathered LIMESTONE			14 32 48		
	813.30				
MEDIUM yellow LIMESTONE			12 13 14		
	810.80				
		-25			
Same as above			24 13 7		
	807.80 ▼				
VERY DENSE tan weathered LIMESTONE with a CLAY lens			5 50 30		
	805.80				
		-30			
Tri-coned to 33' because augers had kicked off too bad to drill any further.	803.30				
VERY DENSE tan LIMESTONE	801.80		100/4"		
Borehole continued with rock coring.					
		-35			
		-40			

The Unconfined Compressive Strength (UCS) Failure Mode is indicated by (B-Bulge, S-Shear, P-Penetrometer)
The SPT (N value) is the sum of the last two blow values in each sampling zone (AASHTO T206)

BBS, from 137 (Rev. 8-99)

FILE NAME: pw:\\rsandh-pw.bentley.com:rsandh-pw01\Documents\Transportation\Projects\1130059.000 US 20 Stockton\CAD\Structures\0430063-J376B40-074-Boring01.dgn

RS&H

USER NAME = BlomquiM	DESIGNED - JIK	REVISED -
	DRAWN - JIK	REVISED -
PLOT SCALE =	CHECKED - JLR	REVISED -
PLOT DATE = 10/4/2022	DATE - 2/18/2019	REVISED -

STATE OF ILLINOIS
DEPARTMENT OF TRANSPORTATION

SOIL BORING LOGS (1 OF 2)
STRUCTURE NO. 043-0063

SHEET NO. S-24 OF S-25 SHEETS

F.A.P. RTE.	SECTION	COUNTY	TOTAL SHEETS	SHEET NO.
301	24R	JO DAVIESS	594	357
		CONTRACT NO. 64B40		
		ILLINOIS	FED. AID PROJECT	

Illinois Department of Transportation
Division of Highways
IDOT

SOIL BORING LOG

Page 1 of 1

Date 5/25/93

ROUTE FA 301 DESCRIPTION P-92-103-05 US 20 over Rush Creek west of Stockton LOGGED BY C. Jenkins

SECTION 24RS-4 & 5 LOCATION Stockton Twp. - S 1/2 Sec 5 & N 1/2 Sec 8, SEC. , TWP. 27N, RNG. 4E

COUNTY Jo Daviess DRILLING METHOD HAMMER TYPE

STRUCT. NO.
Station 477+28
Latitude
Longitude
Northing
Easting

BORING NO. B-3
Station 478+53
Offset 8.00ft Rt CL
Ground Surface Elev. 832.40 ft

Surface Water Elev. 805.30 ft
Stream Bed Elev. Wash ft
Groundwater Elev.:
First Encounter 804.4 ft ▼
Upon Completion ft
After ___ Hrs. ft

Description	Elev.	DEPTH (ft)	BLOWS (/6")	UCS Qu (tsf)	MOIST (%)
Asphalt, Concrete					
DENSE tan/red ROAD ROCK	829.40				
STIFF tan SILTY LOAM with GRAVEL	827.90		10 8 9	1.2 P	20.0
		-5			
MEDIUM tan weathered LIMESTONE with a SILTY LOAM lens	825.40		8 7 14		
VERY DENSE, presume old CONCRETE highway or fill	822.90		100/2" PEN		
		-10			
VERY DENSE gray weathered LIMESTONE fragments	820.40		100/8" PEN		
MEDIUM gray/tan CLAY with LIMESTONE fragments	817.90		9 15 7	0.9 P	22.0
		-15			
VERY STIFF tan/gray SILTY CLAY	815.40		2 3 6	2.3 B	22.0
MEDIUM gray SILTY CLAY with LIMESTONE fragments	812.90		5 6 7	0.5 S	27.0
		-20			
STIFF gray/tan SILTY CLAY	810.40		6 7 7	1.2 B	22.0
STIFF black SILTY LOAM	807.90		3 4 7	1.3 B	30.0
		-25			
STIFF gray/black SILTY CLAY	804.90		4 7 7	1.8 B	26.0
MEDIUM yellow weathered LIMESTONE	802.90		8 12 12		
		-30			
VERY DENSE tan weathered LIMESTONE	800.40		100/7" PEN		
Same as above	798.90		100/4" PEN		
Borehole continued with rock coring.					
		-35			
		-40			

The Unconfined Compressive Strength (UCS) Failure Mode is indicated by (B-Bulge, S-Shear, P-Penetrometer)
The SPT (N value) is the sum of the last two blow values in each sampling zone (AASHTO T206)

BBS, from 137 (Rev. 8-99)

Illinois Department of Transportation
Division of Highways
IDOT

SOIL BORING LOG

Page 1 of 1

Date 5/26/93

ROUTE FA 301 DESCRIPTION P-92-103-05 US 20 over Rush Creek west of Stockton LOGGED BY C. Jenkins

SECTION 24RS-4 & 5 LOCATION Stockton Twp. - S 1/2 Sec 5 & N 1/2 Sec 8, SEC. , TWP. 27N, RNG. 4E

COUNTY Jo Daviess DRILLING METHOD HAMMER TYPE

STRUCT. NO.
Station 477+28
Latitude
Longitude
Northing
Easting

BORING NO. B-4
Station 477+62
Offset 61.50ft Lt CL
Ground Surface Elev. 808.50 ft

Surface Water Elev. 805.30 ft
Stream Bed Elev. Wash ft
Groundwater Elev.:
First Encounter 804.0 ft ▼
Upon Completion ft
After ___ Hrs. ft

Description	Elev.	DEPTH (ft)	BLOWS (/6")	UCS Qu (tsf)	MOIST (%)
STIFF brown SILTY CLAY	806.00			1.4 P	24.0
STIFF black SILTY LOAM with LIMESTONE fragments	804.50		8 6 10	1.3 S	28.0
		-5			
VERY DENSE gray weathered LIMESTONE	802.00		9 6 100/6"		
Same as above	800.50		100/3"		
Borehole continued with rock coring.					
		-10			
		-15			
		-20			

The Unconfined Compressive Strength (UCS) Failure Mode is indicated by (B-Bulge, S-Shear, P-Penetrometer)
The SPT (N value) is the sum of the last two blow values in each sampling zone (AASHTO T206)

BBS, from 137 (Rev. 8-99)

FILE NAME: pw:\\rsandh-pw.bentley.com:rsandh-pw-01\Documents\Transportation\Projects\130059.000 US 20 Stockton\CAD\Structures\0430063-J926480-073-Boring1.dgn

RS&H	USER NAME = BlomquiM	DESIGNED - JIK	REVISED -
		DRAWN - JIK	REVISED -
	PLOT SCALE =	CHECKED - JLR	REVISED -
	PLOT DATE = 10/4/2022	DATE - 2/18/2019	REVISED -

STATE OF ILLINOIS
DEPARTMENT OF TRANSPORTATION

SOIL BORING LOGS (2 OF 2)
STRUCTURE NO. 043-0063

SHEET NO. S-25 OF S-25 SHEETS

F.A.P. RTE.	SECTION	COUNTY	TOTAL SHEETS	SHEET NO.
301	24R	JO DAVIESS	594	358
		CONTRACT NO. 64B40		
		ILLINOIS FED. AID PROJECT		

B.M. - S.W. Root of 12" OAK Left of Sta. 478+50 Elev. 811.08.

Existing Bridge built in 1923, Single R.C. Slab span, 32'-2" o.-o.; 28'-2½" Bk. to Bk. closed Abut. to be removed by Contractor.

STATE OF ILLINOIS
DEPARTMENT OF PUBLIC WORKS & BUILDINGS
DIVISION OF HIGHWAYS

ROUTE NO.	SECTION	COUNTY	TOTAL SHEETS	SHEET NO.
S.B.I. 5 Rush	24B-1	JO DAVIESS	52	6
FED. ROAD DIST. NO. 7	ILLINOIS	FED. AID PROJECT		

SHEET NO. 1
7 SHEETS

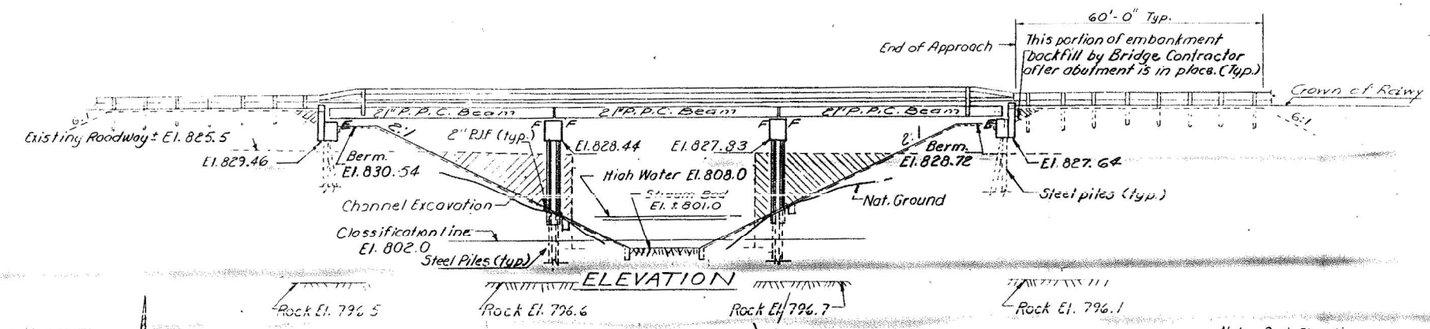

ELEVATION

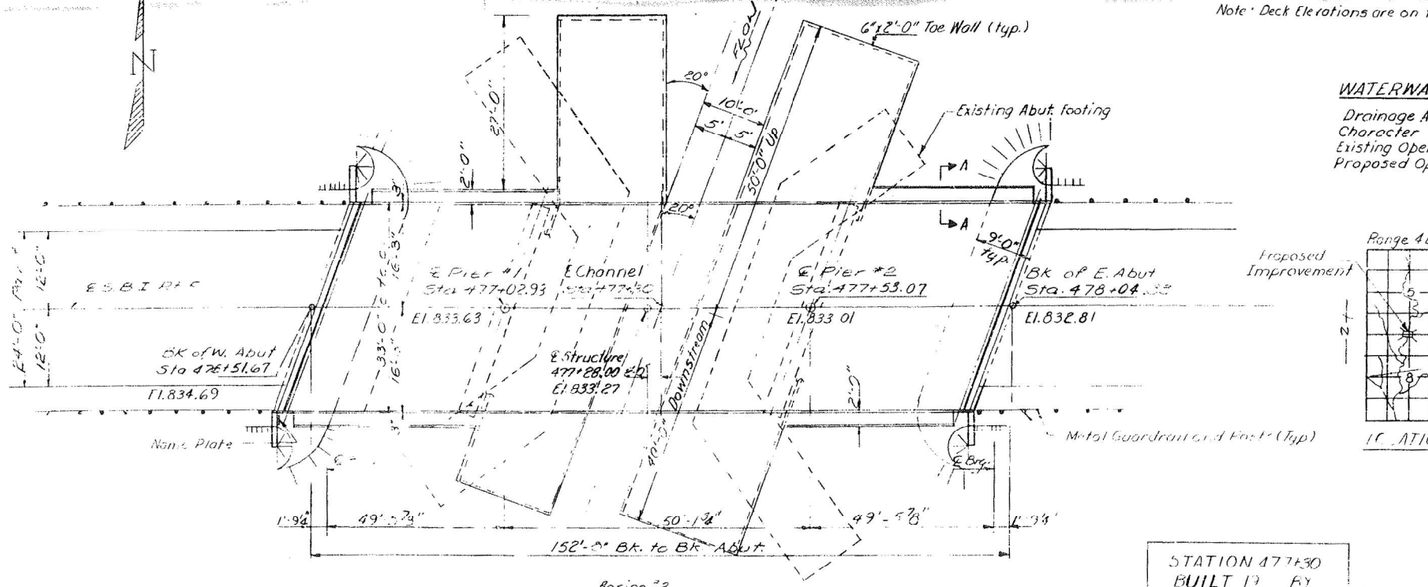

PLAN

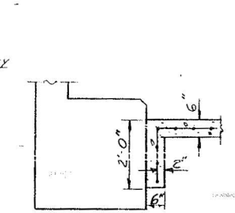

DETAIL AT ABUT

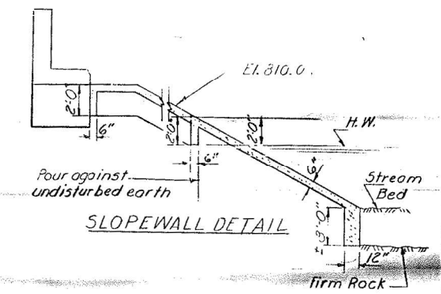

SLOPEWALL DETAIL

Note: Deck Elevations are on top of Class I Surface.

WATERWAY INFORMATION

Drainage Area	4.1 sq. miles
Character	Rolling
Existing Opening	168 sq. ft
Proposed Opening	168 sq. ft

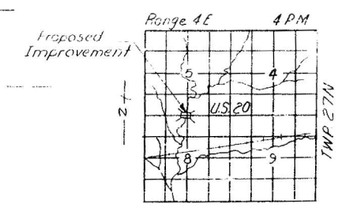

LOCATION SKETCH

GENERAL NOTES

The item, "Removal of Existing Structures" includes the removal of portions of existing footing which interferes with the driving of the Pier Bent Piles.

Class A & B Excavation for Structures includes excavation for slope wall.

All reinforcement bars shall be lapped 24 dia. unless otherwise shown.

Slope wall shall be reinforced with welded wire fabric 6" x 6" mesh, weighing 56# per 100 sq. ft.

Layout of slope walls may be varied in the field to suit ground conditions as directed by the Engineer.

The contractor shall drive one Steel test pile in a permanent location at the Pier 1 Bent as directed by the Engineer before ordering the remainder of piles.

The embankment configuration shown shall be the minimum embankment that must be constructed prior to construction of the abutments.

An alternate strand pattern using Extra High Strength Pressing strand (270 KSI) is permitted.

TOTAL FIELD OF MATERIAL

ITEM	UNIT	SUPER	SUB	TOTAL
Bituminous Concrete Surface Course, Class I	Tons	62		62
Removal of Existing Structures	Each			1
Class X Concrete	Cu. Yds		45.2	45.2
Precast Prestressed Concrete Deck Beams (21" Depth)	Sq. Ft	4956		4956
Steel Railing, Type N	Lin. Ft.	306		306
Reinforcement Bars	Lbs		4610	4610
Steel Piles 10 BP 42	Lin. Ft		724	724
Test Piles (Steel 10 BP 42)	Each			1
Name Plates	Each			1
Slope Wall, 6 inch	Sq. Yd.		1020	1020
Coal Tar Interlayer Protective Coat	Sq. Yd	558		558
Class A Excavation for Structures	Cu Yds			20
Class B Excavation for Structures	Cu Yds.			40
Channel Excavation	Cu. Yds.			1740
Class X Concrete Encasement	Cu Yds.		25.5	25.5
Temporary Bridge Complete	Each			1

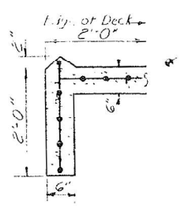

SEC. A-A

STATION 477+30
BUILT IN BY
STATE OF ILLINOIS
SBI RT 5 SEC 24B-1
LOADING H520

NAME PLATE
See Std. 2113-1

DESIGN STRESSES

FIELD UNITS
fc = 1400 psi Sub.
Vc = 75 psi Footing
fs = 20,000 psi Reinf.
n = 10

PRESTR. PRECAST UNITS
fc = 5,000 psi
fci = 4,000 psi
f'c = 248,000 psi (Strands 7/16")
fsi = 173,000 psi (Strands 7/16")

Loading HS 20-44

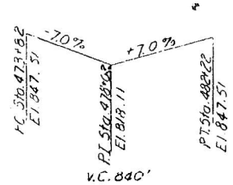

VERTICAL CURVE DATA

DESIGNED	Dennis E. Chynoweth
CHECKED	
DRAWN	V.H.
CHECKED	

October 14, 1969
EXAMINED
PASSED — Engineer of Bridge and Traffic Structures
APPROVED — Director of Design
Chief Highway Engineer

GENERAL PLAN & ELEVATION

U.S. 20 (S.B.I. 5) OVER RUSH CREEK
S.B.I. RT. 5 (U.S. RT. 20) - SEC. 24 B-1
JO DAVIESS COUNTY
STA. 477+30.00

USER NAME = $USER$	DESIGNED -	REVISED -	
	DRAWN -	REVISED -	
PLOT SCALE = $SCALE$	CHECKED -	REVISED -	
PLOT DATE = $DATE$	DATE -	REVISED -	

STATE OF ILLINOIS
DEPARTMENT OF TRANSPORTATION

EXISTING STRUCTURE PLANS

SCALE: N.T.S. | SHEET OF SHEETS | STA. TO STA.

F.A.P. RTE.	SECTION	COUNTY	TOTAL SHEETS	SHEET NO.
301	24R	JO DAVIESS	594	359

CONTRACT NO. 64B40
ILLINOIS | FED. AID PROJECT

MODEL: $MODELNAME$
FILE NAME: $FILE$

FOR INFORMATION ONLY

STATE OF ILLINOIS
DEPARTMENT OF PUBLIC WORKS & BUILDINGS
DIVISION OF HIGHWAYS

ROUTE NO.	SECTION	COUNTY	TOTAL SHEETS	SHEET NO.
U.S. 5	24B-1	JO DAVIESS	32	7
FED. ROAD DIST. NO. 7		ILLINOIS	FED. AID PROJECT	

SHEET NO. 2
7 SHEETS

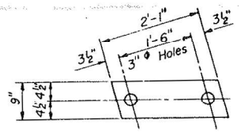

FABRIC BEARING PAD
AT PIERS

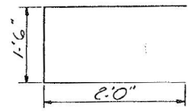

U_1 BAR

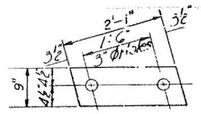

GRAPHITED ASBESTOS
BEARING PAD
AT ABUTS.

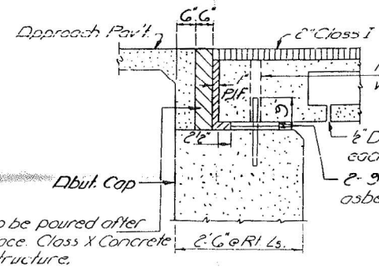

SEC. THRU. ABUT.

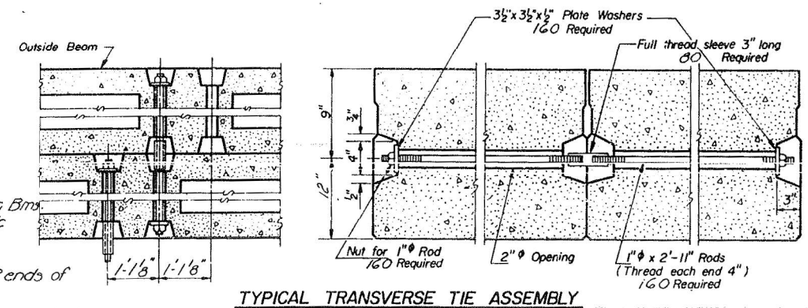

TYPICAL TRANSVERSE TIE ASSEMBLY

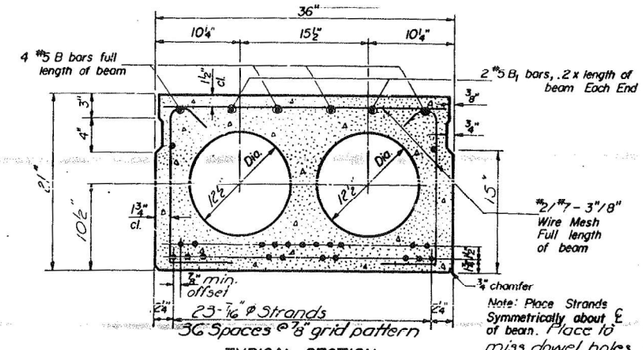

TYPICAL SECTION

23 7/16" ϕ Strands Each Strand Stressed to 18,900 lbs.
10 Strands 1¾" up 11 Strands 3¼" up 2 Strands 15" up

Note: For rail post anchor device See Sheet #3.

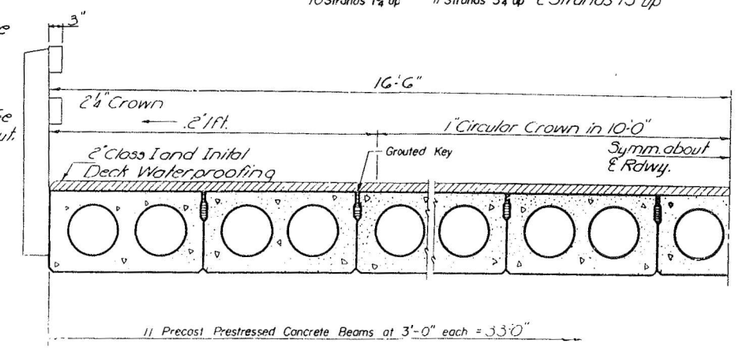

HALF CROSS SECTION

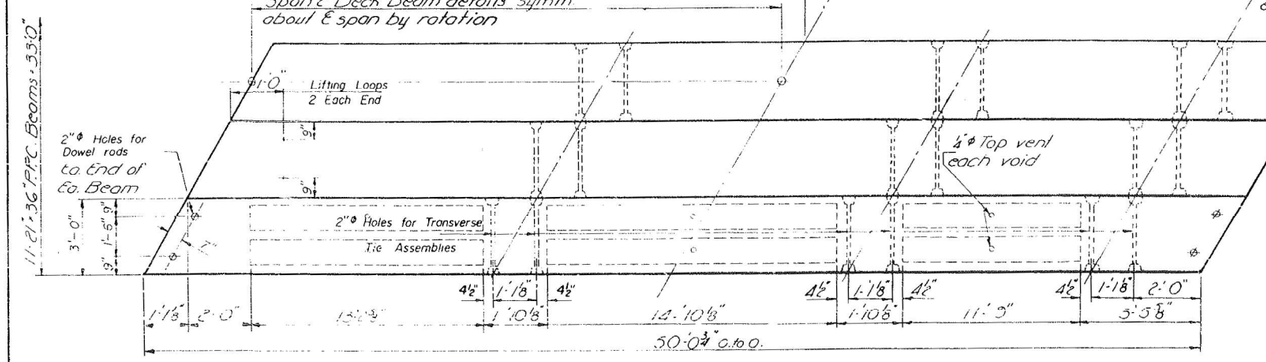

PARTIAL PLAN

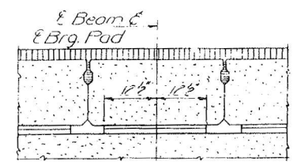

SEC. A-A

Note: All three spans have transverse tie assemblies located at the third points of each span. Spans 1 & 3 (End Spans) have in addition transverse tie assemblies at Abutments as shown in Partial Plan.

* BILL OF MATERIAL

Bar	No.	Size	Length	Shape
B	4	#5	49'-9"	—
B_1	4	#5	10'-0"	—
U_1	12	#4	3'-6"	⊏
Precast Prestressed Concrete Deck Beams			Sq. Ft.	4956

* Reinforcement shown for one Beam only

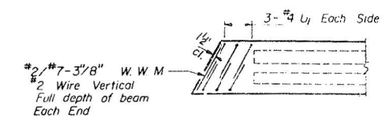

END PLAN

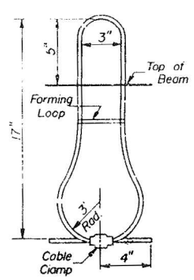

LIFTING LOOP DETAIL
(4-Required ea. Bm.)

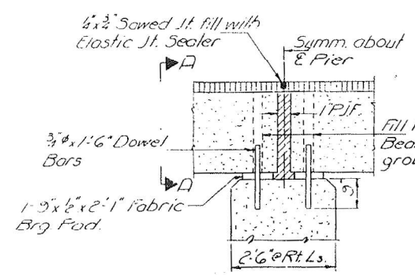

SEC. THRU PIER BENT

GENERAL NOTES

Prestressing steel shall be non-galvanized high strength, stress-relieved 7-wire strand.
The nominal diameter shall be 7/16" and the nominal cross-sectional area shall be 0.109 sq. in.
Lifting loops shall be ⅜" diameter, 6x19 class wire rope with fiber core and shall have a minimum ultimate tensile strength of 23,000 lbs.
The 1" ϕ rods in the transverse tie assembly shall be tightened to a snug fit and the threads set. Pockets that receive transverse tie bar on outside beam shall be filled with grout after transverse tie assembly is in place.
Longitudinal shear keys shall be packed with a very dry mix of 2:1 sand and P.C. mortar
After beams have been erected, holes for the dowel anchors shall be drilled into the sub-structure and the anchor dowels shall be grouted in place.
Steel for dowel rods, transverse tie rods, shall be S.A.E. 1020, structural steel A.S.T.M. Designation A36, or intermediate grade A.S.T.M. Designation A15
After fabrication the transverse tie assemblies (tie rods, nuts, washers and sleeves) shall be hot-dipped galvanized in accordance with A.S.T.M. Designation A153.
Cost of reinforcement and accessories cast into the beam, of bearing pads, and of grouting longitudinal shear keys is included in unit price bid for "Precast Prestressed Concrete Deck Beams."
Eliminate notches on exterior face of exterior Beams.

DESIGNED	James E. Oggert
CHECKED	L. E. Indrum
DRAWN	J.D. James E. Oggert
CHECKED	B.A.

PD-1-L 11-19-65

OCT. 14 1969
EXAMINED — ENGINEER OF BRIDGE AND TRAFFIC STRUCTURES
PASSED H. E. Baumann — ENGINEER OF DESIGN
APPROVED Richard H. Gottschalk — CHIEF HIGHWAY ENGINEER

SUPERSTRUCTURE
S.B.I. RT. 5 SEC. 24B-1
JO DAVIESS COUNTY
STA. 477+30.00

USER NAME = $USER$	DESIGNED -	REVISED -	
	DRAWN -	REVISED -	
PLOT SCALE = $SCALE$	CHECKED -	REVISED -	
PLOT DATE = $DATE$	DATE -	REVISED -	

STATE OF ILLINOIS
DEPARTMENT OF TRANSPORTATION

EXISTING STRUCTURE PLANS

SCALE: N.T.S. SHEET OF SHEETS STA. TO STA.

F.A.P. RTE.	SECTION	COUNTY	TOTAL SHEETS	SHEET NO.
301	24R	JO DAVIESS	594	360
		CONTRACT NO. 64B40		
		ILLINOIS	FED. AID PROJECT	

MODEL: $MODEL$NAME
FILE NAME: $FILE$

FOR INFORMATION ONLY

STATE OF ILLINOIS
DEPARTMENT OF PUBLIC WORKS & BUILDINGS
DIVISION OF HIGHWAYS

ROUTE NO.	SECTION	COUNTY	TOTAL SHEETS	SHEET NO.
F.A.S. 5	24B-1	JO DAVIESS	32	8
FED. ROAD DIST. NO. 7	ILLINOIS	FED. AID PROJECT		

SHEET NO. 3
7 SHEETS

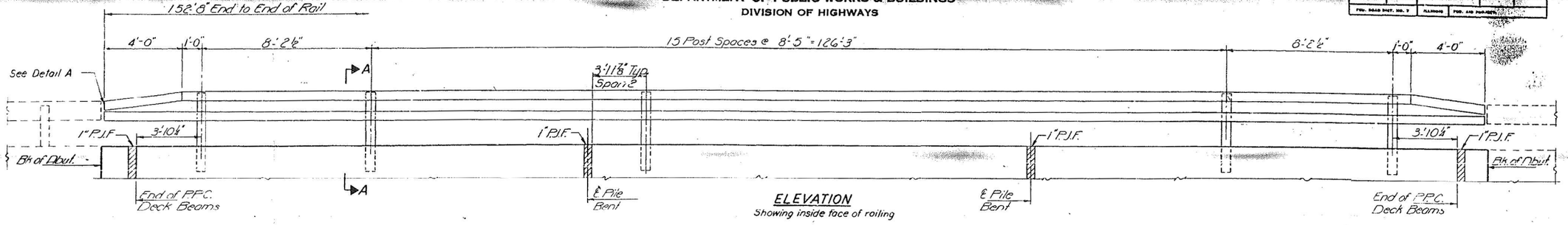

ELEVATION
Showing inside face of railing

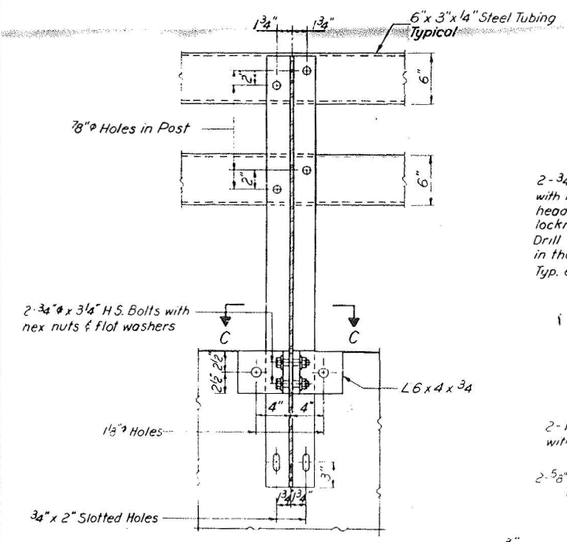

SECTION B-B

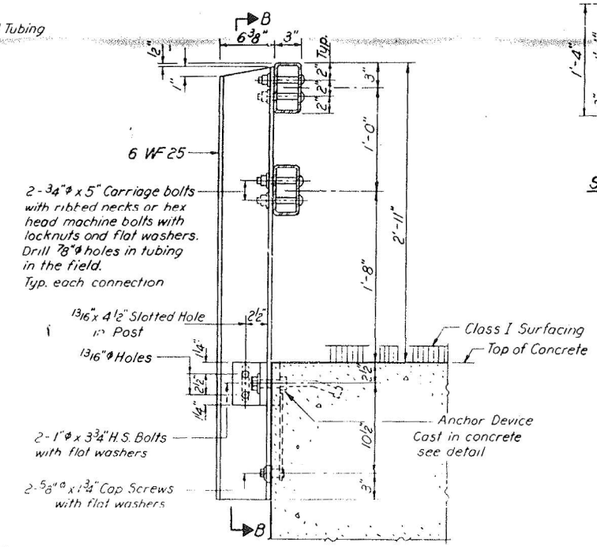

SECTION A-A

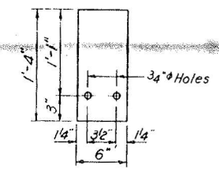

SHIM DETAIL

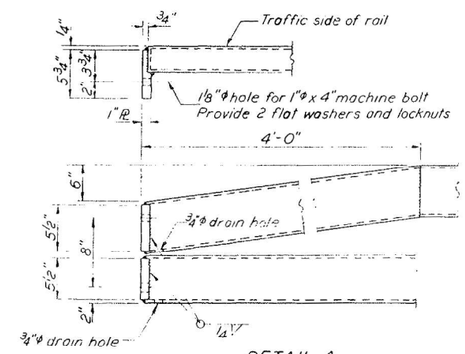

DETAIL A

NOTES

Hollow structural steel tubing shall conform to the requirements of ASTM designation A-501 "Hot Formed Welded and Seamless Carbon Steel Structural Tubing."

All other steel shapes and plates shall conform to the requirements of ASTM designation A-36 except posts shall conform to ASTM A-441.

Bolts, cap screws, and nuts shall conform to the requirement of ASTM designation A-307 except for high strength bolts, nuts and washers noted which shall conform to ASTM designation A-325.

All bolts, nuts, cap screws, washers and lock washers shall be galvanized in accordance with ASTM designation A-153.

All posts, railing, rail splices, anchor devices and angles shall be galvanized after shop fabrication in accordance with ASTM designation A-123 and A-385. Galvanized rail shall not be painted.

Railing shall be in accordance with Section 508 of the Standard Specifications, except as noted, and shall be paid for at the contract unit price per lineal foot for STEEL RAILING, TYPE N

All field drilled holes shall be coated with an approved zinc rich paint before erection.

The lower portion of the post flange in contact with concrete shall receive two coats of asphalt paint conforming to Section 714.08 Type B or place ⅛" fabric bearing pad between the post and concrete.

The ¾" φ high strength bolts used to connect the 6 x 4 x ¾ angles to the post shall be tightened in accordance with Article 710.11 of the Standard Specifications. The 1" φ high strength bolts connecting the angles to the concrete beam shall be tightened to a snug fit and given an additional ⅛ turn.

For multi-span bridges, sufficient ¼" x 6" x 1'-4" galvanized steel shims shall be provided to align rail between adjacent spans. Cost incidental to Steel Railing.

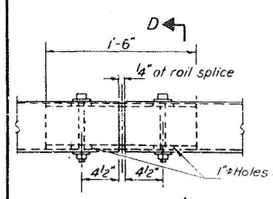

RAIL SPLICE

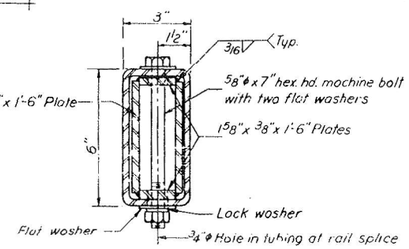

SECTION D-D

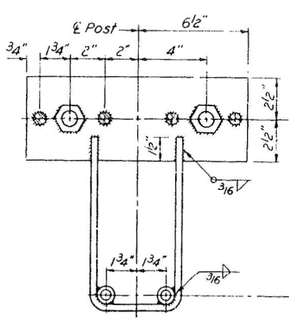

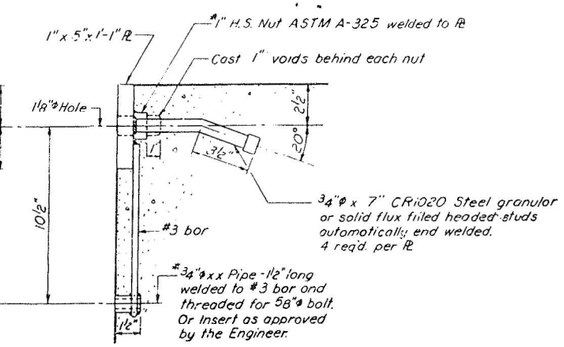

ANCHOR DEVICE

* Threaded areas shall be plugged or blocked off during casting of beam.

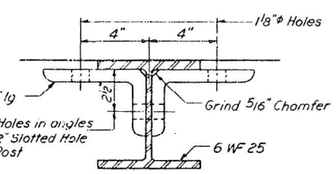

SECTION C-C

BILL OF MATERIAL

Item	Unit	Quantity
STEEL RAILING, TYPE N	Lin. Ft.	306

TYPE N
STEEL RAILING
S.B.I. RT. 5 SEC. 24B-1
JO DAVIESS COUNTY
STA. 477+30.00

DESIGNED	Lance E. Coquet	
CHECKED		
J.D. DRAWN	J.L. Armstrong	
CHECKED		

Oct. 14 1969
EXAMINED — ENGINEER OF BRIDGES AND TRAFFIC STRUCTURES
PASSED — ENGINEER OF DESIGN
APPROVED — CHIEF HIGHWAY ENGINEER

USER NAME = $USER$	DESIGNED -	REVISED -
	DRAWN -	REVISED -
PLOT SCALE = $SCALE$	CHECKED -	REVISED -
PLOT DATE = $DATE$	DATE -	REVISED -

STATE OF ILLINOIS
DEPARTMENT OF TRANSPORTATION

EXISTING STRUCTURE PLANS

SCALE: N.T.S. | SHEET OF SHEETS | STA. TO STA.

F.A.P. RTE.	SECTION	COUNTY	TOTAL SHEETS	SHEET NO.
301	24R	JO DAVIESS	594	361
		CONTRACT NO. 64B40		
		ILLINOIS FED. AID PROJECT		

MODEL: $MODELNAME$
FILE NAME: $FILE$

FOR INFORMATION ONLY

STATE OF ILLINOIS
DEPARTMENT OF PUBLIC WORKS & BUILDINGS
DIVISION OF HIGHWAYS

S.B.I. 5	24B-1	JO DAVIESS	32	9	SHEET NO. 4 / 7 SHEETS

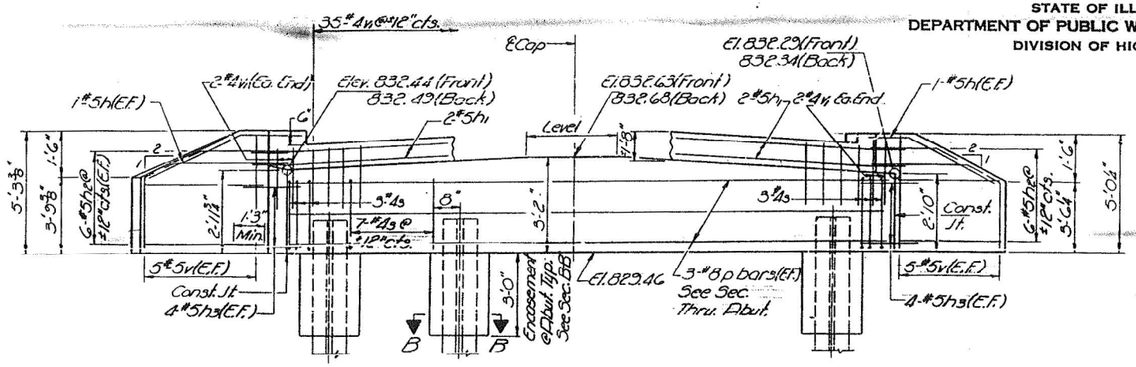

ELEVATION
LOOKING WEST

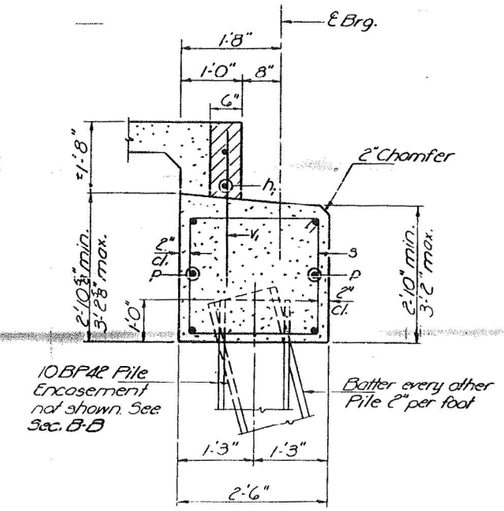

SEC. THRU. ABUT.

Notes: Bend bars h_1, h_2 & v in field to fit if necessary.
Backwall and wingwalls shall be formed and poured after beams have been erected.
Back wall Class X Concrete billed Substructure.

PILE DATA
Type: Steel 10 BP 42
Capacity: Drive to refusal
Length: 35'-0"
No. Req'd: 5

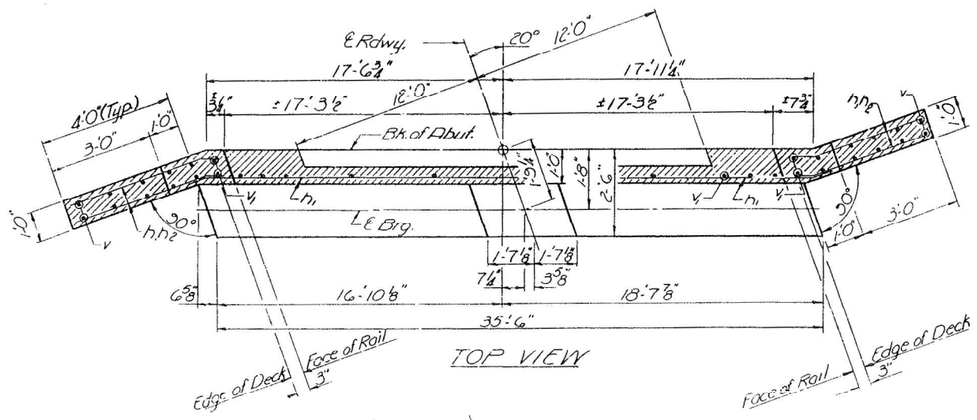

TOP VIEW

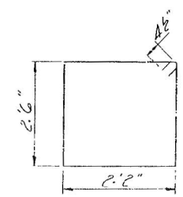

BAR s

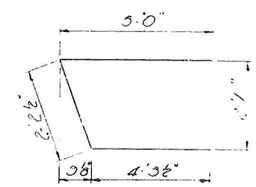

BAR u

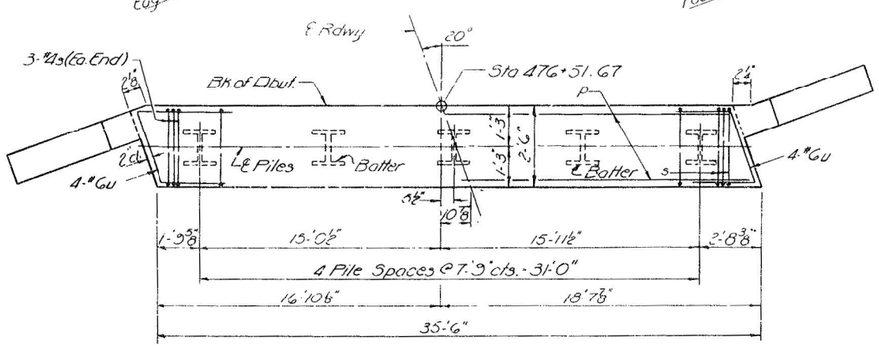

PLAN ABUT. CAP

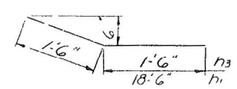

BAR h_3 & h_1

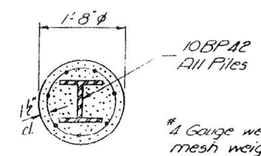

SEC. B-B

*4 Gauge welded wire fabric 6" x 6" mesh weighing 58 Lbs. per 100 Sq. ft. Cost of Class X Concrete encasement & reinforcement shall be included in cost of furnishing the piles. Forms for encasement may be omitted when soil conditions will permit.

BILL OF MATERIAL

Bar	No.	Size	Length	Shape
h	4	#5	4'-0"	
h_1	4	#5	20'-0"	
h_2	24	#5	3'-9"	
h_3	16	#5	3'-0"	
p	6	#8	35'-1"	
s	34	#4	10'-1"	
u	8	#6	11'-6"	
v	20	#5	4'-9"	
v_1	33	#4	3'-3"	
Class X Concrete			Cu. Yds.	12.6
Reinforcement Bars			Lbs.	1360
Steel Piles 10 BP 42			Lin. ft.	175

DESIGNED	James E. Ozzuit
CHECKED	J.D.
DRAWN	James E. Ozzuit
CHECKED	

Oct. 14 1969
EXAMINED — ENGINEER OF BRIDGE AND TRAFFIC STRUCTURES
PASSED — W. E. Baumann, ENGINEER OF DESIGN
APPROVED — Richard H. Wolterman, CHIEF HIGHWAY ENGINEER

WEST ABUTMENT
S.B.I. RT. 5 SEC. 24B-1
JO DAVIESS COUNTY
STA. 477+30.00

MODEL: $MODELNAME$
FILE NAME: $FILEL$

USER NAME = $USER$	DESIGNED -	REVISED -	
	DRAWN -	REVISED -	
PLOT SCALE = $SCALE$	CHECKED -	REVISED -	
PLOT DATE = $DATE$	DATE -	REVISED -	

STATE OF ILLINOIS
DEPARTMENT OF TRANSPORTATION

EXISTING STRUCTURE PLANS
SCALE: N.T.S. | SHEET OF SHEETS | STA. TO STA.

F.A.P. RTE.	SECTION	COUNTY	TOTAL SHEETS	SHEET NO.
301	24R	JO DAVIESS	594	362
		CONTRACT NO. 64B40		
		ILLINOIS FED. AID PROJECT		

FOR INFORMATION ONLY

STATE OF ILLINOIS
DEPARTMENT OF PUBLIC WORKS & BUILDINGS
DIVISION OF HIGHWAYS

ROUTE NO.	SECTION	COUNTY	TOTAL SHEETS	SHEET NO.
F.A.S. 5 / P.A.	24B-1	JO DAVIESS	32	10
FED. ROAD DIST. NO. 7	ILLINOIS	FED. AID PROJECT		

SHEET NO. 5
7 SHEETS

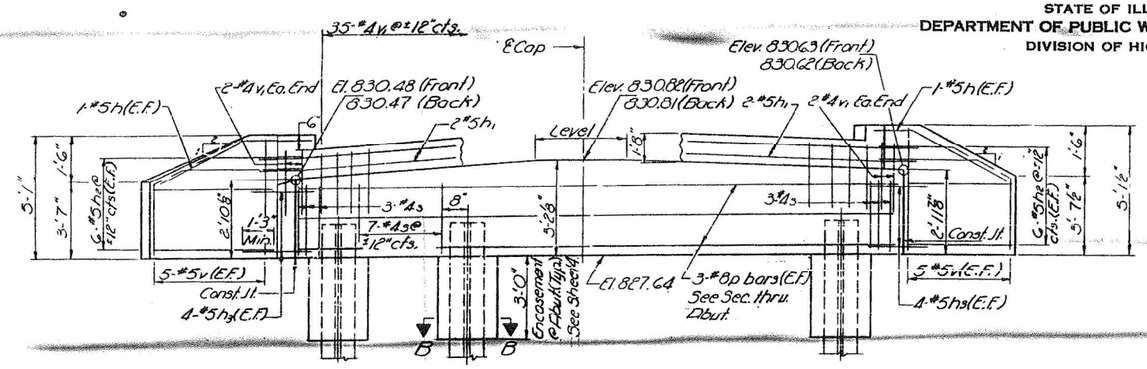

ELEVATION
LOOKING EAST

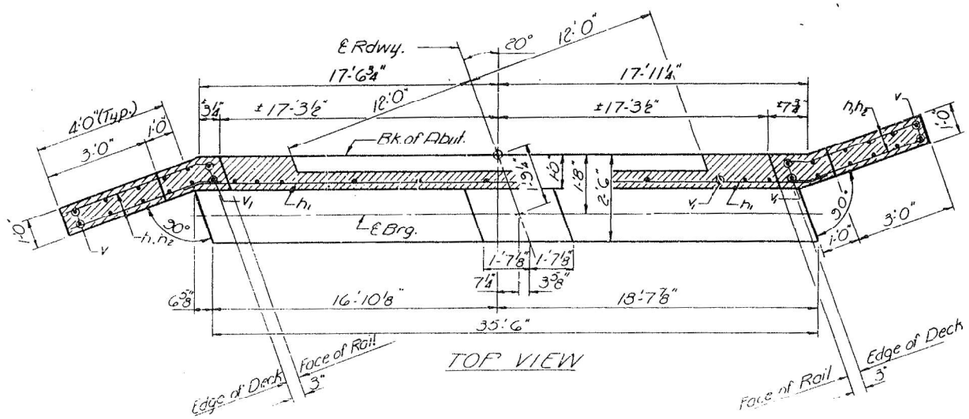

TOP VIEW

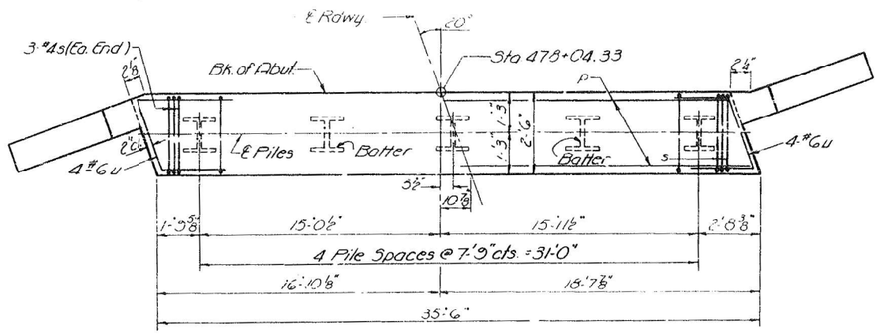

PLAN ABUT. CAP

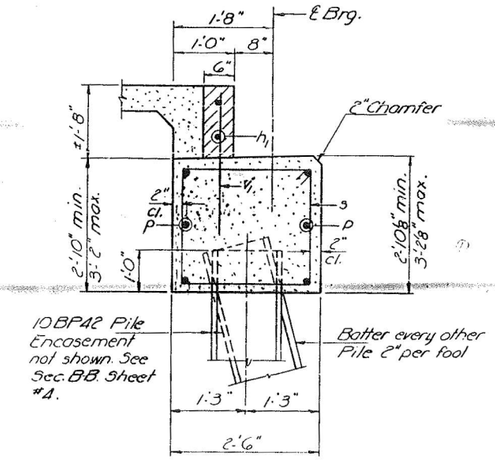

SEC. THRU. ABUT.

Notes: Bend bars h, h2 & v in field to fit if necessary.
Backwall and wingwalls shall be formed and poured after beams have been erected.
Back wall Class X Concrete billed with Substructure.

PILE DATA
Type: Steel 10BP42
Capacity: Drive to refusal
Length: 35'-0"
No. Req'd. 5

Note: Details of bars h1, h3, s & u are shown on Sheet #4.

BILL OF MATERIAL

Bar	No.	Size	Length	Shape
h	4	#5	4'-0"	
h1	4	#5	20'-0"	
h2	24	#5	3'-9"	
h3	16	#5	3'-0"	
p	6	#8	35'-1"	
s	34	#4	10'-1"	
u	8	#6	11'-6"	
v	20	#5	4'-9"	
v1	39	#4	3'-3"	
Class X Concrete			Cu. Yds.	12.5
Reinforcement Bars			Lbs.	1360
Steel Piles 10BP42			Lin. Ft.	175

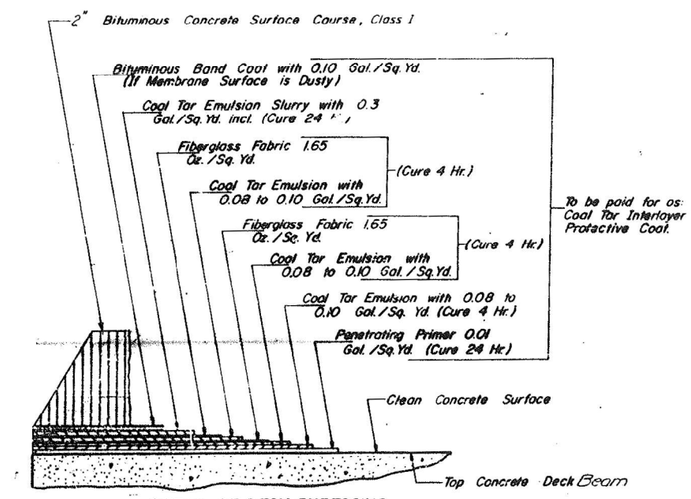

DETAIL OF DECK SURFACING

EAST ABUTMENT
S.B.I. RT. 5 SEC. 24B-1
JO DAVIESS COUNTY
STA. 477+30.00

DESIGNED	Lance E. Ozzuet
CHECKED	JB Nelson
JD. DRAWN	Lance E. Ozzuet
CHECKED	JBN

Oct. 14 1969
EXAMINED — ENGINEER OF BRIDGE AND TRAFFIC STRUCTURES
PASSED — N. E. Baumann, ENGINEER OF DESIGN
APPROVED — Richard H. Mostermann, CHIEF HIGHWAY ENGINEER

USER NAME = $USER$	DESIGNED -	REVISED -
	DRAWN -	REVISED -
PLOT SCALE = $SCALE$	CHECKED -	REVISED -
PLOT DATE = $DATE$	DATE -	REVISED -

STATE OF ILLINOIS
DEPARTMENT OF TRANSPORTATION

EXISTING STRUCTURE PLANS

SCALE: N.T.S. | SHEET OF SHEETS | STA. TO STA.

F.A.P. RTE.	SECTION	COUNTY	TOTAL SHEETS	SHEET NO.
301	24R	JO DAVIESS	594	363
		CONTRACT NO. 64B40		
		ILLINOIS	FED. AID PROJECT	

MODEL: $MODELNAME$
FILE NAME: $FILE$

FOR INFORMATION ONLY

STATE OF ILLINOIS
DEPARTMENT OF PUBLIC WORKS & BUILDINGS
DIVISION OF HIGHWAYS

ROUTE NO.	SECTION	COUNTY	TOTAL SHEETS	SHEET NO.
S.B.I. 5 F.A.	24B-1	JO DAVIESS	32	11
FED. ROAD DIST. NO. 7	ILLINOIS	FED. AID PROJECT		

SHEET NO. 6 / 7 SHEETS

PILE DATA
Type : Steel - 10 BP 42
Capacity : Drive Piles to refusal
Length : 34'-0"
No. Req'd. : 11 plus 1 test pile in permanent location in Pier Bent #1.

Front Face = East Face
Back Face = West Face

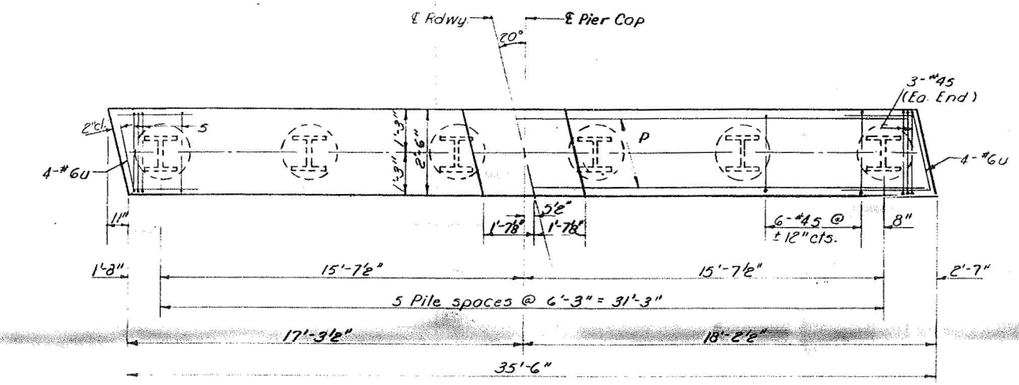

PLAN - PIER CAP

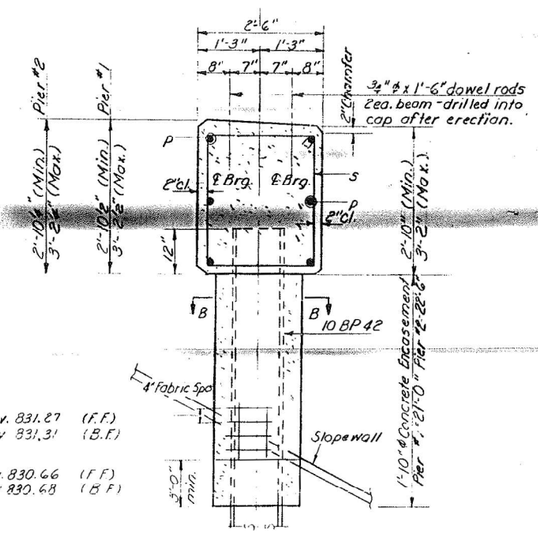

SEC. A-A

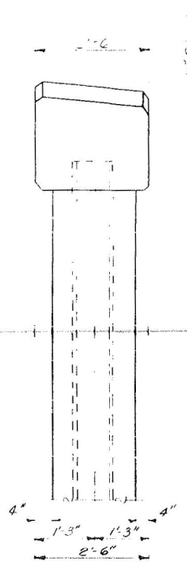

END VIEW

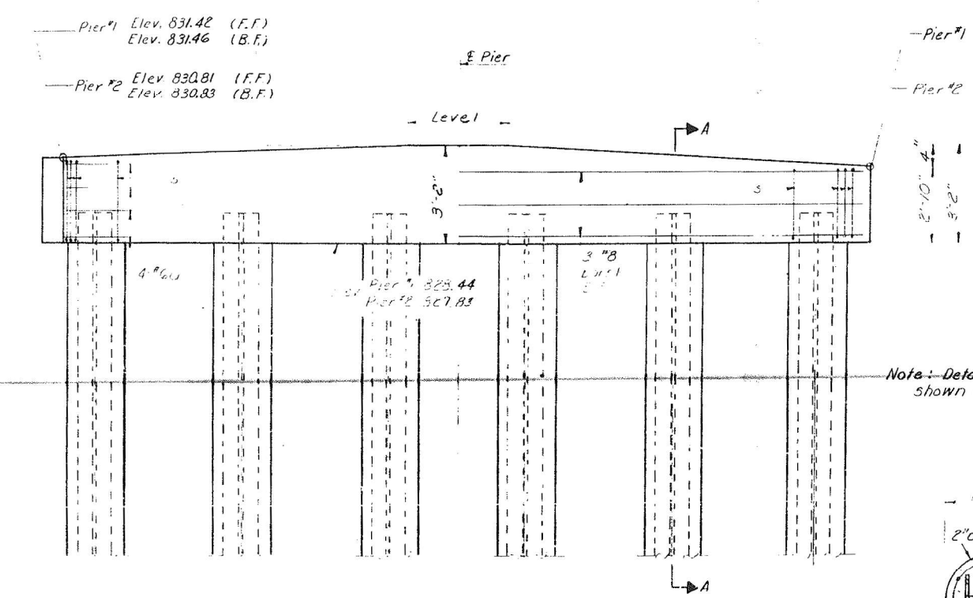

ELEVATION
(Looking West)

Note : ~~Details of bars S&U~~ shown on sheet #4.

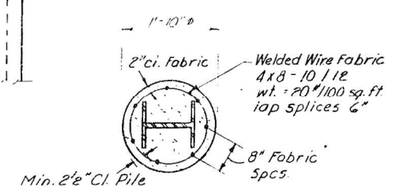

SEC. B-B
(Col. Detail)

TWO PIERS
BILL OF MATERIAL

Bar	No.	Size	Length	Shape
P	12	#8	35'-1"	—
S	72	#4	10'-1"	□
U	16	#6	11'-6"	⊏

Class X Concrete	Cu. Yds.	20.1
Reinforcement Bars	Lbs.	1890
Steel Piles 10BP 42	Lin. Ft.	374
Test Piles Steel 10BP 42	Ea.	1
Class X Conc. Encasement	Cu. Yds.	23.5

PIER BENT (1 & 2)
S.B.I. RT. 5 SEC. 24B-1
JO DAVIESS COUNTY
STA. 477+30.00

DESIGNED	Dennis C. Oggerino
CHECKED	J. H. Robinson
DRAWN	Dennis C. Oggerino / Bev Robinson
CHECKED	JBR

OCT. 14 1969
EXAMINED — ENGINEER OF BRIDGE AND TRAFFIC STRUCTURES
PASSED — W. E. Baumann, ENGINEER OF DESIGN
APPROVED — Richard H. Gorterman, CHIEF HIGHWAY ENGINEER

MODEL: $MODELNAME$
FILE NAME: $FILEL$

USER NAME = $USER$	DESIGNED -	REVISED -	
	DRAWN -	REVISED -	
PLOT SCALE = $SCALE$	CHECKED -	REVISED -	
PLOT DATE = $DATE$	DATE -	REVISED -	

STATE OF ILLINOIS
DEPARTMENT OF TRANSPORTATION

EXISTING STRUCTURE PLANS

SCALE: N.T.S. | SHEET OF SHEETS | STA. TO STA.

F.A.P. RTE.	SECTION	COUNTY	TOTAL SHEETS	SHEET NO.
301	24R	JO DAVIESS	594	364
		CONTRACT NO. 64B40		
		ILLINOIS	FED. AID PROJECT	

FOR INFORMATION ONLY

STATE OF ILLINOIS
DEPARTMENT OF PUBLIC WORKS & BUILDINGS
DIVISION OF HIGHWAYS

ROUTE NO.	SECTION	COUNTY	TOTAL SHEETS	SHEET NO.
F.A.S. 6	24B-1	JO DAVIESS	32	12
FED. ROAD DIST. NO. 7	ILLINOIS	FED. AID PROJECT		

SHEET NO. 7
7 SHEETS

BORING #1

Boring No. 1
Station 477+45
Offset 70' Rt ℄

Description	Elevation	N	Qu t/s.f.	w (%)
Ground Surface	809.7	0		
Black Silty Clay Loam with Rocks	808.7			
Medium Brown Silty Clay (Rocks)				
	-5			
		6	B .8	22
	802.7			
Very Soft Brown Silty Clay (H_2O)		-1	E .1	
"Refusal" - 10.2'	799.5	-10		
Augered Rotten Limestone				
	796.9			
Cored Brown Rotten, Porous, Fossilized Limestone (20% Recovery)	-15			
	-20			
	788.9			
End of Boring				

BORING #2

Boring No. 2
Station 477+84
Offset 50' Rt ℄

Description	Elevation	N	Qu t/s.f.	w (%)
Ground Surface	811.10			
Black Silty Clay Loam	809.6			
Medium Brown Silty Clay		6	B .6	20
	806.6			
	-5			
Stiff Brown Clay		5	B 1.1	22
		6	B 1.2	22
	801.5			
	-10			
Medium Chipped Rock with Clay Binder				
"Refusal" - 11.4'	799.7	-22		
Drilled Rotten Brown Limestone				
	796.1	-15		
Cored Soft Brown Lime Stone (20% Recovery)				
	791.1	-20		
End of Boring				

BORING #3

Boring No. 3
Station 477+12
Offset 48' Rt ℄

Description	Elevation	N	Qu t/s.f.	w (%)
Ground Surface	803.6	0		
Brown Clay with Cobbles				
"Refusal" - 4.9'	798.7	-5		
Drilled Rotten Brown Limestone				
	796.7			
Cored Porous Fossilized Limestone (15% recovery)				
	-10			
	791.7			
	-15			
	-20			

BORING #4

Boring No. 4
Station 476+75
Offset 50' Rt ℄

Description	Elevation	N	Qu t/s.f.	w (%)
Ground Surface	808.0	0		
Black Silty Clay Loam	805.5			
Medium Brown Clay Loam		5	B .7	27
	-5			
		10	B .9	27
	801.0			
Medium Brown Rotten Limestone		19		
"Refusal" - 10.1	797.9	-10		
Drilled Rotten Limestone	796.4			
Cored Rotten Limestone (20% Recovery)				
	-15			
	791.4			
End of Boring				
	-20			

DECK ELEVATIONS
(Top of Class I Surface)

Location	Beam	Station	Offset	Theoretical Grade Elevations
Bk. W. Abutment	South Edge of Deck ①	47645.664	16.500	834.655
℄ Brg		47647.438	16.500	834.609
A		47649.325	16.500	834.586
B		47671.900	16.500	834.027
C		47693.594	16.500	833.562
℄ Pier #1		47696.924	16.500	833.538
D		47699.255	16.500	833.515
℄ Structure		47721.994	16.500	833.152
E		47745.734	16.500	832.881
℄ Pier #2		47747.064	16.500	832.870
F		47748.395	16.500	832.858
G		47772.029	16.500	832.693
H		47795.664	16.500	832.621
℄ Brg.		47796.551	16.500	832.621
Bk. E. Abutment		47798.324	16.500	832.619
Bk. W. Abutment	℄ Structure Ⓒ	47651.670	0.0	834.693
℄ Brg.		47653.444	0.0	834.649
A		47654.330	0.0	834.627
B		47677.965	0.0	834.092
C		47701.600	0.0	833.650
℄ Pier #1		47702.930	0.0	833.626
D		47704.260	0.0	833.606
℄ Structure		47726.000	0.0	833.266
E		47751.740	0.0	833.021
℄ Pier #2		47753.070	0.0	833.010
F		47754.400	0.0	832.999
G		47778.035	0.0	832.898
H		47801.669	0.0	832.810
℄ Brg.		47802.556	0.0	832.810
Bk. E. Abutment		47804.330	0.0	832.810
Bk. W. Abutment	North Edge of Deck ②	47657.676	-16.500	834.354
℄ Brg		47659.449	-16.500	834.312
A		47660.336	-16.500	834.291
B		47683.971	-16.500	833.779
C		47707.605	-16.500	833.361
Pier #1		47708.935	-16.500	833.340
D		47710.266	-16.500	833.319
℄ Structure		47734.005	-16.500	833.003
E		47757.745	-16.500	832.781
℄ Pier #2		47759.075	-16.500	832.772
F		47760.406	-16.500	832.762
G		47784.040	-16.500	832.645
H		47807.675	-16.500	832.621
℄ Brg.		47808.562	-16.500	832.622
Bk. E. Abutment		47810.335	-16.500	832.624

N-Standard Penetration Test-Blows per foot to drive 2" O.D. Split Spoon Sampler 12" with 140 # hammer falling 30".

Qu-Unconfined Compressive Strength-t/sf
w-Water Content-percentage of oven dry weight-%.

Type failure
B-Bulge Failure
S-Shear Failure
E-Estimated Value
P-Penetrometer

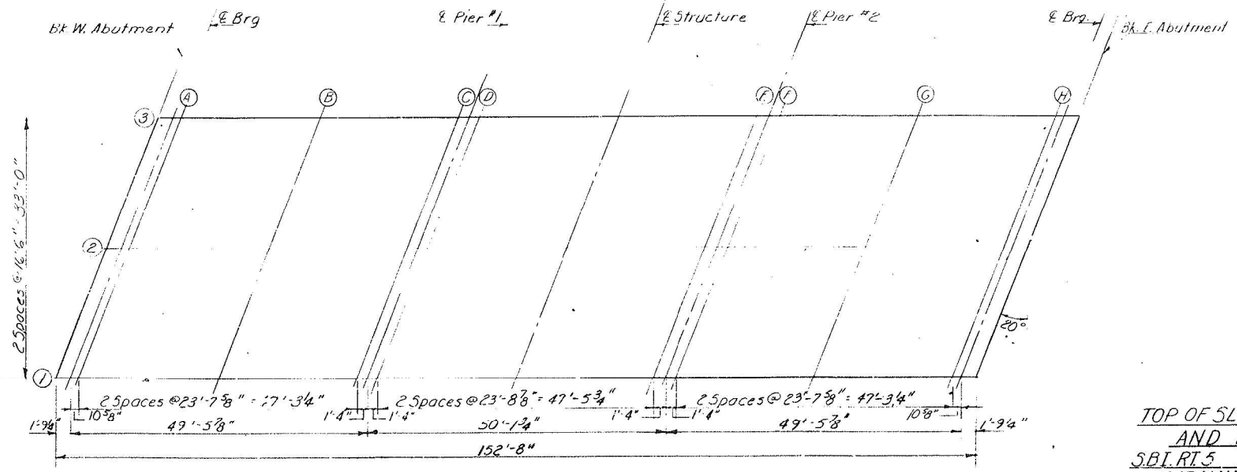

PLAN

TOP OF SLAB ELEVATIONS AND BORINGS
S.B.I. RT. 5 SEC. 24 B-1
JO DAVIESS COUNTY
STA. 477+30.00

DESIGNED	James E. Ogyuz	Oct. 14 1969
CHECKED		EXAMINED — ENGINEER OF BRIDGE AND TRAFFIC STRUCTURES
DRAWN	Bev Robinson	PASSED — M. E. Baumann, ENGINEER OF DESIGN
CHECKED	J. B. Nelson	APPROVED — Richard H. Mudlaumer, CHIEF HIGHWAY ENGINEER

USER NAME = $USER$	DESIGNED -	REVISED -	
	DRAWN -	REVISED -	
PLOT SCALE = $SCALE$	CHECKED -	REVISED -	
PLOT DATE = $DATE$	DATE -	REVISED -	

STATE OF ILLINOIS
DEPARTMENT OF TRANSPORTATION

EXISTING STRUCTURE PLANS

SCALE: N.T.S. | SHEET OF SHEETS | STA. TO STA.

F.A.P. RTE.	SECTION	COUNTY	TOTAL SHEETS	SHEET NO.
301	24R	JO DAVIESS	594	365
		CONTRACT NO. 64B40		
		ILLINOIS FED. AID PROJECT		

FOR INFORMATION ONLY

MODEL: $MODEL$NAME
FILE NAME: $FILEL$

SBI RT 5 SEC. 24B-1
JO DAVIESS CO.
STA. 477+30

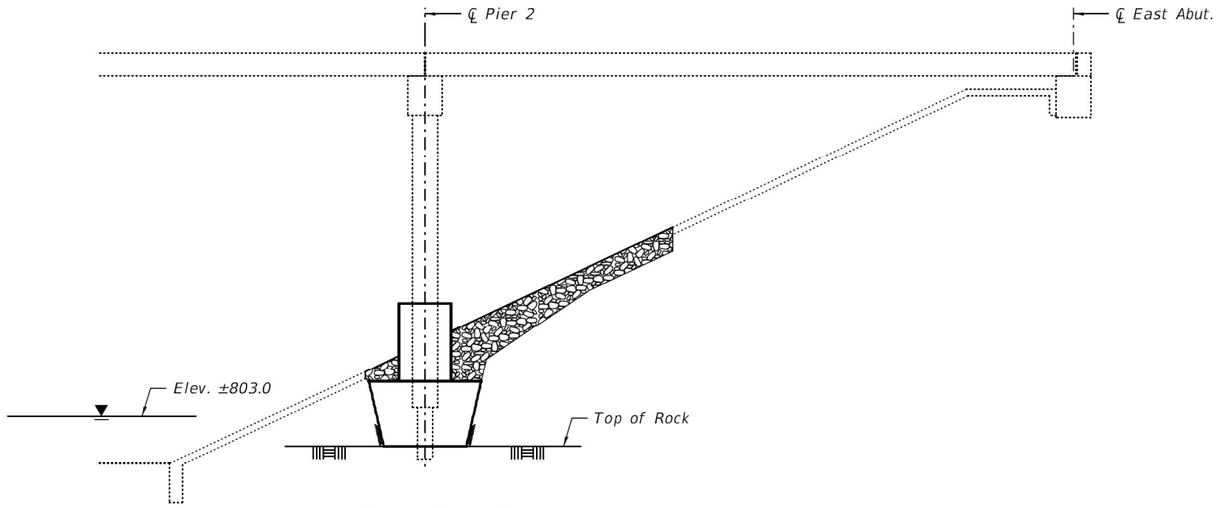

PARTIAL ELEVATION

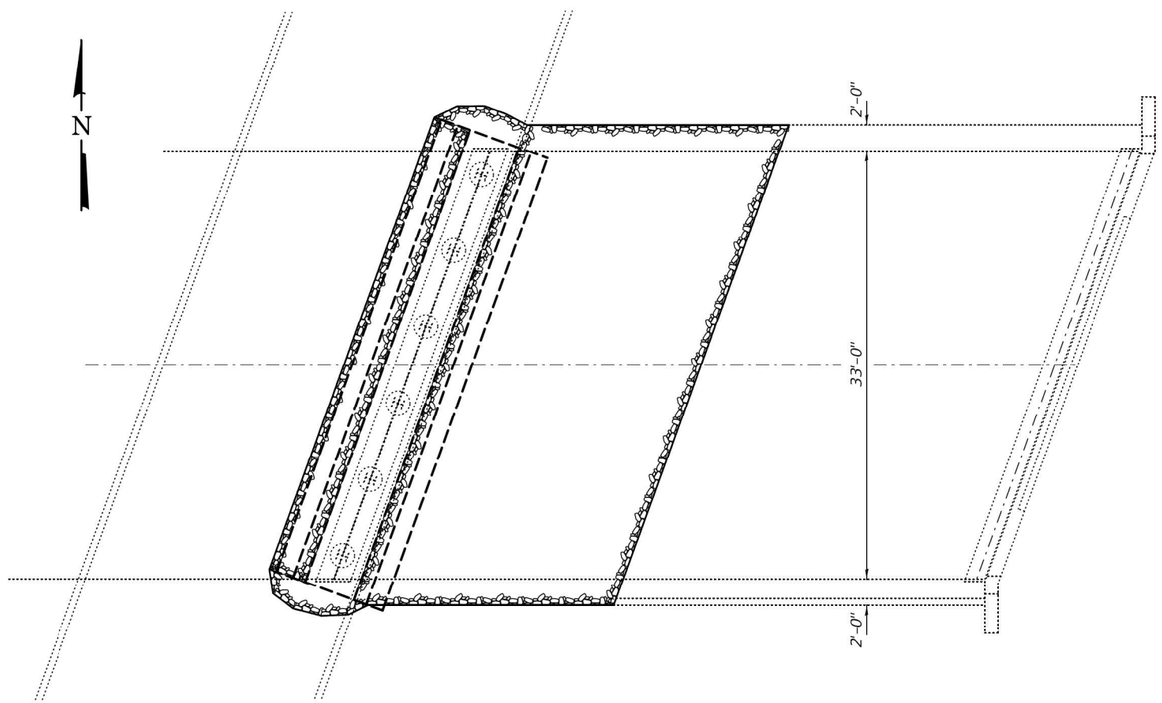

PARTIAL PLAN

Scope:
Remove & replace damaged slopewall at Pier 2 and build a lateral stability wall.

GENERAL NOTES

Reinforcement bars designated (E) shall be epoxy coated.

Plan dimensions and details relative to existing plans are subject to nominal construction variations. The Contractor shall field verify existing dimensions and details affecting new construction and make necessary approved adjustments prior to construction or ordering of materials. Such variations shall not be cause for additional compensation for a change in scope of the work, however, the Contractor will be paid for the quantity actually furnished at the unit price bid for the work.

Road closure is required until Pour #1 has reached strength.

DESIGN STRESSES

f'c = 4,000 psi (Concrete)
fy = 60,000 psi (Reinforcement)

TOTAL BILL OF MATERIAL

ITEM	UNIT	QUANTITY
Slopewall Removal	Sq. Yd.	99
Structure Excavation	Cu. Yd.	131
Concrete Structures	Cu. Yd.	83.3
Reinforcement Bars, Epoxy Coated	Pound	5020
Stone Riprap, Class A5	Ton	133
Filter Fabric	Sq. Yd.	100

DRAFT
DATE: 7/12/2018
EXPIRES 11-30-2018

DESIGNED	EXAMINED	DATE - JULY 12, 2018	STATE OF ILLINOIS DEPARTMENT OF TRANSPORTATION
CHECKED	ENGINEER OF STRUCTURAL SERVICES		
DRAWN daburdell	PASSED	REVISED -	
CHECKED	ENGINEER OF BRIDGES AND STRUCTURES	REVISED -	

REPAIR DETAILS
F.A.P. RTE. 301 (US 20) OVER RUSH CREEK
SN 043-0036
SHEET NO. 1 OF 3 SHEETS

F.A.P. RTE.	SECTION	COUNTY	TOTAL SHEETS	SHEET NO.
301	24R	JO DAVIESS	594	366
		CONTRACT NO. 64B40		
	ILLINOIS	FED. AID PROJECT		

FOR INFORMATION ONLY

REMOVAL SEQUENCE

1. Remove failed slopewall.
2. Remove soil under slopewall.
3. Remove failed slopewall.
4. Remove soil under slopewall.

Contractor must exercise extreme care during removal operations to prevent impact on piles.

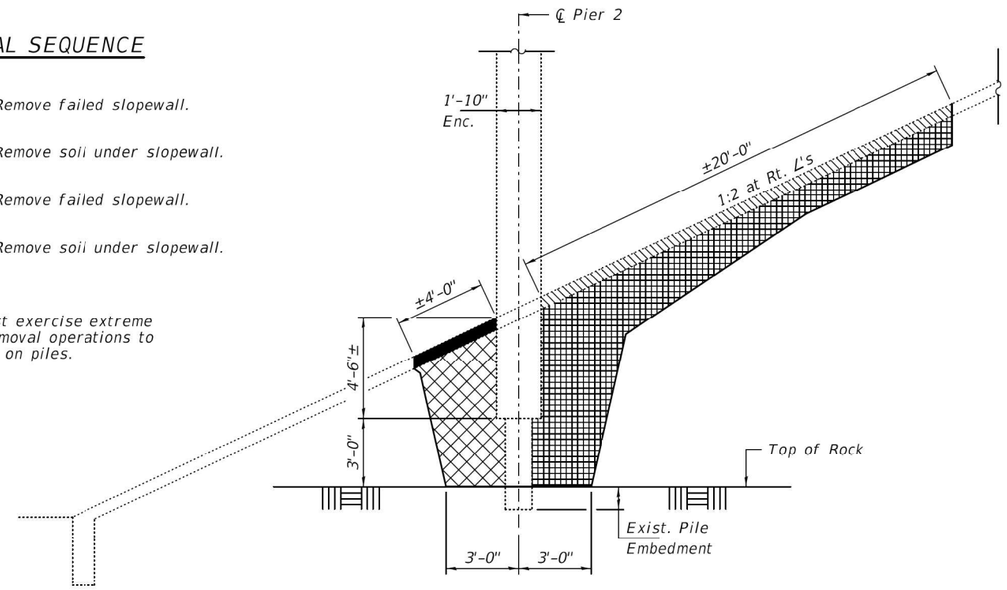

SECTION THRU PIER 2

(Showing Removal)
Dimensions at Rt. ∠'s to Pier.
(Looking North)

PIER 2 SLOPEWALL DAMAGE

(Looking West)

Notes:
Pour #1 to reach strength before Pour #2 is placed.
For reinforcent details, see sheet 3 of 3.

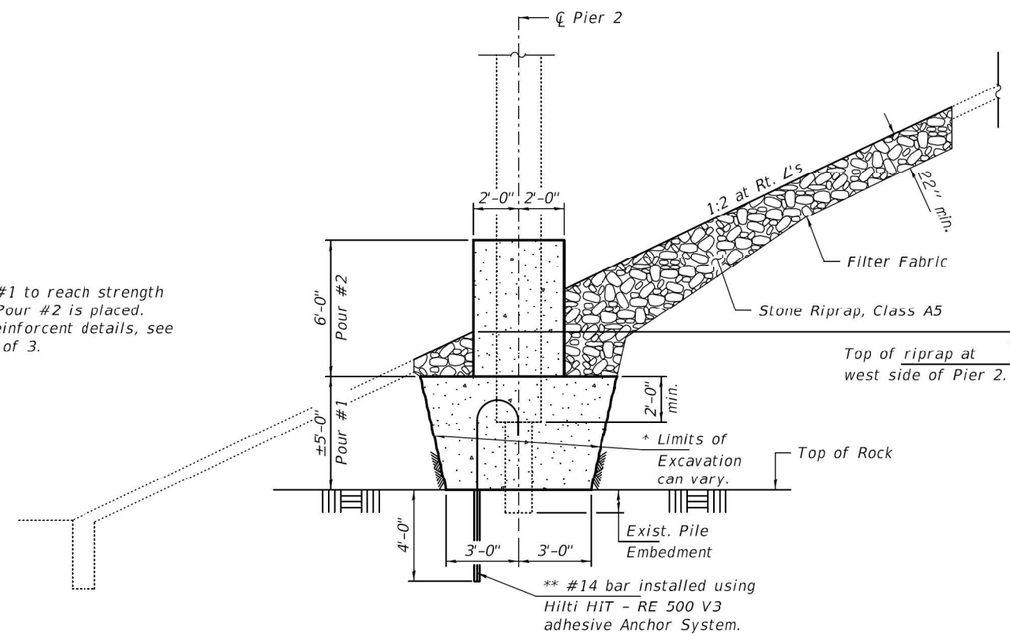

SECTION THRU PIER 2

(Showing Proposed)
Dimensions at Rt. ∠'s to Pier.
(Looking North)

PIER 2 SLOPEWALL DAMAGE

(Looking East)

* Concrete in Pour #1 is to placed inside excavation limits.

** Cost included with Reinforcement Bars, Epoxy Coated.

DRAFT

DATE: 7/12/2018

DESIGNED - XXX	EXAMINED	DATE - JULY 12, 2018	STATE OF ILLINOIS DEPARTMENT OF TRANSPORTATION
CHECKED - XXX	ENGINEER OF STRUCTURAL SERVICES		
DRAWN - daburdell	PASSED	REVISED -	
CHECKED - XXX	ENGINEER OF BRIDGES AND STRUCTURES	REVISED -	

REPAIR DETAILS
SN 043-0036

SHEET NO. 2 OF 3 SHEETS

F.A.P. RTE.	SECTION	COUNTY	TOTAL SHEETS	SHEET NO.
301	24R	JO DAVIESS	594	367
		CONTRACT NO. 64B40		
		ILLINOIS	FED. AID PROJECT	

FOR INFORMATION ONLY

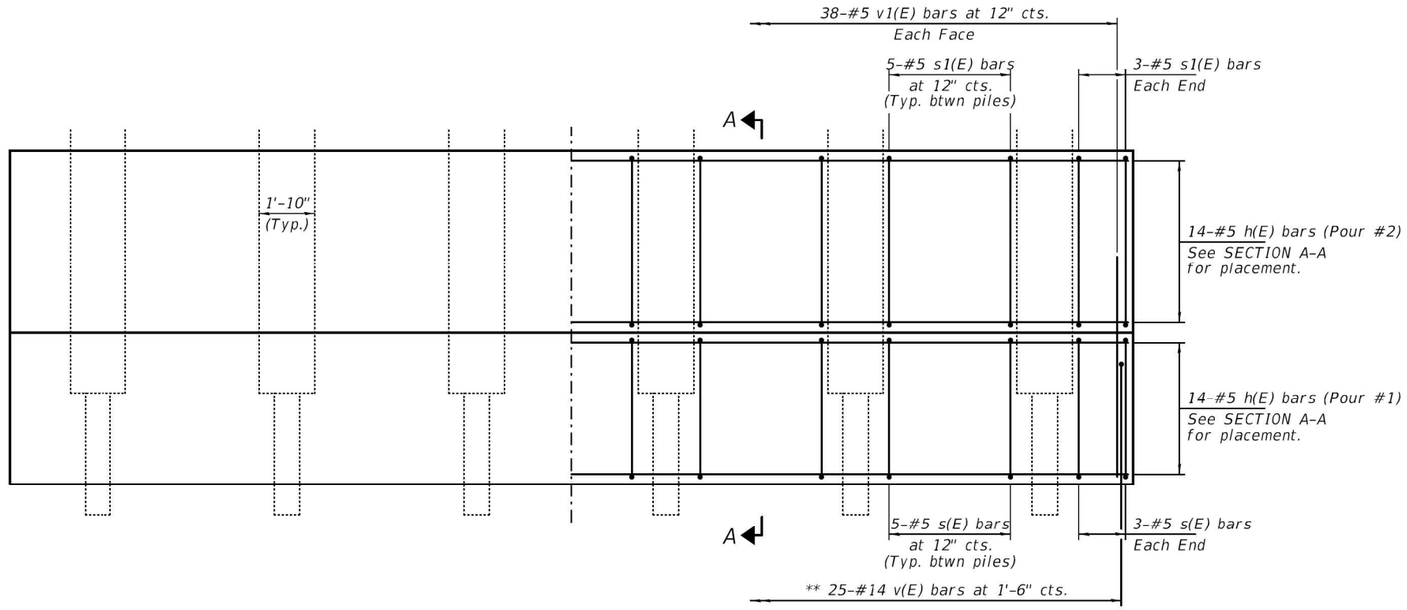

ELEVATION
(Looking East)

** At locations where there is interference with pile encasement bar should be turned. (West side only)

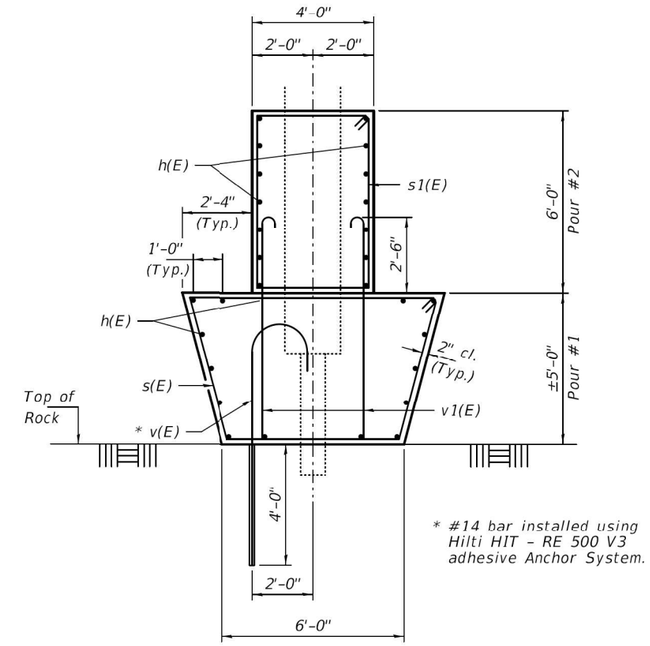

* #14 bar installed using Hilti HIT - RE 500 V3 adhesive Anchor System.

SECTION A-A

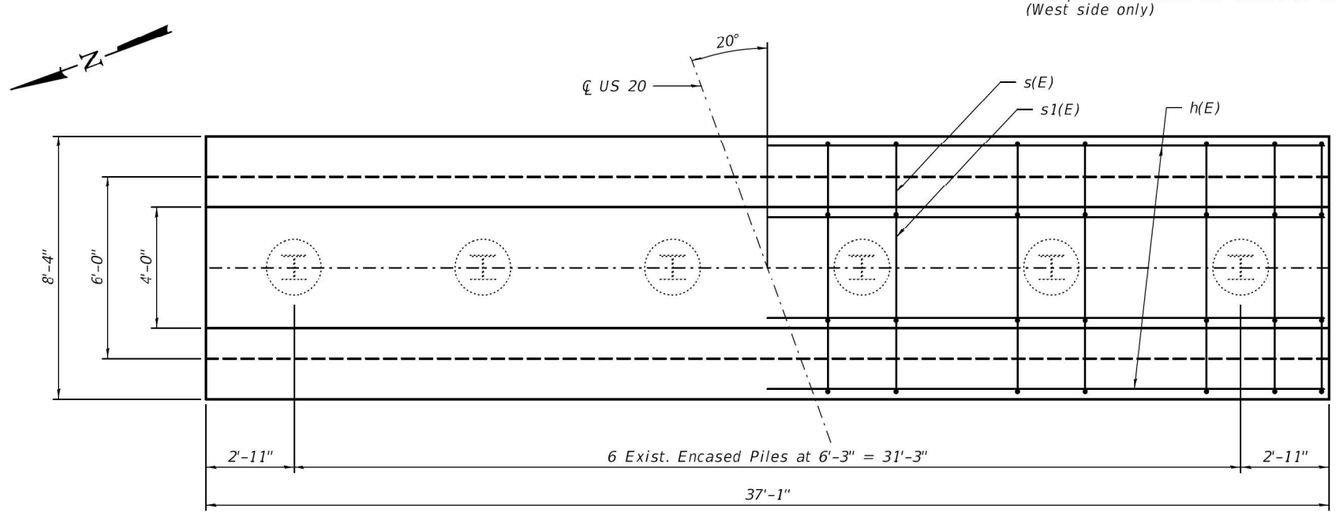

PLAN
(Looking East)

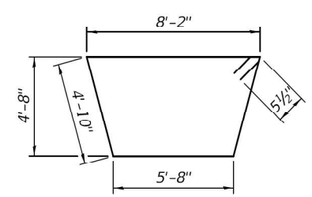

BAR s(E)

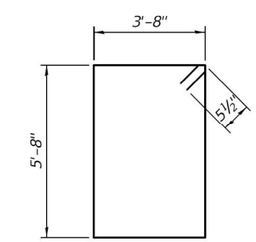

BAR s1(E)

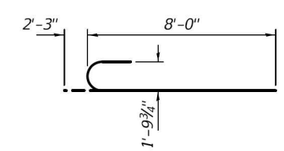

BAR v(E)

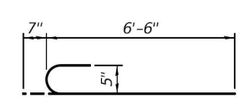

BAR v1(E)

BILL OF MATERIAL

Bar	No.	Size	Length	Shape
h(E)	28	#5	24'-11"	
v(E)	25	#14	10'-3"	
v1(E)	76	#5	7'-1"	
s(E)	31	#5	24'-5"	
s1(E)	31	#5	19'-7"	
Concrete Structures			Cu. Yd.	83.3
Reinforcement Bars, Epoxy Coated			Pound	5020

DRAFT
DATE: 7/12/2018

DESIGNED - XXX	EXAMINED	DATE - JULY 12, 2018	STATE OF ILLINOIS DEPARTMENT OF TRANSPORTATION
CHECKED - XXX	ENGINEER OF STRUCTURAL SERVICES		
DRAWN - daburdell	PASSED	REVISED -	
CHECKED - XXX	ENGINEER OF BRIDGES AND STRUCTURES	REVISED -	

REPAIR DETAILS
SN 043-0036
SHEET NO. 3 OF 3 SHEETS

F.A.P. RTE.	SECTION	COUNTY	TOTAL SHEETS	SHEET NO.
301	24R	JO DAVIESS	594	368
		CONTRACT NO. 64B40		
		ILLINOIS FED. AID PROJECT		

FOR INFORMATION ONLY

HOT-MIX ASPHALT SHOULDER

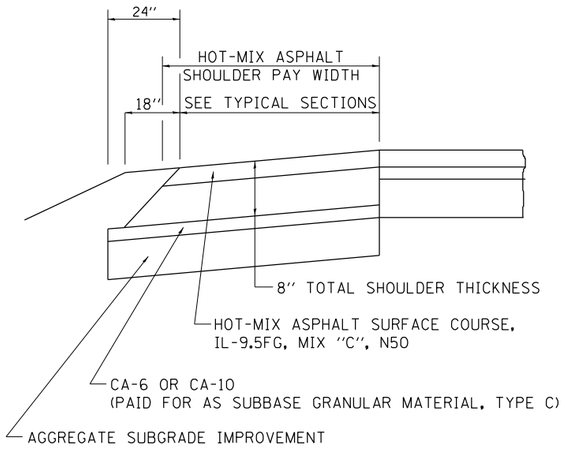

GENERAL NOTES

THE HOT-MIX ASPHALT SHOULDER SHALL BE CONSTRUCTED IN ACCORDANCE WITH SECTION 482 EXCEPT THE TOP LIFT SHALL BE HOT-MIX ASPHALT SURFACE COURSE, MIX "C", N50. THE WORK WILL BE PAID FOR AT THE CONTRACT UNIT PRICE PER TON FOR HOT-MIX ASPHALT SURFACE COURSE, MIX "C", N50 AND SQUARE YARD FOR HOT-MIX ASPHALT SHOULDERS OF THE THICKNESS SPECIFIED.

USE HOT-MIX ASPHALT SURFACE COURSE, MIX "C", N50. WHEN RESURFACING EXISTING HOT-MIX ASPHALT SHOULDERS. THE THICKNESS IS SHOWN ON THE TYPICAL SECTIONS. THIS WORK WILL BE PAID FOR AT THE CONTRACT UNIT PRICE PER TON FOR HOT-MIX ASPHALT SURFACE COURSE, MIX "C", N50.

REMOVAL OF MATERIAL FOR PLACEMENT OF THE HOT-MIX ASPHALT SHOULDER TO BE PAID FOR IN UNITS FOR EXCAVATING AND GRADING EXISTING SHOULDERS OR IN CUBIC YARDS FOR EARTH EXCAVATION OR EARTH EXCAVATION WIDENING.

* 4% WHEN MAINLINE IS ON TANGENT. FOR CROSS SLOPE ON SUPERELEVATION SECTION, SEE HIGHWAY STANDARD 482001 OR 482006.

TYPICAL AGGREGATE BASE SIDEROAD

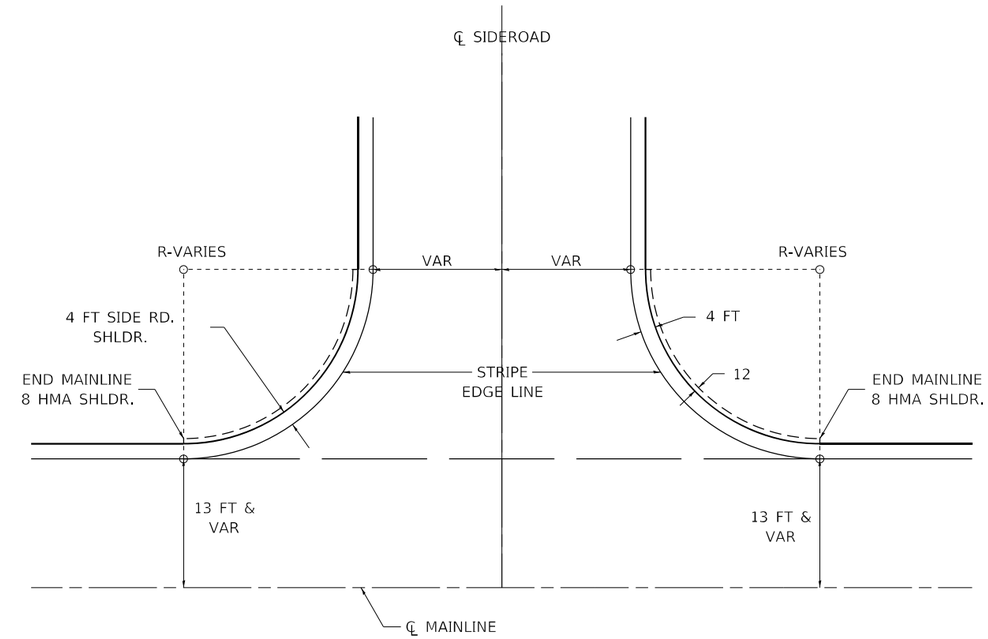

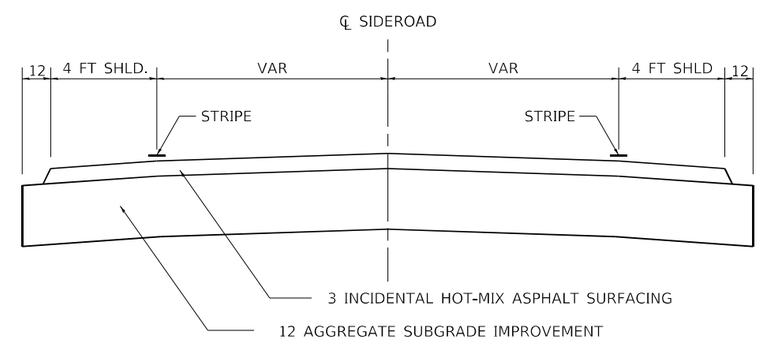

ALL DIMENSIONS ARE IN INCHES UNLESS OTHERWISE NOTED.

USER NAME = BenhamJ	DESIGNED -	REVISED -	STATE OF ILLINOIS DEPARTMENT OF TRANSPORTATION
	DRAWN -	REVISED -	
PLOT SCALE = 100.0000 ' / in.	CHECKED -	REVISED -	
PLOT DATE = 10/6/2024	DATE -	REVISED -	

REGION 2 / DISTRICT 2 STANDARD

SCALE: N/A | SHEET NO. 1 OF 29 SHEETS | STA. TO STA.

F.A.P RTE.	SECTION	COUNTY	TOTAL SHEETS	SHEET NO.
301	24R	JO DAVIESS	594	369
		CONTRACT NO. 64B40		
FED. ROAD DIST. NO.	ILLINOIS	FED. AID PROJECT		

RIPRAP AT END SECTIONS

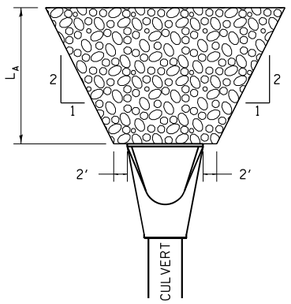

FLARED END SECTION

L_A = APRON LENGTH (ft)

IF THE CULVERT OUTLETS INTO A DEFINED CHANNEL, RIPRAP BANK TO BANK FOR LENGTH (L_A).

STANDARD END SECTION:
542001 (PIPE), 542011 (ELLIPTICAL)
DISTRICT STANDARD 10.1 (BOX).

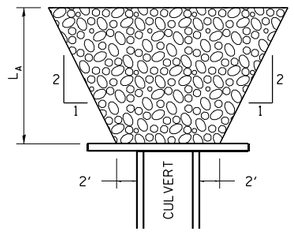

CULVERT WITH HEADWALL

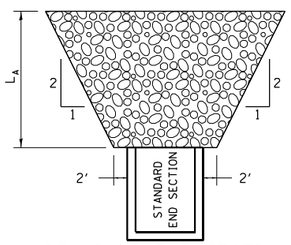

STANDARD END SECTION

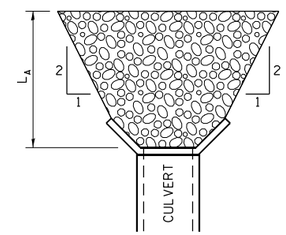

CULVERT WITH WING WALLS

REVISED - 7-13-16
REVISED - 11-12-14
REVISED - 2-10-14

RIPRAP AT END SECTIONS **19.4**

CAST–IN–PLACE REINFORCED CONCRETE END SECTIONS

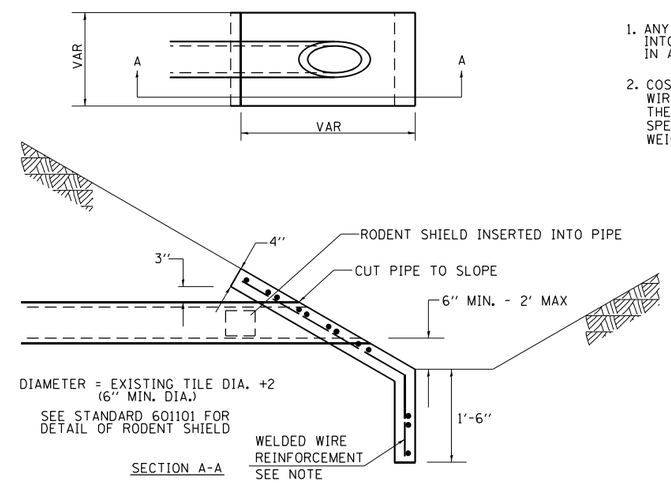

NOTES

1. ANY STORM SEWER OR FIELD TILE OUTLET INTO A DITCH SHALL HAVE A HEADWALL BUILT IN ACCORDANCE WITH THIS DETAIL.
2. COST OF FURNISHING AND INSTALLING WELDED WIRE REINFORCEMENT SHALL BE INCLUDED IN THE CONTRACT UNIT PRICE EACH OF THE SIZE SPECIFIED. WELDED WIRE REINFORCEMENT TO WEIGH NOT LESS THAN 58 lbs/100 sq. ft.

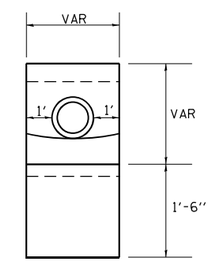

REVISED - 1-05-16
REVISED - 10-09-12
REVISED -

CAST–IN–PLACE REINFORCED CONCRETE END SECTIONS **28.4**

REVISED -	REGION 2 / DISTRICT 2 STANDARD			F.A.P RTE.	SECTION	COUNTY	TOTAL SHEETS / SHEET NO.
REVISED -				301	24R	JO DAVIESS	594 : 370
REVISED -						CONTRACT NO. 64B40	
REVISED -	SCALE: N/A	SHEET NO. 2 OF 29 SHEETS	STA. TO STA.	FED. ROAD DIST. NO.	ILLINOIS	FED. AID PROJECT	

PLOT DATE = $DATE$

DELINEATOR AND POST ORIENTATION

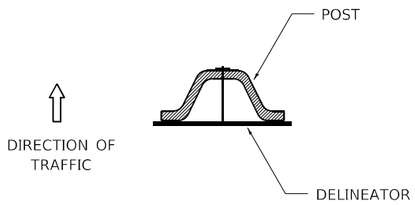

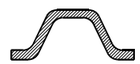

SECTION D-D

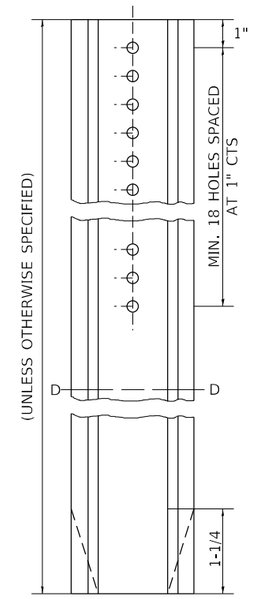

DELINEATORS SHALL BE INSTALLED ACCORDING TO STANDARD 635001 EXCEPT THAT THE POST SHALL BE ROTATED 180° . THE POST WILL HAVE THE WIDE SIDE FACING TRAFFIC AND THE DELINEATOR ATTACHECD AS SHOWN ABOVE.

ALL DIMENSIONS ARE IN INCHES UNLESS OTHERWISE NOTED.

REVISED - 10-03-11

DELINEATOR AND POST ORIENTATION 37.4

TYPICAL BENCHING ON EXISTING EMBANKMENT

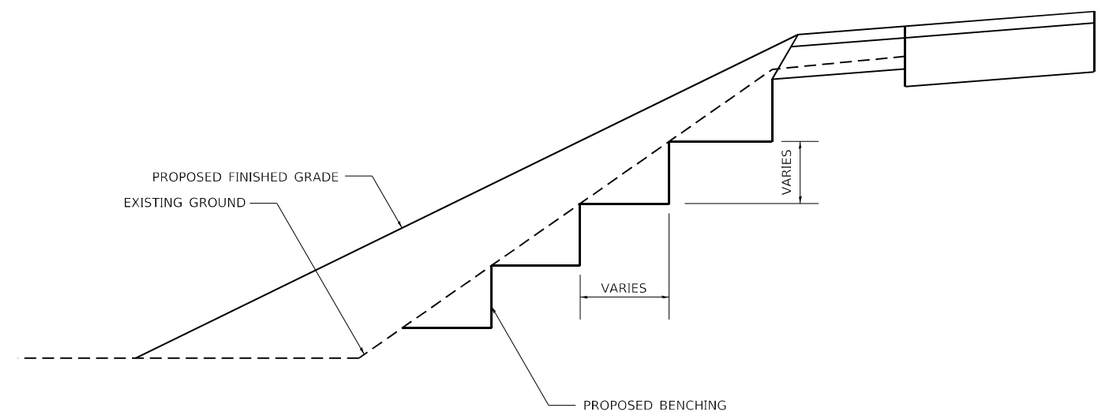

REVISED - 2-22-06

TYPICAL BENCHING ON EXISTING EMBANKMENT 50.4

REVISED -	REGION 2 / DISTRICT 2 STANDARD		F.A.P RTE.	SECTION	COUNTY	TOTAL SHEETS / SHEET NO.
REVISED -			301	24R	JO DAVIESS	594 : 371
REVISED -					CONTRACT NO. 64B40	
REVISED -	SCALE: N/A	SHEET NO. 3 OF 29 SHEETS STA. TO STA.	FED. ROAD DIST. NO.	ILLINOIS	FED. AID PROJECT	

PLOT DATE = 10/6/2024

TYPICAL CONSTRUCTION OF EMBANKMENTS WITH GRANULAR MATERIAL

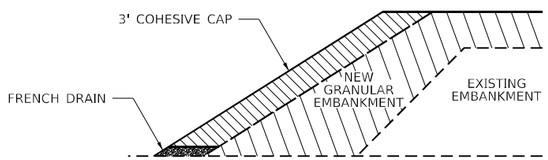

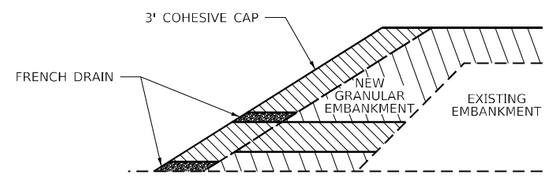

GRANULAR MATERIAL

COHESIVE MATERIAL

NOTES:

WHEN THE CONTRACTOR ELECTS TO USE A GRANULAR TYPE OF MATERIAL TO CONSTRUCT THE NEW EMBANKEMENT, A 3' THICK COHESIVE MATERIAL WILL BE REQUIRED ON THE SLOPE CONSTRUCTED CONCURRENTLY WITH THE GRANULAR EMBANKMENT LIFTS.

IF THE CONTRACTOR SWITCHES BETWEEN GRANULAR TYPES OF MATERIAL LIFTS AND COHESIVE MATERIAL LIFTS IN THE NEWER EMBANKMENT, FRENCH DRAINS SHALL BE CONSTRUCTED EVERY 250' ACCORDING TO ARTICLE 601.06. THE COST OF MATERIALS AND LABOR WILL BE INCLUDED IN THE CONTRACT UNIT PRICE OF EARTH EXCAVATION.

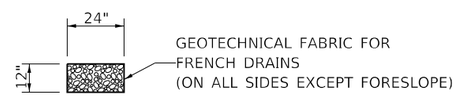

FRENCH DRAIN DETAIL

REVISED - 12-07-21

TYPICAL CONSTRUCTION OF EMBANKMENTS WITH GRANULAR MATERIAL 51.4

REVISED -	REGION 2 / DISTRICT 2 STANDARD			F.A.P RTE.	SECTION	COUNTY	TOTAL SHEETS	SHEET NO.
REVISED -				301	24R	JO DAVIESS	594 :	372
REVISED -						CONTRACT NO. 64B40		
REVISED -	SCALE: N/A	SHEET NO. 4 OF 29 SHEETS	STA. TO STA.	FED. ROAD DIST. NO.	ILLINOIS	FED. AID PROJECT		

PLOT DATE = 10/6/2024

STANDARD INLET FOR CURB & GUTTER

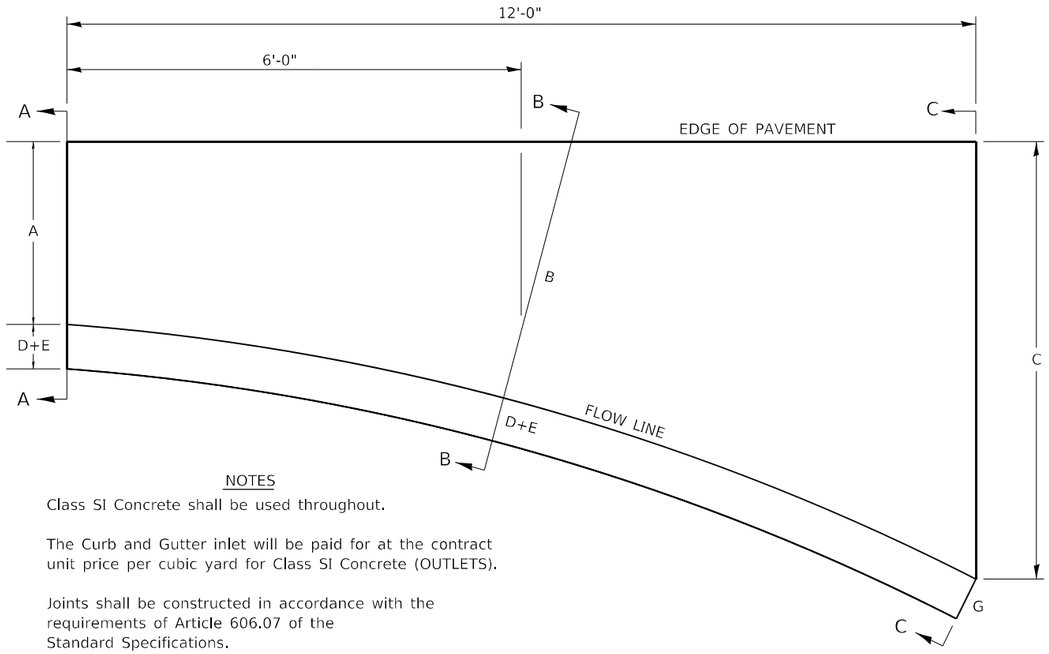

NOTES

Class SI Concrete shall be used throughout.

The Curb and Gutter inlet will be paid for at the contract unit price per cubic yard for Class SI Concrete (OUTLETS).

Joints shall be constructed in accordance with the requirements of Article 606.07 of the Standard Specifications.

When curb and gutter is constructed adjacent to flexible pavement, a 1" expansion joint shall be installed at construction joints.

All dimensions are in inches unless otherwise noted.

TYPE OF CURB & GUTTER	TABLE OF DIMENSIONS								CONCRETE QUANTITY A-A TO C-C (CU YDS)
	A	B	C	D	E	F	G	R	
B-6.06	6	15	4'	1	6	6	7	1	0.87
B-6.12	12	18.25	4'	1	6	6	7	1	0.95
B-6.18	18	27.25	4' 9"	1	6	6	7	1	1.18
B-6.24	24	32.4	4' 9"	1	6	6	7	1	1.30
M-4.06	6	17.8	3' 9"	4	3	4	7	3	0.75
M-4.12	12	18.25	4'	4	3	4	7	3	0.91
M-4.18	18	27.25	4' 9"	4	3	4	7	3	1.14
M-4.24	24	32.4	4' 9"	4	3	4	7	3	1.25
M-6.06	6	17.8	3' 9"	6	2	6	8	3	0.86
M-6.12	12	18.25	4'	6	2	6	8	2	0.96
M-6.18	18	27.25	4' 9"	6	2	6	8	2	1.20
M-6.24	24	32.4	4' 9"	6	2	6	8	2	1.30

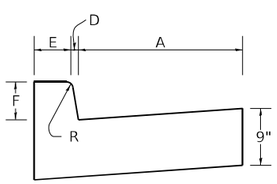

SECTION A-A

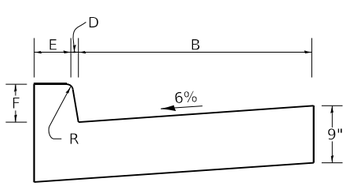

SECTION B-B

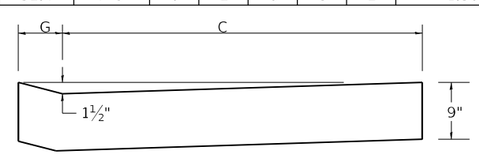

SECTION C-C

REVISED - 11-12-14
REVISED - 8-27-13
REVISED - 10-10-06

STANDARD INLET FOR CURB & GUTTER 21.2

USER NAME = BenhamJ	DESIGNED -	REVISED -	
	DRAWN -	REVISED -	
PLOT SCALE = 100.0000 ' / in.	CHECKED -	REVISED -	
PLOT DATE = 10/6/2024	DATE -	REVISED -	

STATE OF ILLINOIS
DEPARTMENT OF TRANSPORTATION

REGION 2 / DISTRICT 2 STANDARD

SCALE: N/A | SHEET NO. 5 OF 29 SHEETS | STA. | TO STA.

F.A.P RTE.	SECTION	COUNTY	TOTAL SHEETS	SHEET NO.
301	24R	JO DAVIESS	594	373
		CONTRACT NO. 64B40		

FED. ROAD DIST. NO. | ILLINOIS | FED. AID PROJECT

PLOT DATE = 10/6/2024

FIELD TILE JUNCTION VAULTS 2′ AND 3′ DIA.

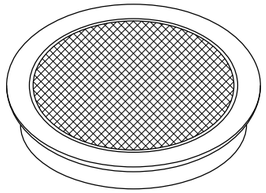

FRAME & LID FOR 2′ VAULT

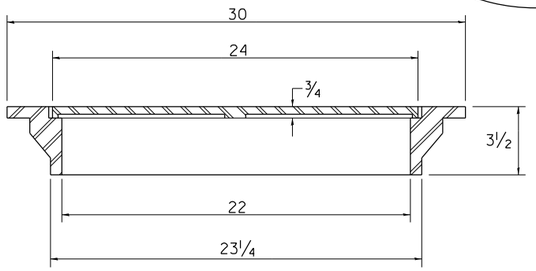

TOTAL WEIGHT: 146 LBS.

FRAME & LID FOR 3′ VAULT

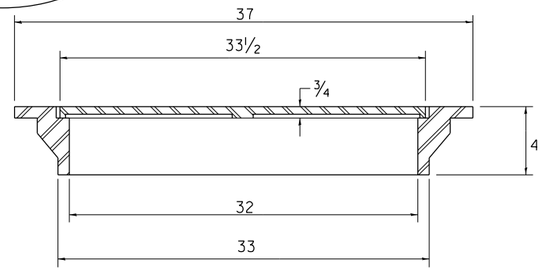

TOTAL WEIGHT: 280 LBS.

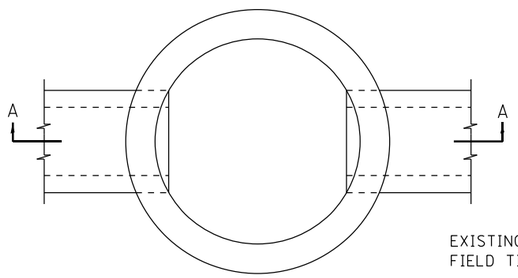

PLAN

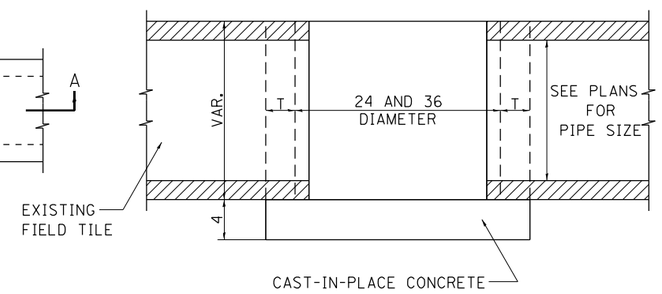

SECTION A-A

GENERAL NOTES:

THE FRAME AND LID IS REQUIRED ON ALL JUNCTION VAULTS.
THE FRAME AND LID SHALL BE INSTALLED FLUSH WITH THE GROUND.

FRAME AND LIDS:

R-6040 OR EQUIVALENT (2′)
R-6080 OR EQUIVALENT (3′)

ALTERNATE MATERIALS FOR WALLS	T
BRICK MASONRY	8
CAST-IN-PLACE CONCRETE	6
CONCRETE MASONRY UNIT	5
PRECAST REINFORCED CONCRETE SECTION	3

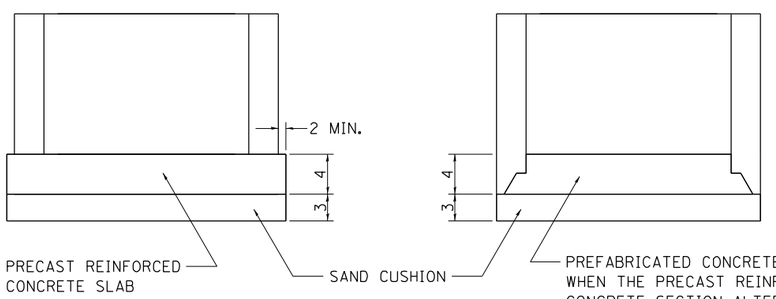

ALTERNATE METHODS

ALL DIMENSIONS ARE IN INCHES UNLESS OTHERWISE NOTED.

FIELD TILE JUNCTION VAULTS 2′ AND 3′ DIA. 30.2

TREATMENT OF FIELD TILE SYSTEMS UNDER DITCHES

PAVED DITCH

TO BE USED IF COVER OVER THE PIPE AT THE BOTTOM OF THE DITCH IS LESS THAN 10 inches

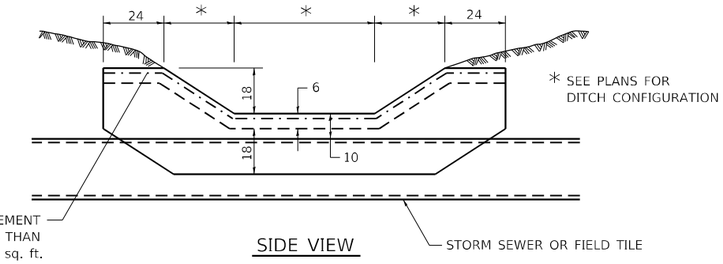

SIDE VIEW

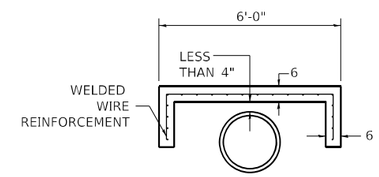

SECTION A-A

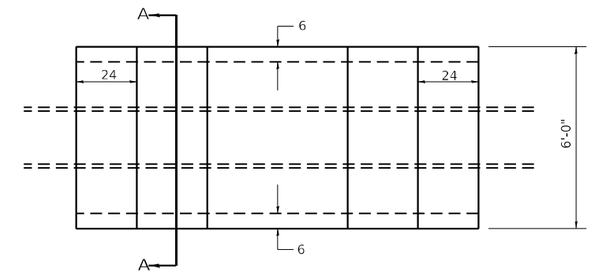

PLAN VIEW

CONCRETE SLAB

TO BE USED IF COVER OVER THE PIPE AT THE BOTTOM OF THE DITCH IS 10 INCHES TO 24 INCHES

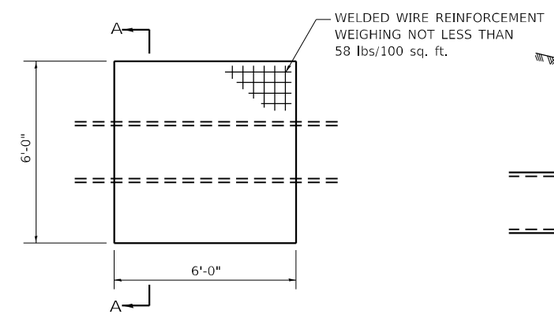

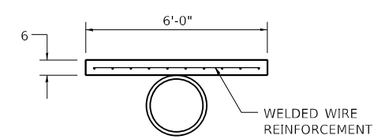

SECTION A-A

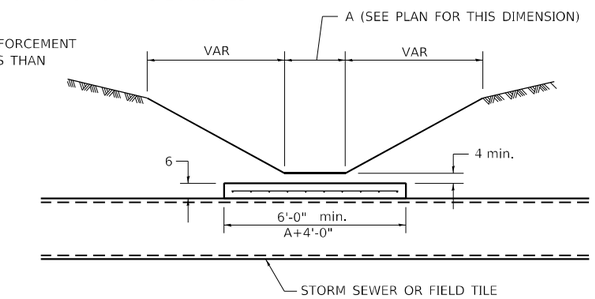

NOTES

THIS WORK SHALL BE DONE IN ACCORDANCE WITH ARTICLE 611.04 OF THE STANDARD SPECIFICATION.

THE CONCRETE SLAB AND PAVED DITCH WILL BE PAID FOR AT THE CONCRETE UNIT PRICE PER CUBIC YARD FOR MISCELLANEOUS CONCRETE.

ALL DIMENSIONS ARE IN INCHES UNLESS OTHERWISE NOTED.

REVISED - 1-05-16
REVISED - 10-14-11

TREATMENT OF FIELD TILE SYSTEMS UNDER DITCHES 31.2

USER NAME = $USER$	DESIGNED -	REVISED -	
	DRAWN -	REVISED -	
PLOT SCALE = $SCALE$	CHECKED -	REVISED -	
PLOT DATE = $DATE$	DATE -	REVISED -	

STATE OF ILLINOIS
DEPARTMENT OF TRANSPORTATION

REGION 2 / DISTRICT 2 STANDARD

SCALE: N/A | SHEET NO. 6 OF 29 SHEETS | STA. | TO STA.

F.A.P RTE.	SECTION	COUNTY	TOTAL SHEETS	SHEET NO.
301	24R	JO DAVIESS	594	374

CONTRACT NO. 64B40

ILLINOIS FED. AID PROJECT

PLOT DATE = $DATE$

UNDERDRAIN FOR ACROSS ROAD (AR) CULVERTS

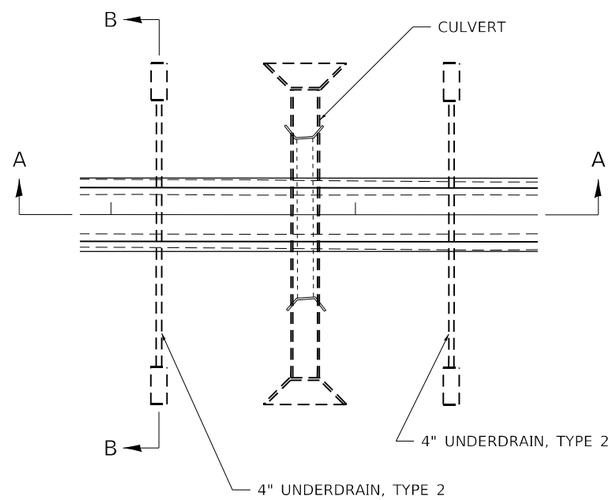

NOTES:

IN SAG CONDITIONS INSTALL PIPE UNDERDRAINS, TYPE 2, 4" ON BOTH SIDES OF CULVERT.

ON HIGHWAY GRADES GREATER THAN 2% INSTALL PIPE UNDERDRAINS, TYPE 2, 4" ON THE HIGH SIDE OF THE CULVERT.

THIS WORK SHALL BE COMPLETED ACCORDING TO SECTION 601 OF THE STANDARD SPECIFICATIONS.

THE UNDERDRAIN SHALL EXTEND UNTIL INTERSECTING WITH THE SIDE SLOPES. THE PIPES SHALL DRAIN INTO CONCRETE HEADWALLS. (SEE ARTICLE 601.05 OF THE STANDARD SPECIFICATIONS AND HIGHWAY STANDARD 601101).

THE UNDERDRAIN SHALL BE A MINIMUM OF 12" BELOW THE EXISTING PAVEMENT.

PIPE UNDERDRAINS WILL BE PAID FOR AT THE CONTRACT UNIT PRICE PER FOOT FOR PIPE UNDERDRAINS, TYPE 2, 4".

CONCRETE HEADWALLS WILL BE PAID FOR AT THE CONTRACT UNIT PRICE PER EACH FOR CONCRETE HEADWALLS FOR PIPE DRAINS.

A DELINEATOR SHALL BE PLACED AT EACH CONCRETE HEADWALL. THESE BE PAID FOR AT THE CONTRACT UNIT PRICE PER EACH FOR DELINEATORS.

SEC. A-A

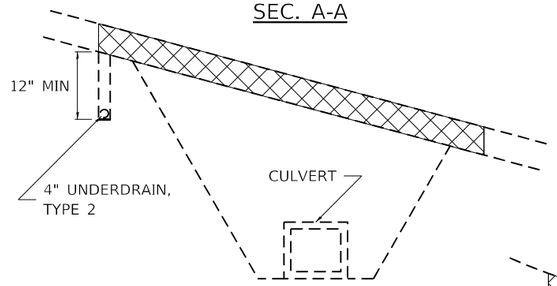

NOTES:
(HIGHWAY GRADE GREATER THAN 2%)

SEC. A-A

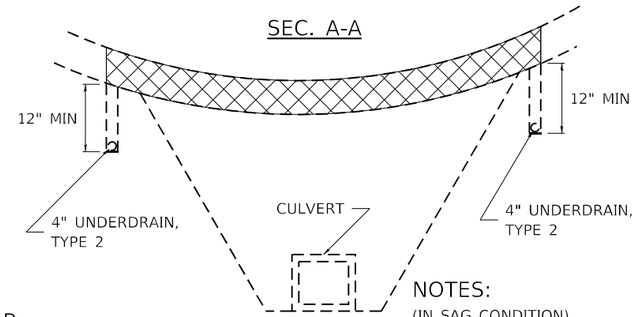

NOTES:
(IN SAG CONDITION)
(PIPE DRAIN ON EACH SIDE)

SEC. B-B

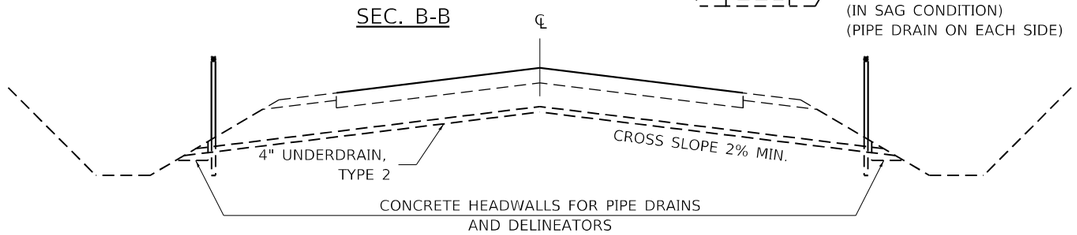

UNDERDRAIN FOR ACROSS ROAD (AR) CULVERTS 37.2

USER NAME = $USER$	DESIGNED -	REVISED -	
	DRAWN -	REVISED -	
PLOT SCALE = $SCALE$	CHECKED -	REVISED -	
PLOT DATE = $DATE$	DATE -	REVISED -	

STATE OF ILLINOIS
DEPARTMENT OF TRANSPORTATION

REGION 2 / DISTRICT 2 STANDARD

SCALE: N/A | SHEET NO. 7 OF 29 SHEETS | STA. | TO STA.

F.A.P RTE.	SECTION	COUNTY	TOTAL SHEETS	SHEET NO.
301	24R	JO DAVIESS	594	375
		CONTRACT NO. 64B40		
FED. ROAD DIST. NO.	ILLINOIS	FED. AID PROJECT		

PLOT DATE = $DATE$

SUPERELEVATION TRANSITION ON TWO–LANE HIGHWAY

W = LANE WIDTH
e = DESIGN SUPERELEVATION RATE

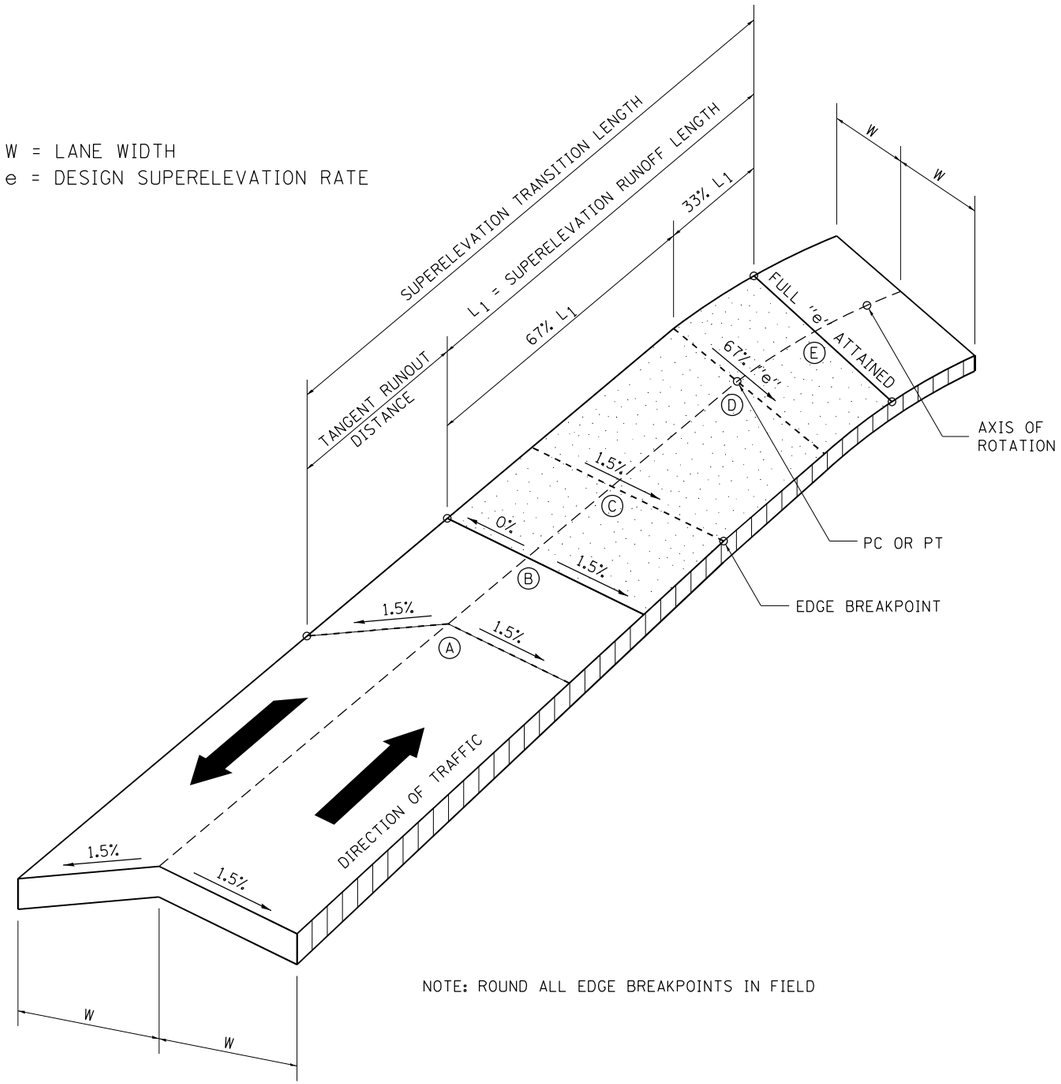

NOTE: ROUND ALL EDGE BREAKPOINTS IN FIELD

TRANSITION CURVE TABLE

CURVE PI STA.	SUPERELEVATION "e"	W	SUPERELEVATION TRANSITION LENGTH	TANGENT RUNOUT DISTANCE	SUPERELEVATION RUNOFF LENGTH
US 20 1978+27.99	6.0%	26	550	110	440
US 20 2132+90.60	5.3%	12	182	40	142
US 20 2153+41.54	3.4%	19	245	75	170
US 20 2178+96.27	5.1%	19	330	75	255
FRONTAGE 24+51.34	4.9%	12	111	26	85
FRONTAGE 27+09.63	4.9%	12	111	26	85

REVISED - 11-09-06

PLOT DATE = $DATE$

SUPERELEVATION TRANSITION ON TWO–LANE HIGHWAY 45.2

PERMANENT SURVEY MARKERS, TYPE II

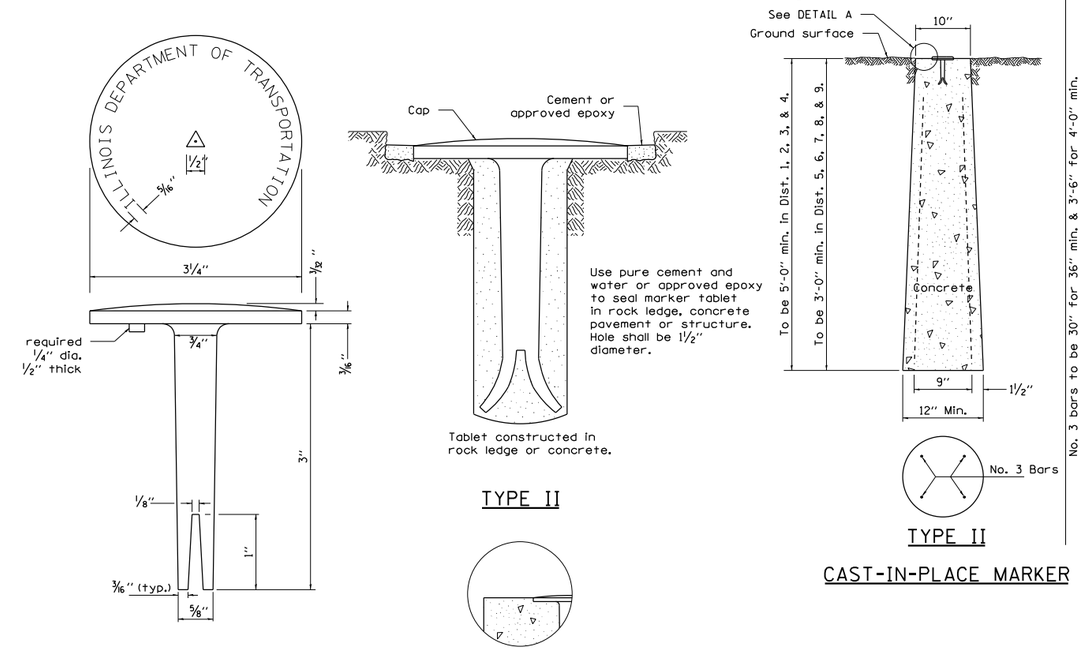

ALL DIMENSIONS ARE IN INCHES UNLESS OTHERWISE NOTED.

WITNESS MARKER FOR PERMANENT SURVEY MARKERS, TYPE II

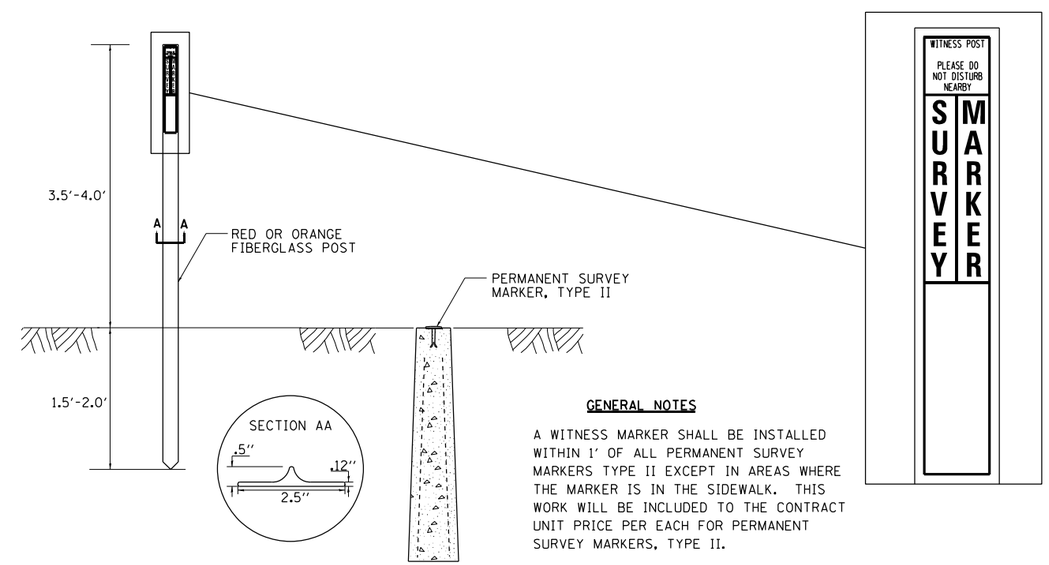

GENERAL NOTES

A WITNESS MARKER SHALL BE INSTALLED WITHIN 1' OF ALL PERMANENT SURVEY MARKERS TYPE II EXCEPT IN AREAS WHERE THE MARKER IS IN THE SIDEWALK. THIS WORK WILL BE INCLUDED TO THE CONTRACT UNIT PRICE PER EACH FOR PERMANENT SURVEY MARKERS, TYPE II.

PERMANENT SURVEY MARKERS, TYPE II 66.2

REVISED - 6-27-14	REGION 2 / DISTRICT 2 STANDARD	F.A.P RTE.	SECTION	COUNTY	TOTAL SHEETS	SHEET NO.
REVISED - 10-14-11		301	24R	JO DAVIESS	594	376
		CONTRACT NO. 64B40				
	SCALE: N/A SHEET NO. 8 OF 29 SHEETS STA. TO STA.	ILLINOIS FED. AID PROJECT				

TERMINATION OF DEAD END ROADS

NOTES: A "NO OUTLET" (36"x36" YELLOW) SIGN SHALL BE ERECTED SLIGHTLY BEYOND THE LAST ROAD INTERSECTING THE ROAD WITH NO OUTLET. IF THIS INTERSECTION IS MORE THAN 1500 FT FROM TERMINATION POINT, OR IF SIGHT DISTANCE TO THE CLOSURE IS LESS THAN 500 FT , A ROAD ENDS 500 FT (WB-I6) SIGN SHALL BE ERECTED 500 FT IN ADVANCE OF THE TERMINATION OF THE ROAD.

USE 4X6 WOOD POSTS INSTALLED IN ACCORDANCE WITH SECTION 730 OF STANDARD SPECIFICATIONS FOR TRAFFIC CONTROL ITEMS. USE APPLICABLE PARTS OF STANDARD 720001 FOR SIGN MOUNTING.

ALL DIMENSIONS ARE IN INCHES UNLESS OTHERWISE NOTED.

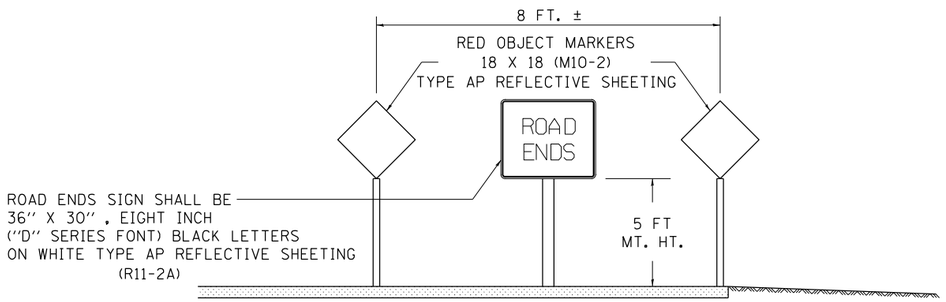

TERMINATION SIGNING

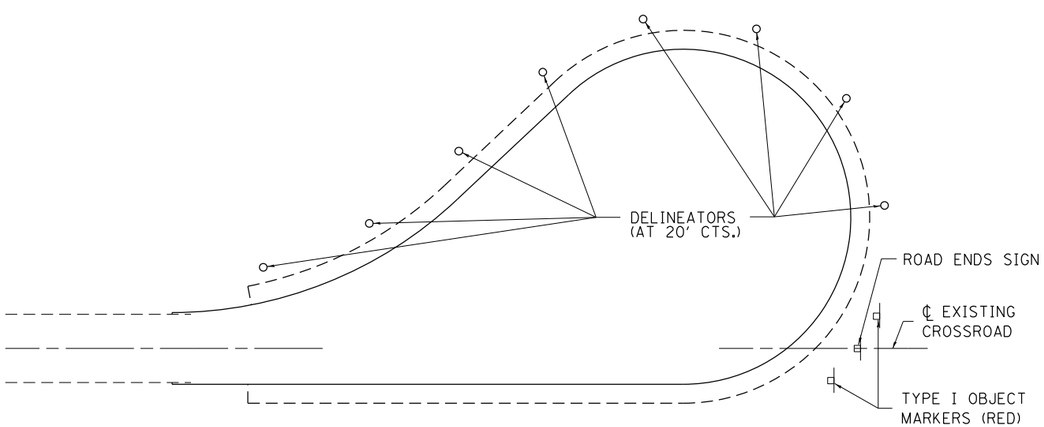

TRAFFIC CONTROL
TYPICAL CUL-DE-SAC

TERMINATION OF DEAD END ROADS 89.2

USER NAME = $USER$	DESIGNED -	REVISED -	STATE OF ILLINOIS DEPARTMENT OF TRANSPORTATION
	DRAWN -	REVISED -	
PLOT SCALE = $SCALE$	CHECKED -	REVISED -	
PLOT DATE = $DATE$	DATE -	REVISED -	

REGION 2 / DISTRICT 2 STANDARD

SCALE: N/A | SHEET NO. 9 OF 29 SHEETS | STA. TO STA.

F.A.P RTE.	SECTION	COUNTY	TOTAL SHEETS	SHEET NO.
301	24R	JO DAVIESS	594	377

CONTRACT NO. 64B40

ILLINOIS FED. AID PROJECT

PLOT DATE = $DATE$

CONCRETE END SECTIONS FOR PARALLEL PIPE CULVERTS 15" THRU 84" DIA.

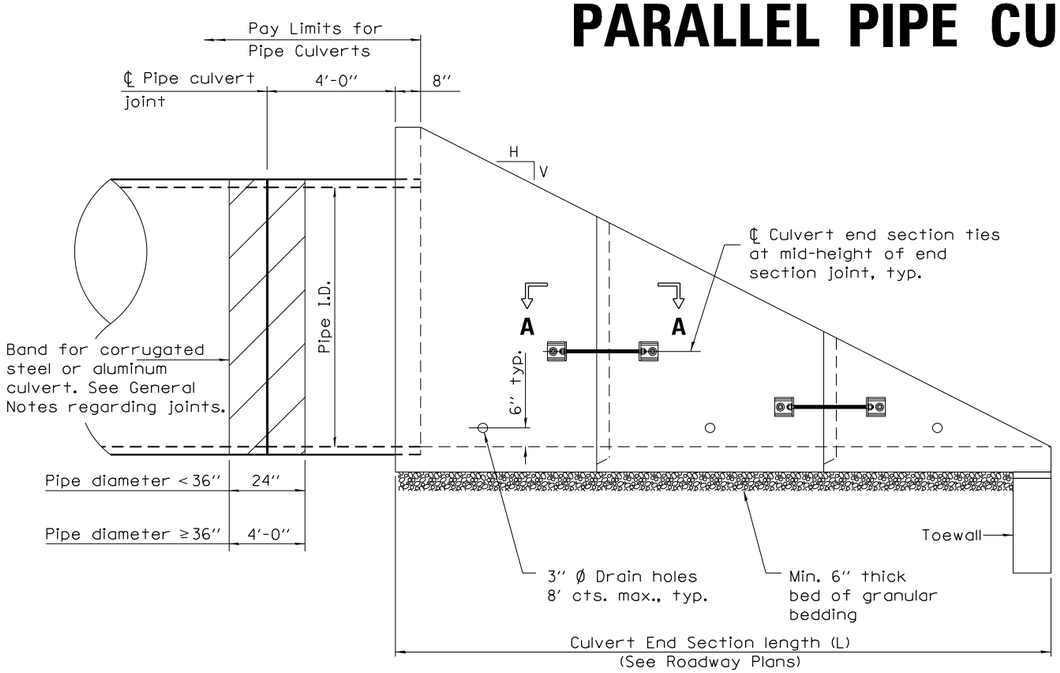

ELEVATION

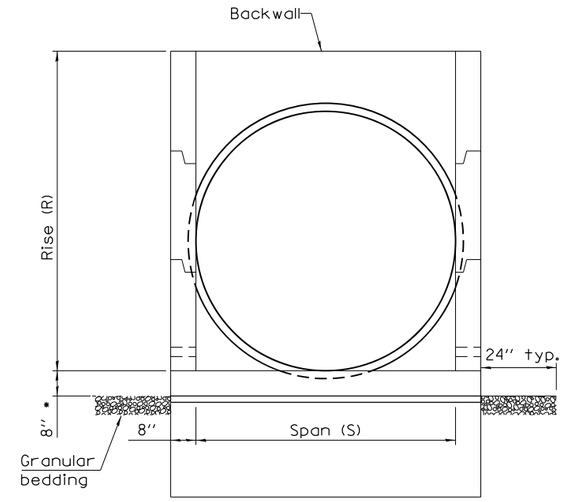

END VIEW

(Showing pipes)

* This dimension shall be increased by 1½" for CIP field construction. See General Notes.

GENERAL NOTES

The concrete end sections detailed herein for flexible type pipe culverts are restricted to use with parallel type drainage structures only and traversable pipe grating placed perpendicular to the sidewalls. When traversable pipe grating placed parallel to the sidewalls is required, use standard 542001 or 542011.

A segment of pipe culvert shall be cast into the backwall of the concrete end section such that a minimum of 4 ft of pipe culvert extends from the back face of the end section as shown in Elevation.

Segments of pipe culvert shall be joined in accordance with Article 542 of the Standard Specifications except bands for corrugated steel or aluminum culverts shall conform to the length requirements shown in elevation and have the same corrugations as the culvert pipe. These bands will be included in cost of the pipe.

The number of segments shown in elevation is for example only. The length and number of precast sections required to construct the end section shall be determined by the Contractor.

See roadway plans for slope (V:H) and pipe inside diameter.

2¼" x 2¼" x 5/16" plate washers shall be provided under each nut required for the anchor rods. Holes in the walls for the culvert tie assembly may be drilled using core bits in lieu of formed holes.

All slope ratios are expressed as units of verical dispacement to units of horizontal displacement (V:H).

All dimensions are in inches unless otherwise shown.

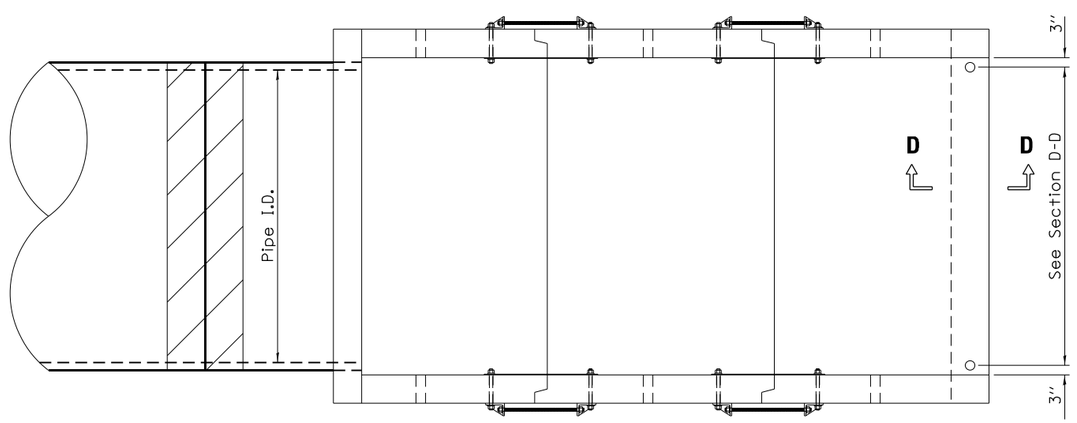

PLAN

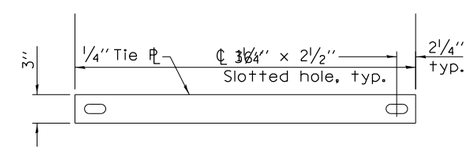

TIE PLATE DETAIL

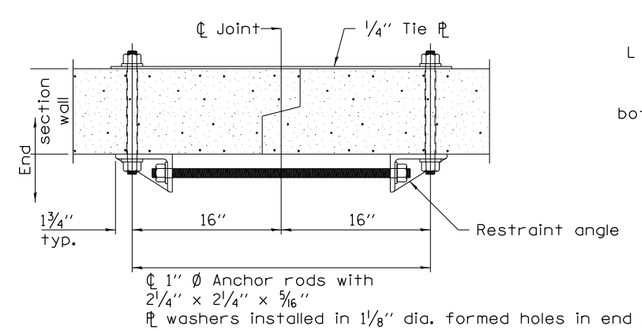

SECTION A–A

(Showing end section tie details)

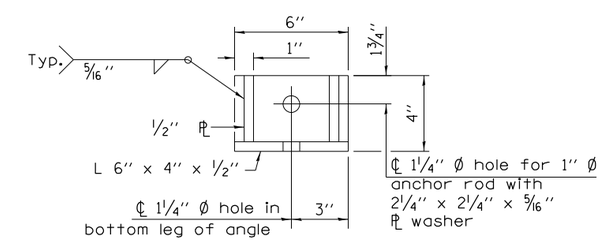

RESTRAINT ANGLE DETAIL

CONCRETE END SECTIONS FOR PARALLEL PIPE CULVERTS 15" THRU 84" DIA. SHEET 1 OF 3 11.1

USER NAME = $USER$	DESIGNED -	REVISED - 1-05-16	STATE OF ILLINOIS DEPARTMENT OF TRANSPORTATION
	DRAWN -	REVISED - 5-09-14	
PLOT SCALE = $SCALE$	CHECKED -	REVISED -	
PLOT DATE = $DATE$	DATE -	REVISED -	

REGION 2 / DISTRICT 2 STANDARD

SCALE: N/A | SHEET NO. 10 OF 29 SHEETS | STA. | TO STA.

F.A.P RTE.	SECTION	COUNTY	TOTAL SHEETS	SHEET NO.
301	24R	JO DAVIESS	594	378

CONTRACT NO. 64B40

ILLINOIS FED. AID PROJECT

CONCRETE END SECTIONS FOR PARALLEL PIPE CULVERTS 15" THRU 84" DIA.

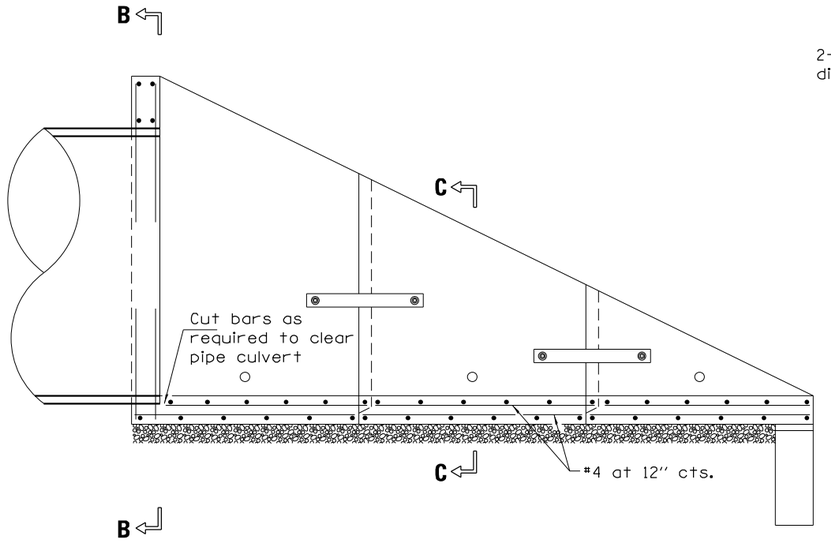

LONGITUDINAL SECTION

(Showing bottom slab and backwall reinforcement.)

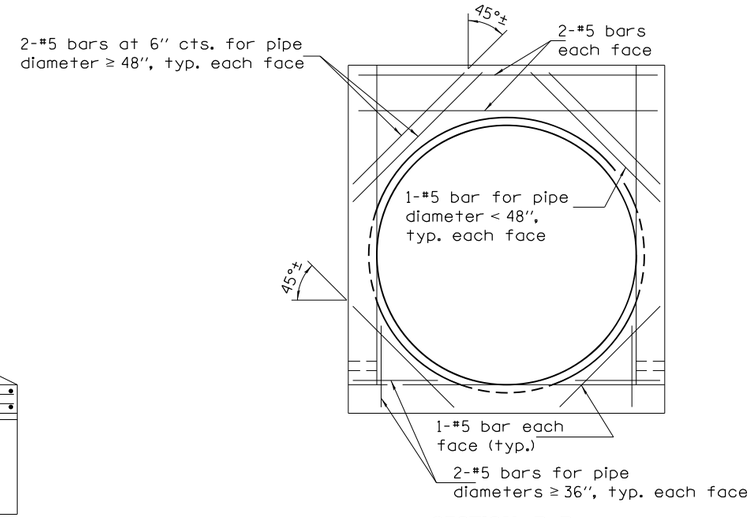

SECTION B–B

(Showing backwall reinforcement for pipes.)

LAP DIMENSION

#4 bar = 17"
#5 bar = 21"
#6 bar = 25"

• The Contractor may use lap splices for the sidewall reinforcement at the locations shown.

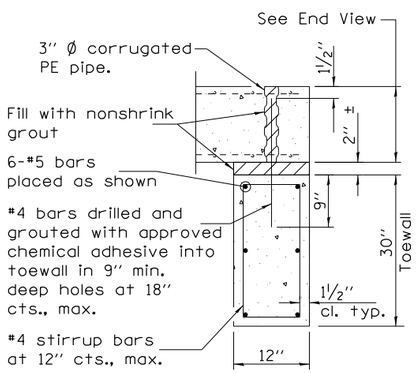

SECTION D–D

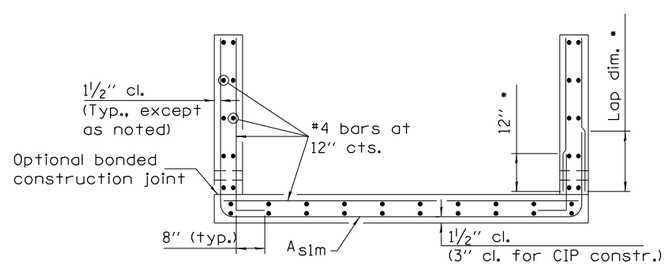

SECTION C–C

PARALLEL PIPE CULVERT END SECTION DIMENSIONS

Pipe I.D.	Tables IB, IC, IIIA, AND IIIB				
	R	S	L Slope of End Section 1:4	1:6	1:10
15"	25"	16"	9'-0"	13'-2"	21'-6"
18"	28"	18"	10'-0"	14'-8"	24'-0"
21"	31"	22"	11'-0"	16'-2"	26'-6"
24"	35"	24"	12'-4"	18'-2"	29'-10"
30"	3'-5"	30"	14'-4"	21'-2"	34'-10"
36"	3'-11"	36"	16'-4"	24'-2"	39'-10"
42"	4'-5"	3'-6"	18'-4"	27'-2"	44'-10"
48"	5'-0"	4'-0"	20'-8"	30'-8"	50'-8"
54"	5'-4"	4'-6"	22'-0"	32'-8"	54'-0"
60"	5'-10"	5'-0"	24'-0"	35'-8"	59'-0"
66"	6'-4"	5'-6"	26'-0"	38'-8"	64'-0"
72"	6'-10"	6'-0"	28'-0"	41'-8"	69'-0"
78"	7'-4"	6'-6"	30'-0"	44'-8"	74'-0"
84"	7'-10"	7'-0"	32'-0"	47'-8"	79'-0"

REINFORCEMENT SCHEDULE

PIPES		
Pipe I.D.	Asim Bar Size	Asim Bar Spacing
15"	#4	12"
18"	#4	12"
21"	#4	12"
24"	#4	12"
30"	#4	12"
36"	#4	12"
42"	#4	12"
48"	#4	8"
54"	#4	8"
60"	#5	8"
66"	#5	8"
72"	#5	8"
78"	#5	8"
84"	#6	8"

The above "Tables" are referenced from Article 542.03 of the Standard Specifications.

CONCRETE END SECTIONS FOR PARALLEL PIPE CULVERTS 15" THRU 84" DIA. SHEET 2 OF 3 11.1

USER NAME = $USER$	DESIGNED -	REVISED - 1-05-16	STATE OF ILLINOIS DEPARTMENT OF TRANSPORTATION
	DRAWN -	REVISED - 5-09-14	
PLOT SCALE = $SCALE$	CHECKED -	REVISED -	
PLOT DATE = $DATE$	DATE -	REVISED -	

REGION 2 / DISTRICT 2 STANDARD

SCALE: N/A | SHEET NO. 11 OF 29 SHEETS | STA. TO STA.

F.A.P RTE.	SECTION	COUNTY	TOTAL SHEETS	SHEET NO.
301	24R	JO DAVIESS	594	379

CONTRACT NO. 64B40

ILLINOIS FED. AID PROJECT

CONCRETE END SECTIONS FOR PARALLEL PIPE CULVERTS 15" THRU 84" DIA.

QUANTITIES

Pipe I.D.	Tables IB, IC, IIIA, AND IIIB								
	Concrete yd^3			Reinforcement without Lap lbs.			Reinforcement with Lap lbs.		
	Slope of End Section			Slope of End Section			Slope of End Section		
	1:4	1:6	1:10	1:4	1:6	1:10	1:4	1:6	1:10
15"	1.4	1.9	2.8	250	330	510	270	350	540
18"	1.6	2.2	3.4	290	400	600	310	420	640
21"	2.0	2.7	4.2	330	450	690	360	480	740
24"	2.3	3.2	5.0	370	510	790	400	550	850
30"	3.1	4.3	6.7	490	680	1060	520	720	1130
36"	3.9	5.5	8.7	580	810	1270	620	870	1360
42"	4.9	6.9	10.9	720	1020	1610	770	1080	1710
48"	6.0	8.6	13.7	940	1320	2090	1010	1420	2240
54"	6.9	9.8	15.7	1090	1540	2440	1160	1650	2610
60"	8.1	11.6	18.6	1410	2000	3190	1530	2180	3480
66"	9.5	13.6	21.8	1650	2360	3780	1780	2560	4100
72"	10.9	15.7	25.2	1840	2630	4220	1990	2850	4580
78"	12.4	17.9	28.9	2110	3040	4900	2280	3280	5290
84"	14.1	20.3	32.8	2710	3910	6320	2970	4290	6950

The above quantities are estimates and provided for information only. Actual quantities may vary depending upon the final layout of reinforcement and number of segments determined by the Contractor.

For cast-in-place construction, increase concrete volumes by approximately 12%.

TRAVERSABLE PIPE GRATE FOR PARALLEL DRAINAGE STRUCTURE

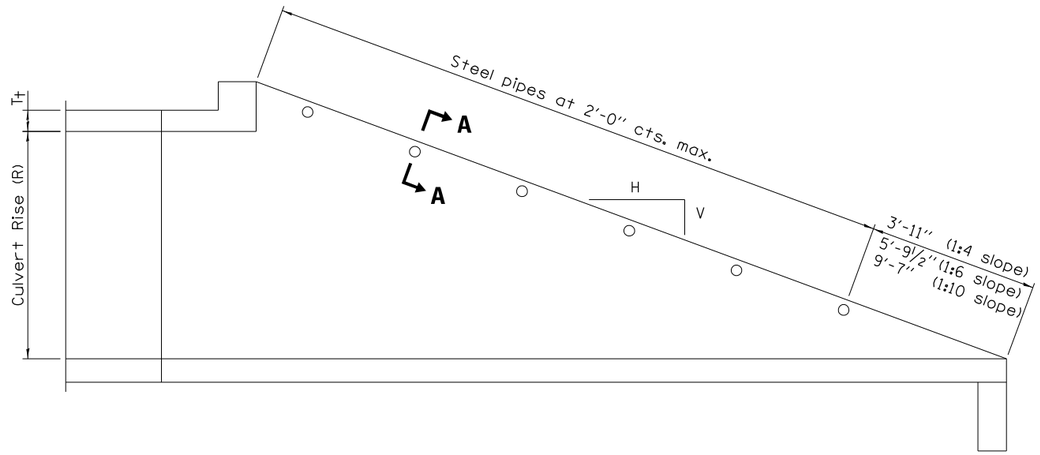

LONGITUDINAL SECTION

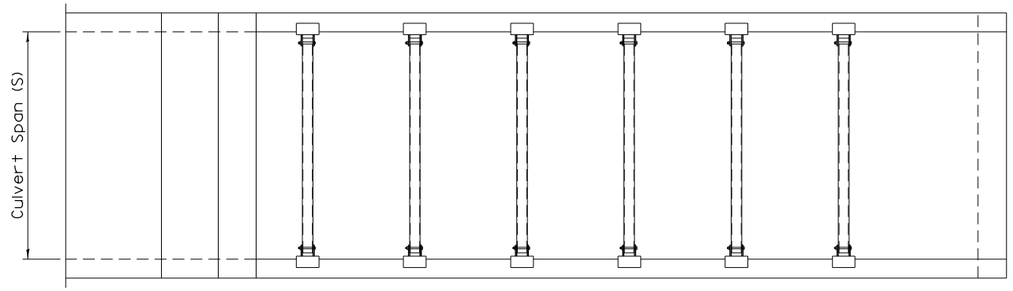

PLAN VIEW

GENERAL NOTES

The minimum edge distance from the center of a hole to the free edge of a structural shape or plate shall be 1½" unless noted otherwise.

This standard shall only be used on concrete end sections for parallel drainage structures.

The Contractor may install the thru bolts using drilling and grouting in lieu of providing a formed hole using steel pipe. Installation shall be in accordance with Article 509.06 using a method that results in the annulus surrounding the bolt being completely filled with adhesive. The method of drilling shall not result in spalled concrete at the exit face. Epoxy grouted thru bolts shall be snug tightened followed by an additional 1/3 turn on the interior nut at final installation. Cost included with Traversable Pipe Grate.

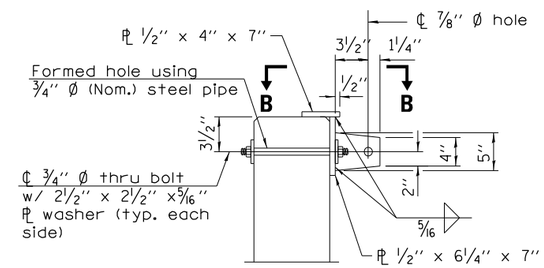

SECTION A–A

(4" Ø pipe not shown for clarity.)

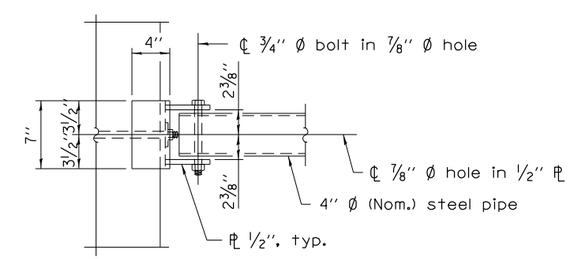

VIEW B–B

TRAVERSABLE PIPE GRATE FOR PARALLEL DRAINAGE STRUCTURE SHEET 1 OF 5 14.1

	USER NAME = $USER$	DESIGNED -	REVISED - 5-09-14	STATE OF ILLINOIS DEPARTMENT OF TRANSPORTATION	REGION 2 / DISTRICT 2 STANDARD	F.A.P RTE.	SECTION	COUNTY	TOTAL SHEETS / SHEET NO.
		DRAWN -	REVISED -			301	24R	JO DAVIESS	594 / 381
	PLOT SCALE = $SCALE$	CHECKED -	REVISED -					CONTRACT NO. 64B40	
	PLOT DATE = $DATE$	DATE -	REVISED -		SCALE: N/A / SHEET NO. 13 OF 29 SHEETS / STA. TO STA.		ILLINOIS	FED. AID PROJECT	

TRAVERSABLE PIPE GRATE FOR PARALLEL DRAINAGE STRUCTURE

PIPE GRATE SCHEDULE FOR PARALLEL BOX CULVERTS

(<2 FT COVER)

BOX SIZE		SLOPE OF END SECTION					
		1:4		1:6		1:10	
SPAN (FT.)	RISE (FT.)	Pipes No. / Length	Total Length of Pipe	Pipes No. / Length	Total Length of Pipe	Pipes No. / Length	Total Length of Pipe
3	2	5 @ 2'-7"	12'-11"	8 @ 2'-7"	20'-8"	12 @ 2'-7"	31'-0"
3	3	7 @ 2'-7"	18'-1"	11 @ 2'-7"	28'-5"	17 @ 2'-7"	43'-11"
4	2	5 @ 3'-7"	17'-11"	8 @ 3'-7"	28'-8"	13 @ 3'-7"	46'-7"
4	3	8 @ 3'-7"	28'-8"	11 @ 3'-7"	39'-5"	18 @ 3'-7"	64'-6"
4	4	10 @ 3'-7"	35'-10"	14 @ 3'-7"	50'-2"	23 @ 3'-7"	82'-5"
5	2	6 @ 4'-7"	27'-6"	8 @ 4'-7"	36'-8"	13 @ 4'-7"	59'-7"
5	3	8 @ 4'-7"	36'-8"	11 @ 4'-7"	50'-5"	18 @ 4'-7"	82'-6"
5	4	10 @ 4'-7"	45'-10"	14 @ 4'-7"	64'-2"	23 @ 4'-7"	105'-5"
5	5	12 @ 4'-7"	55'-0"	17 @ 4'-7"	77'-11"	28 @ 4'-7"	128'-4"
6	2	6 @ 5'-7"	33'-6"	8 @ 5'-7"	44'-8"	13 @ 5'-7"	72'-7"
6	3	8 @ 5'-7"	44'-8"	11 @ 5'-7"	61'-5"	18 @ 5'-7"	100'-6"
6	4	10 @ 5'-7"	55'-10"	14 @ 5'-7"	78'-2"	23 @ 5'-7"	128'-5"
6	5	12 @ 5'-7"	67'-0"	17 @ 5'-7"	94'-11"	28 @ 5'-7"	156'-4"
6	6	14 @ 5'-7"	78'-2"	20 @ 5'-7"	111'-8"	33 @ 5'-7"	184'-3"
7	2	6 @ 6'-7"	39'-6"	8 @ 6'-7"	52'-8"	13 @ 6'-7"	85'-7"
7	3	8 @ 6'-7"	52'-8"	11 @ 6'-7"	72'-5"	18 @ 6'-7"	118'-6"
7	4	10 @ 6'-7"	65'-10"	14 @ 6'-7"	92'-2"	23 @ 6'-7"	151'-5"
7	5	12 @ 6'-7"	79'-0"	17 @ 6'-7"	111'-11"	28 @ 6'-7"	184'-4"
7	6	14 @ 6'-7"	92'-2"	20 @ 6'-7"	131'-8"	33 @ 6'-7"	217'-3"
7	7	16 @ 6'-7"	105'-4"	23 @ 6'-7"	151'-5'	38 @ 6'-7"	250'-2"
8	2	6 @ 7'-7"	45'-6"	8 @ 7'-7"	60'-8"	13 @ 7'-7"	98'-7"
8	3	8 @ 7'-7"	60'-8"	11 @ 7'-7"	83'-5"	18 @ 7'-7"	136'-6"
8	4	10 @ 7'-7"	75'-10"	14 @ 7'-7"	106'-2"	23 @ 7'-7"	174'-5"
8	5	12 @ 7'-7"	91'-0"	17 @ 7'-7"	128'-11"	28 @ 7'-7"	212'-4"
8	6	14 @ 7'-7"	106'-2"	20 @ 7'-7"	151'-8"	33 @ 7'-7"	250'-3"
8	7	16 @ 7'-7"	121'-4"	23 @ 7'-7"	174'-5"	38 @ 7'-7"	288'-2"
8	8	18 @ 7'-7"	136'-6"	26 @ 7'-7"	197'-2"	43 @ 7'-7"	326'-1"
9	2	6 @ 8'-7"	51'-6"	8 @ 8'-7"	68'-8"	13 @ 8'-7"	111'-7"
9	3	8 @ 8'-7"	68'-8"	11 @ 8'-7"	94'-5"	18 @ 8'-7"	154'-6'
9	4	10 @ 8'-7"	85'-10"	14 @ 8'-7"	120'-2"	23 @ 8'-7"	197'-5"
9	5	12 @ 8'-7"	103'-0"	17 @ 8'-7"	145'-11"	28 @ 8'-7"	240'-4"
9	6	14 @ 8'-7"	120'-2"	20 @ 8'-7"	171'-8"	33 @ 8'-7"	283'-3"
9	7	16 @ 8'-7"	137'-4"	23 @ 8'-7"	197'-5"	38 @ 8'-7"	326'-2"
9	8	18 @ 8'-7"	154'-6"	26 @ 8'-7"	223'-2"	43 @ 8'-7"	369'-1"
9	9	20 @ 8'-7"	171'-8"	30 @ 8'-7"	257'-6"	48 @ 8'-7"	412'-0"
10	2	6 @ 9'-7"	57'-6"	9 @ 9'-7"	86'-3"	14 @ 9'-7"	134'-2"
10	3	8 @ 9'-7"	76'-8"	12 @ 9'-7"	115'-0"	19 @ 9'-7"	182'-1"
10	4	10 @ 9'-7"	95'-10"	15 @ 9'-7"	143'-9"	24 @ 9'-7"	230'-0"
10	5	12 @ 9'-7"	115'-0"	18 @ 9'-7"	172'-6"	29 @ 9'-7"	277'-11"
10	6	14 @ 9'-7"	134'-2"	21 @ 9'-7"	201'-3"	34 @ 9'-7"	325'-10"
10	7	16 @ 9'-7"	153'-4"	24 @ 9'-7"	230'-0"	39 @ 9'-7"	373'-9"
10	8	18 @ 9'-7"	172'-6"	27 @ 9'-7"	258'-9"	44 @ 9'-7"	421'-8"
10	9	20 @ 9'-7"	191'-8"	30 @ 9'-7"	287'-5"	49 @ 9'-7"	469'-7"
10	10	22 @ 9'-7"	210'-10"	33 @ 9'-7"	316'-3"	54 @ 9'-7"	517'-6"

PIPE GRATE SCHEDULE FOR PARALLEL BOX CULVERTS

(<2 FT COVER)

BOX SIZE		SLOPE OF END SECTION					
		1:4		1:6		1:10	
SPAN (FT.)	RISE (FT.)	Pipes No. / Length	Total Length of Pipe	Pipes No. / Length	Total Length of Pipe	Pipes No. / Length	Total Length of Pipe
11	2	6 @ 10'-7"	63'-6"	9 @ 10'-7"	95'-3"	14 @ 10'-7"	148'-2"
11	3	8 @ 10'-7"	84'-8"	12 @ 10'-7"	127'-0"	19 @ 10'-7"	201'-1"
11	4	10 @ 10'-7"	105'-10"	15 @ 10'-7"	158'-9"	24 @ 10'-7"	254'-0"
11	6	14 @ 10'-7"	148'-2"	21 @ 10'-7"	222'-3"	34 @ 10'-7"	359'-10"
11	8	18 @ 10'-7"	190'-6"	27 @ 10'-7"	285'-9"	44 @ 10'-7"	465'-8"
11	10	23 @ 10'-7"	243'-5"	33 @ 10'-7"	349'-3"	54 @ 10'-7"	571'-6"
11	11	25 @ 10'-7"	264'-7"	36 @ 10'-7"	381'-0"	59 @ 10'-7"	624'-5"
12	2	6 @ 11'-7"	69'-6"	9 @ 11'-7"	104'-3"	15 @ 11'-7"	173'-9"
12	3	8 @ 11'-7"	92'-8"	12 @ 11'-7"	139'-0"	20 @ 11'-7"	231'-8"
12	4	10 @ 11'-7"	115'-10"	15 @ 11'-7"	173'-9"	25 @ 11'-7"	289'-7"
12	6	15 @ 11'-7"	173'-9"	21 @ 11'-7"	243'-3"	35 @ 11'-7"	405'-5"
12	8	19 @ 11'-7"	220'-1"	27 @ 11'-7"	312'-9"	45 @ 11'-7"	521'-3"
12	10	23 @ 11'-7"	266'-5"	33 @ 11'-7"	382'-3"	55 @ 11'-7"	637'-1"
12	12	27 @ 11'-7"	312'-9"	39 @ 11'-7"	451'-9"	65 @ 11'-7"	752'-11"

PIPE GRATE SCHEDULE FOR PARALLEL BOX CULVERTS

(>2 FT COVER)

BOX SIZE		SLOPE OF END SECTION					
		1:4		1:6		1:10	
SPAN (FT.)	RISE (FT.)	Pipes No. / Length	Total Length of Pipe	Pipes No. / Length	Total Length of Pipe	Pipes No. / Length	Total Length of Pipe
3	2	5 @ 2'-7"	12'-11"	7 @ 2'-7"	18'-1"	11 @ 2'-7"	28'-5"
3	3	7 @ 2'-7"	18'-1"	10 @ 2'-7"	25'-10"	16 @ 2'-7"	41'-4"
4	2	5 @ 3'-7"	17'-11"	7 @ 3'-7"	25'-1"	12 @ 3'-7"	43'-0"
4	3	7 @ 3'-7"	25'-1"	10 @ 3'-7"	35'-10"	17 @ 3'-7"	60'-11"
4	4	9 @ 3'-7"	32'-3"	13 @ 3'-7"	46'-7"	22 @ 3'-7"	78'-10"
5	2	5 @ 4'-7"	22'-11"	7 @ 4'-7"	32'-1"	12 @ 4'-7"	55'-0"
5	3	7 @ 4'-7"	32'-1"	11 @ 4'-7"	50'-5"	17 @ 4'-7"	77'-11"
5	4	9 @ 4'-7"	41'-3"	14 @ 4'-7"	64'-2"	22 @ 4'-7"	100'-10"
5	5	11 @ 4'-7"	50'-5"	17 @ 4'-7"	77'-11"	27 @ 4'-7"	123'-9"
6	2	5 @ 5'-7"	27'-11"	8 @ 5'-7"	44'-8"	12 @ 5'-7"	67'-0"
6	3	7 @ 5'-7"	39'-1"	11 @ 5'-7"	61'-5"	17 @ 5'-7"	94'-11"
6	4	10 @ 5'-7"	55'-10"	14 @ 5'-7"	78'-2"	23 @ 5'-7"	128'-5"
6	5	12 @ 5'-7"	67'-0"	17 @ 5'-7"	94'-11"	28 @ 5'-7"	156'-4"
6	6	14 @ 5'-7"	78'-2"	20 @ 5'-7"	111'-8"	33 @ 5'-7"	184'-3"

Follow (<2 FT Cover) table for all other sizes

TRAVERSABLE PIPE GRATE FOR PARALLEL DRAINAGE STRUCTURE

PIPE GRATE SCHEDULE FOR PARALLEL PIPE CULVERTS 15" THRU 84" DIA.

Pipe I.D.	SLOPE OF END SECTION					
	1:4		1:6		1:10	
	Pipes No. / Length	Total Length of Pipe	Pipes No. / Length	Total Length of Pipe	Pipes No. / Length	Total Length of Pipe
15''	3 @ 0'-11''	2'-9''	4 @ 0'-11''	3'-8''	6 @ 0'-11''	5'-6''
18''	3 @ 1'-1''	3'-3''	5 @ 1'-1''	5'-5''	7 @ 1'-1''	7'-7''
21''	4 @ 1'-5''	5'-8''	5 @ 1'-5''	7'-1''	9 @ 1'-5''	12'-9''
24''	5 @ 1'-7''	7'-11''	6 @ 1'-7''	9'-6''	10 @ 1'-7''	15'-10''
30''	6 @ 2'-1''	12'-6''	8 @ 2'-1''	16'-8''	13 @ 2'-1''	27'-1''
36''	7 @ 2'-7''	18'-1''	10 @ 2'-7''	25'-10''	15 @ 2'-7''	38'-9''
42''	8 @ 3'-1''	24'-8''	11 @ 3'-1''	33'-11''	18 @ 3'-1''	55'-6''
48''	9 @ 3'-7''	32'-3''	13 @ 3'-7''	46'-7''	21 @ 3'-7''	75'-3''
54''	10 @ 4'-1''	40'-10''	14 @ 4'-1''	57'-2''	23 @ 4'-1''	93'-11''
60''	11 @ 4'-7''	50'-5''	15 @ 4'-7''	68'-9''	25 @ 4'-7''	114'-7''
66''	12 @ 5'-1''	61'-0''	17 @ 5'-1''	86'-5''	28 @ 5'-1''	142'-4''
72''	13 @ 5'-7''	72'-7''	18 @ 5'-7''	100'-6''	30 @ 5'-7''	167'-6''
78''	14 @ 6'-1''	85'-2''	20 @ 6'-1''	121'-8''	33 @ 6'-1''	200'-9''
84''	15 @ 6'-7''	98'-9''	21 @ 6'-7''	138'-3''	35 @ 6'-7''	230'-5''

TRAVERSABLE PIPE GRATE FOR PARALLEL DRAINAGE STRUCTURE

PIPE GRATE SCHEDULE FOR PARALLEL PIPE ARCH CULVERTS 15" THRU 84" DIA.

SLOPE OF END SECTION						
Pipe I.D.	Table IIA, Corrugation : 2⅔" x ½"					
	1:4		1:6		1:10	
	Pipes No. / Length	Total Length of Pipe	Pipes No. / Length	Total Length of Pipe	Pipes No. / Length	Total Length of Pipe
15"	2 @ 1'-1"	2'-2"	3 @ 1'-1"	3'-3"	5 @ 1'-1"	5'-5"
18"	3 @ 1'-5"	4'-3"	4 @ 1'-5"	5'-8"	6 @ 1-5"	8'-6"
21"	3 @ 1'-7"	4'-9"	5 @ 1'-7"	7'-11"	7 @ 1'-7"	11'-1"
24"	4 @ 1'-11"	7'-8"	5 @ 1'-11"	9'-7"	8 @ 1'-11"	15'-4"
30"	4 @ 2'-7"	10'-4"	6 @ 2'-7"	15'-6"	10 @ 2'-7"	25'-10"
36"	5 @ 3'-1"	15'-5"	7 @ 3'-1"	21'-7"	12 @ 3'-1"	37'-0"
42"	6 @ 3'-9"	22'-6"	9 @ 3'-9"	33'-9"	14 @ 3'-9"	52'-6"
48"	7 @ 4'-5"	30'-11"	10 @ 4'-5"	44'-2"	16 @ 4'-5"	70'-8"
54"	8 @ 4'-11"	39'-4"	11 @ 4'-11"	54'-1"	18 @ 4'-11"	88'-6"
60"	8 @ 5'-7"	44'-8"	12 @ 5'-7"	67'-0"	20 @ 5'-7"	111'-8"
66"	9 @ 6'-1"	54'-9"	13 @ 6'-1"	79'-1"	22 @ 6'-1"	133'-10"
72"	10 @ 6'-7"	65'-10"	15 @ 6'-7"	98'-9"	24 @ 6'-7"	158'-0"
78"	-	-	-	-	-	-
84"	-	-	-	-	-	-

PIPE GRATE SCHEDULE FOR PARALLEL PIPE ARCH CULVERTS 15" THRU 84" DIA.

SLOPE OF END SECTION						
Pipe I.D.	Table IIA, Corrugation : 3" x 1"					
	1:4		1:6		1:10	
	Pipes No. / Length	Total Length of Pipe	Pipes No. / Length	Total Length of Pipe	Pipes No. / Length	Total Length of Pipe
15"	-	-	-	-	-	-
18"	-	-	-	-	-	-
21"	-	-	-	-	-	-
24"	-	-	-	-	-	-
30"	-	-	-	-	-	-
36"	6 @ 2'-11"	17'-6"	8 @ 2'-11"	23'-4"	13 @ 2'-11"	37'-11"
42"	7 @ 3'-5"	23'-11"	10 @ 3'-5"	34'-2"	15 @ 3'-5"	51'-3"
48"	8 @ 4'-1"	32'-8"	11 @ 4'-1"	44'-11"	18 @ 4'-1"	73'-6"
54"	9 @ 4'-7"	41'-3"	12 @ 4'-7"	55'-0"	20 @ 4'-7"	91'-10"
60"	9 @ 5'-1"	45'-9"	14 @ 5'-1"	71'-2"	22 @ 5'-1"	111'-10"
66"	10 @ 5'-9"	57'-6"	15 @ 5'-9"	86'-3"	24 @ 5'-9"	138'-0"
72"	11 @ 6'-5"	70'-7"	16 @ 6'-5"	102'-8"	26 @ 6'-5"	166'-10"
78"	12 @ 6'-11"	83'-0"	17 @ 6'-11"	117'-7"	28 @ 6'-11"	193'-8"
84"	12 @ 7'-7"	91'-0"	18 @ 7'-7"	136'-6"	30 @ 7'-7"	227'-6"

TRAVERSABLE PIPE GRATE FOR PARALLEL DRAINAGE STRUCTURE

PIPE GRATE SCHEDULE FOR PARALLEL ELLIPTICAL PIPE CULVERTS 15" THRU 72" DIA.

Pipe I.D.	SLOPE OF END SECTION					
	1:4		1:6		1:10	
	Pipes No. / Length	Total Length of Pipe	Pipes No. / Length	Total Length of Pipe	Pipes No. / Length	Total Length of Pipe
15''	3 @ 2'-7''	7'-9''	5 @ 2'-7''	12'-11''	7 @ 2'-7''	18'-1''
18''	3 @ 2'-7''	7'-9''	5 @ 2'-7''	12'-11''	7 @ 2'-7''	18'-1''
21''	5 @ 3'-3''	16'-3''	7 @ 3'-3''	22'-9''	12 @ 3'-3''	39'-0''
24''	5 @ 3'-3''	16'-3''	7 @ 3'-3''	22'-9''	12 @ 3'-3''	39'-0''
27''	6 @ 3'-7''	21'-6''	8 @ 3'-7''	28'-8''	13 @ 3'-7''	46'-7''
30''	6 @ 3'-11''	23'-6''	9 @ 3'-11''	35'-3''	14 @ 3'-11''	54'-10''
36''	7 @ 4'-7''	32'-1''	10 @ 4'-7''	45'-10''	16 @ 4'-7''	73'-4''
42''	8 @ 5'-5''	43'-4''	11 @ 5'-5''	59'-7''	18 @ 5'-5''	97'-6''
48''	9 @ 6'-1''	54'-9''	13 @ 6'-1''	79'-1''	20 @ 6'-1''	121'-8''
54''	10 @ 6'-9''	67'-6''	14 @ 6'-9''	94'-6''	23 @ 6'-9''	155'-3''
60''	11 @ 7'-7''	83'-5''	15 @ 7'-7''	113'-9''	25 @ 7'-7''	189'-7''
66''	11 @ 8'-3''	90'-9''	17 @ 8'-3''	140'-3''	27 @ 8'-3''	222'-9''
72''	12 @ 8'-11''	107'-0''	18 @ 8'-11''	160'-6''	30 @ 8'-11''	267'-6''

HOT–MIX ASPHALT APPROACHES AND MAILBOX RETURNS

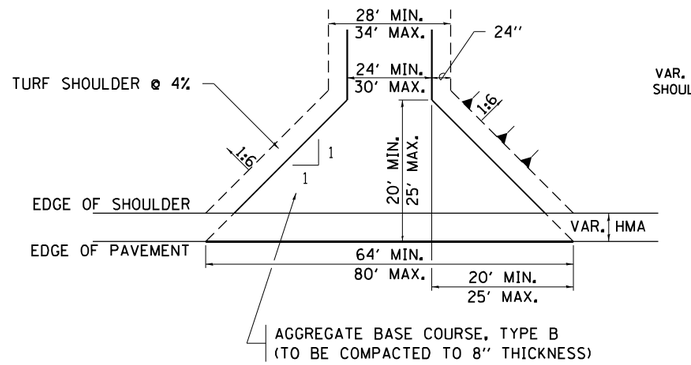

FIELD ENTRANCE

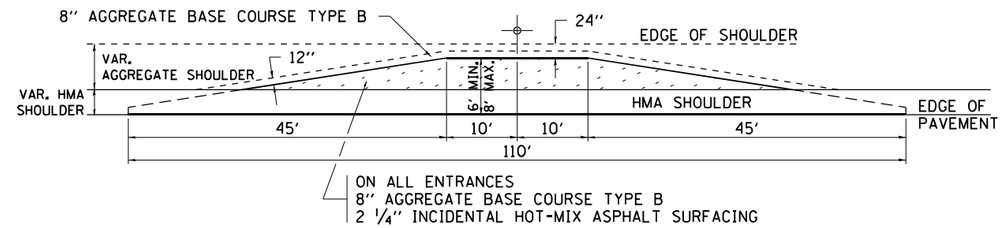

MAILBOX TURNOUT

NOTE

1. TURNOUTS ARE TO BE CONSTRUCTED ON THE APPROACH SIDE OF ALL PE & CE REGARDLESS IF A MAILBOX IS PRESENT.
2. ALL PE & CE ARE TO BE SURFACED TO RIGHT OF WAY LINE. AREA BEHIND RIGHT OF WAY SHALL MATCH EXISTING SURFACE.
3. ALL PE & CE TO BE CONSTRUCTED WITH AN 8'' AGGREGATE BASE COURSE, TYPE B AND WITH A 2 1/4'' INCIDENTAL HOT-MIX ASPHALT SURFACING, UNLESS OTHERWISE NOTED.
4. FE ARE TO BE AGGREGATE TO RIGHT OF WAY OR TOUCH DOWN, WHICH EVER IS GREATEST.
5. EXCAVATION REQUIRED FOR PLACEMENT OF AGGREGATE BASE COURSE SHALL BE INCLUDED IN THE COST OF THE AGGREGATE BASE COURSE.
6. ON ENTRANCES THE CONTRACTOR HAS THE OPTION OF USING RADIUS RETURNS. USE RADII OF 20' TO 60'.
7. SIDE ROADS SHALL HAVE 3'' INCIDENTAL PLACED IN TWO 1 1/2'' LIFTS.

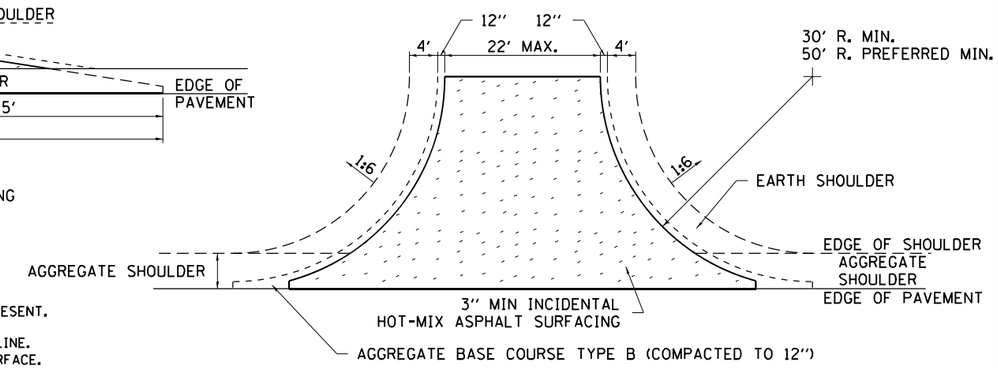

SIDE ROAD RETURN/EARTH SHOULDER

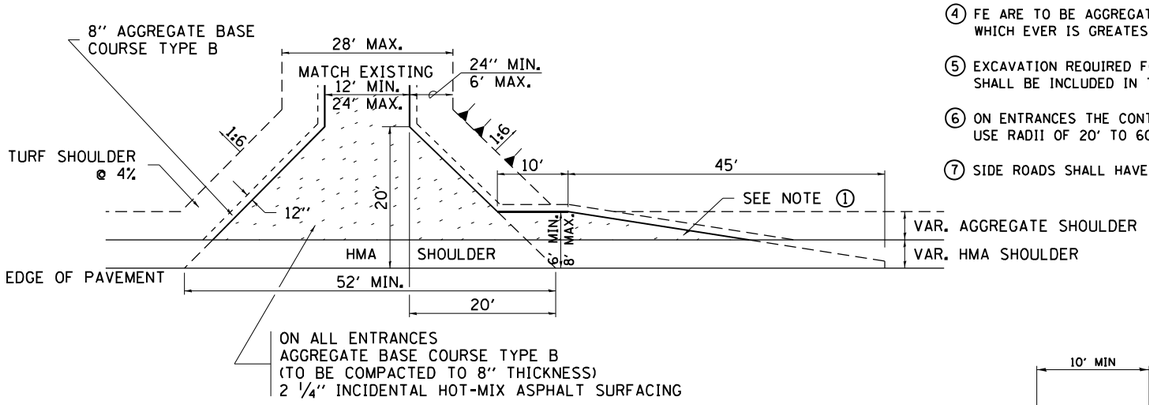

PRIVATE ENTRANCE

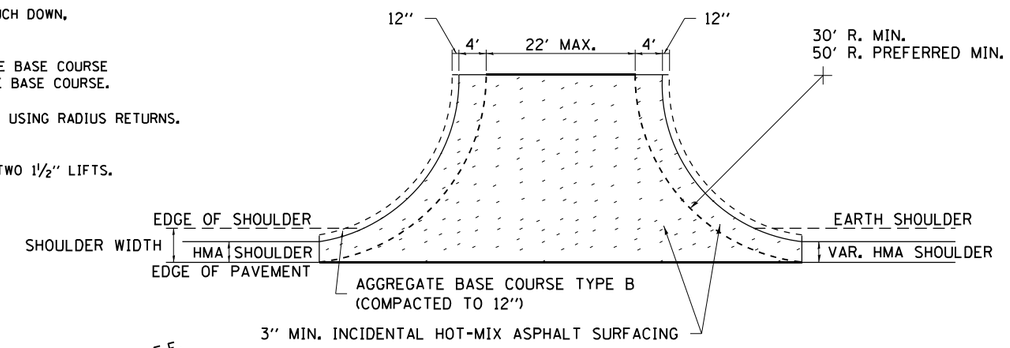

SIDE ROAD RETURN/HMA SHOULDER

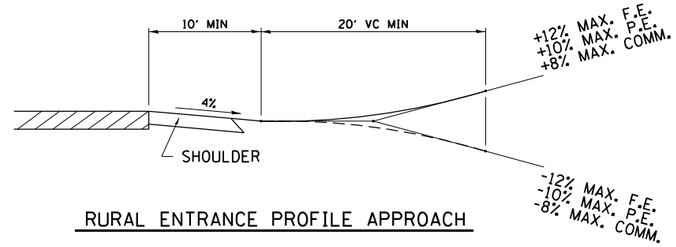

RURAL ENTRANCE PROFILE APPROACH

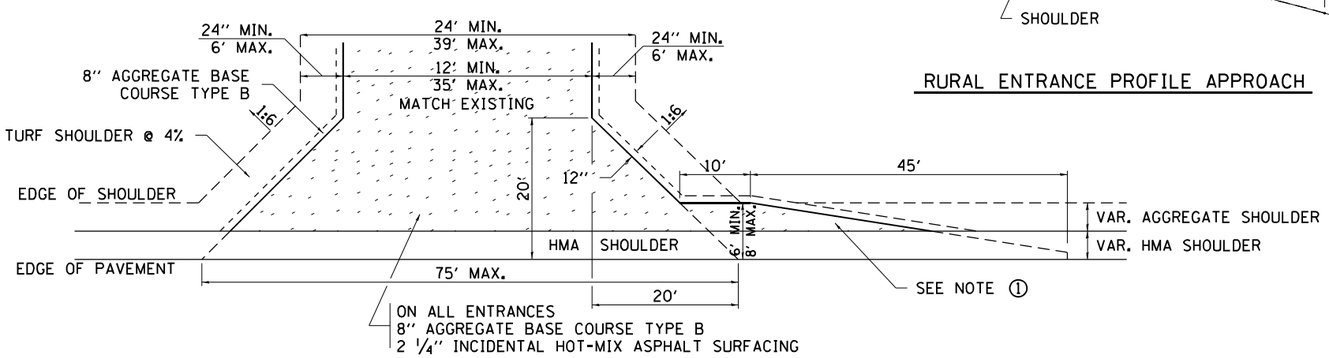

COMMERCIAL ENTRANCE

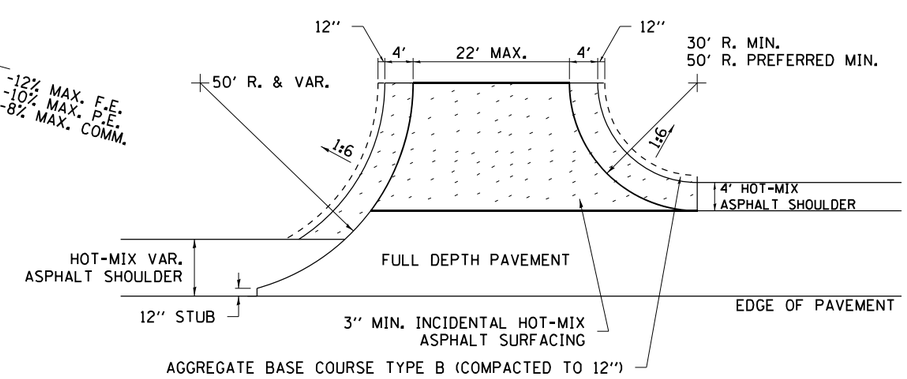

SIDE ROAD RETURN WITH RIGHT TURN LANE

HOT–MIX ASPHALT APPROACHES AND MAILBOX RETURNS 20.1

USER NAME = $USER$	DESIGNED -	REVISED - 8-03-17	
	DRAWN -	REVISED - 1-13-17	
PLOT SCALE = $SCALE$	CHECKED -	REVISED - 6-27-14	
PLOT DATE = $DATE$	DATE -	REVISED - 8-27-13	

STATE OF ILLINOIS
DEPARTMENT OF TRANSPORTATION

REGION 2 / DISTRICT 2 STANDARD

SCALE: N/A | SHEET NO. 18 OF 29 SHEETS | STA. | TO STA.

F.A.P RTE.	SECTION	COUNTY	TOTAL SHEETS	SHEET NO.
301	24R	JO DAVIESS	594	386

CONTRACT NO. 64B40

ILLINOIS FED. AID PROJECT

CONCRETE COLLARS FOR PIPE OR BOX CULVERT EXTENSIONS

Bill of Materials

h bar	U bar dimensions				U_1 bar dimensions				REINF. BARS	EXPANSION BOLTS ¾"	CONCRETE COLLAR
Quantity	X	Y	Length	Quantity	X	Z	Length	Quantity	LBS	EACH	Cu. Yds.
								Total			

All h bars 18 Long

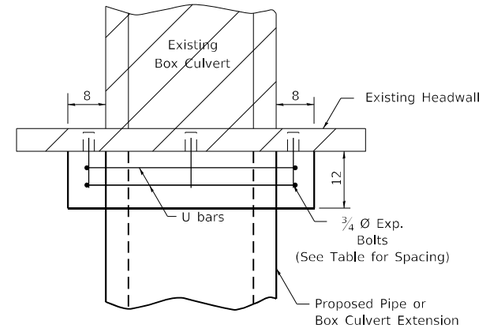

PLAN OF CULVERT WITH STRAIGHT HEADWALL

General Notes

Concrete Collars shall be constructed of Class SI Concrete in accordance with Section 503 of the Standard Specifications

Reinforcement bars shall conform to Section 508 of the Standard Specifications.

Expansion bolts shall be 3/4 Ø hooked bolts and shall conform to Section 540 of the Standard Specifications.

The concrete will be paid for at the contract unit price per cubic yard for CONCRETE COLLAR. Reinforcement will be paid for at the contract unit price per pound for REINFORCEMENT BARS. Expansion Bolts, when required, will be paid for at the contract unit price each for EXPANSION BOLTS ¾ inch, which price shall include furnishing, drilling holes, and installing the expansion bolts complete in place. These bolts shall extend at least 9 inches into the new concrete.

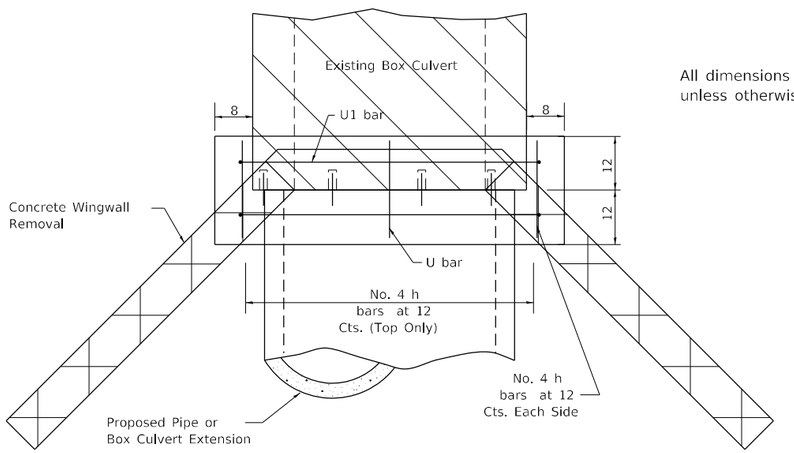

PLAN OF CULVERT WITH ANGLED WING WALLS

All dimensions are in inches unless otherwise noted.

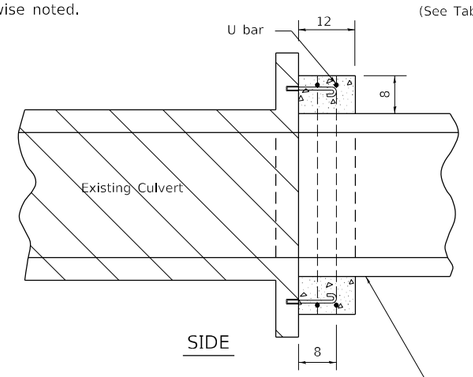

SIDE

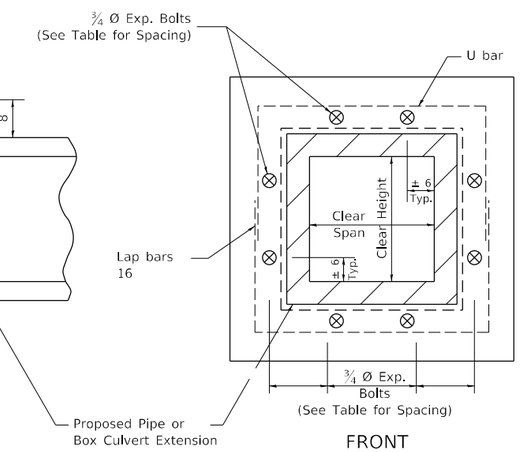

FRONT

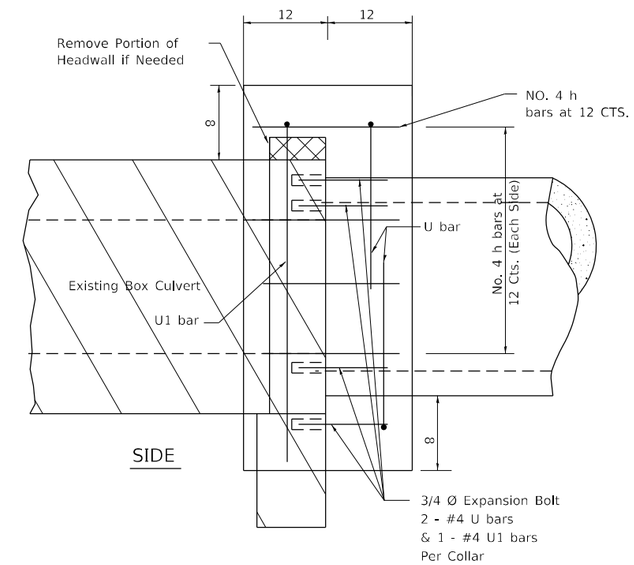

SIDE

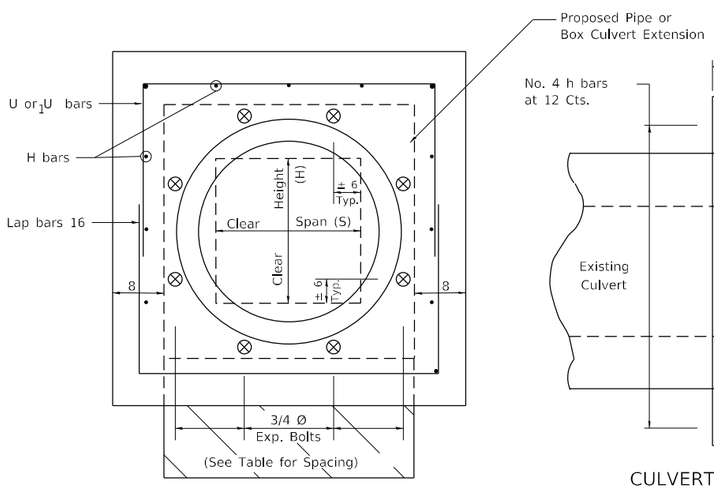

FRONT

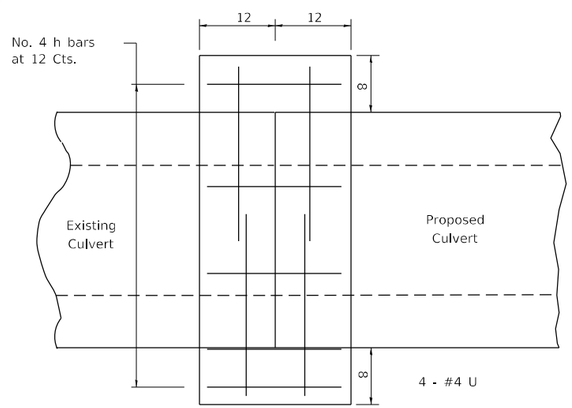

CULVERT CONNECTION WITHOUT EXISTING HEADWALL

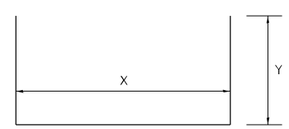

(#4) U bar

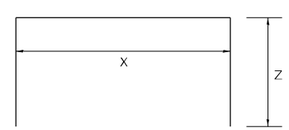

(#4) U_1 bar

PLACEMENT DETAILS FOR EXPANSION BOLTS

H or S	NUMBER OF EXPANSION BOLTS REQUIRED PER SIDE			
	EXTENSIONS ≤ 15'		EXTENSIONS > 15'	
	NUMBER *	SPACING	NUMBER *	SPACING
24	**	**	**	**
30	2	18	2	18
36	2	24	2	24
48	3	18	3	18
60	4	16	3	24
72	5	15	4	20
84	5	18	4	24
96	6	17	5	21
108	6	19	5	24
120	7	18	6	21
132	8	17	6	24
144	8	19	7	22

* Expansion bolts based on non-skewed culverts
** Minimum one expansion bolt at each corner

Example:
6' x 4' box culvert to be extended 18' at one end only.

From table find
6' side requires 4 - ¾" Ø expansion bolts at 20" cts.
4' side requires 3 - ¾" Ø expansion bolts at 18" cts.

Total Number required
(4+3)2 = 14 - ¾" Ø expansion bolts.

USER NAME = $USER$	DESIGNED -	REVISED -	1-18-17
	DRAWN -	REVISED -	1-05-16
PLOT SCALE = $SCALE$	CHECKED -	REVISED -	6-27-14
PLOT DATE = $DATE$	DATE -	REVISED -	10-17-11

STATE OF ILLINOIS
DEPARTMENT OF TRANSPORTATION

REGION 2 / DISTRICT 2 STANDARD

SCALE: N/A | SHEET NO. 19 OF 29 SHEETS | STA. TO STA.

F.A.P RTE.	SECTION	COUNTY	TOTAL SHEETS	SHEET NO.
301	24R	JO DAVIESS	594	387

CONTRACT NO. 64B40

ILLINOIS FED. AID PROJECT

WORK ZONE SIGN DETAILS

ILLINOIS STANDARD G20–I100

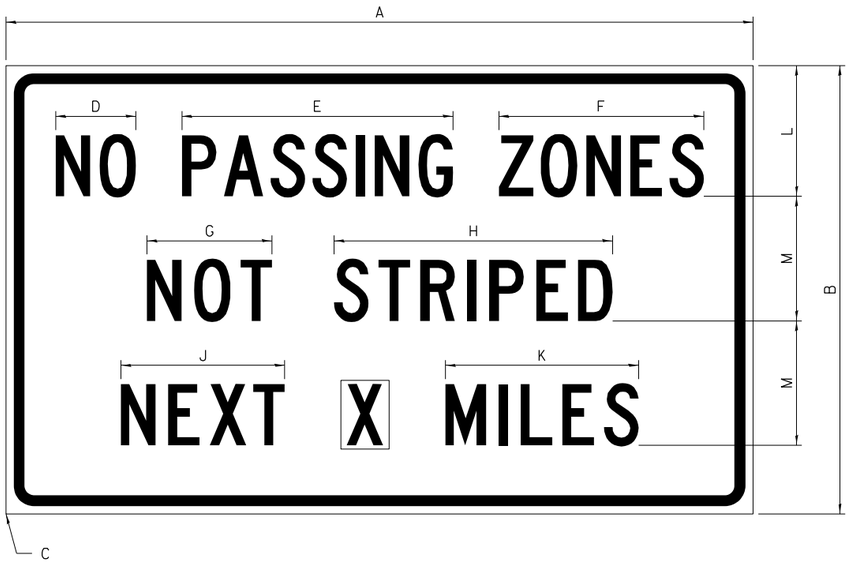

COLOR	LEGEND AND BORDER BACKGROUND	BLACK ORANGE	NON-REFLECTORIZED REFLECTORIZED

SIGN SIZE	DIMENSIONS											
	A	B	C	D	E	F	G	H	J	K	L	M
60 x 36	60.00	36.00	2.25	6.4	21.80	16.40	10.00	22.40	13.20	15.50	10.50	10.00

SIGN SIZE	SERIES BY LINE			MARGIN	BORDER
	1	2	3		
60 x 36	5C	5C	5C	0.625	0.875

Sign not to scale

ILLINOIS STANDARD W8–I107

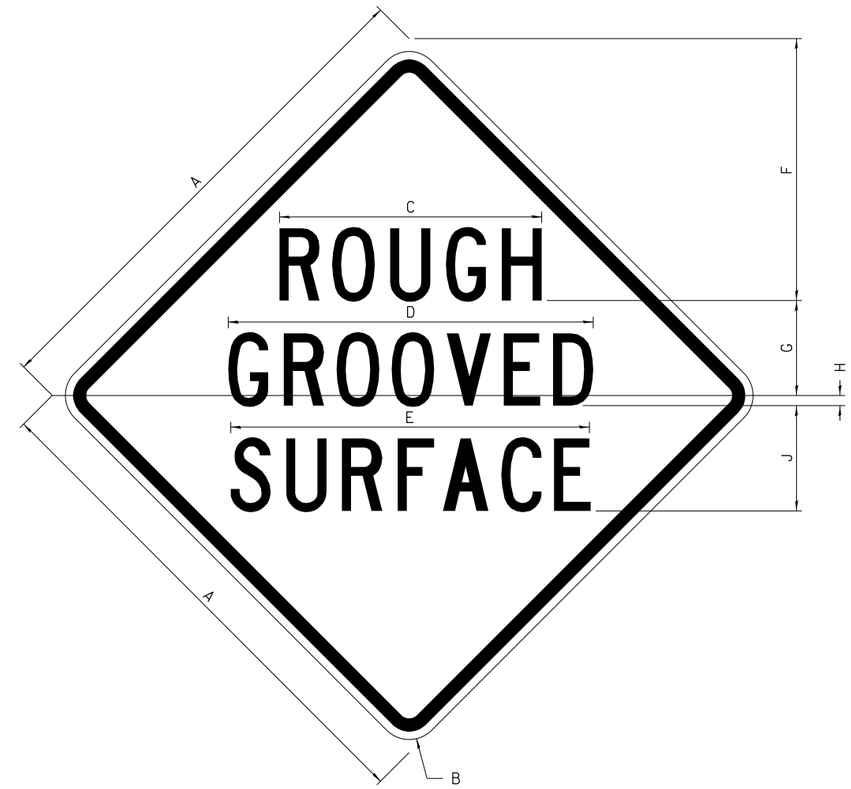

COLOR	LEGEND AND BORDER BACKGROUND	BLACK ORANGE	NON-REFLECTORIZED REFLECTORIZED

SIGN SIZE	DIMENSIONS								
	A	B	C	D	E	F	G	H	J
48 x 48	48.00	3.00	25.00	34.80	34.20	24.94	9.00	1.00	10.00

SIGN SIZE	SERIES BY LINE			MARGIN	BORDER
	1	2	3		
48 x 48	7C	7C	7C	1.250	0.750

Sign not to scale

GENERAL NOTES

All work to furnish and install these signs shall be included in the cost of the specified traffic control standards and shall not be paid separately.

All Illinois Standard signs shall conform to the latest edition of the "Illinois Standard Highway Signs Book" in effect on the date of invitation for bids.

Signs shall meet the applicable portions of Sections 701 and 720 of the Standard Specifications.

All dimensions are in inches unless otherwise noted.

WORK ZONE SIGN DETAILS SHEET 1 OF 4 34.1

WORK ZONE SIGN DETAILS

ILLINOIS STANDARD W12–I102

(1)

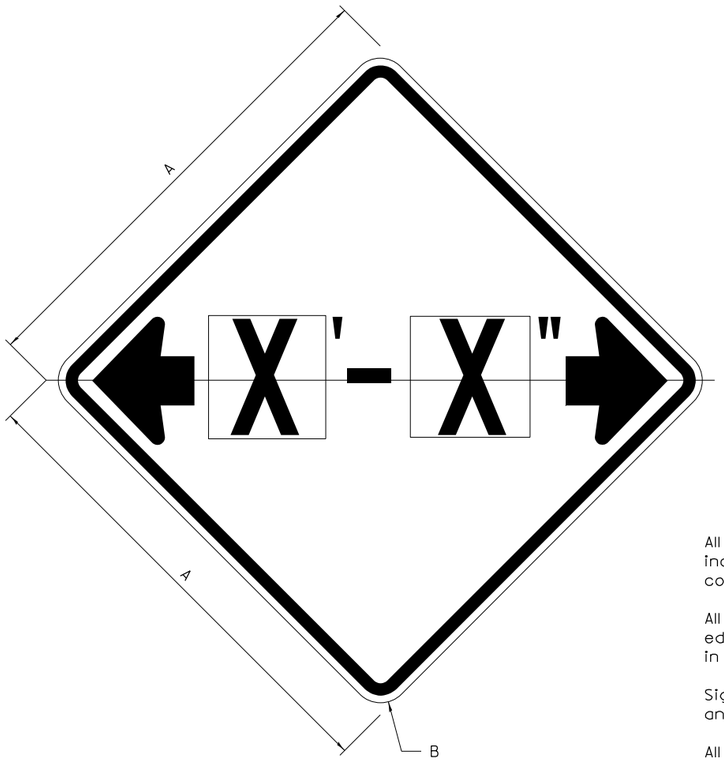

COLOR			
	LEGEND AND BORDER	BLACK	NON-REFLECTORIZED
	BACKGROUND	FL ORANGE	REFLECTORIZED

SIGN SIZE	DIMENSIONS	
	A	B
48 x 48	48.00	3.00

(1) Illinois Standard signs W12-I102 and W12-I103 shall be used as described in the special provisions.

SIGN SIZE	SERIES BY LINE	MARGIN	BORDER
	1		
48 x 48	12C	0.750	1.250

Sign not to scale

GENERAL NOTES

All work to furnish and install these signs shall be included in the cost of the specified traffic control standards and shall not be paid separately.

All Illinois Standard signs shall conform to the latest edition of the "Illinois Standard Highway Signs Book" in effect on the date of invitation for bids.

Signs shall meet the applicable portions of Sections 701 and 720 of the Standard Specifications.

All dimensions are in inches unless otherwise noted.

ILLINOIS STANDARD W12–I103

(1)

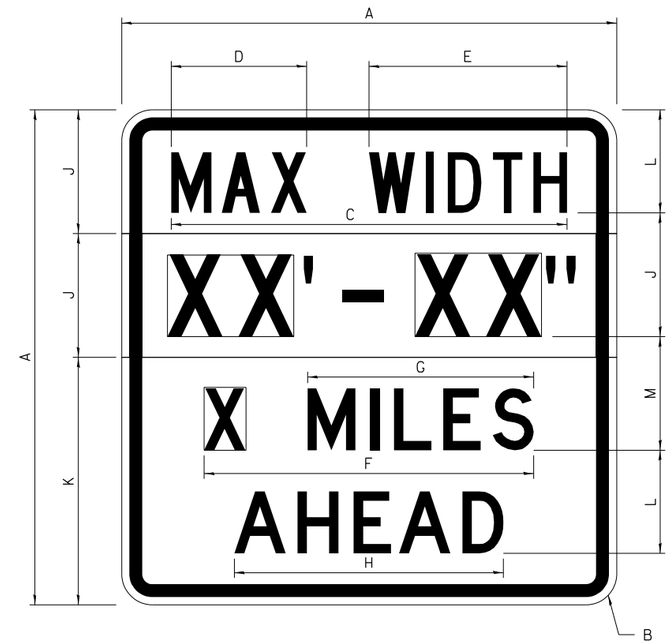

COLOR			
	LEGEND AND BORDER	BLACK	NON-REFLECTORIZED
	BACKGROUND	WHITE	REFLECTORIZED
	BACKGROUND (WIDTH)	FL ORANGE	REFLECTORIZED

SIGN SIZE	DIMENSIONS											
	A	B	C	D	E	F	G	H	J	K	L	M
48 x 48	48.00	3.00	38.40	13.20	19.20	32.00	22.00	26.20	12.00	24.00	10.00	11.00

SIGN SIZE	SERIES BY LINE				MARGIN	BORDER
	1	2	3	4		
48 x 48	6C	8D	6D	6D	0.750	1.250

Sign not to scale

XX'-XX" WIDTH AND X MILES ARE VARIABLE
TOP AND BOTTOM OF BACKGROUND WHITE

WORK ZONE SIGN DETAILS SHEET 2 OF 4 **34.1**

WORK ZONE SIGN DETAILS

ROAD CLOSED TO OVERSIZED LOADS

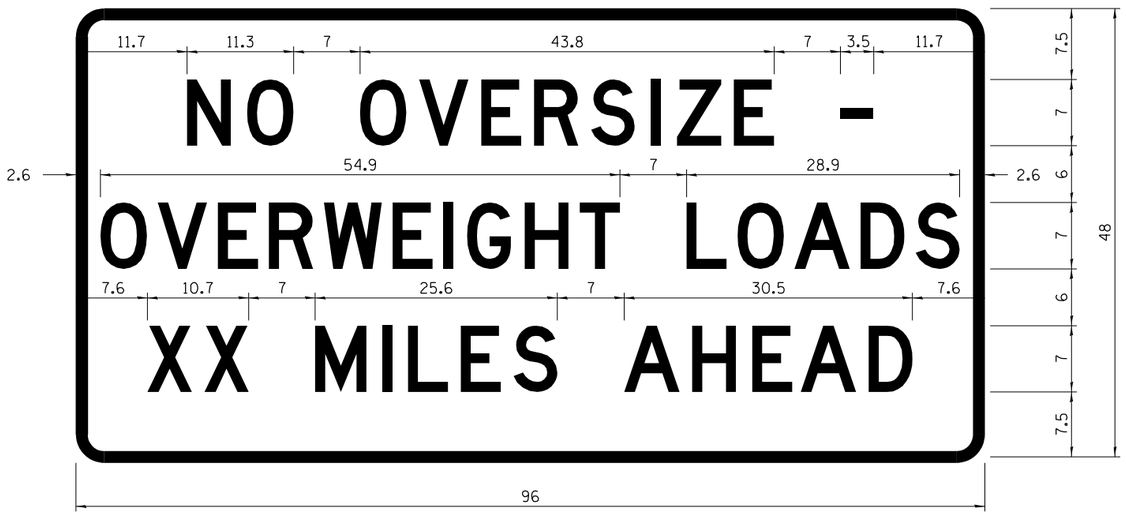

COLOR			
	LEGEND AND BORDER	BLACK	NON-REFLECTORIZED
	BACKGROUND	ORANGE	REFLECTORIZED

Permit Loads - Loads Over 13 Feet; 3.0" Radius, 1.3" Border;
[NO OVERSIZE -] D; [OVERWEIGHT LOADS] D 85% spacing; [XX MILES AHEAD] D;
Table of letter and object lefts.

N	O	O	V	E	R	S	I	Z	E	-
11.7	18.1	30.0	36.2	42.8	48.4	54.4	60.7	63.5	69.5	80.8

O	V	E	R	W	E	I	G	H	T	L	O	A	D	S
2.6	8.6	15.0	20.4	26.2	33.4	38.8	41.3	47.4	53.2	64.5	69.9	75.9	82.9	88.7

X	X	M	I	L	E	S	A	H	E	A	D
7.6	13.6	25.3	32.3	35.1	40.6	46.2	57.9	65.1	71.4	76.6	83.7

Sign not to scale

STOP LINE SIGN FOR TEMPORARY SIGNALS

COLOR			
	LEGEND AND BORDER	BLACK	NON-REFLECTORIZED
	BACKGROUND	WHITE	REFLECTORIZED

SIGN SIZE	SERIES BY LINE		
	1	2	3
24 x 24	4C	4C	4C

Sign not to scale

GENERAL NOTES

All work to furnish and install these signs shall be included in the cost of the specified traffic control standards and shall not be paid separately.

All Illinois Standard signs shall conform to the latest edition of the "Illinois Standard Highway Signs Book" in effect on the date of invitation for bids.

Signs shall meet the applicable portions of Sections 701 and 720 of the Standard Specifications.

All dimensions are in inches unless otherwise noted.

WORK ZONE SIGN DETAILS

ENTRANCE SIGN FOR USE WITH TEMPORARY SIGNALS

(2)

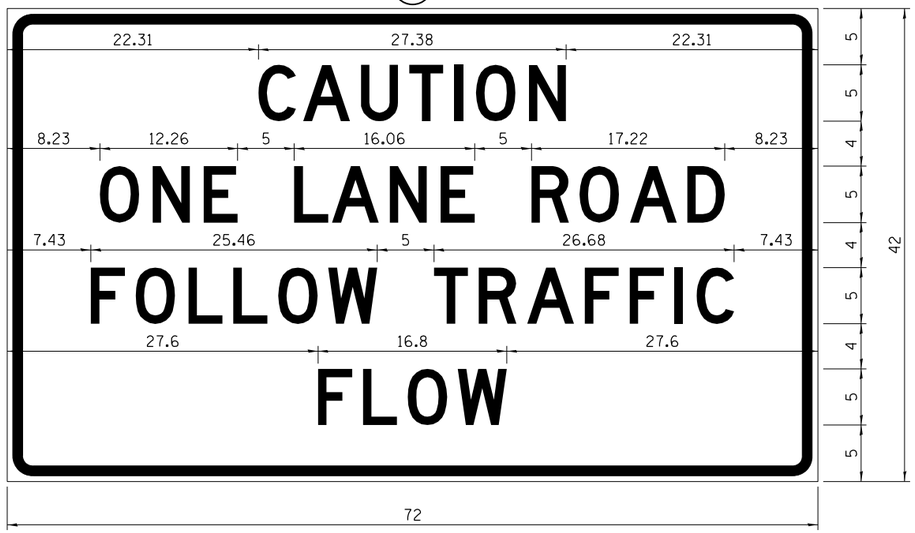

COLOR	LEGEND AND BORDER	BLACK	NON-REFLECTORIZED
	BACKGROUND	ORANGE	REFLECTORIZED

2.25" Radius, 0.88" Border, 0.50" IndenT;
[CAUTION] D; [ONE LANE ROAD] D;
[FOLLOW TRAFFIC] D; [FLOW] D

(2) This sign shall be installed at entrances located between the temporary signals as shown in the staging plans.

Table Of Widths And Spaces

22.31	C 3.36	0.62	A 4.18	0.94	U 3.36	0.94	T 3.04	0.94	I 0.78	1.17	O 3.52	1.17	N 3.36	22.31

8.23	O 3.51	1.17	N 3.36	1.18	E 3.04

5.00	L 3.05	0.31	A 4.18	0.94	N 3.36	1.17	E 3.05

5.00	R 3.36	0.93	O 3.52	0.94	A 4.18	0.93	D 3.36	8.23

7.43	F 3.04	0.94	O 3.52	1.17	L 3.04	0.94	L 3.05	0.94	O 3.51	0.94	W 4.37

5.00	T 3.05	0.94	R 3.36	0.94	A 4.18	0.93	F 3.05	0.94	F 3.04	0.94	I 0.78	1.18	C 3.35	7.43

27.60	F 3.05	0.94	L 3.04	0.94	O 3.52	0.93	W 4.38	27.60

Sign not to scale

GENERAL NOTES

All work to furnish and install these signs shall be included in the cost of the specified traffic control standards and shall not be paid separately.

All Illinois Standard signs shall conform to the latest edition of the "Illinois Standard Highway Signs Book" in effect on the date of invitation for bids.

Signs shall meet the applicable portions of Sections 701 and 720 of the Standard Specifications.

All dimensions are in inches unless otherwise noted.

STAY IN YOUR LANE

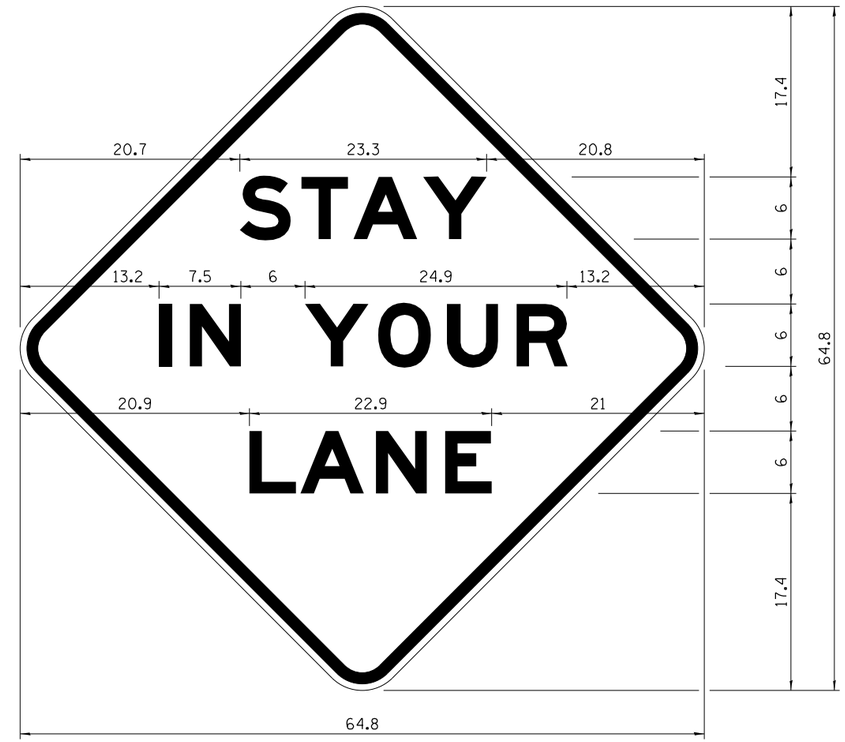

COLOR	LEGEND AND BORDER	BLACK	NON-REFLECTORIZED
	BACKGROUND	ORANGE	REFLECTORIZED

48.0" across sides 3.8" Radius, 1.0" Border, 0.6" Indent;
"STAY" E Mod; "IN YOUR" E Mod; "LANE" E Mod;

Table of Letter and Object Lefts

S 20.7	T 26.8	A 31.6	Y 38.0

I 13.2	N 15.9	Y 26.7	O 33.9	U 40.5	R 46.8

L 20.9	A 25.8	N 33.1	E 39.4

Sign not to scale

WORK ZONE SIGN DETAILS SHEET 4 OF 4 34.1

TRAFFIC CONTROL FOR ROAD CLOSURE

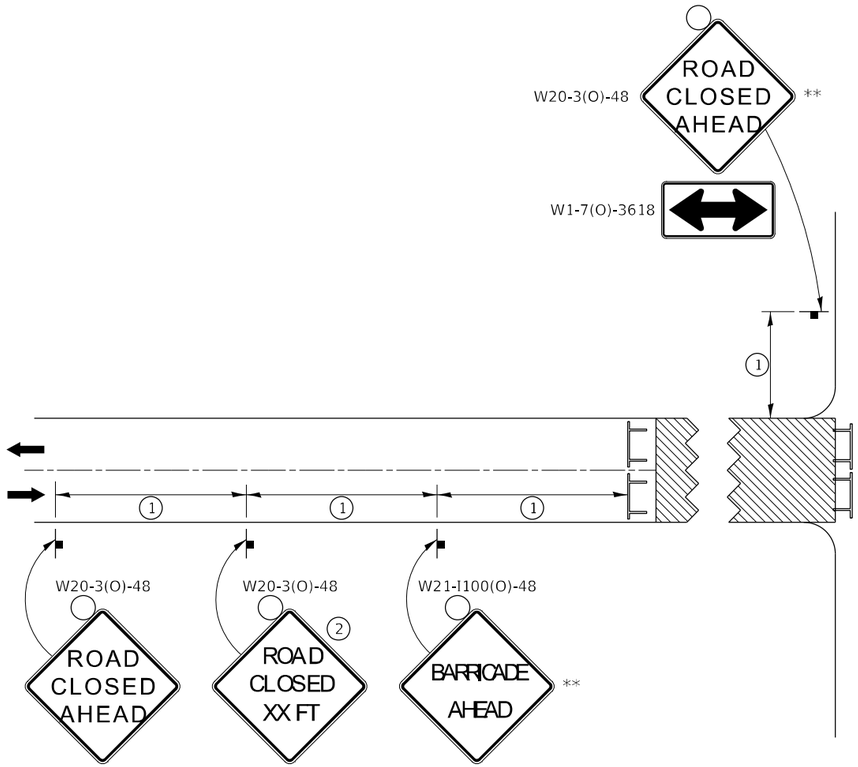

CONDITION II

Minor
Sideroad Closure

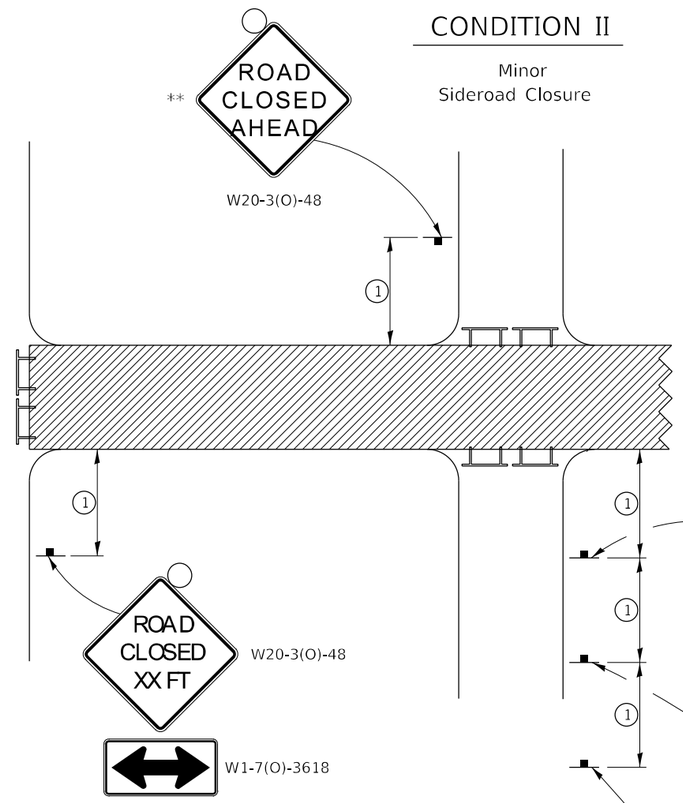

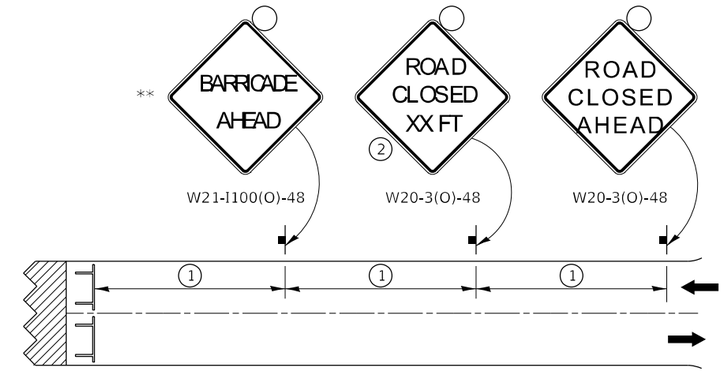

SYMBOLS

- Work area
- Type III Barricade with Flashers
- Sign with flashing light

CONDITION I

Major
Sideroad Closure

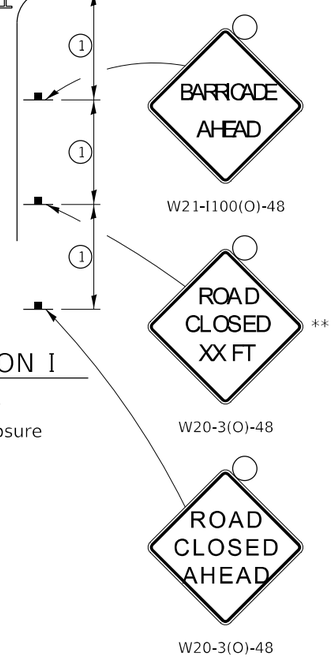

① SIGN SPACING TABLE

Posted Speed	Sign Spacing
45 MPH and above	500'
Below 45 MPH	250'

② SIGN LEGEND

Posted Speed Limit	Distance
45 MPH and above	1000'
Below 45 MPH	500'

ROAD CLOSED TO THRU TRAFFIC BARRICADE SET UP

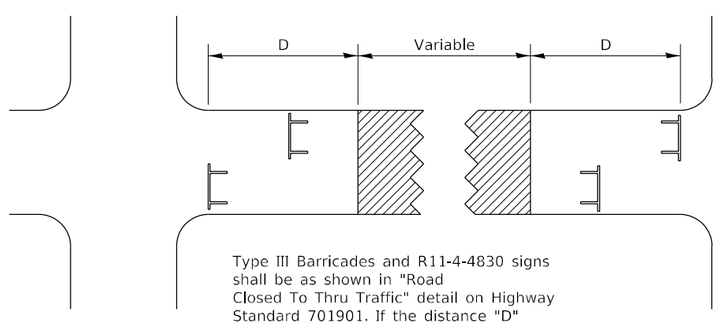

Type III Barricades and R11-4-4830 signs shall be as shown in "Road Closed To Thru Traffic" detail on Highway Standard 701901. If the distance "D" exceeds 2000' an additional set of barricades and R11-4-4830 shall be placed at each end of the work area.

GENERAL NOTES

Longitudinal dimensions may be adjusted to fit field conditions.

Side roads requiring all three signs as shown in CONDITION I (Major Sideroad Closure), shall be listed in the special provision.

** Where local access is to be maintained, barricades are to be set up as shown in "Road Closed To Thru Traffic". Type III Barricades and R11-2-4830 signs shall be as shown in "Road Closed To All Traffic" detail on Highway Standard 701901.

All dimensions are in inches unless otherwise shown.

TYPICAL APPLICATION FOR ROAD CLOSURE

USER NAME = $USER$	DESIGNED -	REVISED -	8-03-17
	DRAWN -	REVISED -	1-05-16
PLOT SCALE = $SCALE$	CHECKED -	REVISED -	8-27-13
PLOT DATE = $DATE$	DATE -	REVISED -	10-17-11

STATE OF ILLINOIS
DEPARTMENT OF TRANSPORTATION

REGION 2 / DISTRICT 2 STANDARD

SCALE: | SHEET 24 OF 29 SHEETS | STA. | TO STA.

F.A.P RTE.	SECTION	COUNTY	TOTAL SHEETS	SHEET NO.
301	24R	JO DAVIESS	594	392

CONTRACT NO. 64B40

ILLINOIS | FED. AID PROJECT

TYPICAL PAVEMENT MARKINGS

TYPICAL PAVEMENT MARKING FOR FLUSH MEDIAN AT LEFT TURN LANE

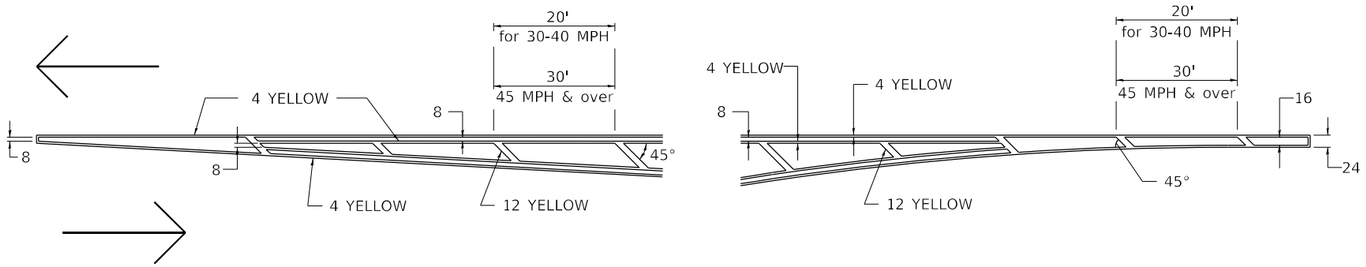

MEDIAN PAVEMENT MARKING

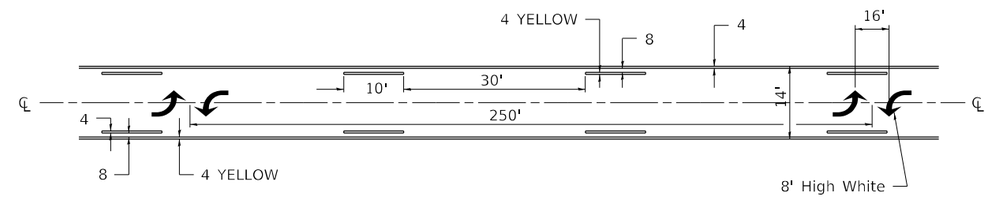

ALL DIMENSIONS ARE IN INCHES UNLESS OTHERWISE NOTED.

TYPICAL ISLAND OFFSET SHOULDER WIDTH

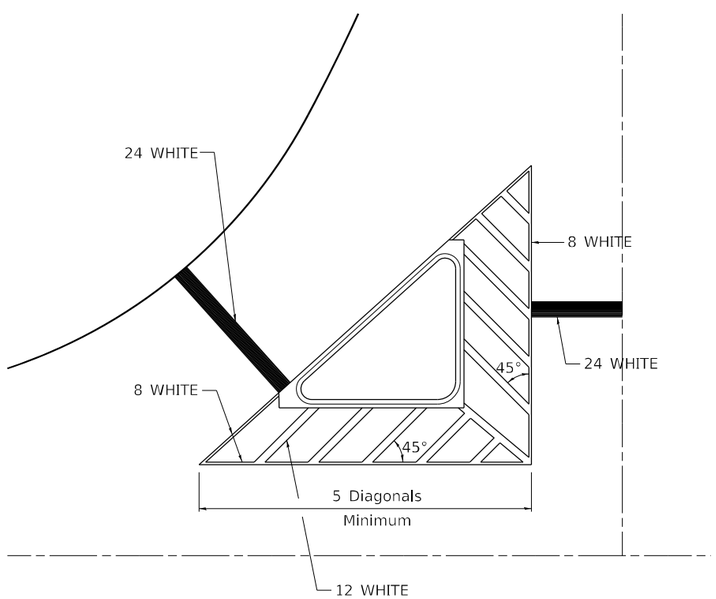

TYPICAL MARKING FOR PAINTED ISLANDS

NOTE:
* 45° TO LOCAL TAN.

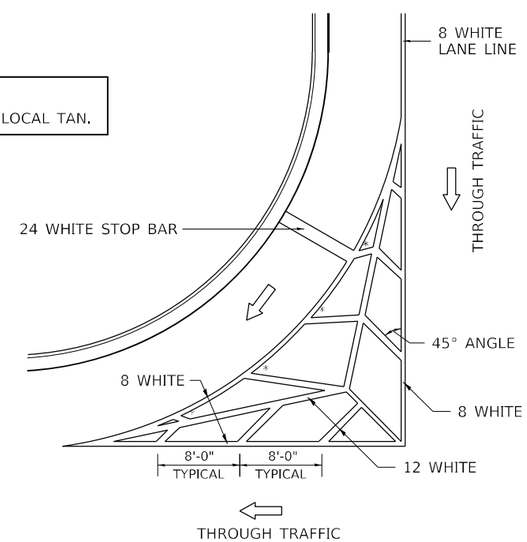

STANDARD CROSSWALK MARKING

See Schedules for Locations

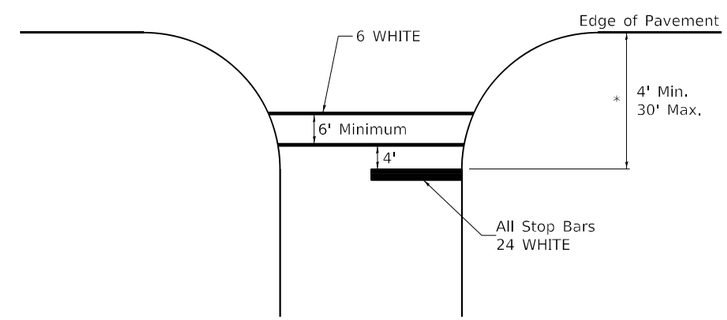

* Distance to the nearest edge of the intersecting roadway in the absence of a marked crosswalk.

USER NAME = $USER$	DESIGNED -	REVISED - 6-27-14	STATE OF ILLINOIS DEPARTMENT OF TRANSPORTATION
	DRAWN -	REVISED - 3-05-12	
PLOT SCALE = $SCALE$	CHECKED -	REVISED -	
PLOT DATE = $DATE$	DATE -	REVISED -	

REGION 2 / DISTRICT 2 STANDARD

SCALE: N/A | SHEET NO. 25 OF 29 SHEETS | STA. | TO STA.

F.A.P RTE.	SECTION	COUNTY	TOTAL SHEETS	SHEET NO.
301	24R	JO DAVIESS	594	393
		CONTRACT NO. 64B40		
		ILLINOIS FED. AID PROJECT		

TYPICAL PAVEMENT MARKINGS

ARROW LAYOUT

SYMBOLS

- ONE-WAY AMBER MARKER
- ONE-WAY CRYSTAL MARKER
- TWO-WAY AMBER MARKER

ALL DIMENSIONS ARE IN INCHES UNLESS OTHERWISE NOTED.

TYPICAL PAVEMENT MARKING FOR FLUSH MEDIAN

SKIP DASH SPACING

4' GAP for speeds less than 45mph
6' GAP for speeds 45mph - 55mph
8' GAP for speeds greater than 55mph

RECOMMENDED SPACING BETWEEN DIAGONALS (IN FEET)

Speed Limit Range	Continuous Median Area	Intersection Channelization	Objects (Islands)
less than 30MPH	50'	15'	10'
30-40MPH	75'	20'	15'
45MPH & over	75'	30'	20'

NOTE: If the spacing recommended in the Table does not permit at least five diagonal lines in the area being marked, the spacing from the next lowest speed range should be used. The recommended spacing is measured parallel to the pavement center line.

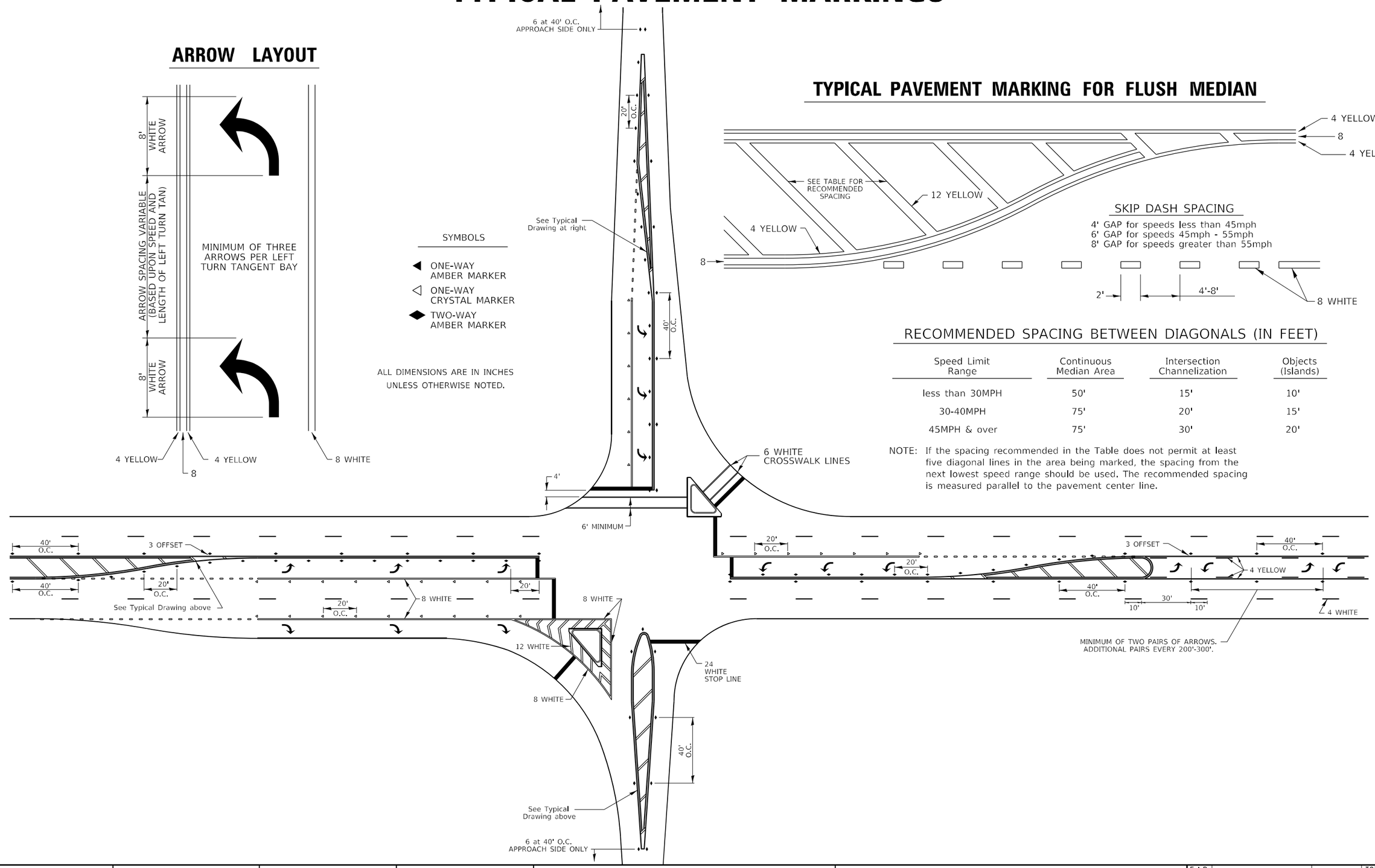

USER NAME = $USER$	DESIGNED -	REVISED - 6-27-14	STATE OF ILLINOIS DEPARTMENT OF TRANSPORTATION
	DRAWN -	REVISED - 3-05-12	
PLOT SCALE = $SCALE$	CHECKED -	REVISED -	
PLOT DATE = $DATE$	DATE -	REVISED -	

REGION 2 / DISTRICT 2 STANDARD

SCALE: N/A | SHEET NO. 26 OF 29 SHEETS | STA. | TO STA.

F.A.P RTE.	SECTION	COUNTY	TOTAL SHEETS	SHEET NO.
301	24R	JO DAVIESS	594	394

CONTRACT NO. 64B40

ILLINOIS FED. AID PROJECT

TYPICAL PAVEMENT MARKINGS

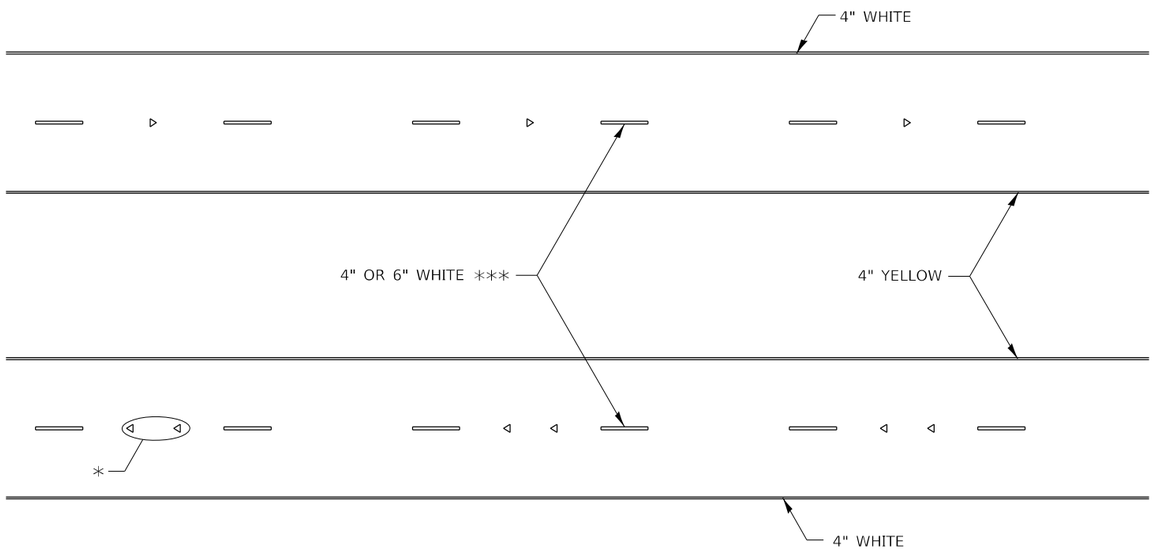

* SEE HIGHWAY STANDARD 781001 FOR SPACING DETAILS.
USE DOUBLE MARKERS WHEN ADT ≥ 20,000.

MULTI–LANE / DIVIDED

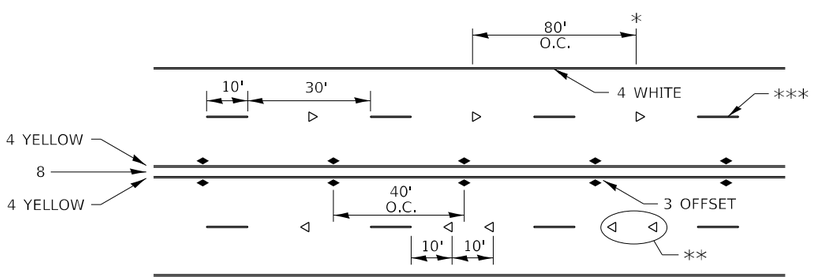

* REDUCE TO 40' O.C. ON CURVES WHERE ADVISORY SPEEDS ARE 10 MPH LOWER THAN POSTED SPEEDS.

** USE DOUBLE MARKERS WHEN ADT ≥ 20,000

*** CENTERLINE SKIP DASH PAVEMENT MARKING SPEED LIMIT LESS THAN 40 MPH USE 4" LINE. SPEED LIMIT 40 MPH AND OVER USE 6" LINE.

MULTI–LANE / UNDIVIDED & ONE WAY

(FOR MULTI-LANE UNDIVIDED HIGHWAYS USE THIS DETAIL NOT HIGHWAY STANDARD 781001)

TYPICAL PARKING SPACING

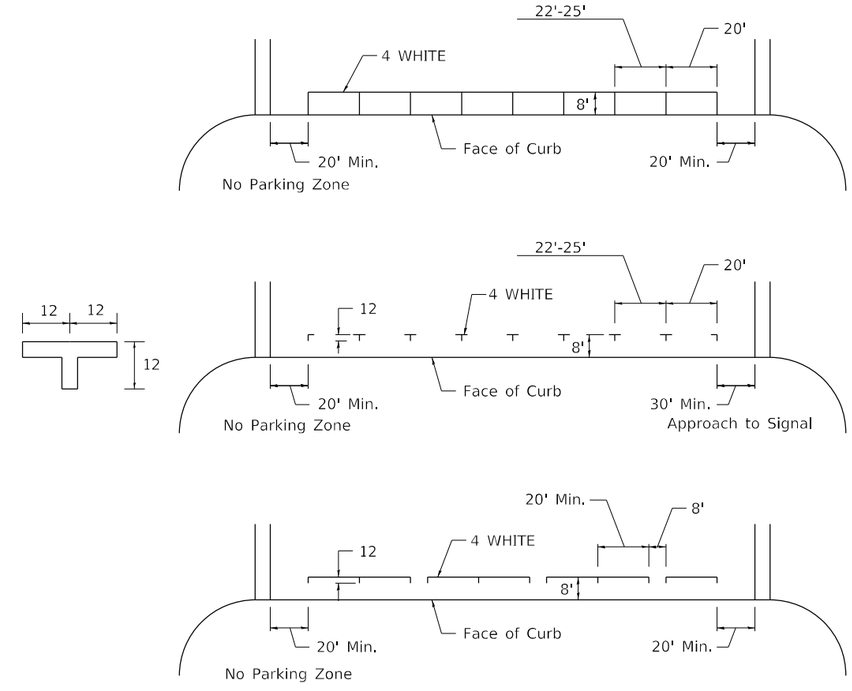

TYPICAL PAVEMENT MARKING FOR TWO LANE SECTION – NO PASSING ZONES

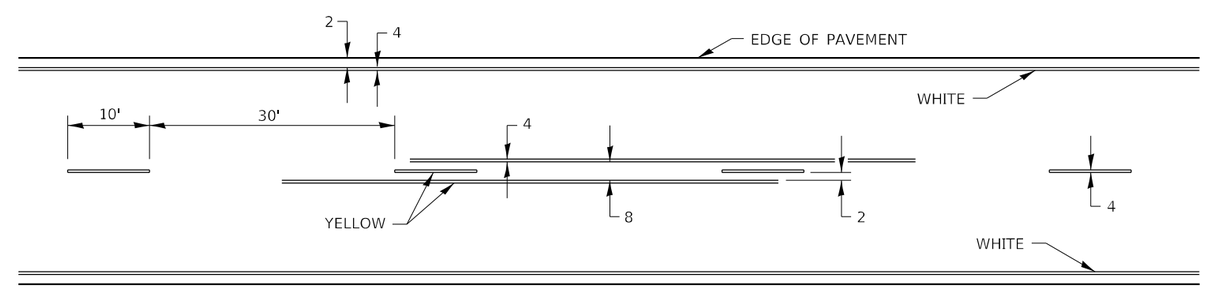

ALL DIMENSIONS ARE IN INCHES UNLESS OTHERWISE NOTED.

USER NAME = $USER$	DESIGNED -	REVISED - 6-27-14	STATE OF ILLINOIS DEPARTMENT OF TRANSPORTATION
	DRAWN -	REVISED - 8-27-13	
PLOT SCALE = $SCALE$	CHECKED -	REVISED - 11-28-12	
PLOT DATE = $DATE$	DATE -	REVISED -	

REGION 2 / DISTRICT 2 STANDARD

SCALE: N/A | SHEET NO. 27 OF 29 SHEETS | STA. TO STA.

F.A.P RTE.	SECTION	COUNTY	TOTAL SHEETS	SHEET NO.
301	24R	JO DAVIESS	594	395
		CONTRACT NO. 64B40		
		ILLINOIS FED. AID PROJECT		

TYPICAL PAVEMENT MARKINGS

** 6" WHITE ON INTERSTATES, WHERE THE SPPED LIMIT IS 65 MPH, OR WHEN DIRECTED BY THE ENGINEER.

4" WIDE AT ALL OTHER LOCATIONS.

NOTE: GORE HATCHING PLACED ONLY WHEN SCHEDULED IN THE PLANS

EXIT RAMP

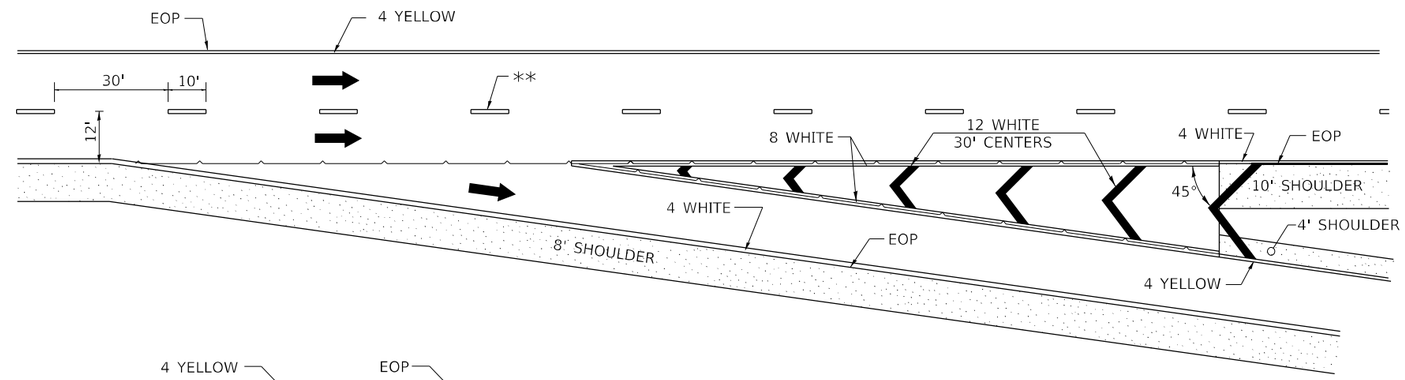

ENTRANCE RAMP

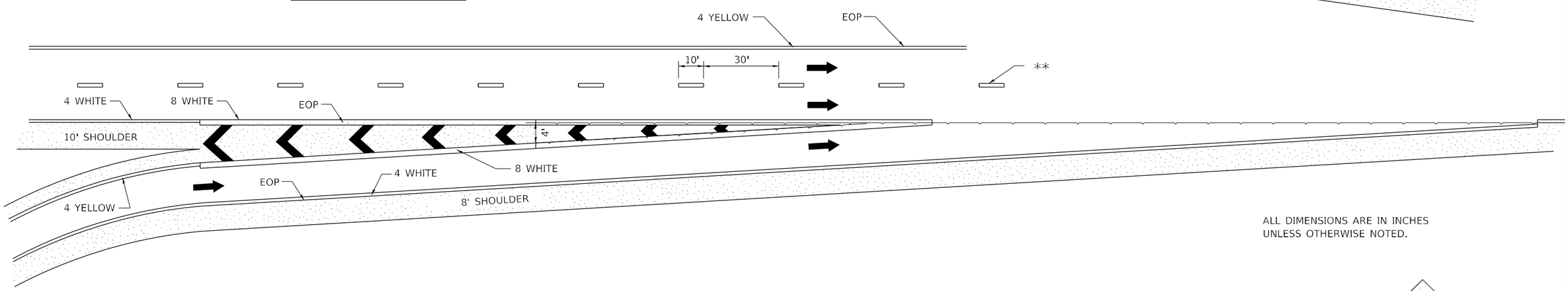

ALL DIMENSIONS ARE IN INCHES UNLESS OTHERWISE NOTED.

CLOVERLEAF

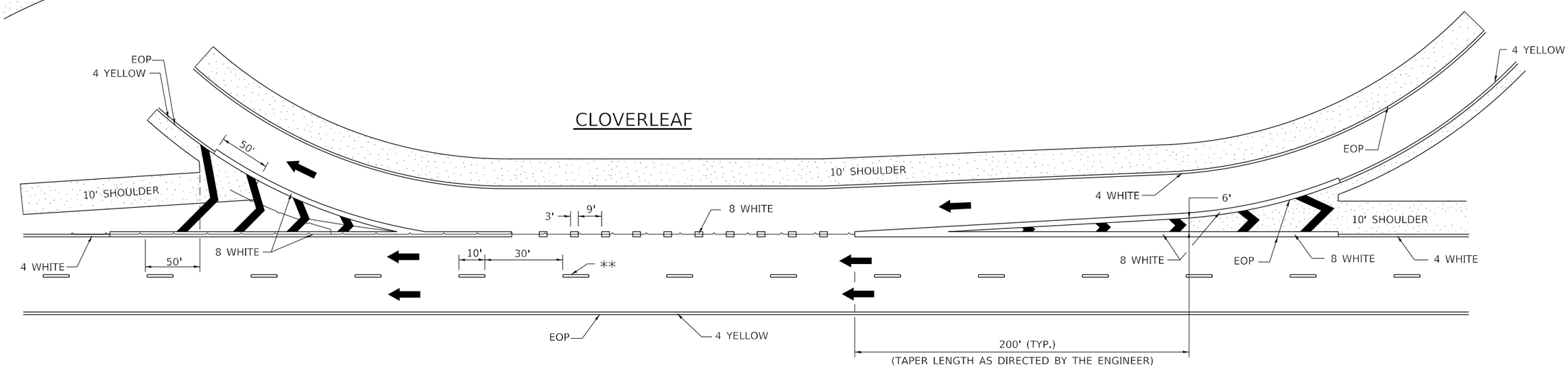

USER NAME = $USER$	DESIGNED -	REVISED - 9-15-23	
	DRAWN -	REVISED - 8-27-13	
PLOT SCALE = $SCALE$	CHECKED -	REVISED - 10-18-11	
PLOT DATE = $DATE$	DATE -	REVISED -	

STATE OF ILLINOIS
DEPARTMENT OF TRANSPORTATION

REGION 2 / DISTRICT 2 STANDARD

SCALE: N/A | SHEET NO. 28 OF 29 SHEETS | STA. | TO STA.

F.A.P RTE.	SECTION	COUNTY	TOTAL SHEETS	SHEET NO.
301	24R	JO DAVIESS	594	396

CONTRACT NO. 64B40

ILLINOIS FED. AID PROJECT

GUARDRAIL REFLECTORS, TYPE C (SPECIAL)

REFLECTORS FOR GUARDRAIL BLOCK OUT OR DELINEATOR POST

STRAIGHT
REFLECTOR / DELINEATOR

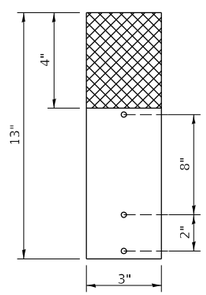

SIDE VIEW

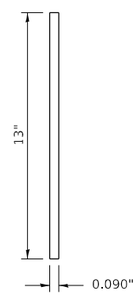

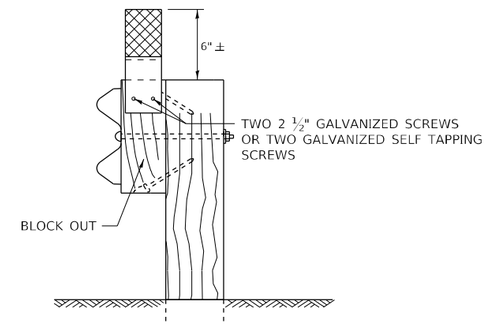

MOUNTED ON A GUARDRAIL BLOCK OUT

REFLECTORS SHALL BE MOUNTED DIRECTLY TO BLOCK OUTS.

REFLECTORS MOUNTED ON WOODEN OR PLASTIC OR METAL BLOCK OUT SHALL BE MOUNTED USING TWO 2 ½" GALVANIZED SCREWS WITH WASHERS OR TWO SELF TAPPING GALVANIZED SCREWS WITH WASHERS.

ADDITIONAL SHEETING MAY BE ADDED AS NEEDED FOR TURN AROUNDS AS SHOWN IN THE PLANS

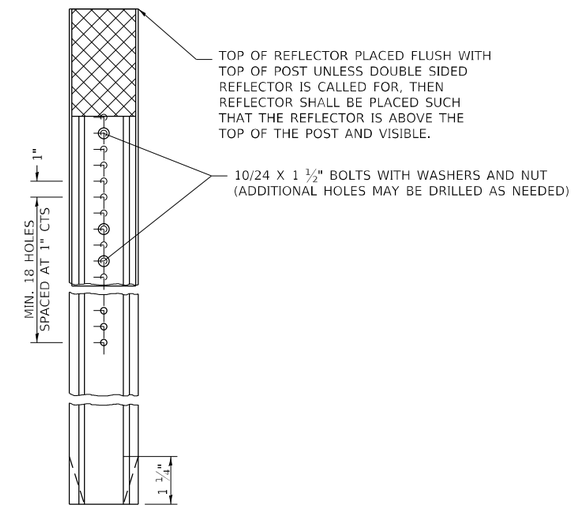

MOUNTED ON A DELINEATOR POST

REPLACING
3 BUTTON
DELINEATOR

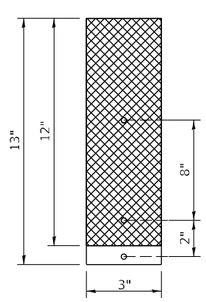

REPLACING
2 BUTTON
DELINEATOR

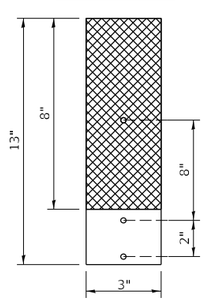

ADDITIONAL HOLES SHALL BE DRILLED IN THE REFLECTORS AS SHOWN ABOVE.

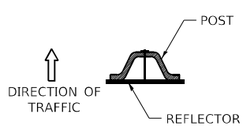

DELINEATORS SHALL BE INSTALLED ACCORDING TO STANDARD 635001 EXCEPT THAT THE POST SHALL BE ROTATED 180° . THE POST WILL HAVE THE WIDE SIDE FACING TRAFFIC AND THE REFLECTOR ATTACHECD AS SHOWN ABOVE.

NOTE:

REFLECTORS SHALL BE PAID FOR AT THE CONTRACT UNIT PRICE PER EACH FOR GUARDRAIL REFLECTORS, TYPE C (SPECIAL), WHICH PRICE SHALL ALSO INCLUDE SCREWS, WASHERS OR AN APPROVED BONDING AGENT.

REFLECTORS INSTALLED ON TWO LANE ROADS SHALL BE DOUBLE SIDED AND BOTH SIDES SHALL BE CRYSTAL.

REFLECTORS INSTALLED ON CENTER BARRIER OR IN THE MEDIAN SHALL BE DOUBLE SIDED AND BOTH SIDES SHALL BE AMBER.

REFLECTORS INSTALLED ON DIVIDED HIGHWAYS ON THE OUTSIDE OF THE ROADWAY SHALL BE DOUBLE SIDED CRYSTAL.

SPACING FOR REFLECTORS SHALL BE ACCORDING TO STANDARD 782006 UNLESS OTHERWISE NOTED IN THE PLANS.

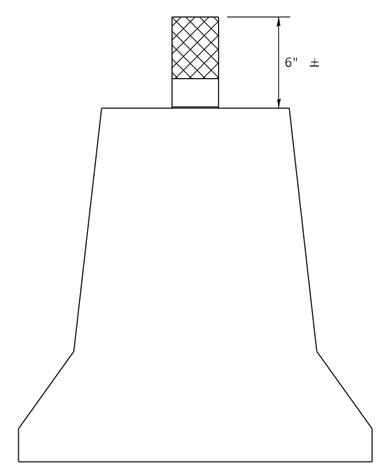

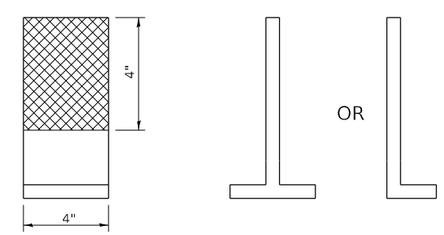

SIDE VIEW

REFLECTORS MOUNTED ON BARRIER WALL

NOTE:

REFLECTORS SHALL BE PAID FOR AT THE CONTRACT UNIT PRICE PER EACH FOR GUARDRAIL REFLECTORS, TYPE C (SPECIAL), WHICH PRICE SHALL ALSO INCLUDE SCREWS, WASHERS OR AN APPROVED BONDING AGENT.

REFLECTORS INSTALLED ON TWO LANE ROADS SHALL BE DOUBLE SIDED AND BOTH SIDES SHALL BE CRYSTAL.

REFLECTORS INSTALLED ON CENTER BARRIER SHALL BE DOUBLE SIDE AND BOTH SIDES SHALL BE AMBER.

REFLECTORS INSTALLED ON DIVIDED HIGHWAYS ALONG THE OUSTIDE OF THE HIGHWAY SHALL BE DOUBLE SIDED CRYSTAL.

SPACING FOR REFLECTORS SHALL BE ACCORDING TO STANDARD 782006 UNLESS OTHERWISE NOTED IN THE PLANS.

USER NAME = $USER$	DESIGNED -	REVISED -	4-27-23
	DRAWN -	REVISED -	4-27-23
PLOT SCALE = $SCALE$	CHECKED -	REVISED -	6-21-21
PLOT DATE = $DATE$	DATE -	REVISED -	

STATE OF ILLINOIS
DEPARTMENT OF TRANSPORTATION

REGION 2 / DISTRICT 2 STANDARD

SCALE: N/A | SHEET NO. 29 OF 29 SHEETS | STA. | TO STA.

F.A.P RTE.	SECTION	COUNTY	TOTAL SHEETS	SHEET NO.
301	24R	JO DAVIESS	594	397

CONTRACT NO. 64B40

ILLINOIS FED. AID PROJECT

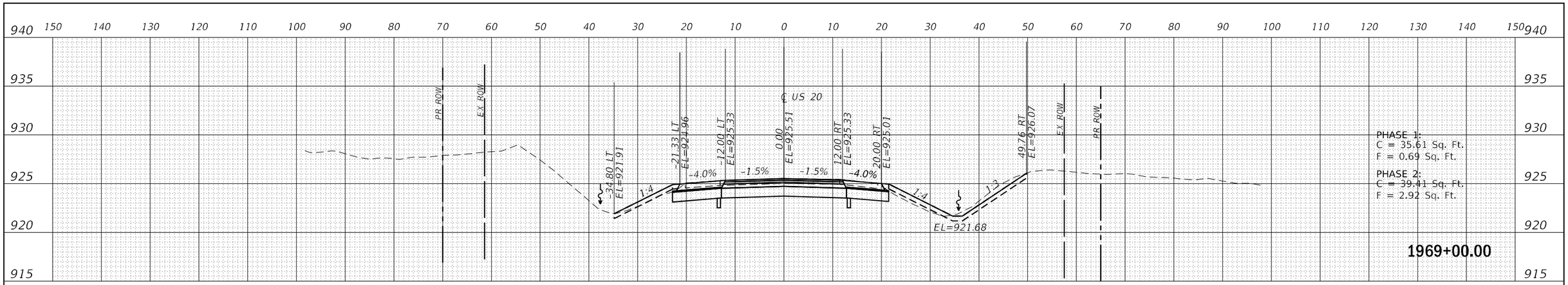

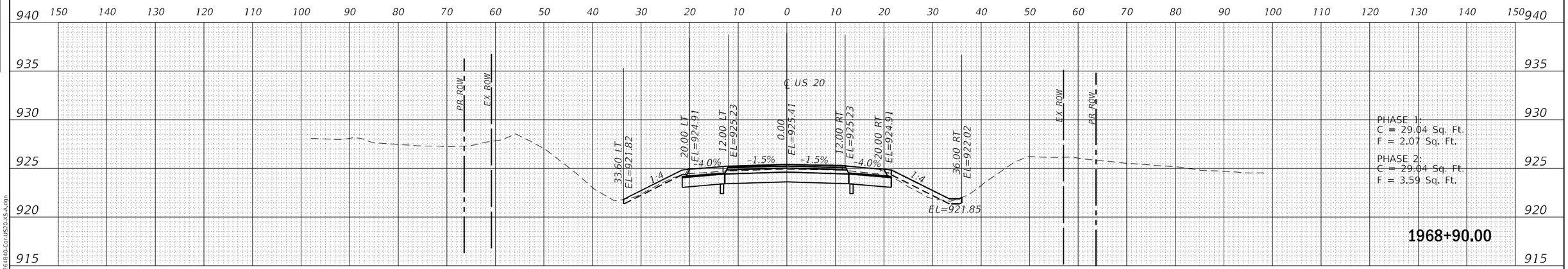

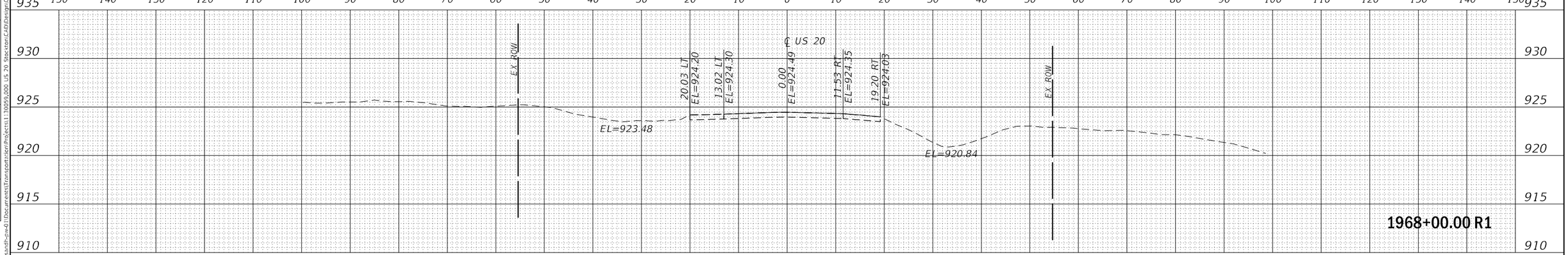

0 10 20 30
HORIZONTAL SCALE

0 5 10 15
VERTICAL SCALE

FINAL SURVEY	BY	DATE
SURVEYED		
PLOTTED		
TEMPLATE		
AREAS		
AREAS CHECKED		
NOTE BOOK		
NO.		

ORIGINAL SURVEY	BY	DATE
SURVEYED		
PLOTTED		
TEMPLATE		
AREAS		
AREAS CHECKED		
NOTE BOOK		
NO.		

MODEL: US20_Cor-A_XSC
FILE NAME: pw:\\wsandh-pw.bentley.com:wsandh-pw01\Documents\Transportation\Projects\130959.000 US 20 Stockton\CAD\Design\Corridor Modeling\D264B40-Cor-US20-XS-A.dgn

RS&H

USER NAME = ElomquiM	DESIGNED - MMW	REVISED -
	DRAWN - EME	REVISED -
PLOT SCALE = 20.0000 ' / in.	CHECKED - MAW	REVISED -
PLOT DATE = 10/3/2022	DATE - 04/14/2020	REVISED -

STATE OF ILLINOIS
DEPARTMENT OF TRANSPORTATION

CROSS SECTIONS
US 20

SCALE: SHEET OF SHEETS STA. 1968+00.00 TO STA. 1969+00.00

F.A. RTE.	SECTION	COUNTY	TOTAL SHEETS	SHEET NO.
301	24R	JO DAVIESS	594	398
		CONTRACT NO. 64B40		
		ILLINOIS	FED. AID PROJECT	

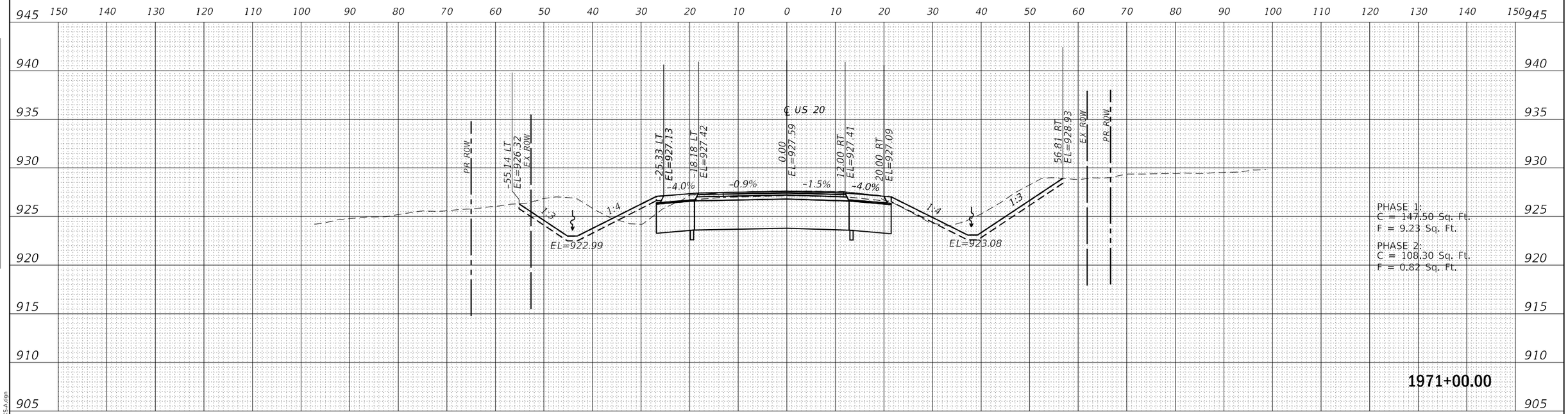

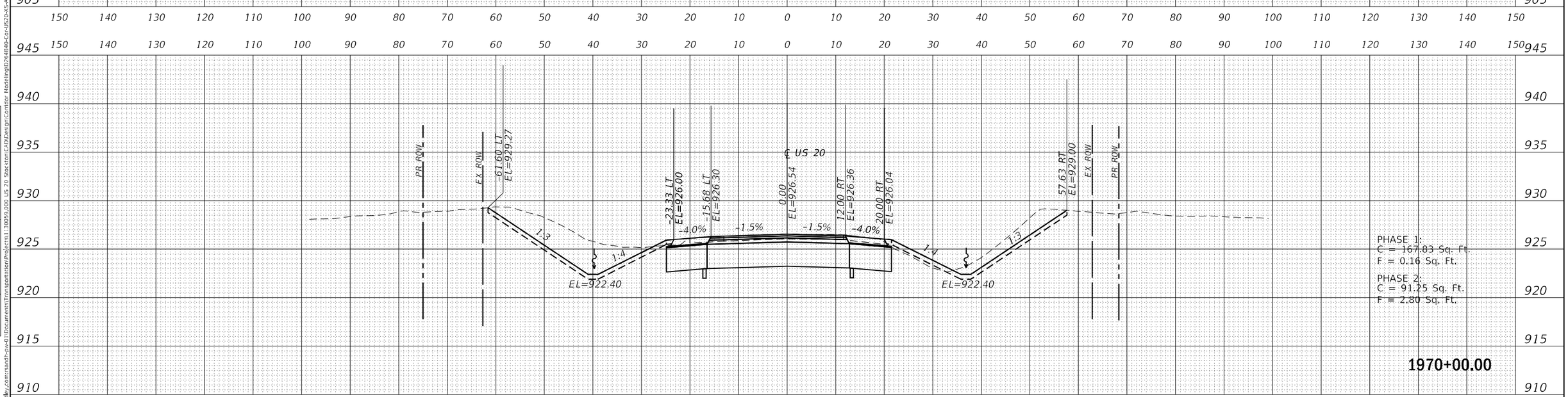

HORIZONTAL SCALE 0 10 20 30

VERTICAL SCALE 0 5 10 15

FINAL SURVEY	BY	DATE
SURVEYED		
PLOTTED		
TEMPLATE		
AREAS		
AREAS CHECKED		
NOTE BOOK NO.		

ORIGINAL SURVEY	BY	DATE
SURVEYED		
PLOTTED		
TEMPLATE		
AREAS		
AREAS CHECKED		
NOTE BOOK NO.		

MODEL: US20_Cor-A_XSC
FILE NAME: pw:\\rsandh-pw.bentley.com:rsandh-pw-01\Documents\Transportation\Projects\13059.000 US 20 Stockton\CAD\Design\Corridor Modeling\D264B40-Cor-US20-XSA.dgn

RS&H

USER NAME = BlomquiM	DESIGNED - MMW	REVISED -
	DRAWN - EME	REVISED -
PLOT SCALE = 20.0000 ' / in.	CHECKED - MAW	REVISED -
PLOT DATE = 10/3/2022	DATE - 04/14/2020	REVISED -

STATE OF ILLINOIS
DEPARTMENT OF TRANSPORTATION

CROSS SECTIONS
US 20

SCALE: SHEET OF SHEETS STA. 1970+00.00 TO STA. 1971+00.00

F.A. RTE.	SECTION	COUNTY	TOTAL SHEETS	SHEET NO.
301	24R	JO DAVIESS	594	399

CONTRACT NO. 64B40

ILLINOIS FED. AID PROJECT

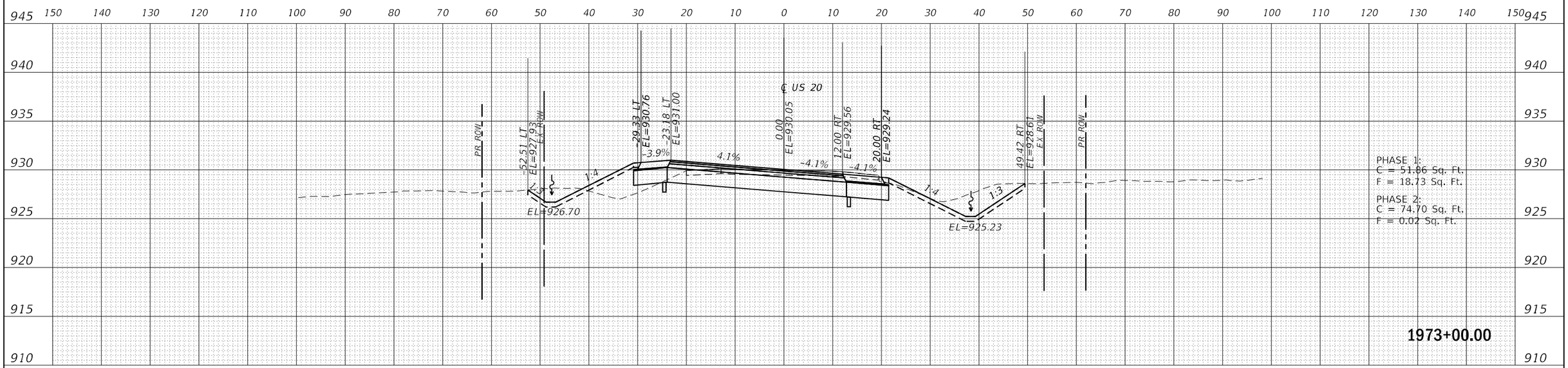

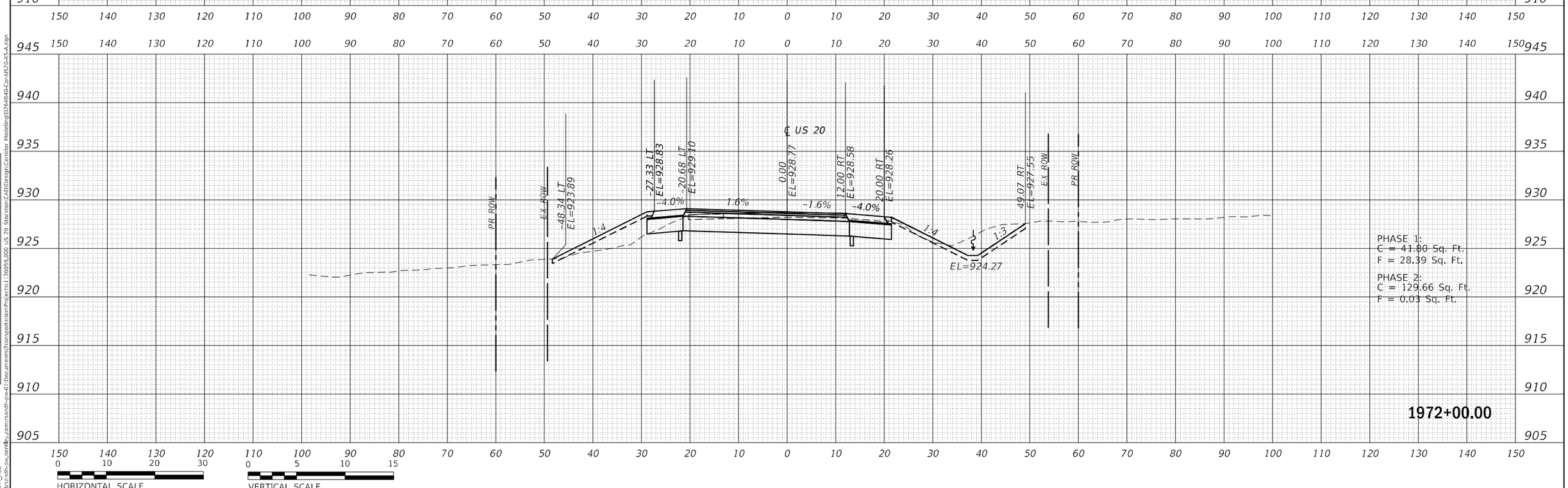

HORIZONTAL SCALE 0 10 20 30

VERTICAL SCALE 0 5 10 15

FINAL SURVEY		BY	DATE
NOTE BOOK	SURVEYED		
	PLOTTED		
	TEMPLATE		
	AREAS		
	AREAS CHECKED		
NO.			

ORIGINAL SURVEY		BY	DATE
NOTE BOOK	SURVEYED		
	PLOTTED		
	TEMPLATE		
	AREAS		
	AREAS CHECKED		
NO.			

MODEL: US20_CrsA_XSC
FILE NAME: pw:\\rsh-pw.bentley.com:rsandh-pw-01\Documents\Transportation\Projects\130059.000 US 20 Stockton\CAD\Design\Corridor Modeling\D2646B40-Cor-US20-XS-A.dgn

RS&H

USER NAME = BlomquiM	DESIGNED - MMW	REVISED -
	DRAWN - EME	REVISED -
PLOT SCALE = 20.0000 ' / in.	CHECKED - MAW	REVISED -
PLOT DATE = 10/3/2022	DATE - 04/14/2020	REVISED -

STATE OF ILLINOIS
DEPARTMENT OF TRANSPORTATION

CROSS SECTIONS
US 20

SCALE: SHEET OF SHEETS STA. 1972+00.00 TO STA. 1973+00.00

F.A. RTE.	SECTION	COUNTY	TOTAL SHEETS	SHEET NO.
301	24R	JO DAVIESS	594	400
		CONTRACT NO. 64B40		
		ILLINOIS	FED. AID PROJECT	