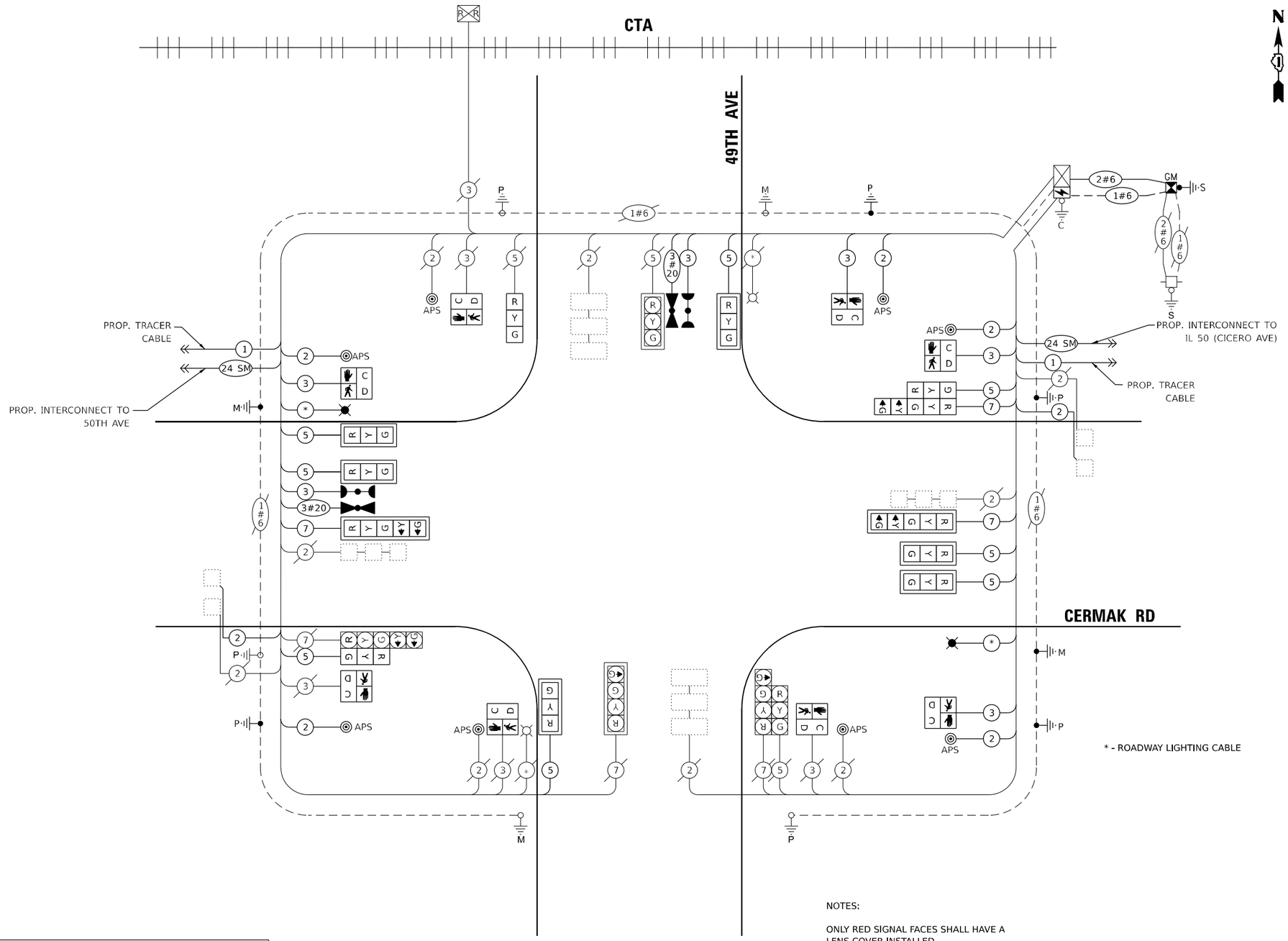

CABLE PLAN
(NOT TO SCALE)

NOTES:

ONLY RED SIGNAL FACES SHALL HAVE A LENS COVER INSTALLED.

THE SOFTWARE FOR THIS CONTROLLER SHALL BE ASC3.

TRAFFIC SIGNAL ELECTRICAL SERVICE REQUIREMENTS

EQUIPMENT TYPE	QUANTITY	UNIT WATTAGE	TOTAL WATTAGE
SIGNAL HEAD 1 OR 3-SECTION	11	11	121
4-SECTION	2	14	28
5-SECTION	4	13	52
PROGRAMMABLE 3-SECTION	-	22	-
4-SECTION	-	32	-
5-SECTION	-	28	-
PEDESTRIAN SIGNAL	8	15	120
CONTROLLER	1	150	150
MASTER CONTROLLER	-	100	-
UPS	1	25	25
DETECTION RADAR OR VIDEO	-	20	-
BLANK-OUT SIGN	-	25	-
NETWORK SWITCH II OR III	1	35	35
CELLULAR MODEM	-	15	-
TOTAL UPS SIZING			531
UPS CHARGING	1	225	225
BATTERY HEATER MAT	1	180	180
CABINET HEATER	1	200	200
FLASHER	-	15	-
LED STREET NAME SIGN	-	120	-
LUMINAIRE	4	240	960
TOTAL SERVICE WIRE SIZING			2096

ENERGY COSTS TO:
TOWN OF CICERO
4949 W CERMAK ROAD
CICERO, ILLINOIS 60804

ENERGY SUPPLY: CONTACT: ERICKA IRBY
PHONE: (779) 231-0633
COMPANY: COMED
ACCOUNT NUMBER: 86230-10157
METER NUMBER: ---

TS 12780
IDOT CENTRACS
FORMER ECON 108

TS SHT NO. 152
MODEL: $MODELNAMES
FILE NAME: D:\62N39-sht-TS152 CAB 49th Avenue.dgn

AMES Engineering, Inc.
CONSULTING ENGINEERS
6330 Belmont Road, Suite 4B
Downers Grove, IL 60516

USER NAME = msomer	DESIGNED - TM	REVISED -	
	DRAWN - TM, SR	REVISED -	
PLOT SCALE = $SCALE$	CHECKED - JAR	REVISED -	
PLOT DATE = 03/19/2025	DATE - 05/23/2024	REVISED -	

STATE OF ILLINOIS
DEPARTMENT OF TRANSPORTATION

CABLE PLAN
CERMAK RD AND 49TH AVE

SCALE: NTS | SHEET OF SHEETS | STA. TO STA.

F.A.U RTE.	SECTION	COUNTY	TOTAL SHEETS	SHEET NO.
1453	2020-266-SUR, SW & TS	COOK/DUPAGE	492	301
		CONTRACT NO. 62N39		
		ILLINOIS	FED. AID PROJECT	

SEQUENCE OF OPERATION

MOVEMENT		5 → ↑ ↓ 1				← – – → ← 6 ↓ 1			5 → ↑ 2 → ← – – →			← – – → ← 6 2 → ← – – →				↑ 4 ↓ ↑ 8 ↑				FLASH
PHASE		1 + 5				1 + 6			2 + 5			2 + 6				4 + 8				
INTERVAL		1	2	3	4	5	6	7	8	9	10	11	12	13A	13B	14	15	16A	16B	
CHANGE TO PHASE			1+6	2+5	2+6	~~0~~	~~0~~	2+6	~~0~~	~~0~~	2+6			4+8				1+5 1+6 2+5 2+6		
CERMAK ROAD FAR RIGHT MAST ARM SIGNAL	EB	R	R	R	R	R	R	R	G	G	G	G	G	Y	R	R	R	R	R	R
CERMAK ROAD END MAST ARM AND FAR LEFT SIGNALS	EB	R ◄ G	R ◄ Y	R ◄ G	R ◄ Y	R	R	R	G ◄ G	G ◄ G	G ◄ Y	G	G	Y	R	R	R	R	R	R
CERMAK ROAD FAR RIGHT MAST ARM SIGNAL	WB	R	R	R	R	G	G	G	R	R	R	G	G	Y	R	R	R	R	R	R
CERMAK ROAD END MAST ARM AND FAR LEFT SIGNALS	WB	R ◄ G	R ◄ G	R ◄ Y	R ◄ Y	G ◄ G	G ◄ G	G ◄ Y	R	R	R	G	G	Y	R	R	R	R	R	R
49TH AVENUE ALL SIGNALS	NB	R	R	R	R	R	R	R	R	R	R	R	R	R	R	G	G	Y	R	R
49TH AVENUE END MAST ARM AND FAR LEFT SIGNALS	SB	R	R	R	R	R	R	R	R	R	R	R	R	R	R	G	G	Y	R	R
PEDESTRIAN SIGNALS CROSSING 49TH AVENUE ON NORTH SIDE OF CERMAK ROAD		H	H	H	H	*P	**FH	H	H	H	H	*P	**FH	H	H	H	H	H	H	DARK
PEDESTRIAN SIGNALS CROSSING 49TH AVENUE ON SOUTH SIDE OF CERMAK ROAD		H	H	H	H	H	H	H	*P	**FH	H	*P	**FH	H	H	H	H	H	H	
PEDESTRIAN SIGNALS CROSSING CERMAK ROAD ON EAST SIDE OF 49TH AVENUE		H	H	H	H	H	H	H	H	H	H	H	H	H	H	*P	**FH	H	H	
PEDESTRIAN SIGNALS CROSSING CERMAK ROAD ON WEST SIDE OF 49TH AVENUE		H	H	H	H	H	H	H	H	H	H	H	H	H	H	*P	**FH	H	H	

* TO APPEAR ONLY UPON PUSHBUTTON ACTUATION

** FLASHING "✋" IS TO TERMINATE AT THE COMPLETION OF THE PEDESTRIAN INTERVAL CLEARANCE

~~0~~ THIS "🚶" OR FLASHING "✋" INTERVAL MAY FINISH TIMING IN THE BIDIRECTIONAL STRAIGHT THROUGH MOVEMENT IF THE LEFT ARROW TIME IS NOT SUFFICIENT TO COMPLETE "🚶" OR FLASHING "✋" INTERVALS

P = ILLUMINATED PERSON = WALK
FH = ILLUMINATED FLASHING HAND = FLASHING DON'T WALK
H = ILLUMINATED SOLID HAND = DON'T WALK

PHASE 2 AND 6 SHALL BE PLACED ON RECALL.

EMERGENCY VEHICLE PREEMPTION SEQUENCE OF OPERATION

																				PREEMPTOR NUMBER 3	PREEMPTOR NUMBER 4	
CHANGE FROM NORMAL SEQUENCE OF OPERATION INTERVAL NUMBER	1	5		5			8		8			11	11			14			14			CLEAR TO NORMAL SEQUENCE
EMERGENCY VEHICLE PREEMPTION SEQUENCE OF OPERATION INTERVAL NUMBER	1A	1B	1C	1D	1E	1F	1G	1H	1J	1K	1L	1M	1N	1P	1Q	1R	1S	1T	1U	2	3	
CHANGE TO EMERGENCY VEHICLE PREEMPTION SEQUENCE OF OPERATION INTERVAL NUMBER	2 OR 3	1C	2	1E	1F	3	1H	2	1K	1L	3	2	1P	1Q	3	1S	1T	2	3			◇
CERMAK ROAD FAR RIGHT MAST ARM SIGNAL	EB	R	R	R	R	R	G	G	G	Y	R	G	G	Y	R	R	R	R	R	G	R	◇
CERMAK ROAD END MAST ARM AND FAR LEFT SIGNALS	EB	R ◄ Y	R	R	R	R	G ◄ G	G ◄ Y	G ◄ G	Y	R	G	G	Y	R	R	R	R	R	G	R	◇
CERMAK ROAD FAR RIGHT MAST ARM SIGNAL	WB	R	G	G	G	Y	R	R	R	R	R	G	G	Y	R	R	R	R	R	G	R	◇
CERMAK ROAD END MAST ARM AND FAR LEFT SIGNALS	WB	R ◄ Y	G ◄ G	G ◄ Y	G ◄ G	Y	R	R	R	R	R	G	G	Y	R	R	R	R	R	G	R	◇
49TH AVENUE ALL SIGNALS	NB	R	R	R	R	R	R	R	R	R	R	R	R	R	R	G	Y	R	G	R	G	◇
49TH AVENUE END MAST ARM AND FAR LEFT SIGNALS	SB	R	R	R	R	R	R	R	R	R	R	R	R	R	R	G	Y	R	G	R	G	◇
PEDESTRIAN SIGNALS CROSSING 49TH AVENUE ON NORTH SIDE OF CERMAK ROAD		H	FH	H	FH	H	H	H	H	H	H	FH	FH	H	H	H	H	H	H	H	H	◇
PEDESTRIAN SIGNALS CROSSING 49TH AVENUE ON SOUTH SIDE OF CERMAK ROAD		H	H	H	H	H	H	FH	H	FH	H	H	FH	FH	H	H	H	H	H	H	H	◇
PEDESTRIAN SIGNALS CROSSING CERMAK ROAD ON EAST SIDE OF 49TH AVENUE		H	H	H	H	H	H	H	H	H	H	H	H	H	H	H	FH	H	H	FH	H	H	◇
PEDESTRIAN SIGNALS CROSSING CERMAK ROAD ON WEST SIDE OF 49TH AVENUE		H	H	H	H	H	H	H	H	H	H	H	H	H	H	H	FH	H	H	FH	H	H	◇

◇ EMERGENCY VEHICLE SEQUENCE SHALL PROVIDE THE PROPER CLEARANCE INTERVAL TO RESUME THE NORMAL SEQUENCE OF OPERATION OR PROPER CLEARANCE INTERVAL TO DISPLAY A DIFFERENT EMERGENCY INTERVAL AFTER EMERGENCY VEHICLE INTERVAL 2 OR 3 IS TERMINATED.

TS 12775
IDOT CENTRACS
FORMER ECON 108

TS SHT NO. 153

MODEL: $MODELNAME$
FILE NAME: D162N39-sht-TS153 SEQ1 49th Avenue.dgn

AMES Engineering, Inc.
CONSULTING ENGINEERS
6330 Belmont Road, Suite 4B
Downers Grove, IL 60516

USER NAME = msomer	DESIGNED - TM	REVISED -	
	DRAWN - TM, SR	REVISED -	
PLOT SCALE = $SCALE$	CHECKED - JAR	REVISED -	
PLOT DATE = 03/19/2025	DATE - 05/23/2024	REVISED -	

STATE OF ILLINOIS
DEPARTMENT OF TRANSPORTATION

SEQUENCE OF OPERATION AND EMERGENCY VEHICLE PREEMPTION
SEQUENCE OF OPERATION
CERMAK RD AND 49TH AVE

SCALE: NTS | SHEET OF SHEETS | STA. TO STA.

F.A.U RTE.	SECTION	COUNTY	TOTAL SHEETS	SHEET NO.
1453	2020-266-SUR, SW & TS	COOK/DUPAGE	492	302
		CONTRACT NO. 62N39		
		ILLINOIS	FED. AID PROJECT	

RAILROAD PREEMPTION SEQUENCE OF OPERATION

										PREEMPTOR NUMBER 3		PREEMPTOR NUMBER 4		PREEMPTOR NUMBER 2				
CHANGE FROM NORMAL SEQUENCE OF OPERATION INTERVAL NUMBER	1	5		8		11		14										
CHANGE FROM EMERGENCY VEHICLE PREEMPTION SEQUENCE OF OPERATION INTERVAL NUMBER										2		3						
RAILROAD PREEMPTION SEQUENCE OF OPERATION INTERVAL NUMBER	1A	1B	1C	1D	1E	1F	1G	1H	1J	1K	1L	1M	1N	2	3	4	5	CLEAR TO NORMAL SEQUENCE
CHANGE TO RAILROAD PREEMPTION SEQUENCE OF OPERATION INTERVAL NUMBER	2	1C	2	1E	2	1G	2	1J	2	1L	2	1N	2	3	4	5		
CERMAK ROAD EB FAR RIGHT MAST ARM SIGNAL	R	R	R	Y	R	Y	R	R	R	Y	R	R	R	R	R	R	G	△
CERMAK ROAD EB END MAST ARM AND FAR LEFT SIGNALS	R ◄Y	R	R	Y	R	Y	R	R	R	Y	R	R	R	R	R	R	G	△
CERMAK ROAD WB FAR RIGHT MAST ARM SIGNAL	R	Y	R	R	R	Y	R	R	R	Y	R	R	R	R	R	R	G	△
CERMAK ROAD WB END MAST ARM AND FAR LEFT SIGNALS	R ◄Y	Y	R	R	R	Y	R	R	R	Y	R	R	R	R	R	R	G	△
49TH AVENUE NB ALL SIGNALS	R	R	R	R	R	R	R	Y	R	R	R	Y	R	R	R	R	R	△
49TH AVENUE SB END MAST ARM AND FAR LEFT SIGNALS	R	R	R	R	R	R	R	G	G	R	R	G	G	G ◄G	Y	R	R	△
PEDESTRIAN SIGNALS CROSSING 49TH AVENUE ON NORTH SIDE OF CERMAK ROAD	H	FH	H	H	H	FH	H	H	H	H	H	H	H	H	H	H	H	△
PEDESTRIAN SIGNALS CROSSING 49TH AVENUE ON SOUTH SIDE OF CERMAK ROAD	H	H	H	FH	H	FH	H	H	H	H	H	H	H	H	H	H	H	△
PEDESTRIAN SIGNALS CROSSING CERMAK ROAD ON EAST SIDE OF 49TH AVENUE	H	H	H	H	H	H	H	FH	H	H	H	H	H	H	H	H	H	△
PEDESTRIAN SIGNALS CROSSING CERMAK ROAD ON WEST SIDE OF 49TH AVENUE	H	H	H	H	H	H	H	FH	H	H	H	H	H	H	H	H	H	△
																	HOLD	

△ RAILROAD PREEMPTION SEQUENCE SHALL PROVIDE THE PROPER CLEARANCE INTERVAL TO RESUME THE NORMAL SEQUENCE OF OPERATIONS OR PROPER CLEARANCE INTERVAL TO DISPLAY AN EMERGENCY VEHICLE INTERVAL (IF APPLICABLE) AFTER RAILROAD PREEMPTION INTERVAL 5 IS TERMINATED.

TS 12775
IDOT CENTRACS
FORMER ECON 108

TS SHT NO. 154

MODEL: $MODELNAME$
FILE NAME: D162N39-sht-TS154 SEQ2 49th Avenue.dgn

AMES Engineering, Inc.
CONSULTING ENGINEERS
6330 Belmont Road, Suite 4B
Downers Grove, IL 60516

USER NAME = msomer	DESIGNED - TM	REVISED -	
	DRAWN - TM, SR	REVISED -	
PLOT SCALE = $SCALE$	CHECKED - JAR	REVISED -	
PLOT DATE = 03/19/2025	DATE - 05/23/2024	REVISED -	

STATE OF ILLINOIS
DEPARTMENT OF TRANSPORTATION

RAILROAD PREEMPTION SEQUENCE OF OPERATION
CERMAK RD AND 49TH AVE

SCALE: NTS | SHEET OF SHEETS | STA. TO STA.

F.A.U RTE.	SECTION	COUNTY	TOTAL SHEETS	SHEET NO.
1453	2020-266-SUR, SW & TS	COOK/DUPAGE	492	303
		CONTRACT NO. 62N39		
	ILLINOIS	FED. AID PROJECT		

SIGN PANEL – TYPE 1 OR TYPE 2

ALL DIMENSIONS ARE IN INCHES UNLESS NOTED OTHERWISE

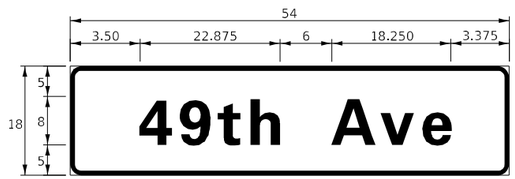

DESIGN SERIES	AREA (SQ FT)	SIGN PANEL TYPE	SHEETING TYPE	QTY. REQUIRED
D	6.75	1	ZZ	2

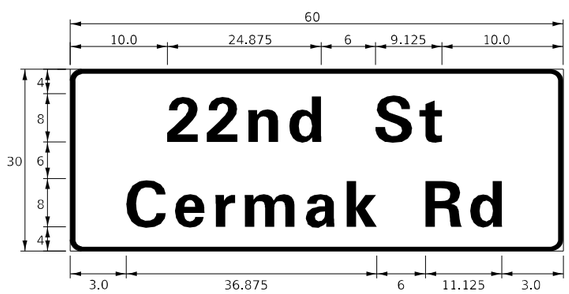

DESIGN SERIES	AREA (SQ FT)	SIGN PANEL TYPE	SHEETING TYPE	QTY. REQUIRED
D	12.5	2	ZZ	2

NOTE: FOR ADDITIONAL DESIGN AND INSTALLATION INFORMATION PLEASE SEE DISTRICT ONE MAST ARM MOUNTED STREET NAME SIGNS DETAIL.

SCHEDULE OF QUANTITIES

	ITEM DESCRIPTION	UNITS	TOTAL QTY.
	SIGN PANEL - TYPE 1	SQ FT	14
	SIGN PANEL - TYPE 2	SQ FT	25
	UNDERGROUND CONDUIT, GALVANIZED STEEL, 2" DIA.	FOOT	51
	UNDERGROUND CONDUIT, GALVANIZED STEEL, 3" DIA.	FOOT	13
	UNDERGROUND CONDUIT, GALVANIZED STEEL, 4" DIA.	FOOT	243
	HANDHOLE	EACH	1
	LUMINAIRE, LED, ROADWAY, DESIGNATION H	EACH	2
	MAINTENANCE OF EXISTING TRAFFIC SIGNAL INSTALLATION	EACH	1
	ELECTRIC CABLE IN CONDUIT, SIGNAL NO. 14 2C	FOOT	782
	ELECTRIC CABLE IN CONDUIT, SIGNAL NO. 14 3C	FOOT	789
	ELECTRIC CABLE IN CONDUIT, SIGNAL NO. 14 5C	FOOT	1573
	ELECTRIC CABLE IN CONDUIT, SIGNAL NO. 14 7C	FOOT	515
	ELECTRIC CABLE IN CONDUIT, LEAD-IN, NO. 14 1 PAIR	FOOT	829
	ELECTRIC CABLE IN CONDUIT, SERVICE, NO. 6 2C	FOOT	40
	ELECTRIC CABLE IN CONDUIT, EQUIPMENT GROUNDING CONDUCTOR, NO. 6 1C	FOOT	807
	TRAFFIC SIGNAL POST, 16 FT.	EACH	2
	STEEL COMBINATION MAST ARM ASSEMBLY AND POLE 48 FT.	EACH	1
	STEEL COMBINATION MAST ARM ASSEMBLY AND POLE 50 FT.	EACH	1
	CONCRETE FOUNDATION, TYPE A	FOOT	8
	CONCRETE FOUNDATION, TYPE E 36-INCH DIAMETER	FOOT	28
	DRILL EXISTING HANDHOLE	EACH	6
	SIGNAL HEAD, LED, 1-FACE, 3-SECTION, MAST ARM MOUNTED	EACH	6
	SIGNAL HEAD, LED, 1-FACE, 3-SECTION, BRACKET MOUNTED	EACH	3
	SIGNAL HEAR, LED, 1-FACE, 5-SECTION, BRACKET MOUNTED	EACH	1
	SIGNAL HEAD, LED, 1-FACE, 5-SECTION, MAST ARM MOUNTED	EACH	2
	PEDESTRIAN SIGNAL HEAD, L.E.D., 1-FACE, BRACKET MOUNTED WITH COUNTDOWN TIMER	EACH	8
	TRAFFIC SIGNAL BACKPLATE, LOUVERED, FORMED PLASTIC	EACH	8
*	LIGHT DETECTOR	EACH	2
*	LIGHT DETECTOR AMPLIFIER	EACH	1
	REMOVE ELECTRIC CABLE FROM CONDUIT	FOOT	3204
	REMOVE EXISTING TRAFFIC SIGNAL EQUIPMENT	EACH	1
	REMOVE EXISTING CONCRETE FOUNDATION	EACH	4
*	EMERGENCY VEHICLE PRIORITY SYSTEM LINE SENSOR CABLE, NO. 20 3/C	FOOT	253
	SERVICE INSTALLATION, GROUND MOUNTED, METERED	EACH	1
	LAYER II (DATALINK) SWITCH	EACH	1
	UPGRADE EXISTING CONTROLLER TO NTCIP SPECIAL	EACH	1
	PEDESTRIAN SIGNAL POST, 10 FT.	EACH	2
	PEDESTRIAN SIGNAL POST, 5'	EACH	1
	REMOVE AND REPLACE BATTERIES FOR UNINTERRUPTABLE POWER SUPPLY, EXTENDED	EACH	1
	ACCESSIBLE PEDESTRIAN SIGNALS	EACH	8
	CONCRETE FOUNDATION, TYPE A, 12-INCH DIAMETER	FOOT	12
	LED SIGNAL FACE, LENS COVER	EACH	17
	CENTRACS LICENSE EXPANSION	EACH	1
	FIBER OPTIC INTERCONNECT CENTER, 48 PORT	EACH	1
	LED SIGNAL MODULE REPLACEMENT	EACH	5

* - 100% COST TO TOWN OF CICERO

TS 12775
IDOT CENTRACS
FORMER ECON 108

TS SHT NO. 155

MODEL: $MODELNAME$
FILE NAME: D162N39-sht-TS155-STN 49th Avenue.dgn

AMES Engineering, Inc.
CONSULTING ENGINEERS
6330 Belmont Road, Suite 4B
Downers Grove, IL 60516

USER NAME = msomer	DESIGNED - TM	REVISED -	
	DRAWN - TM, SR	REVISED -	
PLOT SCALE = $SCALE$	CHECKED - JAR	REVISED -	
PLOT DATE = 03/19/2025	DATE - 05/23/2024	REVISED -	

STATE OF ILLINOIS
DEPARTMENT OF TRANSPORTATION

MAST ARM MOUNTED STREET NAME SIGNS
AND SCHEDULE OF QUANTITIES
CERMAK RD AND 49TH AVE

SCALE: NTS | SHEET 1 OF 1 SHEETS | STA. TO STA.

F.A.U RTE.	SECTION	COUNTY	TOTAL SHEETS	SHEET NO.
1453	2020-266-SUR, SW & TS	COOK/DUPAGE	492	304
		CONTRACT NO. 62N39		
		ILLINOIS	FED. AID PROJECT	

CONSTRUCTION NOTES:

1. INSTALL NEW CONTROLLER IN EXISTING CABINET. THE CONTROLLER SHALL MEET RAILROAD REQUIREMENTS.
2. INSTALL A REMOTE-CONTROLLED VIDEO SYSTEM ON THE CAMERA MOUNTING ASSEMBLY.
3. THE SOFTWARE FOR THIS CONTROLLER SHALL BE ASC3.
4. THIS INTERSECTION SHALL REMAIN ON IDOT CLOSED SYSTEM ECON 108.

NOTES:

1) THE EXISTING TRAFFIC SIGNAL EQUIPMENT SHALL NOT BE REMOVED UNTIL THE PROPOSED TRAFFIC SIGNAL EQUIPMENT IS FULLY OPERATIONAL.

2) ALL EXISTING TRAFFIC SIGNAL CABLE NO LONGER REQUIRED SHALL BE REMOVED.

3) ALL PROPOSED TRAFFIC SIGNAL CABLE SHALL BE ROUTED THROUGH THE PROPOSED CONDUIT.

4) A SEPARATE LEAD-IN CABLE SHALL BE INSTALLED FOR THE DETECTOR LOOPS ON THE EB CERMAK RD INSIDE THROUGH LANE AND ON THE WB CERMAK INSIDE THROUGH LANE.

5) THERE SHALL BE A MINIMUM OF 4' SIDEWALK CLEARANCE IN FRONT/ BEHIND OF THE TRAFFIC SIGNAL FOUNDATIONS TO BE ADA COMPLIANT.

6) ALL PROPOSED PUSHBUTTONS SHALL BE APS.

7) THIS LOCATION HAS BEEN DESIGNED TO BE ADA COMPLIANT. ANY DEVIATION FROM THIS PLAN FOR THE POSTS THAT HAVE PEDESTRIAN EQUIPMENT WILL HAVE TO BE APPROVED BY THE ENGINEER TO ENSURE ADA COMPLIANCE.

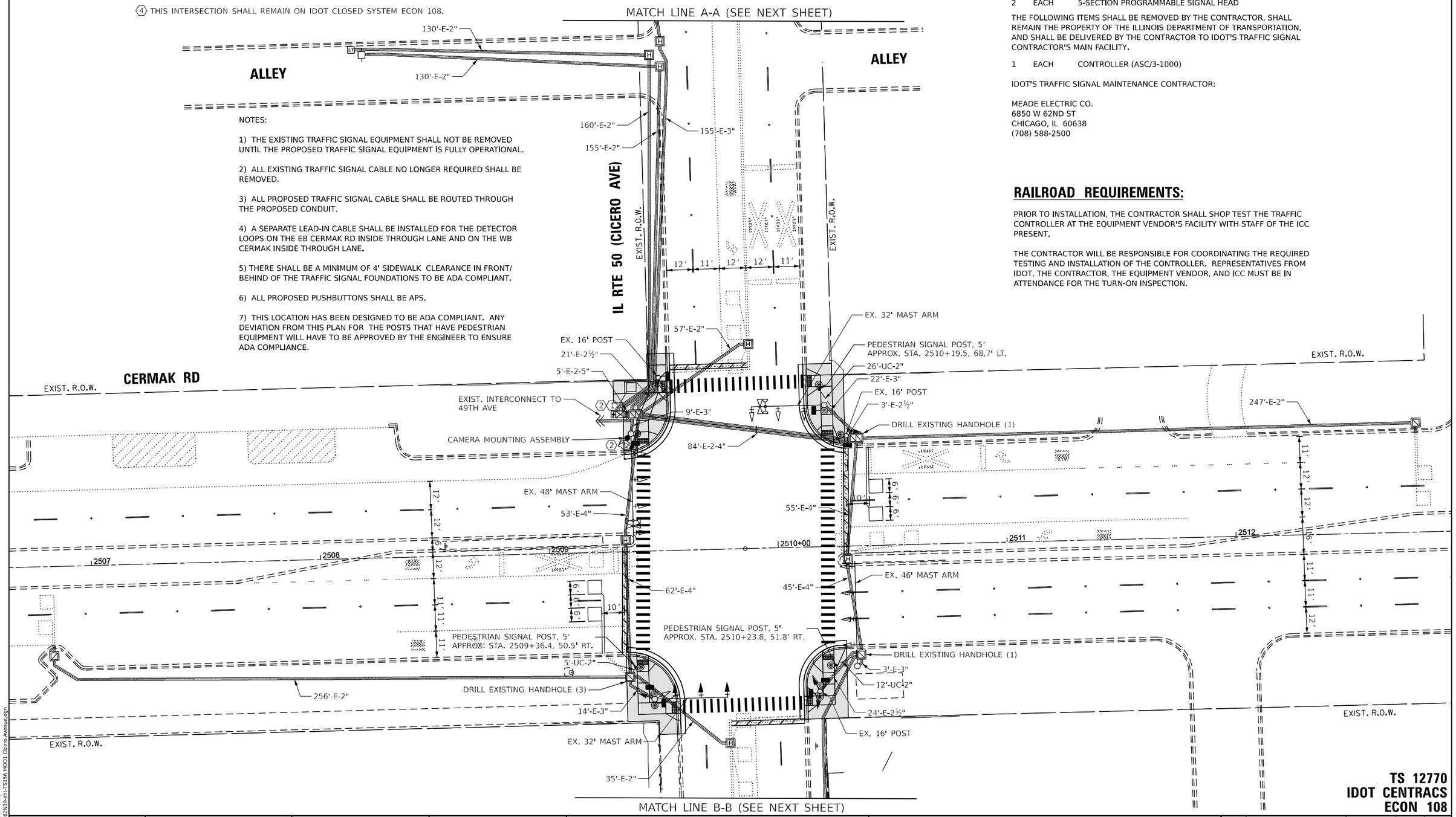

REMOVAL AND RELOCATION NOTES:

THE FOLLOWING ITEMS SHALL BE REMOVED BY THE CONTRACTOR AND SHALL BE DISPOSED OF BY THEM OUTSIDE THE RIGHT-OF-WAY AT THEIR EXPENSE. THE SALVAGE VALUE OF THE REMOVED EQUIPMENT SHALL BE REFLECTED IN THE CONTRACT BID PRICE.

8	EACH	PEDESTRIAN SIGNAL HEAD
6	EACH	PEDESTRIAN PUSHBUTTON
2	EACH	3-SECTION PROGRAMMABLE SIGNAL HEAD
2	EACH	5-SECTION PROGRAMMABLE SIGNAL HEAD

THE FOLLOWING ITEMS SHALL BE REMOVED BY THE CONTRACTOR, SHALL REMAIN THE PROPERTY OF THE ILLINOIS DEPARTMENT OF TRANSPORTATION, AND SHALL BE DELIVERED BY THE CONTRACTOR TO IDOT'S TRAFFIC SIGNAL CONTRACTOR'S MAIN FACILITY.

1	EACH	CONTROLLER (ASC/3-1000)

IDOT'S TRAFFIC SIGNAL MAINTENANCE CONTRACTOR:

MEADE ELECTRIC CO.
6850 W 62ND ST
CHICAGO, IL 60638
(708) 588-2500

RAILROAD REQUIREMENTS:

PRIOR TO INSTALLATION, THE CONTRACTOR SHALL SHOP TEST THE TRAFFIC CONTROLLER AT THE EQUIPMENT VENDOR'S FACILITY WITH STAFF OF THE ICC PRESENT.

THE CONTRACTOR WILL BE RESPONSIBLE FOR COORDINATING THE REQUIRED TESTING AND INSTALLATION OF THE CONTROLLER. REPRESENTATIVES FROM IDOT, THE CONTRACTOR, THE EQUIPMENT VENDOR, AND ICC MUST BE IN ATTENDANCE FOR THE TURN-ON INSPECTION.

TS 12770
IDOT CENTRACS
ECON 108

TS SHT NO. 156

MODEL: $MODELNAME$
FILE NAME: D162N39-sht-TS156 MOD1 Cicero Avenue.dgn

AMES Engineering, Inc.
CONSULTING ENGINEERS
6330 Belmont Road, Suite 4B
Downers Grove, IL 60516

USER NAME = msomer	DESIGNED - TM	REVISED -	
	DRAWN - TM, SR	REVISED -	
PLOT SCALE = $SCALE$	CHECKED - JAR	REVISED -	
PLOT DATE = 03/19/2025	DATE - 05/23/2024	REVISED -	

STATE OF ILLINOIS
DEPARTMENT OF TRANSPORTATION

TRAFFIC SIGNAL MODIFICATION PLAN
CERMAK RD AND IL RTE 50 (CICERO AVE)

SCALE: 1" = 20' | SHEET OF SHEETS | STA. TO STA.

F.A.U RTE.	SECTION	COUNTY	TOTAL SHEETS	SHEET NO.
1453	2020-266-SUR, SW & TS	COOK/DUPAGE	492	305
		CONTRACT NO. 62N39		
		ILLINOIS	FED. AID PROJECT	

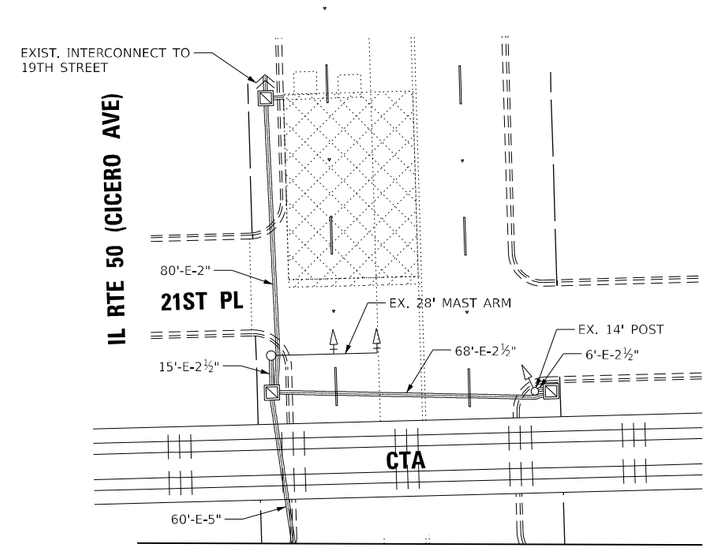

MATCH LINE A-A (SEE PREVIOUS SHEET)

N

MATCH LINE B-B (SEE PREVIOUS SHEET)

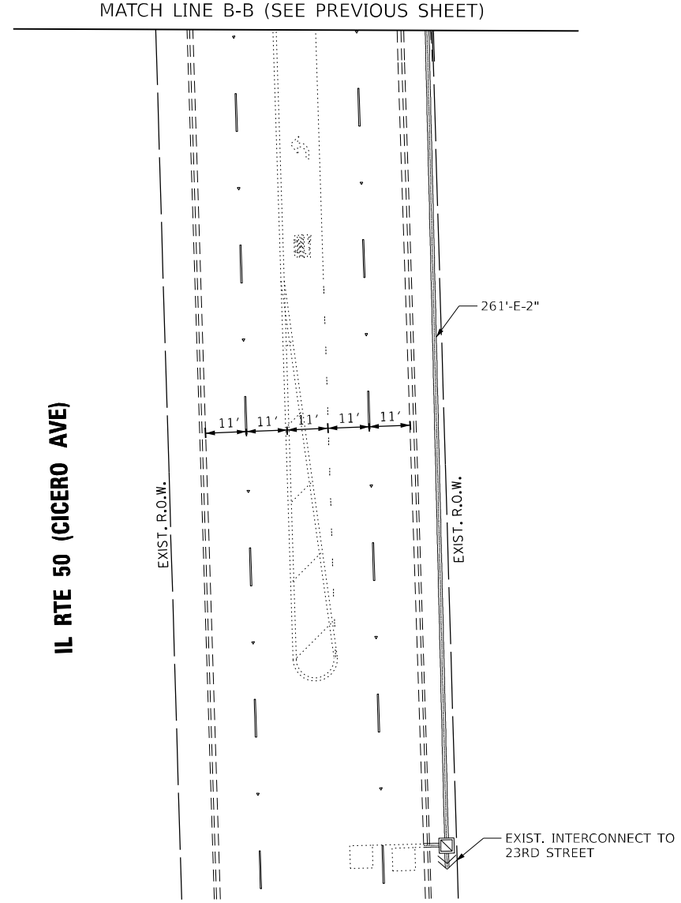

TS 12770
IDOT CENTRACS
ECON 108

TS SHT NO. 157

MODEL: $MODEL$NAME$
FILE NAME: D162N39-sht-TS157 MOD2 Cicero Avenue.dgn

AMES Engineering, Inc.
CONSULTING ENGINEERS
6330 Belmont Road, Suite 4B
Downers Grove, IL 60516

USER NAME = msomer	DESIGNED - TM	REVISED -	
	DRAWN - TM, SR	REVISED -	
PLOT SCALE = $SCALE$	CHECKED - JAR	REVISED -	
PLOT DATE = 03/19/2025	DATE - 05/23/2024	REVISED -	

STATE OF ILLINOIS
DEPARTMENT OF TRANSPORTATION

TRAFFIC SIGNAL MODIFICATION PLAN (SHEET 2 OF 2)
CERMAK ROAD AND IL RTE 50 (CICERO AVE)

SCALE: 1" = 20' | SHEET OF SHEETS | STA. TO STA.

F.A.U RTE.	SECTION	COUNTY	TOTAL SHEETS	SHEET NO.
1453	2020-266-SUR, SW & TS	COOK/DUPAGE	492	306
		CONTRACT NO. 62N39		
		ILLINOIS	FED. AID PROJECT	

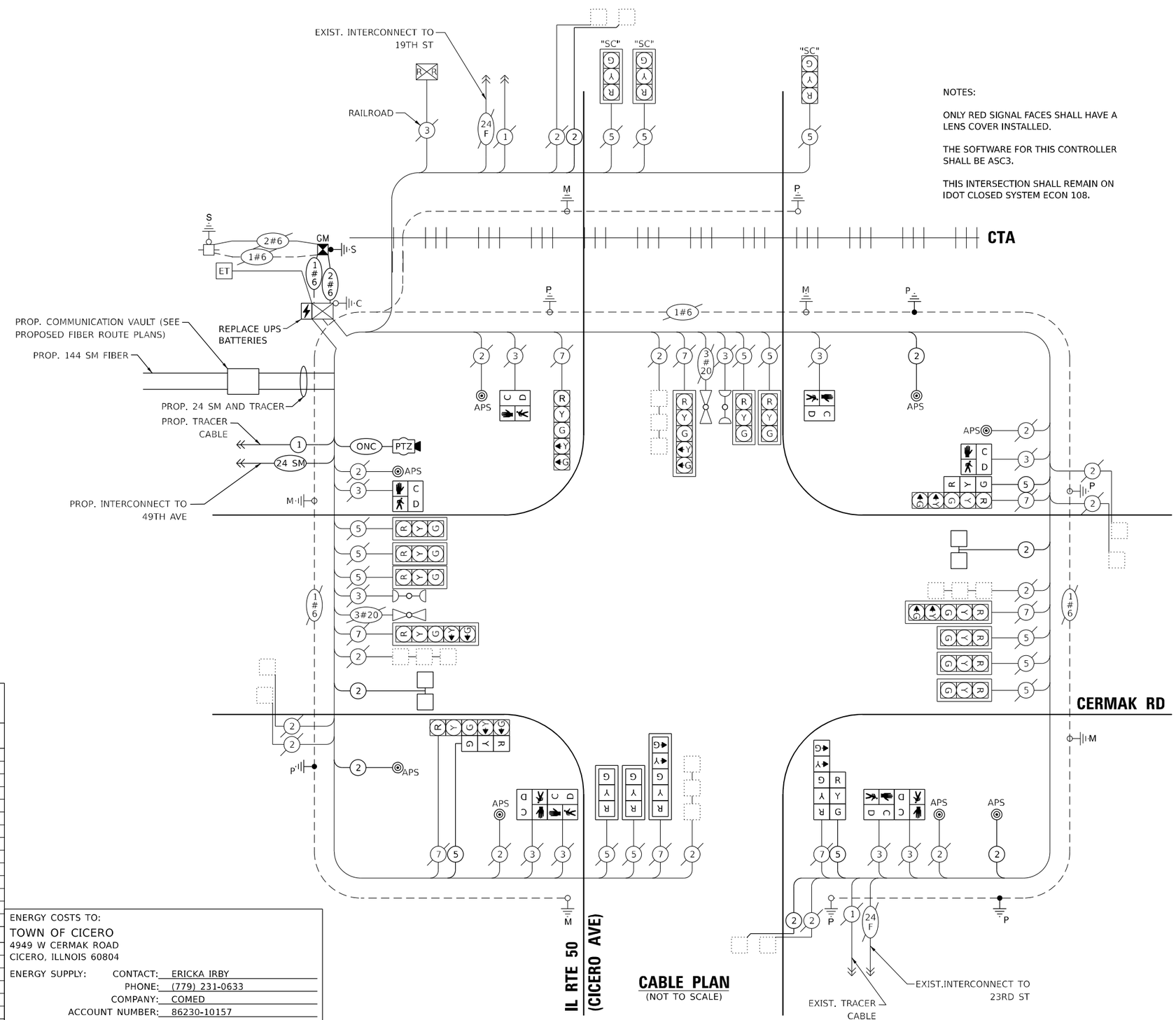

NOTES:

ONLY RED SIGNAL FACES SHALL HAVE A LENS COVER INSTALLED.

THE SOFTWARE FOR THIS CONTROLLER SHALL BE ASC3.

THIS INTERSECTION SHALL REMAIN ON IDOT CLOSED SYSTEM ECON 108.

CABLE PLAN
(NOT TO SCALE)

TRAFFIC SIGNAL ELECTRICAL SERVICE REQUIREMENTS

EQUIPMENT TYPE	QUANTITY	UNIT WATTAGE	TOTAL WATTAGE
SIGNAL HEAD 1 OR 3-SECTION	16	11	176
4-SECTION	-	14	-
5-SECTION	8	13	104
PROGRAMMABLE 3-SECTION	-	22	-
4-SECTION	-	32	-
5-SECTION	-	28	-
PEDESTRIAN SIGNAL	8	15	120
CONTROLLER	1	150	150
MASTER CONTROLLER	1	100	100
UPS	1	25	25
DETECTION RADAR OR VIDEO	-	20	-
BLANK-OUT SIGN	-	25	-
NETWORK SWITCH II OR III	1	35	35
PTZ CAMERA	1	75	75
TOTAL UPS SIZING			785
UPS CHARGING	1	225	225
BATTERY HEATER MAT	1	180	180
CABINET HEATER	1	200	200
FLASHER	-	15	-
LED STREET NAME SIGN	-	120	-
LUMINAIRE	-	240	-
TOTAL SERVICE WIRE SIZING			1390

ENERGY COSTS TO:
TOWN OF CICERO
4949 W CERMAK ROAD
CICERO, ILLINOIS 60804

ENERGY SUPPLY: CONTACT: ERICKA IRBY
PHONE: (779) 231-0633
COMPANY: COMED
ACCOUNT NUMBER: 86230-10157
METER NUMBER: ---

TS 12770
IDOT CENTRACS
ECON 108

TS SHT NO. 158

MODEL: $MODELNAME$
FILE NAME: D:\62N39-sh-TS158 CAB Cicero Avenue.dgn

AMES Engineering, Inc.
CONSULTING ENGINEERS
6330 Belmont Road, Suite 4B
Downers Grove, IL 60516

USER NAME = msomer	DESIGNED - TM	REVISED -	
	DRAWN - TM, SR	REVISED -	
PLOT SCALE = $SCALE$	CHECKED - JAR	REVISED -	
PLOT DATE = 03/19/2025	DATE - 05/23/2024	REVISED -	

STATE OF ILLINOIS
DEPARTMENT OF TRANSPORTATION

CABLE PLAN
CERMAK RD AND IL RTE 50 (CICERO AVE)

SCALE: NTS | SHEET OF SHEETS | STA. TO STA.

F.A.U RTE.	SECTION	COUNTY	TOTAL SHEETS	SHEET NO.
1453	2020-266-SUR, SW & TS	COOK/DUPAGE	492	307
		CONTRACT NO. 62N39		
		ILLINOIS	FED. AID PROJECT	

SEQUENCE OF OPERATION

MOVEMENT	1 5						6 1			5 2			6 2						7 3				8 3					7 4					8 4					
PHASE	1 + 5						1 + 6			2 + 5			2 + 6						3 + 7				3 + 8					4 + 7					4 + 8					FLASH
INTERVAL	1	2	3	4A	4B	4C	5	6	7	8	9	10	11	12	13A	13B	13C	13D	14	15	16	17	18	19	20A	20B	21	22	23	24A	24B	25	26	27	28A	28B		
CHANGE TO PHASE	/	1+6	2+5	2+6			ϴ /	ϴ /	2+6	ϴ /	ϴ /	2+6	/	/	3+7 3+8 4+7 4+8				/	3+8	4+7	1+5 1+6 2+5 2+6 4+8	ϴ /	ϴ /	1+5 1+6 2+5 2+6		4+8	ϴ /	ϴ /	1+5 1+6 2+5 2+6		4+8	/	/	1+5 1+6 2+5 2+6		
IL 50 (CICERO AVE.) NB FAR RIGHT AND MID MAST ARM SIGNALS	R	R	R	R	R	R	R	R	R	G	G	G	G	G	G	G	Y	R	R	R	R	R	R	R	R	R	R	R	R	R	R	R	R	R	R	R	R	R
IL 50 (CICERO AVE.) NB END MAST ARM AND FAR LEFT SIGNALS	R ◄G	R ◄Y	R ◄G	R ◄Y	R	R	R	R	R	G ◄G	G ◄G	G ◄Y	G	G	G	G	Y	R	R	R	R	R	R	R	R	R	R	R	R	R	R	R	R	R	R	R	R	R
IL 50 (CICERO AVE.) - (NORTH OF TRACKS) SB ALL SIGNALS	R	R	R	R	R	R	G	G	G	R	R	R	G	G	Y	R	R	R	R	R	R	R	R	R	R	R	R	R	R	R	R	R	R	R	R	R	R	R
IL 50 (CICERO AVE.) - (SOUTH OF TRACKS) SB FAR RIGHT AND MID MAST ARM SIGNALS	R	R	R	R	R	R	G	G	G	R	R	R	G	G	G	G	Y	R	R	R	R	R	R	R	R	R	R	R	R	R	R	R	R	R	R	R	R	R
IL 50 (CICERO AVE.) - (SOUTH OF TRACKS) SB END MAST ARM AND FAR LEFT SIGNALS	R ◄G	R ◄G	R ◄Y	R ◄G	R ◄G	R ◄Y	G ◄G	G ◄G	G ◄Y	R	R	R	G	G	G	G	Y	R	R	R	R	R	R	R	R	R	R	R	R	R	R	R	R	R	R	R	R	R
CERMAK ROAD - FAR RIGHT, EB MID RIGHT AND MID LEFT MAST ARM SIGNALS	R	R	R	R	R	R	R	R	R	R	R	R	R	R	R	R	R	R	R	R	R	R	R	R	R	R	R	G	G	Y	R	G	G	G	Y	R	R	R
CERMAK ROAD EB END MAST ARM AND FAR LEFT SIGNALS	R	R	R	R	R	R	R	R	R	R	R	R	R	R	R	R	R	R	R ◄G	R ◄Y	R ◄G	R ◄Y	R	R	R	R	R	G ◄G	G ◄G	Y	R	G ◄Y	G	G	Y	R	R	R
CERMAK ROAD - FAR RIGHT, WB MID RIGHT AND MID LEFT MAST ARM SIGNALS	R	R	R	R	R	R	R	R	R	R	R	R	R	R	R	R	R	R	R	R	R	R	G	G	Y	R	G	R	R	R	R	R	G	G	Y	R	R	R
CERMAK ROAD WB END MAST ARM AND FAR LEFT SIGNALS	R	R	R	R	R	R	R	R	R	R	R	R	R	R	R	R	R	R	R ◄G	R ◄G	R ◄Y	R ◄Y	G ◄G	G ◄G	Y	R	G ◄Y	R	R	R	R	R	G	G	Y	R	R	R
PEDESTRIAN SIGNALS CROSSING CERMAK ROAD ON EAST SIDE OF IL 50 (CICERO AVE.)	H	H	H	H	H	H	H	H	H	*P	**FH	H	*P	**FH	H	H	H	H	H	H	H	H	H	H	H	H	H	H	H	H	H	H	H	H	H	H	H	DARK
PEDESTRIAN SIGNALS CROSSING CERMAK ROAD ON WEST SIDE OF IL 50 (CICERO AVE.)	H	H	H	H	H	H	*P	**FH	H	H	H	H	*P	**FH	H	H	H	H	H	H	H	H	H	H	H	H	H	H	H	H	H	H	H	H	H	H	H	
PEDESTRIAN SIGNALS CROSSING IL 50 (CICERO AVE.) ON NORTH SIDE OF CERMAK ROAD	H	H	H	H	H	H	H	H	H	H	H	H	H	H	H	H	H	H	H	H	H	H	*P	**FH	H	H	H	H	H	H	H	H	*P	**FH	H	H		
PEDESTRIAN SIGNALS CROSSING IL 50 (CICERO AVE.) ON SOUTH SIDE OF CERMAK ROAD	H	H	H	H	H	H	H	H	H	H	H	H	H	H	H	H	H	H	H	H	H	H	H	H	H	H	H	*P	**FH	H	H	H	*P	**FH	H	H		

* TO APPEAR ONLY UPON PUSHBUTTON ACTUATION

** FLASHING "✋" IS TO TERMINATE AT THE COMPLETION OF THE PEDESTRIAN INTERVAL CLEARANCE

ϴ THIS "🚶" OR FLASHING "✋" INTERVAL MAY FINISH TIMING IN THE BIDIRECTIONAL STRAIGHT THROUGH MOVEMENT IF THE LEFT ARROW TIME IS NOT SUFFICIENT TO COMPLETE "🚶" OR FLASHING "✋" INTERVALS

P = ILLUMINATED PERSON = WALK
FH = ILLUMINATED FLASHING HAND = FLASHING DON'T WALK
H = ILLUMINATED SOLID HAND = DON'T WALK

PHASE 2 AND 6 SHALL BE PLACED ON RECALL.

◇ EMERGENCY VEHICLE SEQUENCE SHALL PROVIDE THE PROPER CLEARANCE INTERVAL TO RESUME THE NORMAL SEQUENCE OF OPERATION OR PROPER CLEARANCE INTERVAL TO DISPLAY A DIFFERENT EMERGENCY INTERVAL AFTER EMERGENCY VEHICLE INTERVAL 2 OR 3 IS TERMINATED.

EMERGENCY VEHICLE PREEMPTION SEQUENCE OF OPERATION

CHANGE FROM NORMAL SEQUENCE OF OPERATION INTERVAL NUMBER	1	1			5			5					8		8			11	11					14	18			18		22			22		22			22	PREEMPTOR NUMBER 3	PREEMPTOR NUMBER 4	CLEAR TO NORMAL SEQUENCE
EMERGENCY VEHICLE PREEMPTION SEQUENCE OF OPERATION INTERVAL NUMBER	1A	1B	1C	1D	1E	1F	1G	1H	1J	1K	1L	1M	1N	1P	1Q	1R	1S	1T	1U	1V	1W	1X	1Y	1Z	1AA	1BB	1CC	1DD	1EE	1FF	1GG	1HH	1JJ	1KK	1LL	1MM	1NN		2	3	
CHANGE TO EMERGENCY VEHICLE PREEMPTION SEQUENCE OF OPERATION INTERVAL NUMBER	2	1C	1D	3	1F	1G	2	1H	1J	1K	1L	3	1N	2	1Q	1R	3	2	1U	1V	1W	1X	3	2 OR 3	1AA	1BB	2	1DD	3	1FF	1GG	2	1JJ	3	1LL	1MM	2	3			◇
IL 50 (CICERO AVE.) NB FAR RIGHT AND MID MAST ARM SIGNALS	R	R	R	R	R	R	R	R	R	R	R	R	G	G	G	Y	R	G	G	G	G	Y	R	R	R	R	R	R	R	R	R	R	R	R	R	R	R	R	G	R	◇
IL 50 (CICERO AVE.) NB END MAST ARM AND FAR LEFT SIGNALS	R ◄Y	R ◄Y	R	R	R	R	R	R	R	R	R	R	G ◄G	G ◄Y	G ◄G	Y	R	G	G	G	G	Y	R	R	R	R	R	R	R	R	R	R	R	R	R	R	R	R	G	R	◇
IL 50 (CICERO AVE.) - (NORTH OF TRACKS) SB ALL SIGNALS	R	R	R	R	G	G	G	G	Y	R	R	R	R	R	R	R	R	G	G	Y	R	R	R	R	R	R	R	R	R	R	R	R	R	R	R	R	R	R	G	R	◇
IL 50 (CICERO AVE.) - (SOUTH OF TRACKS) SB FAR RIGHT AND MID MAST ARM SIGNALS	R	R	R	R	G	G	G	G	G	G	Y	R	R	R	R	R	R	G	G	G	G	Y	R	R	R	R	R	R	R	R	R	R	R	R	R	R	R	R	G	R	◇
IL 50 (CICERO AVE.) - (SOUTH OF TRACKS) SB END MAST ARM AND FAR LEFT SIGNALS	R ◄Y	R ◄G	R ◄G	R ◄Y	G ◄G	G ◄G	G ◄Y	G ◄G	G ◄G	G ◄G	Y	R	R	R	R	R	R	G	G	G	G	Y	R	R	R	R	R	R	R	R	R	R	R	R	R	R	R	R	G	R	◇
CERMAK ROAD - FAR RIGHT, EB MID RIGHT AND MID LEFT MAST ARM SIGNALS	R	R	R	R	R	R	R	R	R	R	R	R	R	R	R	R	R	R	R	R	R	R	R	R	R	R	R	R	R	G	Y	R	G	G	G	Y	R	G	R	G	◇
CERMAK ROAD EB END MAST ARM AND FAR LEFT SIGNALS	R	R	R	R	R	R	R	R	R	R	R	R	R	R	R	R	R	R	R	R	R	R	R	R ◄Y	R	R	R	R	R	G ◄G	Y	R	G ◄G	G ◄Y	G	Y	R	G	R	G	◇
CERMAK ROAD - FAR RIGHT, WB MID RIGHT AND MID LEFT MAST ARM SIGNALS	R	R	R	R	R	R	R	R	R	R	R	R	R	R	R	R	R	R	R	R	R	R	R	R	G	Y	R	G	G	R	R	R	R	R	G	Y	R	G	R	G	◇
CERMAK ROAD WB END MAST ARM AND FAR LEFT SIGNALS	R	R	R	R	R	R	R	R	R	R	R	R	R	R	R	R	R	R	R	R	R	R	R	R ◄Y	G ◄G	Y	R	G ◄G	G ◄Y	R	R	R	R	R	G	Y	R	G	R	G	◇
PEDESTRIAN SIGNALS CROSSING CERMAK ROAD ON EAST SIDE OF IL 50 (CICERO AVE.)	H	H	H	H	H	H	H	H	H	H	H	H	FH	H	FH	H	H	FH	FH	H	H	H	H	H	H	H	H	H	H	H	H	H	H	H	H	H	H	H	H	H	◇
PEDESTRIAN SIGNALS CROSSING CERMAK ROAD ON WEST SIDE OF IL 50 (CICERO AVE.)	H	H	H	H	FH	H	H	FH	H	H	H	H	H	H	H	H	H	FH	FH	H	H	H	H	H	H	H	H	H	H	H	H	H	H	H	H	H	H	H	H	◇
PEDESTRIAN SIGNALS CROSSING IL 50 (CICERO AVE.) ON NORTH SIDE OF CERMAK ROAD	H	H	H	H	H	H	H	H	H	H	H	H	H	H	H	H	FH	H	H	FH	H	H	H	H	FH	H	H	FH	H	H	H	H	H	H	FH	H	H	FH	H	H	◇
PEDESTRIAN SIGNALS CROSSING IL 50 (CICERO AVE.) ON SOUTH SIDE OF CERMAK ROAD	H	H	H	H	H	H	H	H	H	H	H	H	H	H	H	H	FH	H	H	FH	H	H	H	H	H	H	H	H	H	FH	H	H	FH	H	FH	H	H	FH	H	H	◇

TS 12770
IDOT CENTRACS
ECON 108

TS SHT NO. 159

MODEL: $MODELNAME$
FILE NAME: D162N39-sht-TS159 SEQ1 Cicero Avenue.dgn

AMES Engineering, Inc.
CONSULTING ENGINEERS
6330 Belmont Road, Suite 4B
Downers Grove, IL 60516

USER NAME = msomer	DESIGNED - TM	REVISED -	
	DRAWN - TM, SR	REVISED -	
PLOT SCALE = $SCALE$	CHECKED - JAR	REVISED -	
PLOT DATE = 03/19/2025	DATE - 05/23/2024	REVISED -	

STATE OF ILLINOIS
DEPARTMENT OF TRANSPORTATION

SEQUENCE OF OPERATION AND EMERGENCY VEHICLE PREEMPTION
SEQUENCE OF OPERATION
CERMAK RD AND IL RTE 50 (CICERO AVE)

SCALE: NTS | SHEET OF SHEETS | STA. TO STA.

F.A.U RTE.	SECTION	COUNTY	TOTAL SHEETS	SHEET NO.
1453	2020-266-SUR, SW & TS	COOK/DUPAGE	492	308
		CONTRACT NO. 62N39		
		ILLINOIS	FED. AID PROJECT	

RAILROAD PREEMPTION SEQUENCE OF OPERATION

															PREEMPTOR NUMBER 3		PREEMPTOR NUMBER 4		PREEMPTOR NUMBER 2					
CHANGE FROM NORMAL SEQUENCE OF OPERATION INTERVAL NUMBER	1	5		8		11		14	18		22		26											
CHANGE FROM EMERGENCY VEHICLE PREEMPTION SEQUENCE OF OPERATION INTERVAL NUMBER															2		3							
RAILROAD PREEMPTION SEQUENCE OF OPERATION INTERVAL NUMBER	1A	1B	1C	1D	1E	1F	1G	1H	1J	1K	1L	1M	1N	1P	1Q	1R	1S	1T	2	3	4	5	CLEAR TO NORMAL SEQUENCE	
CHANGE TO RAILROAD PREEMPTION SEQUENCE OF OPERATION INTERVAL NUMBER	2	1C	2	1E	2	1G	2	2	1K	2	1M	2	1P	2	1R	2	1T	2	3	4	5			
IL 50 (CICERO AVE.) NB FAR RIGHT AND MID MAST ARM SIGNALS	R	R	R	Y	R	Y	R	R	R	R	R	R	R	R	Y	R	R	R	R	R	R	R	△	
IL 50 (CICERO AVE.) NB END MAST ARM AND FAR LEFT SIGNALS	R ◄Y	R	R	Y	R	Y	R	R	R	R	R	R	R	R	Y	R	R	R	R	R	R	R	△	
IL 50 (CICERO AVE.) - (NORTH OF TRACKS) SB ALL SIGNALS	R	Y	R	R	R	Y	R	R	R	R	R	R	R	R	Y	R	R	R	R	R	R	R	△	
IL 50 (CICERO AVE.) - (SOUTH OF TRACKS) SB FAR RIGHT AND MID MAST ARM SIGNALS	R	G	G	R	R	G	G	R	R	R	R	R	R	R	G	G	R	R	G	Y	R	R	△	
IL 50 (CICERO AVE.) - (SOUTH OF TRACKS) SB END MAST ARM AND FAR LEFT SIGNALS	R ◄G	G ◄G	G ◄G	R	R	G	G	R	R	R	R	R	R	R	G	G	R	R	G ◄G	Y	R	R	△	
CERMAK ROAD - FAR RIGHT, EB MID RIGHT AND MID LEFT MAST ARM SIGNALS	R	R	R	R	R	R	R	R	R	R	Y	R	Y	R	R	R	Y	R	R	R	R	G	△	
CERMAK ROAD EB END MAST ARM AND FAR LEFT SIGNALS	R	R	R	R	R	R	R	R ◄Y	R	R	Y	R	Y	R	R	R	Y	R	R	R	R	G	△	
CERMAK ROAD - FAR RIGHT, WB MID RIGHT AND MID LEFT MAST ARM SIGNALS	R	R	R	R	R	R	R	R	Y	R	R	R	Y	R	R	R	Y	R	R	R	R	G	△	
CERMAK ROAD WB END MAST ARM AND FAR LEFT SIGNALS	R	R	R	R	R	R	R	R ◄Y	Y	R	R	R	Y	R	R	R	Y	R	R	R	R	G	△	
PEDESTRIAN SIGNALS CROSSING CERMAK ROAD ON EAST SIDE OF IL 50 (CICERO AVE.)	H	H	H	FH	H	FH	H	H	H	H	H	H	H	H	H	H	H	H	H	H	H	H	△	
PEDESTRIAN SIGNALS CROSSING CERMAK ROAD ON WEST SIDE OF IL 50 (CICERO AVE.)	H	FH	H	H	H	FH	H	H	H	H	H	H	H	H	H	H	H	H	H	H	H	H	△	
PEDESTRIAN SIGNALS CROSSING IL 50 (CICERO AVE.) ON NORTH SIDE OF CERMAK ROAD	H	H	H	H	H	H	H	H	FH	H	H	H	FH	H	H	H	H	H	H	H	H	H	△	
PEDESTRIAN SIGNALS CROSSING IL 50 (CICERO AVE.) ON SOUTH SIDE OF CERMAK ROAD	H	H	H	H	H	H	H	H	H	H	FH	H	FH	H	H	H	H	H	H	H	H	H	△	
																						HOLD		

△ RAILROAD PREEMPTION SEQUENCE SHALL PROVIDE THE PROPER CLEARANCE INTERVAL TO RESUME THE NORMAL SEQUENCE OF OPERATIONS OR PROPER CLEARANCE INTERVAL TO DISPLAY AN EMERGENCY VEHICLE INTERVAL (IF APPLICABLE) AFTER RAILROAD PREEMPTION INTERVAL 5 IS TERMINATED.

TS SHT NO. 160

MODEL: $MODELNAME$
FILE NAME: D:\62N39-sht-TS160 SEQ2 Cicero Avenue.dgn

TS 12770
IDOT CENTRACS
ECON 108

AMES Engineering, Inc.
CONSULTING ENGINEERS
6330 Belmont Road, Suite 4B
Downers Grove, IL 60516

USER NAME = msomer	DESIGNED - TM	REVISED -	
	DRAWN - TM, SR	REVISED -	
PLOT SCALE = $SCALE$	CHECKED - JAR	REVISED -	
PLOT DATE = 03/19/2025	DATE - 05/23/2024	REVISED -	

STATE OF ILLINOIS
DEPARTMENT OF TRANSPORTATION

RAILROAD PREEMPTION SEQUENCE OF OPERATION
CERMAK RD AND IL RTE 50 (CICERO AVE)

SCALE: NTS | SHEET OF SHEETS | STA. TO STA.

F.A.U RTE.	SECTION	COUNTY	TOTAL SHEETS	SHEET NO.
1453	2020-266-SUR, SW & TS	COOK/DUPAGE	492	309
		CONTRACT NO. 62N39		
		ILLINOIS	FED. AID PROJECT	

SCHEDULE OF QUANTITIES

ITEM DESCRIPTION	UNITS	TOTAL QTY.
UNDERGROUND CONDUIT, GALVANIZED STEEL, 2" DIA.	FOOT	43
MAINTENANCE OF EXISTING TRAFFIC SIGNAL INSTALLATION	EACH	1
ELECTRIC CABLE IN CONDUIT, SIGNAL NO. 14 2C	FOOT	564
ELECTRIC CABLE IN CONDUIT, SIGNAL NO. 14 5C	FOOT	589
ELECTRIC CABLE IN CONDUIT, LEAD-IN, NO. 14 1 PAIR	FOOT	1103
ELECTRIC CABLE IN CONDUIT, SERVICE, NO. 6 2C	FOOT	40
ELECTRIC CABLE IN CONDUIT, EQUIPMENT GROUNDING CONDUCTOR, NO. 6 1C	FOOT	465
CONCRETE OUNDATION, TYPE A	FOOT	4
DRILL EXISTING HANDHOLE	EACH	5
SIGNAL HEAD, LED, 1-FACE, 3-SECTION, MAST ARM MOUNTED	EACH	2
SIGNAL HEAD, LED, 1-FACE, 3-SECTION, BRACKET MOUNTED	EACH	3
SIGNAL HEAD, LED, 1-FACE, 5-SECTION, BRACKET MOUNTED	EACH	1
SIGNAL HEAD, LED, 1-FACE, 5-SECTION, MAST ARM MOUNTED	EACH	1
PEDESTRIAN SIGNAL HEAD, L.E.D., 1-FACE, BRACKET MOUNTED WITH COUNTDOWN TIMER	EACH	8
TRAFFIC SIGNAL BACKPLATE, LOUVERED, FORMED PLASTIC	EACH	3
INDUCTIVE LOOP DETECTOR	EACH	4
REMOVE EXISTING TRAFFIC SIGNAL EQUIPMENT	EACH	1
OUTDOOR RATED NETWORK CABLE	FOOT	79
SERVICE INSTALLATION, GROUND MOUNTED, METERED	EACH	1
REMOTE CONTROLLED VIDEO SYSTEM	EACH	1
PEDESTRIAN SIGNAL POST, 5 FT.	EACH	3
LAYER III (NETWORK) SWITCH	EACH	1
FULL-ACTUATED CONTROLLER IN EXISTING CABINET	EACH	1
REMOVE AND REPLACE BATTERIES FOR UNINTERRUPTABLE POWER SUPPLY, EXTENDED	EACH	1
ACCESSIBLE PEDESTRIAN SIGNALS	EACH	8
CONCRETE FOUNDATION, TYPE A, 12-INCH DIAMETER	FOOT	12
LED SIGNAL FACE, LENS COVER	EACH	24
CAMERA MOUNTING ASSEMBLY	EACH	1
CENTRACS LICENSE EXPANSION	EACH	1
FIBER OPTIC INTERCONNECT CENTER, 48 PORT	EACH	1
LED SIGNAL MODULE REPLACEMENT	EACH	17

TS 12770
IDOT CENTRACS
ECON 108

TS SHT NO. 161

MODEL: $MODELNAME$
FILE NAME: D162N39-sht-TS161-STH Cicero Avenue.dgn

AMES Engineering, Inc.
CONSULTING ENGINEERS
6330 Belmont Road, Suite 4B
Downers Grove, IL 60516

USER NAME = msomer	DESIGNED - TM	REVISED -	
	DRAWN - TM, SR	REVISED -	
PLOT SCALE = $SCALE$	CHECKED - JAR	REVISED -	
PLOT DATE = 03/19/2025	DATE - 05/23/2024	REVISED -	

STATE OF ILLINOIS
DEPARTMENT OF TRANSPORTATION

SCHEDULE OF QUANTITIES
CERMAK RD AND IL RTE 50 (CICERO AVE)

SCALE: NTS | SHEET 1 OF 1 SHEETS | STA. TO STA.

F.A.U RTE.	SECTION	COUNTY	TOTAL SHEETS	SHEET NO.
1453	2020-266-SUR, SW & TS	COOK/DUPAGE	492	310
		CONTRACT NO. 62N39		
		ILLINOIS	FED. AID PROJECT	

F.A.U. RTE.	SECTION	COUNTY	TOTAL SHEETS	SHEET NO.
*	89-00016-00-CH	DuPAGE	130	89

STA. 164+00 TO STA. 194+00

FED. ILLINOIS PROJ. STPM-6003 (840)

* 22nd ST. - 1453, YORK RD. - 2578

INTERCONNECT PLAN LEGEND

	PROPOSED	EXISTING
CONTROLLER		
HANDHOLE	H	H
DOUBLE HANDHOLE	DH	DH
HEAVY DUTY HANDHOLE	HD	HD
G.S. CONDUIT IN TRENCH OR PUSHED		
DETECTOR LOOP		
COMMON TRENCH	CT	
UNIT DUCT	UD	
SYSTEM	S	
INTERSECTION	IP	I

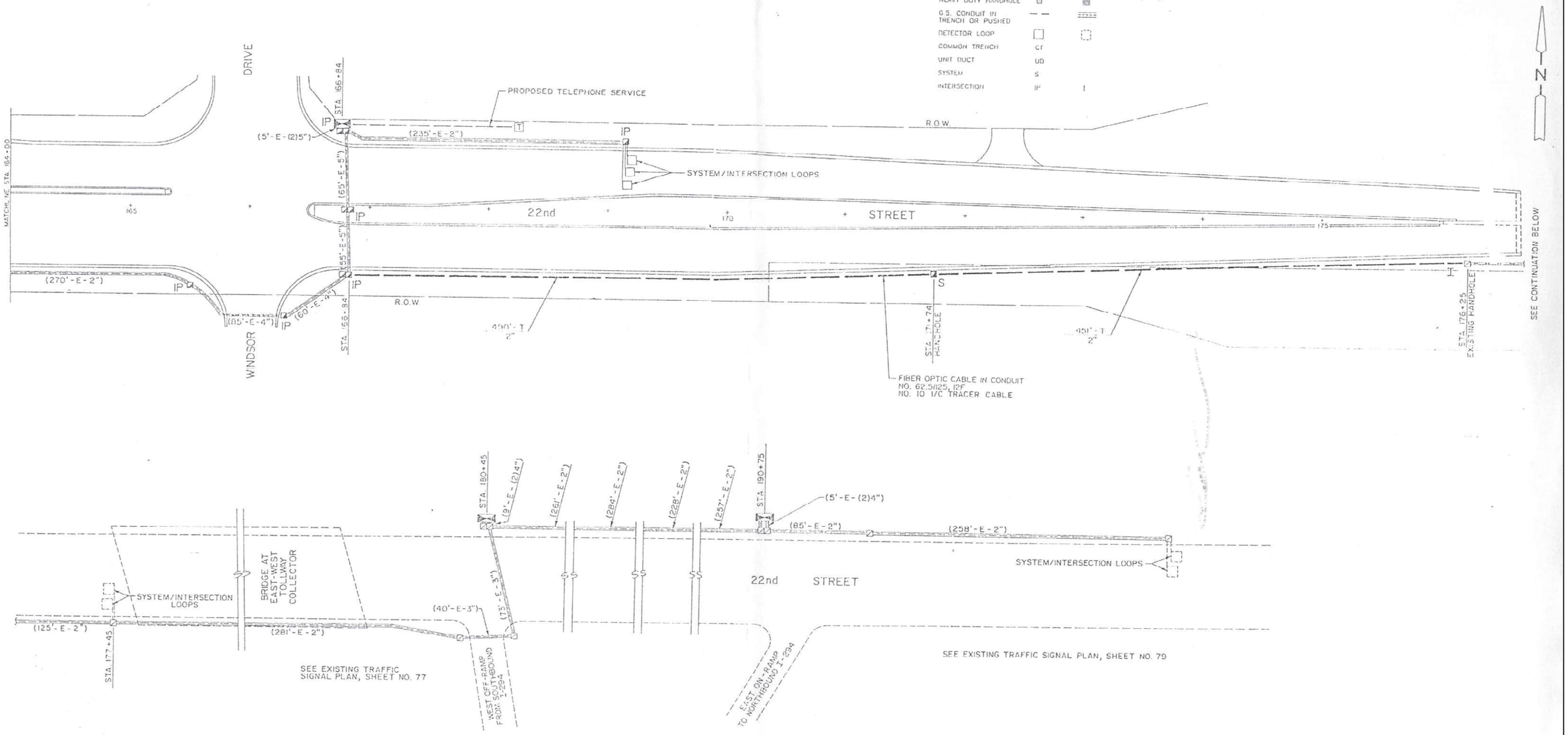

FOR INFORMATION ONLY

TS SHT NO. 162

MODEL: $MODELNAME$
FILE NAME: D162N39-sht-TS162-INTERCONNECT.dgn

AMES Engineering, Inc.
CONSULTING ENGINEERS
6330 Belmont Road, Suite 4B
Downers Grove, IL 60516

USER NAME = msomer	DESIGNED - MA, MA	REVISED -	
	DRAWN - MA, MA, MD, SR	REVISED -	
PLOT SCALE = $SCALE$	CHECKED - JAM, AS	REVISED -	
PLOT DATE = 03/19/2025	DATE - 11/08/2024	REVISED -	

STATE OF ILLINOIS
DEPARTMENT OF TRANSPORTATION

INTERCONNECT PLAN
CERMAK ROAD

SCALE: NTS | SHEET 1 OF 1 SHEETS | STA. | TO STA.

F.A. RTE.	SECTION	COUNTY	TOTAL SHEETS	SHEET NO.
771	2020-266-SUR, SW & TS	COOK, DUPAGE	492	311

CONTRACT NO. 62N39

ILLINOIS | FED. AID PROJECT

FAP RTE.	SECTION	COUNTY	TOTAL SHEETS	SHEET NO.
330	91B-BR	COOK	70	37
STA.		TO STA.		
FED. ROAD DIST. NO.		ILLINOIS	FED. AID PROJECT	

D-91-261-96

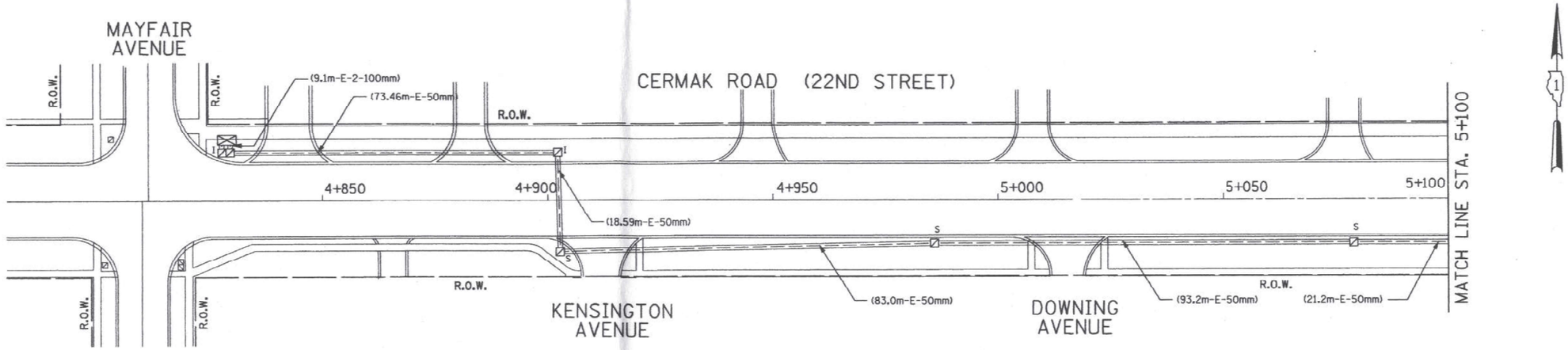

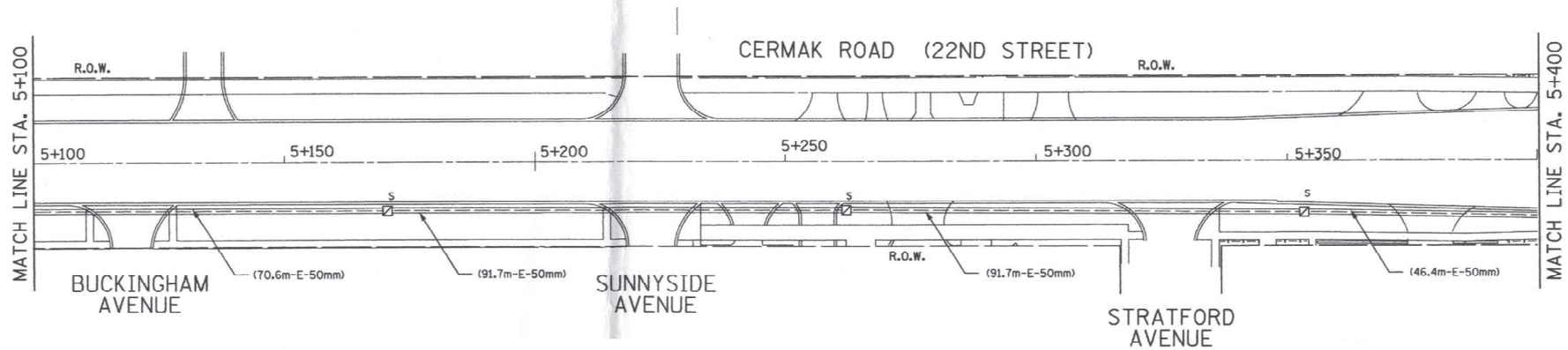

INTERCONNECT PLAN LEGEND

	PROPOSED	EXISTING
CONTROLLER		
HANDHOLE		
HEAVY DUTY HANDHOLE		"E"
DOUBLE HANDHOLE		
GALVANIZED STEEL CONDUIT IN TRENCH OR PUSHED		
DETECTOR LOOP		
COMMON TRENCH	CT	
UNIT DUCT	UD	
SYSTEM	S	
INTERSECTION	IP	I
TELEPHONE CONNECTION	T	T
SERVICE INSTALLATION		

FOR INFORMATION ONLY

TS SHT NO. 163

MODEL: $MODELNAME$
FILE NAME: D162N39-sht-TS163-INTERCONNECT.dgn

AMES Engineering, Inc.
CONSULTING ENGINEERS
6330 Belmont Road, Suite 4B
Downers Grove, IL 60516

USER NAME = msomer	DESIGNED - MA, MA	REVISED -	
	DRAWN - MA, MA, MD, SR	REVISED -	
PLOT SCALE = $SCALE$	CHECKED - JMA, AS	REVISED -	
PLOT DATE = 03/19/2025	DATE - 11/08/2024	REVISED -	

STATE OF ILLINOIS
DEPARTMENT OF TRANSPORTATION

INTERCONNECT PLAN
CERMAK ROAD

SCALE: NTS | SHEET 1 OF 1 SHEETS | STA. | TO STA.

F.A. RTE.	SECTION	COUNTY	TOTAL SHEETS	SHEET NO.
771	2020-266-SUR, SW & TS	COOK, DUPAGE	492	312
		CONTRACT NO. 62N39		
		ILLINOIS	FED. AID PROJECT	

FAP RTE.	SECTION	COUNTY	TOTAL SHEETS	SHEET NO.
330	918-BR	COOK	70	38
STA.		TO STA.		
FED. ROAD DIST. NO.		ILLINOIS	FED. AID PROJECT	

D-91-261-96

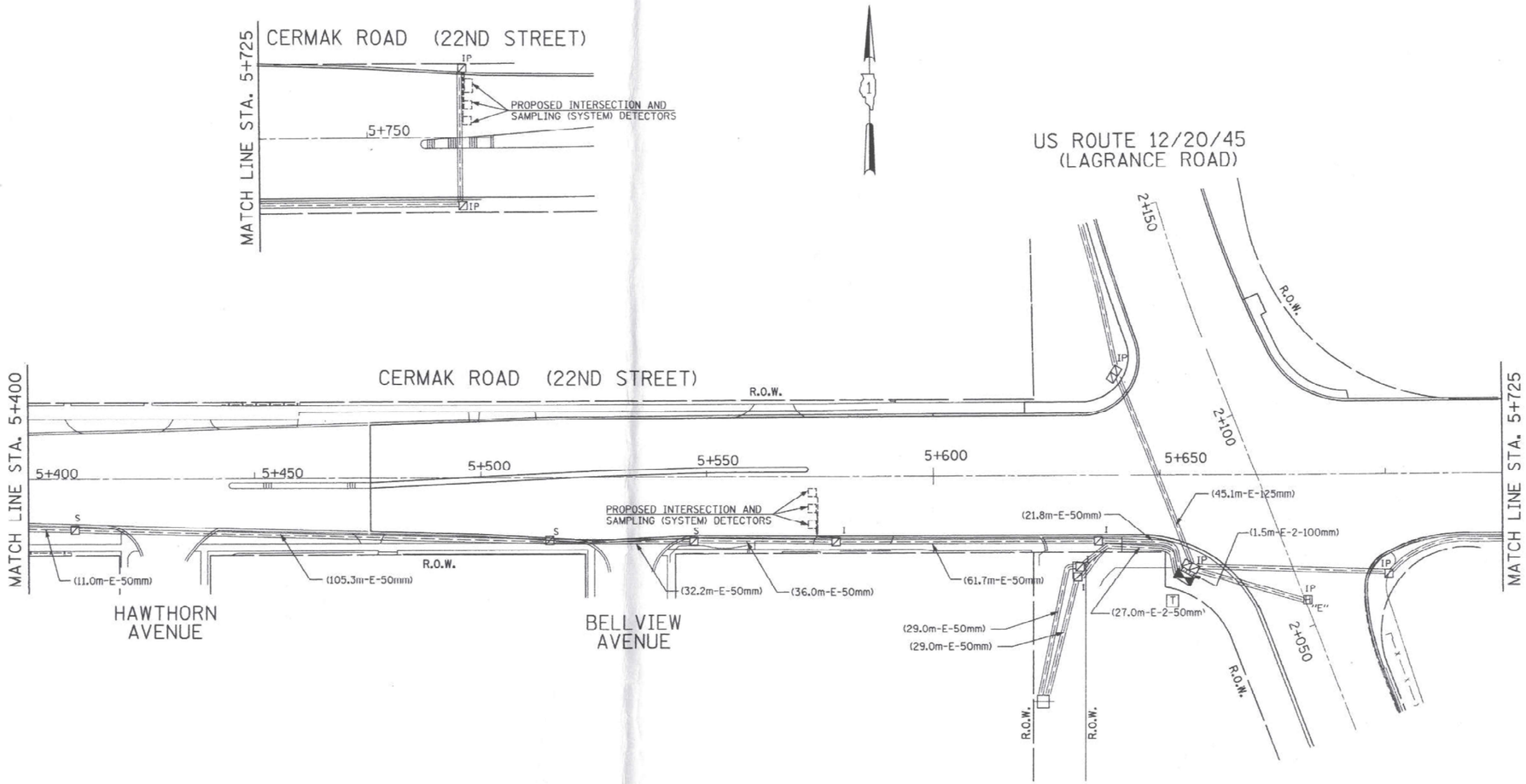

INTERCONNECT PLAN LEGEND

	PROPOSED	EXISTING
CONTROLLER		
HANDHOLE		
HEAVY DUTY HANDHOLE		"E"
DOUBLE HANDHOLE		
GALVANIZED STEEL CONDUIT IN TRENCH OR PUSHED		
DETECTOR LOOP		
COMMON TRENCH	CT	
UNIT DUCT	UD	
SYSTEM	S	
INTERSECTION	IP	I
TELEPHONE CONNECTION	T	T
SERVICE INSTALLATION		

FOR INFORMATION ONLY

TS SHT NO. 164

MODEL: $MODELNAME$
FILE NAME: D:\62N39-sht-TS164-INTERCONNECT.dgn

AMES Engineering, Inc.
CONSULTING ENGINEERS
6330 Belmont Road, Suite 4B
Downers Grove, IL 60516

USER NAME = msomer	DESIGNED - MG, MA	REVISED -	
	DRAWN - SG, MA, MD, SR	REVISED -	
PLOT SCALE = $SCALE$	CHECKED - JAA, AS	REVISED -	
PLOT DATE = 03/19/2025	DATE - 11/08/2024	REVISED -	

STATE OF ILLINOIS
DEPARTMENT OF TRANSPORTATION

INTERCONNECT PLAN
CERMAK ROAD

SCALE: NTS | SHEET 1 OF 1 SHEETS | STA. | TO STA.

F.A. RTE.	SECTION	COUNTY	TOTAL SHEETS	SHEET NO.
771	2020-266-SUR, SW & TS	COOK, DUPAGE	492	313
		CONTRACT NO. 62N39		
		ILLINOIS	FED. AID PROJECT	

FAU RTE.	SECTION	COUNTY	TOTAL SHEETS	SHEET NO.
1453	1995-118TS	COOK	47	43
STA 67+00/3H+00		TO STA 57+00		

C-91-168-95

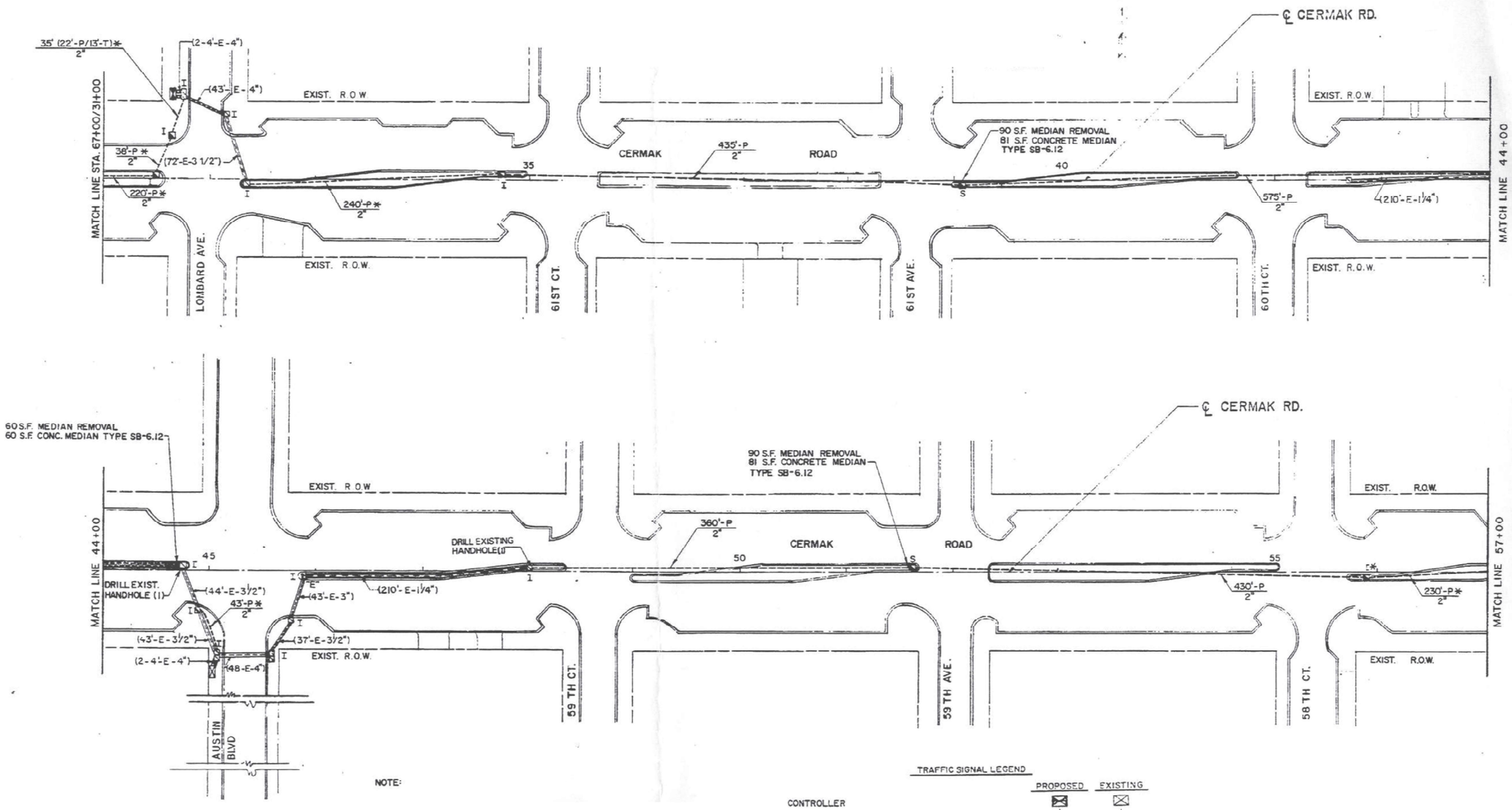

NOTE:

TRAFFIC SIGNAL LEGEND

	PROPOSED	EXISTING
CONTROLLER		
SERVICE INSTALLATION		
HANDHOLE		
HEAVY DUTY HANDHOLE	H	H "E"
DOUBLE HANDHOLE		
G.S. CONDUIT IN TRENCH OR PUSHED		
DETECTOR LOOP		
SYSTEM	S	S
INTERSECTION	I	I

FOR INFORMATION ONLY

TS SHT NO. 165

MODEL: $MODELNAME$
FILE NAME: D162N39-sht-TS165-INTERCONNECT.dgn

AMES Engineering, Inc.
CONSULTING ENGINEERS
6330 Belmont Road, Suite 4B
Downers Grove, IL 60516

USER NAME = msomer	DESIGNED - MG, MA	REVISED -	
	DRAWN - SG, MA, MD, SR	REVISED -	
PLOT SCALE = $SCALE$	CHECKED - JAM, AS	REVISED -	
PLOT DATE = 03/19/2025	DATE - 11/08/2024	REVISED -	

STATE OF ILLINOIS
DEPARTMENT OF TRANSPORTATION

INTERCONNECT PLAN
CERMAK ROAD

SCALE: NTS | SHEET 1 OF 1 SHEETS | STA. | TO STA.

F.A. RTE.	SECTION	COUNTY	TOTAL SHEETS	SHEET NO.
771	2020-266-SUR, SW & TS	COOK, DUPAGE	492	314

CONTRACT NO. 62N39

ILLINOIS | FED. AID PROJECT

F.A. RTE.	SECTION	COUNTY	TOTAL SHEETS	SHEET NO.
1450	1995-118TG	COOK	47	42
STA 39+00		TO STA 67+00/31+00		

C-91-168-95

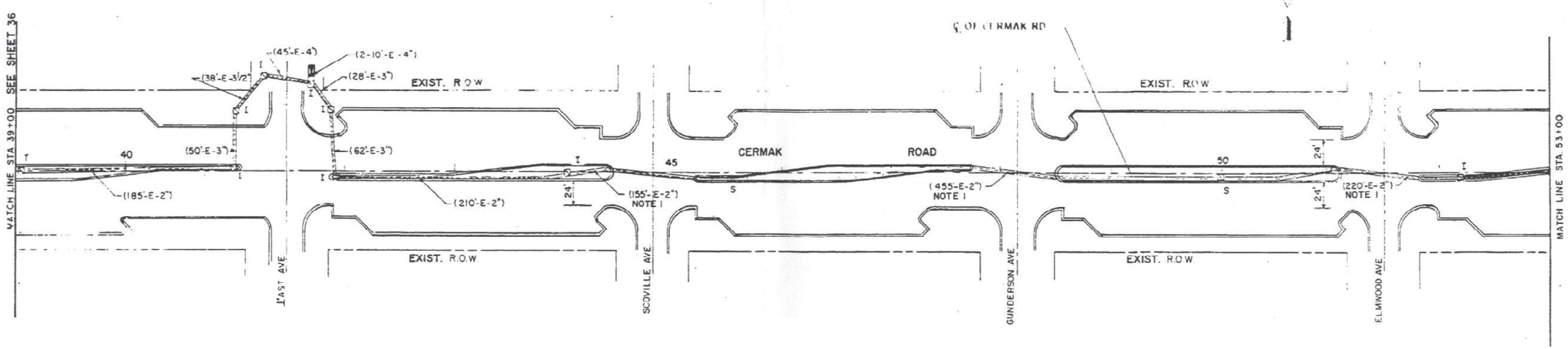

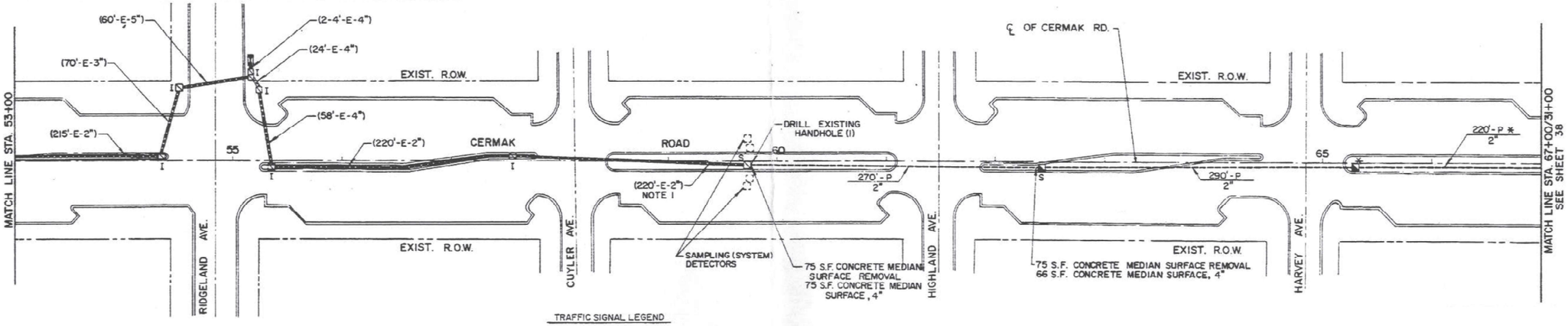

TRAFFIC SIGNAL LEGEND

	PROPOSED	EXISTING
CONTROLLER		
SERVICE INSTALLATION		
HANDHOLE		
HEAVY DUTY HANDHOLE	H	H "E"
DOUBLE HANDHOLE		
G.S. CONDUIT IN TRENCH OR PUSHED		
DETECTOR LOOP		
SYSTEM	S	S
INTERSECTION	I	I

FOR INFORMATION ONLY

TS SHT NO. 166

MODEL: $MODELNAME$
FILE NAME: D162N39-sh-TS166-INTERCONNECT.dgn

AMES Engineering, Inc.
CONSULTING ENGINEERS
6330 Belmont Road, Suite 4B
Downers Grove, Il. 60516

USER NAME = msomer	DESIGNED - MA, MA	REVISED -	
	DRAWN - SR, MA, MD, SR	REVISED -	
PLOT SCALE = $SCALE$	CHECKED - JRM, AS	REVISED -	
PLOT DATE = 03/19/2025	DATE - 11/08/2024	REVISED -	

STATE OF ILLINOIS
DEPARTMENT OF TRANSPORTATION

INTERCONNECT PLAN
CERMAK ROAD

SCALE: NTS | SHEET 1 OF 1 SHEETS | STA. | TO STA.

F.A. RTE.	SECTION	COUNTY	TOTAL SHEETS	SHEET NO.
771	2020-266-SUR, SW & TS	COOK, DUPAGE	42	315

CONTRACT NO. 62N39

ILLINOIS | FED. AID PROJECT

F.A. RTE.	SECTION	COUNTY	TOTAL SHEETS	SHEET NO.
1453	1995-118TS	COOK	47	41
STA. 0+00		TO STA. 39+00		
FED. ROAD DIST. NO. 7		ILLINOIS	FED. AID PROJECT	

C-91-168-95

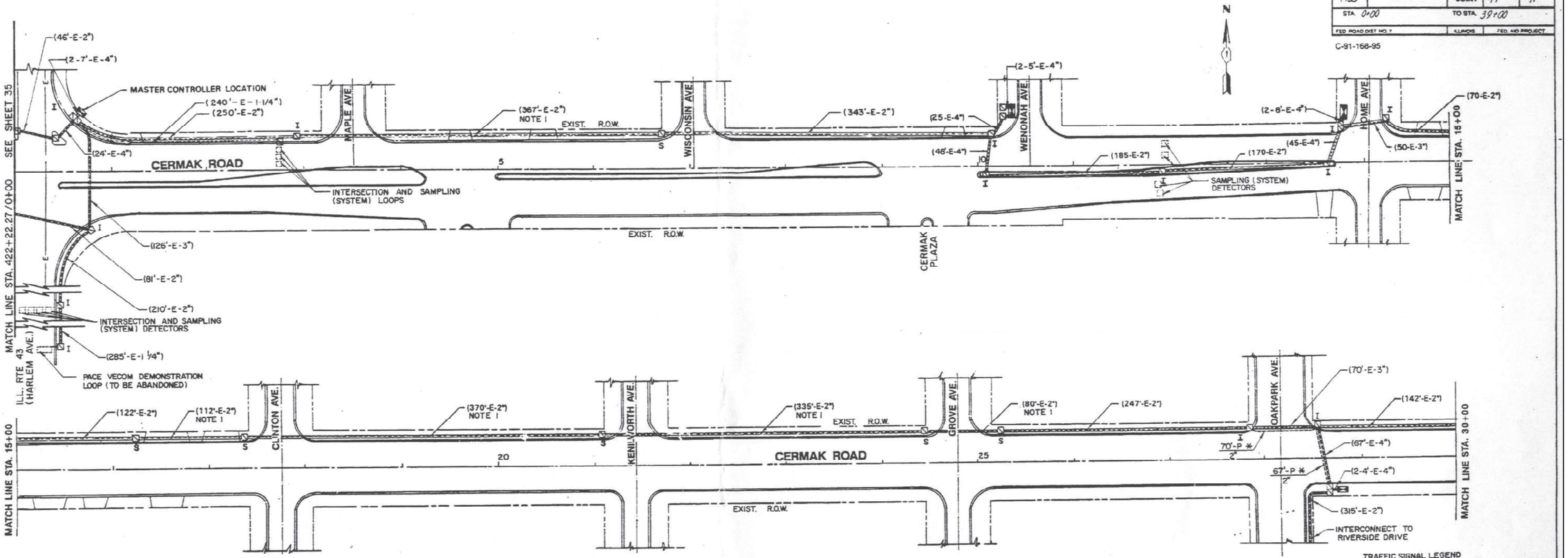

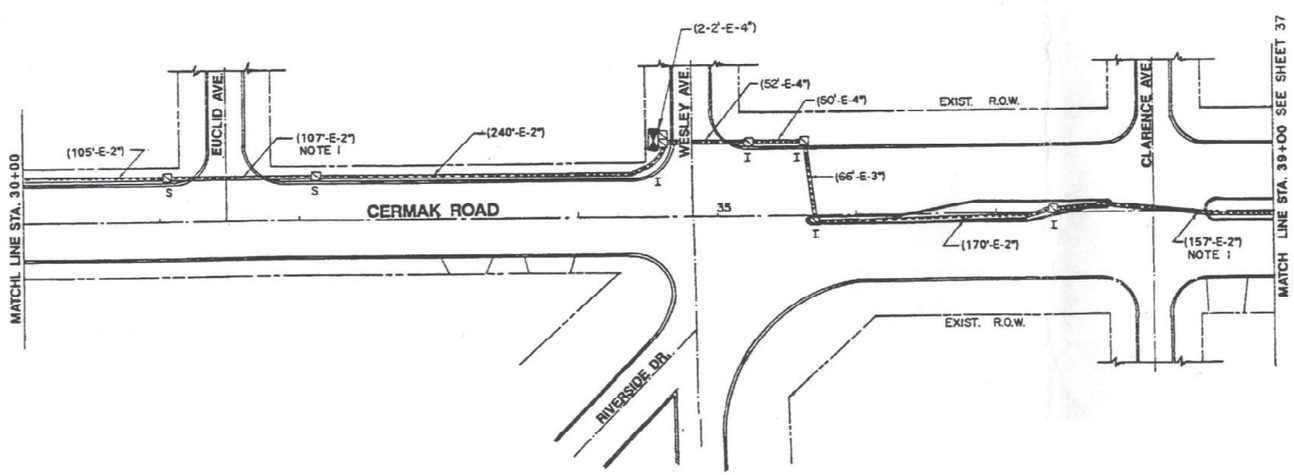

TRAFFIC SIGNAL LEGEND

	PROPOSED	EXISTING
CONTROLLER		
SERVICE INSTALLATION		
HANDHOLE		
HEAVY DUTY HANDHOLE	H	H "E"
DOUBLE HANDHOLE		
G.S. CONDUIT IN TRENCH OR PUSHED		
DETECTOR LOOP		
SYSTEM	S	
INTERSECTION		I
COMMON TRENCH	CT	
UNIT DUCT	UD	

FOR INFORMATION ONLY

TS SHT NO. 167

MODEL: $MODELNAME$
FILE NAME: D162N39-sht-TS167-INTERCONNECT.dgn

AMES Engineering, Inc.
CONSULTING ENGINEERS
6330 Belmont Road, Suite 4B
Downers Grove, Il. 60516

USER NAME = msomer	DESIGNED - MB, MA	REVISED -	
	DRAWN - SB, MA, MD, SR	REVISED -	
PLOT SCALE = $SCALE$	CHECKED - JRA, AS	REVISED -	
PLOT DATE = 03/19/2025	DATE - 11/08/2024	REVISED -	

STATE OF ILLINOIS
DEPARTMENT OF TRANSPORTATION

INTERCONNECT PLAN
CERMAK ROAD

SCALE: NTS | SHEET 1 OF 1 SHEETS | STA. | TO STA.

F.A. RTE.	SECTION	COUNTY	TOTAL SHEETS	SHEET NO.
771	2020-266-SUR, SW & TS	COOK, DUPAGE	492	316
		CONTRACT NO. 62N39		
		ILLINOIS	FED. AID PROJECT	

F.A.U. RTE.	SECTION	COUNTY	TOTAL SHEETS	SHEET NO.
1453	1995-118TS	COOK	47	40
STA. 419+50		TO STA. 442+22.27/0+00		
FED. ROAD DIST. NO. 7	ILLINOIS	FED. AID PROJECT-		

C-91-168-95

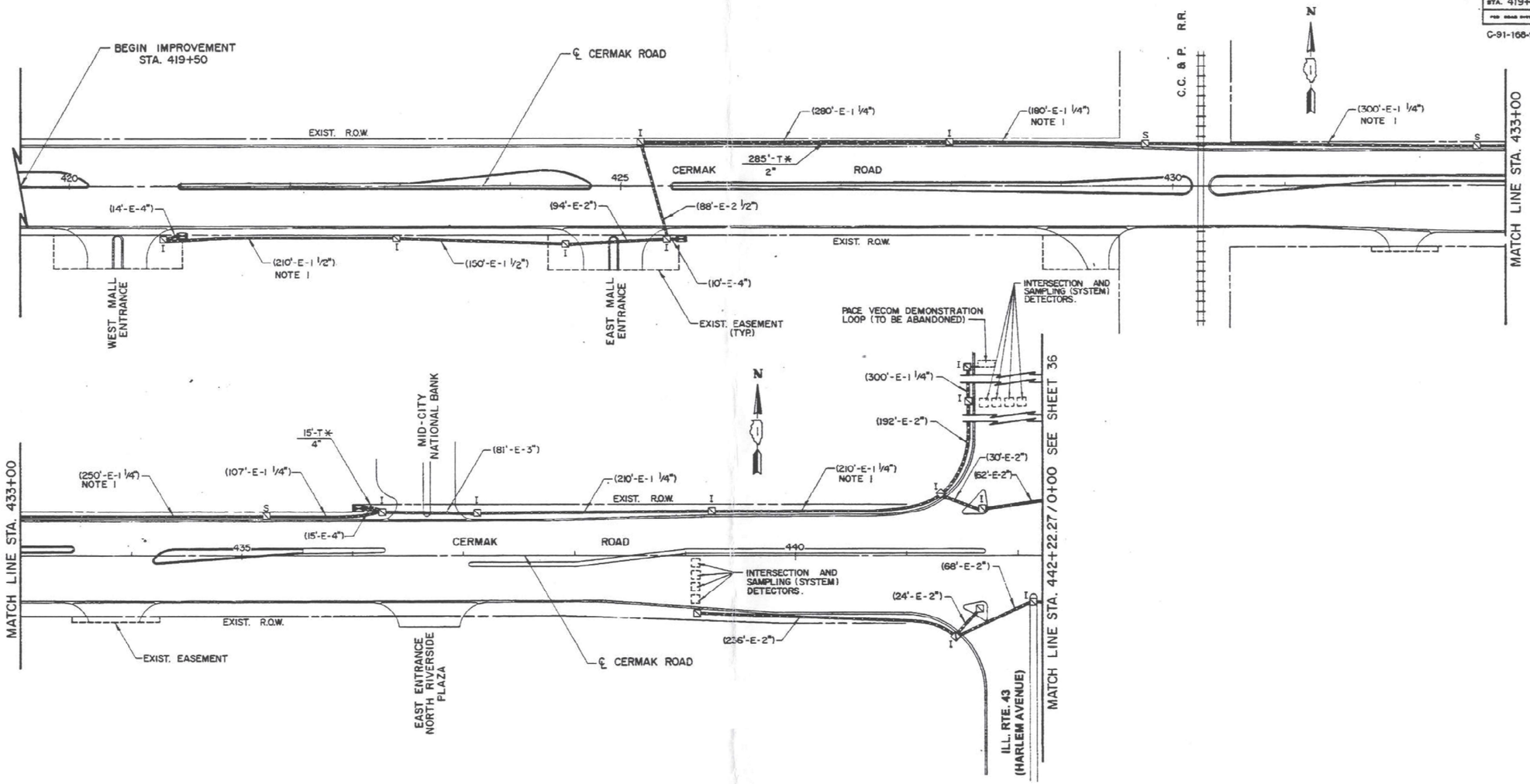

TRAFFIC SIGNAL LEGEND

	PROPOSED	EXISTING
CONTROLLER		
SERVICE INSTALLATION		
HANDHOLE		
HEAVY DUTY HANDHOLE	H	H "E"
DOUBLE HANDHOLE		
G.S. CONDUIT IN TRENCH OR PUSHED	----	----
DETECTOR LOOP		
SYSTEM	S	S
INTERSECTION	I	I

FOR INFORMATION ONLY

TS SHT NO. 168

MODEL: $MODELNAME$
FILE NAME: D162N39-sht-TS168-INTERCONNECT.dgn

AMES Engineering, Inc.
CONSULTING ENGINEERS
6330 Belmont Road, Suite 4B
Downers Grove, Il. 60516

USER NAME = msomer	DESIGNED - MS, MA	REVISED -	
	DRAWN - MS, MA, MD, SR	REVISED -	
PLOT SCALE = $SCALE$	CHECKED - JM, AS	REVISED -	
PLOT DATE = 03/19/2025	DATE - 11/08/2024	REVISED -	

STATE OF ILLINOIS
DEPARTMENT OF TRANSPORTATION

INTERCONNECT PLAN
CERMAK ROAD

SCALE: NTS | SHEET 1 OF 1 SHEETS | STA. | TO STA.

F.A. RTE.	SECTION	COUNTY	TOTAL SHEETS	SHEET NO.
771	2020-266-SUR, SW & TS	COOK, DUPAGE	492	317
		CONTRACT NO. 62N39		
		ILLINOIS	FED. AID PROJECT	

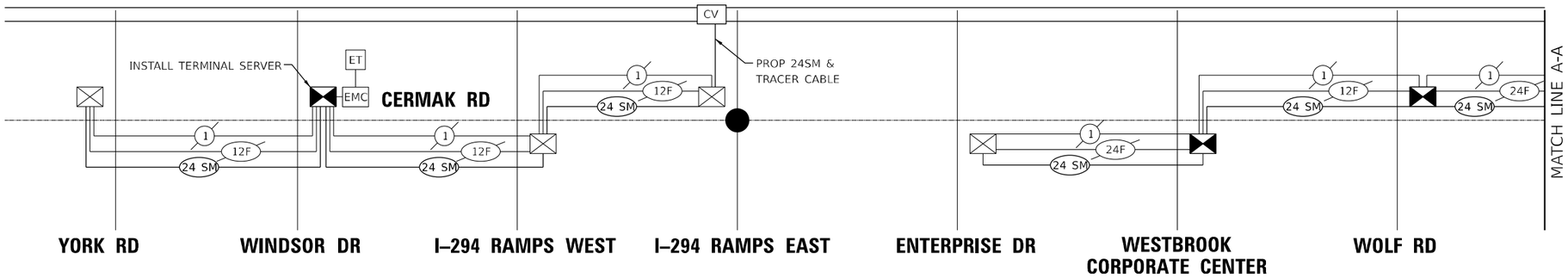

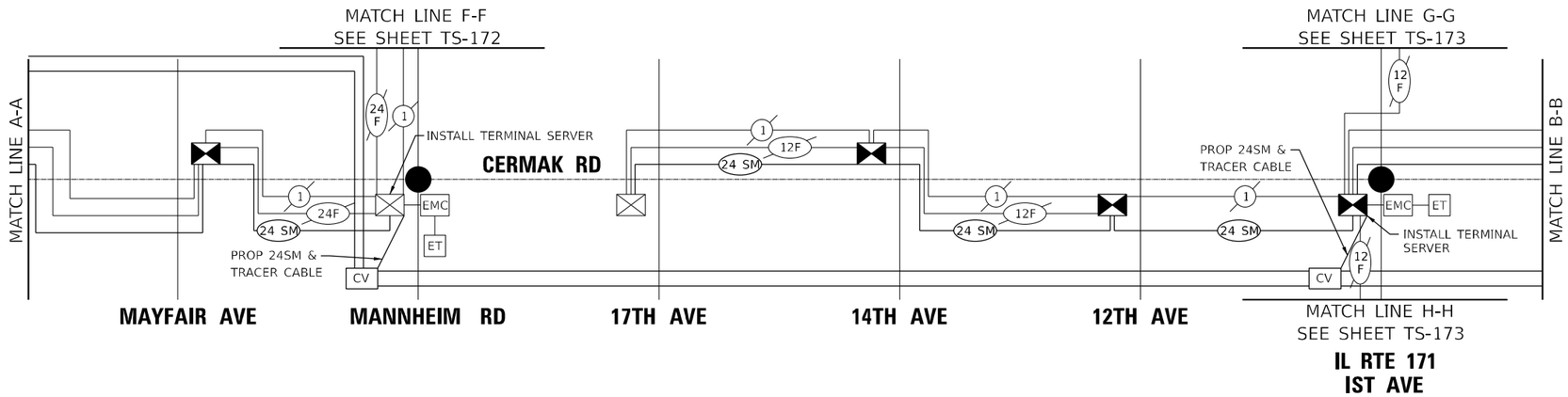

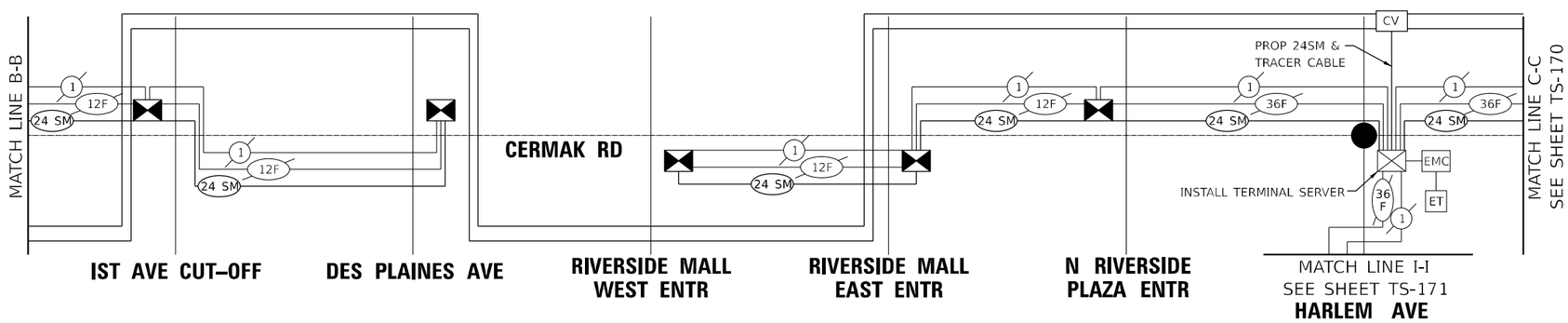

N

PROPOSED LAYER III NETWORK SWITCH

NOTES:

1. COORDINATE IMPROVEMENTS WITH CONTRACT 62N32.

2. THE INTERSECTION OF CERMAK ROAD AND MANNHEIM ROAD SHALL REMAIN ON THE IDOT CLOSED SYSTEM ECON 103.

3. COORDINATE IMPROVEMENTS WITH CONTRACT 62J47 FOR IMPROVEMENTS FROM N RIVERSIDE PLAZA ENTR TO WENONAH AVE.

4. THE INTERSECTION OF CERMAK ROAD AND IL 50 (CICERO AVE) SHALL REMAIN ON THE IDOT CLOSED LOOP SYSTEM ECON 108.

TS SHT NO. 169

MODEL: $MODEL$NAME
FILE NAME: D:\62N39-cht-TS169-INTERCONNECT.dgn

AMES Engineering, Inc.
CONSULTING ENGINEERS
6330 Belmont Road, Suite 4B
Downers Grove, IL 60516

USER NAME = msomer	DESIGNED - MS, MA	REVISED -	
	DRAWN - MS, MA, MD, SR	REVISED -	
PLOT SCALE = $SCALE$	CHECKED - JM, AS	REVISED -	
PLOT DATE = 03/19/2025	DATE - 11/08/2024	REVISED -	

STATE OF ILLINOIS
DEPARTMENT OF TRANSPORTATION

INTERCONNECT SCHEMATIC (SHEET 1 OF 2)
CERMAK RD FROM WINDSOR DR TO CICERO AVE

SCALE: NTS | SHEET 1 OF 1 SHEETS | STA. | TO STA.

IDOT CENTRACS

F.A. RTE.	SECTION	COUNTY	TOTAL SHEETS	SHEET NO.
771	2020-266-SUR, SW & TS	COOK, DUPAGE	492	318
		CONTRACT NO. 62N39		
		ILLINOIS	FED. AID PROJECT	

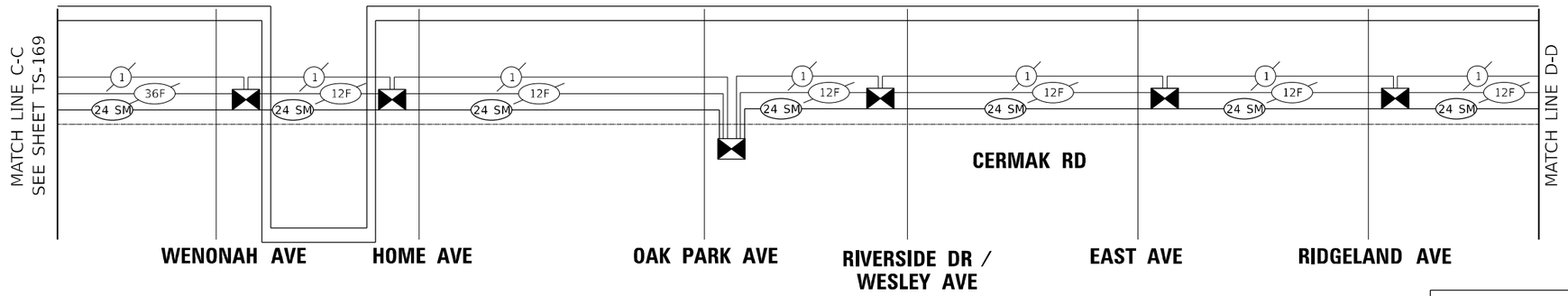

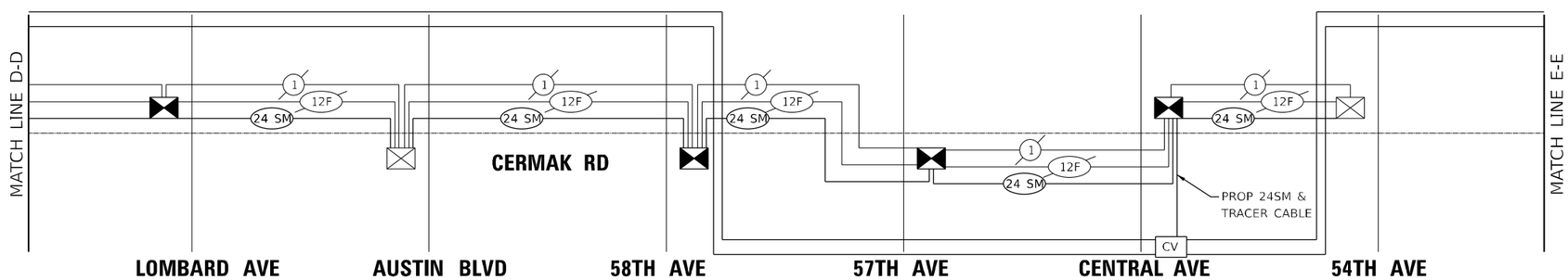

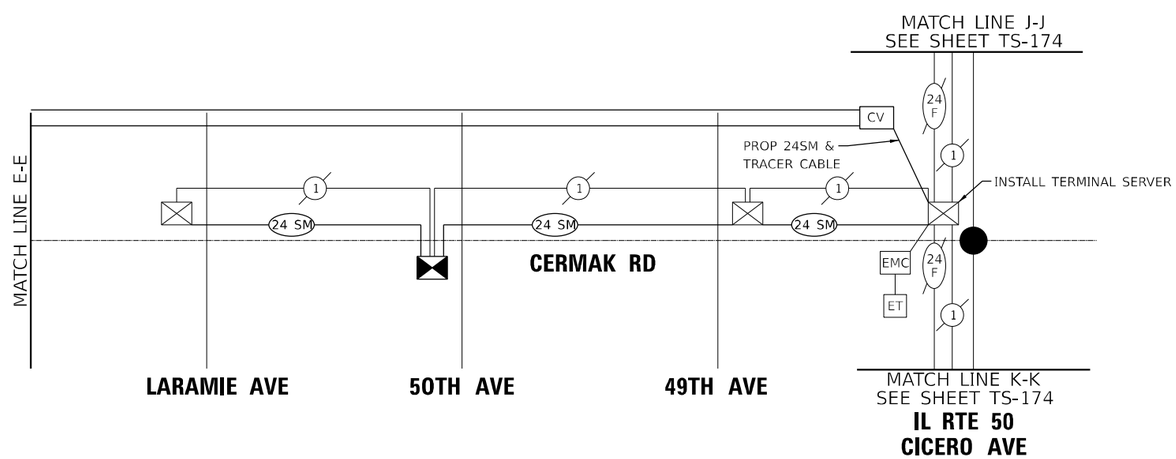

N

PROPOSED LAYER III NETWORK SWITCH

SCHEDULE OF QUANTITIES

ITEM DESCRIPTION	UNITS	TOTAL QTY
REMOVE ELECTRIC CABLE FROM CONDUIT	FOOT	88588
TERMINAL SERVER	EACH	4
FIBER OPTIC CABLE IN CONDUIT, NO. 62.5/125, 12F	FOOT	1121
FIBER OPTIC CABLE IN CONDUIT, NO. 62.5/125, SM24F	FOOT	44294
TERMINATE FIBER IN CABINET	EACH	444
SPLICE FIBER IN CABINET	EACH	198

NOTES:

1. COORDINATE IMPROVEMENTS WITH CONTRACT 62N32.

2. THE INTERSECTION OF CERMAK ROAD AND MANNHEIM ROAD SHALL REMAIN ON THE IDOT CLOSED SYSTEM ECON 103.

3. COORDINATE IMPROVEMENTS WITH CONTRACT 62J47 FOR IMPROVEMENTS FROM N RIVERSIDE PLAZA ENTR TO WENONAH AVE.

4. THE INTERSECTION OF CERMAK ROAD AND IL 50 (CICERO AVE) SHALL REMAIN ON THE IDOT CLOSED LOOP SYSTEM ECON 108.

TS SHT NO. 170

MODEL: SMODELNAMES
FILE NAME: D:\62N39-sht-TS170-INTERCONNECT.dgn

AMES Engineering, Inc.
CONSULTING ENGINEERS
6330 Belmont Road, Suite 4B
Downers Grove, IL 60516

USER NAME = msomer	DESIGNED - MS, MA	REVISED -	
	DRAWN - SS, MA, MD, SR	REVISED -	
PLOT SCALE = $SCALE$	CHECKED - JAR, AS	REVISED -	
PLOT DATE = 03/19/2025	DATE - 11/08/2024	REVISED -	

STATE OF ILLINOIS
DEPARTMENT OF TRANSPORTATION

INTERCONNECT SCHEMATIC (SHEET 2 OF 2)
CERMAK RD FROM WINDSOR DR TO CICERO AVE

SCALE: NTS | SHEET 1 OF 1 SHEETS | STA. | TO STA.

IDOT CENTRACS

F.A. RTE.	SECTION	COUNTY	TOTAL SHEETS	SHEET NO.
771	2020-266-SUR, SW & TS	COOK, DUPAGE	492	319

CONTRACT NO. 62N39

ILLINOIS | FED. AID PROJECT

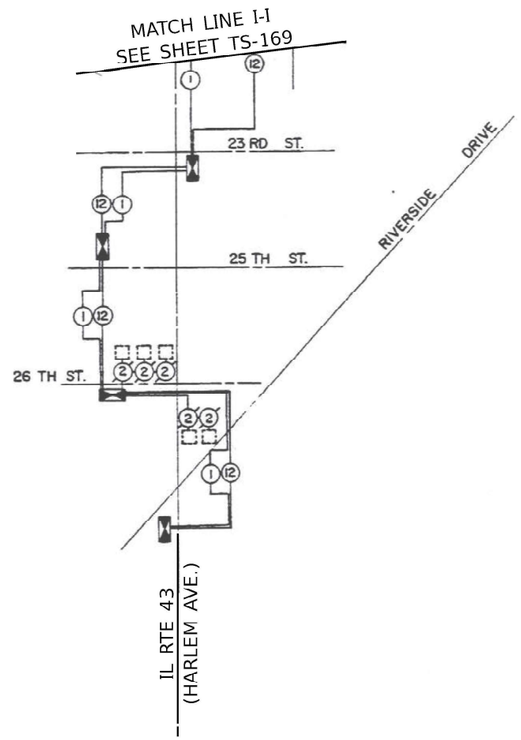

FOR INFORMATION ONLY

TS SHT NO. 171

MODEL: $MODELNAME$
FILE NAME: D162N39-sht-TS171-INTERCONNECT.dgn

AMES Engineering, Inc.
CONSULTING ENGINEERS
6330 Belmont Road, Suite 4B
Downers Grove, IL 60516

USER NAME = msomer	DESIGNED - MA, MA	REVISED -	
	DRAWN - SR, MA, MD, SR	REVISED -	
PLOT SCALE = $SCALE$	CHECKED - JAA, AS	REVISED -	
PLOT DATE = 03/19/2025	DATE - 11/08/2024	REVISED -	

STATE OF ILLINOIS
DEPARTMENT OF TRANSPORTATION

INTERCONNECT SCHEMATIC
CERMAK ROAD

SCALE: NTS | SHEET 1 OF 1 SHEETS | STA. | TO STA.

F.A. RTE.	SECTION	COUNTY	TOTAL SHEETS	SHEET NO.
771	2020-266-SUR, SW & TS	COOK, DUPAGE	492	320

CONTRACT NO. 62N39

ILLINOIS | FED. AID PROJECT

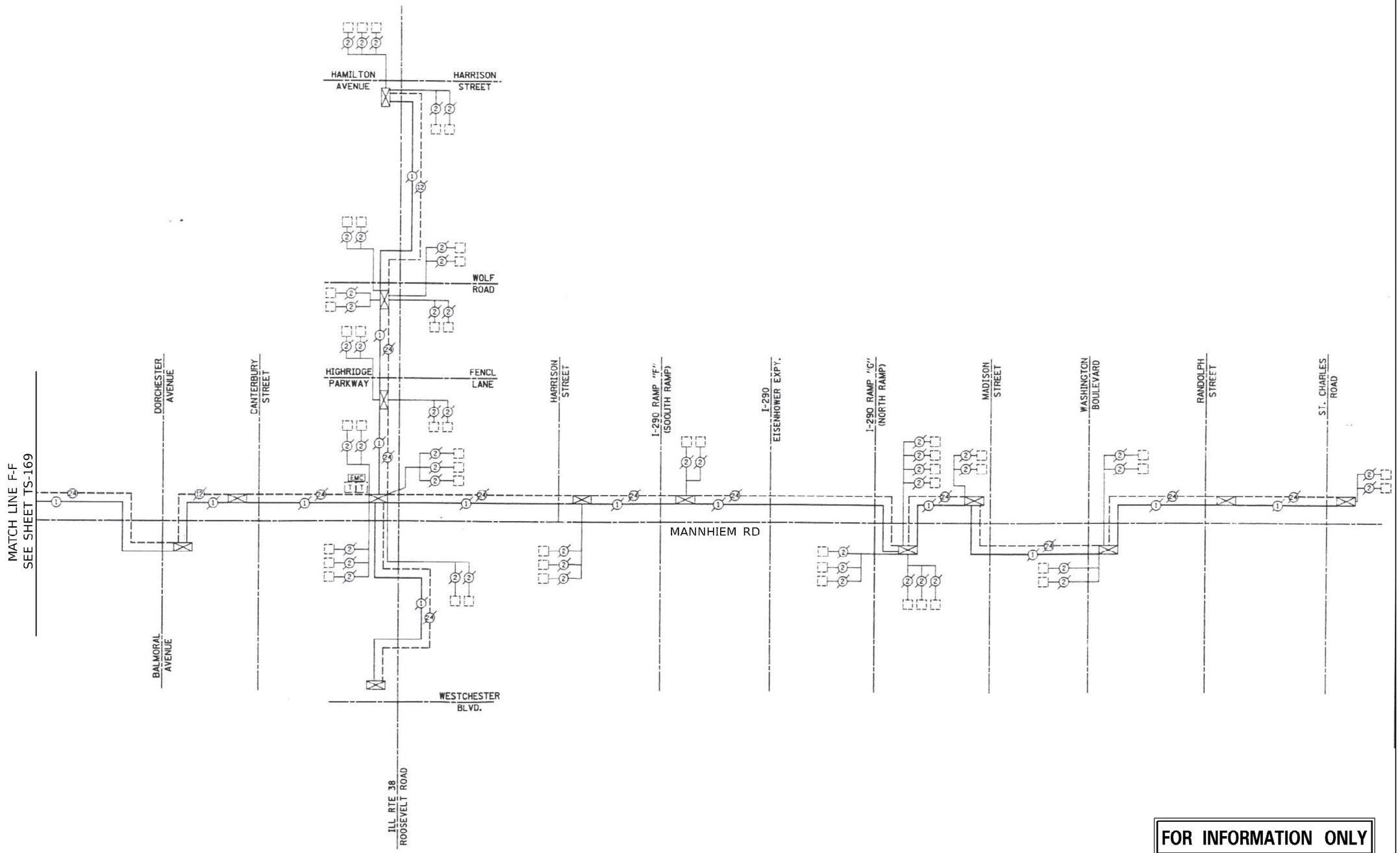

FOR INFORMATION ONLY

TS SHT NO. 172

MODEL: $MODELNAME$
FILE NAME: D162N39-sh-TS172-INTERCONNECT.dgn

AMES Engineering, Inc.
CONSULTING ENGINEERS
6330 Belmont Road, Suite 4B
Downers Grove, Il. 60516

USER NAME = msomer	DESIGNED - [illegible], MA	REVISED -	
	DRAWN - [illegible], MA, MD, SR	REVISED -	
PLOT SCALE = $SCALE$	CHECKED - [illegible], AS	REVISED -	
PLOT DATE = 03/19/2025	DATE - 11/08/2024	REVISED -	

STATE OF ILLINOIS
DEPARTMENT OF TRANSPORTATION

INTERCONNECT SCHEMATIC
CERMAK ROAD

SCALE: NTS | SHEET 1 OF 1 SHEETS | STA. | TO STA.

F.A. RTE.	SECTION	COUNTY	TOTAL SHEETS	SHEET NO.
771	2020-266-SUR, SW & TS	COOK, DUPAGE	482	321

CONTRACT NO. 62N39

ILLINOIS | FED. AID PROJECT

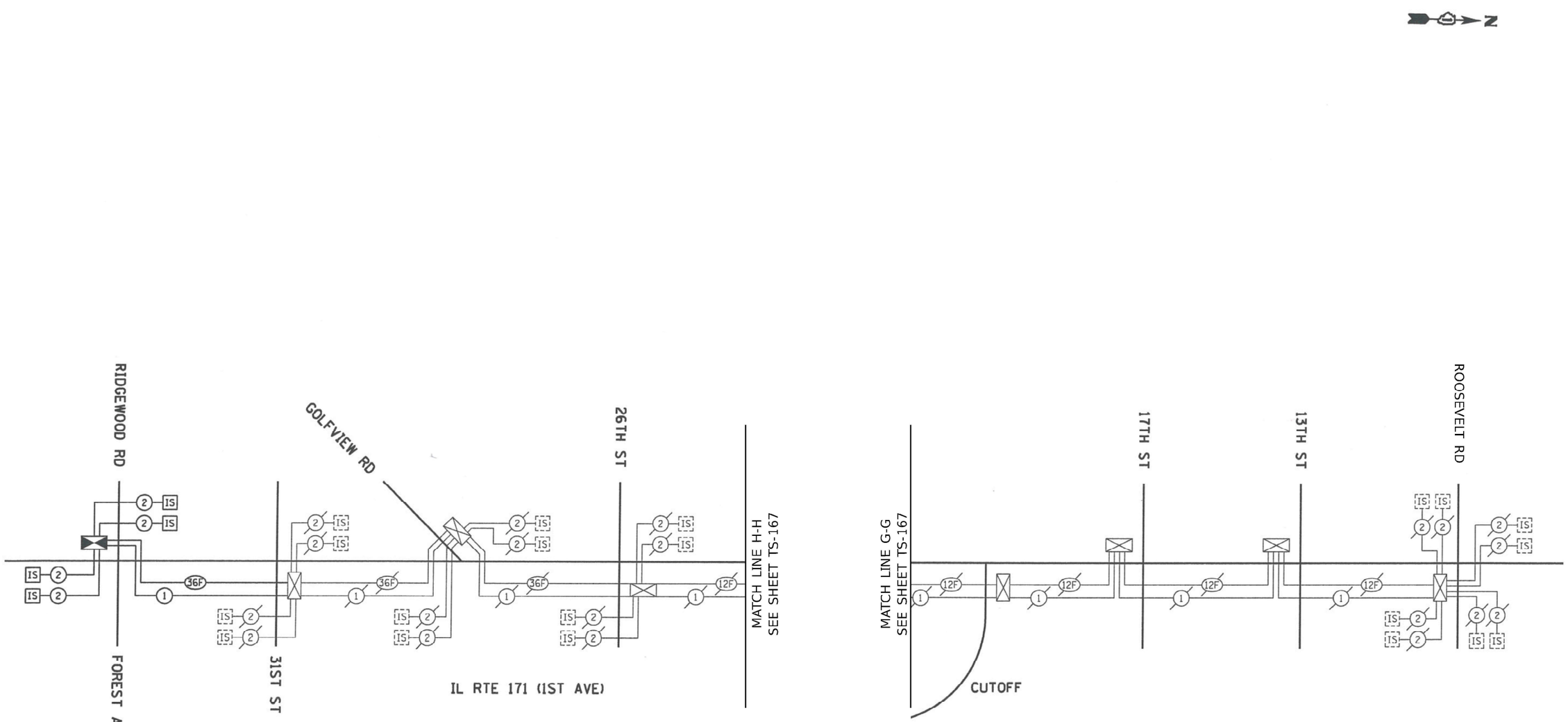

FOR INFORMATION ONLY

TS SHT NO. 173

MODEL: $MODEL$NAME$
FILE NAME: D162N39-sht-TS173-INTERCONNECT.dgn

AMES Engineering, Inc.
CONSULTING ENGINEERS
6330 Belmont Road, Suite 4B
Downers Grove, IL 60516

USER NAME = msomer	DESIGNED - MS, MA	REVISED -	
	DRAWN - MS, MA, MD, SR	REVISED -	
PLOT SCALE = $SCALE$	CHECKED - JM, AS	REVISED -	
PLOT DATE = 03/19/2025	DATE - 11/08/2024	REVISED -	

STATE OF ILLINOIS
DEPARTMENT OF TRANSPORTATION

INTERCONNECT SCHEMATIC
CERMAK ROAD

SCALE: NTS | SHEET 1 OF 1 SHEETS | STA. | TO STA.

F.A. RTE.	SECTION	COUNTY	TOTAL SHEETS	SHEET NO.
771	2020-266-SUR, SW & TS	COOK, DUPAGE	492	322
		CONTRACT NO. 62N39		
		ILLINOIS	FED. AID PROJECT	

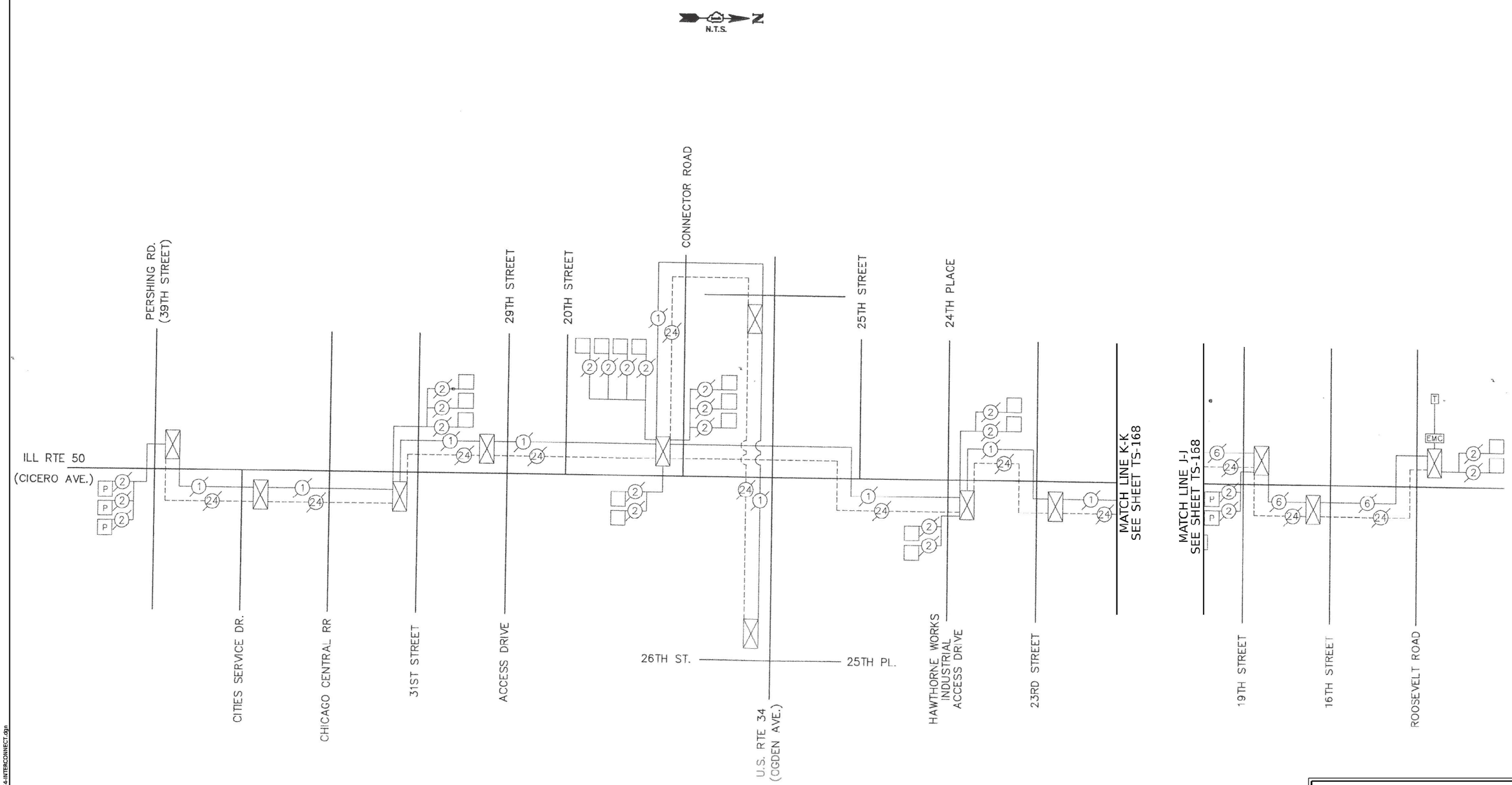

FOR INFORMATION ONLY

TS SHT NO. 174

MODEL: $MODELNAME$
FILE NAME: D162N39-sht-TS174-INTERCONNECT.dgn

AMES Engineering, Inc.
CONSULTING ENGINEERS
6330 Belmont Road, Suite 4B
Downers Grove, Il. 60516

USER NAME = msomer	DESIGNED - TMS, MA	REVISED -	
	DRAWN - SPS, MA, MD, SR	REVISED -	
PLOT SCALE = $SCALE$	CHECKED - TMT, AS	REVISED -	
PLOT DATE = 03/19/2025	DATE - 11/08/2024	REVISED -	

STATE OF ILLINOIS
DEPARTMENT OF TRANSPORTATION

INTERCONNECT SCHEMATIC
CERMAK ROAD

SCALE: NTS | SHEET 1 OF 1 SHEETS | STA. | TO STA.

F.A. RTE.	SECTION	COUNTY	TOTAL SHEETS	SHEET NO.
771	2020-266-SUR, SW & TS	COOK, DUPAGE	432	323

CONTRACT NO. 62N39

ILLINOIS | FED. AID PROJECT

SCHEDULE OF QUANTITIES

ITEM DESCRIPTION	UNITS	TOTAL QTY.
TRAFFIC SIGNAL POST, GALVANIZED STEEL, 16 FT.	EACH	1
CONCRETE FOUNDATION, TYPE A	FOOT	4
BLUETOOTH DETECTOR	EACH	1

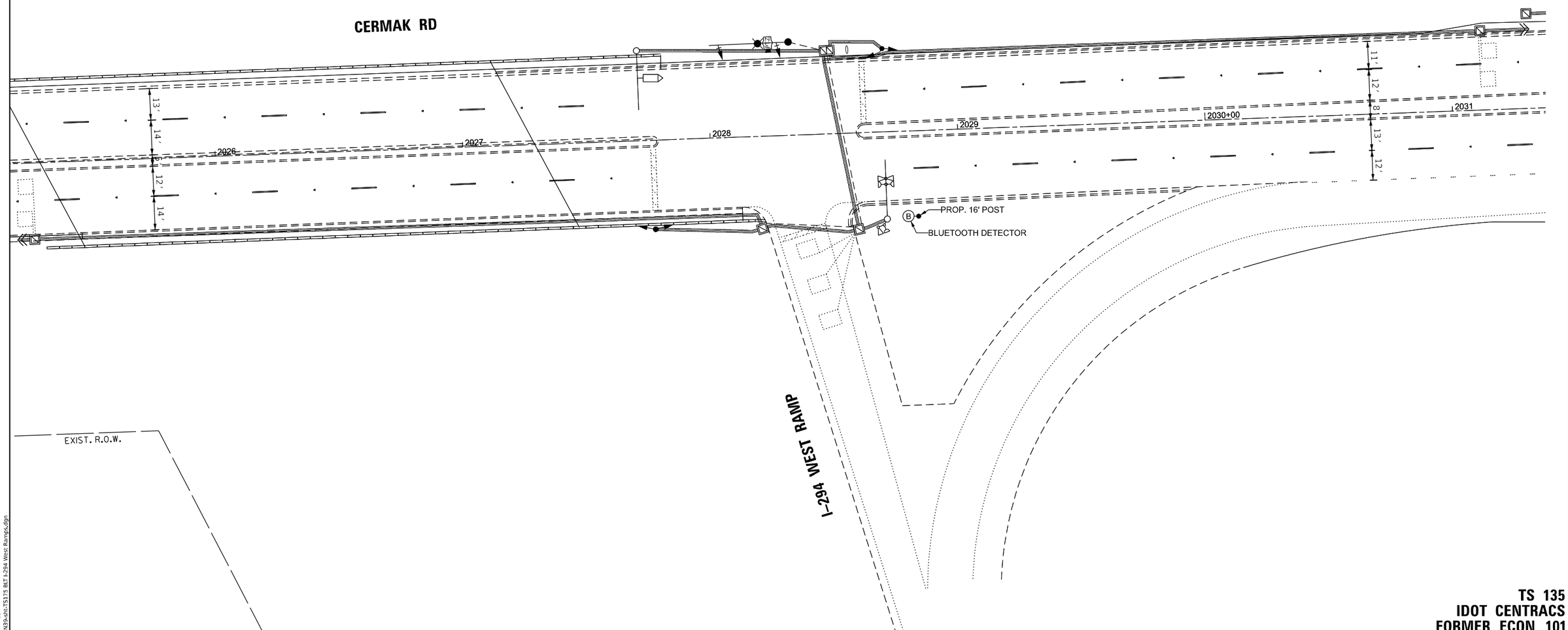

TS 135
IDOT CENTRACS
FORMER ECON 101

TS SHT NO. 175

MODEL: $MODELNAMES
FILE NAME: D162N39-sht-TS175 BLT I-294 West Ramps.dgn

AMES Engineering, Inc.
CONSULTING ENGINEERS
6330 Belmont Road, Suite 4B
Downers Grove, IL 60516

USER NAME = msomer	DESIGNED - TM	REVISED -	
	DRAWN - TM, SR	REVISED -	
PLOT SCALE = $SCALE$	CHECKED - JAR	REVISED -	
PLOT DATE = 03/19/2025	DATE - 05/23/2024	REVISED -	

STATE OF ILLINOIS
DEPARTMENT OF TRANSPORTATION

BLUETOOTH INSTALLATION PLAN
CERMAK RD AND I-294 WEST RAMP

SCALE: 1" = 20' | SHEET OF SHEETS | STA. TO STA.

F.A.U RTE.	SECTION	COUNTY	TOTAL SHEETS	SHEET NO.
1453	2020-266-SUR, SW & TS	COOK/DUPAGE	492	324
		CONTRACT NO. 62N39		
		ILLINOIS	FED. AID PROJECT	

SCHEDULE OF QUANTITIES

ITEM DESCRIPTION	UNITS	TOTAL QTY.
TRAFFIC SIGNAL POST, GALVANIZED STEEL, 16 FT.	EACH	1
CONCRETE FOUNDATION, TYPE A	FOOT	4
BLUETOOTH DETECTOR	EACH	1

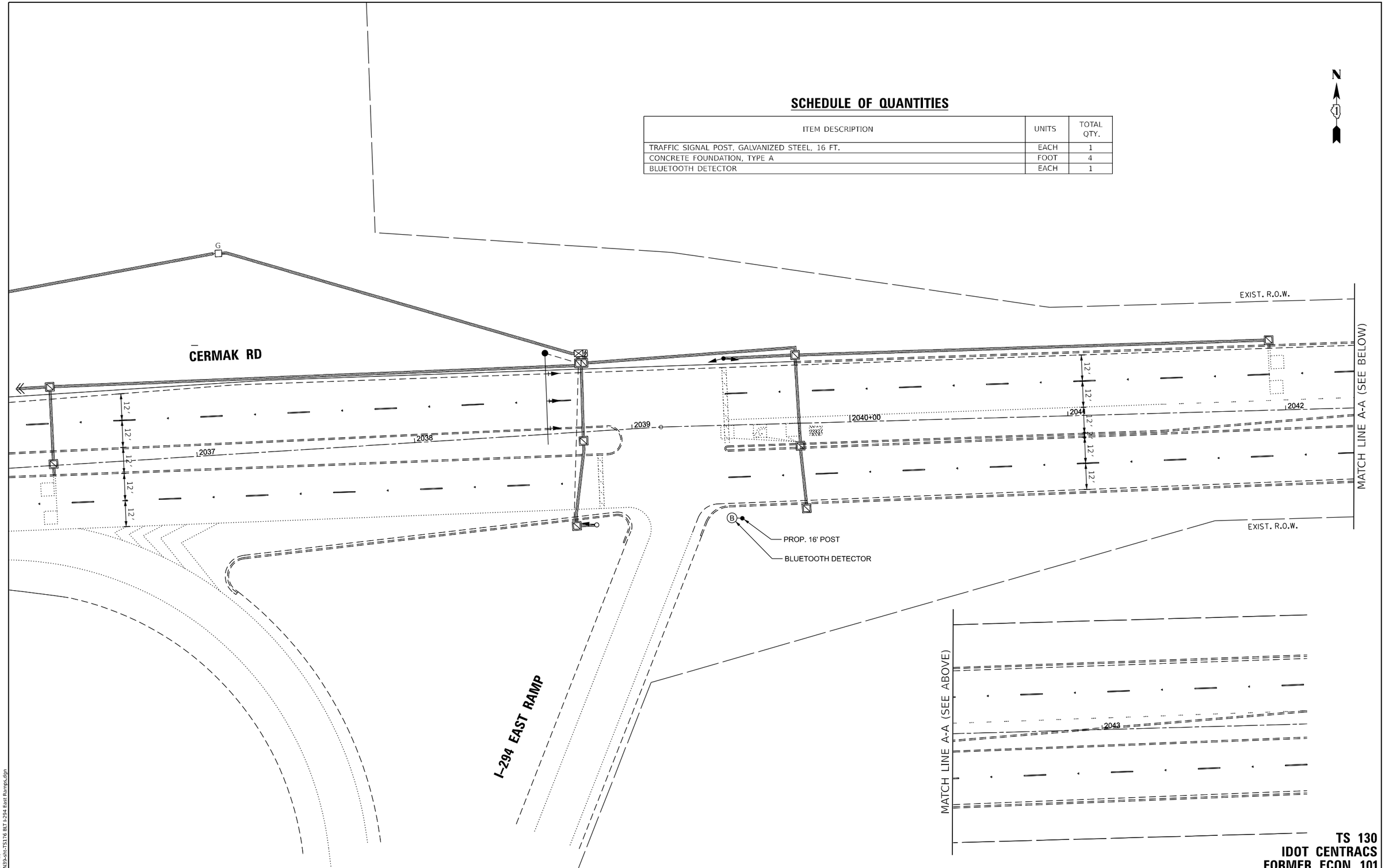

TS 130
IDOT CENTRACS
FORMER ECON 101

TS SHT NO. 176

MODEL: $MODELNAME$
FILE NAME: D162N39-sh-TS176 BLT I-294 East Ramps.dgn

AMES Engineering, Inc.
CONSULTING ENGINEERS
6330 Belmont Road, Suite 4B
Downers Grove, IL 60516

USER NAME = msomer	DESIGNED - TM	REVISED -	
	DRAWN - TM, SR	REVISED -	
PLOT SCALE = $SCALE$	CHECKED - JAR	REVISED -	
PLOT DATE = 03/19/2025	DATE - 05/23/2024	REVISED -	

STATE OF ILLINOIS
DEPARTMENT OF TRANSPORTATION

BLUETOOTH INSTALLATION PLAN
CERMAK RD AND I-294 EAST RAMP

SCALE: 1" = 20' | SHEET OF SHEETS | STA. TO STA.

F.A.U RTE.	SECTION	COUNTY	TOTAL SHEETS	SHEET NO.
1453	2020-266-SUR, SW & TS	COOK/DUPAGE	492	325
		CONTRACT NO. 62N39		
		ILLINOIS	FED. AID PROJECT	

SCHEDULE OF QUANTITIES

ITEM DESCRIPTION	UNITS	TOTAL QTY.
TRAFFIC SIGNAL POST, GALVANIZED STEEL, 16 FT.	EACH	1
CONCRETE FOUNDATION, TYPE A	FOOT	4
BLUETOOTH DETECTOR	EACH	1

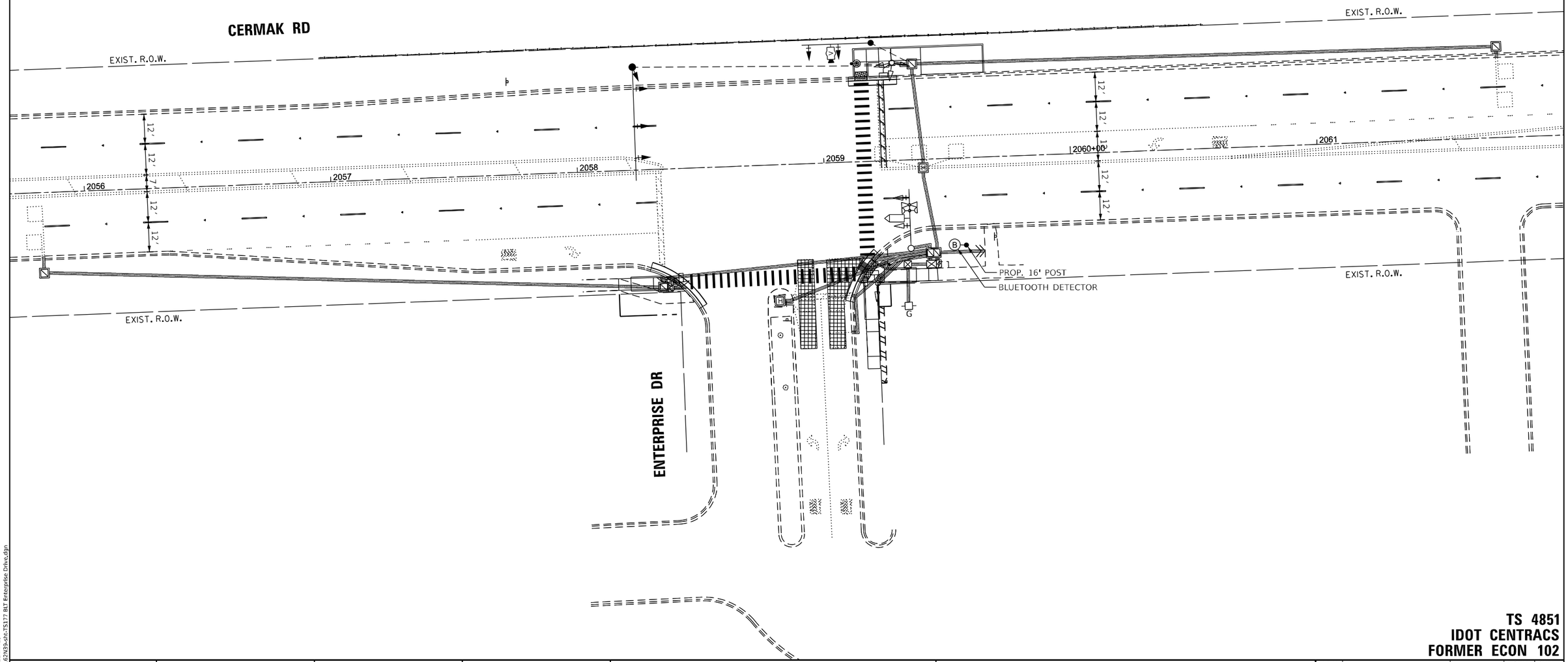

TS 4851
IDOT CENTRACS
FORMER ECON 102

TS SHT NO. 177

MODEL: $MODELNAME$
FILE NAME: D162N39-sht-TS177 BLT Enterprise Drive.dgn

AMES Engineering, Inc.
CONSULTING ENGINEERS
6330 Belmont Road, Suite 4B
Downers Grove, IL 60516

USER NAME = msomer	DESIGNED - TM	REVISED -	
	DRAWN - TM, SR	REVISED -	
PLOT SCALE = $SCALE$	CHECKED - JAR	REVISED -	
PLOT DATE = 03/19/2025	DATE - 05/23/2024	REVISED -	

STATE OF ILLINOIS
DEPARTMENT OF TRANSPORTATION

BLUETOOTH INSTALLATION PLAN
CERMAK RD AND ENTERPRISE DR

SCALE: 1" = 20' | SHEET OF SHEETS | STA. TO STA.

F.A.U RTE.	SECTION	COUNTY	TOTAL SHEETS	SHEET NO.
1453	2020-266-SUR, SW & TS	COOK/DUPAGE	492	326
		CONTRACT NO. 62N39		
	ILLINOIS	FED. AID PROJECT		

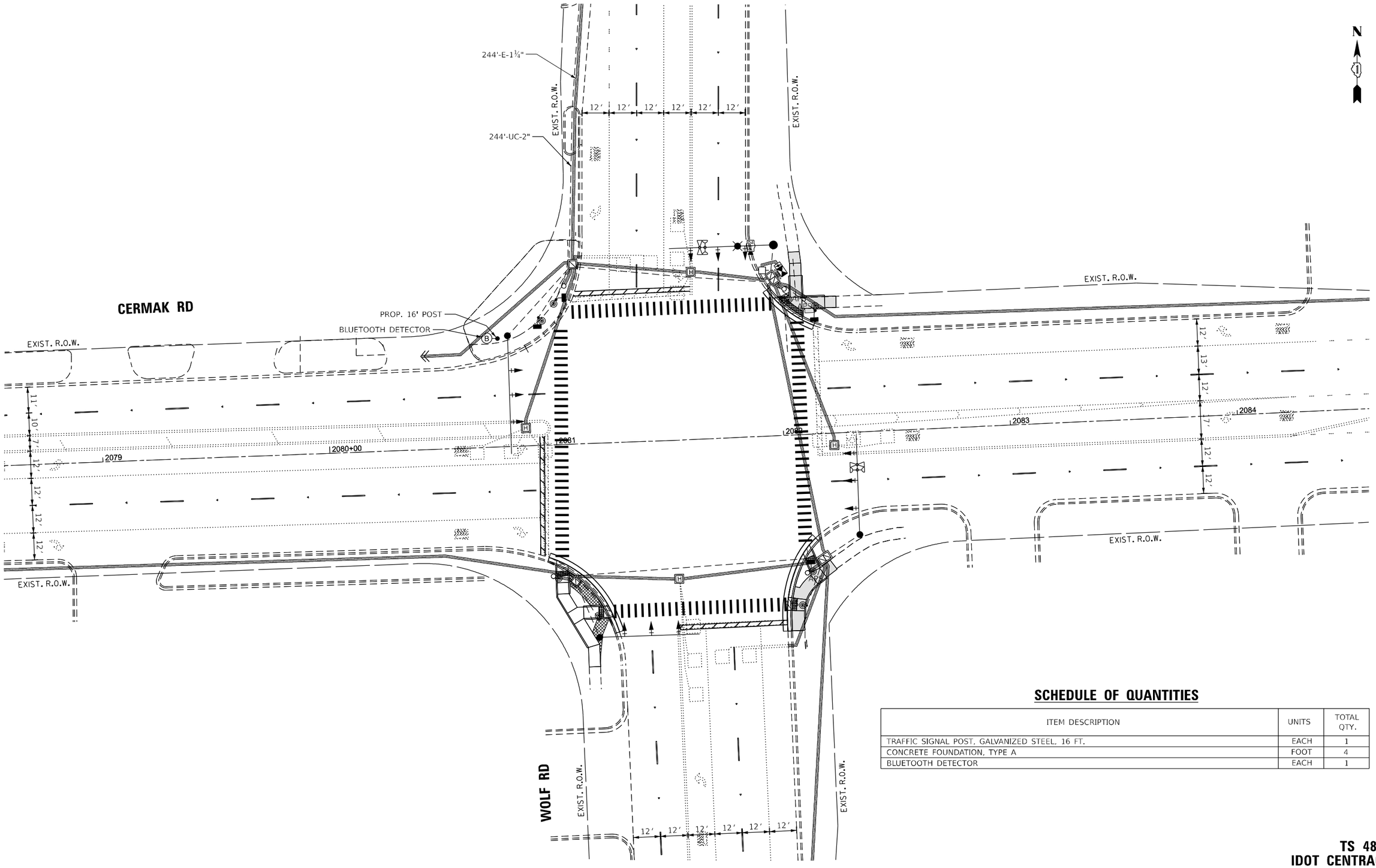

SCHEDULE OF QUANTITIES

ITEM DESCRIPTION	UNITS	TOTAL QTY.
TRAFFIC SIGNAL POST, GALVANIZED STEEL, 16 FT.	EACH	1
CONCRETE FOUNDATION, TYPE A	FOOT	4
BLUETOOTH DETECTOR	EACH	1

TS 4845
IDOT CENTRACS
FORMER ECON 102

TS SHT NO. 178

MODEL: $MODELNAMES
FILE NAME: D162N39-sht-TS178 BLT Wolf Road.dgn

AMES Engineering, Inc.
CONSULTING ENGINEERS
6330 Belmont Road, Suite 4B
Downers Grove, IL 60516

USER NAME = msomer	DESIGNED - TM	REVISED -	
	DRAWN - TM, SR	REVISED -	
PLOT SCALE = $SCALE$	CHECKED - JAR	REVISED -	
PLOT DATE = 03/19/2025	DATE - 05/23/2024	REVISED -	

STATE OF ILLINOIS
DEPARTMENT OF TRANSPORTATION

BLUETOOTH INSTALLATION PLAN
CERMAK RD AND WOLF RD

SCALE: 1" = 20' | SHEET OF SHEETS | STA. TO STA.

F.A.U RTE.	SECTION	COUNTY	TOTAL SHEETS	SHEET NO.
1453	2020-266-SUR, SW & TS	COOK/DUPAGE	492	327
		CONTRACT NO. 62N39		
	ILLINOIS	FED. AID PROJECT		

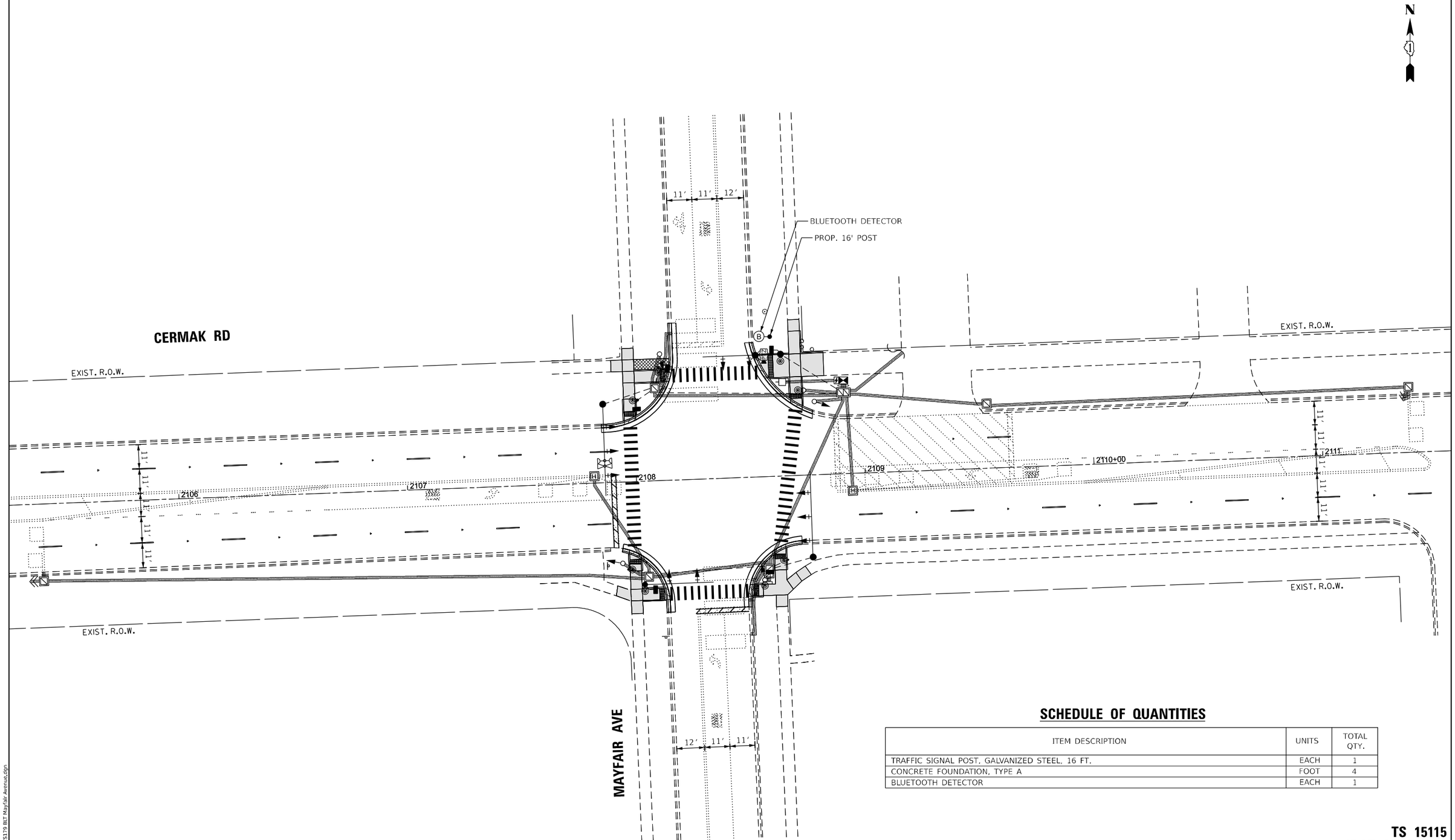

SCHEDULE OF QUANTITIES

ITEM DESCRIPTION	UNITS	TOTAL QTY.
TRAFFIC SIGNAL POST, GALVANIZED STEEL, 16 FT.	EACH	1
CONCRETE FOUNDATION, TYPE A	FOOT	4
BLUETOOTH DETECTOR	EACH	1

TS 15115
IDOT CENTRACS
FORMER ECON 102

TS SHT NO. 179

MODEL: $MODELNAMES
FILE NAME: D162N39-sh-TS179 BLT Mayfair Avenue.dgn

AMES Engineering, Inc.
CONSULTING ENGINEERS
6330 Belmont Road, Suite 4B
Downers Grove, IL 60516

USER NAME = msomer	DESIGNED - TM	REVISED -	
	DRAWN - TM, SR	REVISED -	
PLOT SCALE = $SCALE$	CHECKED - JAR	REVISED -	
PLOT DATE = 03/19/2025	DATE - 05/23/2024	REVISED -	

STATE OF ILLINOIS
DEPARTMENT OF TRANSPORTATION

BLUETOOTH INSTALLATION PLAN
CERMAK RD AND MAYFAIR AVE

SCALE: 1" = 20' | SHEET OF SHEETS | STA. TO STA.

F.A.U RTE.	SECTION	COUNTY	TOTAL SHEETS	SHEET NO.
1453	2020-266-SUR, SW & TS	COOK/DUPAGE	492	328
		CONTRACT NO. 62N39		
		ILLINOIS	FED. AID PROJECT	

SCHEDULE OF QUANTITIES

ITEM DESCRIPTION	UNITS	TOTAL QTY.
TRAFFIC SIGNAL POST, GALVANIZED STEEL, 16 FT.	EACH	1
CONCRETE FOUNDATION, TYPE A	FOOT	4
BLUETOOTH DETECTOR	EACH	1

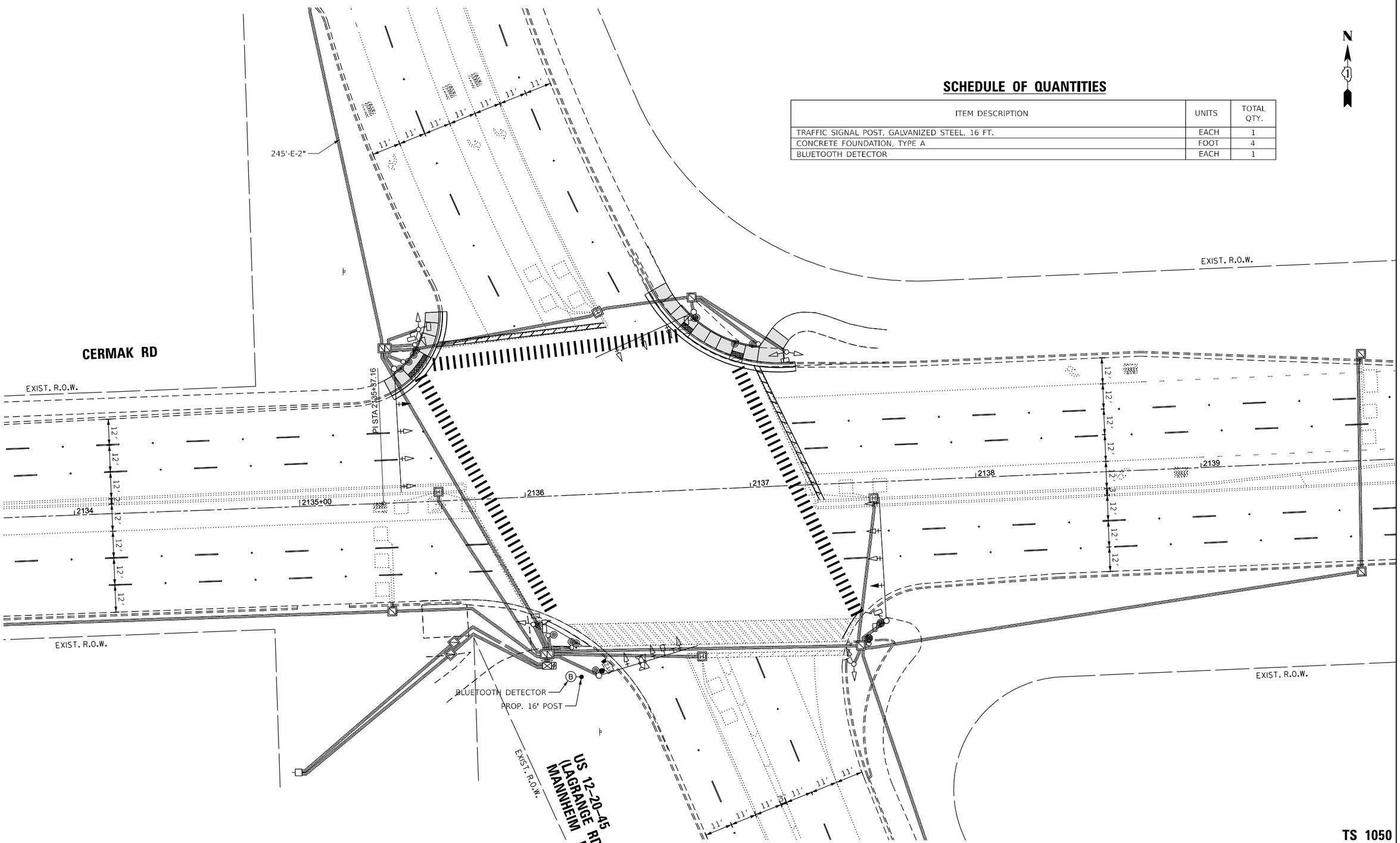

TS 1050
IDOT CENTRACS
FORMER ECON 102

TS SHT NO. 180

MODEL: $MODELNAME$
FILE NAME: D162N39-sht-TS180 BLT Mannheim Road.dgn

AMES Engineering, Inc.
CONSULTING ENGINEERS
6330 Belmont Road, Suite 4B
Downers Grove, IL 60516

USER NAME = msomer	DESIGNED - TM	REVISED -	
	DRAWN - TM, SR	REVISED -	
PLOT SCALE = $SCALE$	CHECKED - JAR	REVISED -	
PLOT DATE = 03/19/2025	DATE - 05/23/2024	REVISED -	

STATE OF ILLINOIS
DEPARTMENT OF TRANSPORTATION

BLUETOOTH INSTALLATION PLAN
CERMAK RD AND US 12-20-45 (LAGRANGE RD/MANNHEIM RD)

SCALE: 1" = 20' | SHEET OF SHEETS | STA. TO STA.

F.A.U RTE.	SECTION	COUNTY	TOTAL SHEETS	SHEET NO.
1453	2020-266-SUR, SW & TS	COOK/DUPAGE	492	329
		CONTRACT NO. 62N39		
	ILLINOIS	FED. AID PROJECT		

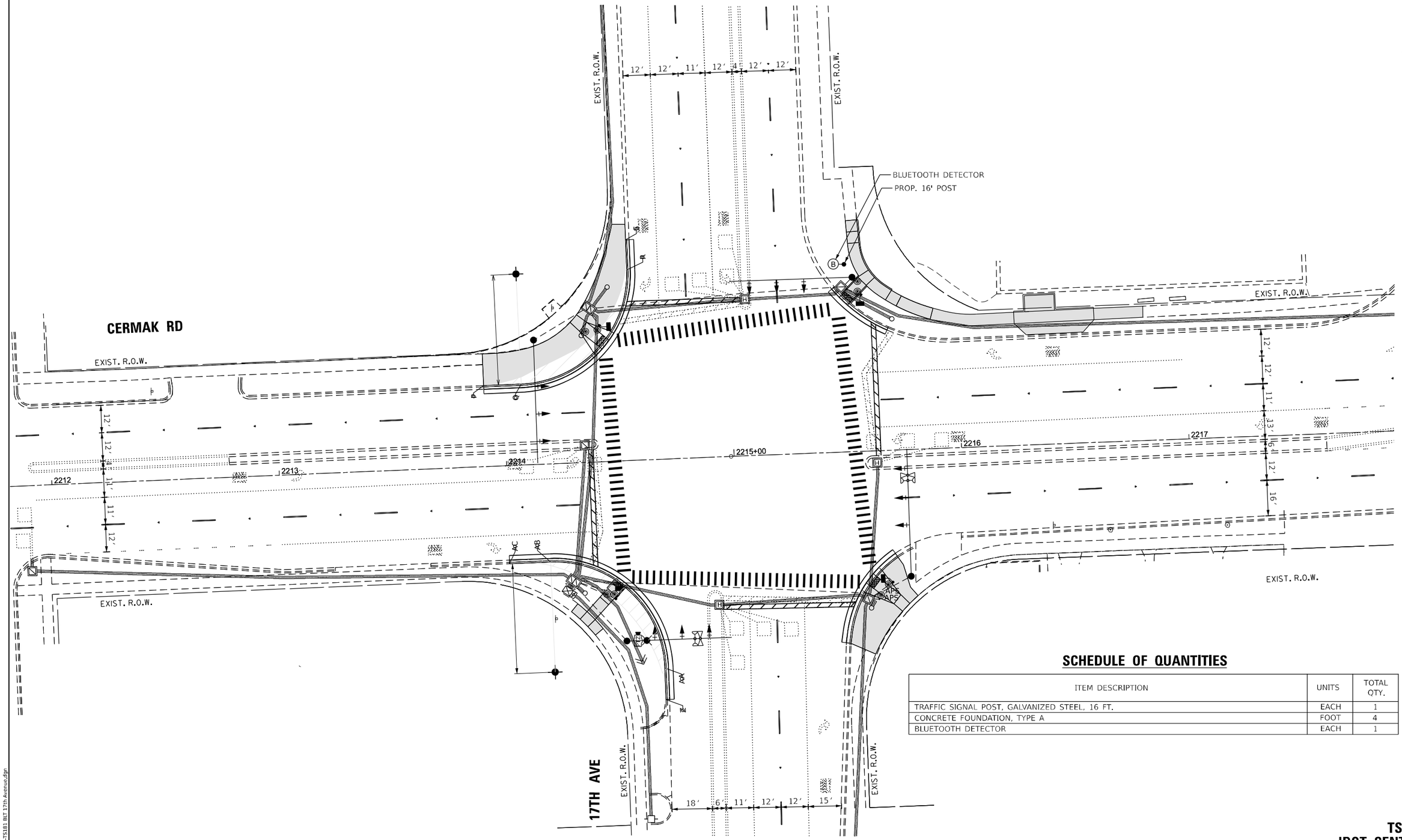

SCHEDULE OF QUANTITIES

ITEM DESCRIPTION	UNITS	TOTAL QTY.
TRAFFIC SIGNAL POST, GALVANIZED STEEL, 16 FT.	EACH	1
CONCRETE FOUNDATION, TYPE A	FOOT	4
BLUETOOTH DETECTOR	EACH	1

TS 3700
IDOT CENTRACS
FORMER ECON 27

TS SHT NO. 181

MODEL: $MODELNAME$
FILE NAME: D162N39-sht-TS181 BLT 17th Avenue.dgn

AMES Engineering, Inc.
CONSULTING ENGINEERS
6330 Belmont Road, Suite 4B
Downers Grove, IL 60516

USER NAME = msomer	DESIGNED - TM	REVISED -	
	DRAWN - TM, SR	REVISED -	
PLOT SCALE = $SCALE$	CHECKED - JAR	REVISED -	
PLOT DATE = 03/19/2025	DATE - 05/23/2024	REVISED -	

STATE OF ILLINOIS
DEPARTMENT OF TRANSPORTATION

BLUETOOTH INSTALLATION PLAN
CERMAK RD AND 17TH AVE

SCALE: 1" = 20' | SHEET OF SHEETS | STA. TO STA.

F.A.U RTE.	SECTION	COUNTY	TOTAL SHEETS	SHEET NO.
1453	2020-266-SUR, SW & TS	COOK/DUPAGE	492	330
		CONTRACT NO. 62N39		
		ILLINOIS	FED. AID PROJECT	

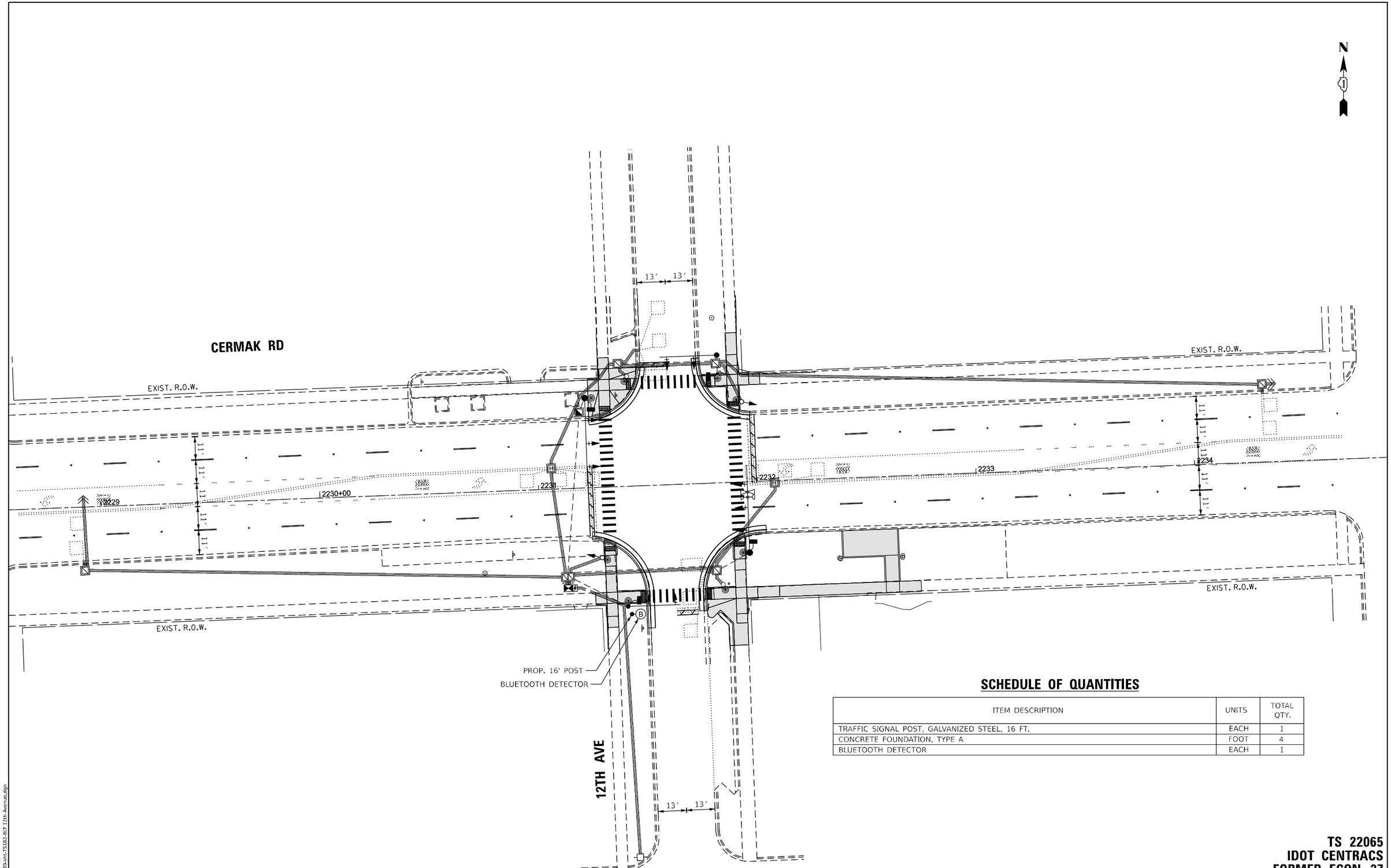

SCHEDULE OF QUANTITIES

ITEM DESCRIPTION	UNITS	TOTAL QTY.
TRAFFIC SIGNAL POST, GALVANIZED STEEL, 16 FT.	EACH	1
CONCRETE FOUNDATION, TYPE A	FOOT	4
BLUETOOTH DETECTOR	EACH	1

TS 22065
IDOT CENTRACS
FORMER ECON 27

TS SHT NO. 182

MODEL: $MODELNAME$
FILE NAME: D162N39-sht-TS182-BLT 12th Avenue.dgn

AMES Engineering, Inc.
CONSULTING ENGINEERS
6330 Belmont Road, Suite 4B
Downers Grove, IL 60516

USER NAME = msomer	DESIGNED - TM	REVISED -	
	DRAWN - TM, SR	REVISED -	
PLOT SCALE = $SCALE$	CHECKED - JAR	REVISED -	
PLOT DATE = 03/19/2025	DATE - 05/23/2024	REVISED -	

STATE OF ILLINOIS
DEPARTMENT OF TRANSPORTATION

BLUETOOTH INSTALLATION PLAN
CERMAK RD AND 12TH AVE

SCALE: 1" = 20' | SHEET OF SHEETS | STA. TO STA.

F.A.U RTE.	SECTION	COUNTY	TOTAL SHEETS	SHEET NO.
1453	2020-266-SUR, SW & TS	COOK/DUPAGE	492	331
		CONTRACT NO. 62N39		
		ILLINOIS	FED. AID PROJECT	

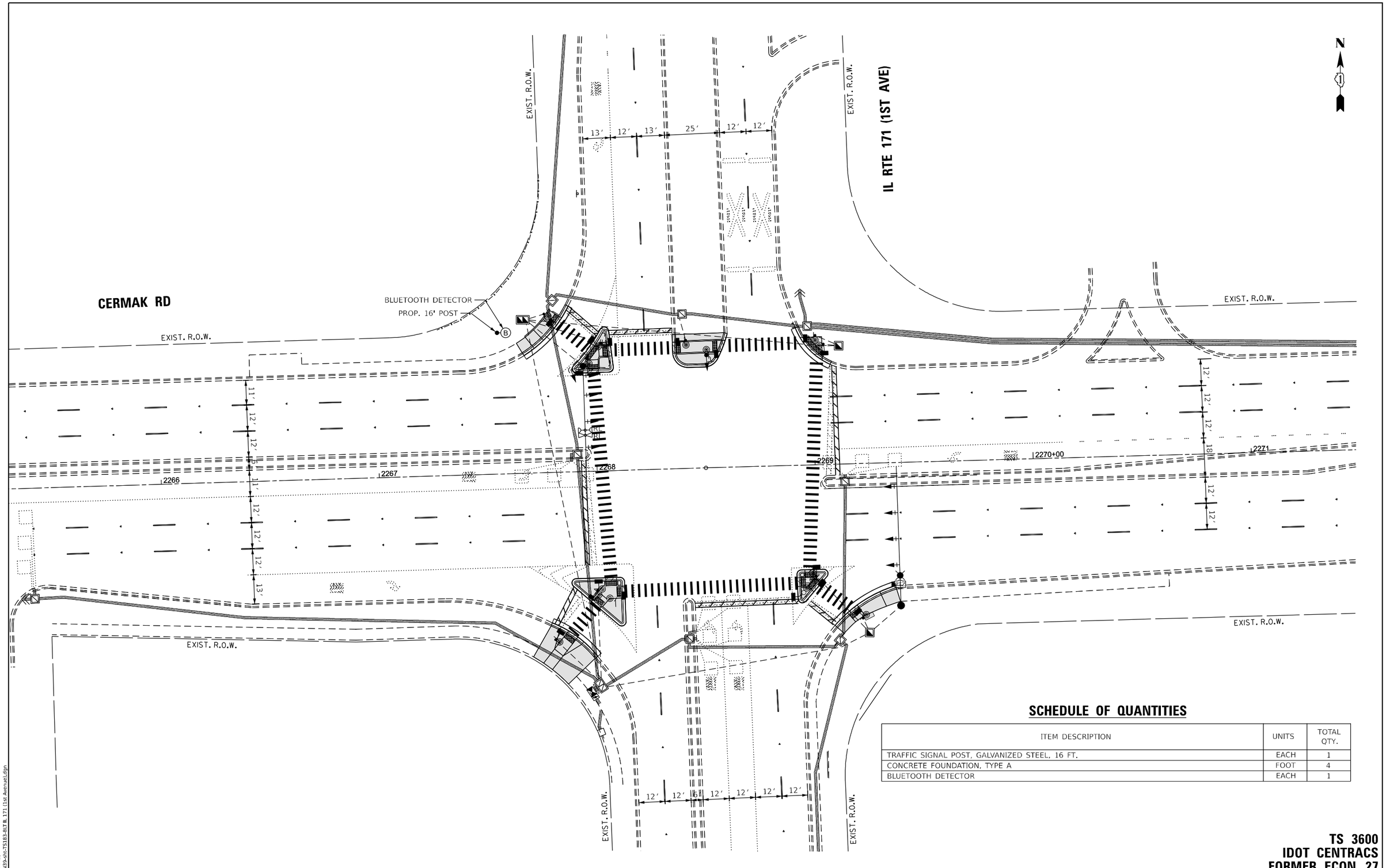

SCHEDULE OF QUANTITIES

ITEM DESCRIPTION	UNITS	TOTAL QTY.
TRAFFIC SIGNAL POST, GALVANIZED STEEL, 16 FT.	EACH	1
CONCRETE FOUNDATION, TYPE A	FOOT	4
BLUETOOTH DETECTOR	EACH	1

TS 3600
IDOT CENTRACS
FORMER ECON 27

TS SHT NO. 183

MODEL: $MODELNAME$
FILE NAME: D162N39-sht-TS183-BIT IL 171 (1st Avenue).dgn

AMES Engineering, Inc.
CONSULTING ENGINEERS
6330 Belmont Road, Suite 4B
Downers Grove, IL 60516

USER NAME = msomer	DESIGNED - TM	REVISED -	
	DRAWN - TM, SR	REVISED -	
PLOT SCALE = $SCALE$	CHECKED - JAR	REVISED -	
PLOT DATE = 03/19/2025	DATE - 05/23/2024	REVISED -	

STATE OF ILLINOIS
DEPARTMENT OF TRANSPORTATION

BLUETOOTH INSTALLATION PLAN
CERMAK RD AND IL RTE 171 (1ST AVE)

SCALE: 1" = 20' | SHEET OF SHEETS | STA. TO STA.

F.A.U RTE.	SECTION	COUNTY	TOTAL SHEETS	SHEET NO.
1453	2020-266-SUR, SW & TS	COOK/DUPAGE	492	332
		CONTRACT NO. 62N39		
		ILLINOIS	FED. AID PROJECT	

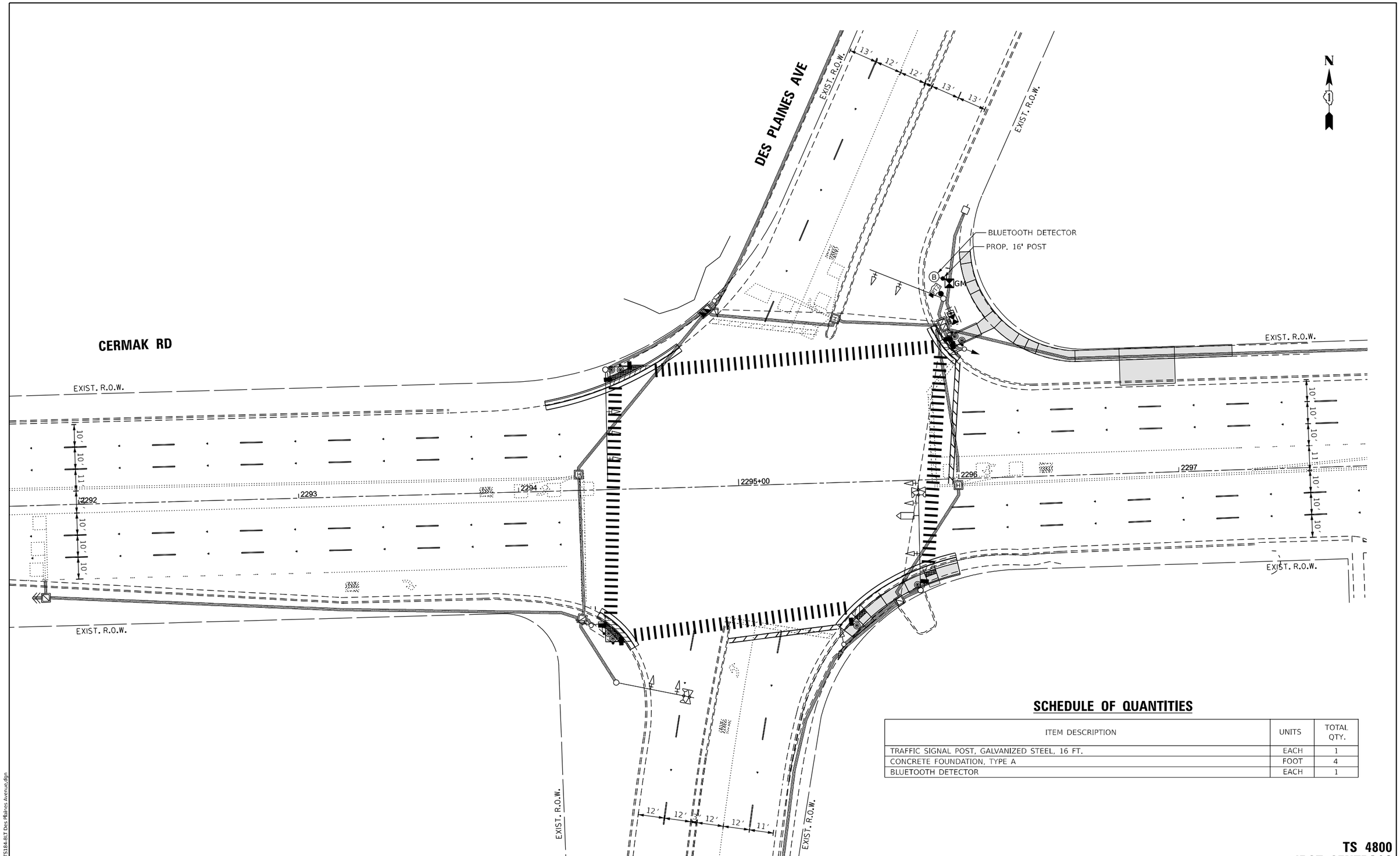

SCHEDULE OF QUANTITIES

ITEM DESCRIPTION	UNITS	TOTAL QTY.
TRAFFIC SIGNAL POST, GALVANIZED STEEL, 16 FT.	EACH	1
CONCRETE FOUNDATION, TYPE A	FOOT	4
BLUETOOTH DETECTOR	EACH	1

TS 4800
IDOT CENTRACS
FORMER ECON 27

TS SHT NO. 184

MODEL: $MODELNAME$
FILE NAME: D162N39-sht-TS184-BLT Des Plaines Avenue.dgn

AMES Engineering, Inc.
CONSULTING ENGINEERS
6330 Belmont Road, Suite 4B
Downers Grove, IL 60516

USER NAME = msomer	DESIGNED - TM	REVISED -	
	DRAWN - TM, SR	REVISED -	
PLOT SCALE = $SCALE$	CHECKED - JAR	REVISED -	
PLOT DATE = 03/19/2025	DATE - 05/23/2024	REVISED -	

STATE OF ILLINOIS
DEPARTMENT OF TRANSPORTATION

BLUETOOTH INSTALLATION PLAN
CERMAK RD AND DES PLAINES AVE

SCALE: 1" = 20' | SHEET OF SHEETS | STA. TO STA.

F.A.U RTE.	SECTION	COUNTY	TOTAL SHEETS	SHEET NO.
1453	2020-266-SUR, SW & TS	COOK/DUPAGE	492	333
		CONTRACT NO. 62N39		
		ILLINOIS	FED. AID PROJECT	

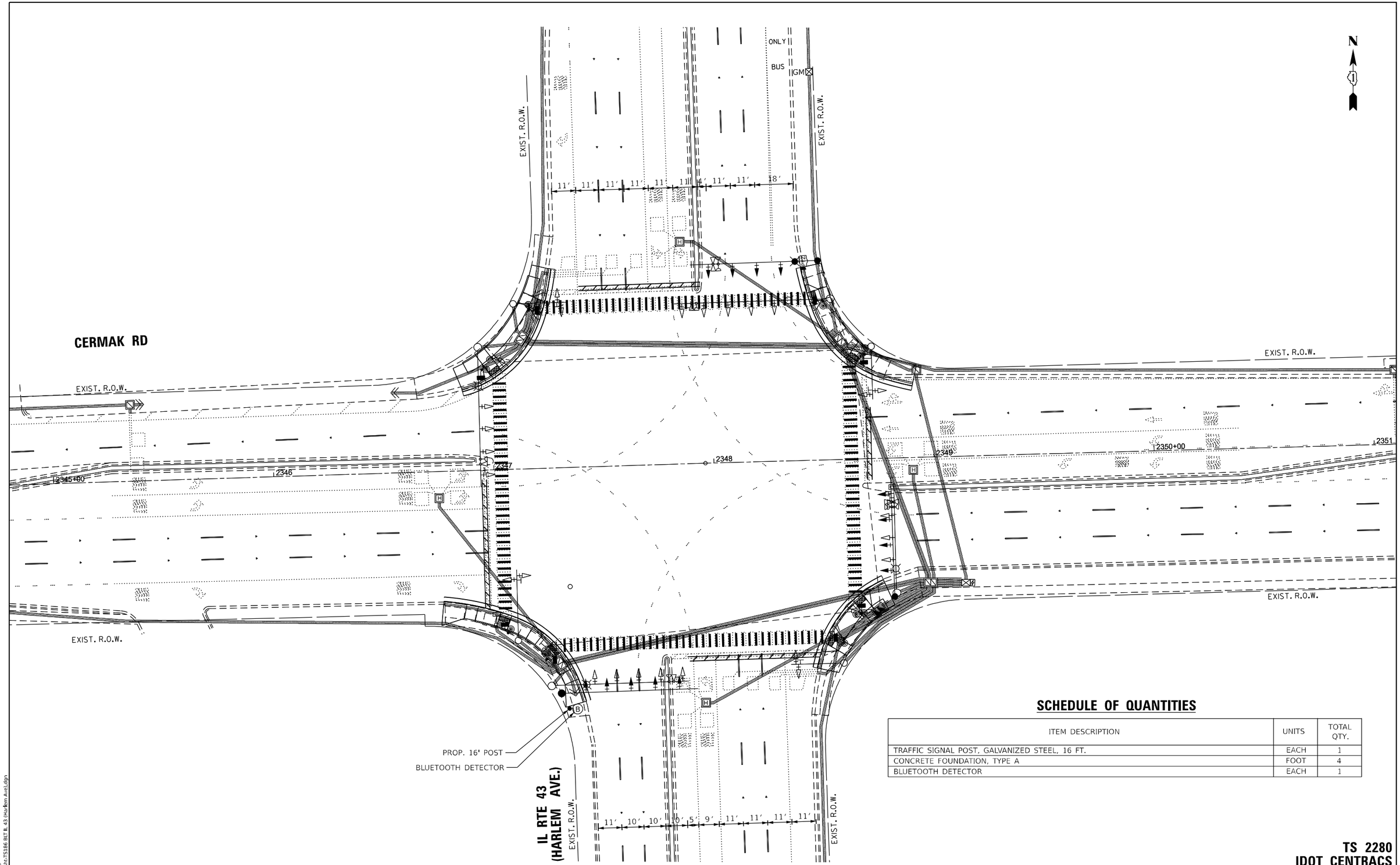

SCHEDULE OF QUANTITIES

ITEM DESCRIPTION	UNITS	TOTAL QTY.
TRAFFIC SIGNAL POST, GALVANIZED STEEL, 16 FT.	EACH	1
CONCRETE FOUNDATION, TYPE A	FOOT	4
BLUETOOTH DETECTOR	EACH	1

TS 2280
IDOT CENTRACS
FORMER ECON 30

TS SHT NO. 186

MODEL: $MODELNAME$
FILE NAME: D162N39-sht-TS186 BLT IL 43 (Harlem Ave).dgn

AMES Engineering, Inc.
CONSULTING ENGINEERS
6330 Belmont Road, Suite 4B
Downers Grove, IL 60516

USER NAME = msomer	DESIGNED - TM	REVISED -	
	DRAWN - TM, SR	REVISED -	
PLOT SCALE = $SCALE$	CHECKED - JAR	REVISED -	
PLOT DATE = 03/19/2025	DATE - 05/23/2024	REVISED -	

STATE OF ILLINOIS
DEPARTMENT OF TRANSPORTATION

BLUETOOTH INSTALLATION PLAN
CERMAK RD AND IL RTE 43 (HARLEM AVE)

SCALE: 1" = 20' | SHEET OF SHEETS | STA. TO STA.

F.A.U RTE.	SECTION	COUNTY	TOTAL SHEETS	SHEET NO.
1453	2020-266-SUR, SW & TS	COOK/DUPAGE	492	334
		CONTRACT NO. 62N39		
		ILLINOIS	FED. AID PROJECT	

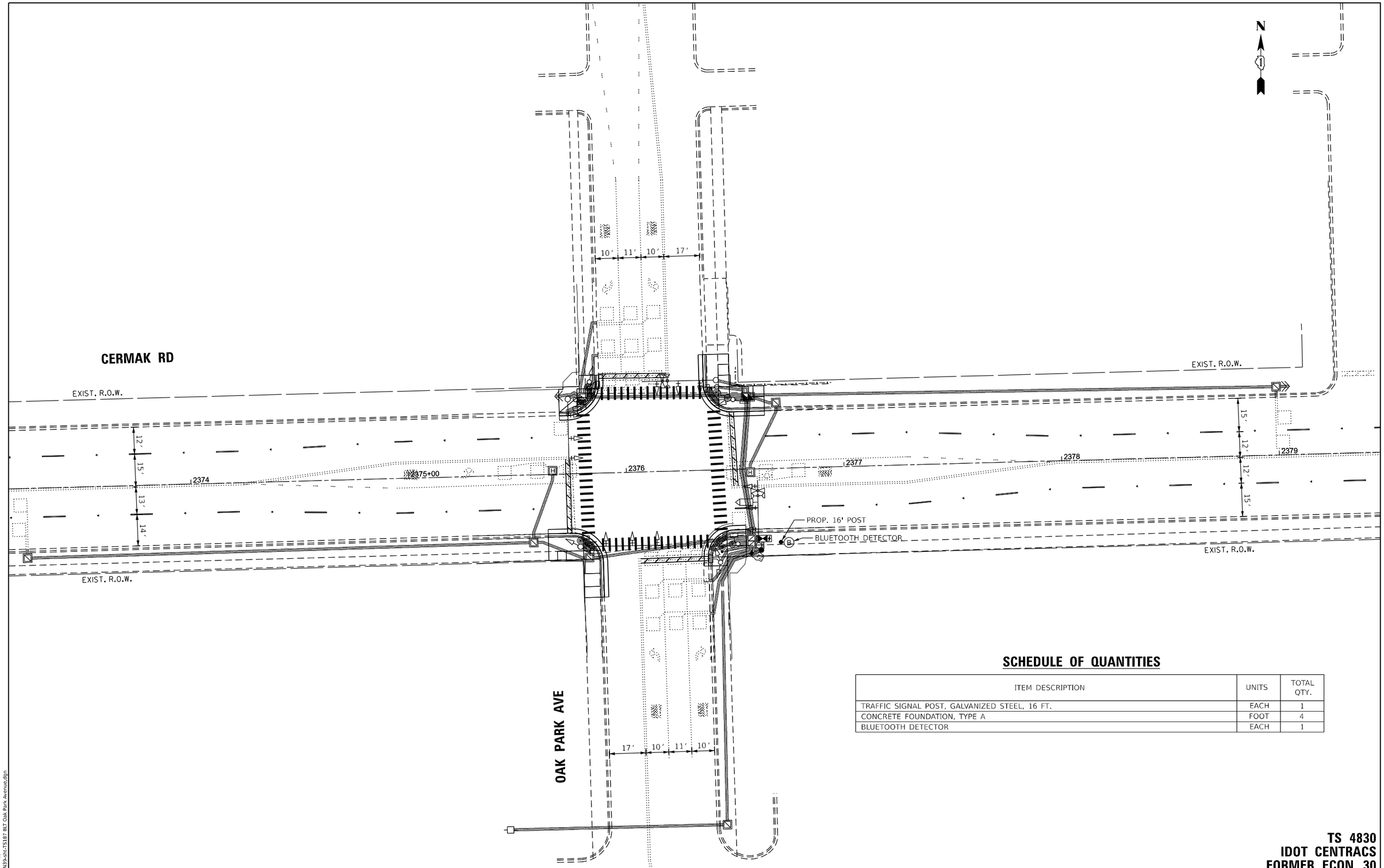

SCHEDULE OF QUANTITIES

ITEM DESCRIPTION	UNITS	TOTAL QTY.
TRAFFIC SIGNAL POST, GALVANIZED STEEL, 16 FT.	EACH	1
CONCRETE FOUNDATION, TYPE A	FOOT	4
BLUETOOTH DETECTOR	EACH	1

TS 4830
IDOT CENTRACS
FORMER ECON 30

TS SHT NO. 187

MODEL: $MODELNAME$
FILE NAME: D162N39-sht-TS187 BLT Oak Park Avenue.dgn

AMES Engineering, Inc.
CONSULTING ENGINEERS
6330 Belmont Road, Suite 4B
Downers Grove, IL 60516

USER NAME = msomer	DESIGNED - TM	REVISED -	
	DRAWN - TM, SR	REVISED -	
PLOT SCALE = $SCALE$	CHECKED - JAR	REVISED -	
PLOT DATE = 03/19/2025	DATE - 05/23/2024	REVISED -	

STATE OF ILLINOIS
DEPARTMENT OF TRANSPORTATION

BLUETOOTH INSTALLATION PLAN
CERMAK RD AND OAK PARK AVE

SCALE: 1" = 20' | SHEET OF SHEETS | STA. TO STA.

F.A.U RTE.	SECTION	COUNTY	TOTAL SHEETS	SHEET NO.
1453	2020-266-SUR, SW & TS	COOK/DUPAGE	492	335
		CONTRACT NO. 62N39		
		ILLINOIS	FED. AID PROJECT	

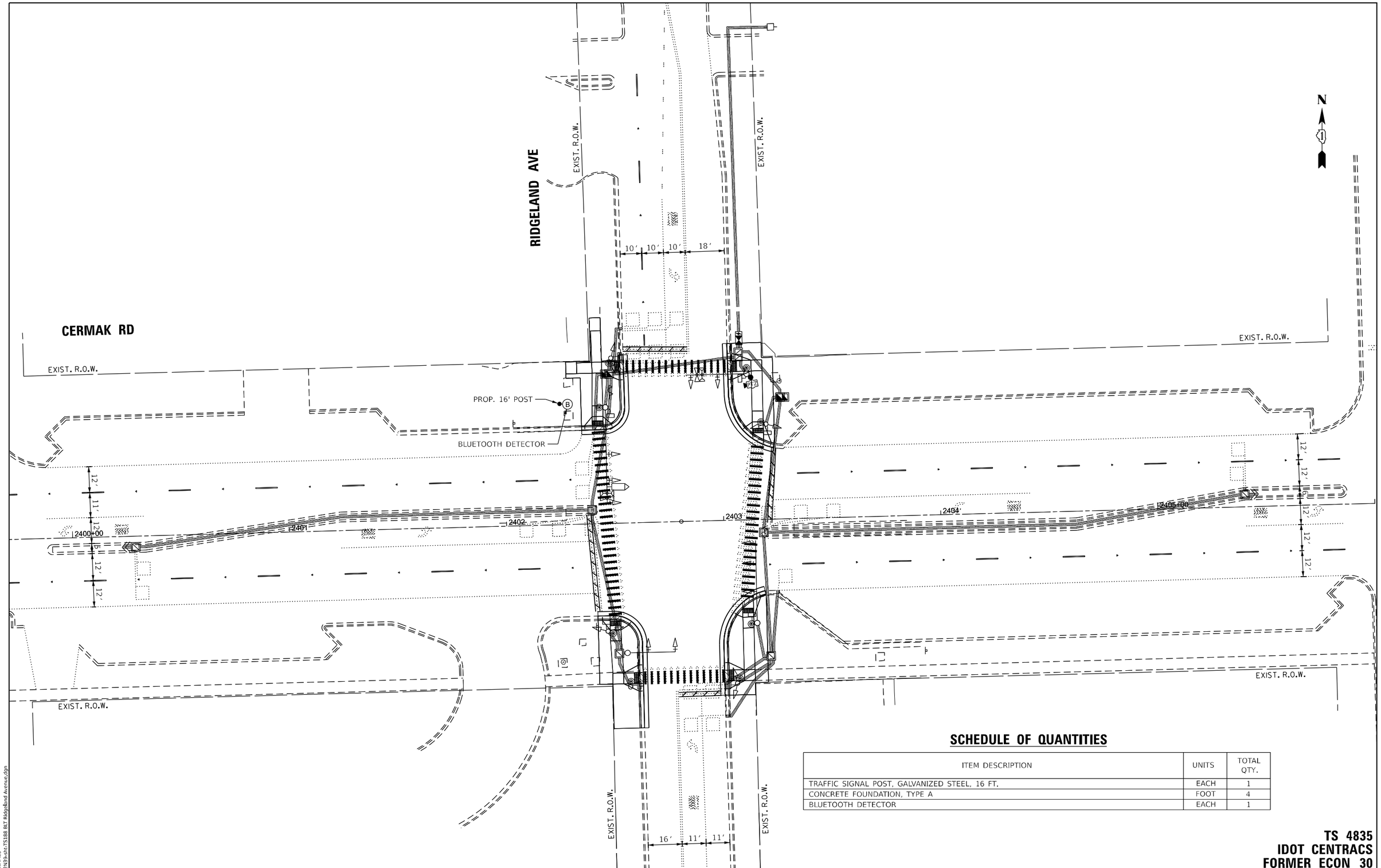

SCHEDULE OF QUANTITIES

ITEM DESCRIPTION	UNITS	TOTAL QTY.
TRAFFIC SIGNAL POST, GALVANIZED STEEL, 16 FT.	EACH	1
CONCRETE FOUNDATION, TYPE A	FOOT	4
BLUETOOTH DETECTOR	EACH	1

TS 4835
IDOT CENTRACS
FORMER ECON 30

TS SHT NO. 188

MODEL: $MODELNAME$
FILE NAME: D162N39-sht-TS188 BLT Ridgeland Avenue.dgn

AMES Engineering, Inc.
CONSULTING ENGINEERS
6330 Belmont Road, Suite 4B
Downers Grove, IL 60516

USER NAME = msomer	DESIGNED - TM	REVISED -	
	DRAWN - TM, SR	REVISED -	
PLOT SCALE = $SCALE$	CHECKED - JAR	REVISED -	
PLOT DATE = 03/19/2025	DATE - 05/23/2024	REVISED -	

STATE OF ILLINOIS
DEPARTMENT OF TRANSPORTATION

BLUETOOTH INSTALLATION PLAN
CERMAK RD AND RIDGELAND AVE

SCALE: 1" = 20' | SHEET OF SHEETS | STA. TO STA.

F.A.U RTE.	SECTION	COUNTY	TOTAL SHEETS	SHEET NO.
1453	2020-266-SUR, SW & TS	COOK/DUPAGE	492	336
		CONTRACT NO. 62N39		
		ILLINOIS	FED. AID PROJECT	

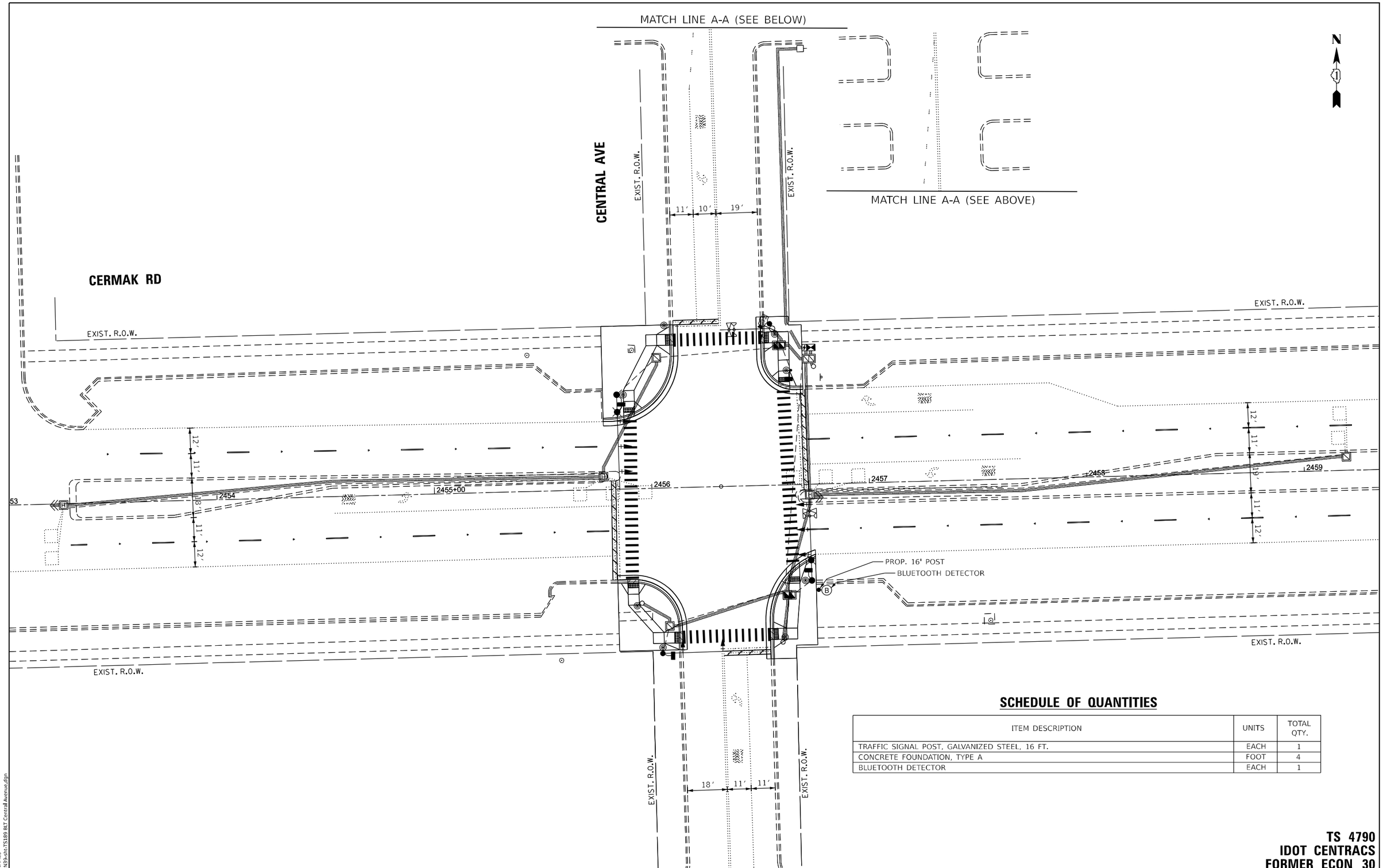

SCHEDULE OF QUANTITIES

ITEM DESCRIPTION	UNITS	TOTAL QTY.
TRAFFIC SIGNAL POST, GALVANIZED STEEL, 16 FT.	EACH	1
CONCRETE FOUNDATION, TYPE A	FOOT	4
BLUETOOTH DETECTOR	EACH	1

TS 4790
IDOT CENTRACS
FORMER ECON 30

TS SHT NO. 189

MODEL: $MODELNAME$
FILE NAME: D162N39-sht-TS189 BLT Central Avenue.dgn

AMES Engineering, Inc.
CONSULTING ENGINEERS
6330 Belmont Road, Suite 4B
Downers Grove, IL 60516

USER NAME = msomer	DESIGNED - TM	REVISED -	
	DRAWN - TM, SR	REVISED -	
PLOT SCALE = $SCALE$	CHECKED - JAR	REVISED -	
PLOT DATE = 03/19/2025	DATE - 05/23/2024	REVISED -	

STATE OF ILLINOIS
DEPARTMENT OF TRANSPORTATION

BLUETOOTH INSTALLATION PLAN
CERMAK RD AND CENTRAL AVE

SCALE: 1" = 20' | SHEET OF SHEETS | STA. TO STA.

F.A.U RTE.	SECTION	COUNTY	TOTAL SHEETS	SHEET NO.
1453	2020-266-SUR, SW & TS	COOK/DUPAGE	492	337
		CONTRACT NO. 62N39		
	ILLINOIS	FED. AID PROJECT		

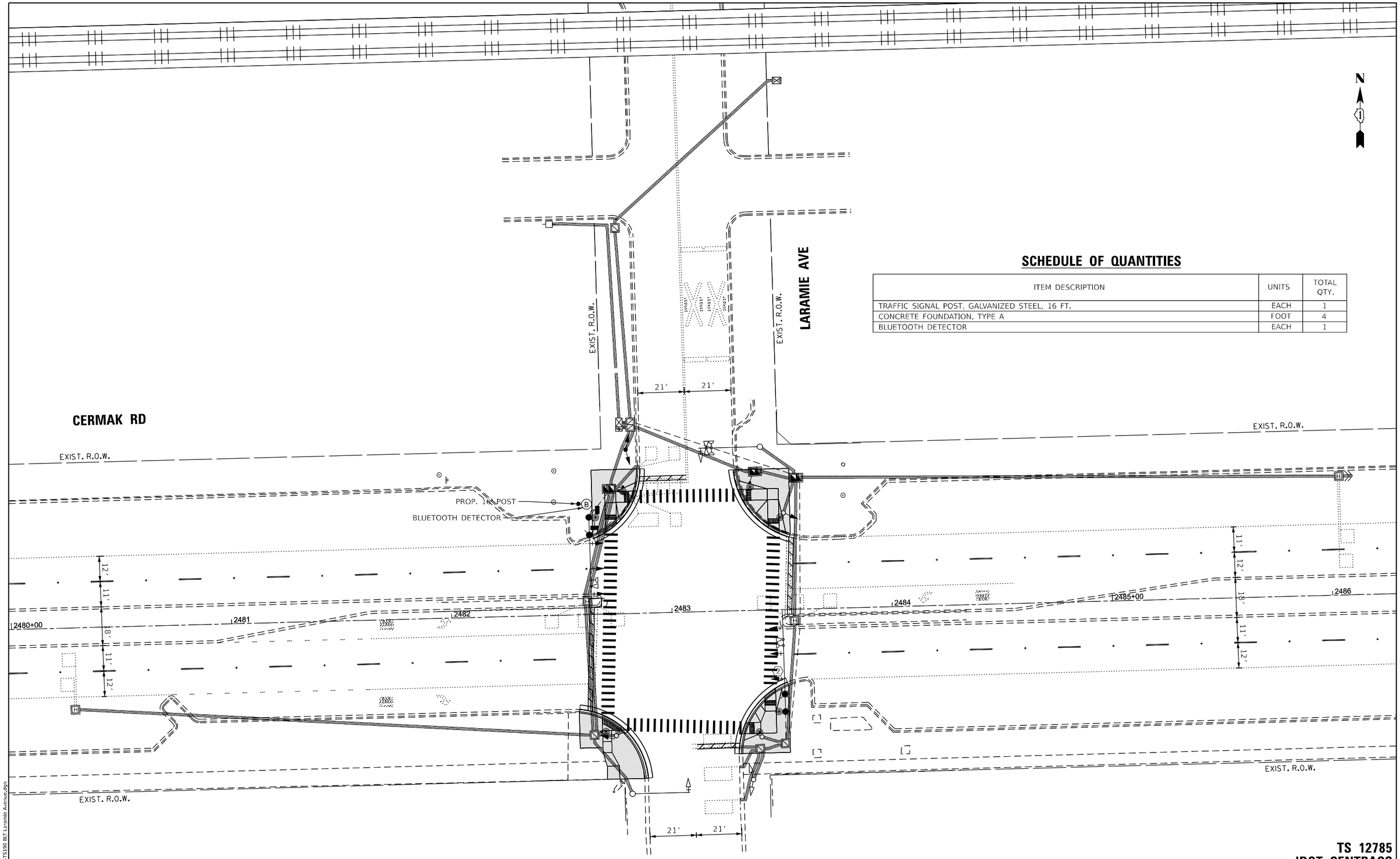

SCHEDULE OF QUANTITIES

ITEM DESCRIPTION	UNITS	TOTAL QTY.
TRAFFIC SIGNAL POST, GALVANIZED STEEL, 16 FT.	EACH	1
CONCRETE FOUNDATION, TYPE A	FOOT	4
BLUETOOTH DETECTOR	EACH	1

TS 12785
IDOT CENTRACS
FORMER ECON 108

TS SHT NO. 190

MODEL: $MODELNAME$
FILE NAME: D162N39-sht-TS190 BLT Laramie Avenue.dgn

AMES Engineering, Inc.
CONSULTING ENGINEERS
6330 Belmont Road, Suite 4B
Downers Grove, IL 60516

USER NAME = msomer	DESIGNED - TM	REVISED -	
	DRAWN - TM, SR	REVISED -	
PLOT SCALE = $SCALE$	CHECKED - JAR	REVISED -	
PLOT DATE = 03/19/2025	DATE - 05/23/2024	REVISED -	

STATE OF ILLINOIS
DEPARTMENT OF TRANSPORTATION

BLUETOOTH INSTALLATION PLAN
CERMAK RD AND LARAMIE AVE

SCALE: 1" = 20' | SHEET OF SHEETS | STA. TO STA.

F.A.U RTE.	SECTION	COUNTY	TOTAL SHEETS	SHEET NO.
1453	2020-266-SUR, SW & TS	COOK/DUPAGE	492	338
		CONTRACT NO. 62N39		
		ILLINOIS	FED. AID PROJECT	

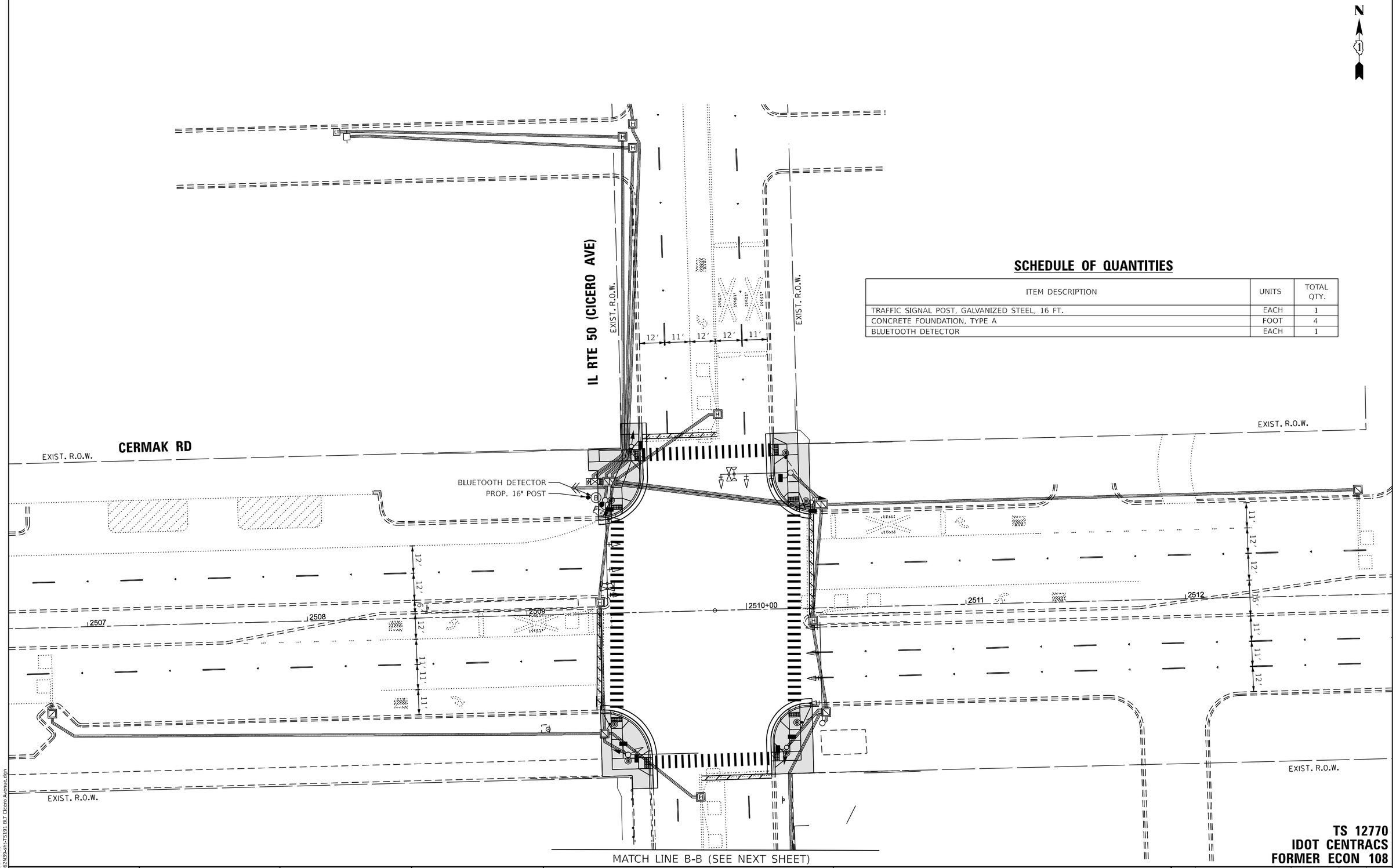

SCHEDULE OF QUANTITIES

ITEM DESCRIPTION	UNITS	TOTAL QTY.
TRAFFIC SIGNAL POST, GALVANIZED STEEL, 16 FT.	EACH	1
CONCRETE FOUNDATION, TYPE A	FOOT	4
BLUETOOTH DETECTOR	EACH	1

TS 12770
IDOT CENTRACS
FORMER ECON 108

TS SHT NO. 191

MODEL: $MODELNAME$
FILE NAME: D162N39-sh-TS191 BLT Cicero Avenue.dgn

AMES Engineering, Inc.
CONSULTING ENGINEERS
6330 Belmont Road, Suite 4B
Downers Grove, IL 60516

USER NAME = msomer	DESIGNED - TM	REVISED -	
	DRAWN - TM, SR	REVISED -	
PLOT SCALE = $SCALE$	CHECKED - JAR	REVISED -	
PLOT DATE = 03/19/2025	DATE - 05/23/2024	REVISED -	

STATE OF ILLINOIS
DEPARTMENT OF TRANSPORTATION

BLUETOOTH INSTALLATION PLAN
CERMAK RD AND IL RTE 50 (CICERO AVE)

SCALE: 1" = 20' | SHEET OF SHEETS | STA. TO STA.

F.A.U RTE.	SECTION	COUNTY	TOTAL SHEETS	SHEET NO.
1453	2020-266-SUR, SW & TS	COOK/DUPAGE	492	339
		CONTRACT NO. 62N39		
		ILLINOIS	FED. AID PROJECT	

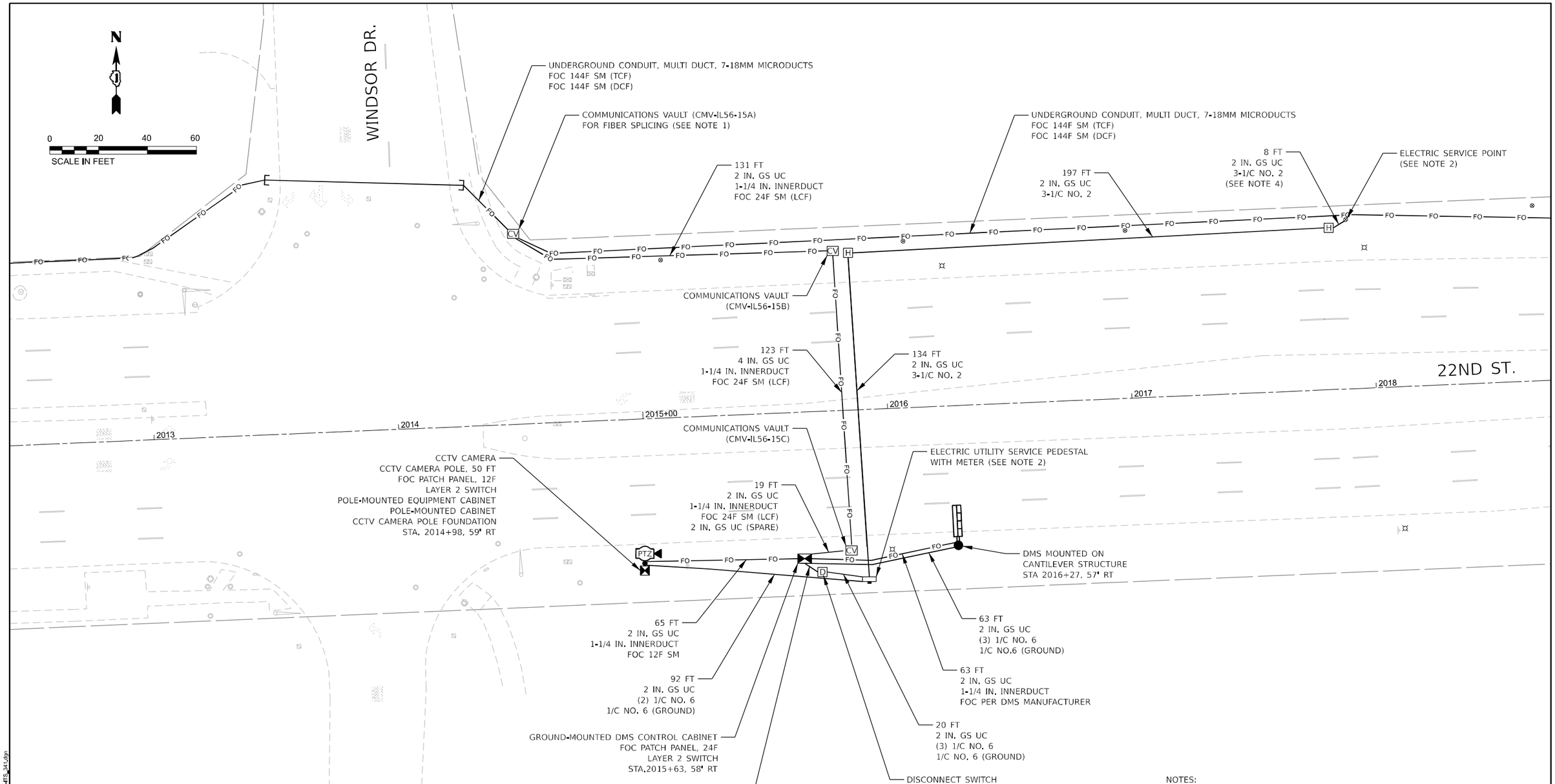

NOTES:

1. CONTRACTOR SHALL FUSION SPLICE LATERAL CABLE-FIBER (LCF) TO DISTRIBUTION CABLE-FIBER (DCF). TRUNK CABLE-FIBER (TCF) SHALL NOT BE CUT OR SPLICED. SEE FIBER SPLICING DIAGRAMS AND PROPOSED FIBER ROUTE PLANS FOR FURTHER DETAILS. WORK SHALL BE COORDINATED WITH SPLICING FOR TRAFFIC SIGNAL CABINET.
2. FINAL SERVICE LOCATION TO BE DETERMINED IN THE FIELD IN COORDINATION WITH COMED WITH FINAL QUANTITIES MEASURED ACCORDINGLY.
3. STATION LOCATION OF PROPOSED FIELD ELEMENTS ARE PROVIDED FOR REFERENCE. FINAL INSTALLATION SHALL BE ADJUSTED IN WITH VERIFIED UTILITY LOCATIONS.
4. ELECTRIC CABLE SLACK SHALL BE INCLUDED FOR SERVICE CONNECTION IN COORDINATION WITH COMED.

ITS–01

MODEL: Default
FILE NAME: 2-268408' EDOT IL 58 Smart Corridor\Work\CADD\Final_AMES\ITS 62N39\D162N39ITS_34.dgn

PARSONS	USER NAME = $USER$	DESIGNED - YJ	REVISED -	STATE OF ILLINOIS DEPARTMENT OF TRANSPORTATION	EASTBOUND DMS SITE PLAN 22ND ST./CERMAK RD. EAST OF WINDSOR DR.
		DRAWN - MT	REVISED -		
	PLOT SCALE = $SCALE$	CHECKED - RCB	REVISED -		
	PLOT DATE = 11/6/2024	DATE - 11-22-2024	REVISED -		SCALE: 1"=20' SHEET 1 OF 1 SHEETS STA. TO STA.

F.A.P. RTE.	SECTION	COUNTY	TOTAL SHEETS	SHEET NO.
365	2020-265-SUR, SW & TS	DUPAGE/COOK	492	340
		CONTRACT NO. 62N39		
	ILLINOIS	FED. AID PROJECT		

Long Section Number

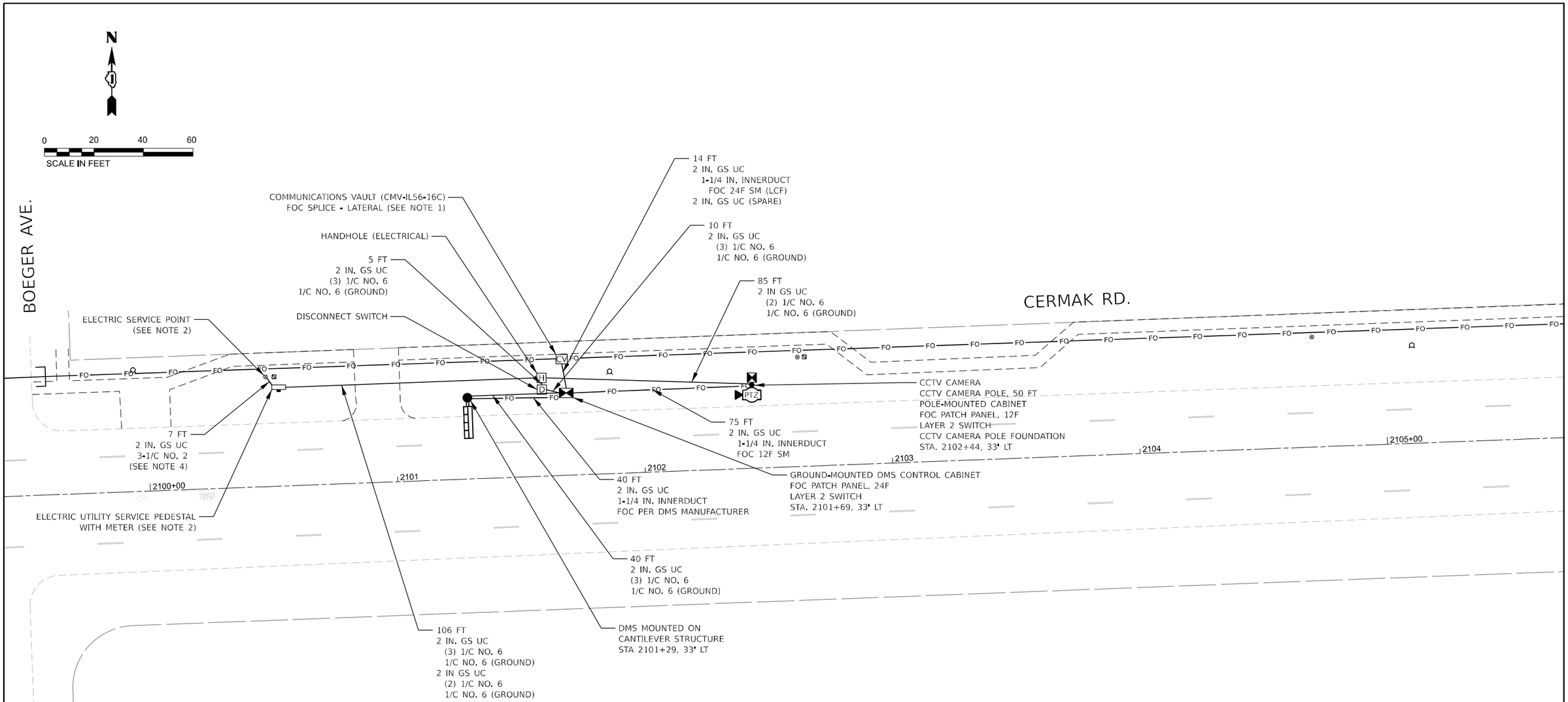

NOTES:

1. CONTRACTOR SHALL FUSION SPLICE LATERAL CABLE-FIBER (LCF) TO DISTRIBUTION CABLE-FIBER (DCF). TRUNK CABLE-FIBER (TCF) SHALL NOT BE CUT OR SPLICED. SEE FIBER SPLICING DIAGRAMS AND PROPOSED FIBER ROUTE PLANS FOR FURTHER DETAILS.
2. FINAL SERVICE LOCATION TO BE DETERMINED IN THE FIELD IN COORDINATION WITH COMED WITH FINAL QUANTITIES MEASURED ACCORDINGLY.
3. STATION LOCATION OF PROPOSED FIELD ELEMENTS ARE PROVIDED FOR REFERENCE. FINAL INSTALLATION SHALL BE ADJUSTED IN COORDINATION WITH VERIFIED UTILITY LOCATIONS.
4. ELECTRIC CABLE SLACK SHALL BE INCLUDED FOR SERVICE CONNECTION IN COORDINATION WITH COMED.

ITS–02

MODEL: Default
FILE NAME: 2484087 IDOT IL 56 Smart Corridor\Work\CADD\Plans_AMES\ITS 62N39\D162N39ITS_342.dgn

PARSONS	USER NAME = $USER$	DESIGNED - YJ	REVISED -	STATE OF ILLINOIS DEPARTMENT OF TRANSPORTATION	WESTBOUND DMS SITE PLAN 22ND ST./CERMAK RD. EAST OF BOEGER AV.
		DRAWN - MT	REVISED -		
	PLOT SCALE = $SCALES	CHECKED - RCB	REVISED -		
	PLOT DATE = 11/6/2024	DATE - 11-22-2024	REVISED -		SCALE: 1"=20' SHEET 1 OF 1 SHEETS STA. TO STA.

F.A.P. RTE.	SECTION	COUNTY	TOTAL SHEETS	SHEET NO.
365	2020-265-SUR, SW & TS	DUPAGE/COOK	492	341
		CONTRACT NO. 62N39		
	ILLINOIS	FED. AID PROJECT		

Long Section Number

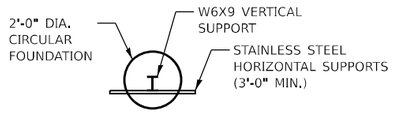

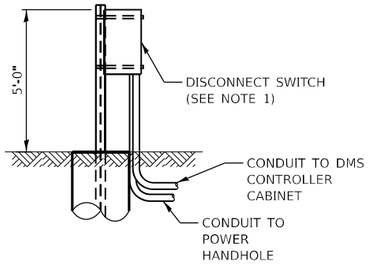

30A-2P NEMA 4X DISCONNECT MOUNTED ON SUPPORT DETAIL

(NOT TO SCALE)

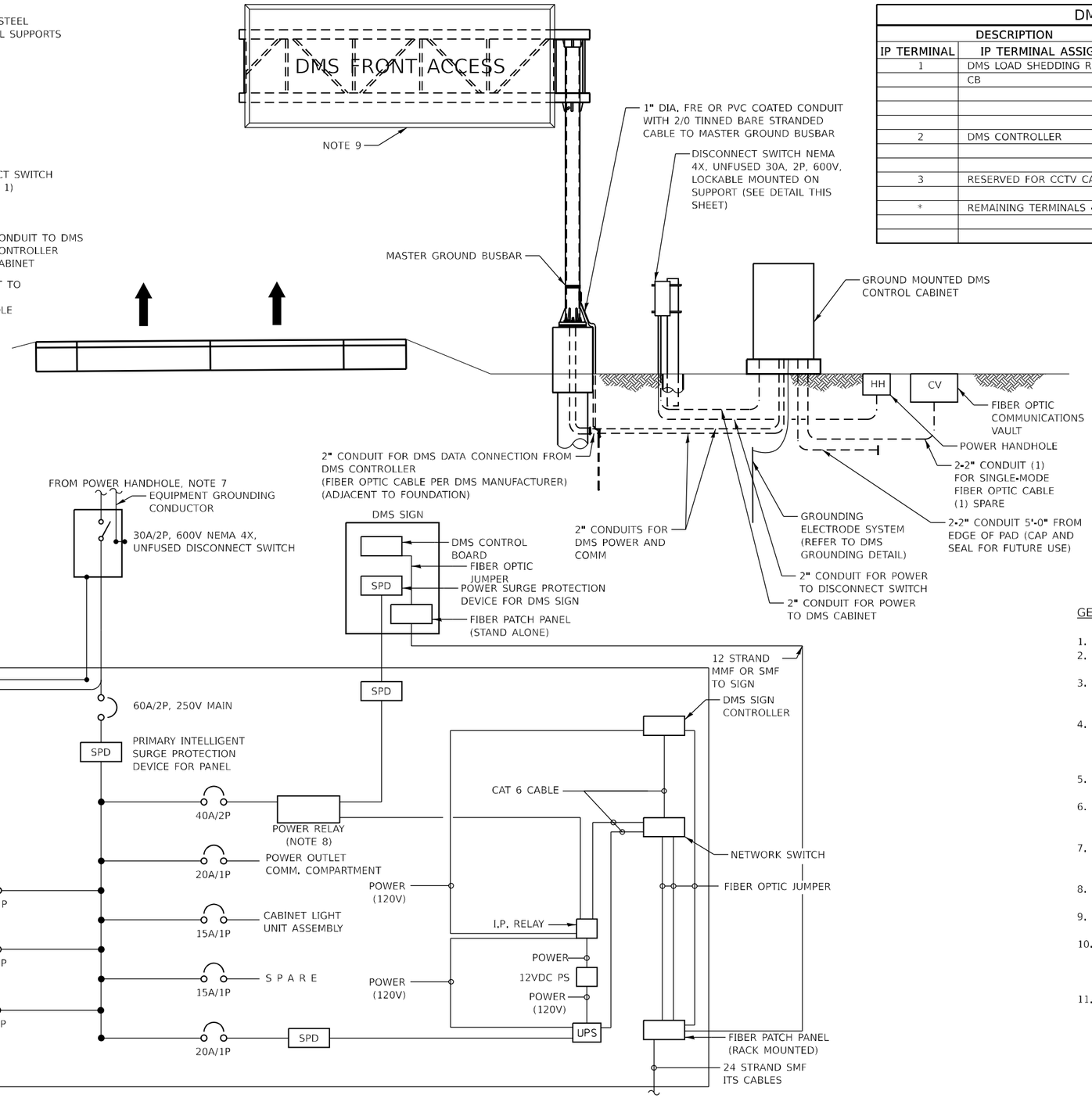

POWER WIRING SCHEMATIC FOR 100A PANEL, 120 / 240V LOAD CENTER OF DMS CABINET

(NOT TO SCALE)

COMMUNICATION RISER

(NOT TO SCALE)

DMS CABINET - IP RELAY WIRING TABLE

DESCRIPTION		CONNECTION FROM		CONNECTION TO	
IP TERMINAL	IP TERMINAL ASSIGNMENT	DEVICE	CONNECTION	DEVICE	CONNECTION
1	DMS LOAD SHEDDING RELAY	IP_RELAY	12VDC (+)	CB	CB1A
	CB	CB1B	IP_RELAY	3 COMM	
		IP_RELAY	3 NC	LOAD SHED RELAY	COIL (+)
		SPLICE BLOCK	120 V	IP_RELAY	NC
2	DMS CONTROLLER	IP_RELAY	4 NC	POWER OUTLET #1	HOT
				(COMMUNICATION)	
3	RESERVED FOR CCTV CAMERA				
*	REMAINING TERMINALS - OPEN				

GENERAL NOTES:

1. FURNISH AND INSTALL SERVICE DISCONNECT ON W6X9 SUPPORT.
2. THIS IS A DIAGRAMMATIC SCHEMATIC. ALL BREAKERS AND LOAD CENTERS SHALL BE SIZED AND WIRED AS PER MANUFACTURER RECOMMENDATIONS.
3. ENTIRE COMPLETED SYSTEM SHALL BE GROUNDED AND BONDED IN ACCORDANCE WITH MOTOROLA R56 MANUAL AND THE APPLICABLE ARTICLES OF SECTION 250 OF THE NATIONAL ELECTRICAL CODE.
4. ALL UNDERGROUND CONDUITS SHALL BE COILABLE NON-METALLIC CONDUIT (CNC) AND ABOVE GRADE CONDUITS SHALL BE PVC-COATED RIGID GALVANIZED STEEL (PRGS) UNLESS OTHERWISE INDICATED ON THE PLANS. COUPLERS SHALL BE USED WHEN TRANSITIONING FROM CNC TO PRGS.
5. MOUNT CLAMPS ON 5'-0" ON CENTER MOUNTING. HARDWARE SHALL BE USED AS PER CONDUIT MANUFACTURER RECOMMENDATION.
6. CONTRACTOR SHALL SUPPLY AND INSTALL CABLE REDUCER LUGS WHERE SIZE OF CABLE ENTERING THE DISCONNECT IS MORE THAN RECOMMENDED SIZE DUE TO VOLTAGE DROP.
7. CONTRACTOR SHALL WIRE THE DMS CABINET AS PER MANUFACTURER RECOMMENDATIONS AND INDUSTRY STANDARDS, USING THIS SCHEMATIC AS GUIDANCE ONLY.
8. THE COM (COMMON) CONTACT AND NC (NORMALLY CLOSED) CONTACT ON RELAY CONTACTS OF DIN RELAY SHALL FOLLOW THE TABLE ABOVE.
9. REFER TO STRUCTURAL PLAN SHEETS FOR OVERHEAD SIGN STRUCTURE CANTILEVER TYPE STRUCTURE DETAILS.
10. TRANSFORMER SHALL BE FURNISHED BY UTILITY COMPANY. FOUNDATION AND TRANSFORMER GROUNDING BY CONTRACTOR SHALL BE IN ACCORDANCE WITH UTILITY COMPANY REQUIREMENTS AND MUST BE TIED INTO DMS SITE GROUNDING ELECTRODE SYSTEM.
11. FIBER PATCH PANEL IN DMS SIGN HOUSING SHALL BE A FACTORY TERMINATED UNIT WITH A 12-STRAND PIGTAIL CONNECTING TO RACK MOUNTED FIBER PATCH PANEL IN DMS CONTROLLER CABINET.

ITS-03

MODEL: M4TS-1103
FILE NAME: Z:\684087 IDOT IL 56 Smart Corridor\Work\CADD\From_AMES\ITS 62N39\D162N39-ITS_343.dgn

PARSONS

USER NAME = $USER$	DESIGNED - YJ	REVISED -
	DRAWN - MT	REVISED -
PLOT SCALE = $SCALE$	CHECKED - RCB	REVISED -
PLOT DATE = 11/6/2024	DATE - 11-22-2024	REVISED -

STATE OF ILLINOIS
DEPARTMENT OF TRANSPORTATION

DMS CABINET POWER
22ND ST./CERMAK RD.

SCALE: N.T.S. | SHEET 1 OF SHEETS | STA. TO STA.

F.A.P. RTE.	SECTION	COUNTY	TOTAL SHEETS	SHEET NO.
365	2020-265-SUR, SW & TS	DUPAGE/COOK	492	342

CONTRACT NO. 62N39

ILLINOIS FED. AID PROJECT

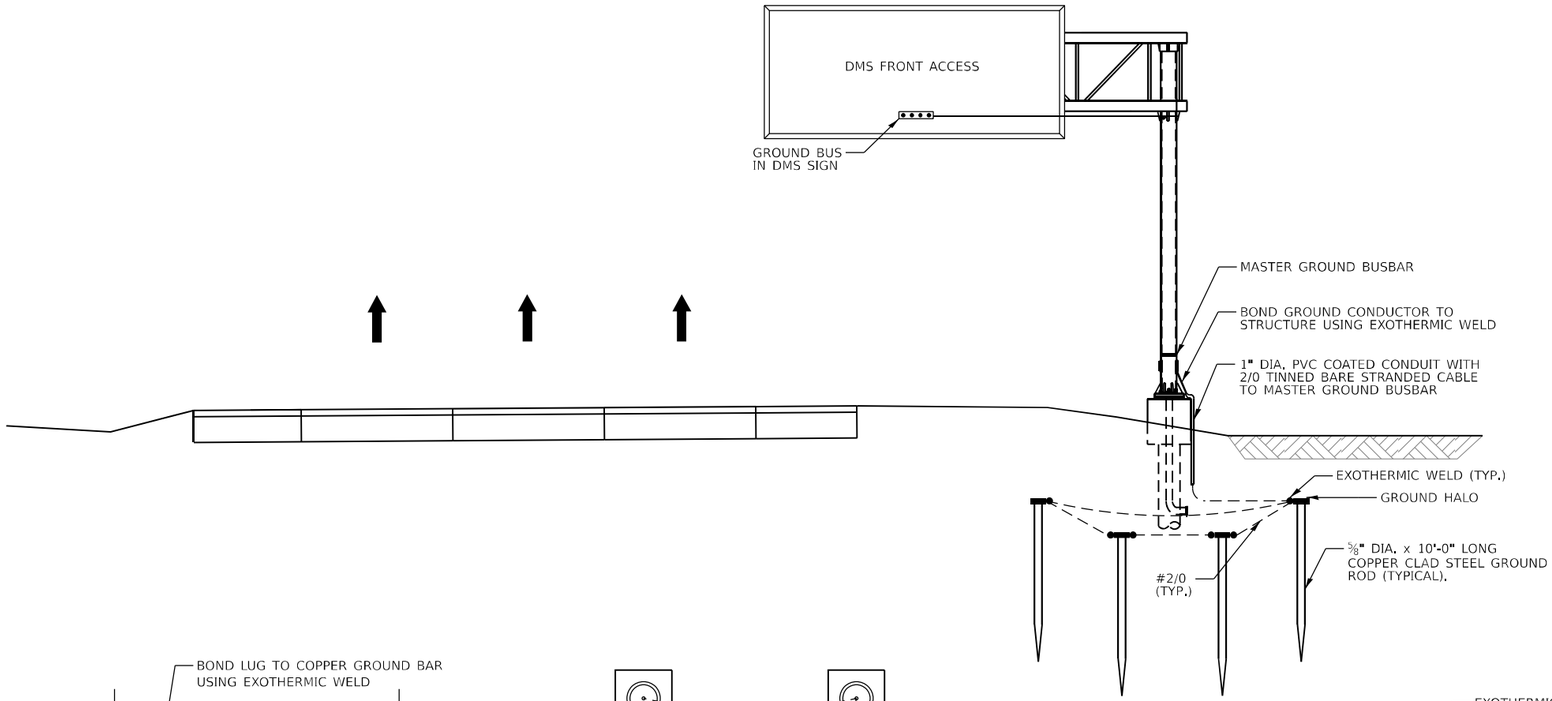

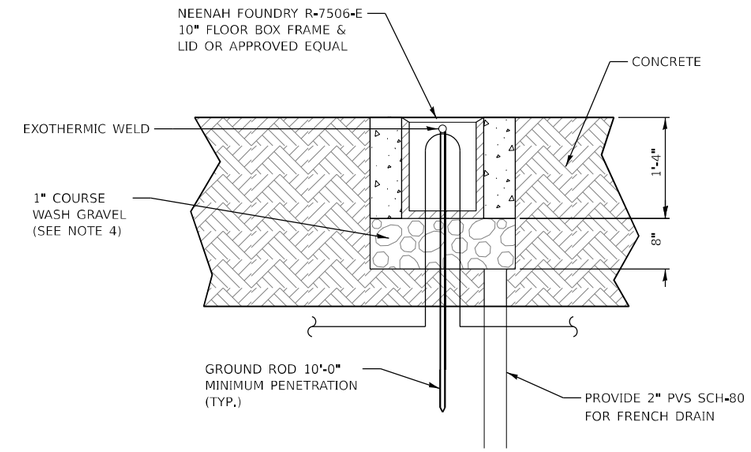

GROUND WELL ELEVATION DETAIL
N.T.S.

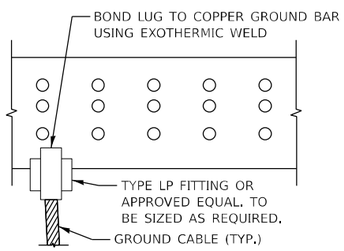

MASTER GROUND BUS BAR CONNECTION DETAIL
N.T.S.

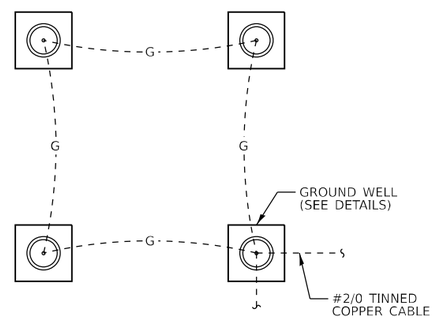

GROUND HALO DETAIL
N.T.S.

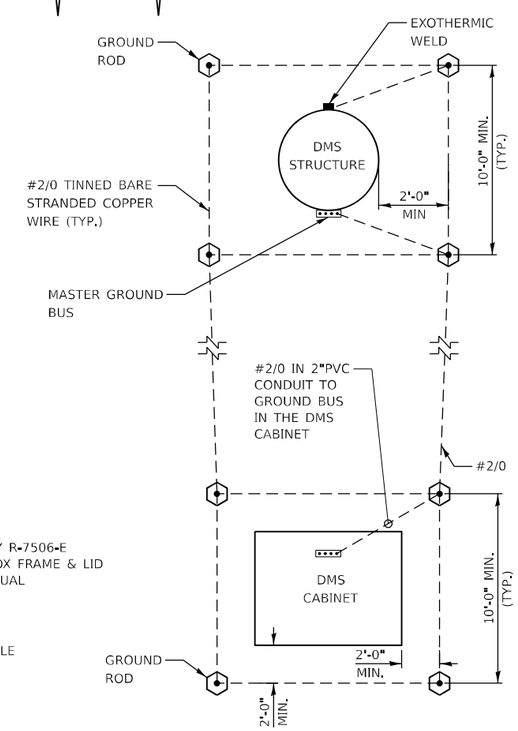

GROUNDING SCHEMATIC
N.T.S.

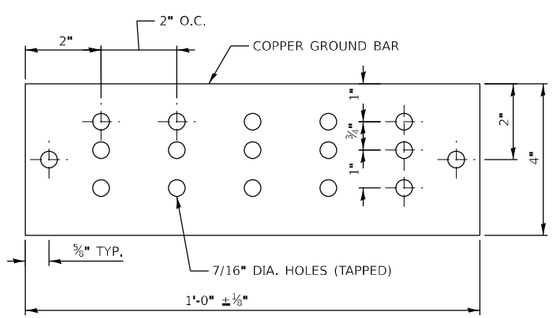

MASTER GROUND BUS BAR SUPPORT SPACING DETAIL
N.T.S.

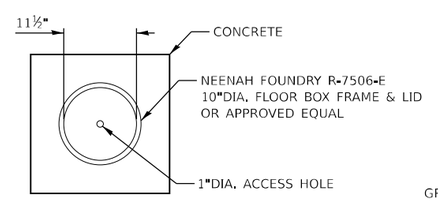

GROUND WELL PLAN DETAIL
N.T.S.

NOTES:

1. GROUNDING SYSTEM SHALL BE PLACED WITHIN IDOT RIGHT-OF-WAY.
2. GROUND MOUNTED CONTROL CABINET SHALL BE PLACED UP STREAM OF THE STRUCTURE AT THE LOCATION SHOWN ON THE PLAN VIEW.
3. INSTALL MARKER TAPE DIRECTLY ABOVE GROUNDING ELECTRODES AND CONDUCTORS.
4. CA-11, A QUALITY, IN ACCORDANCE WITH SSRBC 1004.
5. QUANTITY OF GROUND RODS CONNECTED TO GROUNDING ELECTRODE CONDUCTOR SHALL BE ADJUSTED AS REQUIRED UNTIL RESISTANCE TO GROUND IS 5 OHMS OR LESS. FOR DEVICE AND POWER SERVICE LOCATIONS, IF ADDITIONAL GROUND ROD ELECTRODES ARE REQUIRED IN ORDER TO ACHIEVE REQUIRED RESISTANCE THEY SHALL RADIATE OUT FROM EXISTING GROUND ROD ELECTRODES. THESE SHALL BE CONNECTED WITH #2/0 TINNED BARE STRANDED CONDUCTOR, AND SHALL BE 20' FROM CONNECTED GROUND ROD. ALL COMMUNICATION EQUIPMENT GROUNDING SITES SHALL BE TESTED FOR RESISTANCE TO GROUND USING THE THREE-POINT FALL-OF-POTENTIAL TEST PER ANSI/IEEE STD 81.
6. GROUND RODS SHALL NOT BE ROUTED THROUGH FOUNDATIONS.
7. GROUND RODS SHALL BE INSTALLED IN GROUND WELLS IN FINISHED GRADE.
8. ALL EQUIPMENT GROUNDS SHALL BE PROPERLY CONNECTED TO A CHASSIS: ALL PAINT AND OTHER COATINGS, INCLUDING GALVANIZATION, SHALL BE REMOVED PRIOR TO TERMINATION OF A GROUND. AFTER THE GROUND IS TERMINATED A NON-OXIDIZING COATING SHALL BE PAINTED OVER THE EXPOSED METAL SURFACES.
9. ALL METALLIC MEMBERS OF THE DMS STRUCTURE AND THE DMS SIGN WITHIN 6 FEET OF EACH OTHER SHALL BE BONDED TOGETHER. WELDS SHALL BE CONSIDERED AN ACCEPTABLE BONDING METHOD. U-BOLT CONNECTIONS SHALL NOT BE CONSIDERED AN ACCEPTABLE BONDING METHOD.
10. AT LEAST AN 8 INCH MINIMUM BENDING RADIUS SHALL BE MAINTAINED ON ALL GROUNDING ELECTRODE CONDUCTORS. THE ANGLE OF ANY BENDING SHALL NOT BE LESS THAN 90 DEGREES.
11. GROUNDING CONDUCTORS SHALL ALWAYS ROUTE AS STRAIGHT AS POSSIBLE.
12. THE QUANTITY OF GROUNDING ELECTRODE CONDUCTORS CONNECTED TO A GROUND ROD ELECTRODE SHALL BE LIMITED TO THREE.
13. WHENEVER POSSIBLE, GROUND ROD ELECTRODES SHALL BE INSTALLED NO CLOSER THAN 11' FROM A FOUNDATION.
14. EVERY ELECTRIC CABLE ENTERING OR LEAVING A DMS ENCLOSURE, THE DMS CONTROLLER, OR THE CCTV ELECTRONICS ENCLOSURE SHALL BE PROTECTED WITH A SURGE PROTECTION DEVICE.

ITS-04

MODEL: M4TS4105
FILE NAME: Z:\684087 IDOT IL 56 Smart Corridor\Work\CADD\Plans_AMES\ITS 62N39\D162N39ATS_344.dgn

PARSONS	USER NAME ■ $USER$	DESIGNED - YJ	REVISED -	STATE OF ILLINOIS DEPARTMENT OF TRANSPORTATION	DMS GROUNDING 22ND ST./CERMAK RD.	F.A.P. RTE.	SECTION	COUNTY	TOTAL SHEETS / SHEET NO.
		DRAWN - MT	REVISED -			365	2020-265-SUR, SW & TS	DUPAGE/COOK	492 / 343
	PLOT SCALE ■ $SCALE$	CHECKED - RCB	REVISED -			CONTRACT NO. 62N39			
	PLOT DATE ■ 11/6/2024	DATE - 11-22-2024	REVISED -		SCALE: N.T.S. SHEET 1 OF SHEETS STA. TO STA.	ILLINOIS FED. AID PROJECT			

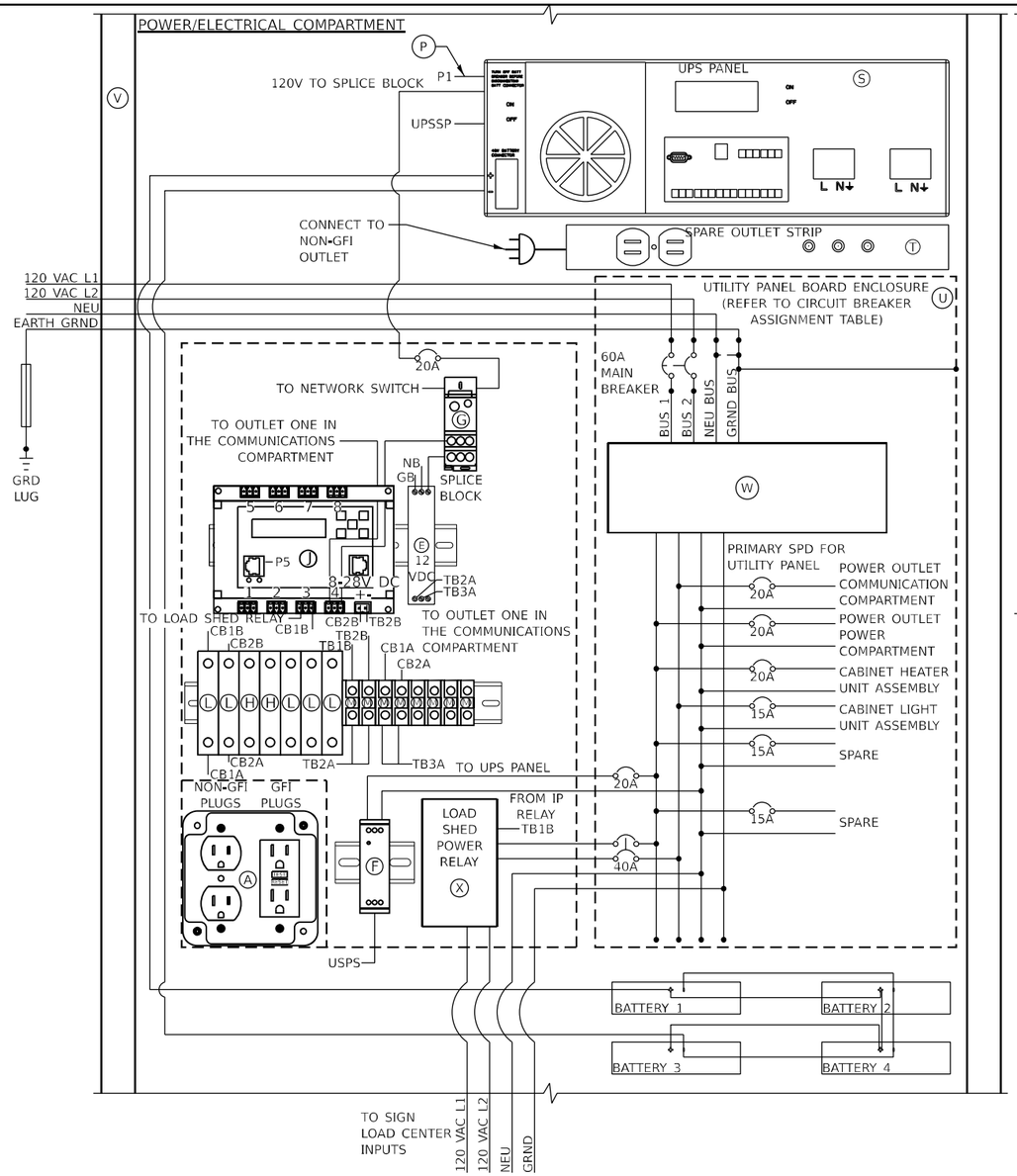

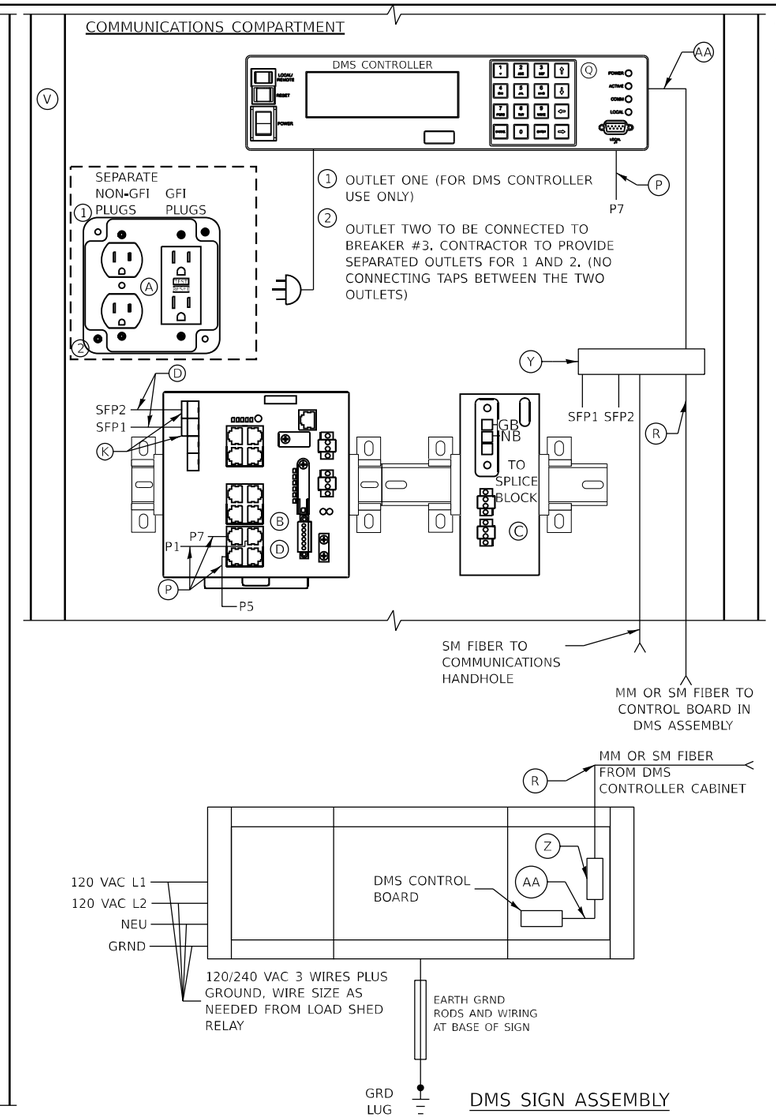

DMS SIGN ASSEMBLY

LEGEND:

ITEM	DESCRIPTION
A	TWO DUPLEX 120V RECEPTACLES, ONE GFCI (HUBBELL GFR5362TR) AND ONE STANDARD (HUBBELL BR20WR)
B	NETWORK SWITCH CISCO IE-4000-8T4G-E
C	NETWORK SWITCH POWER SUPPLY, PWR-IE170W-PC-AC=
D	2 METER - SMFO LC-SC DUPLEX JUMPERS, CORNING/047202R5120002M
E	AC/DC POWER SUPPLY, 12VDC, 10 WATTS, MEAN WELL/MDR-10-12
F	120VAC SURGE SUPPRESSOR, MOUNTED ON DIN RAIL COOPER CROUSE HINDS/MA15/D/1/SI OR APPROVED EQUAL
G	SPLICE BLOCK, ALTECH/38041
H	5A CIRCUIT BREAKER, ALLEN BRADLEY/1492-SPM1B050
J	POWER CONTROLLER, 8-CHANNEL DIN ETHERNET RELAY DIGITAL LOGGERS/DIN 4
K	(2) GLC-LX-SM-RGD = 1 GBPS SM SFP MODULES
L	2A CIRCUIT BREAKER, ALLEN BRADLEY/1492-SPM1B020
M	TERMINAL BLOCK, ALLEN BRADLEY/1492-CD8
P	INDOOR/OUTDOOR RATED CAT6 (1000MBS, TEMPERATURE HARDENED) THESE ARE THE CAT6 CABLES ROUTED INSIDE CABINET
Q	DMS CONTROLLER
R	12-STRAND MULTI-MODE OR SINGLE-MODE FIBER OPTIC CABLE
S	UPS PANEL ALPHA TECHNOLOGIES FXM1100 WITH BATTERIES
T	OUTLET STRIP
U	DMS MANUFACTURER UTILITY PANEL ENCLOSURE
V	DMS CONTROL CABINET TYPE 334 NEMA 4X
W	120/240VAC MTL ZONE DEFENDER MODEL ZD16100
X	LOAD SHED POWER RELAY MAGNECRAFT MODEL 199X-12 WITH COVER
Y	RACK MOUNTED FIBER PATCH PANEL
Z	STAND ALONE FIBER PATCH PANEL
AA	2 METER FIBER JUMPER, CORNING (TYPE AND CONNECTION PER DMS MANUFACTURER)

NOTES:

1. FABRICATOR TO PROVIDE CABINET DRAWINGS SUBMITTAL FOR REVIEW AND APPROVAL PRIOR TO FABRICATION.
2. ENTIRE COMPLETED SYSTEM SHALL BE GROUNDED AND BONDED IN ACCORDANCE WITH MOTOROLA R56 MANUAL AND THE APPLICABLE ARTICLES OF SECTION 250 OF THE NATIONAL ELECTRICAL CODE.
3. DMS CONTROLLER SHOWN REPRESENTS A GENERIC DMS CONTROLLER. DMS CONTROLLERS ARE SUPPLIED BY THE DMS MANUFACTURER AND THEREFORE THE FRONT PANEL MAY DIFFER.
4. REFERENCED PRODUCT MODELS MAY BE SUBSTITUTED WITH APPROVED EQUIVALENTS THAT ARE FULLY INTEROPERABLE WITH ALL DMS SYSTEM COMPONENTS.

CIRCUIT BREAKER ASSIGNMENT TABLE
(SEE UTILITY PANEL BOARD CIRCUIT BREAKER LOCATIONS)

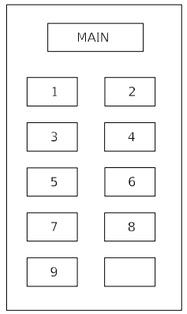

CIRCUIT BREAKER DESCRIPTION	AMPS	CIRCUIT BREAKER LOCATION
POWER OUTLET POWER COMPARTMENT	20	1
CABINET HEATER UNIT ASSEMBLY	20	2
POWER OUTLET COMMUNICATION COMPARTMENT	20	3
CABINET LIGHT UNIT ASSEMBLY	15	4
LOAD SHED RELAY	40	5
		7
UPS PANEL	20	6
NOT USED	15	8
NOT USED	15	9

ITS-05

MODEL: MHTS-v1108
FILE NAME: Z:\684087 IDOT IL 56 Smart Corridor\Work\CADD\From_AMES\ITS 62N39\D162N39-ITS_345.dgn

PARSONS

USER NAME = $USER$	DESIGNED - YJ	REVISED -
	DRAWN - MT	REVISED -
PLOT SCALE = $SCALE$	CHECKED - RCB	REVISED -
PLOT DATE = 11/6/2024	DATE - 11-22-2024	REVISED -

STATE OF ILLINOIS
DEPARTMENT OF TRANSPORTATION

DMS CABINET COMMUNICATIONS/FOUNDATION (1 OF 2)
22ND ST./CERMAK RD.

SCALE: N.T.S. | SHEET 1 OF SHEETS | STA. TO STA.

F.A.P. RTE.	SECTION	COUNTY	TOTAL SHEETS	SHEET NO.
365	2020-265-SUR, SW & TS	DUPAGE/COOK	492	344

CONTRACT NO. 62N39
ILLINOIS | FED. AID PROJECT

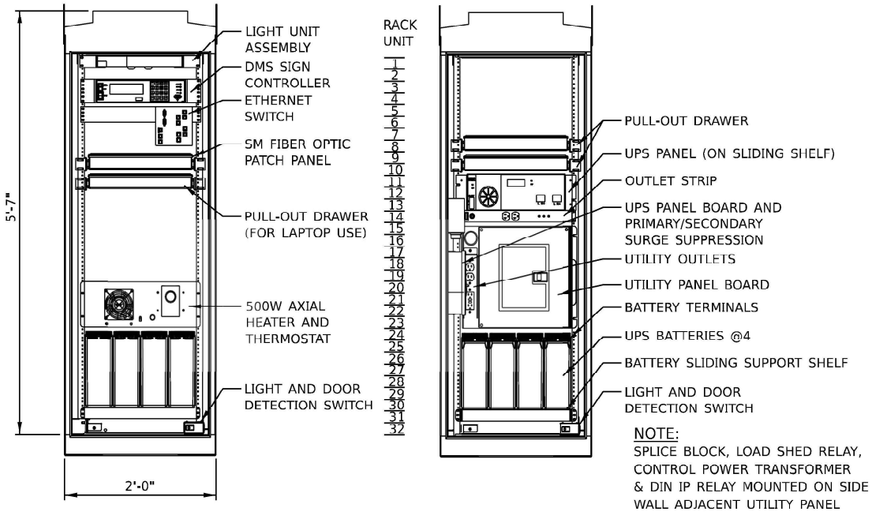

NOTE:
SPLICE BLOCK, LOAD SHED RELAY, CONTROL POWER TRANSFORMER & DIN IP RELAY MOUNTED ON SIDE WALL ADJACENT UTILITY PANEL BOARD.

SECTION B-B FRONT VIEW
(NO DOOR SHOWN)

SECTION A-A REAR VIEW
(NO DOOR SHOWN)

TYPE 334 DMS CABINET LAYOUT DETAILS

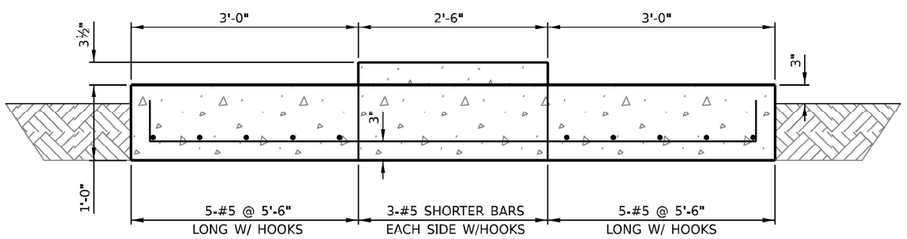

SECTION E-E

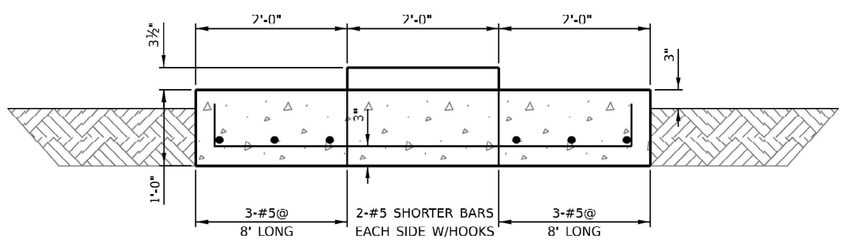

SECTION D-D
NOT TO SCALE

DMS CONTROL CABINET FOUNDATION DETAILS

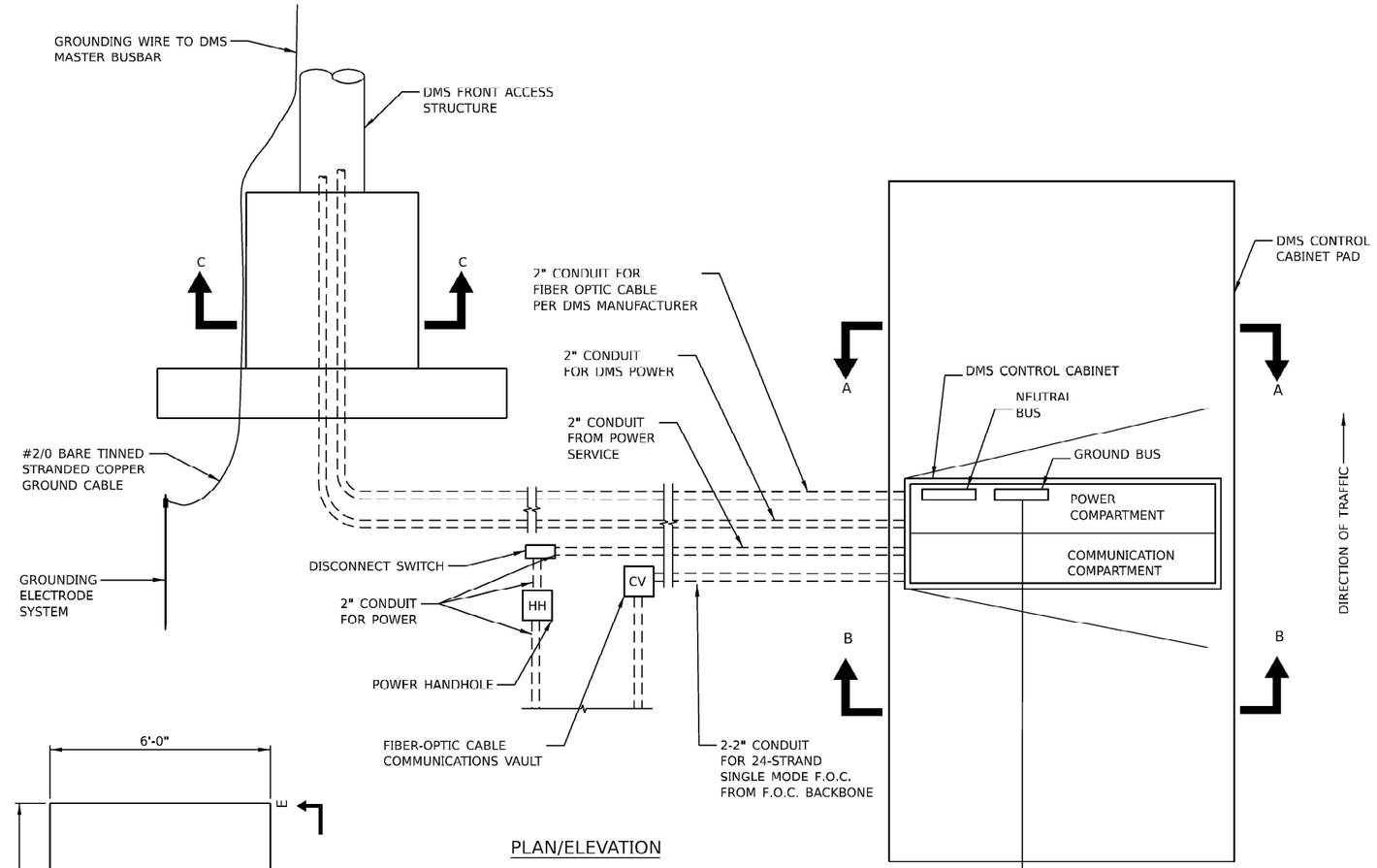

PLAN/ELEVATION

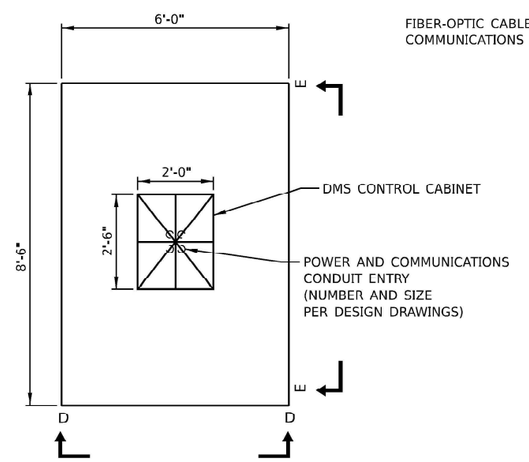

PLAN

DMS CABINET NOTES:

1. PAD MOUNT CONFIGURATION
2. 0.125" ALUMINUM 5052-H34 CONSTRUCTION WITH CONTINUOUSLY WELDED EXTERNAL SEAMS
3. THREE POINT LATCH WITH SST HANDLE
4. DOUBLE FLANGED DOOR SEAL WITH 1#2" X 2" CLOSED CELL NEOPRENE GASKET WITH CORBIN #2 LOCK ON EACH DOOR.
5. FULL LENGTH EIA GAGE FOR 19" EQUIPMENT
6. ADJUSTABLE PULL OUT DRAWER
7. DOOR OPENING: 21.50" X 54.75"
8. FULL LENGTH STAINLESS STEEL HINGE
9. ALL STAINLESS STEEL HARDWARE
10. CORBIN #2 LOCK
11. NEMA 4X ENCLOSURE
12. SHIPPED ON WOOD PALLET
13. MOUNT LAYER 2 ETHERNET SWITCH (DIN-RAIL MOUNT) USING DIN-RAIL MOUNT
14. BATTERIES AND UPS SHALL BE PLACED ON A SLIDING SHELF
15. CABINET DIMENSION 24"X30"X67"

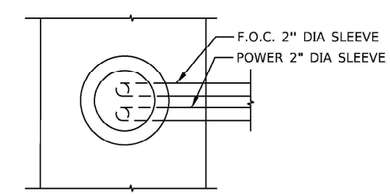

SECTION C-C
POWER AND F.O.C WITHIN DMS FOUNDATION

DMS CABINET FOUNDATION NOTES:

1. COORDINATE SIZE OF OPENING WITH DMS CONTROLLER CABINET BOTTOM CONDUIT CUT-OUTS
2. CONCRETE = 4,000 PSI (MIN.)
3. REBAR EPOXY COATED FY=60,000 PSI (MIN.)
4. PROVIDE SHOP DRAWINGS PRIOR TO CONSTRUCTION
5. INCLUDE CONDUITS

ITS–06

MODEL: MITS-1107
FILE NAME: Z:\894-087 IDOT IL 65 Smart Corridor\Work\CADD\From_AMES\ITS 62N39\D162N39-ITS_346.dgn

PARSONS	USER NAME = $USER$	DESIGNED - YJ	REVISED -	STATE OF ILLINOIS DEPARTMENT OF TRANSPORTATION	DMS CABINET COMMUNICATIONS/FOUNDATION (2 OF 2) 22ND ST./CERMAK RD.	F.A.P. RTE.	SECTION	COUNTY	TOTAL SHEETS	SHEET NO.
		DRAWN - MT	REVISED -			365	2020-265-SUR, SW & TS	DUPAGE/COOK	492	345
	PLOT SCALE = $SCALE$	CHECKED - RCB	REVISED -					CONTRACT NO. 62N39		
	PLOT DATE = 11/6/2024	DATE - 11-22-2024	REVISED -		SCALE: N.T.S. SHEET 1 OF SHEETS STA. TO STA.		ILLINOIS	FED. AID PROJECT		

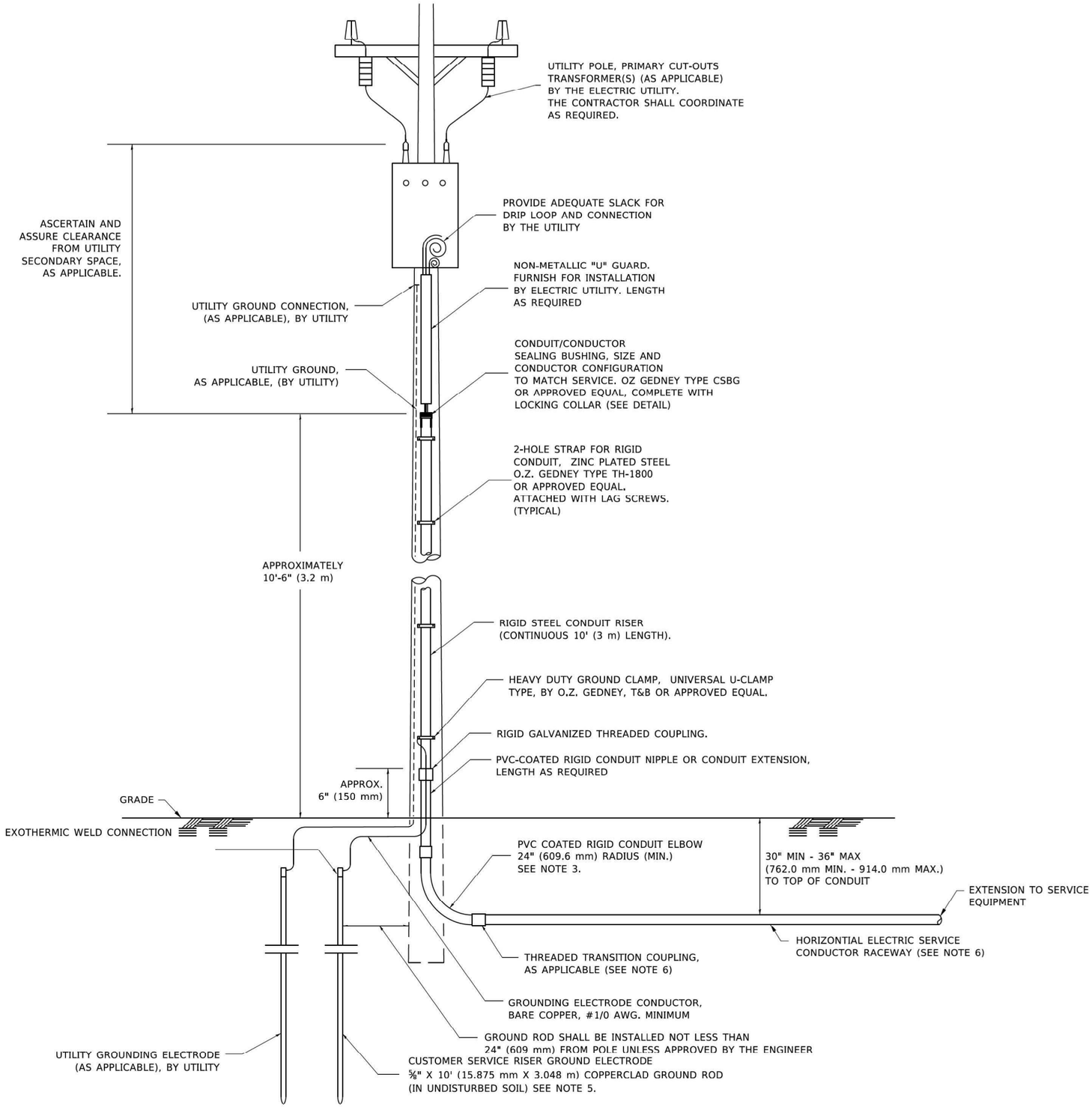

APPLICATION

THIS DETAIL APPLIES FOR LOW VOLTAGE ELECTRIC SERVICE (660 V OR LESS) FROM AN OVERHEAD UTILITY SUPPLY TO SEPERATLY-MOUNTED SERVICE EQUIPMENT.

NOTES

1. SERVICE VOLTAGE SHALL BE AS INDICATED ELSEWHERE IN THE DRAWINGS.
2. UNLESS OTHERWISE INDICATED, ITEMS AND WORK SHALL BE INCLUDED AND PAID AS PART OF THE ELECTRIC UTILITY SERVICE INSTALLATION PAY ITEM.
3. CONDUIT AND CONNECTOR DIAMETER SHALL MATCH THE DIAMETER OF THE SERVICE CONDUCTOR RACEWAY AS INDICATED ON THE PLANS.
4. PVC COATED RACEWAYS AND ACCESSORIES SHALL BE CAREFULLY INSTALLED WITH MFR RECOMMENDED TOOLS AND PROCEDURES TO AVOID DAMAGE. ANY DAMAGE SHALL BE REPAIRED WITH COMPATIBLE PVC TOUCH-UP MATERIAL TO THE SATISFACTION OF THE ENGINEER OR THE DAMAGED MATERIAL SHALL BE REPLACED AT NO ADDITIONAL COST.
5. THE CONTRACTOR SHALL OBTAIN INSPECTION AND APPROVAL BY THE ENGINEER OF SERVICE RISER GROUND ELECTRODE, RISER ELBOW, NIPPLE AND CONNECTION TO SERVICE CONDUCTOR RACEWAY EXTENSION BEFORE BACKFILL AND SHALL ALSO OBTAIN INSPECTION OF SERVICE RISER AND SEALING BUSHING BEFORE UTILITY "U" GUARD INSTALLATION AND SERVICE CONNECTION.
6. THE HORIZONTAL ELECTRIC SERVICE CONDUCTOR RACEWAY SHALL BE AS INDICATED AND SHALL BE MEASURED SEPARATELY FOR PAYMENT. WHEN THE RACEWAY IS PVC-COATED RIGID GALVANIZED STEEL, THE COUPLING SHALL BE THE SAME. WHEN THE RACEWAY IS PVC CONDUIT (IN CONCRETE), THE COUPLING SHALL BE A METALIC TO NON METALIC ADAPTER. WHEN THE RACEWAY IS ENCASED IN CONCRETE, THE CONCRETE SHALL EXTEND TO COVER THE COUPLING.
7. PLANS AND DETAILS INDICATE THE GENERAL NATURE AND REQUIREMENTS. THEY DO NOT SHOW EVERY ACCESSORY AND ATTACHMENT, AND THEY DO NOT RELIEVE THE CONTRACTOR OF THE REQUIREMENTS OF THE SPECIFICATIONS AND SPECIAL PROVISIONS TO ASCERTAIN UTILITY REQUIREMENTS AND TO COORDINATE ACCORDINGLY, FURNISHING ALL ITEMS AND WORK NOT PROVIDED BY THE UTILITY, BUT NECESSARY FOR A COMPLETE SERVICE INSTALLATION IS REQUIRED AND SHALL BE INCLUDED IN THE ELECTRIC UTILITY SERVICE INSTALLATION PAY ITEM.

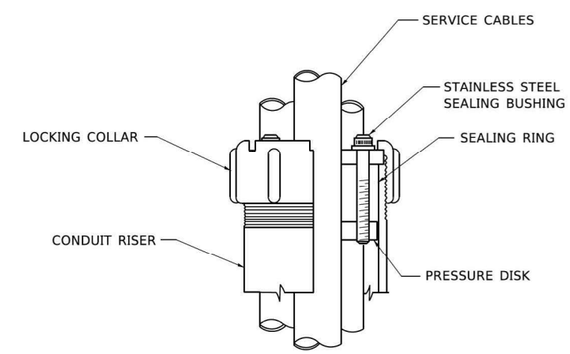

SEALING BUSHING DETAIL

ITS–07

MODEL: Default
FILE NAME: Z:\684087 DOT IL 55 Smart Corridor\Work\CADD\From_AMES\ITS 62N39D1\62N39ITS_347.dgn

PARSONS	USER NAME = $USER$	DESIGNED - YJ	REVISED -	STATE OF ILLINOIS DEPARTMENT OF TRANSPORTATION	DMS ELECTRIC SERVICE 22ND ST./CERMAK RD.	F.A.P. RTE.	SECTION	COUNTY	TOTAL SHEETS / SHEET NO.
		DRAWN - MT	REVISED -			365	2020-265-SUR, SW & TS	DUPAGE/COOK	492 / 346
	PLOT SCALE = $SCALE$	CHECKED - RCB	REVISED -			CONTRACT NO. 62N39			
	PLOT DATE = 11/6/2024	DATE - 11-22-2024	REVISED -		SCALE: N.T.S. SHEET 1 OF 1 SHEETS STA. TO STA.	ILLINOIS	FED. AID PROJECT		

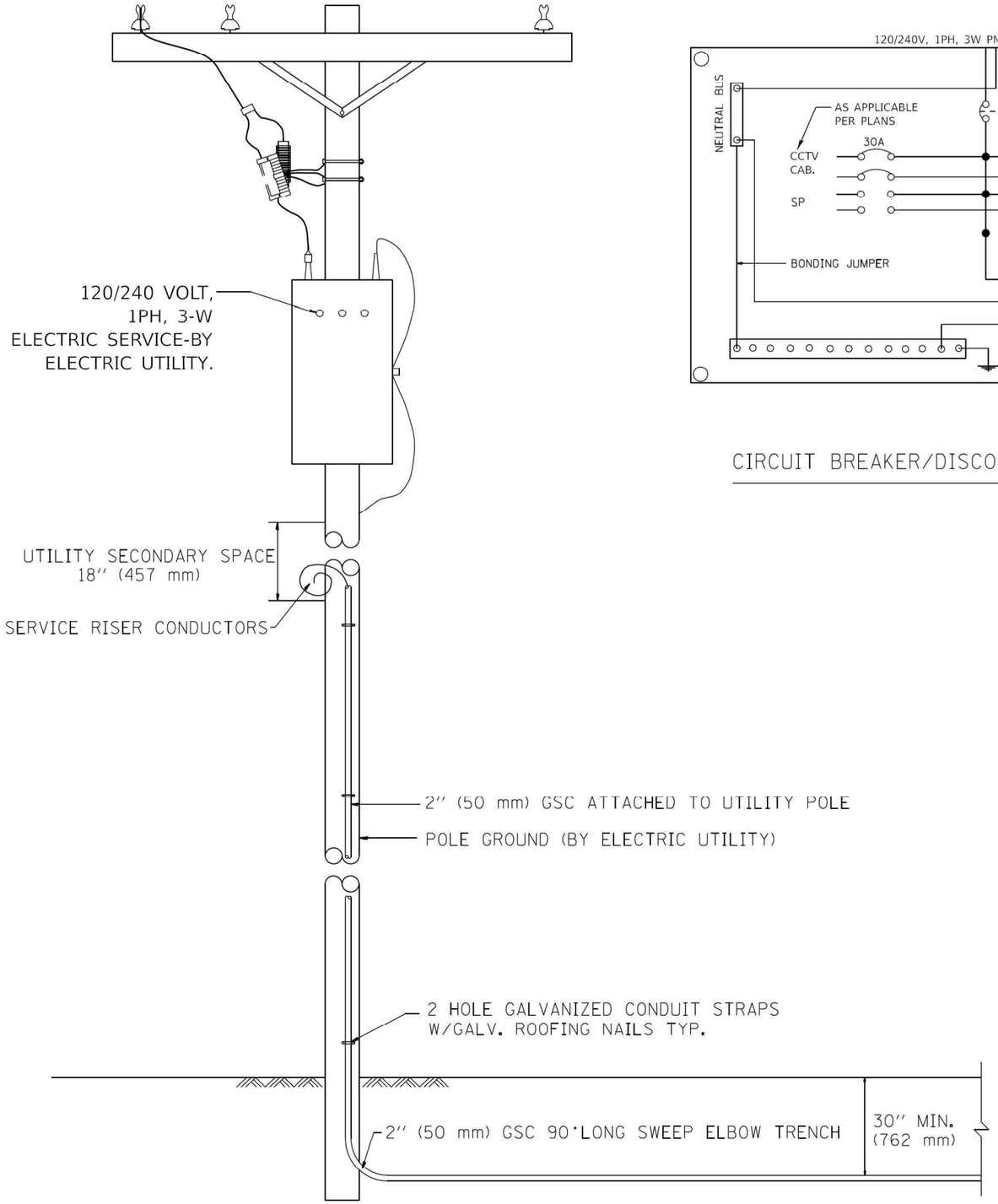

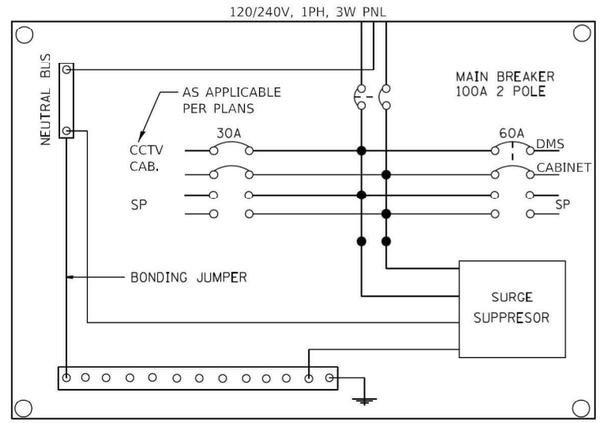

CIRCUIT BREAKER/DISCONNECT DETAIL

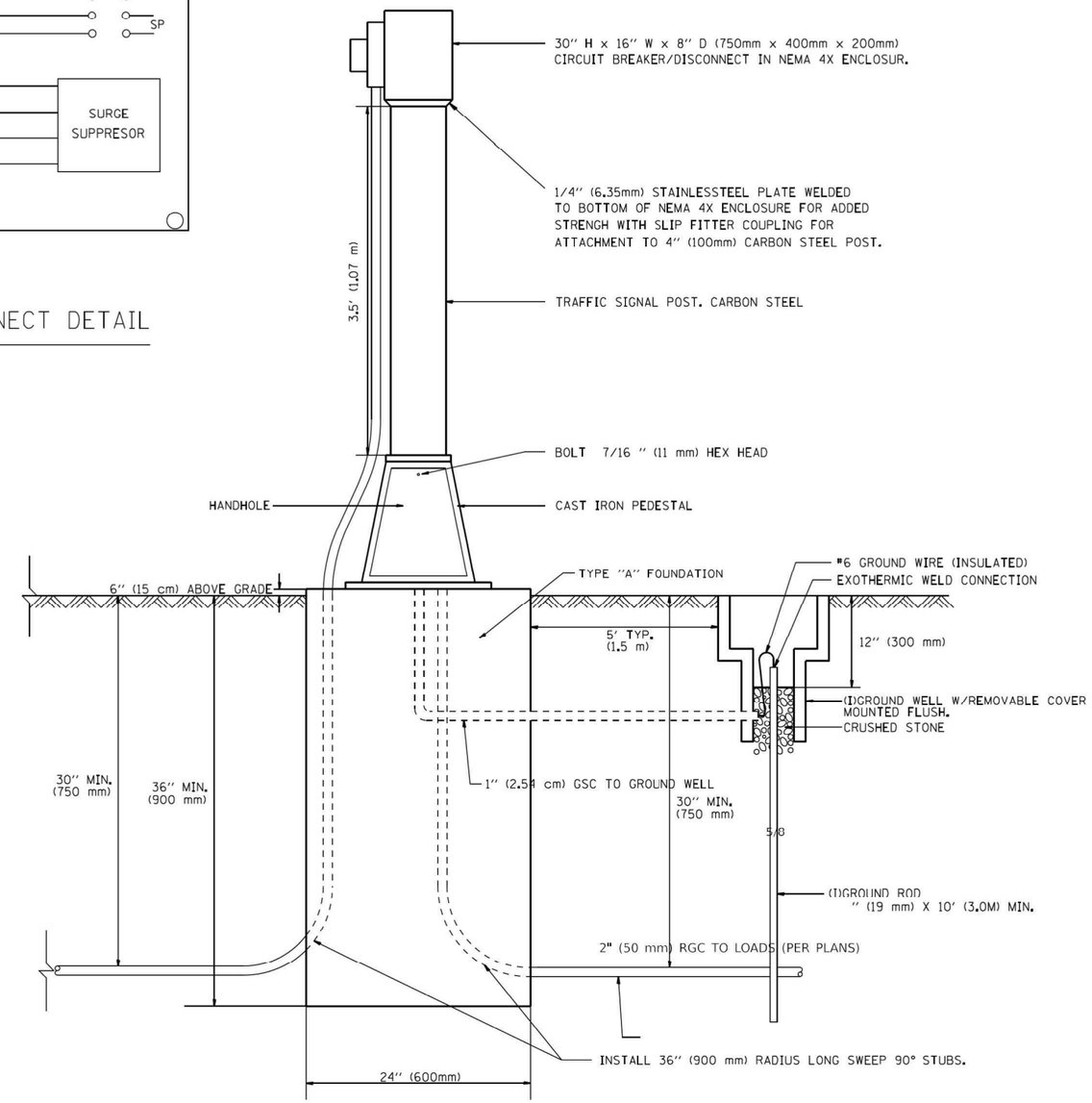

ITS–08

MODEL: Default
FILE NAME: Z:\684087 DOT IL 53 Smart Corridor\Work\CADD\From_AMES\ITS 62N39D1\62N39ITS_348.dgn

PARSONS	USER NAME = $USER$	DESIGNED - YJ	REVISED -	STATE OF ILLINOIS DEPARTMENT OF TRANSPORTATION	DMS ELECTRIC METER 22ND ST./CERMAK RD.	F.A.P. RTE.	SECTION	COUNTY	TOTAL SHEETS / SHEET NO.
		DRAWN - MT	REVISED -			365	2020-265-SUR, SW & TS	DUPAGE/COOK	492 / 347
	PLOT SCALE = $SCALE$	CHECKED - RCB	REVISED -			CONTRACT NO. 62N39			
	PLOT DATE = 11/6/2024	DATE - 11-22-2024	REVISED -		SCALE: N.T.S. SHEET 1 OF 1 SHEETS STA. TO STA.	ILLINOIS	FED. AID PROJECT		

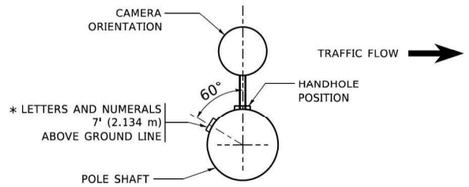

POSITION OF HANDHOLE AND CAMERA NUMBER FOR POLE MOUNTED ON BRIDGE PARAPET OR BARRIER WALL

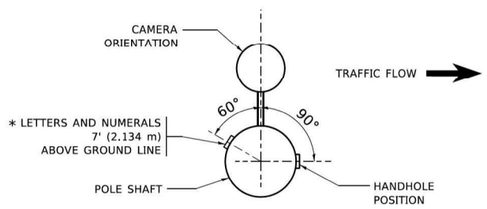

POSITION OF HANDHOLE AND CAMERA NUMBER

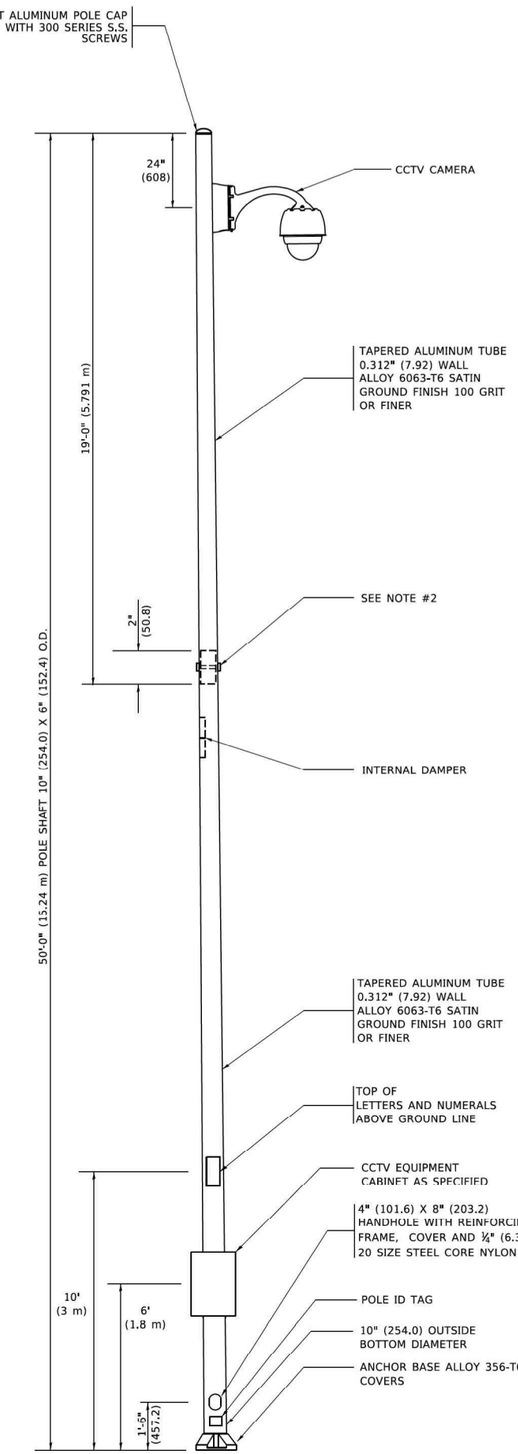

NOTES:

1. ALL DIMENSIONS ARE IN INCHES (MILLIMETERS) UNLESS OTHERWISE SHOWN.
2. TWO PIECE SHAFT WILL BE MATCHED MARKED AND INTERCHANGEABLE BETWEEN DIFFERENT UNITS. FIELD DRILLING OF THE HOLES WILL NOT BE ALLOWED.
3. THE POLE WILL MEET AASHTO DESIGN CRITERIA AS SPECIFIED.
4. THE INSTALLING CONTRACTOR WILL PROVIDE A UL LISTED GROUNDING CONNECTOR. BURNDY K2C23, T&B SP4DL OR APPROVED EQUAL.
5. POLES WILL BE INSTALLED IN ACCORDANCE TO MANUFACTURER'S INSTRUCTIONS.
6. POLES WILL BE SET PLUMB ON THE FOUNDATION WITHOUT THE USE OF LEVELING NUTS, WASHERS OR SHIMS.

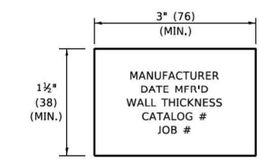

POLE ID TAG

NTS

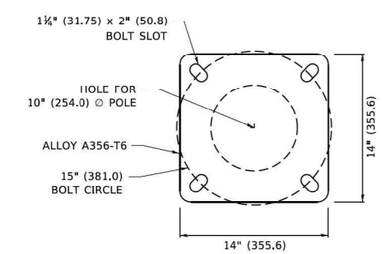

POLE BASE PLATE DETAIL

15 INCH (381.0) BOLT CIRCLE

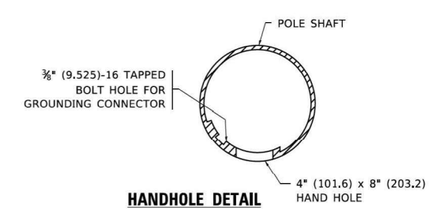

HANDHOLE DETAIL

(N.T.S.)

ITS–09

MODEL: Default
FILE NAME: Z:\884087 DOT IL 59 Smart Corridor\Work\CADD\From_AMES\ITS 62N39\D162N39-ITS_349.dgn

PARSONS	USER NAME = $USER$	DESIGNED - YJ	REVISED -	STATE OF ILLINOIS DEPARTMENT OF TRANSPORTATION	CCTV CAMERA POLE 22ND ST./CERMAK RD.	F.A.P. RTE.	SECTION	COUNTY	TOTAL SHEETS / SHEET NO.
		DRAWN - MT	REVISED -			365	2020-265-SUR, SW & TS	DUPAGE/COOK	492 / 348
	PLOT SCALE = $SCALE$	CHECKED - RCB	REVISED -					CONTRACT NO. 62N39	
	PLOT DATE = 11/6/2024	DATE - 11-22-2024	REVISED -		SCALE: 1"=20' SHEET 1 OF 1 SHEETS STA. TO STA.			ILLINOIS FED. AID PROJECT	

CCTV CAMERA POLE FOUNDATION DEPTH TABLE

SOIL CONDITIONS	DESIGN DEPTH "D" OF FOUNDATION
SOFT CLAY Qu = 0.375 TON/SQ. FT.	13'-0" (3.96 m)
MEDIUM CLAY Qu = 0.75 TON/SQ.FT	9'-6" (2.09 m)
STIFF CLAY Qu = 1.50 TON/SQ. FT.	7'-0" (2.13 m)
LOOSE SAND } = 34°	9'-0" (2.74 m)
MEDIUM SAND } = 37.5°	8'-3" (2.52 m)
DENSE SAND } = 40°	7'-9" (2.36 m)

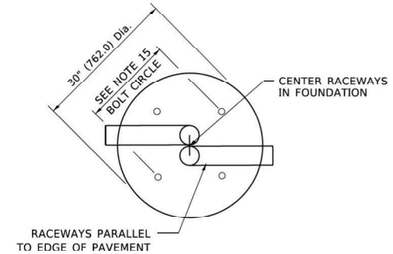

TOP VIEW

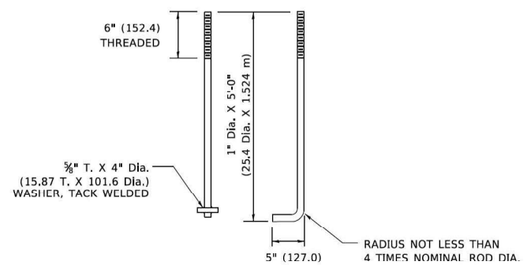

ANCHOR ROD DETAIL

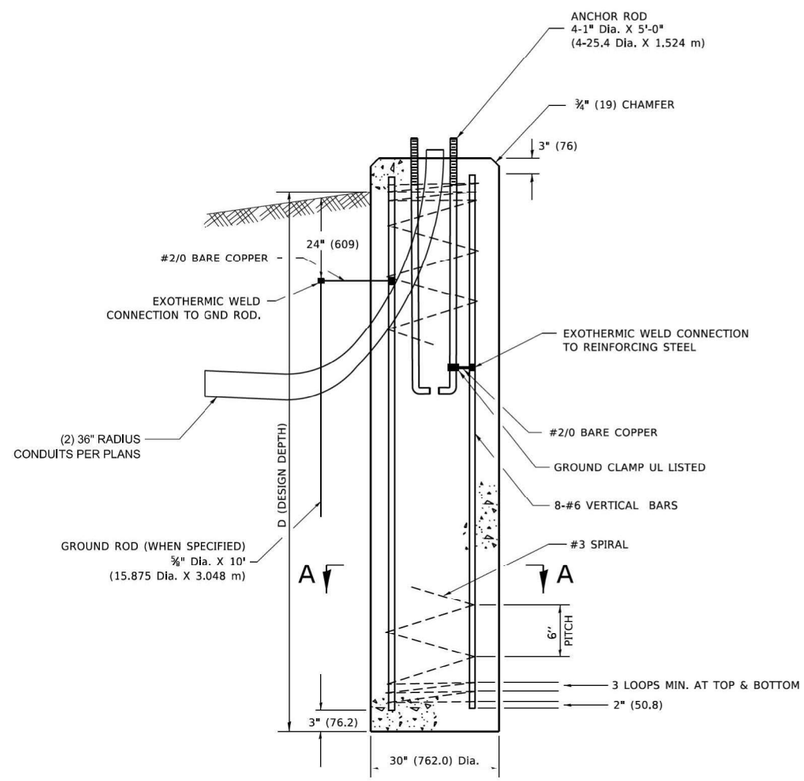

FOUNDATION DETAIL

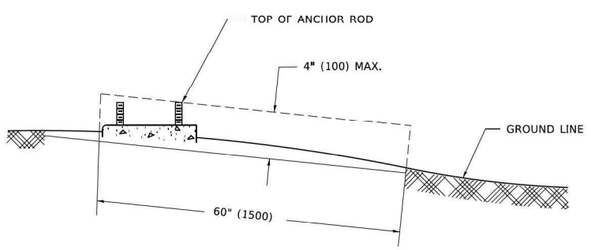

FOUNDATION EXTENSION DETAIL

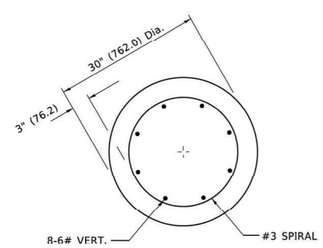

SECTION A–A

NOTES:

1. ALL DIMENSIONS ARE IN INCHES (MILLIMETERS) UNLESS OTHERWISE SHOWN.
2. THE ANCHOR RODS AND RACEWAYS SHALL BE PROPERLY SECURED IN PLACE BEFORE THE CONCRETE IN PLACED.
3. THE FOUNDATION SHALL NOT PROTRUDE MORE THAN 100MM (4 IN.) ABOVE THE FINISHED GRADE WITHIN A 60 IN. (1.5 m) CHORD ACROSS THE FOUNDATION, WITH ANCHOR RODS INCLUDED, IN ACCORDANCE WITH AASHTO GUIDELINES. IF THE FOUNDATION HEIGHT, INCLUDING ANCHOR RODS, EXTENDS BEYOND THESE SPECIFIED LIMITS, THE FOUNDATION SHALL BE REPLACED AT THE CONTRACTOR'S EXPENSE. SEE FOUNDATION EXTENSION DETAIL.
4. THE HOLE FOR THE FOUNDATION SHALL BE MADE BY DRILLING WITH AN AUGER, OF THE SAME DIAMETER AS THE FOUNDATION. IF SOIL CONDITIONS REQUIRE THE USE OF A LINER TO FORM THE HOLE, THE LINER SHALL BE WITHDRAWN AS THE CONCRETE IS DEPOSITED.
5. THE TOP OF THE FOUNDATION SHALL BE CONSTRUCTED LEVEL. A LINER OR FORM SHALL BE USED TO PRODUCE A UNIFORM SMOOTH SIDE TO THE TOP OF THE FOUNDATION. FOUNDATION TOP SHALL BE CHAMFERED ¾-IN. (20 mm).
6. THE CONCRETE SHALL BE CLASS SI. CONCRETE SHALL CURE ACCORDING TO ARTICLE 1020.13 BEFORE LIGHT POLES ARE INSTALLED.
7. THE ANCHOR ROD SHALL BE A HOOK ROD TYPE. COLD BENDING OF THE ANCHOR ROD WILL NOT BE ALLOWED. THE RADIUS OF THE HOOK BEND SHALL NOT BE LESS THAN 4 TIMES THE NOMINAL DIAMETER OF THE ANCHOR ROD. A TACK WELDED ANCHOR ROD MAY BE SUBSTITUTED WITH THE APPROVAL OF THE ENGINEER.
8. THE ANCHOR RODS SHALL BE ACCORDING TO ASTM F1554 GRADE 725 (GRADE 105). NUTS SHALL BE HEXAGON NUTS ACCORDING TO ASTM A 194 2H OR ASTM A 563 DH, AND WASHERS SHALL BE ACCORDING TO ASTM F 436.
9. ANCHOR RODS, NUTS AND WASHERS SHALL BE COMPLETELY GALVANIZED BY EITHER THE HOT-DIPPED PROCESS CONFORMING WITH AASHTO M 232, THE MECHANICAL PLATING METHOD CONFORMING TO AASHTO M 298, CLASS 50 WITH A MAXIMUM COATING THICKNESS OF 150 UM(6 MILS) OR THE ELECTROLYTIC PROCESS ACCORDING TO ASTM F 1136.
10. THE ANCHOR RODS SHALL BE THREADED A MINIMUM OF 6 INCHES (150 mm) WITH A MINIMUM OF 3 INCHES (75 mm) OF THREADED ANCHOR ROD EMBEDDED IN THE FOUNDATION.
11. ANCHOR RODS SHALL PROJECT 2¾" (69.9 mm) ABOVE THE TOP OF THE FOUNDATION. IF BREAKAWAY COUPLINGS ARE SPECIFIED, THE CONTRACTOR SHALL CAREFULLY COORDINATE THE ANCHOR ROD PROJECTION WITH THE INSTALLATION REQUIREMENTS OF THE BREAKAWAY COUPLINGS.
12. THE CONTRACTOR SHALL USE A #3 SPIRAL AT 6" (152.4 mm) PITCH OR MAY SUBSTITUTE #3 TIES AT 12" (304.8 mm) O.C. WITH THE APPROVAL OF THE ENGINEER.
13. THE CABLE TRENCHES AND FOUNDATION SHALL BE BACK FILLED AND COMPACTED AS SPECIFIED BEFORE THE LIGHT POLE IS ERECTED.
14. THE RACEWAYS SHALL PROJECT 1" (25.4 mm) ABOVE THE TOP OF THE FOUNDATION.
15. ANCHOR ROD BOLT CIRCLE TO BE COORDINATED WITH CAMERA STRUCTURE

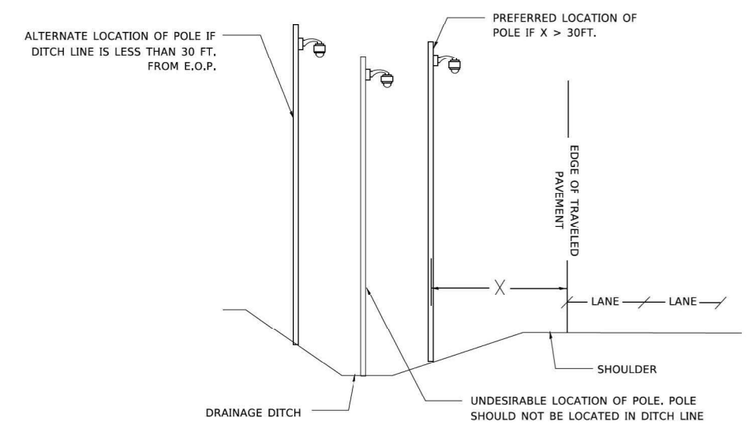

CAMERA POLE PLACEMENT

ITS–10

MODEL: Default
FILE NAME: 2484087 DOT IL 53 Smart Corridor\Work\CADD\From_AMES\ITS 62N39D1\62N39-ITS_350.dgn

PARSONS

USER NAME = $USER$	DESIGNED - YJ	REVISED -	
	DRAWN - MT	REVISED -	
PLOT SCALE = $SCALE$	CHECKED - RCB	REVISED -	
PLOT DATE = 11/6/2024	DATE - 11-22-2024	REVISED -	

STATE OF ILLINOIS
DEPARTMENT OF TRANSPORTATION

CCTV CAMERA POLE FOUNDATION
22ND ST./CERMAK RD.

SCALE: 1"=20' | SHEET 1 OF 1 SHEETS | STA. TO STA.

F.A.P. RTE.	SECTION	COUNTY	TOTAL SHEETS	SHEET NO.
365	2020-265-SUR, SW & TS	DUPAGE/COOK	492	349

CONTRACT NO. 62N39

ILLINOIS | FED. AID PROJECT

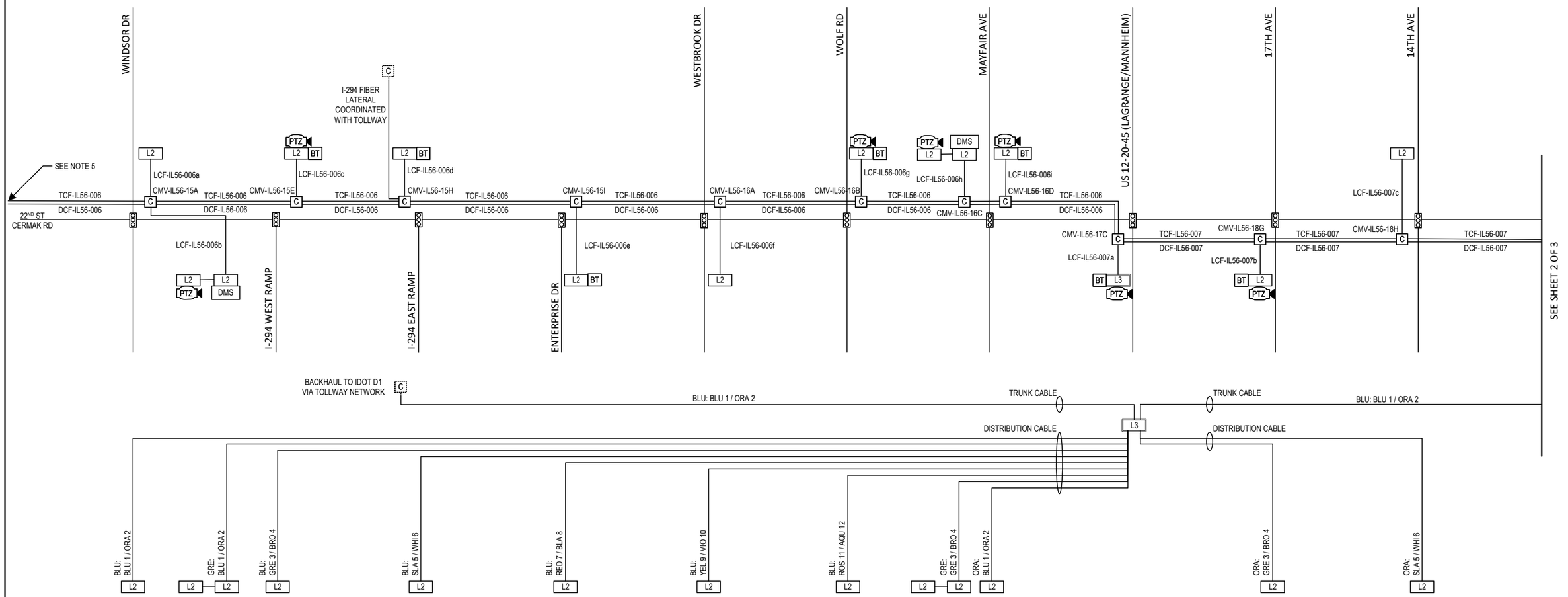

LEGEND

PROPOSED

——	FIBER OPTIC CABLE (FOC)
C	COMMUNICATIONS VAULT
L2	LAYER 2 NETWORK SWITCH IN CABINET
L3	LAYER 3 NETWORK SWITCH IN CABINET
DMS	DYNAMIC MESSAGE SIGN
PTZ	CCTV CAMERA, PAN-TILT-ZOOM
BT	BLUETOOTH DETECTOR
	TRAFFIC SIGNAL

NOTES:

1. NOT ALL COMMUNICATIONS VAULTS AND FIBER STRANDS ARE DEPICTED IN THIS OVERVIEW DIAGRAM. SEE COMMUNICATIONS SINGLE LINE AND FIBER SPLICING DIAGRAMS AND INTERCONNECT SHEETS FOR MORE INFORMATION.
2. COMMUNICATIONS VAULTS WITH LATERAL CABLE-FIBER (LCF) REQUIRE FUSION SPLICING FIBER STRANDS BETWEEN THE LCF AND DISTRIBUTION CABLE-FIBER (DCF).
3. TRUNK CABLE-FIBER (TCF) SHALL PASS THROUGH AND SHALL NOT BE CUT IN COMMUNICATIONS VAULTS EXCEPT WHERE A LAYER 3 NETWORK SWITCH IS LOCATED.
4. LABELS IN FIBER ASSIGNMENT OVERVIEW SCHEMATIC INDICATE FIBER TUBE AND FIBER STRANDS OF CABLE (TUBE: STRAND/STRAND) USING FIRST THREE CHARACTERS OF TIA-598 STANDARD COLORS.
5. IN EXISTING COMMUNICATIONS VAULT AT YORK RD INTERSECTION, SPLICE UNUSED STRANDS IN EXISTING TRUNK CABLE AND EXISTING DISTRIBUTION CABLE WITH PROPOSED CABLES TCF-IL56-006 AND DCF-IL56-006, RESPECTIVELY (END-TO-END).

ITS-11

PARSONS

DESIGNED - YJ	REVISED -	
DRAWN - MT	REVISED -	
CHECKED - RCB/KA	REVISED -	
DATE - 11-22-2024	REVISED -	

STATE OF ILLINOIS
DEPARTMENT OF TRANSPORTATION

OVERALL SYSTEM COMMUNICATIONS DIAGRAM (1 OF 3)
22ND ST. / CERMAK RD.

N.T.S. | SHEET OF SHEETS | STA. TO STA.

F.A.P. RTE.	SECTION	COUNTY	TOTAL SHEETS	SHEET NO.
365	20-265-SUR, SW & TS	DUPAGE/COOK	492	350
		CONTRACT NO. 62N39		
		ILLINOIS	FED. AID PROJECT	

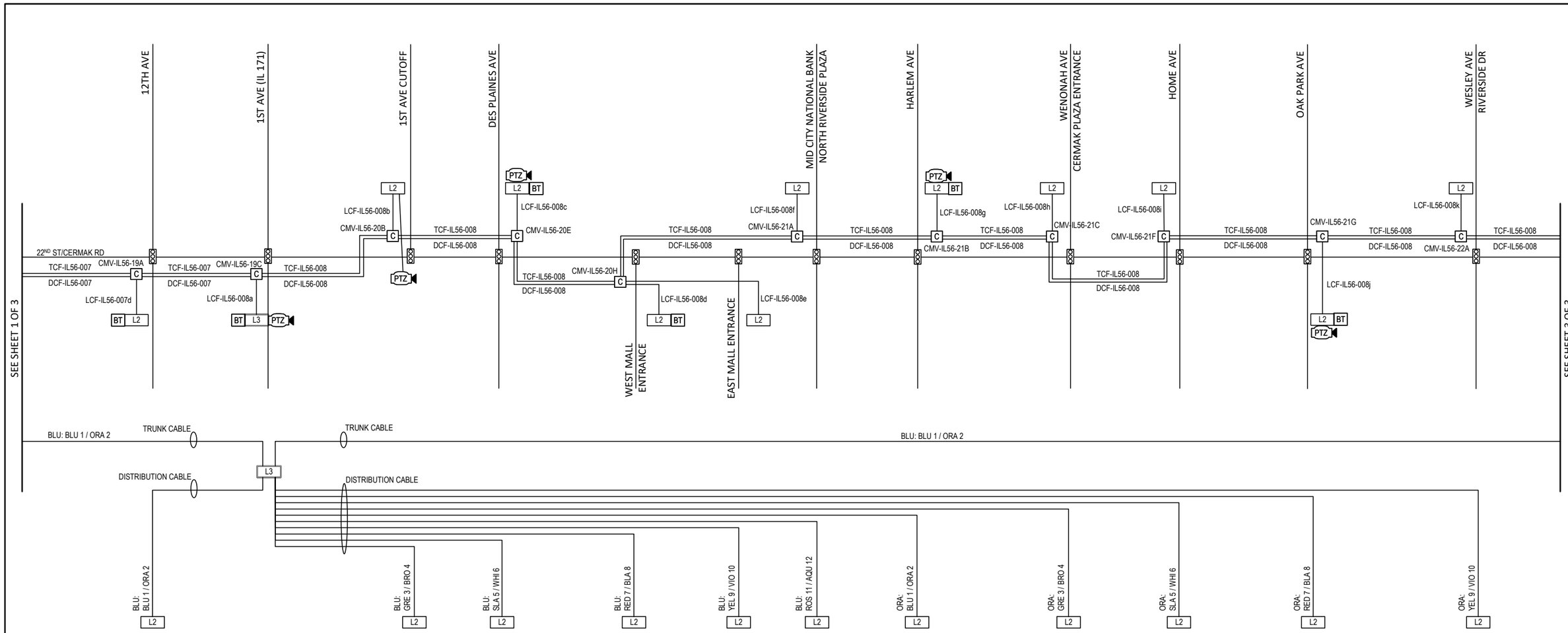

LEGEND

PROPOSED

———	FIBER OPTIC CABLE (FOC)
C	COMMUNICATIONS VAULT
L2	LAYER 2 NETWORK SWITCH IN CABINET
L3	LAYER 3 NETWORK SWITCH IN CABINET
DMS	DYNAMIC MESSAGE SIGN
PTZ	CCTV CAMERA, PAN-TILT-ZOOM
BT	BLUETOOTH DETECTOR
	TRAFFIC SIGNAL

NOTES:

1. NOT ALL COMMUNICATIONS VAULTS AND FIBER STRANDS ARE DEPICTED IN THIS OVERVIEW DIAGRAM. SEE COMMUNICATIONS SINGLE LINE AND FIBER SPLICING DIAGRAMS AND INTERCONNECT SHEETS FOR MORE INFORMATION.
2. COMMUNICATIONS VAULTS WITH LATERAL CABLE-FIBER (LCF) REQUIRE FUSION SPLICING FIBER STRANDS BETWEEN THE LCF AND DISTRIBUTION CABLE-FIBER (DCF).
3. TRUNK CABLE-FIBER (TCF) SHALL PASS THROUGH AND SHALL NOT BE CUT IN COMMUNICATIONS VAULTS EXCEPT WHERE A LAYER 3 NETWORK SWITCH IS LOCATED.
4. LABELS IN FIBER ASSIGNMENT OVERVIEW SCHEMATIC INDICATE FIBER TUBE AND FIBER STRANDS OF CABLE (TUBE: STRAND/STRAND) USING FIRST THREE CHARACTERS OF TIA-598 STANDARD COLORS.

ITS-12

PARSONS

DESIGNED - YJ	REVISED -		
DRAWN - MT	REVISED -		
CHECKED - RCB/KA	REVISED -		
DATE - 11-22-2024	REVISED -		

STATE OF ILLINOIS
DEPARTMENT OF TRANSPORTATION

OVERALL SYSTEM COMMUNICATIONS DIAGRAM (2 OF 3)
22ND ST. / CERMAK RD.

N.T.S. | SHEET OF SHEETS | STA. TO STA.

F.A.P. RTE.	SECTION	COUNTY	TOTAL SHEETS	SHEET NO.
365	20-265-SUR, SW & TS	DUPAGE/COOK	492	351
		CONTRACT NO. 62N39		
	ILLINOIS	FED. AID PROJECT		

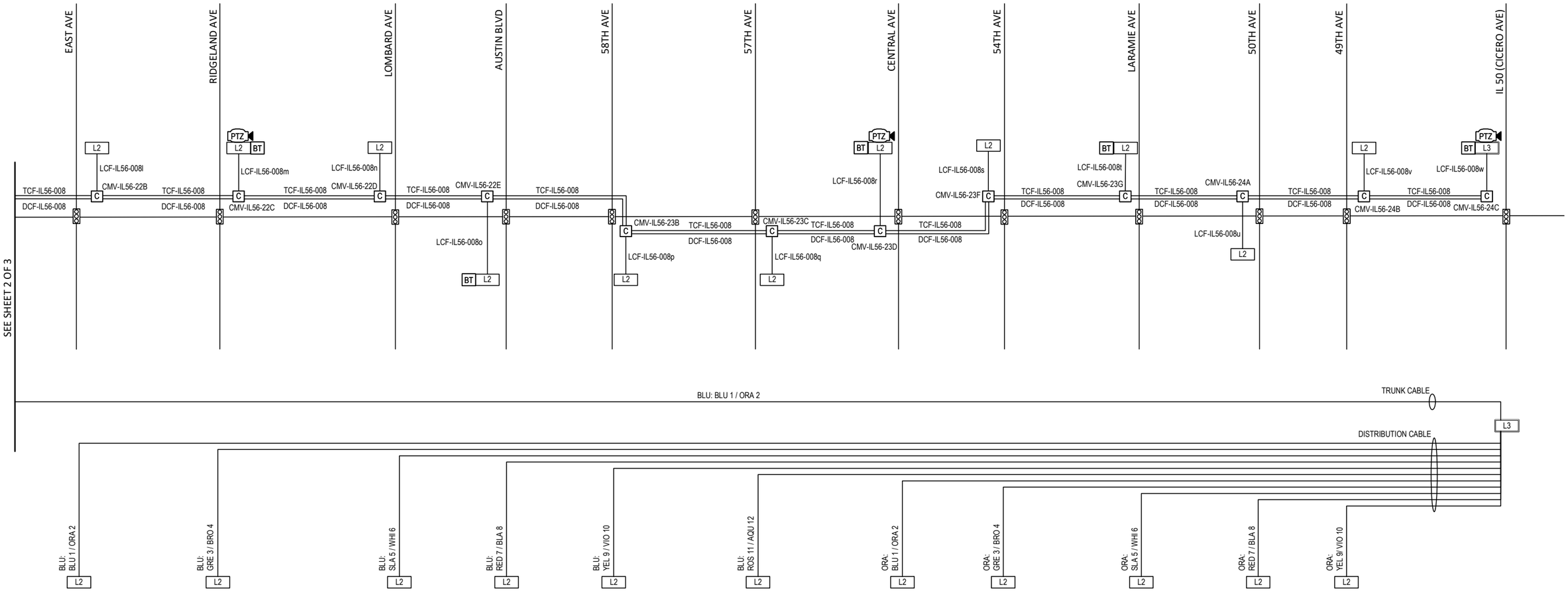

LEGEND

PROPOSED

——	FIBER OPTIC CABLE (FOC)
C	COMMUNICATIONS VAULT
L2	LAYER 2 NETWORK SWITCH IN CABINET
L3	LAYER 3 NETWORK SWITCH IN CABINET
DMS	DYNAMIC MESSAGE SIGN
PTZ	CCTV CAMERA, PAN-TILT-ZOOM
BT	BLUETOOTH DETECTOR
	TRAFFIC SIGNAL

NOTES:

1. NOT ALL COMMUNICATIONS VAULTS AND FIBER STRANDS ARE DEPICTED IN THIS OVERVIEW DIAGRAM. SEE COMMUNICATIONS SINGLE LINE AND FIBER SPLICING DIAGRAMS AND INTERCONNECT SHEETS FOR MORE INFORMATION.
2. COMMUNICATIONS VAULTS WITH LATERAL CABLE-FIBER (LCF) REQUIRE FUSION SPLICING FIBER STRANDS BETWEEN THE LCF AND DISTRIBUTION CABLE-FIBER (DCF).
3. TRUNK CABLE-FIBER (TCF) SHALL PASS THROUGH AND SHALL NOT BE CUT IN COMMUNICATIONS VAULTS EXCEPT WHERE A LAYER 3 NETWORK SWITCH IS LOCATED.
4. LABELS IN FIBER ASSIGNMENT OVERVIEW SCHEMATIC INDICATE FIBER TUBE AND FIBER STRANDS OF CABLE (TUBE: STRAND/STRAND) USING FIRST THREE CHARACTERS OF TIA-598 STANDARD COLORS.

ITS-13

PARSONS

DESIGNED - YJ	REVISED -	
DRAWN - MT	REVISED -	
CHECKED - RCB/KA	REVISED -	
DATE - 11-22-2024	REVISED -	

STATE OF ILLINOIS
DEPARTMENT OF TRANSPORTATION

OVERALL SYSTEM COMMUNICATIONS DIAGRAM (3 OF 3)
22ND ST. / CERMAK RD.

N.T.S. | SHEET OF SHEETS | STA. TO STA.

F.A.P. RTE.	SECTION	COUNTY	TOTAL SHEETS	SHEET NO.
365	20-265-SUR, SW & TS	DUPAGE/COOK	492	352
		CONTRACT NO. 62N39		
		ILLINOIS	FED. AID PROJECT	

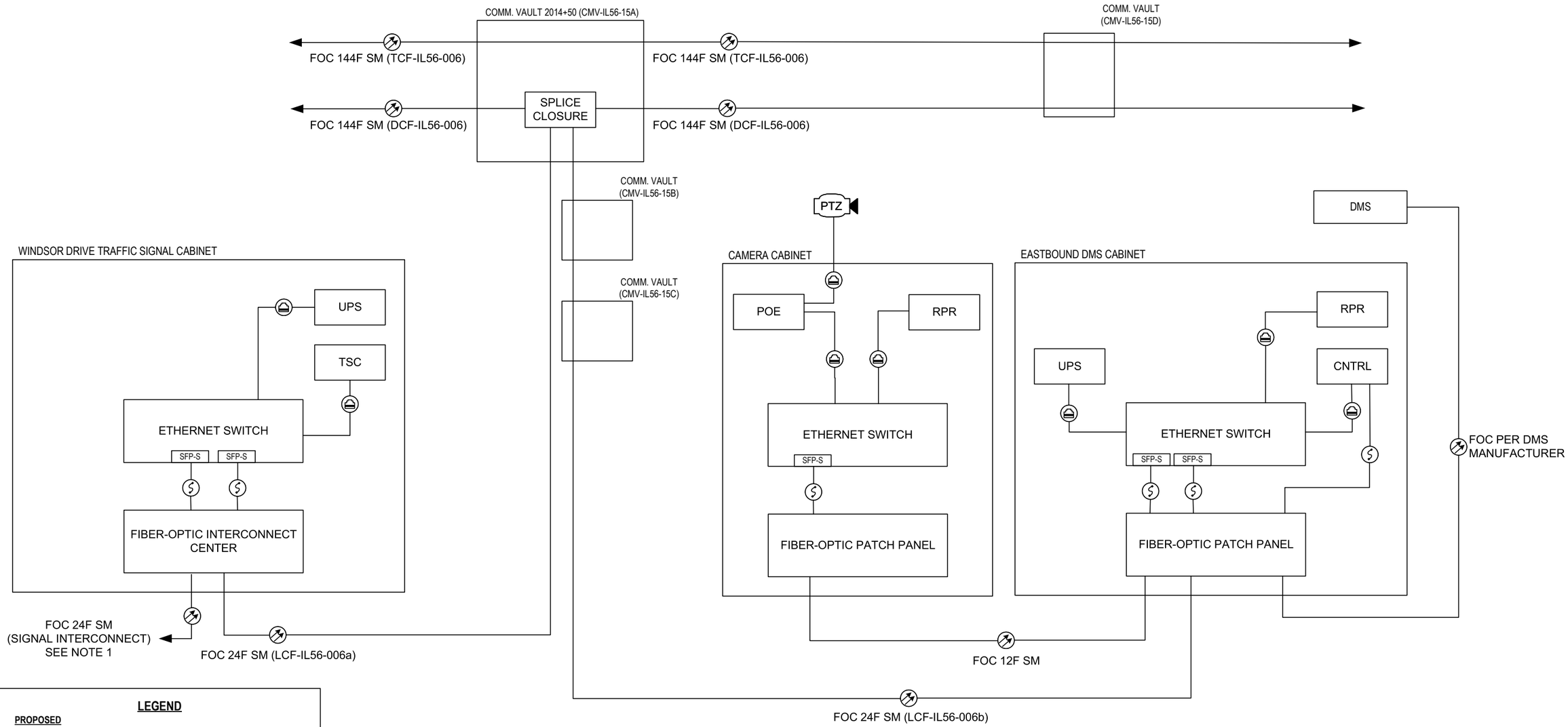

LEGEND

PROPOSED

- FIBER OPTIC CABLE (FOC)
- CAT 6 CABLE
- FIBER OPTIC PATCH CABLE, DUPLEX
- SFP-S — FIBER OPTIC TRANSCEIVER – SINGLE MODE
- DMS — DYNAMIC MESSAGE SIGN (DMS)
- CNTRL — DMS CONTROLLER
- TSC — TRAFFIC SIGNAL CONTROLLER
- PTZ — CCTV CAMERA, PAN-TILT-ZOOM
- RPR — REMOTE POWER RELAY
- UPS — UNINTERRUPTIBLE POWER SUPPLY
- POE — POWER OVER ETHERNET INJECTOR
- BT — BLUETOOTH DETECTOR

NOTES:

1. NOT ALL COMPONENTS FOR TRAFFIC SIGNAL OPERATIONS ARE SHOWN. REFER TO TRAFFIC SIGNAL PLANS AND INTERCONNECT SHEETS FOR ADDITIONAL INFORMATION.

ITS-14

PARSONS

DESIGNED - YJ	REVISED -	STATE OF ILLINOIS DEPARTMENT OF TRANSPORTATION	COMMUNICATIONS SINGLE LINE DIAGRAM 22ND ST AT WINDSOR DRIVE AND EB DMS
DRAWN - MT	REVISED -		
CHECKED - RCB/KA	REVISED -		
DATE - 11-22-2024	REVISED -		N.T.S. SHEET OF SHEETS STA. TO STA.

F.A.P. RTE.	SECTION	COUNTY	TOTAL SHEETS	SHEET NO.
365	20-265-SUR, SW & TS	DUPAGE/COOK	492	353
		CONTRACT NO. 62N39		
	ILLINOIS	FED. AID PROJECT		

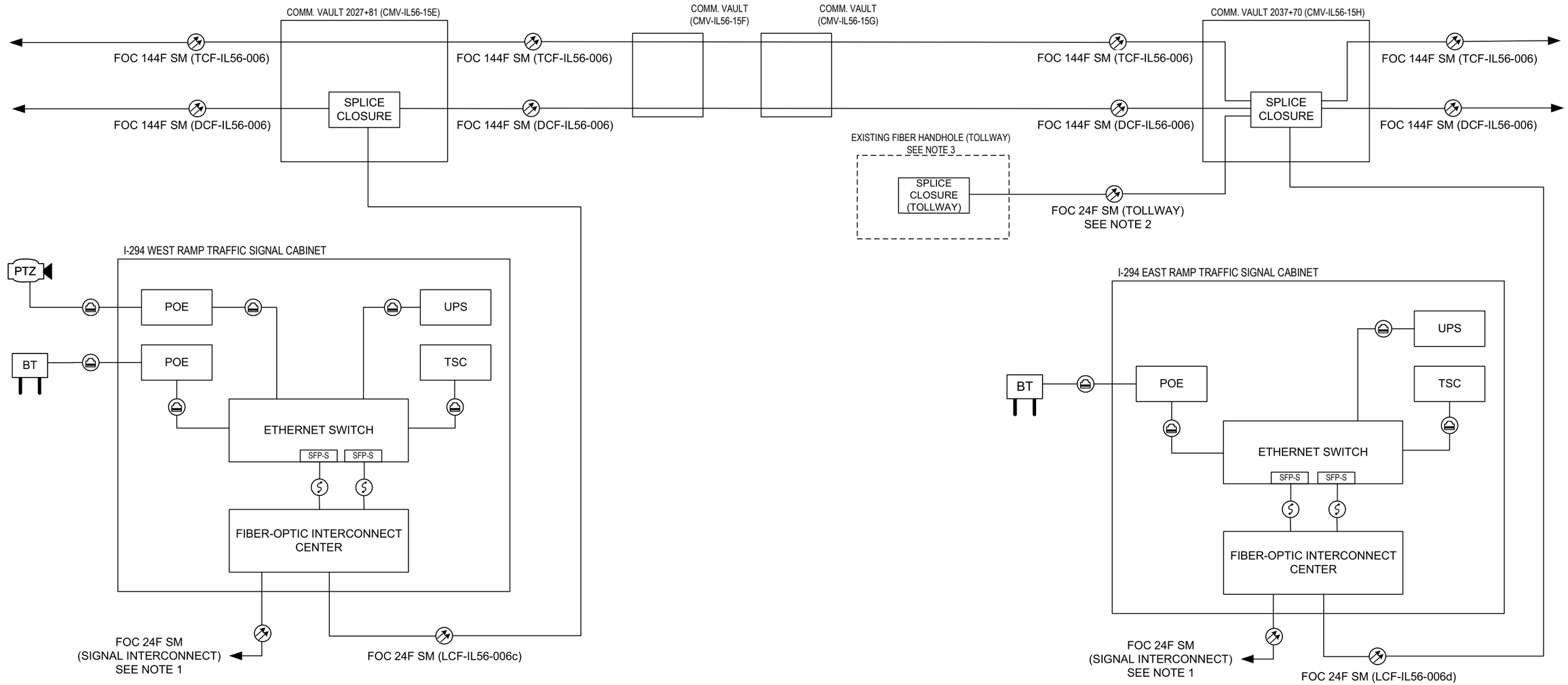

LEGEND

PROPOSED

- FIBER OPTIC CABLE (FOC)
- CAT 6 CABLE
- FIBER OPTIC PATCH CABLE, DUPLEX
- SFP-S — FIBER OPTIC TRANSCEIVER – SINGLE MODE
- DMS — DYNAMIC MESSAGE SIGN (DMS)
- CNTRL — DMS CONTROLLER
- TSC — TRAFFIC SIGNAL CONTROLLER
- PTZ — CCTV CAMERA, PAN-TILT-ZOOM
- RPR — REMOTE POWER RELAY
- UPS — UNINTERRUPTIBLE POWER SUPPLY
- POE — POWER OVER ETHERNET INJECTOR
- BT — BLUETOOTH DETECTOR

NOTES:

1. NOT ALL COMPONENTS FOR TRAFFIC SIGNAL OPERATIONS ARE SHOWN. REFER TO TRAFFIC SIGNAL PLANS AND INTERCONNECT SHEETS FOR ADDITIONAL INFORMATION.
2. NEW FIBER LATERAL CONNECTION TO BE COORDINATED WITH THE TOLLWAY FOR APPROVAL AND INSTALLATION BY TOLLWAY'S FIBER MAINTENANCE CONTRACTOR. FIBER ASSIGNMENTS SHALL BE COORDINATED WITH THE TOLLWAY'S FIBER CONTRACTOR SO THAT THE TWO BACKHAUL FIBER STRANDS HAVE CONNECTIVITY WITH THE TOLLWAY FIBER STRANDS DESIGNATED FOR IDOT COMMUNICATIONS.
3. POTENTIAL EXISTING TOLLWAY FIBER HANDHOLE IS HH # 132. THE TOLLWAY'S FIBER MAINTENANCE CONTRACTOR WILL IDENTIFY THE MOST APPROPRIATE EXISTING FIBER HANDHOLE AND WILL HANDLE SPLICING OF TOLLWAY FIBER. IDOT AND TOLLWAY WILL COORDINATE ON EXISTING NETWORK CONFIGURATION ADJUSTMENTS NEEDED TO ESTABLISH COMMUNICATIONS TO IDOT DISTRICT 1 HEADQUARTERS OVER EXISTING TOLLWAY NETWORK (I-294, I-90).

ITS-15

PARSONS

DESIGNED - YJ	REVISED -	STATE OF ILLINOIS DEPARTMENT OF TRANSPORTATION	COMMUNICATIONS SINGLE LINE DIAGRAM CERMAK RD AT I-294 WEST RAMP AND I-294 EAST RAMP
DRAWN - MT	REVISED -		
CHECKED - RCB/KA	REVISED -		
DATE - 11-22-2024	REVISED -		N.T.S. SHEET OF SHEETS STA. TO STA.

F.A.P. RTE.	SECTION	COUNTY	TOTAL SHEETS	SHEET NO.
365	20-265-SUR, SW & TS	DUPAGE/COOK	492	354
		CONTRACT NO. 62N39		
		ILLINOIS	FED. AID PROJECT	

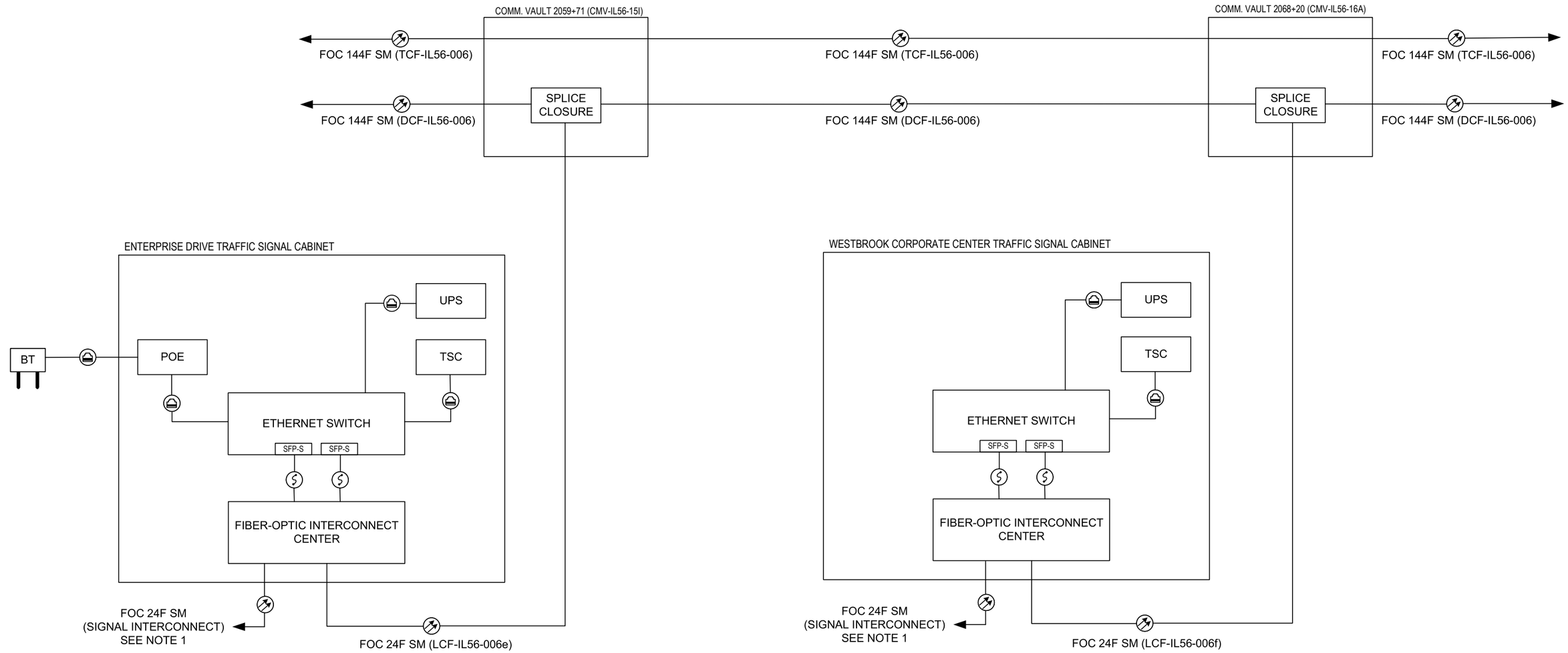

LEGEND

PROPOSED

	FIBER OPTIC CABLE (FOC)
	CAT 6 CABLE
	FIBER OPTIC PATCH CABLE, DUPLEX
SFP-S	FIBER OPTIC TRANSCEIVER – SINGLE MODE
DMS	DYNAMIC MESSAGE SIGN (DMS)
CNTRL	DMS CONTROLLER
TSC	TRAFFIC SIGNAL CONTROLLER
PTZ	CCTV CAMERA, PAN-TILT-ZOOM
RPR	REMOTE POWER RELAY
UPS	UNINTERRUPTIBLE POWER SUPPLY
POE	POWER OVER ETHERNET INJECTOR
BT	BLUETOOTH DETECTOR

NOTES:

1. NOT ALL COMPONENTS FOR TRAFFIC SIGNAL OPERATIONS ARE SHOWN. REFER TO TRAFFIC SIGNAL PLANS AND INTERCONNECT SHEETS FOR ADDITIONAL INFORMATION.

ITS-16

PARSONS

DESIGNED - YJ	REVISED -	
DRAWN - MT	REVISED -	
CHECKED - RCB/KA	REVISED -	
DATE - 11-22-2024	REVISED -	

STATE OF ILLINOIS
DEPARTMENT OF TRANSPORTATION

COMMUNICATIONS SINGLE LINE DIAGRAM
CERMAK RD AT ENTERPRISE DR AND WESTBROOK CORPORATE CENTER

N.T.S. | SHEET OF SHEETS | STA. TO STA.

F.A.P. RTE.	SECTION	COUNTY	TOTAL SHEETS	SHEET NO.
365	20-265-SUR, SW & TS	DUPAGE/COOK	492	355

CONTRACT NO. 62N39

ILLINOIS | FED. AID PROJECT

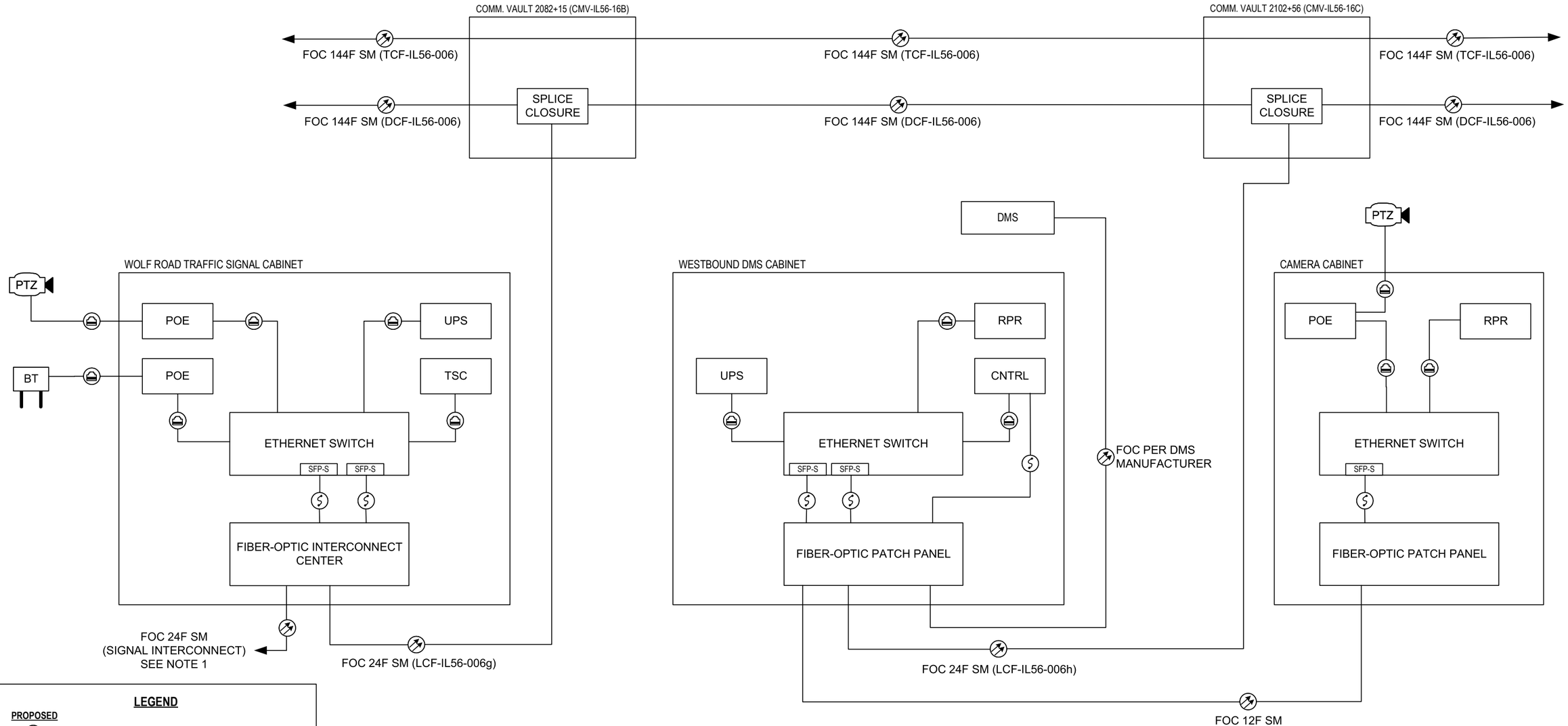

LEGEND

PROPOSED

- FIBER OPTIC CABLE (FOC)
- CAT 6 CABLE
- FIBER OPTIC PATCH CABLE, DUPLEX
- SFP-S — FIBER OPTIC TRANSCEIVER – SINGLE MODE
- DMS — DYNAMIC MESSAGE SIGN (DMS)
- CNTRL — DMS CONTROLLER
- TSC — TRAFFIC SIGNAL CONTROLLER
- PTZ — CCTV CAMERA, PAN-TILT-ZOOM
- RPR — REMOTE POWER RELAY
- UPS — UNINTERRUPTIBLE POWER SUPPLY
- POE — POWER OVER ETHERNET INJECTOR
- BT — BLUETOOTH DETECTOR

NOTES:

1. NOT ALL COMPONENTS FOR TRAFFIC SIGNAL OPERATIONS ARE SHOWN. REFER TO TRAFFIC SIGNAL PLANS AND INTERCONNECT SHEETS FOR ADDITIONAL INFORMATION.

ITS-17

PARSONS

DESIGNED - YJ	REVISED -	STATE OF ILLINOIS DEPARTMENT OF TRANSPORTATION	COMMUNICATIONS SINGLE LINE DIAGRAM CERMAK RD AT WOLF ROAD AND WB DMS
DRAWN - MT	REVISED -		
CHECKED - RCB/KA	REVISED -		
DATE - 11-22-2024	REVISED -		N.T.S. SHEET OF SHEETS STA. TO STA.

F.A.P. RTE.	SECTION	COUNTY	TOTAL SHEETS	SHEET NO.
365	20-265-SUR, SW & TS	DUPAGE/COOK	492	356
		CONTRACT NO. 62N39		
		ILLINOIS	FED. AID PROJECT	

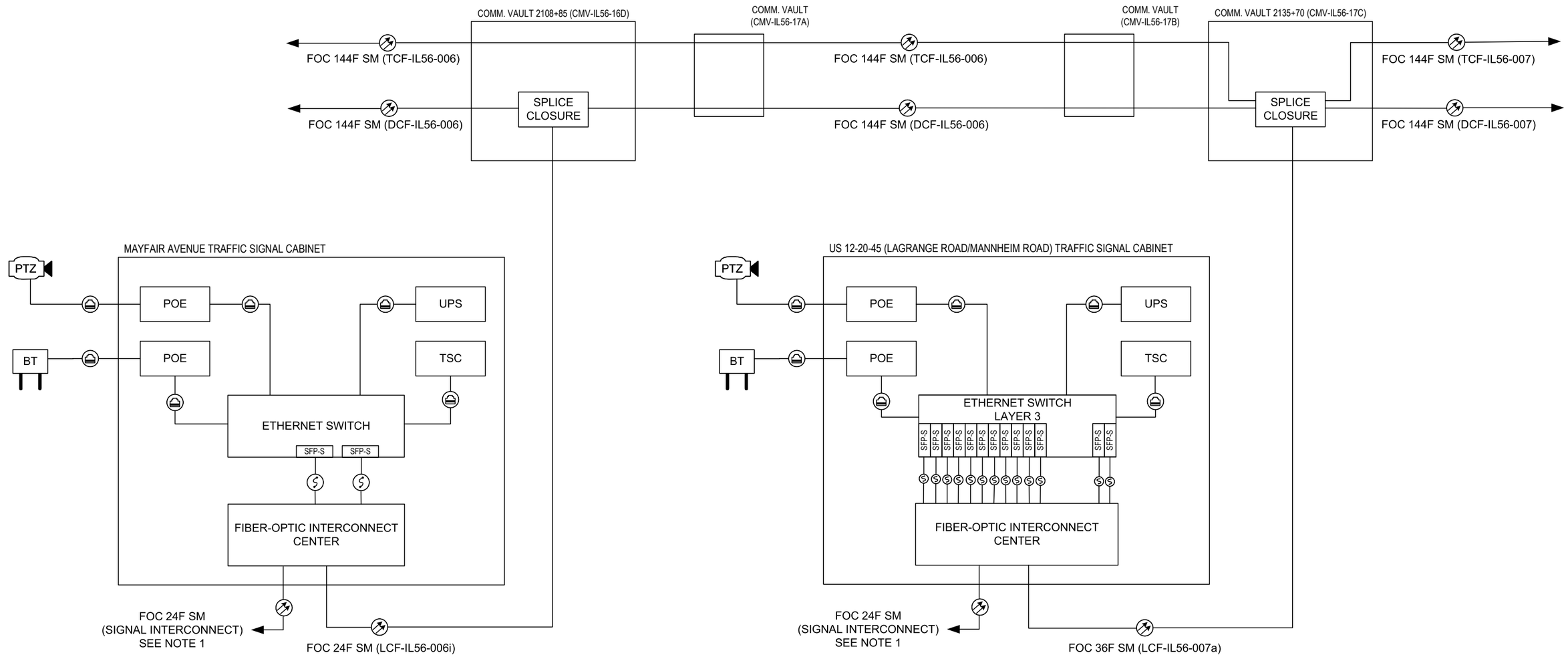

LEGEND

PROPOSED

	FIBER OPTIC CABLE (FOC)
	CAT 6 CABLE
	FIBER OPTIC PATCH CABLE, DUPLEX
SFP-S	FIBER OPTIC TRANSCEIVER – SINGLE MODE
DMS	DYNAMIC MESSAGE SIGN (DMS)
CNTRL	DMS CONTROLLER
TSC	TRAFFIC SIGNAL CONTROLLER
PTZ	CCTV CAMERA, PAN-TILT-ZOOM
RPR	REMOTE POWER RELAY
UPS	UNINTERRUPTIBLE POWER SUPPLY
POE	POWER OVER ETHERNET INJECTOR
BT	BLUETOOTH DETECTOR

NOTES:

1. NOT ALL COMPONENTS FOR TRAFFIC SIGNAL OPERATIONS ARE SHOWN. REFER TO TRAFFIC SIGNAL PLANS AND INTERCONNECT SHEETS FOR ADDITIONAL INFORMATION.

ITS-18

PARSONS

DESIGNED - YJ	REVISED -	STATE OF ILLINOIS DEPARTMENT OF TRANSPORTATION	COMMUNICATIONS SINGLE LINE DIAGRAM CERMAK RD AT MAYFAIR AVE AND US 12-20-45 (LAGRANGE RD/ MANNHEIM RD)
DRAWN - MT	REVISED -		
CHECKED - RCB/KA	REVISED -		
DATE - 11-22-2024	REVISED -		N.T.S. SHEET OF SHEETS STA. TO STA.

F.A.P. RTE.	SECTION	COUNTY	TOTAL SHEETS	SHEET NO.
365	20-265-SUR, SW & TS	DUPAGE/COOK	492	357
		CONTRACT NO. 62N39		
		ILLINOIS	FED. AID PROJECT	

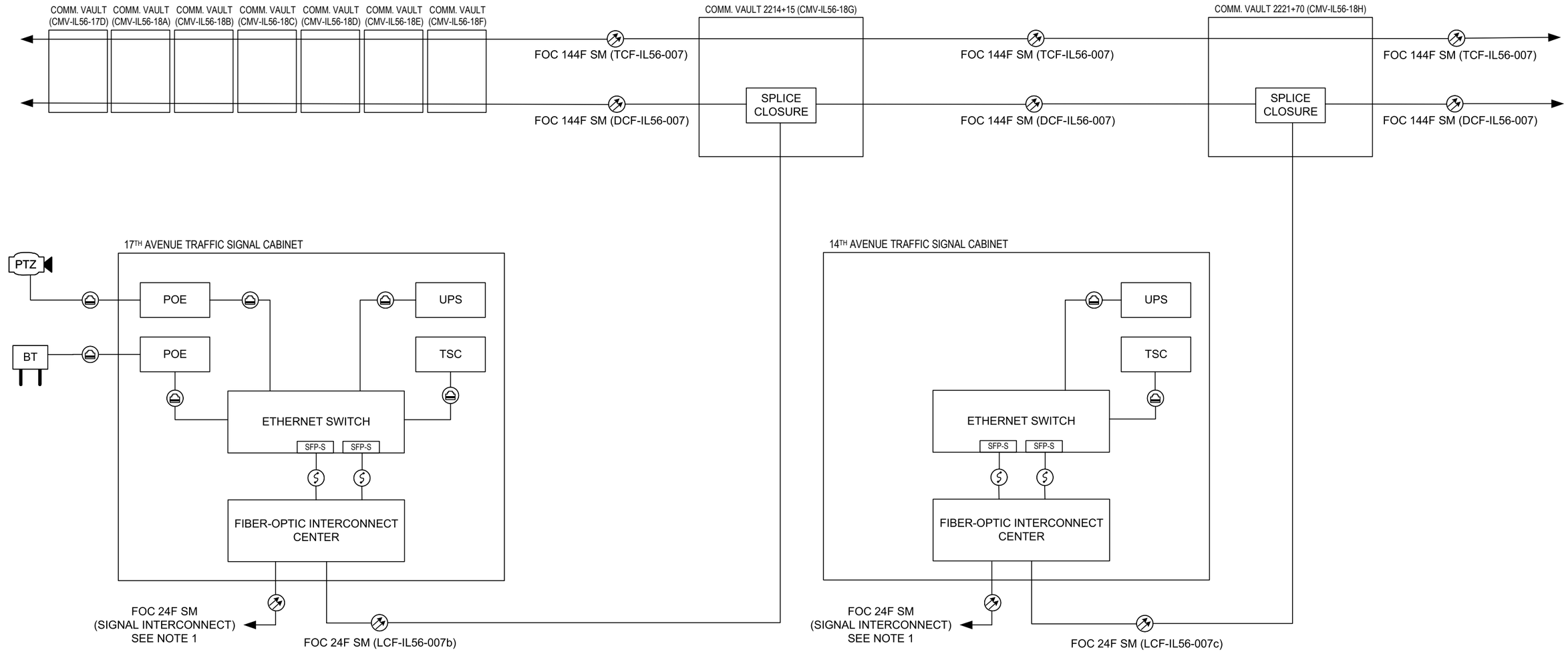

LEGEND

PROPOSED

	FIBER OPTIC CABLE (FOC)
	CAT 6 CABLE
	FIBER OPTIC PATCH CABLE, DUPLEX
SFP-S	FIBER OPTIC TRANSCEIVER – SINGLE MODE
DMS	DYNAMIC MESSAGE SIGN (DMS)
CNTRL	DMS CONTROLLER
TSC	TRAFFIC SIGNAL CONTROLLER
PTZ	CCTV CAMERA, PAN-TILT-ZOOM
RPR	REMOTE POWER RELAY
UPS	UNINTERRUPTIBLE POWER SUPPLY
POE	POWER OVER ETHERNET INJECTOR
BT	BLUETOOTH DETECTOR

NOTES:

1. NOT ALL COMPONENTS FOR TRAFFIC SIGNAL OPERATIONS ARE SHOWN. REFER TO TRAFFIC SIGNAL PLANS AND INTERCONNECT SHEETS FOR ADDITIONAL INFORMATION.

ITS-19

PARSONS

DESIGNED - YJ	REVISED -	
DRAWN - MT	REVISED -	
CHECKED - RCB/KA	REVISED -	
DATE - 11-22-2024	REVISED -	

STATE OF ILLINOIS
DEPARTMENT OF TRANSPORTATION

COMMUNICATIONS SINGLE LINE DIAGRAM
CERMAK RD AT 17TH AVENUE AND 14TH AVENUE

N.T.S. | SHEET OF SHEETS | STA. TO STA.

F.A.P. RTE.	SECTION	COUNTY	TOTAL SHEETS	SHEET NO.
365	20-265-SUR, SW & TS	DUPAGE/COOK	492	358
		CONTRACT NO. 62N39		
	ILLINOIS	FED. AID PROJECT		

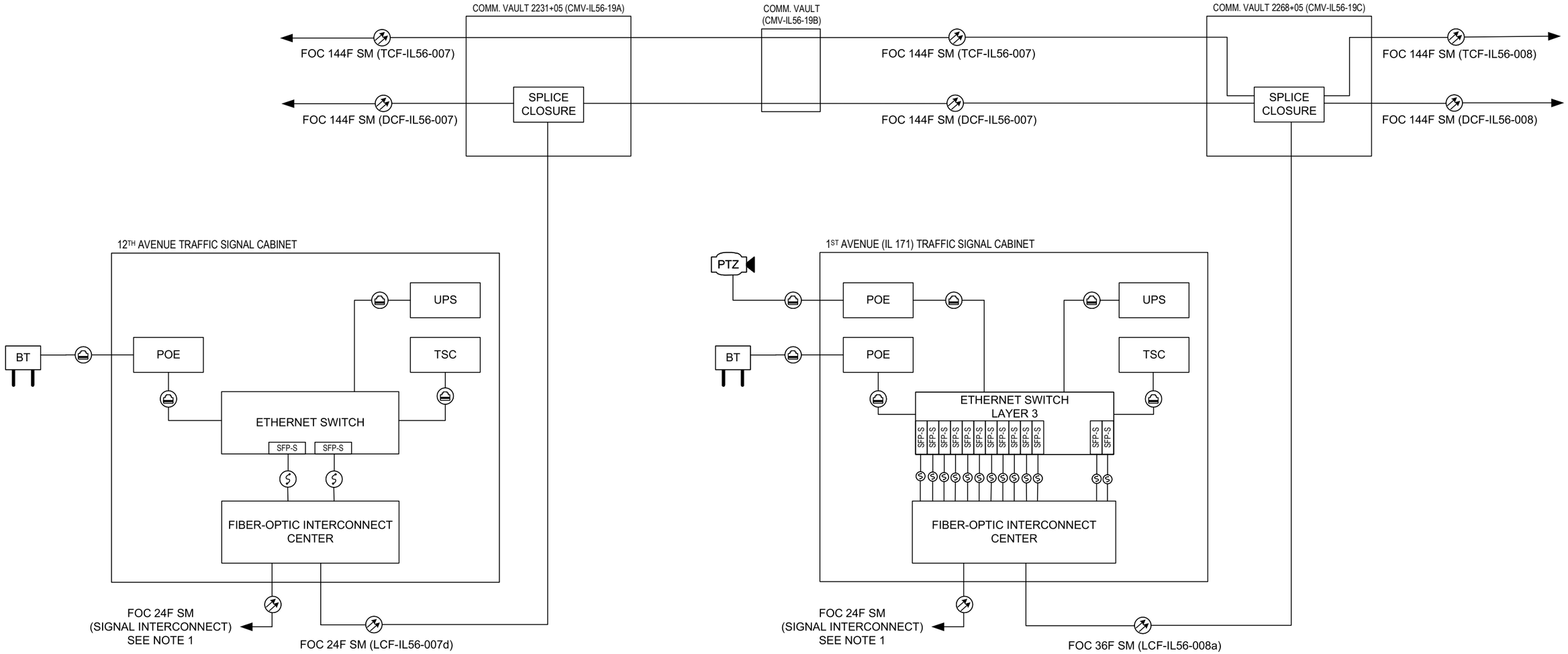

LEGEND

PROPOSED

	FIBER OPTIC CABLE (FOC)
	CAT 6 CABLE
	FIBER OPTIC PATCH CABLE, DUPLEX
SFP-S	FIBER OPTIC TRANSCEIVER – SINGLE MODE
DMS	DYNAMIC MESSAGE SIGN (DMS)
CNTRL	DMS CONTROLLER
TSC	TRAFFIC SIGNAL CONTROLLER
PTZ	CCTV CAMERA, PAN-TILT-ZOOM
RPR	REMOTE POWER RELAY
UPS	UNINTERRUPTIBLE POWER SUPPLY
POE	POWER OVER ETHERNET INJECTOR
BT	BLUETOOTH DETECTOR

NOTES:

1. NOT ALL COMPONENTS FOR TRAFFIC SIGNAL OPERATIONS ARE SHOWN. REFER TO TRAFFIC SIGNAL PLANS AND INTERCONNECT SHEETS FOR ADDITIONAL INFORMATION.

ITS-20

PARSONS

DESIGNED - YJ	REVISED -	
DRAWN - MT	REVISED -	
CHECKED - RCB/KA	REVISED -	
DATE - 11-22-2024	REVISED -	

STATE OF ILLINOIS
DEPARTMENT OF TRANSPORTATION

COMMUNICATIONS SINGLE LINE DIAGRAM
CERMAK RD AT 12TH AVENUE AND 1ST AVENUE (IL 171)

N.T.S. | SHEET OF SHEETS | STA. TO STA.

F.A.P. RTE.	SECTION	COUNTY	TOTAL SHEETS	SHEET NO.
365	20-265-SUR, SW & TS	DUPAGE/COOK	492	359

CONTRACT NO. 62N39

ILLINOIS | FED. AID PROJECT

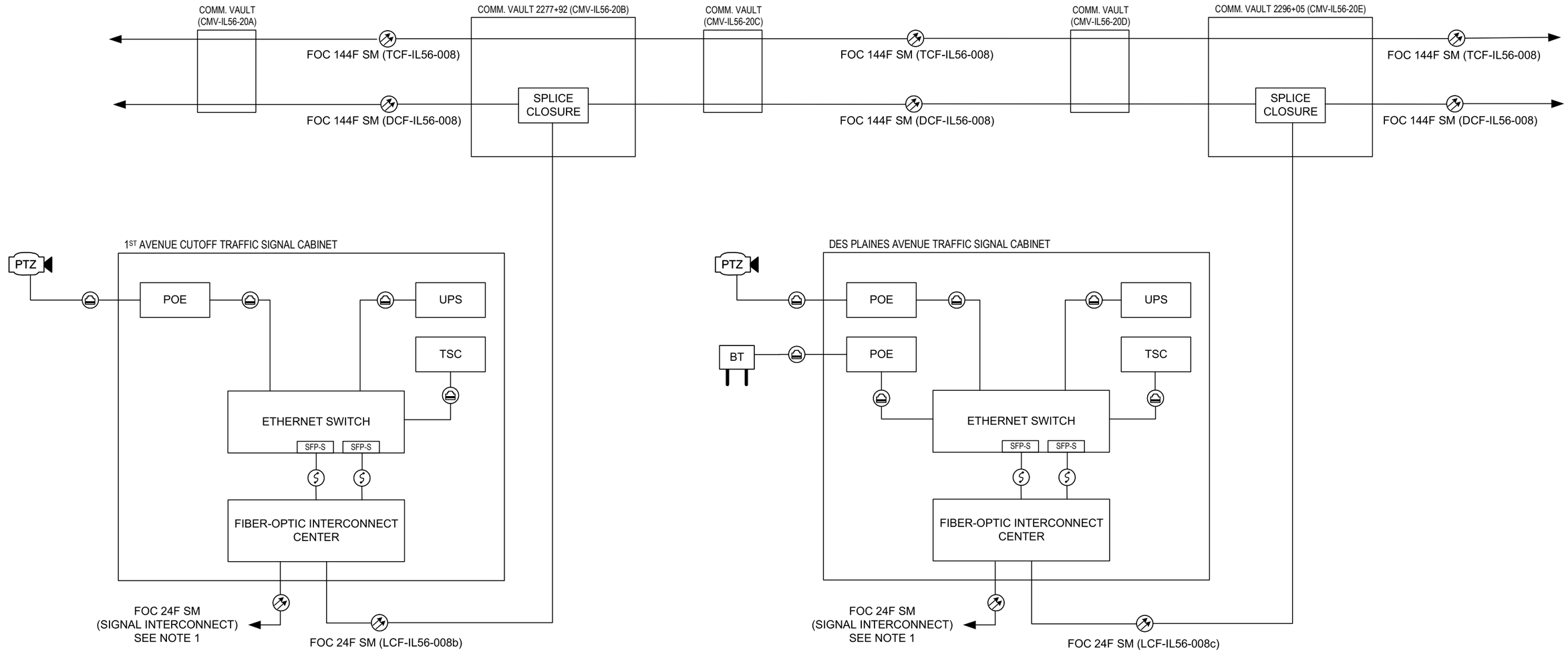

LEGEND

PROPOSED

	FIBER OPTIC CABLE (FOC)
	CAT 6 CABLE
	FIBER OPTIC PATCH CABLE, DUPLEX
SFP-S	FIBER OPTIC TRANSCEIVER – SINGLE MODE
DMS	DYNAMIC MESSAGE SIGN (DMS)
CNTRL	DMS CONTROLLER
TSC	TRAFFIC SIGNAL CONTROLLER
PTZ	CCTV CAMERA, PAN-TILT-ZOOM
RPR	REMOTE POWER RELAY
UPS	UNINTERRUPTIBLE POWER SUPPLY
POE	POWER OVER ETHERNET INJECTOR
BT	BLUETOOTH DETECTOR

NOTES:

1. NOT ALL COMPONENTS FOR TRAFFIC SIGNAL OPERATIONS ARE SHOWN. REFER TO TRAFFIC SIGNAL PLANS AND INTERCONNECT SHEETS FOR ADDITIONAL INFORMATION.

ITS-21

PARSONS

DESIGNED - YJ	REVISED -	
DRAWN - MT	REVISED -	
CHECKED - RCB/KA	REVISED -	
DATE - 11-22-2024	REVISED -	

STATE OF ILLINOIS
DEPARTMENT OF TRANSPORTATION

COMMUNICATIONS SINGLE LINE DIAGRAM
CERMAK RD AT 1ST AVENUE CUTOFF AND DES PLAINES AVENUE

N.T.S. | SHEET OF SHEETS | STA. TO STA.

F.A.P. RTE.	SECTION	COUNTY	TOTAL SHEETS	SHEET NO.
365	20-265-SUR, SW & TS	DUPAGE/COOK	492	360
		CONTRACT NO. 62N39		
	ILLINOIS	FED. AID PROJECT		

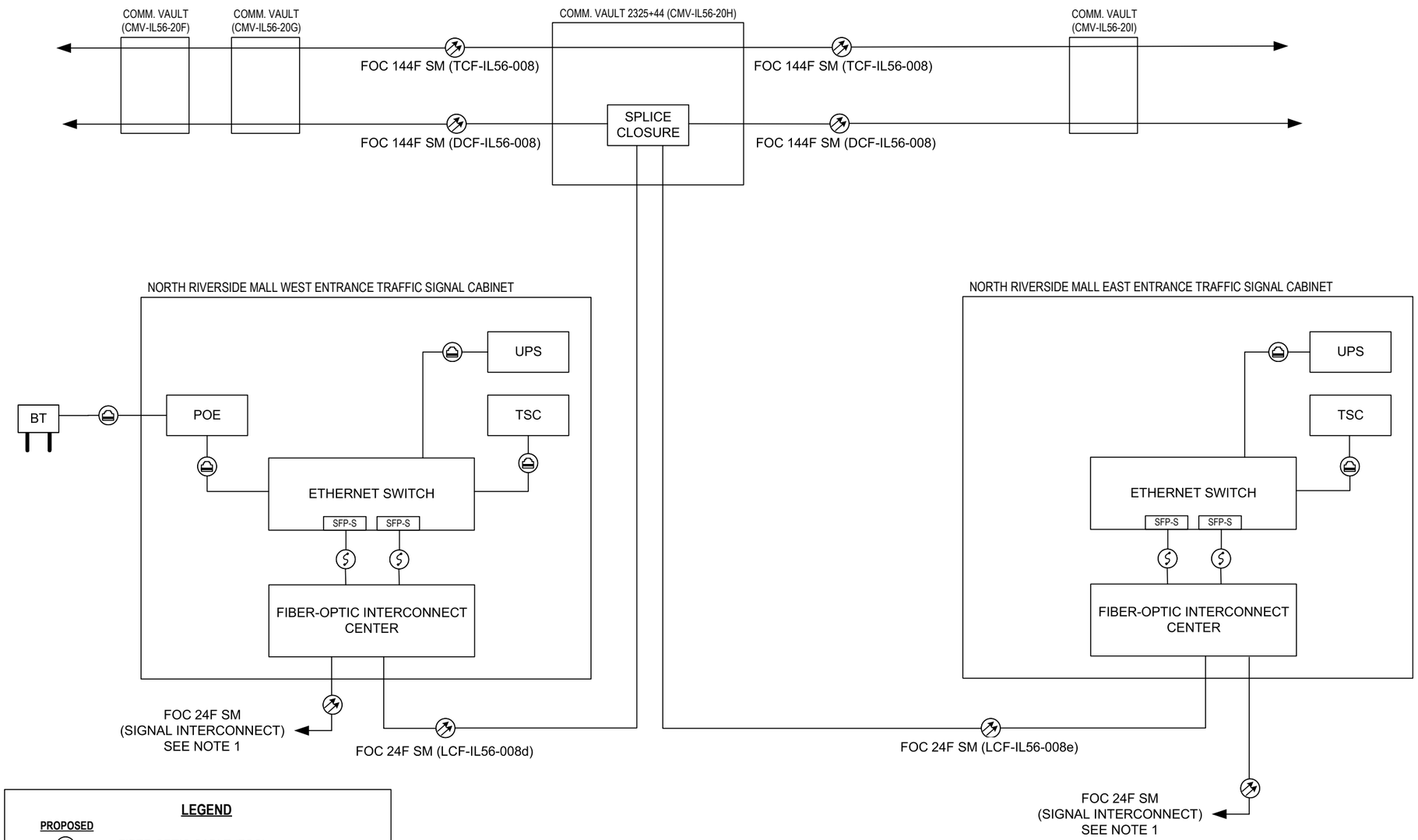

LEGEND

PROPOSED

	FIBER OPTIC CABLE (FOC)
	CAT 6 CABLE
	FIBER OPTIC PATCH CABLE, DUPLEX
SFP-S	FIBER OPTIC TRANSCEIVER – SINGLE MODE
DMS	DYNAMIC MESSAGE SIGN (DMS)
CNTRL	DMS CONTROLLER
TSC	TRAFFIC SIGNAL CONTROLLER
PTZ	CCTV CAMERA, PAN-TILT-ZOOM
RPR	REMOTE POWER RELAY
UPS	UNINTERRUPTIBLE POWER SUPPLY
POE	POWER OVER ETHERNET INJECTOR
BT	BLUETOOTH DETECTOR

NOTES:

1. NOT ALL COMPONENTS FOR TRAFFIC SIGNAL OPERATIONS ARE SHOWN. REFER TO TRAFFIC SIGNAL PLANS AND INTERCONNECT SHEETS FOR ADDITIONAL INFORMATION.

ITS-22

PARSONS

DESIGNED - YJ	REVISED -	
DRAWN - MT	REVISED -	
CHECKED - RCB/KA	REVISED -	
DATE - 11-22-2024	REVISED -	

STATE OF ILLINOIS
DEPARTMENT OF TRANSPORTATION

COMMUNICATIONS SINGLE LINE DIAGRAM
CERMAK RD AT N RIVERSIDE MALL EAST AND WEST ENTRANCES

N.T.S. | SHEET OF SHEETS | STA. TO STA.

F.A.P. RTE.	SECTION	COUNTY	TOTAL SHEETS	SHEET NO.
365	20-265-SUR, SW & TS	DUPAGE/COOK	492	361
		CONTRACT NO. 62N39		
	ILLINOIS	FED. AID PROJECT		

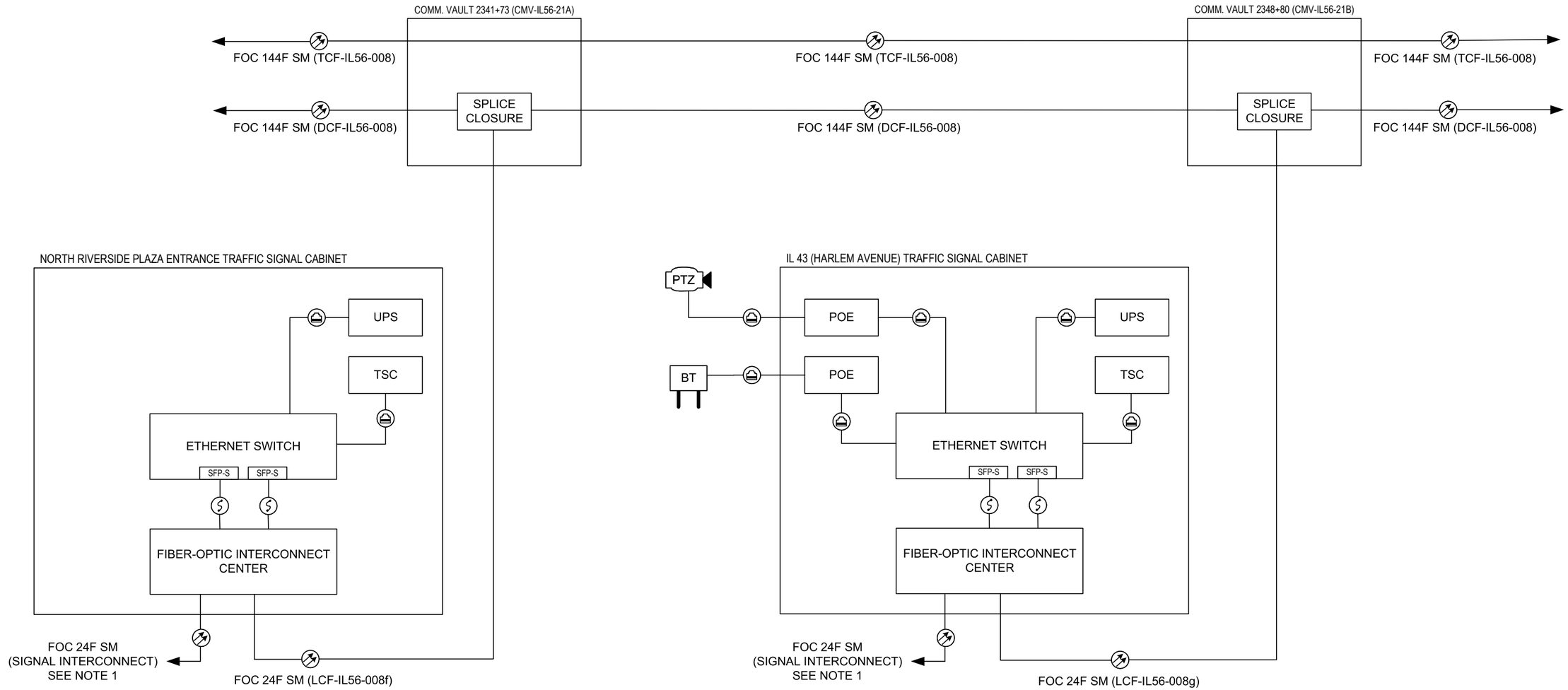

LEGEND

PROPOSED

	FIBER OPTIC CABLE (FOC)
	CAT 6 CABLE
	FIBER OPTIC PATCH CABLE, DUPLEX
SFP-S	FIBER OPTIC TRANSCEIVER – SINGLE MODE
DMS	DYNAMIC MESSAGE SIGN (DMS)
CNTRL	DMS CONTROLLER
TSC	TRAFFIC SIGNAL CONTROLLER
PTZ	CCTV CAMERA, PAN-TILT-ZOOM
RPR	REMOTE POWER RELAY
UPS	UNINTERRUPTIBLE POWER SUPPLY
POE	POWER OVER ETHERNET INJECTOR
BT	BLUETOOTH DETECTOR

NOTES:

1. NOT ALL COMPONENTS FOR TRAFFIC SIGNAL OPERATIONS ARE SHOWN. REFER TO TRAFFIC SIGNAL PLANS AND INTERCONNECT SHEETS FOR ADDITIONAL INFORMATION.

ITS-23

PARSONS

DESIGNED - YJ	REVISED -	
DRAWN - MT	REVISED -	
CHECKED - RCB/KA	REVISED -	
DATE - 11-22-2024	REVISED -	

STATE OF ILLINOIS
DEPARTMENT OF TRANSPORTATION

COMMUNICATIONS SINGLE LINE DIAGRAM
CERMAK RD AT N RIVERSIDE PLAZA ENTRANCE AND HARLEM AVE

N.T.S. | SHEET OF SHEETS | STA. TO STA.

F.A.P. RTE.	SECTION	COUNTY	TOTAL SHEETS	SHEET NO.
365	20-265-SUR, SW & TS	DUPAGE/COOK	492	362

CONTRACT NO. 62N39

ILLINOIS | FED. AID PROJECT

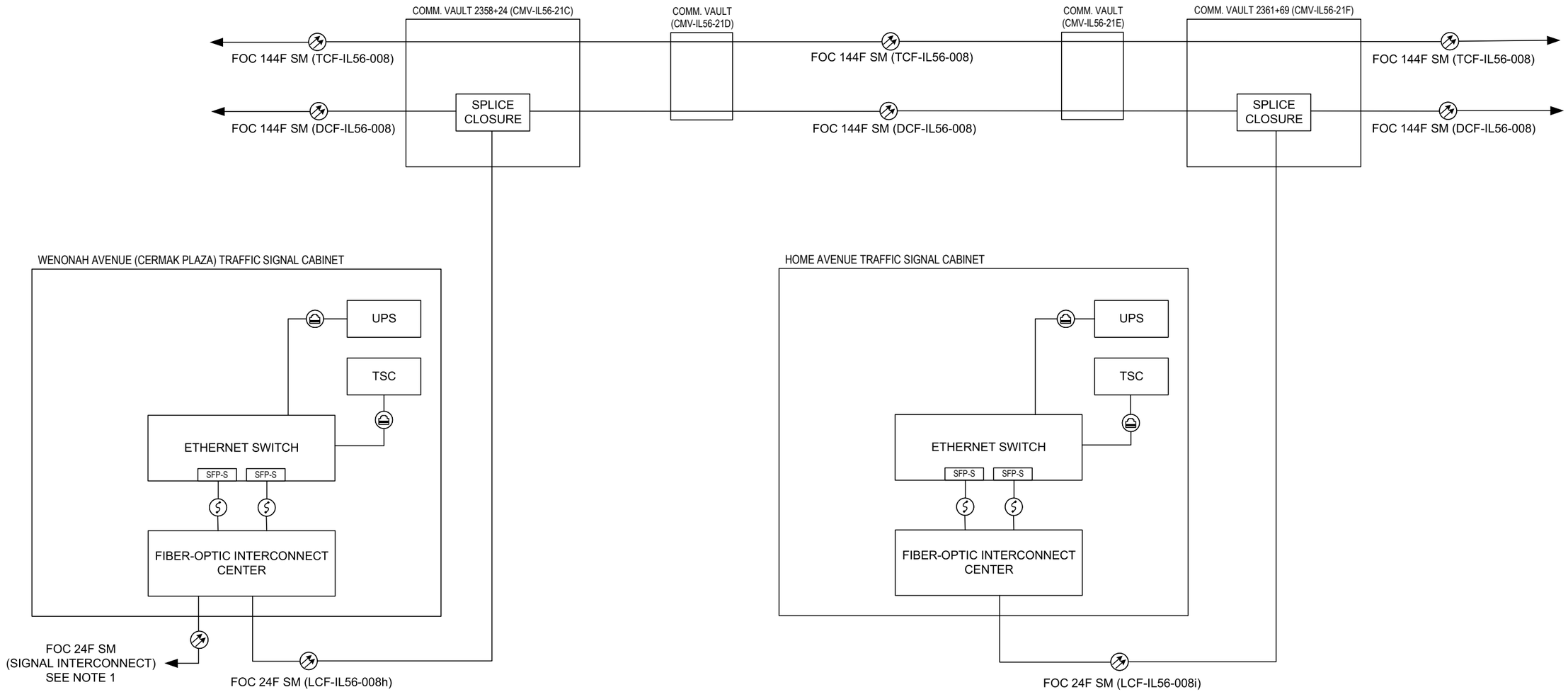

LEGEND

PROPOSED

	FIBER OPTIC CABLE (FOC)
	CAT 6 CABLE
	FIBER OPTIC PATCH CABLE, DUPLEX
SFP-S	FIBER OPTIC TRANSCEIVER – SINGLE MODE
DMS	DYNAMIC MESSAGE SIGN (DMS)
CNTRL	DMS CONTROLLER
TSC	TRAFFIC SIGNAL CONTROLLER
PTZ	CCTV CAMERA, PAN-TILT-ZOOM
RPR	REMOTE POWER RELAY
UPS	UNINTERRUPTIBLE POWER SUPPLY
POE	POWER OVER ETHERNET INJECTOR
BT	BLUETOOTH DETECTOR

NOTES:

1. NOT ALL COMPONENTS FOR TRAFFIC SIGNAL OPERATIONS ARE SHOWN. REFER TO TRAFFIC SIGNAL PLANS AND INTERCONNECT SHEETS FOR ADDITIONAL INFORMATION.

ITS-24

PARSONS

DESIGNED - YJ	REVISED -	STATE OF ILLINOIS DEPARTMENT OF TRANSPORTATION	COMMUNICATIONS SINGLE LINE DIAGRAM CERMAK RD AT WENONAH AVE (CERMAK PLAZA) AND HOME AVE
DRAWN - MT	REVISED -		
CHECKED - RCB/KA	REVISED -		
DATE - 11-22-2024	REVISED -		N.T.S. SHEET OF SHEETS STA. TO STA.

F.A.P. RTE.	SECTION	COUNTY	TOTAL SHEETS	SHEET NO.
365	20-265-SUR, SW & TS	DUPAGE/COOK	492	363
		CONTRACT NO. 62N39		
	ILLINOIS	FED. AID PROJECT		

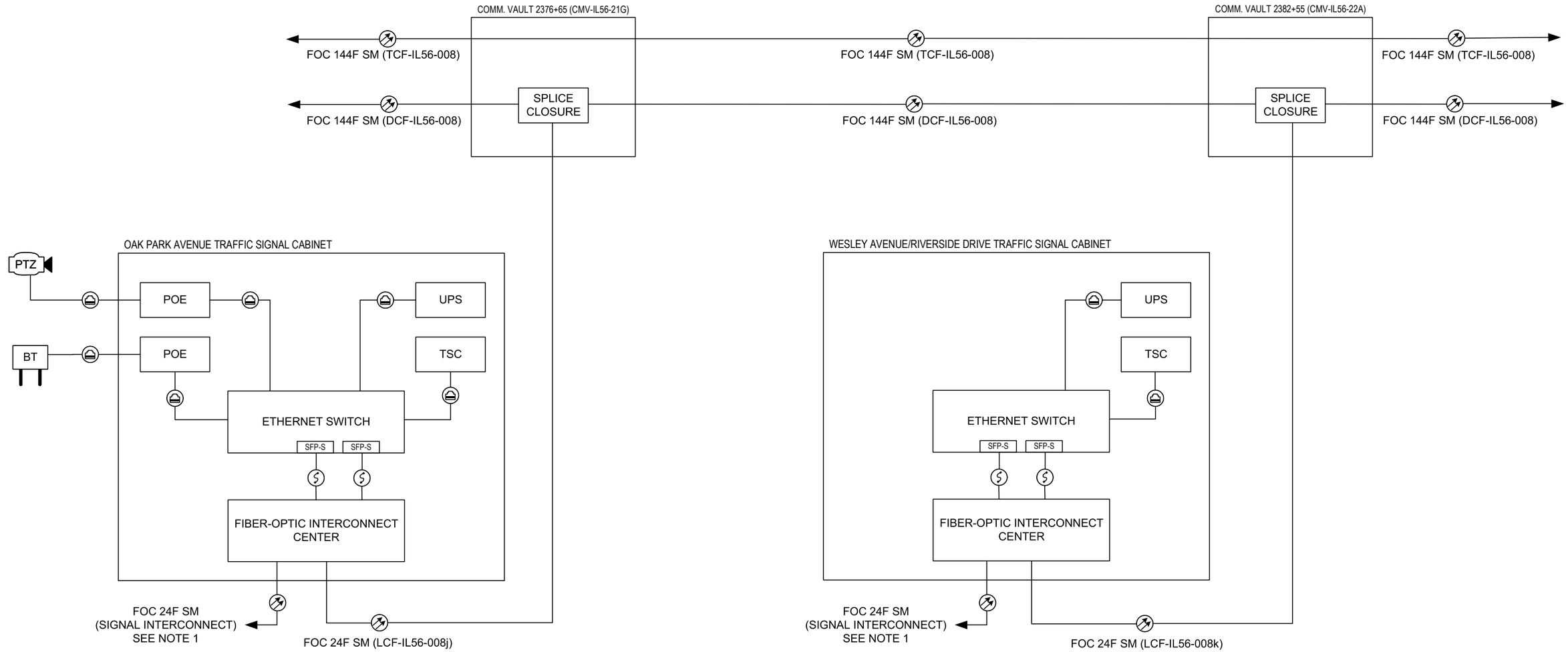

LEGEND

PROPOSED

	FIBER OPTIC CABLE (FOC)
	CAT 6 CABLE
	FIBER OPTIC PATCH CABLE, DUPLEX
SFP-S	FIBER OPTIC TRANSCEIVER – SINGLE MODE
DMS	DYNAMIC MESSAGE SIGN (DMS)
CNTRL	DMS CONTROLLER
TSC	TRAFFIC SIGNAL CONTROLLER
PTZ	CCTV CAMERA, PAN-TILT-ZOOM
RPR	REMOTE POWER RELAY
UPS	UNINTERRUPTIBLE POWER SUPPLY
POE	POWER OVER ETHERNET INJECTOR
BT	BLUETOOTH DETECTOR

NOTES:

1. NOT ALL COMPONENTS FOR TRAFFIC SIGNAL OPERATIONS ARE SHOWN. REFER TO TRAFFIC SIGNAL PLANS AND INTERCONNECT SHEETS FOR ADDITIONAL INFORMATION.

ITS-25

PARSONS

DESIGNED - YJ	REVISED -		
DRAWN - MT	REVISED -		
CHECKED - RCB/KA	REVISED -		
DATE - 11-22-2024	REVISED -		

STATE OF ILLINOIS
DEPARTMENT OF TRANSPORTATION

COMMUNICATIONS SINGLE LINE DIAGRAM
CERMAK RD AT OAK PARK AVE AND WESLEY AVE/RIVERSIDE DR

N.T.S. | SHEET OF SHEETS | STA. TO STA.

F.A.P. RTE.	SECTION	COUNTY	TOTAL SHEETS	SHEET NO.
365	20-265-SUR, SW & TS	DUPAGE/COOK	492	364
		CONTRACT NO. 62N39		
	ILLINOIS	FED. AID PROJECT		

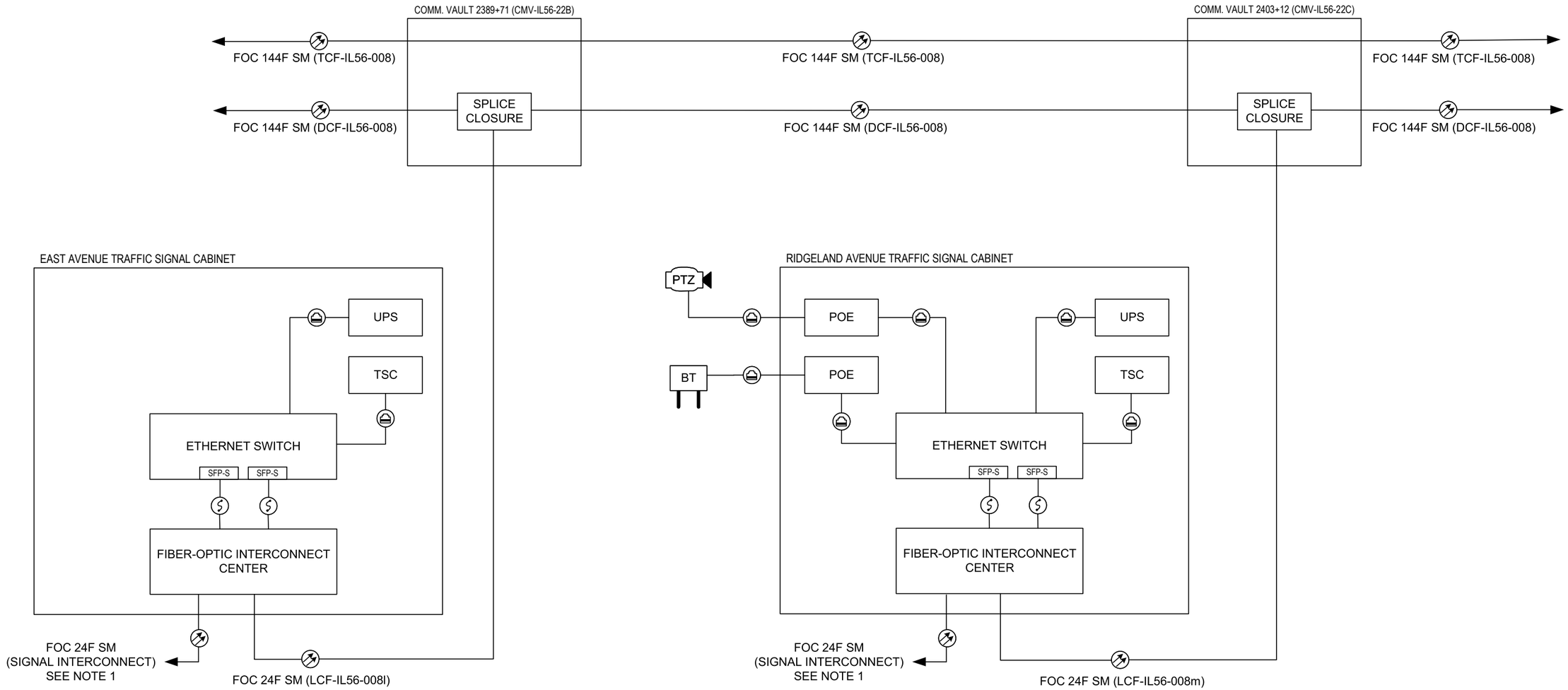

LEGEND

PROPOSED

	FIBER OPTIC CABLE (FOC)
	CAT 6 CABLE
	FIBER OPTIC PATCH CABLE, DUPLEX
SFP-S	FIBER OPTIC TRANSCEIVER – SINGLE MODE
DMS	DYNAMIC MESSAGE SIGN (DMS)
CNTRL	DMS CONTROLLER
TSC	TRAFFIC SIGNAL CONTROLLER
PTZ	CCTV CAMERA, PAN-TILT-ZOOM
RPR	REMOTE POWER RELAY
UPS	UNINTERRUPTIBLE POWER SUPPLY
POE	POWER OVER ETHERNET INJECTOR
BT	BLUETOOTH DETECTOR

NOTES:

1. NOT ALL COMPONENTS FOR TRAFFIC SIGNAL OPERATIONS ARE SHOWN. REFER TO TRAFFIC SIGNAL PLANS AND INTERCONNECT SHEETS FOR ADDITIONAL INFORMATION.

ITS-26

PARSONS

DESIGNED - YJ	REVISED -	
DRAWN - MT	REVISED -	
CHECKED - RCB/KA	REVISED -	
DATE - 11-22-2024	REVISED -	

STATE OF ILLINOIS
DEPARTMENT OF TRANSPORTATION

COMMUNICATIONS SINGLE LINE DIAGRAM
CERMAK RD AT EAST AVENUE AND RIDGELAND AVENUE

N.T.S. | SHEET OF SHEETS | STA. TO STA.

F.A.P. RTE.	SECTION	COUNTY	TOTAL SHEETS	SHEET NO.
365	20-265-SUR, SW & TS	DUPAGE/COOK	492	365
		CONTRACT NO. 62N39		
	ILLINOIS	FED. AID PROJECT		

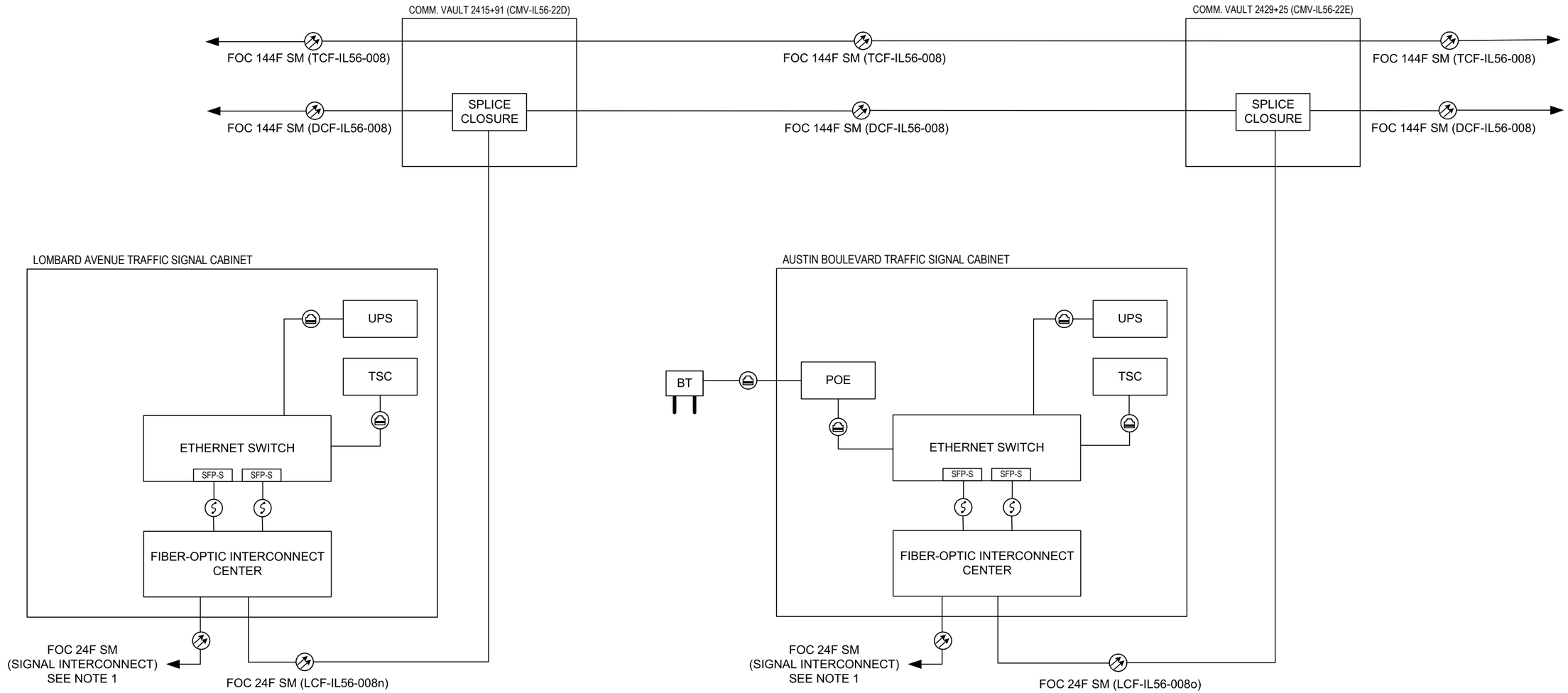

LEGEND

PROPOSED

	FIBER OPTIC CABLE (FOC)
	CAT 6 CABLE
	FIBER OPTIC PATCH CABLE, DUPLEX
SFP-S	FIBER OPTIC TRANSCEIVER – SINGLE MODE
DMS	DYNAMIC MESSAGE SIGN (DMS)
CNTRL	DMS CONTROLLER
TSC	TRAFFIC SIGNAL CONTROLLER
PTZ	CCTV CAMERA, PAN-TILT-ZOOM
RPR	REMOTE POWER RELAY
UPS	UNINTERRUPTIBLE POWER SUPPLY
POE	POWER OVER ETHERNET INJECTOR
BT	BLUETOOTH DETECTOR

NOTES:

1. NOT ALL COMPONENTS FOR TRAFFIC SIGNAL OPERATIONS ARE SHOWN. REFER TO TRAFFIC SIGNAL PLANS AND INTERCONNECT SHEETS FOR ADDITIONAL INFORMATION.

ITS-27

PARSONS

DESIGNED - YJ	REVISED -		
DRAWN - MT	REVISED -		
CHECKED - RCB/KA	REVISED -		
DATE - 11-22-2024	REVISED -		

STATE OF ILLINOIS
DEPARTMENT OF TRANSPORTATION

COMMUNICATIONS SINGLE LINE DIAGRAM
CERMAK RD AT LOMBARD AVENUE AND AUSTIN BOULEVARD

N.T.S. | SHEET OF SHEETS | STA. TO STA.

F.A.P. RTE.	SECTION	COUNTY	TOTAL SHEETS	SHEET NO.
365	20-265-SUR, SW & TS	DUPAGE/COOK	492	366
		CONTRACT NO. 62N39		
	ILLINOIS	FED. AID PROJECT		

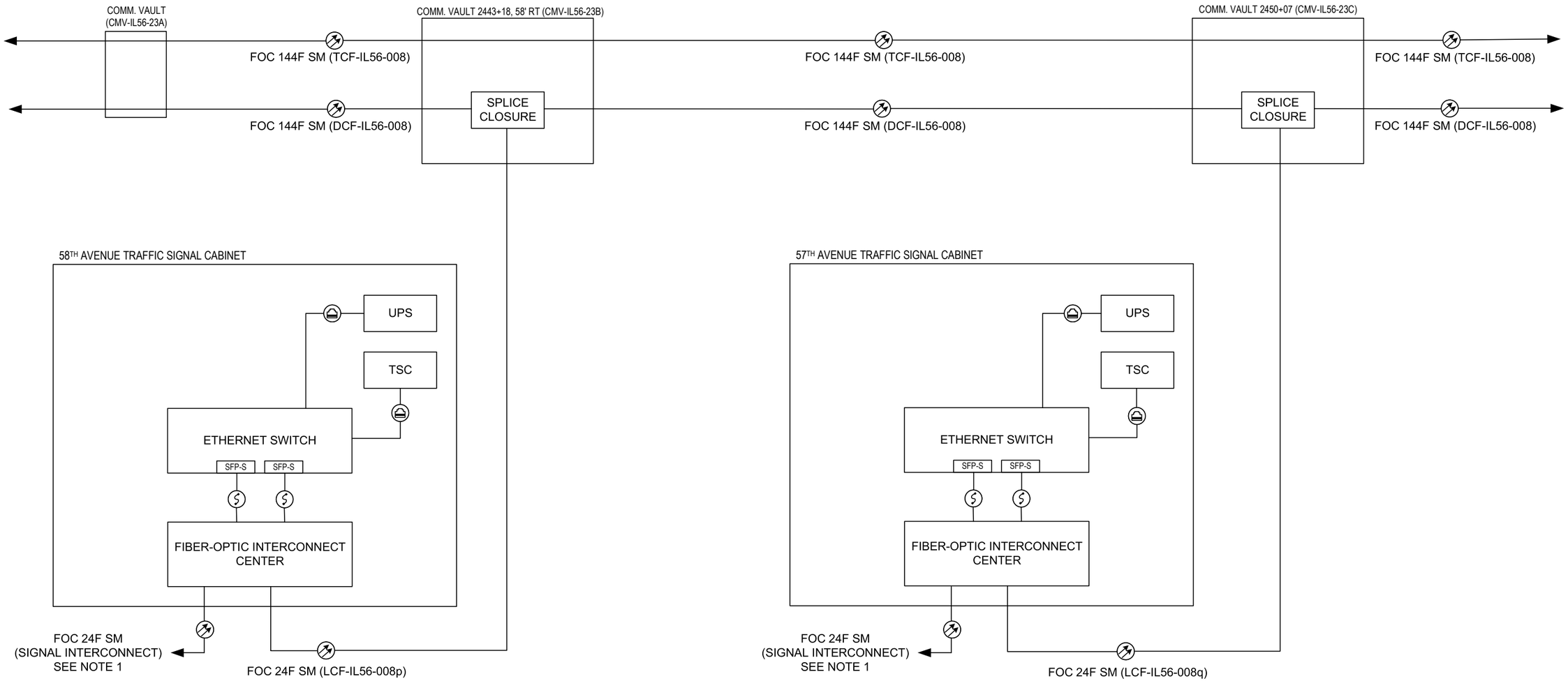

LEGEND

PROPOSED

	FIBER OPTIC CABLE (FOC)
	CAT 6 CABLE
	FIBER OPTIC PATCH CABLE, DUPLEX
SFP-S	FIBER OPTIC TRANSCEIVER – SINGLE MODE
DMS	DYNAMIC MESSAGE SIGN (DMS)
CNTRL	DMS CONTROLLER
TSC	TRAFFIC SIGNAL CONTROLLER
PTZ	CCTV CAMERA, PAN-TILT-ZOOM
RPR	REMOTE POWER RELAY
UPS	UNINTERRUPTIBLE POWER SUPPLY
POE	POWER OVER ETHERNET INJECTOR
BT	BLUETOOTH DETECTOR

NOTES:

1. NOT ALL COMPONENTS FOR TRAFFIC SIGNAL OPERATIONS ARE SHOWN. REFER TO TRAFFIC SIGNAL PLANS AND INTERCONNECT SHEETS FOR ADDITIONAL INFORMATION.

ITS-28

PARSONS

DESIGNED - YJ	REVISED -	STATE OF ILLINOIS DEPARTMENT OF TRANSPORTATION	COMMUNICATIONS SINGLE LINE DIAGRAM CERMAK RD AT 58TH AVENUE AND 57TH AVENUE
DRAWN - MT	REVISED -		
CHECKED - RCB/KA	REVISED -		
DATE - 11-22-2024	REVISED -		N.T.S. SHEET OF SHEETS STA. TO STA.

F.A.P. RTE.	SECTION	COUNTY	TOTAL SHEETS	SHEET NO.
365	20-265-SUR, SW & TS	DUPAGE/COOK	492	367
		CONTRACT NO. 62N39		
		ILLINOIS	FED. AID PROJECT	

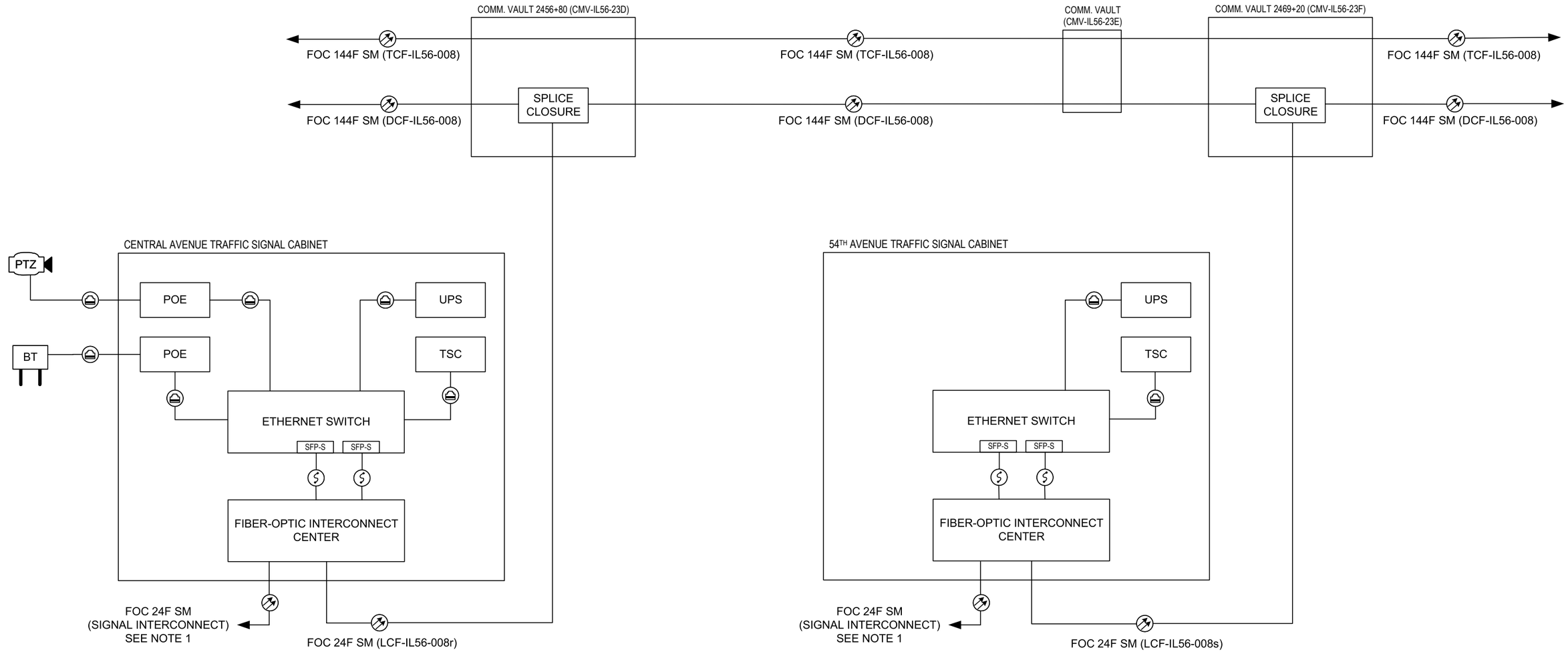

LEGEND

PROPOSED

	FIBER OPTIC CABLE (FOC)
	CAT 6 CABLE
	FIBER OPTIC PATCH CABLE, DUPLEX
SFP-S	FIBER OPTIC TRANSCEIVER – SINGLE MODE
DMS	DYNAMIC MESSAGE SIGN (DMS)
CNTRL	DMS CONTROLLER
TSC	TRAFFIC SIGNAL CONTROLLER
PTZ	CCTV CAMERA, PAN-TILT-ZOOM
RPR	REMOTE POWER RELAY
UPS	UNINTERRUPTIBLE POWER SUPPLY
POE	POWER OVER ETHERNET INJECTOR
BT	BLUETOOTH DETECTOR

NOTES:

1. NOT ALL COMPONENTS FOR TRAFFIC SIGNAL OPERATIONS ARE SHOWN. REFER TO TRAFFIC SIGNAL PLANS AND INTERCONNECT SHEETS FOR ADDITIONAL INFORMATION.

ITS-29

PARSONS

DESIGNED - YJ	REVISED -	
DRAWN - MT	REVISED -	
CHECKED - RCB/KA	REVISED -	
DATE - 11-22-2024	REVISED -	

STATE OF ILLINOIS
DEPARTMENT OF TRANSPORTATION

COMMUNICATIONS SINGLE LINE DIAGRAM
CERMAK RD AT CENTRAL AVENUE AND 54TH AVENUE

N.T.S. | SHEET OF SHEETS | STA. TO STA.

F.A.P. RTE.	SECTION	COUNTY	TOTAL SHEETS	SHEET NO.
365	20-265-SUR, SW & TS	DUPAGE/COOK	492	368
		CONTRACT NO. 62N39		
	ILLINOIS	FED. AID PROJECT		

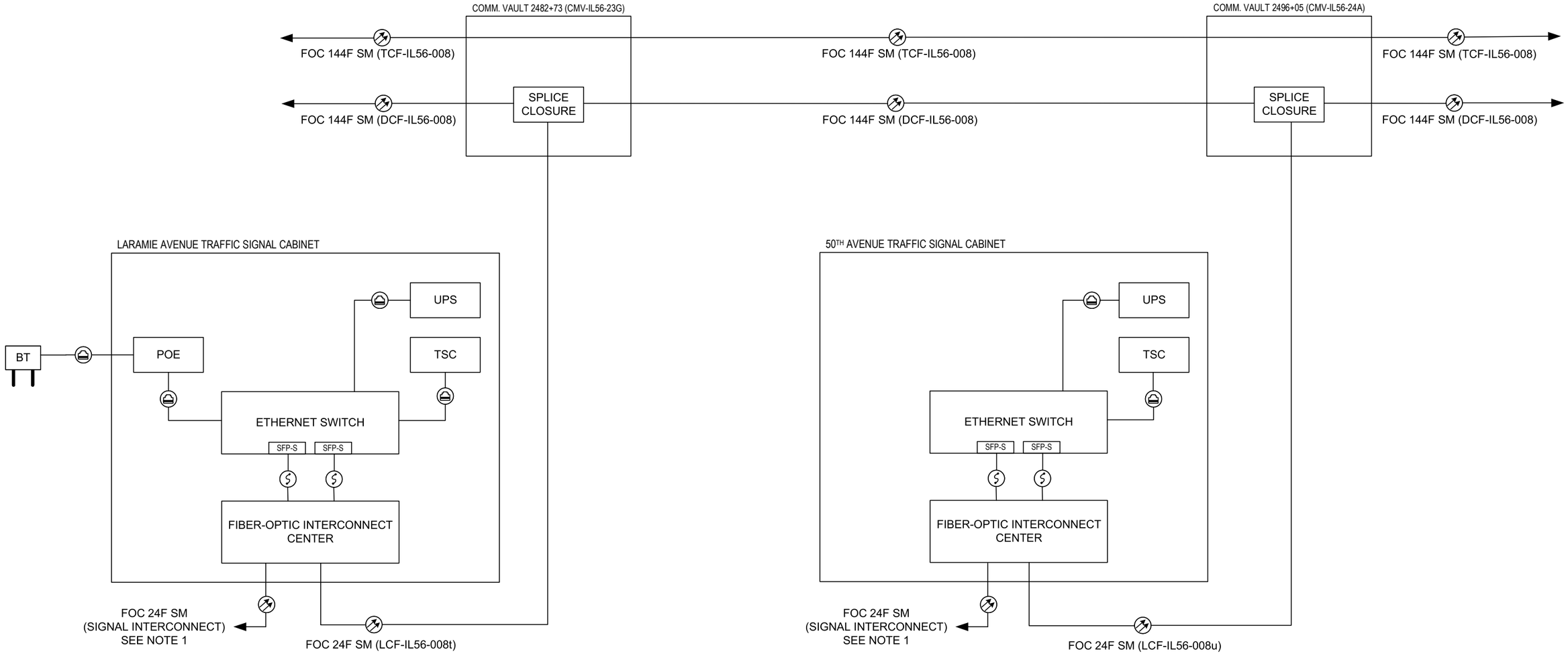

LEGEND

PROPOSED

- FIBER OPTIC CABLE (FOC)
- CAT 6 CABLE
- FIBER OPTIC PATCH CABLE, DUPLEX
- SFP-S — FIBER OPTIC TRANSCEIVER – SINGLE MODE
- DMS — DYNAMIC MESSAGE SIGN (DMS)
- CNTRL — DMS CONTROLLER
- TSC — TRAFFIC SIGNAL CONTROLLER
- PTZ — CCTV CAMERA, PAN-TILT-ZOOM
- RPR — REMOTE POWER RELAY
- UPS — UNINTERRUPTIBLE POWER SUPPLY
- POE — POWER OVER ETHERNET INJECTOR
- BT — BLUETOOTH DETECTOR

NOTES:

1. NOT ALL COMPONENTS FOR TRAFFIC SIGNAL OPERATIONS ARE SHOWN. REFER TO TRAFFIC SIGNAL PLANS AND INTERCONNECT SHEETS FOR ADDITIONAL INFORMATION.

ITS-30

PARSONS

DESIGNED - YJ	REVISED -	
DRAWN - MT	REVISED -	
CHECKED - RCB/KA	REVISED -	
DATE - 11-22-2024	REVISED -	

STATE OF ILLINOIS
DEPARTMENT OF TRANSPORTATION

COMMUNICATIONS SINGLE LINE DIAGRAM
CERMAK RD AT LARAMIE AVENUE AND 50TH AVENUE

N.T.S. | SHEET OF SHEETS | STA. TO STA.

F.A.P. RTE.	SECTION	COUNTY	TOTAL SHEETS	SHEET NO.
365	20-265-SUR, SW & TS	DUPAGE/COOK	492	369

CONTRACT NO. 62N39

ILLINOIS | FED. AID PROJECT

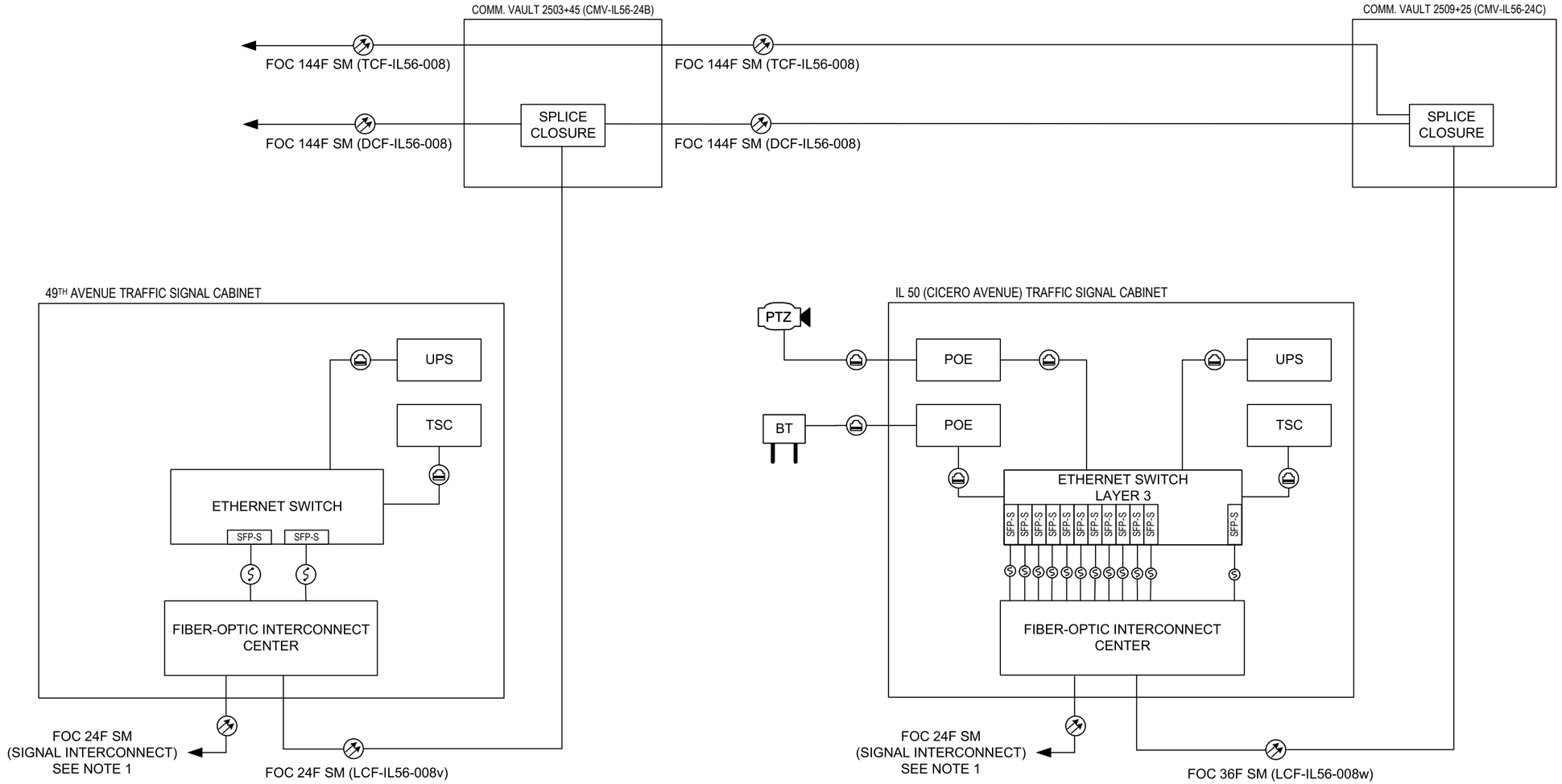

LEGEND

PROPOSED

	FIBER OPTIC CABLE (FOC)
	CAT 6 CABLE
	FIBER OPTIC PATCH CABLE, DUPLEX
SFP-S	FIBER OPTIC TRANSCEIVER – SINGLE MODE
DMS	DYNAMIC MESSAGE SIGN (DMS)
CNTRL	DMS CONTROLLER
TSC	TRAFFIC SIGNAL CONTROLLER
PTZ	CCTV CAMERA, PAN-TILT-ZOOM
RPR	REMOTE POWER RELAY
UPS	UNINTERRUPTIBLE POWER SUPPLY
POE	POWER OVER ETHERNET INJECTOR
BT	BLUETOOTH DETECTOR

NOTES:

1. NOT ALL COMPONENTS FOR TRAFFIC SIGNAL OPERATIONS ARE SHOWN. REFER TO TRAFFIC SIGNAL PLANS AND INTERCONNECT SHEETS FOR ADDITIONAL INFORMATION.

ITS-31

PARSONS

DESIGNED - YJ	REVISED -	
DRAWN - MT	REVISED -	
CHECKED - RCB/KA	REVISED -	
DATE - 11-22-2024	REVISED -	

STATE OF ILLINOIS
DEPARTMENT OF TRANSPORTATION

COMMUNICATIONS SINGLE LINE DIAGRAM
CERMAK RD AT 49TH AVENUE AND IL 50 (CICERO AVENUE)

N.T.S. | SHEET OF SHEETS | STA. TO STA.

F.A.P. RTE.	SECTION	COUNTY	TOTAL SHEETS	SHEET NO.
365	20-265-SUR, SW & TS	DUPAGE/COOK	492	370

CONTRACT NO. 62N39

ILLINOIS | FED. AID PROJECT

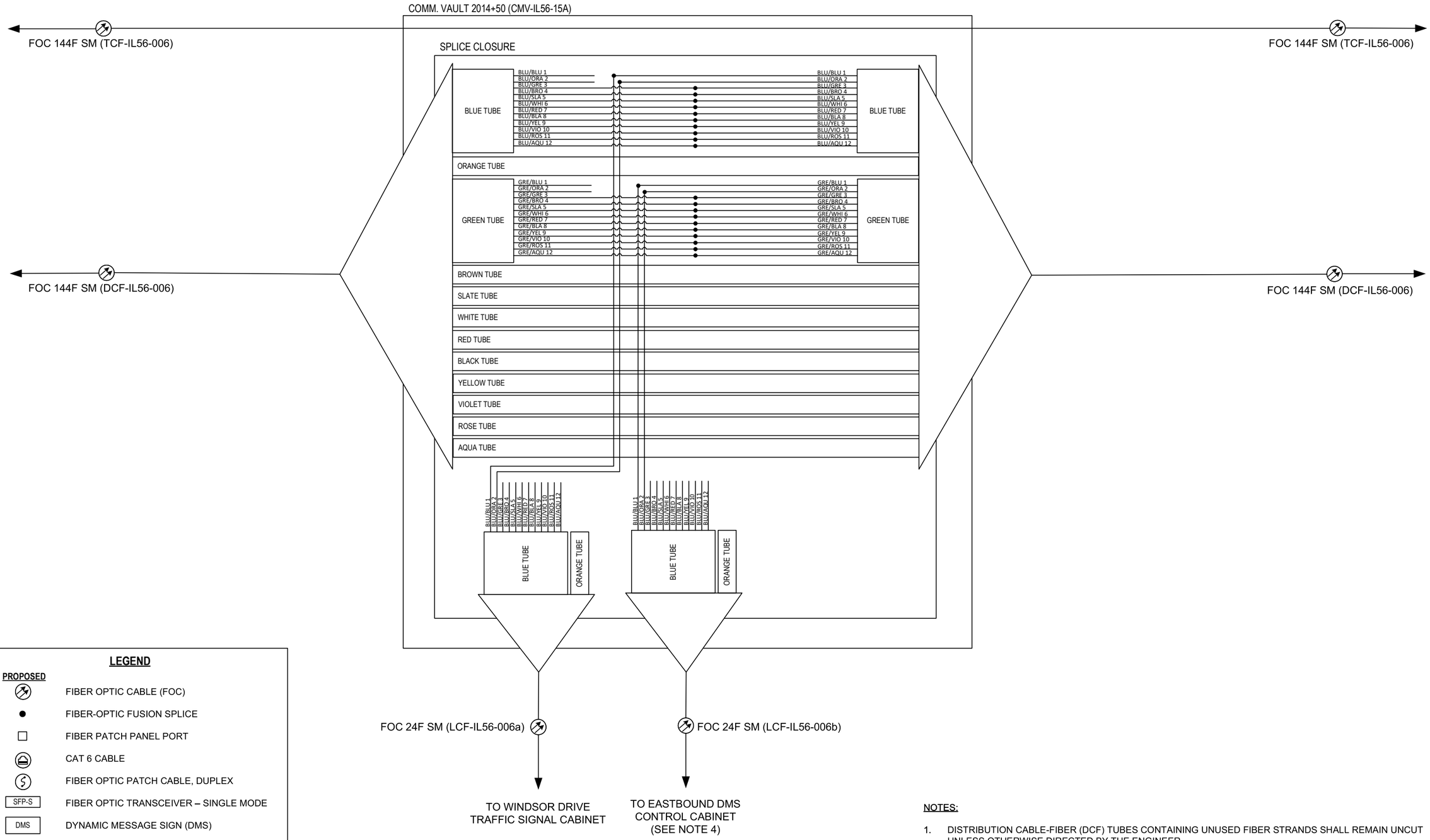

LEGEND

PROPOSED

- FIBER OPTIC CABLE (FOC)
- FIBER-OPTIC FUSION SPLICE
- FIBER PATCH PANEL PORT
- CAT 6 CABLE
- FIBER OPTIC PATCH CABLE, DUPLEX
- SFP-S — FIBER OPTIC TRANSCEIVER – SINGLE MODE
- DMS — DYNAMIC MESSAGE SIGN (DMS)
- CNTRL — DMS CONTROLLER
- PTZ — CCTV CAMERA, PAN-TILT-ZOOM
- RPR — REMOTE POWER RELAY
- UPS — UNINTERRUPTIBLE POWER SUPPLY

NOTES:

1. DISTRIBUTION CABLE-FIBER (DCF) TUBES CONTAINING UNUSED FIBER STRANDS SHALL REMAIN UNCUT UNLESS OTHERWISE DIRECTED BY THE ENGINEER.
2. TRUNK CABLE-FIBER (TCF) SHALL HAVE SLACK STORED WITHIN THE SPLICE COMMUNICATIONS VAULT AND SHALL PASS THROUGH UNCUT.
3. UNSPLICED FIBER STRANDS SHALL BE COILED WITHIN SPLICE CLOSURE.
4. SEE CORRESPONDING DMS FIBER SPLICING DIAGRAM FOR MORE INFORMATION.

ITS-32

PARSONS	DESIGNED - YJ	REVISED -	STATE OF ILLINOIS DEPARTMENT OF TRANSPORTATION
	DRAWN - MT	REVISED -	
	CHECKED - RCB/KA	REVISED -	
	DATE - 11-22-2024	REVISED -	

TRAFFIC SIGNAL FIBER SPLICING DIAGRAM (1 OF 2)
CERMAK RD / 22ND ST. AND WINDSOR DRIVE

N.T.S. | SHEET OF SHEETS | STA. TO STA.

F.A.P. RTE.	SECTION	COUNTY	TOTAL SHEETS	SHEET NO.
365	20-265-SUR, SW & TS	DUPAGE/COOK	492	371
		CONTRACT NO. 62N39		
		ILLINOIS	FED. AID PROJECT	

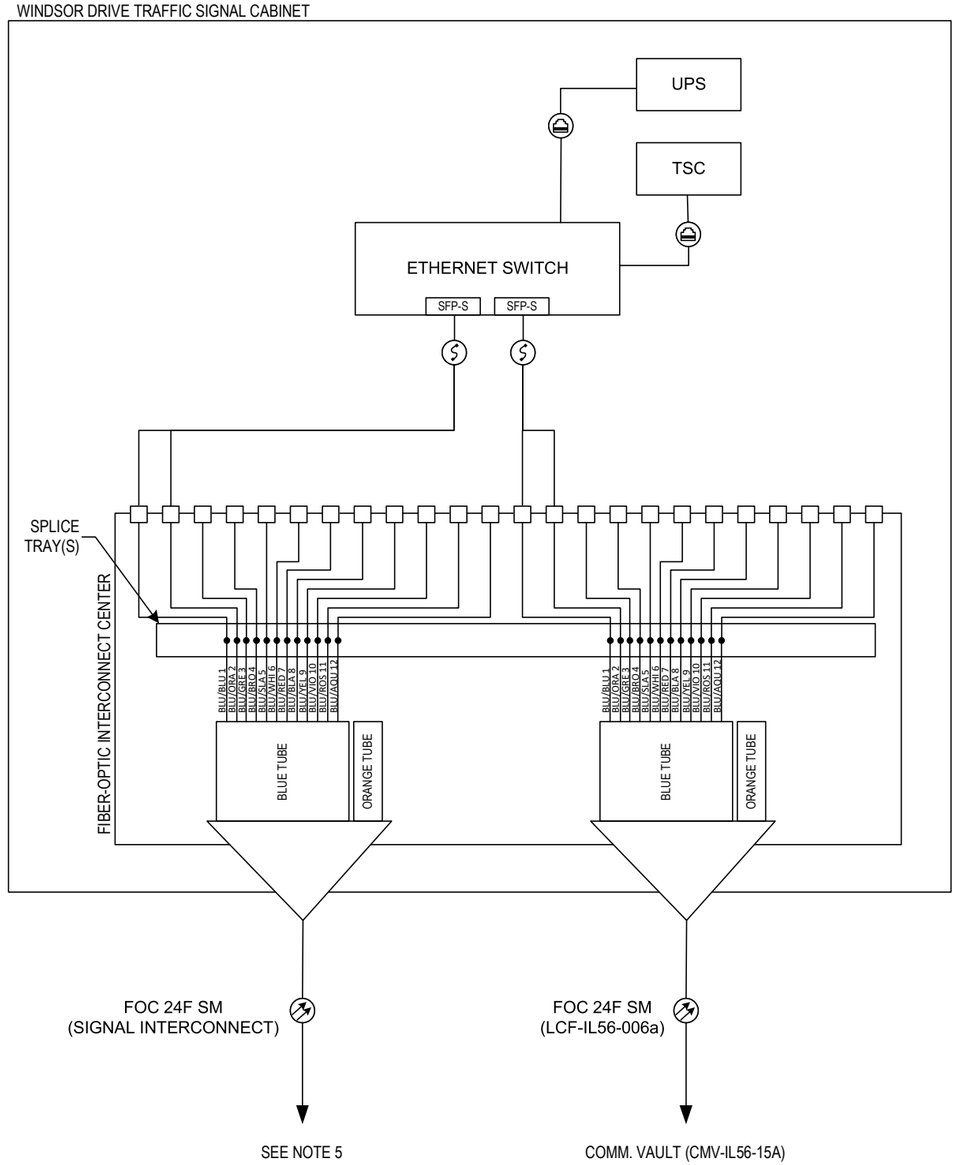

LEGEND

PROPOSED

- FIBER OPTIC CABLE (FOC)
- FIBER-OPTIC FUSION SPLICE
- FIBER PATCH PANEL PORT
- CAT 6 CABLE
- FIBER OPTIC PATCH CABLE, DUPLEX
- SFP-S — FIBER OPTIC TRANSCEIVER – SINGLE MODE
- BT — BLUETOOTH DETECTOR
- TSC — TRAFFIC SIGNAL CONTROLLER
- PTZ — CCTV CAMERA, PAN-TILT-ZOOM
- POE — POWER OVER ETHERNET INJECTOR
- UPS — UNINTERRUPTIBLE POWER SUPPLY

NOTES:

1. DISTRIBUTION CABLE-FIBER (DCF) TUBES CONTAINING UNUSED FIBER STRANDS SHALL REMAIN UNCUT UNLESS OTHERWISE DIRECTED BY THE ENGINEER.
2. TRUNK CABLE-FIBER (TCF) SHALL HAVE SLACK STORED WITHIN THE SPLICE COMMUNICATIONS VAULT AND SHALL PASS THROUGH UNCUT.
3. UNSPLICED FIBER STRANDS SHALL BE COILED WITHIN SPLICE TRAY.
4. FIBER-OPTIC CABLE DEPICTED IS GUIDANCE ONLY. ACTUAL FIBER-OPTIC CABLE FROM DMS CONTROLLER TO DMS DISPLAY SHALL BE IN ACCORDANCE WITH THE DMS MANUFACTURER'S REQUIREMENTS.
5. REFER TO TRAFFIC SIGNAL PLANS AND INTERCONNECT SHEETS FOR ADDITIONAL INFORMATION.

ITS-33

PARSONS

DESIGNED - YJ	REVISED -	
DRAWN - MT	REVISED -	
CHECKED - RCB/KA	REVISED -	
DATE - 11-22-2024	REVISED -	

STATE OF ILLINOIS
DEPARTMENT OF TRANSPORTATION

TRAFFIC SIGNAL FIBER SPLICING DIAGRAM (2 OF 2)
CERMAK RD / 22ND ST. AND WINDSOR DRIVE

N.T.S. | SHEET OF SHEETS | STA. TO STA.

F.A.P. RTE.	SECTION	COUNTY	TOTAL SHEETS	SHEET NO.
365	20-265-SUR, SW & TS	DUPAGE/COOK	492	372
		CONTRACT NO. 62N39		
		ILLINOIS	FED. AID PROJECT	

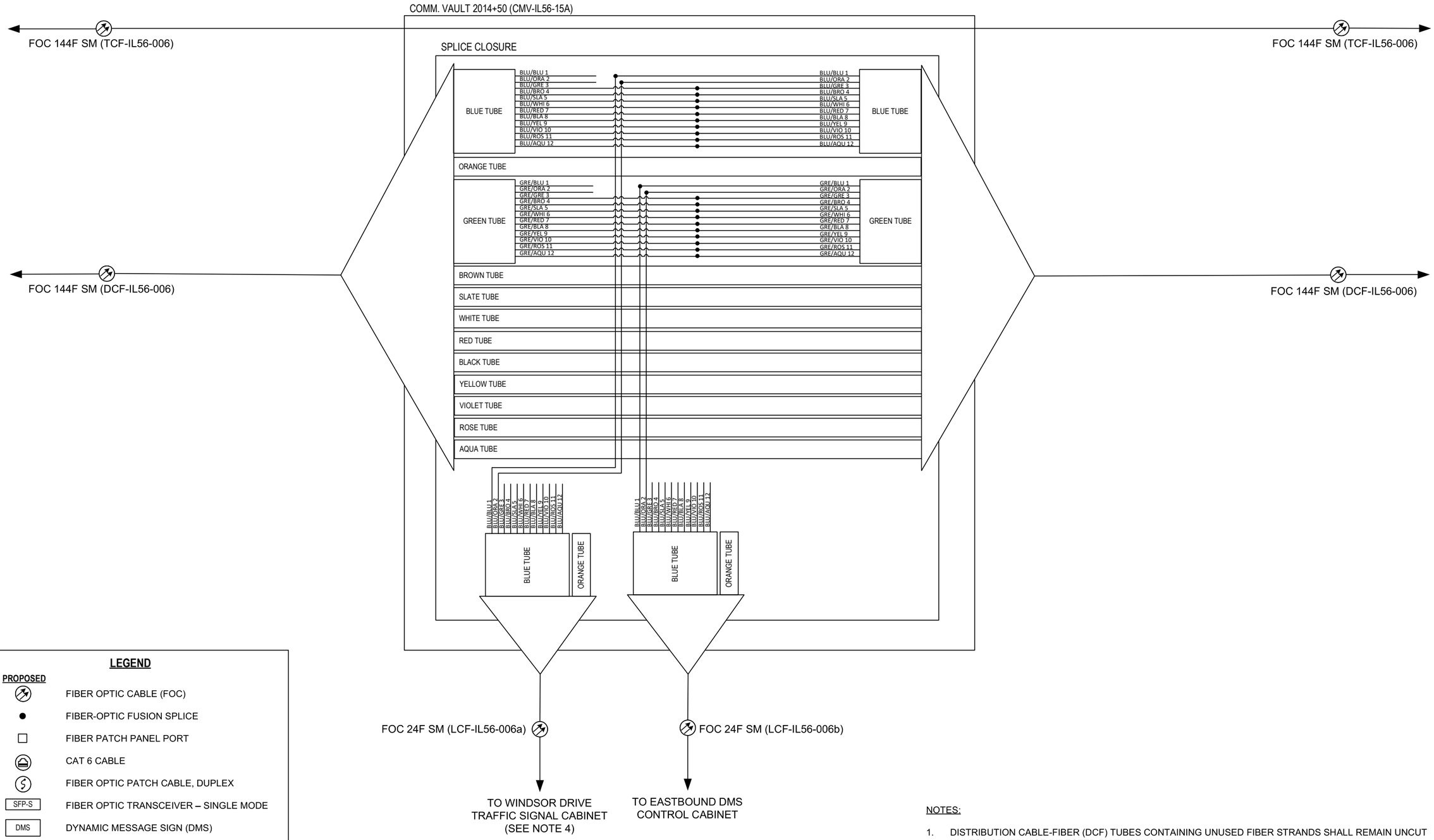

LEGEND

PROPOSED

- FIBER OPTIC CABLE (FOC)
- FIBER-OPTIC FUSION SPLICE
- FIBER PATCH PANEL PORT
- CAT 6 CABLE
- FIBER OPTIC PATCH CABLE, DUPLEX
- SFP-S — FIBER OPTIC TRANSCEIVER – SINGLE MODE
- DMS — DYNAMIC MESSAGE SIGN (DMS)
- CNTRL — DMS CONTROLLER
- PTZ — CCTV CAMERA, PAN-TILT-ZOOM
- RPR — REMOTE POWER RELAY
- UPS — UNINTERRUPTIBLE POWER SUPPLY

NOTES:

1. DISTRIBUTION CABLE-FIBER (DCF) TUBES CONTAINING UNUSED FIBER STRANDS SHALL REMAIN UNCUT UNLESS OTHERWISE DIRECTED BY THE ENGINEER.
2. TRUNK CABLE-FIBER (TCF) SHALL HAVE SLACK STORED WITHIN THE SPLICE COMMUNICATIONS VAULT AND SHALL PASS THROUGH UNCUT.
3. UNSPLICED FIBER STRANDS SHALL BE COILED WITHIN SPLICE CLOSURE.
4. SEE CORRESPONDING TRAFFIC SIGNAL FIBER SPLICING DIAGRAM FOR MORE INFORMATION.

ITS-34

PARSONS

DESIGNED - YJ	REVISED -	
DRAWN - MT	REVISED -	
CHECKED - RCB/KA	REVISED -	
DATE - 11-22-2024	REVISED -	

STATE OF ILLINOIS
DEPARTMENT OF TRANSPORTATION

DMS FIBER SPLICING DIAGRAM (1 OF 2)
22ND ST. / CERMAK RD.AT EASTBOUND DMS

N.T.S. | SHEET OF SHEETS | STA. TO STA.

F.A.P. RTE.	SECTION	COUNTY	TOTAL SHEETS	SHEET NO.
365	20-265-SUR, SW & TS	DUPAGE/COOK	492	373

CONTRACT NO. 62N39

ILLINOIS | FED. AID PROJECT

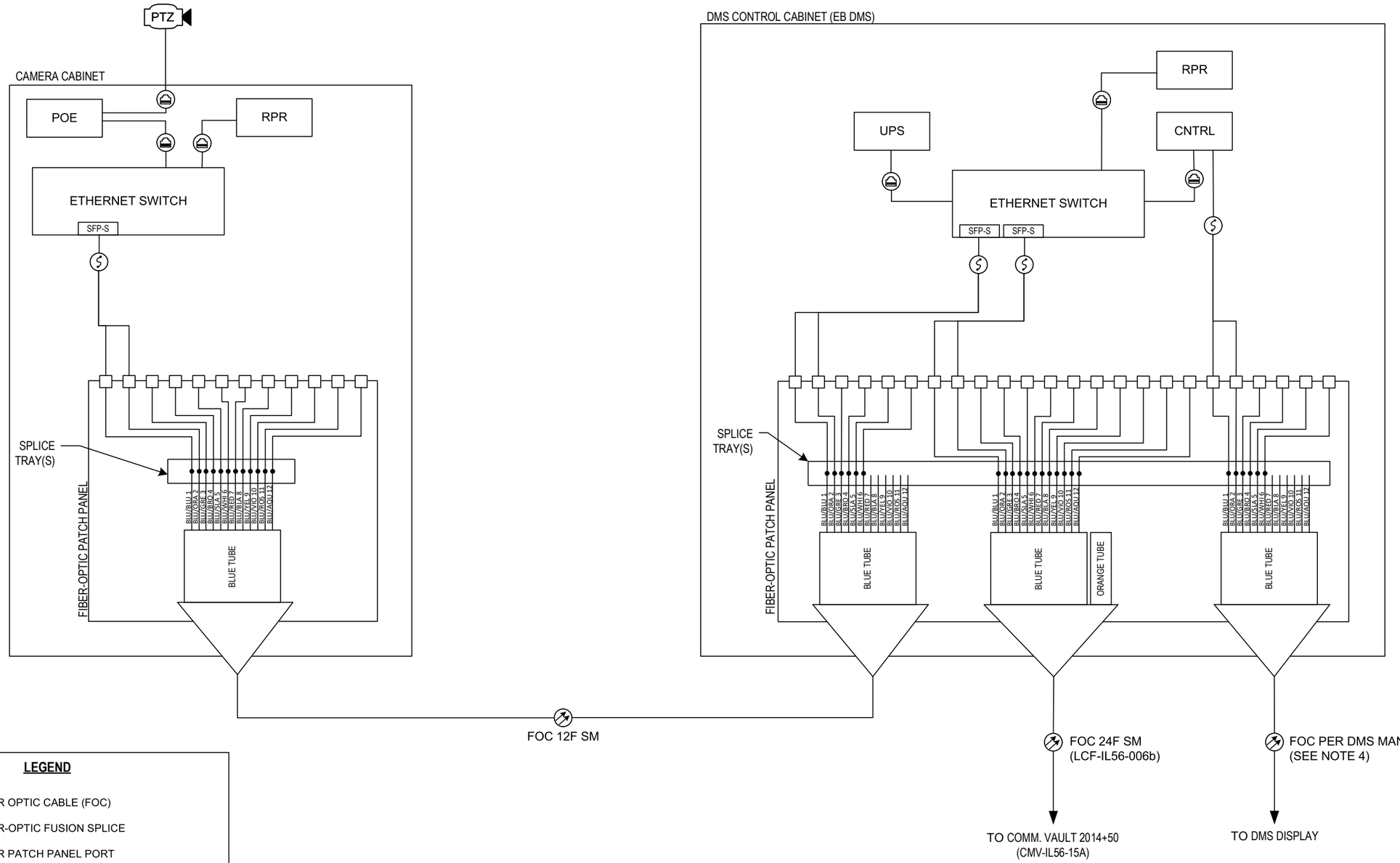

LEGEND

PROPOSED

- FIBER OPTIC CABLE (FOC)
- FIBER-OPTIC FUSION SPLICE
- FIBER PATCH PANEL PORT
- CAT 6 CABLE
- FIBER OPTIC PATCH CABLE, DUPLEX
- SFP-S — FIBER OPTIC TRANSCEIVER – SINGLE MODE
- DMS — DYNAMIC MESSAGE SIGN (DMS)
- CNTRL — DMS CONTROLLER
- PTZ — CCTV CAMERA, PAN-TILT-ZOOM
- RPR — REMOTE POWER RELAY
- UPS — UNINTERRUPTIBLE POWER SUPPLY

NOTES:

1. DISTRIBUTION CABLE-FIBER (DCF) TUBES CONTAINING UNUSED FIBER STRANDS SHALL REMAIN UNCUT UNLESS OTHERWISE DIRECTED BY THE ENGINEER.
2. TRUNK CABLE-FIBER (TCF) SHALL HAVE SLACK STORED WITHIN THE SPLICE COMMUNICATIONS VAULT AND SHALL PASS THROUGH UNCUT.
3. UNSPLICED FIBER STRANDS SHALL BE COILED WITHIN SPLICE TRAY.
4. FIBER-OPTIC CABLE DEPICTED IS GUIDANCE ONLY. ACTUAL FIBER-OPTIC CABLE FROM DMS CONTROLLER TO DMS DISPLAY SHALL BE IN ACCORDANCE WITH THE DMS MANUFACTURER'S REQUIREMENTS.

ITS-35

PARSONS

DESIGNED - YJ	REVISED -	STATE OF ILLINOIS DEPARTMENT OF TRANSPORTATION	DMS FIBER SPLICING DIAGRAM (2 OF 2) 22ND ST. / CERMAK RD. AT EASTBOUND DMS
DRAWN - MT	REVISED -		
CHECKED - RCB/KA	REVISED -		
DATE - 11-22-2024	REVISED -		N.T.S. SHEET OF SHEETS STA. TO STA.

F.A.P. RTE.	SECTION	COUNTY	TOTAL SHEETS	SHEET NO.
365	20-265-SUR, SW & TS	DUPAGE/COOK	492	374
		CONTRACT NO. 62N39		
		ILLINOIS	FED. AID PROJECT	

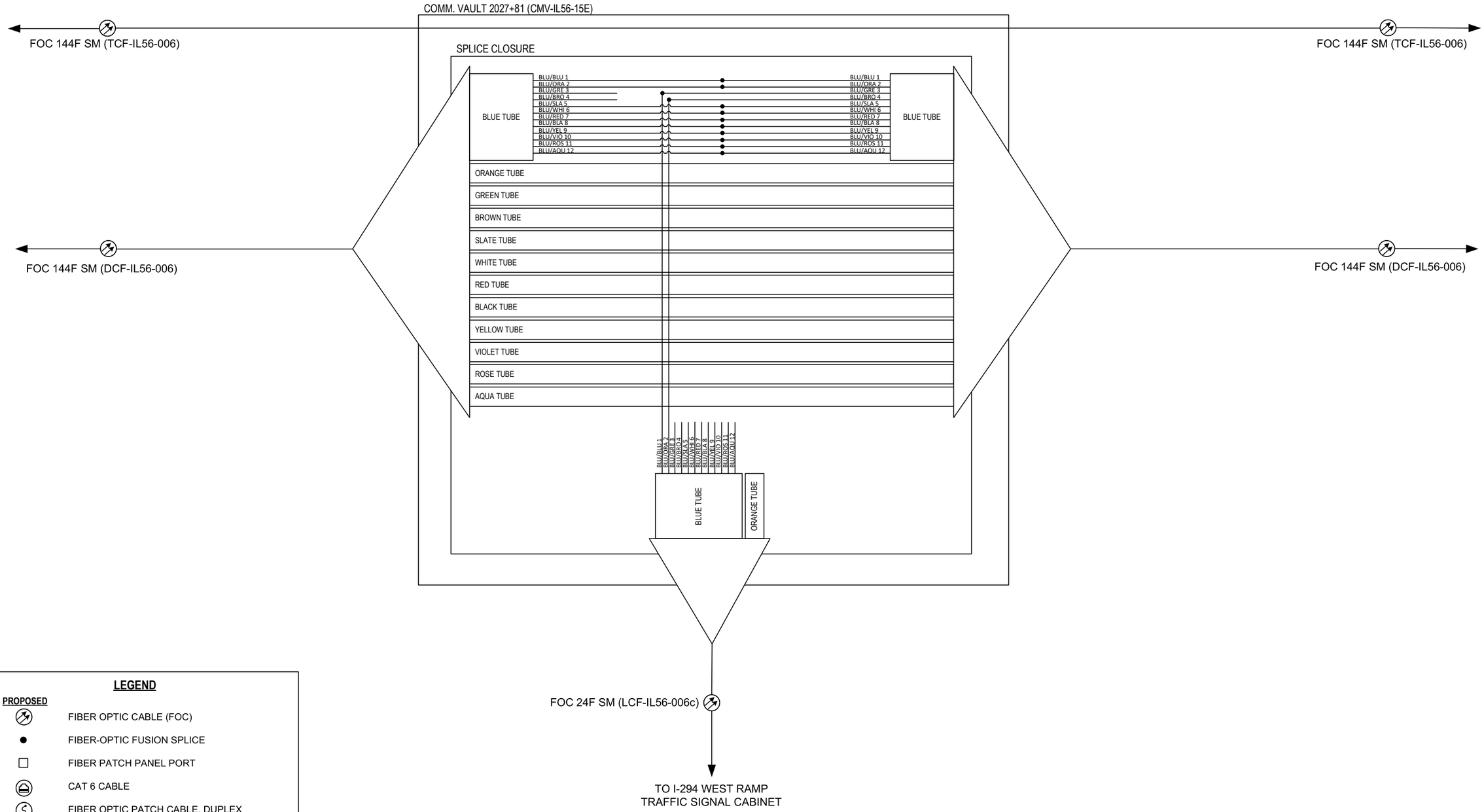

LEGEND

PROPOSED

- FIBER OPTIC CABLE (FOC)
- FIBER-OPTIC FUSION SPLICE
- FIBER PATCH PANEL PORT
- CAT 6 CABLE
- FIBER OPTIC PATCH CABLE, DUPLEX
- SFP-S — FIBER OPTIC TRANSCEIVER – SINGLE MODE
- DMS — DYNAMIC MESSAGE SIGN (DMS)
- CNTRL — DMS CONTROLLER
- PTZ — CCTV CAMERA, PAN-TILT-ZOOM
- RPR — REMOTE POWER RELAY
- UPS — UNINTERRUPTIBLE POWER SUPPLY

NOTES:

1. DISTRIBUTION CABLE-FIBER (DCF) TUBES CONTAINING UNUSED FIBER STRANDS SHALL REMAIN UNCUT UNLESS OTHERWISE DIRECTED BY THE ENGINEER.
2. TRUNK CABLE-FIBER (TCF) SHALL HAVE SLACK STORED WITHIN THE SPLICE COMMUNICATIONS VAULT AND SHALL PASS THROUGH UNCUT.
3. UNSPLICED FIBER STRANDS SHALL BE COILED WITHIN SPLICE CLOSURE.

ITS-36

PARSONS

DESIGNED - YJ	REVISED -	
DRAWN - MT	REVISED -	
CHECKED - RCB/KA	REVISED -	
DATE - 11-22-2024	REVISED -	

STATE OF ILLINOIS
DEPARTMENT OF TRANSPORTATION

TRAFFIC SIGNAL FIBER SPLICING DIAGRAM (1 OF 2)
CERMAK RD / 22ND ST. AND I-294 WEST RAMP

N.T.S. | SHEET OF SHEETS | STA. TO STA.

F.A.P. RTE.	SECTION	COUNTY	TOTAL SHEETS	SHEET NO.
365	20-265-SUR, SW & TS	DUPAGE/COOK	492	375
		CONTRACT NO. 62N39		
		ILLINOIS	FED. AID PROJECT	

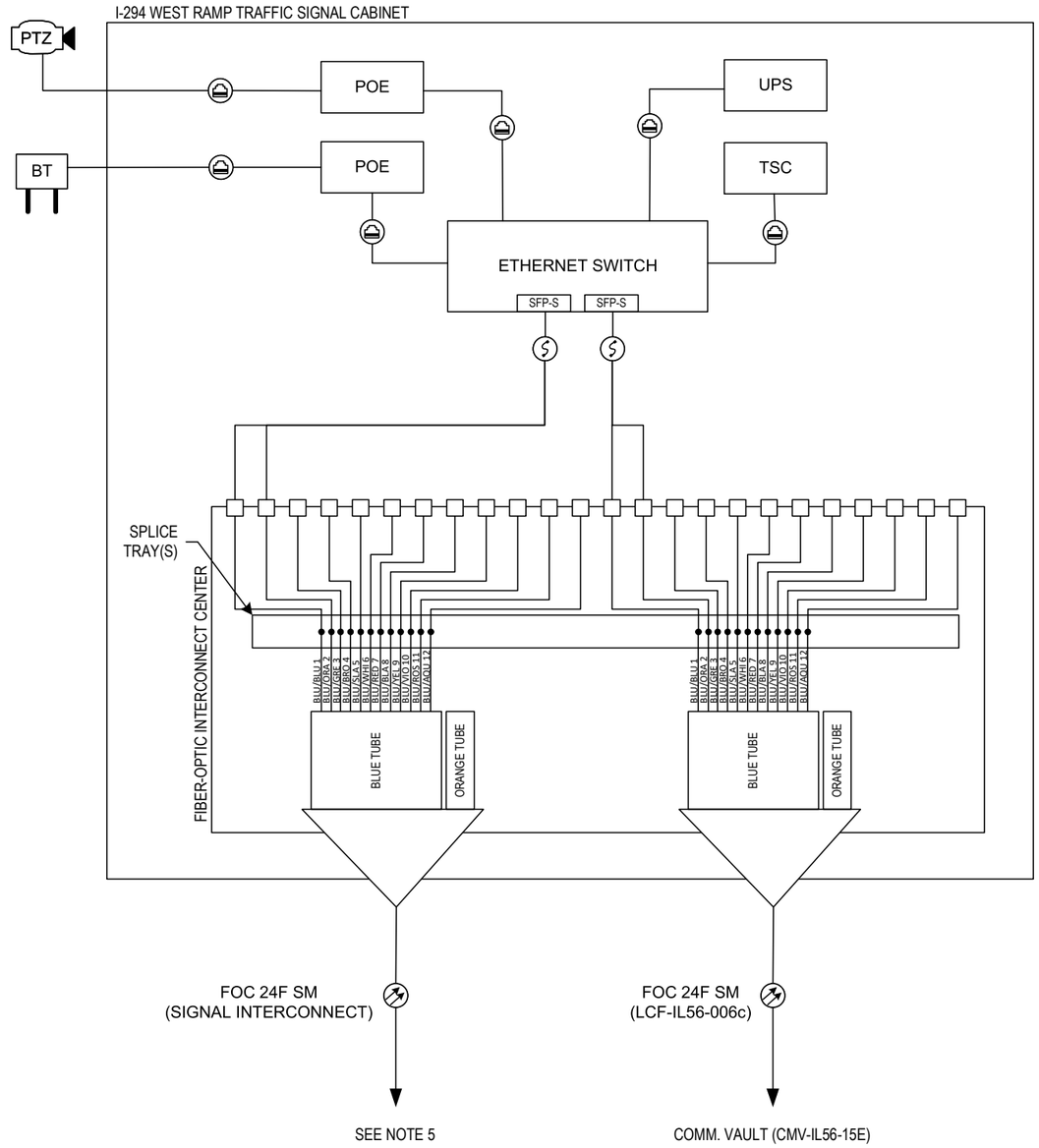

LEGEND

PROPOSED

- FIBER OPTIC CABLE (FOC)
- FIBER-OPTIC FUSION SPLICE
- FIBER PATCH PANEL PORT
- CAT 6 CABLE
- FIBER OPTIC PATCH CABLE, DUPLEX
- SFP-S — FIBER OPTIC TRANSCEIVER – SINGLE MODE
- BT — BLUETOOTH DETECTOR
- TSC — TRAFFIC SIGNAL CONTROLLER
- PTZ — CCTV CAMERA, PAN-TILT-ZOOM
- POE — POWER OVER ETHERNET INJECTOR
- UPS — UNINTERRUPTIBLE POWER SUPPLY

NOTES:

1. DISTRIBUTION CABLE-FIBER (DCF) TUBES CONTAINING UNUSED FIBER STRANDS SHALL REMAIN UNCUT UNLESS OTHERWISE DIRECTED BY THE ENGINEER.
2. TRUNK CABLE-FIBER (TCF) SHALL HAVE SLACK STORED WITHIN THE SPLICE COMMUNICATIONS VAULT AND SHALL PASS THROUGH UNCUT.
3. UNSPLICED FIBER STRANDS SHALL BE COILED WITHIN SPLICE TRAY.
4. FIBER-OPTIC CABLE DEPICTED IS GUIDANCE ONLY. ACTUAL FIBER-OPTIC CABLE FROM DMS CONTROLLER TO DMS DISPLAY SHALL BE IN ACCORDANCE WITH THE DMS MANUFACTURER'S REQUIREMENTS.
5. REFER TO TRAFFIC SIGNAL PLANS AND INTERCONNECT SHEETS FOR ADDITIONAL INFORMATION.

ITS-37

PARSONS

DESIGNED - YJ	REVISED -	STATE OF ILLINOIS DEPARTMENT OF TRANSPORTATION	TRAFFIC SIGNAL FIBER SPLICING DIAGRAM (2 OF 2) CERMAK RD / 22ND ST. AND I-294 WEST RAMP
DRAWN - MT	REVISED -		
CHECKED - RCB/KA	REVISED -		
DATE - 11-22-2024	REVISED -		N.T.S. SHEET OF SHEETS STA. TO STA.

F.A.P. RTE.	SECTION	COUNTY	TOTAL SHEETS	SHEET NO.
365	20-265-SUR, SW & TS	DUPAGE/COOK	492	376
		CONTRACT NO. 62N39		
		ILLINOIS	FED. AID PROJECT	

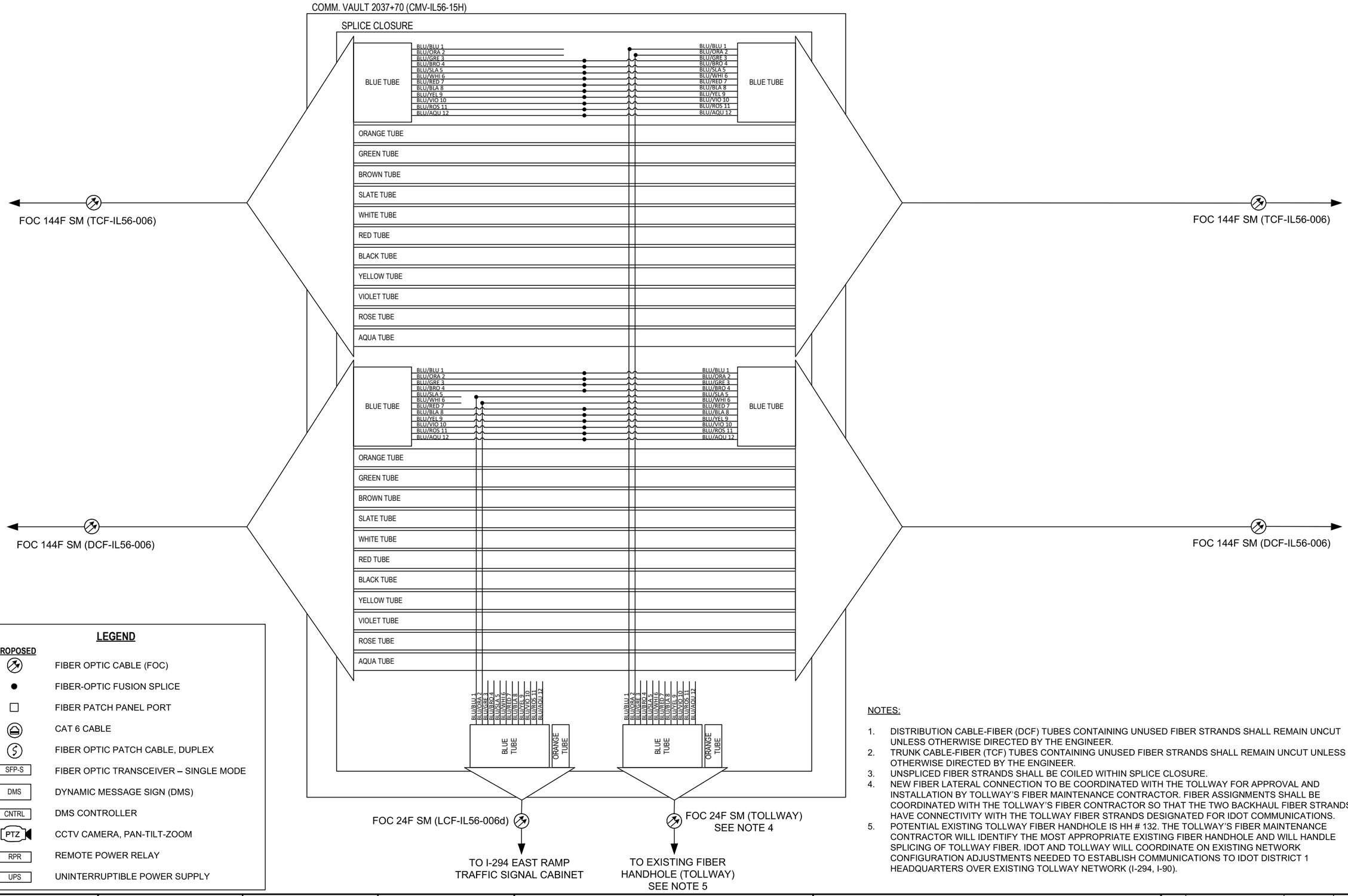

LEGEND

PROPOSED

- FIBER OPTIC CABLE (FOC)
- FIBER-OPTIC FUSION SPLICE
- FIBER PATCH PANEL PORT
- CAT 6 CABLE
- FIBER OPTIC PATCH CABLE, DUPLEX
- SFP-S — FIBER OPTIC TRANSCEIVER – SINGLE MODE
- DMS — DYNAMIC MESSAGE SIGN (DMS)
- CNTRL — DMS CONTROLLER
- PTZ — CCTV CAMERA, PAN-TILT-ZOOM
- RPR — REMOTE POWER RELAY
- UPS — UNINTERRUPTIBLE POWER SUPPLY

NOTES:

1. DISTRIBUTION CABLE-FIBER (DCF) TUBES CONTAINING UNUSED FIBER STRANDS SHALL REMAIN UNCUT UNLESS OTHERWISE DIRECTED BY THE ENGINEER.
2. TRUNK CABLE-FIBER (TCF) TUBES CONTAINING UNUSED FIBER STRANDS SHALL REMAIN UNCUT UNLESS OTHERWISE DIRECTED BY THE ENGINEER.
3. UNSPLICED FIBER STRANDS SHALL BE COILED WITHIN SPLICE CLOSURE.
4. NEW FIBER LATERAL CONNECTION TO BE COORDINATED WITH THE TOLLWAY FOR APPROVAL AND INSTALLATION BY TOLLWAY'S FIBER MAINTENANCE CONTRACTOR. FIBER ASSIGNMENTS SHALL BE COORDINATED WITH THE TOLLWAY'S FIBER CONTRACTOR SO THAT THE TWO BACKHAUL FIBER STRANDS HAVE CONNECTIVITY WITH THE TOLLWAY FIBER STRANDS DESIGNATED FOR IDOT COMMUNICATIONS.
5. POTENTIAL EXISTING TOLLWAY FIBER HANDHOLE IS HH # 132. THE TOLLWAY'S FIBER MAINTENANCE CONTRACTOR WILL IDENTIFY THE MOST APPROPRIATE EXISTING FIBER HANDHOLE AND WILL HANDLE SPLICING OF TOLLWAY FIBER. IDOT AND TOLLWAY WILL COORDINATE ON EXISTING NETWORK CONFIGURATION ADJUSTMENTS NEEDED TO ESTABLISH COMMUNICATIONS TO IDOT DISTRICT 1 HEADQUARTERS OVER EXISTING TOLLWAY NETWORK (I-294, I-90).

ITS-38

PARSONS

DESIGNED	- YJ	REVISED	-
DRAWN	- MT	REVISED	-
CHECKED	- RCB/KA	REVISED	-
DATE	- 11-22-2024	REVISED	-

STATE OF ILLINOIS
DEPARTMENT OF TRANSPORTATION

TRAFFIC SIGNAL FIBER SPLICING DIAGRAM (1 OF 2)
CERMAK RD / 22ND ST. AND I-294 EAST RAMP

N.T.S. | SHEET OF SHEETS | STA. TO STA.

F.A.P. RTE.	SECTION	COUNTY	TOTAL SHEETS	SHEET NO.
365	20-265-SUR, SW & TS	DUPAGE/COOK	492	377
		CONTRACT NO. 62N39		
		ILLINOIS	FED. AID PROJECT	

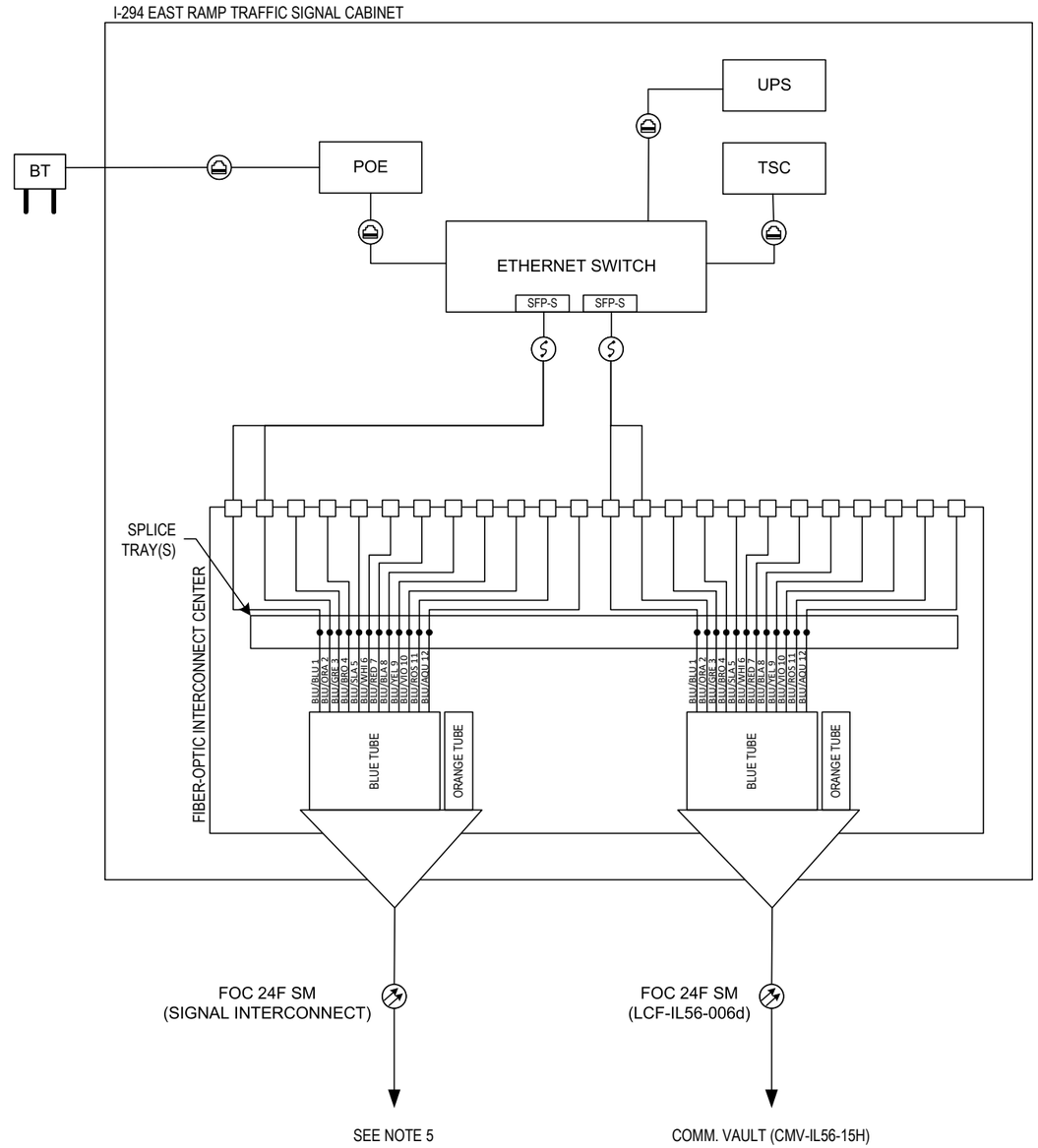

LEGEND

PROPOSED

- FIBER OPTIC CABLE (FOC)
- FIBER-OPTIC FUSION SPLICE
- FIBER PATCH PANEL PORT
- CAT 6 CABLE
- FIBER OPTIC PATCH CABLE, DUPLEX
- SFP-S — FIBER OPTIC TRANSCEIVER – SINGLE MODE
- BT — BLUETOOTH DETECTOR
- TSC — TRAFFIC SIGNAL CONTROLLER
- PTZ — CCTV CAMERA, PAN-TILT-ZOOM
- POE — POWER OVER ETHERNET INJECTOR
- UPS — UNINTERRUPTIBLE POWER SUPPLY

NOTES:

1. DISTRIBUTION CABLE-FIBER (DCF) TUBES CONTAINING UNUSED FIBER STRANDS SHALL REMAIN UNCUT UNLESS OTHERWISE DIRECTED BY THE ENGINEER.
2. TRUNK CABLE-FIBER (TCF) TUBES CONTAINING UNUSED FIBER STRANDS SHALL REMAIN UNCUT UNLESS OTHERWISE DIRECTED BY THE ENGINEER.
3. UNSPLICED FIBER STRANDS SHALL BE COILED WITHIN SPLICE TRAY.
4. FIBER-OPTIC CABLE DEPICTED IS GUIDANCE ONLY. ACTUAL FIBER-OPTIC CABLE FROM DMS CONTROLLER TO DMS DISPLAY SHALL BE IN ACCORDANCE WITH THE DMS MANUFACTURER'S REQUIREMENTS.
5. REFER TO TRAFFIC SIGNAL PLANS AND INTERCONNECT SHEETS FOR ADDITIONAL INFORMATION.

ITS-39

PARSONS

DESIGNED - YJ	REVISED -	STATE OF ILLINOIS DEPARTMENT OF TRANSPORTATION	TRAFFIC SIGNAL FIBER SPLICING DIAGRAM (2 OF 2) CERMAK RD / 22ND ST. AND I-294 EAST RAMP
DRAWN - MT	REVISED -		
CHECKED - RCB/KA	REVISED -		
DATE - 11-22-2024	REVISED -		N.T.S. SHEET OF SHEETS STA. TO STA.

F.A.P. RTE.	SECTION	COUNTY	TOTAL SHEETS	SHEET NO.
365	20-265-SUR, SW & TS	DUPAGE/COOK	492	378
		CONTRACT NO. 62N39		
		ILLINOIS	FED. AID PROJECT	

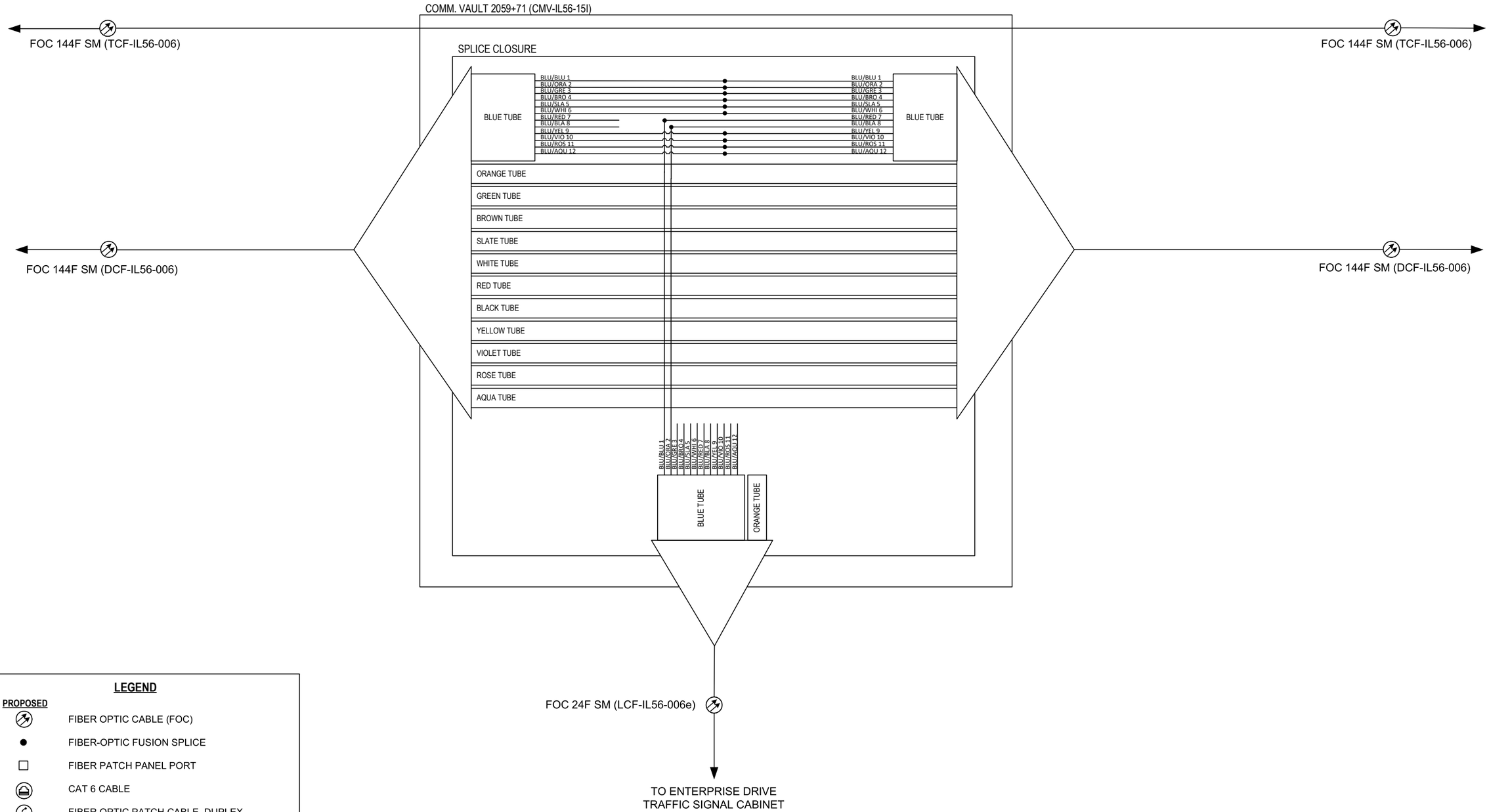

LEGEND

PROPOSED

- FIBER OPTIC CABLE (FOC)
- FIBER-OPTIC FUSION SPLICE
- FIBER PATCH PANEL PORT
- CAT 6 CABLE
- FIBER OPTIC PATCH CABLE, DUPLEX
- SFP-S — FIBER OPTIC TRANSCEIVER – SINGLE MODE
- DMS — DYNAMIC MESSAGE SIGN (DMS)
- CNTRL — DMS CONTROLLER
- PTZ — CCTV CAMERA, PAN-TILT-ZOOM
- RPR — REMOTE POWER RELAY
- UPS — UNINTERRUPTIBLE POWER SUPPLY

NOTES:

1. DISTRIBUTION CABLE-FIBER (DCF) TUBES CONTAINING UNUSED FIBER STRANDS SHALL REMAIN UNCUT UNLESS OTHERWISE DIRECTED BY THE ENGINEER.
2. TRUNK CABLE-FIBER (TCF) SHALL HAVE SLACK STORED WITHIN THE SPLICE COMMUNICATIONS VAULT AND SHALL PASS THROUGH UNCUT.
3. UNSPLICED FIBER STRANDS SHALL BE COILED WITHIN SPLICE CLOSURE.

ITS-40

PARSONS

DESIGNED - YJ	REVISED -	
DRAWN - MT	REVISED -	
CHECKED - RCB/KA	REVISED -	
DATE - 11-22-2024	REVISED -	

STATE OF ILLINOIS
DEPARTMENT OF TRANSPORTATION

TRAFFIC SIGNAL FIBER SPLICING DIAGRAM (1 OF 2)
CERMAK RD / 22ND ST. AND ENTERPRISE DRIVE

N.T.S. | SHEET OF SHEETS | STA. TO STA.

F.A.P. RTE.	SECTION	COUNTY	TOTAL SHEETS	SHEET NO.
365	20-265-SUR, SW & TS	DUPAGE/COOK	492	379
		CONTRACT NO. 62N39		
		ILLINOIS	FED. AID PROJECT	

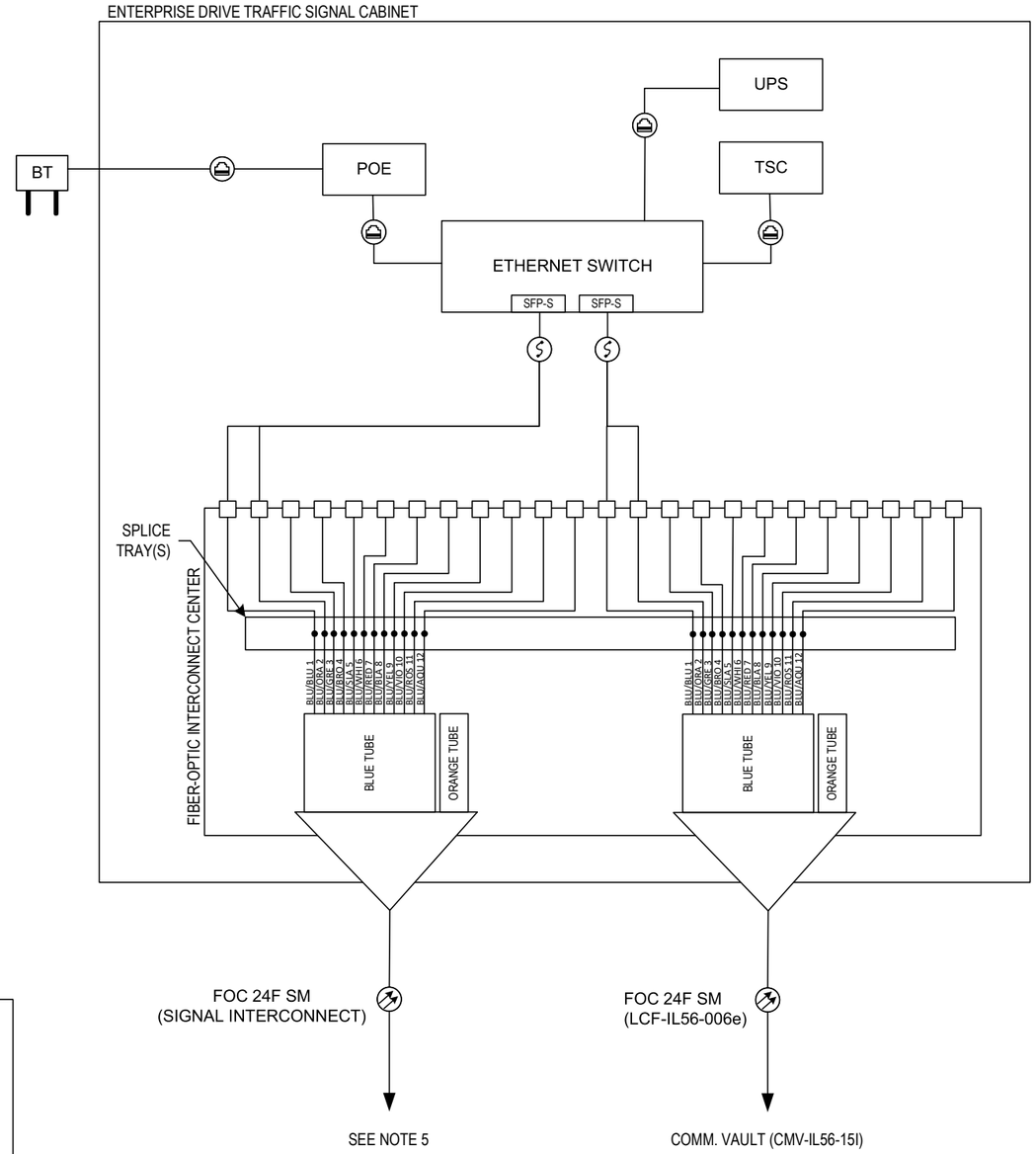

LEGEND

PROPOSED

- FIBER OPTIC CABLE (FOC)
- FIBER-OPTIC FUSION SPLICE
- FIBER PATCH PANEL PORT
- CAT 6 CABLE
- FIBER OPTIC PATCH CABLE, DUPLEX
- SFP-S — FIBER OPTIC TRANSCEIVER – SINGLE MODE
- BT — BLUETOOTH DETECTOR
- TSC — TRAFFIC SIGNAL CONTROLLER
- PTZ — CCTV CAMERA, PAN-TILT-ZOOM
- POE — POWER OVER ETHERNET INJECTOR
- UPS — UNINTERRUPTIBLE POWER SUPPLY

NOTES:

1. DISTRIBUTION CABLE-FIBER (DCF) TUBES CONTAINING UNUSED FIBER STRANDS SHALL REMAIN UNCUT UNLESS OTHERWISE DIRECTED BY THE ENGINEER.
2. TRUNK CABLE-FIBER (TCF) SHALL HAVE SLACK STORED WITHIN THE SPLICE COMMUNICATIONS VAULT AND SHALL PASS THROUGH UNCUT.
3. UNSPLICED FIBER STRANDS SHALL BE COILED WITHIN SPLICE TRAY.
4. FIBER-OPTIC CABLE DEPICTED IS GUIDANCE ONLY. ACTUAL FIBER-OPTIC CABLE FROM DMS CONTROLLER TO DMS DISPLAY SHALL BE IN ACCORDANCE WITH THE DMS MANUFACTURER'S REQUIREMENTS.
5. REFER TO TRAFFIC SIGNAL PLANS AND INTERCONNECT SHEETS FOR ADDITIONAL INFORMATION.

ITS-41

PARSONS

DESIGNED - YJ	REVISED -		
DRAWN - MT	REVISED -		
CHECKED - RCB/KA	REVISED -		
DATE - 11-22-2024	REVISED -		

STATE OF ILLINOIS
DEPARTMENT OF TRANSPORTATION

TRAFFIC SIGNAL FIBER SPLICING DIAGRAM (2 OF 2)
CERMAK RD / 22ND ST. AND ENTERPRISE DRIVE

N.T.S. | SHEET OF SHEETS | STA. TO STA.

F.A.P. RTE.	SECTION	COUNTY	TOTAL SHEETS	SHEET NO.
365	20-265-SUR, SW & TS	DUPAGE/COOK	492	380
		CONTRACT NO. 62N39		
		ILLINOIS	FED. AID PROJECT	

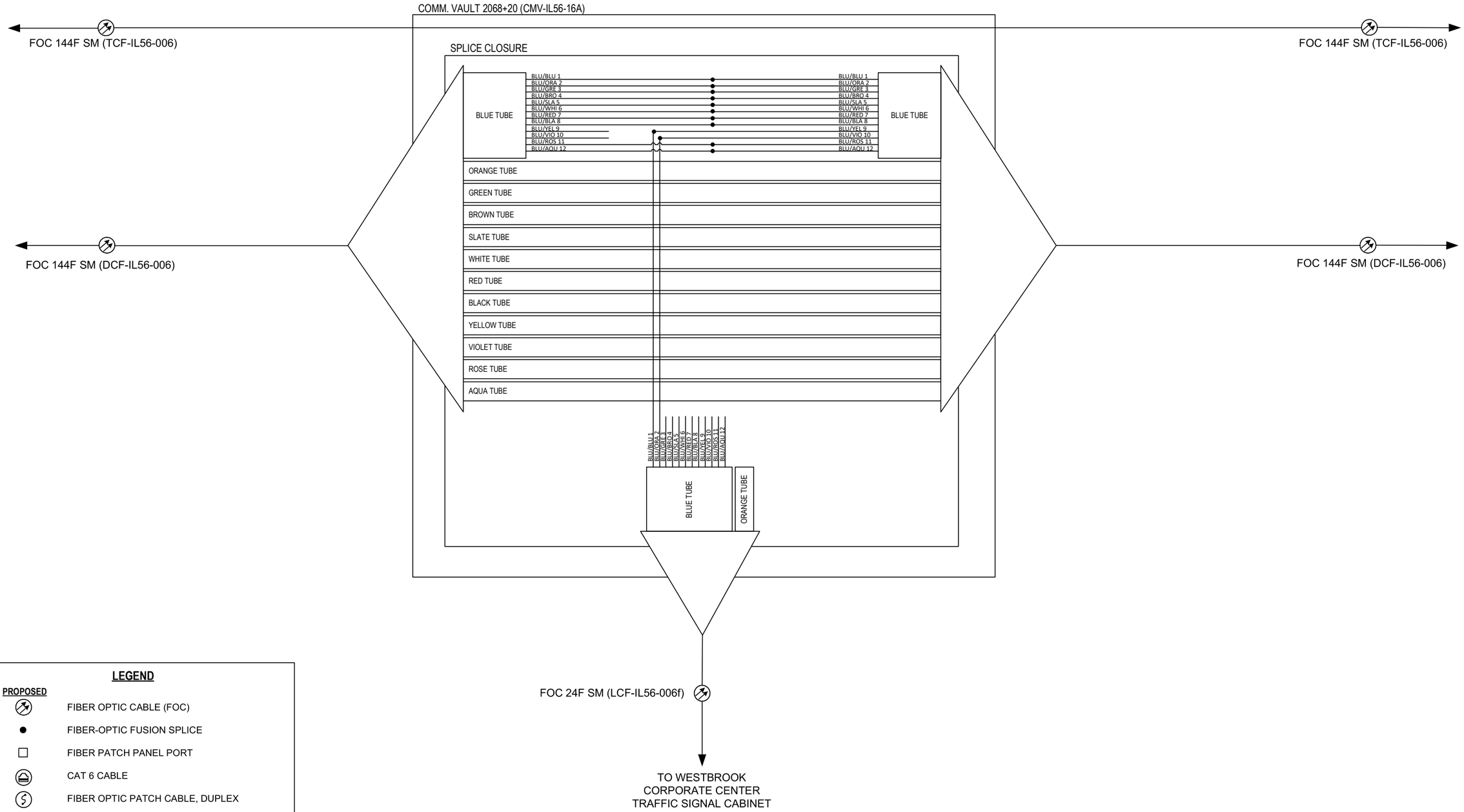

LEGEND

PROPOSED

- FIBER OPTIC CABLE (FOC)
- FIBER-OPTIC FUSION SPLICE
- FIBER PATCH PANEL PORT
- CAT 6 CABLE
- FIBER OPTIC PATCH CABLE, DUPLEX
- SFP-S — FIBER OPTIC TRANSCEIVER – SINGLE MODE
- DMS — DYNAMIC MESSAGE SIGN (DMS)
- CNTRL — DMS CONTROLLER
- PTZ — CCTV CAMERA, PAN-TILT-ZOOM
- RPR — REMOTE POWER RELAY
- UPS — UNINTERRUPTIBLE POWER SUPPLY

NOTES:

1. DISTRIBUTION CABLE-FIBER (DCF) TUBES CONTAINING UNUSED FIBER STRANDS SHALL REMAIN UNCUT UNLESS OTHERWISE DIRECTED BY THE ENGINEER.
2. TRUNK CABLE-FIBER (TCF) SHALL HAVE SLACK STORED WITHIN THE SPLICE COMMUNICATIONS VAULT AND SHALL PASS THROUGH UNCUT.
3. UNSPLICED FIBER STRANDS SHALL BE COILED WITHIN SPLICE CLOSURE.

ITS-42

PARSONS

DESIGNED - YJ	REVISED -	
DRAWN - MT	REVISED -	
CHECKED - RCB/KA	REVISED -	
DATE - 11-22-2024	REVISED -	

STATE OF ILLINOIS
DEPARTMENT OF TRANSPORTATION

TRAFFIC SIGNAL FIBER SPLICING DIAGRAM (1 OF 2)
CERMAK RD / 22ND ST. AND WESTBROOK CORPORATE CENTER

N.T.S. | SHEET OF SHEETS | STA. TO STA.

F.A.P. RTE.	SECTION	COUNTY	TOTAL SHEETS	SHEET NO.
365	20-265-SUR, SW & TS	DUPAGE/COOK	492	381
		CONTRACT NO. 62N39		
		ILLINOIS	FED. AID PROJECT	

WESTBROOK CORPORATE CENTER TRAFFIC SIGNAL CABINET

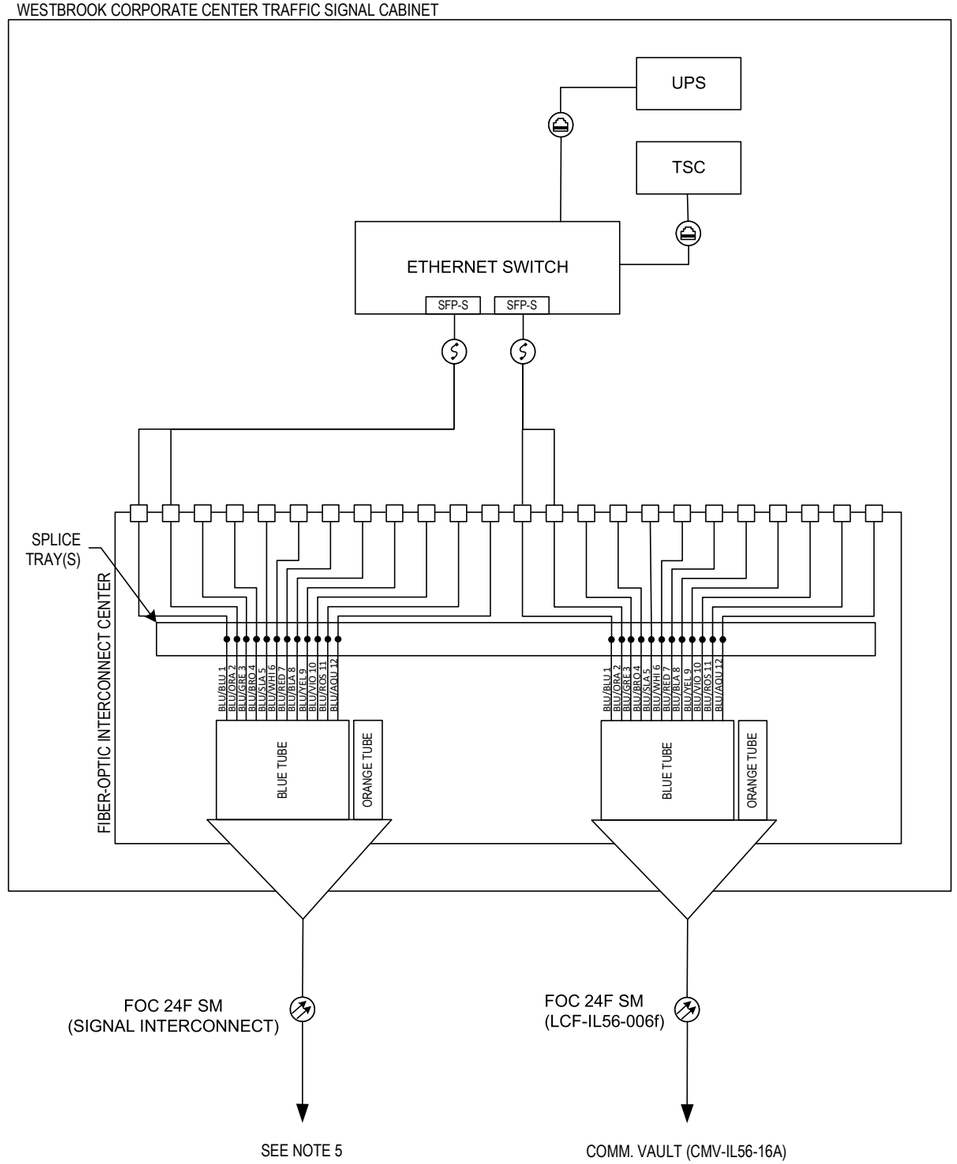

LEGEND

PROPOSED

- FIBER OPTIC CABLE (FOC)
- FIBER-OPTIC FUSION SPLICE
- FIBER PATCH PANEL PORT
- CAT 6 CABLE
- FIBER OPTIC PATCH CABLE, DUPLEX
- SFP-S — FIBER OPTIC TRANSCEIVER – SINGLE MODE
- BT — BLUETOOTH DETECTOR
- TSC — TRAFFIC SIGNAL CONTROLLER
- PTZ — CCTV CAMERA, PAN-TILT-ZOOM
- POE — POWER OVER ETHERNET INJECTOR
- UPS — UNINTERRUPTIBLE POWER SUPPLY

NOTES:

1. DISTRIBUTION CABLE-FIBER (DCF) TUBES CONTAINING UNUSED FIBER STRANDS SHALL REMAIN UNCUT UNLESS OTHERWISE DIRECTED BY THE ENGINEER.
2. TRUNK CABLE-FIBER (TCF) SHALL HAVE SLACK STORED WITHIN THE SPLICE COMMUNICATIONS VAULT AND SHALL PASS THROUGH UNCUT.
3. UNSPLICED FIBER STRANDS SHALL BE COILED WITHIN SPLICE TRAY.
4. FIBER-OPTIC CABLE DEPICTED IS GUIDANCE ONLY. ACTUAL FIBER-OPTIC CABLE FROM DMS CONTROLLER TO DMS DISPLAY SHALL BE IN ACCORDANCE WITH THE DMS MANUFACTURER'S REQUIREMENTS.
5. REFER TO TRAFFIC SIGNAL PLANS AND INTERCONNECT SHEETS FOR ADDITIONAL INFORMATION.

ITS-43

PARSONS

DESIGNED - YJ	REVISED -	
DRAWN - MT	REVISED -	
CHECKED - RCB/KA	REVISED -	
DATE - 11-22-2024	REVISED -	

STATE OF ILLINOIS
DEPARTMENT OF TRANSPORTATION

TRAFFIC SIGNAL FIBER SPLICING DIAGRAM (2 OF 2)
CERMAK RD / 22ND ST. AND WESTBROOK CORPORATE CENTER

N.T.S. | SHEET OF SHEETS | STA. TO STA.

F.A.P. RTE.	SECTION	COUNTY	TOTAL SHEETS	SHEET NO.
365	20-265-SUR, SW & TS	DUPAGE/COOK	492	382
		CONTRACT NO. 62N39		
		ILLINOIS	FED. AID PROJECT	

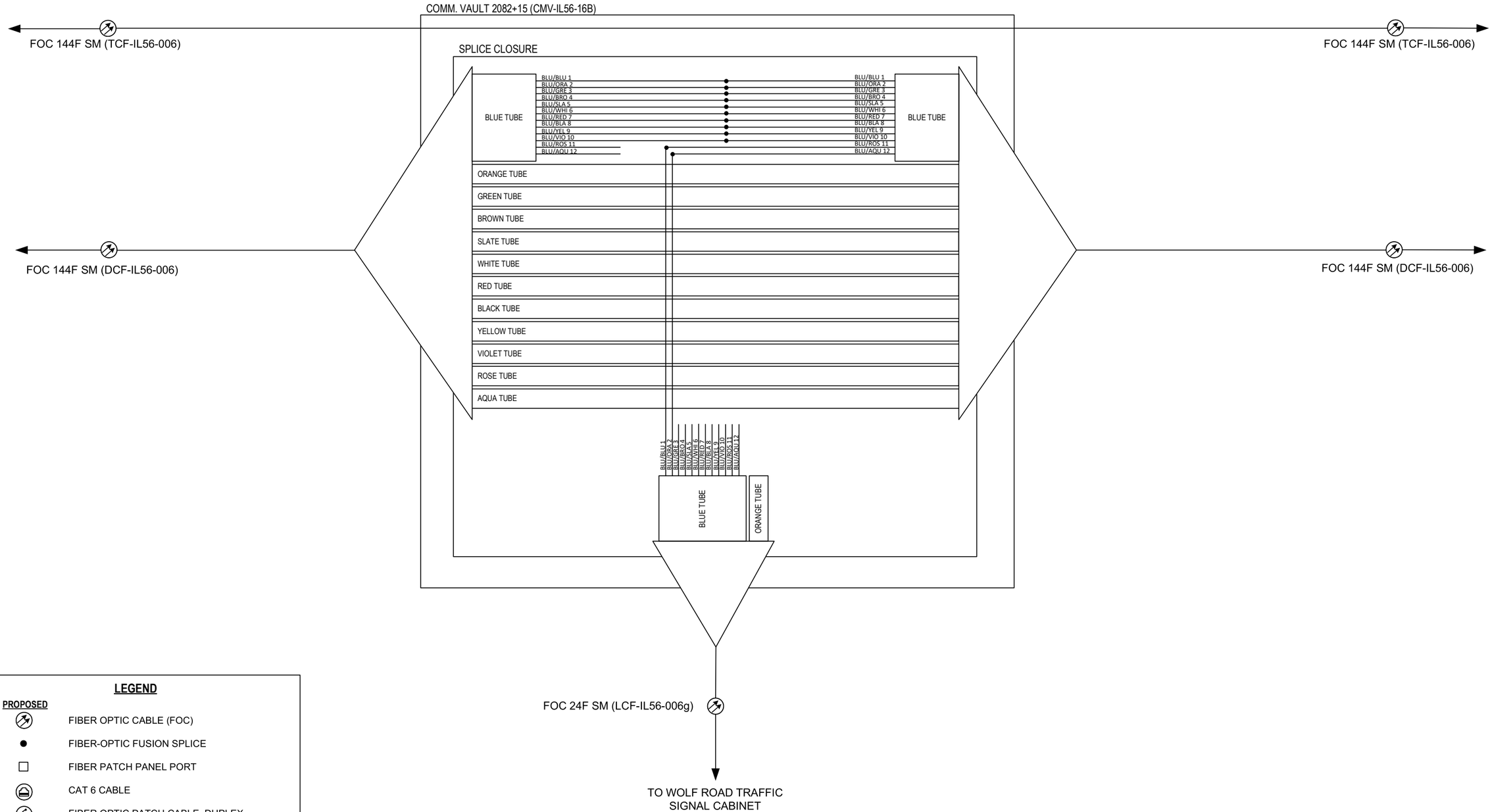

LEGEND

PROPOSED

- FIBER OPTIC CABLE (FOC)
- FIBER-OPTIC FUSION SPLICE
- FIBER PATCH PANEL PORT
- CAT 6 CABLE
- FIBER OPTIC PATCH CABLE, DUPLEX
- SFP-S — FIBER OPTIC TRANSCEIVER – SINGLE MODE
- DMS — DYNAMIC MESSAGE SIGN (DMS)
- CNTRL — DMS CONTROLLER
- PTZ — CCTV CAMERA, PAN-TILT-ZOOM
- RPR — REMOTE POWER RELAY
- UPS — UNINTERRUPTIBLE POWER SUPPLY

NOTES:

1. DISTRIBUTION CABLE-FIBER (DCF) TUBES CONTAINING UNUSED FIBER STRANDS SHALL REMAIN UNCUT UNLESS OTHERWISE DIRECTED BY THE ENGINEER.
2. TRUNK CABLE-FIBER (TCF) SHALL HAVE SLACK STORED WITHIN THE SPLICE COMMUNICATIONS VAULT AND SHALL PASS THROUGH UNCUT.
3. UNSPLICED FIBER STRANDS SHALL BE COILED WITHIN SPLICE CLOSURE.

ITS-44

PARSONS

DESIGNED - YJ	REVISED -	
DRAWN - MT	REVISED -	
CHECKED - RCB/KA	REVISED -	
DATE - 11-22-2024	REVISED -	

STATE OF ILLINOIS
DEPARTMENT OF TRANSPORTATION

TRAFFIC SIGNAL FIBER SPLICING DIAGRAM (1 OF 2)
CERMAK RD / 22ND ST. AND WOLF ROAD

N.T.S. | SHEET OF SHEETS | STA. TO STA.

F.A.P. RTE.	SECTION	COUNTY	TOTAL SHEETS	SHEET NO.
365	20-265-SUR, SW & TS	DUPAGE/COOK	492	383
		CONTRACT NO. 62N39		
		ILLINOIS	FED. AID PROJECT	

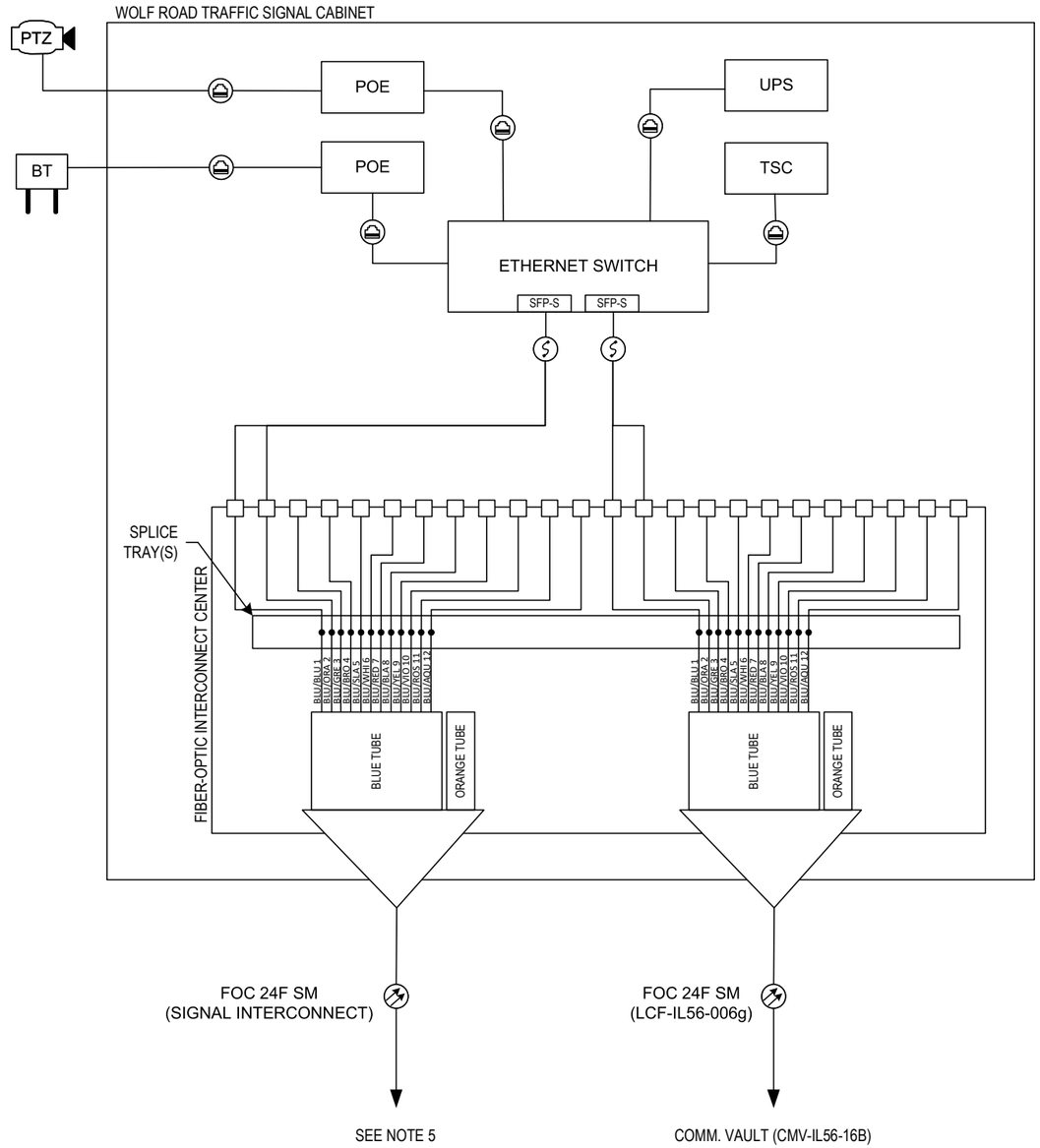

LEGEND

PROPOSED

- FIBER OPTIC CABLE (FOC)
- FIBER-OPTIC FUSION SPLICE
- FIBER PATCH PANEL PORT
- CAT 6 CABLE
- FIBER OPTIC PATCH CABLE, DUPLEX
- SFP-S — FIBER OPTIC TRANSCEIVER – SINGLE MODE
- BT — BLUETOOTH DETECTOR
- TSC — TRAFFIC SIGNAL CONTROLLER
- PTZ — CCTV CAMERA, PAN-TILT-ZOOM
- POE — POWER OVER ETHERNET INJECTOR
- UPS — UNINTERRUPTIBLE POWER SUPPLY

NOTES:

1. DISTRIBUTION CABLE-FIBER (DCF) TUBES CONTAINING UNUSED FIBER STRANDS SHALL REMAIN UNCUT UNLESS OTHERWISE DIRECTED BY THE ENGINEER.
2. TRUNK CABLE-FIBER (TCF) SHALL HAVE SLACK STORED WITHIN THE SPLICE COMMUNICATIONS VAULT AND SHALL PASS THROUGH UNCUT.
3. UNSPLICED FIBER STRANDS SHALL BE COILED WITHIN SPLICE TRAY.
4. FIBER-OPTIC CABLE DEPICTED IS GUIDANCE ONLY. ACTUAL FIBER-OPTIC CABLE FROM DMS CONTROLLER TO DMS DISPLAY SHALL BE IN ACCORDANCE WITH THE DMS MANUFACTURER'S REQUIREMENTS.
5. REFER TO TRAFFIC SIGNAL PLANS AND INTERCONNECT SHEETS FOR ADDITIONAL INFORMATION.

ITS-45

PARSONS

DESIGNED	- YJ	REVISED	-
DRAWN	- MT	REVISED	-
CHECKED	- RCB/KA	REVISED	-
DATE	- 11-22-2024	REVISED	-

STATE OF ILLINOIS
DEPARTMENT OF TRANSPORTATION

TRAFFIC SIGNAL FIBER SPLICING DIAGRAM (2 OF 2)
CERMAK RD / 22ND ST. AND WOLF ROAD

N.T.S. | SHEET OF SHEETS | STA. TO STA.

F.A.P. RTE.	SECTION	COUNTY	TOTAL SHEETS	SHEET NO.
365	20-265-SUR, SW & TS	DUPAGE/COOK	492	384

CONTRACT NO. 62N39

ILLINOIS | FED. AID PROJECT

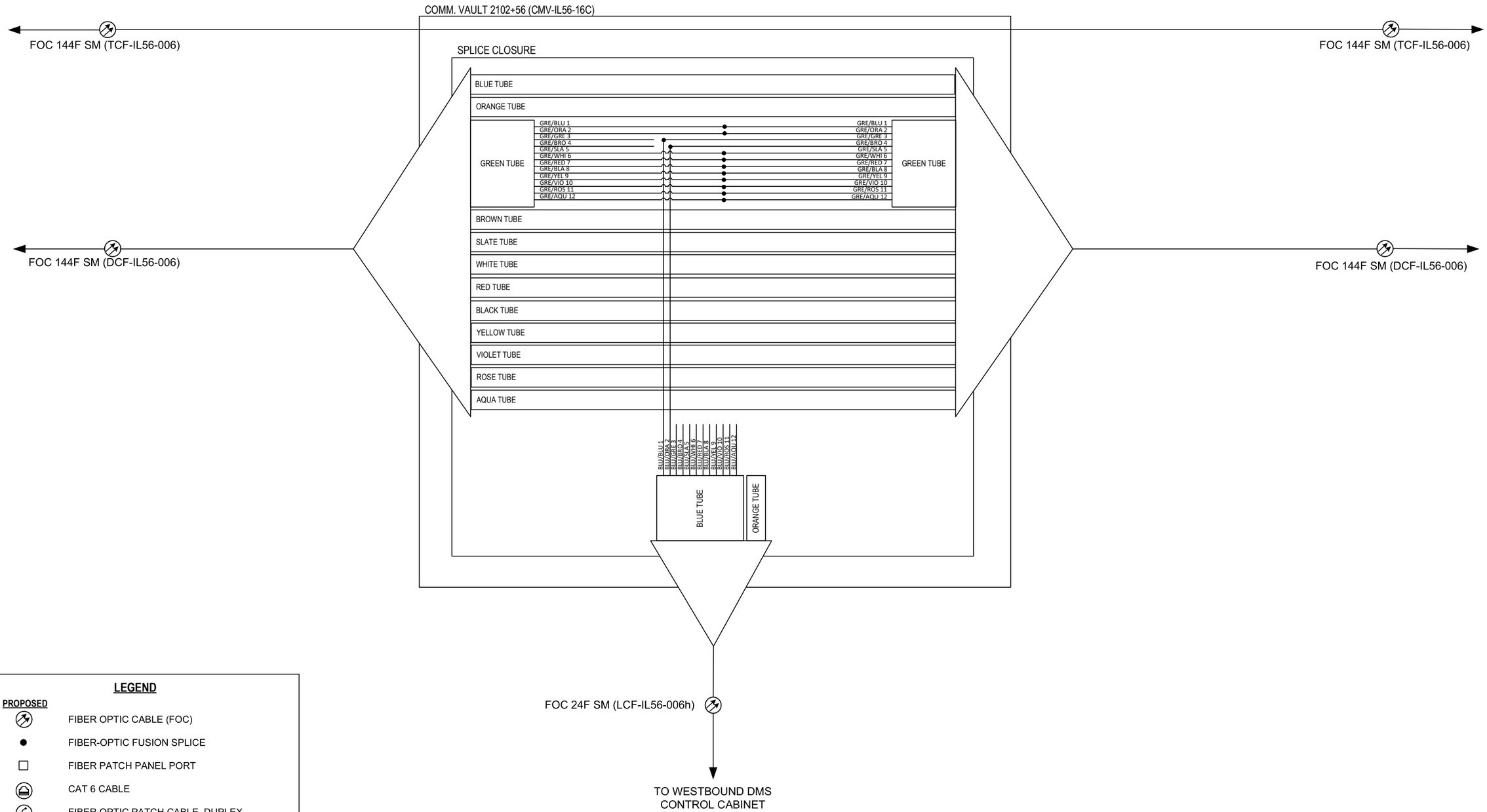

LEGEND

PROPOSED

- FIBER OPTIC CABLE (FOC)
- FIBER-OPTIC FUSION SPLICE
- FIBER PATCH PANEL PORT
- CAT 6 CABLE
- FIBER OPTIC PATCH CABLE, DUPLEX
- SFP-S — FIBER OPTIC TRANSCEIVER – SINGLE MODE
- DMS — DYNAMIC MESSAGE SIGN (DMS)
- CNTRL — DMS CONTROLLER
- PTZ — CCTV CAMERA, PAN-TILT-ZOOM
- RPR — REMOTE POWER RELAY
- UPS — UNINTERRUPTIBLE POWER SUPPLY

NOTES:

1. DISTRIBUTION CABLE-FIBER (DCF) TUBES CONTAINING UNUSED FIBER STRANDS SHALL REMAIN UNCUT UNLESS OTHERWISE DIRECTED BY THE ENGINEER.
2. TRUNK CABLE-FIBER (TCF) SHALL HAVE SLACK STORED WITHIN THE SPLICE COMMUNICATIONS VAULT AND SHALL PASS THROUGH UNCUT.
3. UNSPLICED FIBER STRANDS SHALL BE COILED WITHIN SPLICE CLOSURE.

ITS-46

PARSONS

DESIGNED - YJ	REVISED -	
DRAWN - MT	REVISED -	
CHECKED - RCB/KA	REVISED -	
DATE - 11-22-2024	REVISED -	

STATE OF ILLINOIS
DEPARTMENT OF TRANSPORTATION

DMS FIBER SPLICING DIAGRAM (1 OF 2)
22ND ST. / CERMAK RD. AT WESTBOUND DMS

N.T.S. | SHEET OF SHEETS | STA. TO STA.

F.A.P. RTE.	SECTION	COUNTY	TOTAL SHEETS	SHEET NO.
365	20-265-SUR, SW & TS	DUPAGE/COOK	492	385

CONTRACT NO. 62N39

ILLINOIS | FED. AID PROJECT

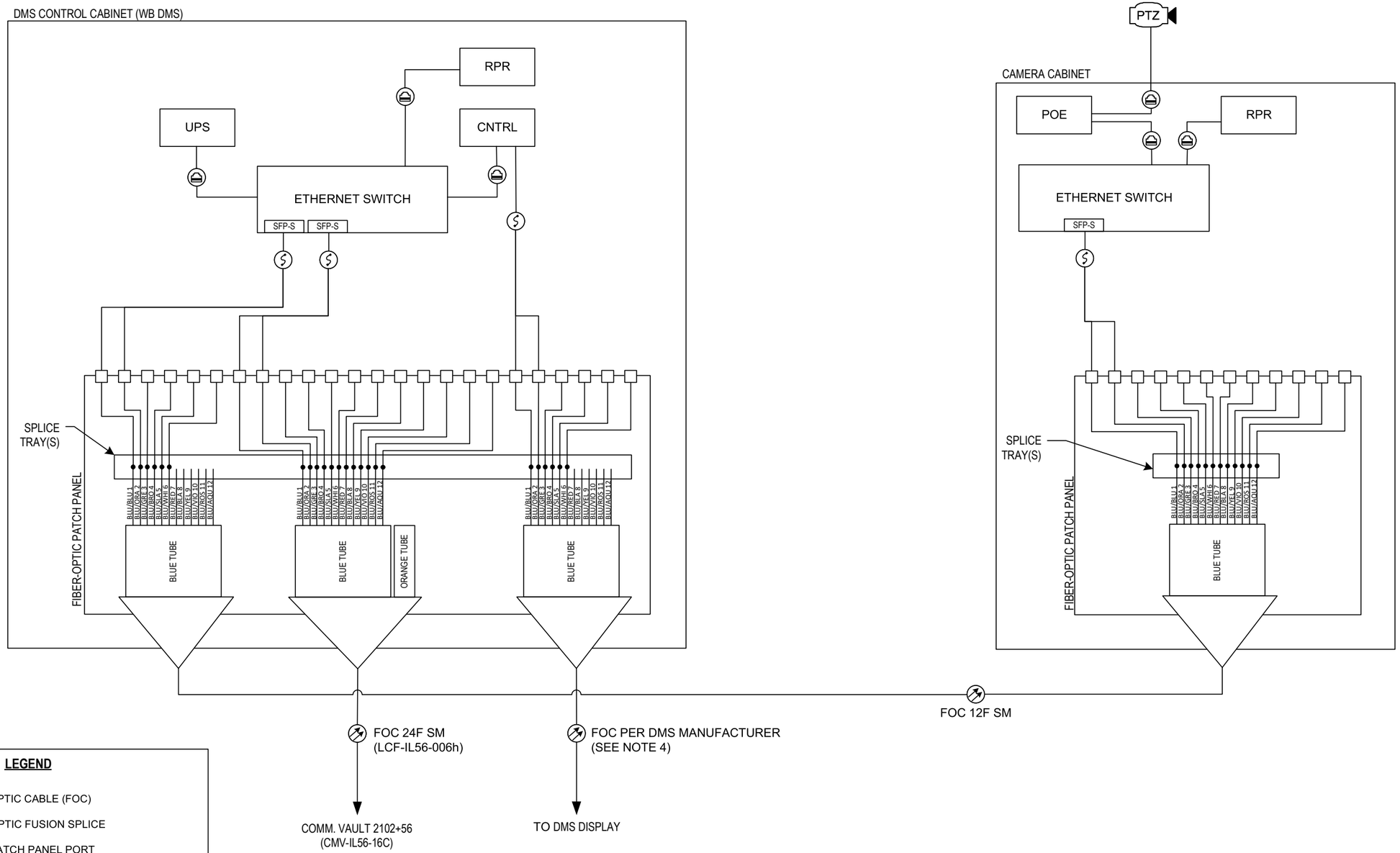

LEGEND

PROPOSED

- FIBER OPTIC CABLE (FOC)
- FIBER-OPTIC FUSION SPLICE
- FIBER PATCH PANEL PORT
- CAT 6 CABLE
- FIBER OPTIC PATCH CABLE, DUPLEX
- SFP-S — FIBER OPTIC TRANSCEIVER – SINGLE MODE
- DMS — DYNAMIC MESSAGE SIGN (DMS)
- CNTRL — DMS CONTROLLER
- PTZ — CCTV CAMERA, PAN-TILT-ZOOM
- RPR — REMOTE POWER RELAY
- UPS — UNINTERRUPTIBLE POWER SUPPLY

NOTES:

1. DISTRIBUTION CABLE-FIBER (DCF) TUBES CONTAINING UNUSED FIBER STRANDS SHALL REMAIN UNCUT UNLESS OTHERWISE DIRECTED BY THE ENGINEER.
2. TRUNK CABLE-FIBER (TCF) SHALL HAVE SLACK STORED WITHIN THE SPLICE COMMUNICATIONS VAULT AND SHALL PASS THROUGH UNCUT.
3. UNSPLICED FIBER STRANDS SHALL BE COILED WITHIN SPLICE TRAY.
4. FIBER-OPTIC CABLE DEPICTED IS GUIDANCE ONLY. ACTUAL FIBER-OPTIC CABLE FROM DMS CONTROLLER TO DMS DISPLAY SHALL BE IN ACCORDANCE WITH THE DMS MANUFACTURER'S REQUIREMENTS.

ITS-47

PARSONS

DESIGNED - YJ	REVISED -	STATE OF ILLINOIS DEPARTMENT OF TRANSPORTATION	DMS FIBER SPLICING DIAGRAM (2 OF 2) 22ND ST. / CERMAK RD. AT WESTBOUND DMS
DRAWN - MT	REVISED -		
CHECKED - RCB/KA	REVISED -		
DATE - 11-22-2024	REVISED -		N.T.S. SHEET OF SHEETS STA. TO STA.

F.A.P. RTE.	SECTION	COUNTY	TOTAL SHEETS	SHEET NO.
365	20-265-SUR, SW & TS	DUPAGE/COOK	492	386
		CONTRACT NO. 62N39		
		ILLINOIS	FED. AID PROJECT	

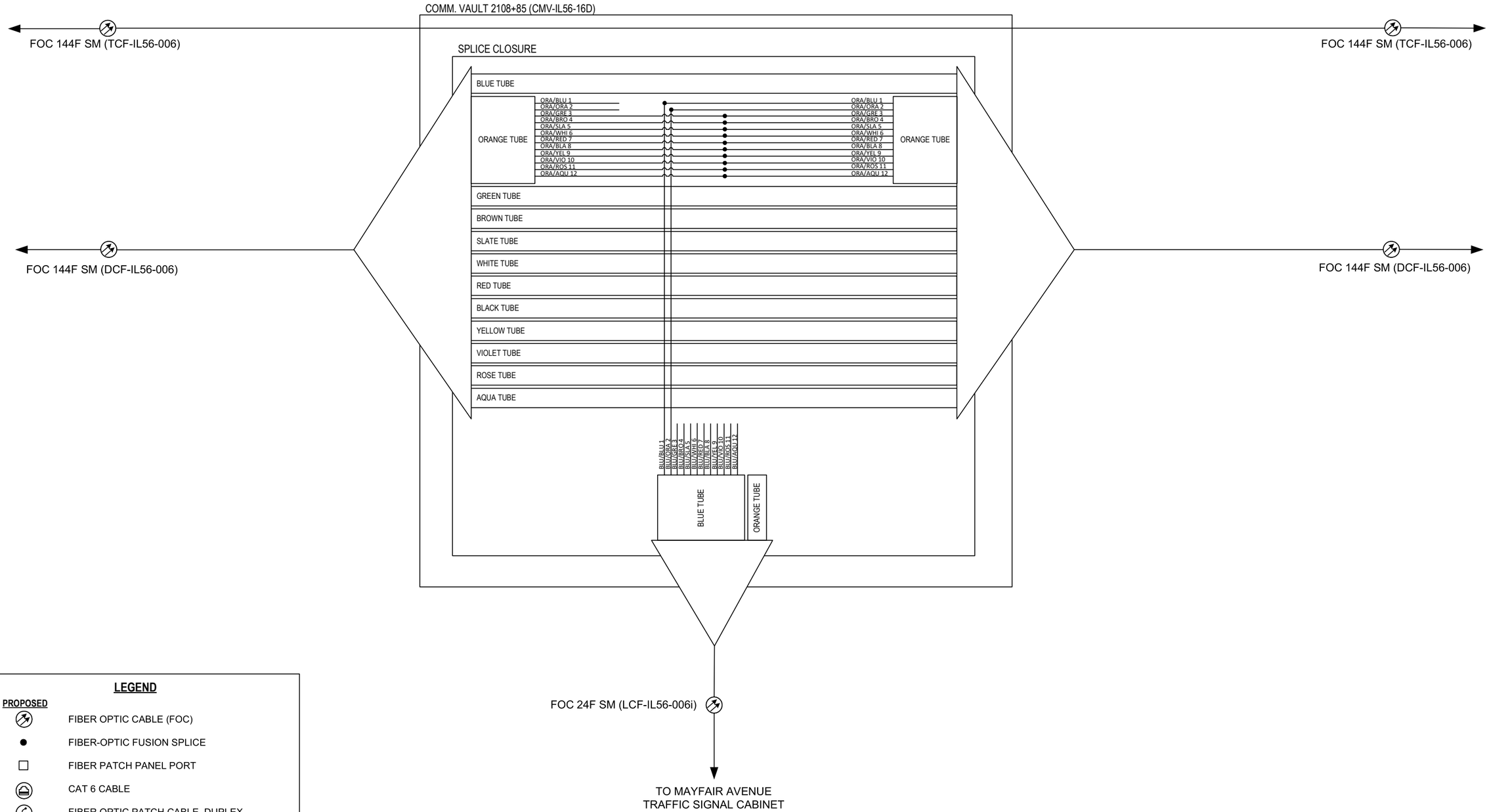

LEGEND

PROPOSED

- FIBER OPTIC CABLE (FOC)
- FIBER-OPTIC FUSION SPLICE
- FIBER PATCH PANEL PORT
- CAT 6 CABLE
- FIBER OPTIC PATCH CABLE, DUPLEX
- SFP-S — FIBER OPTIC TRANSCEIVER – SINGLE MODE
- DMS — DYNAMIC MESSAGE SIGN (DMS)
- CNTRL — DMS CONTROLLER
- PTZ — CCTV CAMERA, PAN-TILT-ZOOM
- RPR — REMOTE POWER RELAY
- UPS — UNINTERRUPTIBLE POWER SUPPLY

NOTES:

1. DISTRIBUTION CABLE-FIBER (DCF) TUBES CONTAINING UNUSED FIBER STRANDS SHALL REMAIN UNCUT UNLESS OTHERWISE DIRECTED BY THE ENGINEER.
2. TRUNK CABLE-FIBER (TCF) SHALL HAVE SLACK STORED WITHIN THE SPLICE COMMUNICATIONS VAULT AND SHALL PASS THROUGH UNCUT.
3. UNSPLICED FIBER STRANDS SHALL BE COILED WITHIN SPLICE CLOSURE.

ITS-48

PARSONS

DESIGNED - YJ	REVISED -	
DRAWN - MT	REVISED -	
CHECKED - RCB/KA	REVISED -	
DATE - 11-22-2024	REVISED -	

STATE OF ILLINOIS
DEPARTMENT OF TRANSPORTATION

TRAFFIC SIGNAL FIBER SPLICING DIAGRAM (1 OF 2)
CERMAK RD / 22ND ST. AND MAYFAIR AVENUE

N.T.S. | SHEET OF SHEETS | STA. TO STA.

F.A.P. RTE.	SECTION	COUNTY	TOTAL SHEETS	SHEET NO.
365	20-265-SUR, SW & TS	DUPAGE/COOK	492	387
		CONTRACT NO. 62N39		
		ILLINOIS	FED. AID PROJECT	

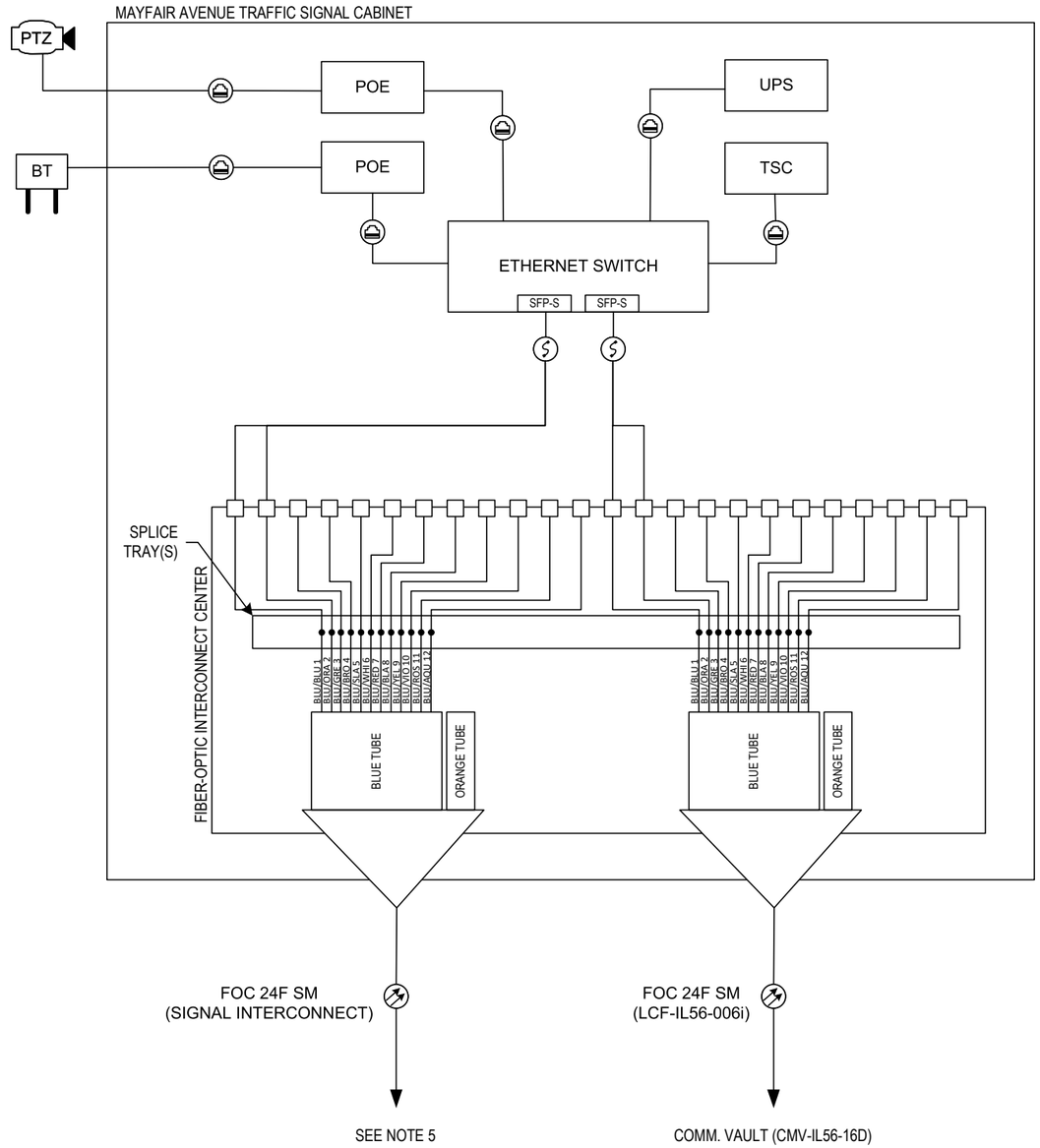

LEGEND

PROPOSED

- FIBER OPTIC CABLE (FOC)
- FIBER-OPTIC FUSION SPLICE
- FIBER PATCH PANEL PORT
- CAT 6 CABLE
- FIBER OPTIC PATCH CABLE, DUPLEX
- SFP-S — FIBER OPTIC TRANSCEIVER – SINGLE MODE
- BT — BLUETOOTH DETECTOR
- TSC — TRAFFIC SIGNAL CONTROLLER
- PTZ — CCTV CAMERA, PAN-TILT-ZOOM
- POE — POWER OVER ETHERNET INJECTOR
- UPS — UNINTERRUPTIBLE POWER SUPPLY

NOTES:

1. DISTRIBUTION CABLE-FIBER (DCF) TUBES CONTAINING UNUSED FIBER STRANDS SHALL REMAIN UNCUT UNLESS OTHERWISE DIRECTED BY THE ENGINEER.
2. TRUNK CABLE-FIBER (TCF) SHALL HAVE SLACK STORED WITHIN THE SPLICE COMMUNICATIONS VAULT AND SHALL PASS THROUGH UNCUT.
3. UNSPLICED FIBER STRANDS SHALL BE COILED WITHIN SPLICE TRAY.
4. FIBER-OPTIC CABLE DEPICTED IS GUIDANCE ONLY. ACTUAL FIBER-OPTIC CABLE FROM DMS CONTROLLER TO DMS DISPLAY SHALL BE IN ACCORDANCE WITH THE DMS MANUFACTURER'S REQUIREMENTS.
5. REFER TO TRAFFIC SIGNAL PLANS AND INTERCONNECT SHEETS FOR ADDITIONAL INFORMATION.

ITS-49

PARSONS

DESIGNED	- YJ	REVISED	-
DRAWN	- MT	REVISED	-
CHECKED	- RCB/KA	REVISED	-
DATE	- 11-22-2024	REVISED	-

STATE OF ILLINOIS
DEPARTMENT OF TRANSPORTATION

TRAFFIC SIGNAL FIBER SPLICING DIAGRAM (2 OF 2)
CERMAK RD / 22ND ST. AND MAYFAIR AVENUE

N.T.S. | SHEET OF SHEETS | STA. TO STA.

F.A.P. RTE.	SECTION	COUNTY	TOTAL SHEETS	SHEET NO.
365	20-265-SUR, SW & TS	DUPAGE/COOK	492	388

CONTRACT NO. 62N39

ILLINOIS | FED. AID PROJECT

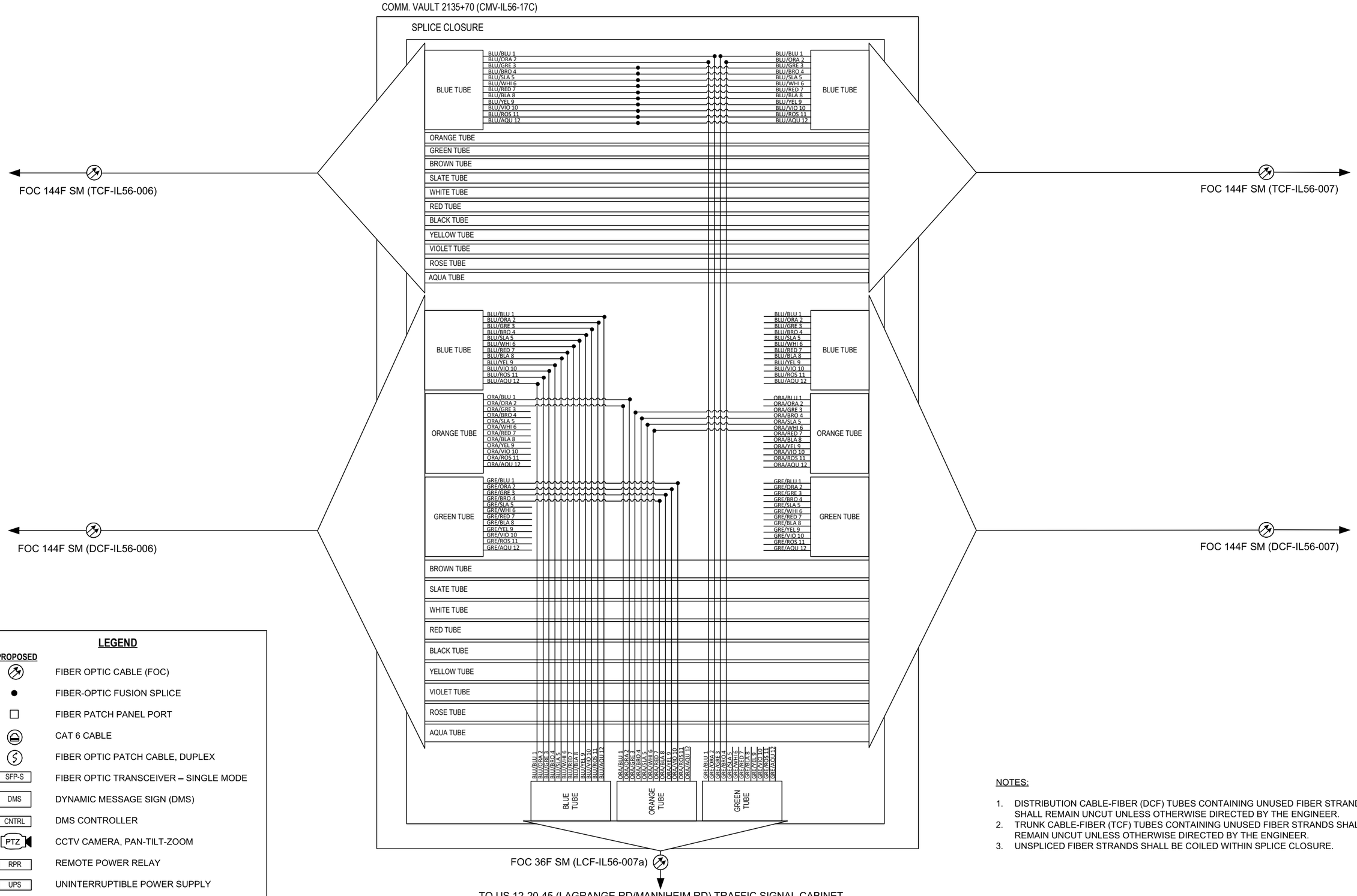

LEGEND

PROPOSED

- FIBER OPTIC CABLE (FOC)
- FIBER-OPTIC FUSION SPLICE
- FIBER PATCH PANEL PORT
- CAT 6 CABLE
- FIBER OPTIC PATCH CABLE, DUPLEX
- SFP-S — FIBER OPTIC TRANSCEIVER – SINGLE MODE
- DMS — DYNAMIC MESSAGE SIGN (DMS)
- CNTRL — DMS CONTROLLER
- PTZ — CCTV CAMERA, PAN-TILT-ZOOM
- RPR — REMOTE POWER RELAY
- UPS — UNINTERRUPTIBLE POWER SUPPLY

NOTES:

1. DISTRIBUTION CABLE-FIBER (DCF) TUBES CONTAINING UNUSED FIBER STRANDS SHALL REMAIN UNCUT UNLESS OTHERWISE DIRECTED BY THE ENGINEER.
2. TRUNK CABLE-FIBER (TCF) TUBES CONTAINING UNUSED FIBER STRANDS SHALL REMAIN UNCUT UNLESS OTHERWISE DIRECTED BY THE ENGINEER.
3. UNSPLICED FIBER STRANDS SHALL BE COILED WITHIN SPLICE CLOSURE.

ITS-50

PARSONS

DESIGNED - YJ	REVISED -	
DRAWN - MT	REVISED -	
CHECKED - RCB/KA	REVISED -	
DATE - 11-22-2024	REVISED -	

STATE OF ILLINOIS
DEPARTMENT OF TRANSPORTATION

TRAFFIC SIGNAL FIBER SPLICING DIAGRAM (1 OF 2)
CERMAK RD / 22ND ST. AND US 12-20-45 (LAGRANGE/MANNHEIM)

N.T.S. | SHEET OF SHEETS | STA. TO STA.

F.A.P. RTE.	SECTION	COUNTY	TOTAL SHEETS	SHEET NO.
365	20-265-SUR, SW & TS	DUPAGE/COOK	492	389

CONTRACT NO. 62N39

ILLINOIS | FED. AID PROJECT

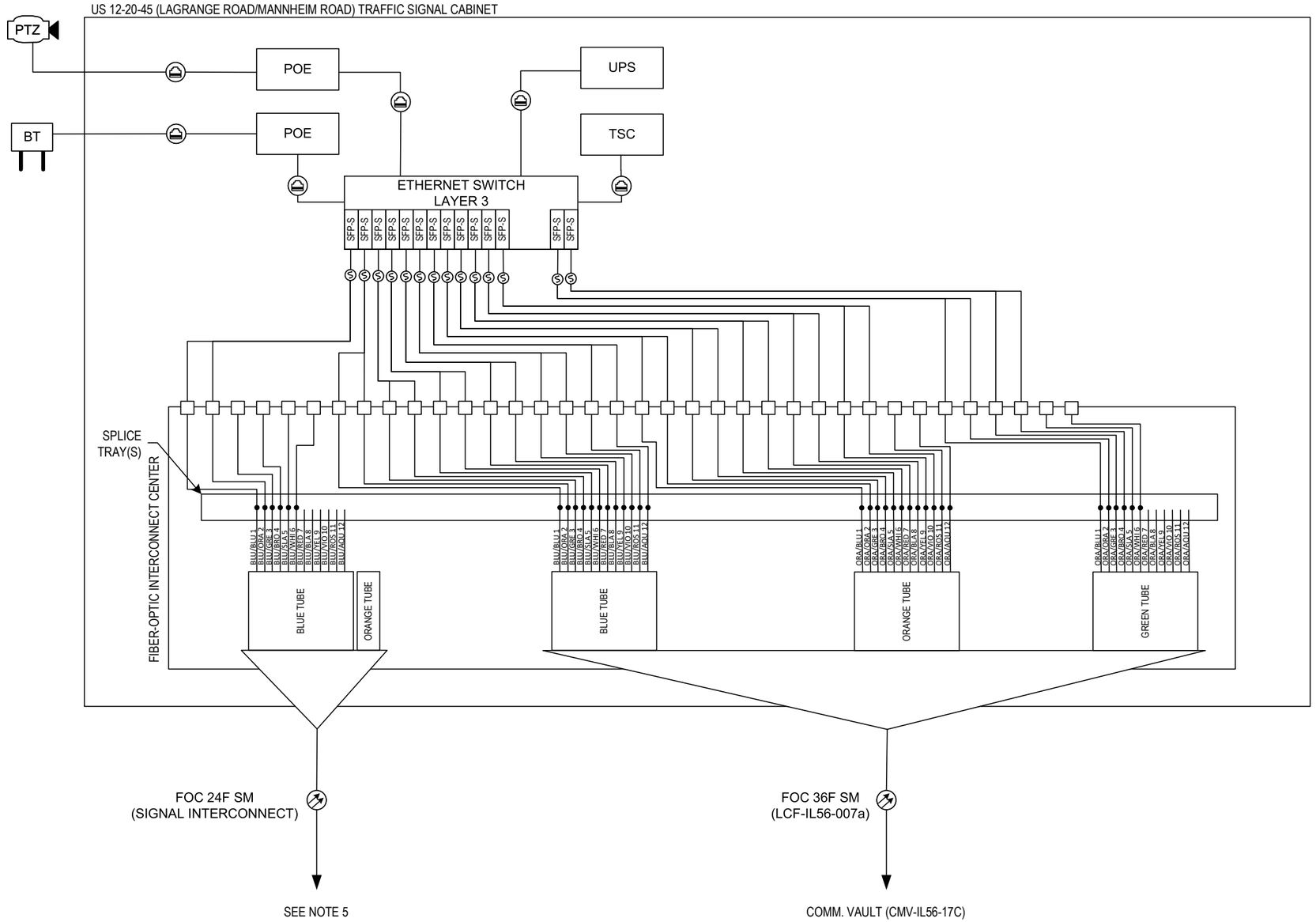

LEGEND

PROPOSED

- FIBER OPTIC CABLE (FOC)
- FIBER-OPTIC FUSION SPLICE
- FIBER PATCH PANEL PORT
- CAT 6 CABLE
- FIBER OPTIC PATCH CABLE, DUPLEX
- SFP-S — FIBER OPTIC TRANSCEIVER – SINGLE MODE
- BT — BLUETOOTH DETECTOR
- TSC — TRAFFIC SIGNAL CONTROLLER
- PTZ — CCTV CAMERA, PAN-TILT-ZOOM
- POE — POWER OVER ETHERNET INJECTOR
- UPS — UNINTERRUPTIBLE POWER SUPPLY

NOTES:

1. DISTRIBUTION CABLE-FIBER (DCF) TUBES CONTAINING UNUSED FIBER STRANDS SHALL REMAIN UNCUT UNLESS OTHERWISE DIRECTED BY THE ENGINEER.
2. TRUNK CABLE-FIBER (TCF) TUBES CONTAINING UNUSED FIBER STRANDS SHALL REMAIN UNCUT UNLESS OTHERWISE DIRECTED BY THE ENGINEER.
3. UNSPLICED FIBER STRANDS SHALL BE COILED WITHIN SPLICE TRAY.
4. FIBER-OPTIC CABLE DEPICTED IS GUIDANCE ONLY. ACTUAL FIBER-OPTIC CABLE FROM DMS CONTROLLER TO DMS DISPLAY SHALL BE IN ACCORDANCE WITH THE DMS MANUFACTURER'S REQUIREMENTS.
5. REFER TO TRAFFIC SIGNAL PLANS AND INTERCONNECT SHEETS FOR ADDITIONAL INFORMATION.

ITS-51

PARSONS

DESIGNED	- YJ	REVISED	-
DRAWN	- MT	REVISED	-
CHECKED	- RCB/KA	REVISED	-
DATE	- 11-22-2024	REVISED	-

STATE OF ILLINOIS
DEPARTMENT OF TRANSPORTATION

TRAFFIC SIGNAL FIBER SPLICING DIAGRAM (2 OF 2)
CERMAK RD / 22ND ST. AND US 12-20-45 (LAGRANGE/MANNHEIM)

N.T.S. | SHEET OF SHEETS | STA. TO STA.

F.A.P. RTE.	SECTION	COUNTY	TOTAL SHEETS	SHEET NO.
365	20-265-SUR, SW & TS	DUPAGE/COOK	492	390

CONTRACT NO. 62N39

ILLINOIS | FED. AID PROJECT

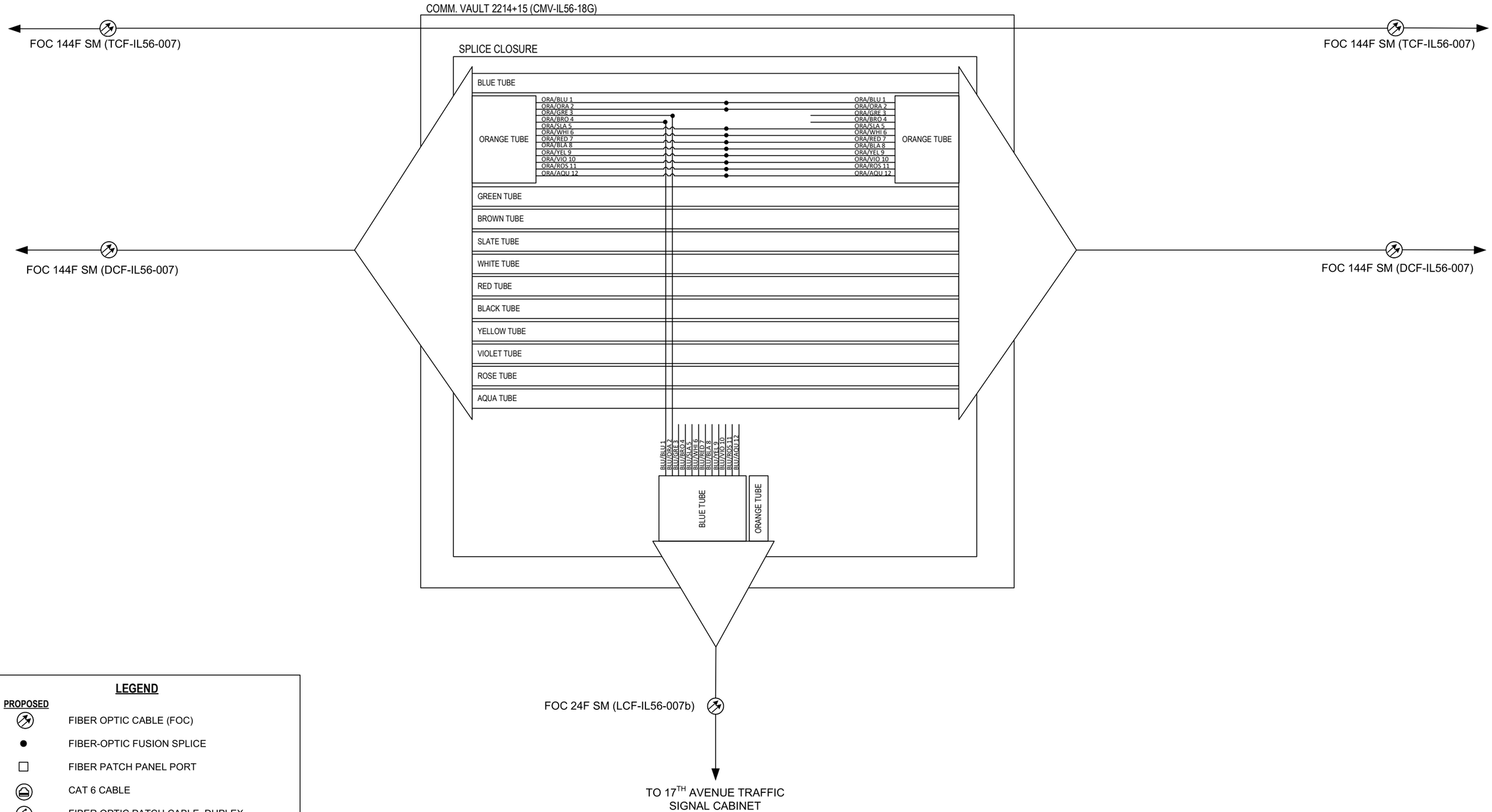

LEGEND

PROPOSED

- FIBER OPTIC CABLE (FOC)
- FIBER-OPTIC FUSION SPLICE
- FIBER PATCH PANEL PORT
- CAT 6 CABLE
- FIBER OPTIC PATCH CABLE, DUPLEX
- SFP-S — FIBER OPTIC TRANSCEIVER – SINGLE MODE
- DMS — DYNAMIC MESSAGE SIGN (DMS)
- CNTRL — DMS CONTROLLER
- PTZ — CCTV CAMERA, PAN-TILT-ZOOM
- RPR — REMOTE POWER RELAY
- UPS — UNINTERRUPTIBLE POWER SUPPLY

NOTES:

1. DISTRIBUTION CABLE-FIBER (DCF) TUBES CONTAINING UNUSED FIBER STRANDS SHALL REMAIN UNCUT UNLESS OTHERWISE DIRECTED BY THE ENGINEER.
2. TRUNK CABLE-FIBER (TCF) SHALL HAVE SLACK STORED WITHIN THE SPLICE COMMUNICATIONS VAULT AND SHALL PASS THROUGH UNCUT.
3. UNSPLICED FIBER STRANDS SHALL BE COILED WITHIN SPLICE CLOSURE.

ITS-52

PARSONS

DESIGNED - YJ	REVISED -	
DRAWN - MT	REVISED -	
CHECKED - RCB/KA	REVISED -	
DATE - 11-22-2024	REVISED -	

STATE OF ILLINOIS
DEPARTMENT OF TRANSPORTATION

TRAFFIC SIGNAL FIBER SPLICING DIAGRAM (1 OF 2)
CERMAK RD / 22ND ST. AND 17TH AVENUE

N.T.S. | SHEET OF SHEETS | STA. TO STA.

F.A.P. RTE.	SECTION	COUNTY	TOTAL SHEETS	SHEET NO.
365	20-265-SUR, SW & TS	DUPAGE/COOK	492	391
		CONTRACT NO. 62N39		
		ILLINOIS	FED. AID PROJECT	

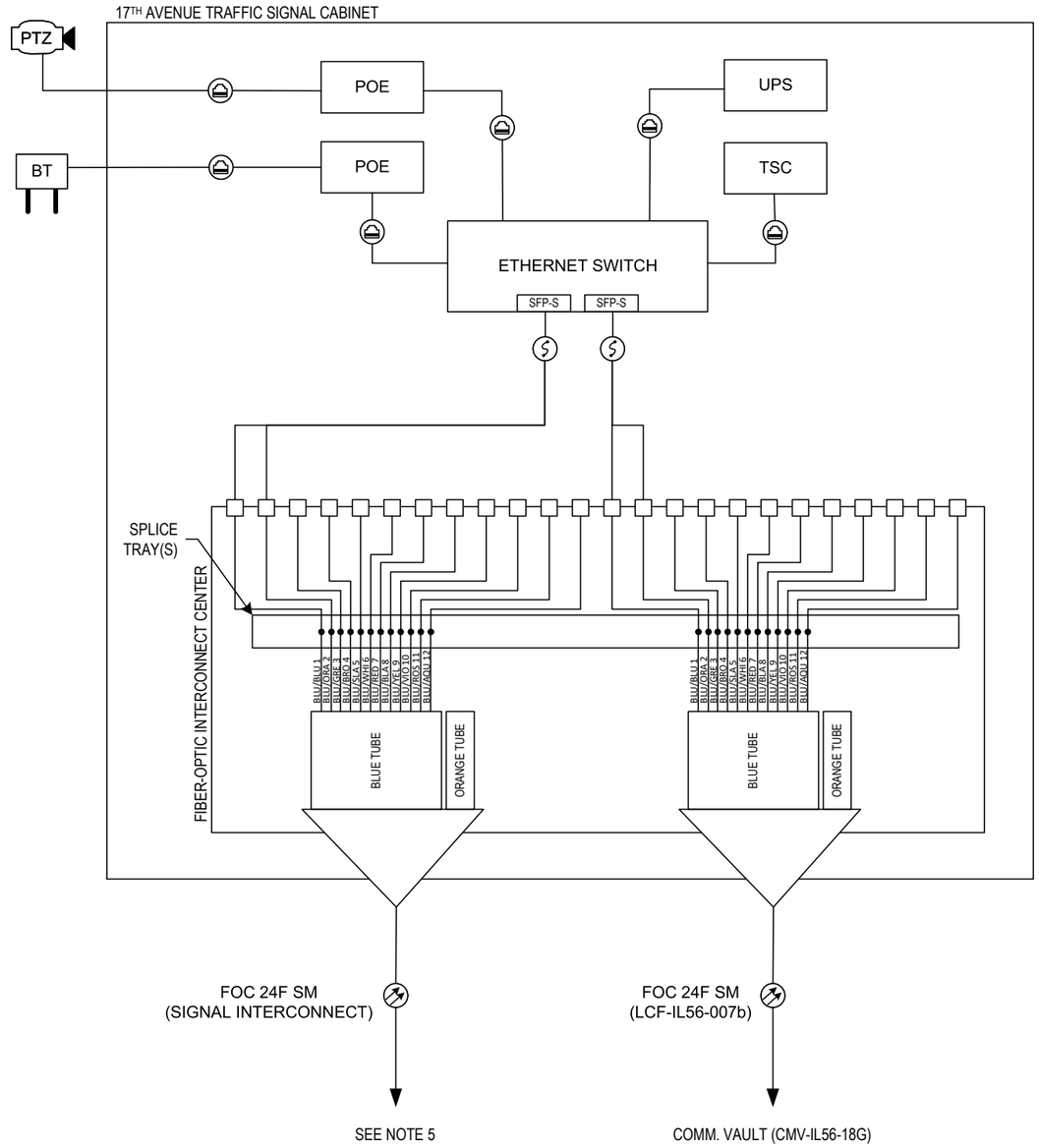

LEGEND

PROPOSED

- FIBER OPTIC CABLE (FOC)
- FIBER-OPTIC FUSION SPLICE
- FIBER PATCH PANEL PORT
- CAT 6 CABLE
- FIBER OPTIC PATCH CABLE, DUPLEX
- SFP-S — FIBER OPTIC TRANSCEIVER – SINGLE MODE
- BT — BLUETOOTH DETECTOR
- TSC — TRAFFIC SIGNAL CONTROLLER
- PTZ — CCTV CAMERA, PAN-TILT-ZOOM
- POE — POWER OVER ETHERNET INJECTOR
- UPS — UNINTERRUPTIBLE POWER SUPPLY

NOTES:

1. DISTRIBUTION CABLE-FIBER (DCF) TUBES CONTAINING UNUSED FIBER STRANDS SHALL REMAIN UNCUT UNLESS OTHERWISE DIRECTED BY THE ENGINEER.
2. TRUNK CABLE-FIBER (TCF) SHALL HAVE SLACK STORED WITHIN THE SPLICE COMMUNICATIONS VAULT AND SHALL PASS THROUGH UNCUT.
3. UNSPLICED FIBER STRANDS SHALL BE COILED WITHIN SPLICE TRAY.
4. FIBER-OPTIC CABLE DEPICTED IS GUIDANCE ONLY. ACTUAL FIBER-OPTIC CABLE FROM DMS CONTROLLER TO DMS DISPLAY SHALL BE IN ACCORDANCE WITH THE DMS MANUFACTURER'S REQUIREMENTS.
5. REFER TO TRAFFIC SIGNAL PLANS AND INTERCONNECT SHEETS FOR ADDITIONAL INFORMATION.

ITS-53

PARSONS

DESIGNED - YJ	REVISED -	
DRAWN - MT	REVISED -	
CHECKED - RCB/KA	REVISED -	
DATE - 11-22-2024	REVISED -	

STATE OF ILLINOIS
DEPARTMENT OF TRANSPORTATION

TRAFFIC SIGNAL FIBER SPLICING DIAGRAM (2 OF 2)
CERMAK RD / 22ND ST. AND 17TH AVENUE

N.T.S. | SHEET OF SHEETS | STA. TO STA.

F.A.P. RTE.	SECTION	COUNTY	TOTAL SHEETS	SHEET NO.
365	20-265-SUR, SW & TS	DUPAGE/COOK	492	392

CONTRACT NO. 62N39

ILLINOIS | FED. AID PROJECT

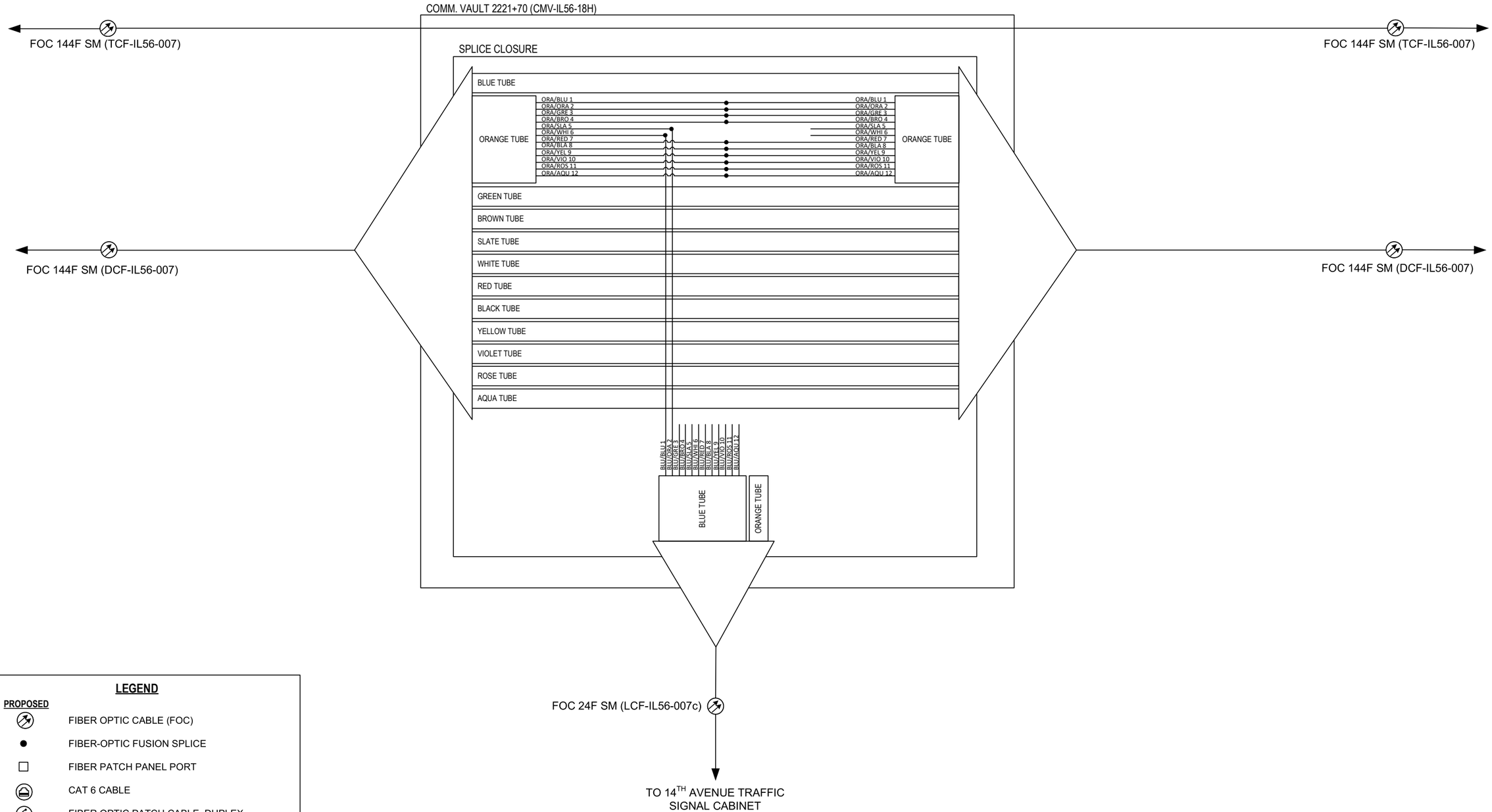

LEGEND

PROPOSED

- FIBER OPTIC CABLE (FOC)
- FIBER-OPTIC FUSION SPLICE
- FIBER PATCH PANEL PORT
- CAT 6 CABLE
- FIBER OPTIC PATCH CABLE, DUPLEX
- SFP-S — FIBER OPTIC TRANSCEIVER – SINGLE MODE
- DMS — DYNAMIC MESSAGE SIGN (DMS)
- CNTRL — DMS CONTROLLER
- PTZ — CCTV CAMERA, PAN-TILT-ZOOM
- RPR — REMOTE POWER RELAY
- UPS — UNINTERRUPTIBLE POWER SUPPLY

NOTES:

1. DISTRIBUTION CABLE-FIBER (DCF) TUBES CONTAINING UNUSED FIBER STRANDS SHALL REMAIN UNCUT UNLESS OTHERWISE DIRECTED BY THE ENGINEER.
2. TRUNK CABLE-FIBER (TCF) SHALL HAVE SLACK STORED WITHIN THE SPLICE COMMUNICATIONS VAULT AND SHALL PASS THROUGH UNCUT.
3. UNSPLICED FIBER STRANDS SHALL BE COILED WITHIN SPLICE CLOSURE.

PARSONS

DESIGNED - YJ	REVISED -	
DRAWN - MT	REVISED -	
CHECKED - RCB/KA	REVISED -	
DATE - 11-22-2024	REVISED -	

STATE OF ILLINOIS
DEPARTMENT OF TRANSPORTATION

TRAFFIC SIGNAL FIBER SPLICING DIAGRAM (1 OF 2)
CERMAK RD / 22ND ST. AND 14TH AVENUE

N.T.S. | SHEET OF SHEETS | STA. TO STA.

F.A.P. RTE.	SECTION	COUNTY	TOTAL SHEETS	SHEET NO.
365	20-265-SUR, SW & TS	DUPAGE/COOK	492	393
		CONTRACT NO. 62N39		
		ILLINOIS	FED. AID PROJECT	

14TH AVENUE TRAFFIC SIGNAL CABINET

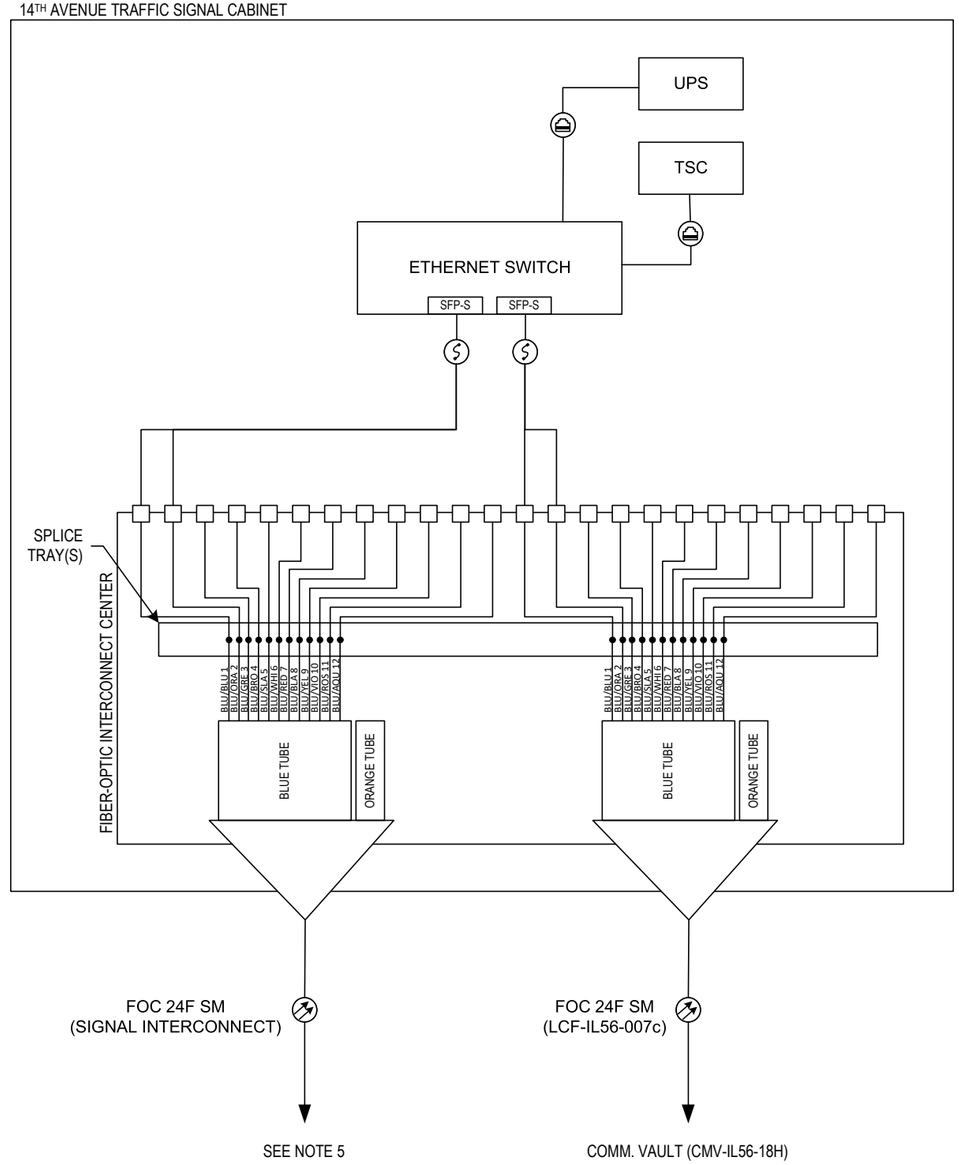

LEGEND

PROPOSED

- FIBER OPTIC CABLE (FOC)
- FIBER-OPTIC FUSION SPLICE
- FIBER PATCH PANEL PORT
- CAT 6 CABLE
- FIBER OPTIC PATCH CABLE, DUPLEX
- SFP-S — FIBER OPTIC TRANSCEIVER – SINGLE MODE
- BT — BLUETOOTH DETECTOR
- TSC — TRAFFIC SIGNAL CONTROLLER
- PTZ — CCTV CAMERA, PAN-TILT-ZOOM
- POE — POWER OVER ETHERNET INJECTOR
- UPS — UNINTERRUPTIBLE POWER SUPPLY

NOTES:

1. DISTRIBUTION CABLE-FIBER (DCF) TUBES CONTAINING UNUSED FIBER STRANDS SHALL REMAIN UNCUT UNLESS OTHERWISE DIRECTED BY THE ENGINEER.
2. TRUNK CABLE-FIBER (TCF) SHALL HAVE SLACK STORED WITHIN THE SPLICE COMMUNICATIONS VAULT AND SHALL PASS THROUGH UNCUT.
3. UNSPLICED FIBER STRANDS SHALL BE COILED WITHIN SPLICE TRAY.
4. FIBER-OPTIC CABLE DEPICTED IS GUIDANCE ONLY. ACTUAL FIBER-OPTIC CABLE FROM DMS CONTROLLER TO DMS DISPLAY SHALL BE IN ACCORDANCE WITH THE DMS MANUFACTURER'S REQUIREMENTS.
5. REFER TO TRAFFIC SIGNAL PLANS AND INTERCONNECT SHEETS FOR ADDITIONAL INFORMATION.

ITS-55

PARSONS

DESIGNED	- YJ	REVISED	-
DRAWN	- MT	REVISED	-
CHECKED	- RCB/KA	REVISED	-
DATE	- 11-22-2024	REVISED	-

STATE OF ILLINOIS
DEPARTMENT OF TRANSPORTATION

TRAFFIC SIGNAL FIBER SPLICING DIAGRAM (2 OF 2)
CERMAK RD / 22ND ST. AND 14TH AVENUE

N.T.S. | SHEET OF SHEETS | STA. TO STA.

F.A.P. RTE.	SECTION	COUNTY	TOTAL SHEETS	SHEET NO.
365	20-265-SUR, SW & TS	DUPAGE/COOK	492	394

CONTRACT NO. 62N39

ILLINOIS | FED. AID PROJECT

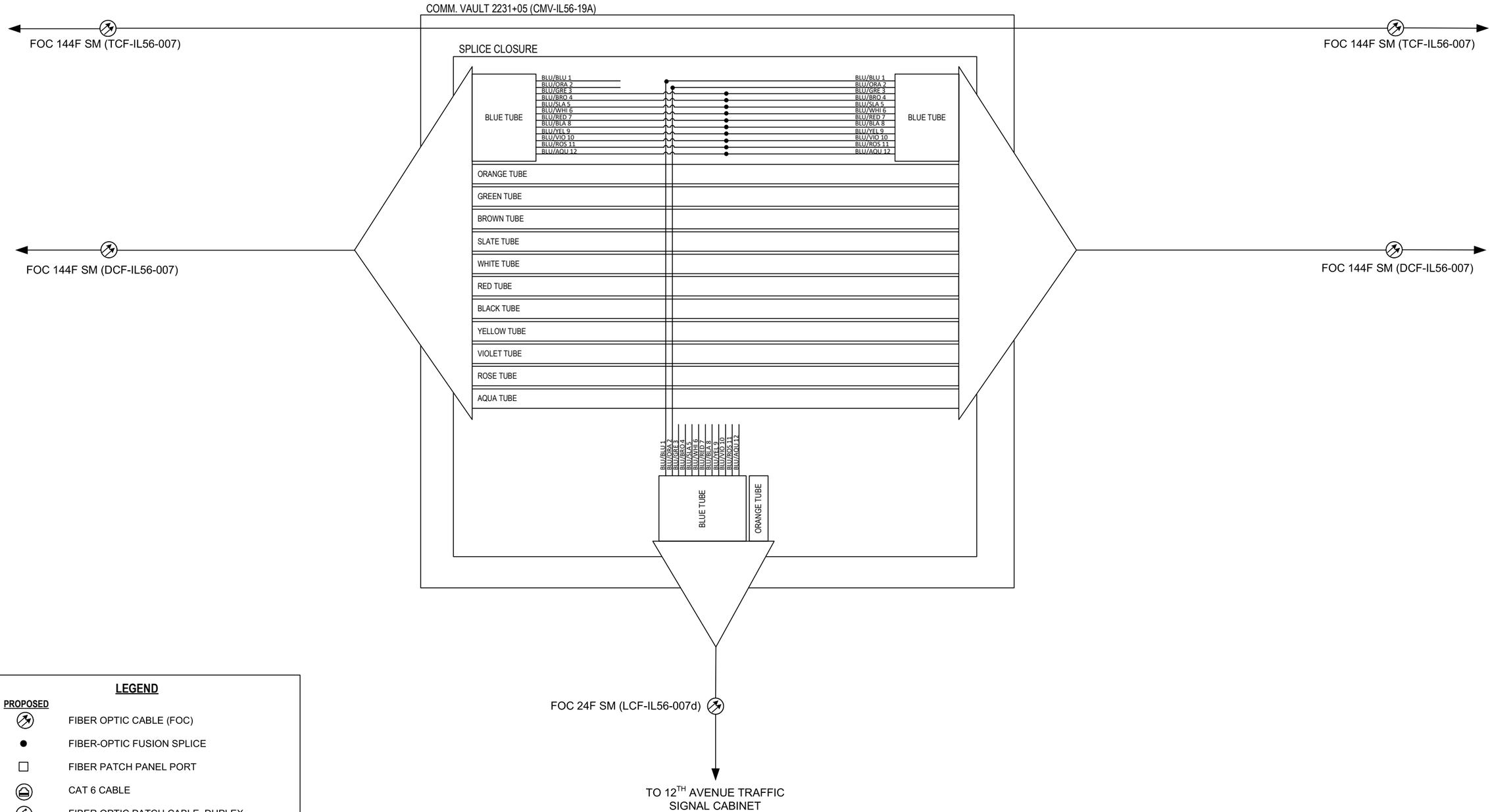

LEGEND

PROPOSED

- FIBER OPTIC CABLE (FOC)
- FIBER-OPTIC FUSION SPLICE
- FIBER PATCH PANEL PORT
- CAT 6 CABLE
- FIBER OPTIC PATCH CABLE, DUPLEX
- SFP-S — FIBER OPTIC TRANSCEIVER – SINGLE MODE
- DMS — DYNAMIC MESSAGE SIGN (DMS)
- CNTRL — DMS CONTROLLER
- PTZ — CCTV CAMERA, PAN-TILT-ZOOM
- RPR — REMOTE POWER RELAY
- UPS — UNINTERRUPTIBLE POWER SUPPLY

NOTES:

1. DISTRIBUTION CABLE-FIBER (DCF) TUBES CONTAINING UNUSED FIBER STRANDS SHALL REMAIN UNCUT UNLESS OTHERWISE DIRECTED BY THE ENGINEER.
2. TRUNK CABLE-FIBER (TCF) SHALL HAVE SLACK STORED WITHIN THE SPLICE COMMUNICATIONS VAULT AND SHALL PASS THROUGH UNCUT.
3. UNSPLICED FIBER STRANDS SHALL BE COILED WITHIN SPLICE CLOSURE.

ITS-56

PARSONS

DESIGNED - YJ	REVISED -	
DRAWN - MT	REVISED -	
CHECKED - RCB/KA	REVISED -	
DATE - 11-22-2024	REVISED -	

STATE OF ILLINOIS
DEPARTMENT OF TRANSPORTATION

TRAFFIC SIGNAL FIBER SPLICING DIAGRAM (1 OF 2)
CERMAK RD / 22ND ST. AND 12TH AVENUE

N.T.S. | SHEET OF SHEETS | STA. TO STA.

F.A.P. RTE.	SECTION	COUNTY	TOTAL SHEETS	SHEET NO.
365	20-265-SUR, SW & TS	DUPAGE/COOK	492	395
		CONTRACT NO. 62N39		
		ILLINOIS	FED. AID PROJECT	

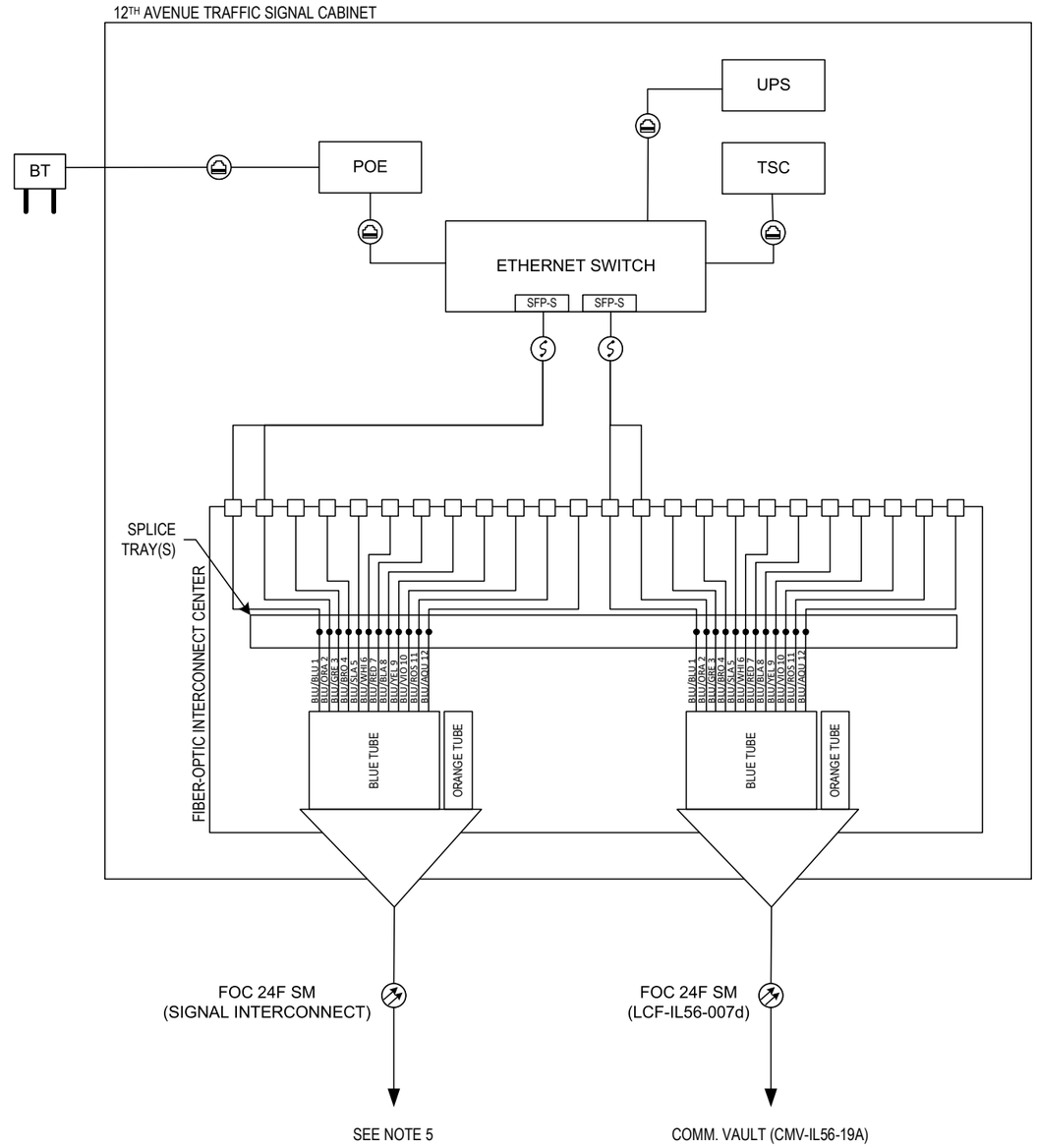

LEGEND

PROPOSED

- FIBER OPTIC CABLE (FOC)
- FIBER-OPTIC FUSION SPLICE
- FIBER PATCH PANEL PORT
- CAT 6 CABLE
- FIBER OPTIC PATCH CABLE, DUPLEX
- SFP-S — FIBER OPTIC TRANSCEIVER – SINGLE MODE
- BT — BLUETOOTH DETECTOR
- TSC — TRAFFIC SIGNAL CONTROLLER
- PTZ — CCTV CAMERA, PAN-TILT-ZOOM
- POE — POWER OVER ETHERNET INJECTOR
- UPS — UNINTERRUPTIBLE POWER SUPPLY

NOTES:

1. DISTRIBUTION CABLE-FIBER (DCF) TUBES CONTAINING UNUSED FIBER STRANDS SHALL REMAIN UNCUT UNLESS OTHERWISE DIRECTED BY THE ENGINEER.
2. TRUNK CABLE-FIBER (TCF) SHALL HAVE SLACK STORED WITHIN THE SPLICE COMMUNICATIONS VAULT AND SHALL PASS THROUGH UNCUT.
3. UNSPLICED FIBER STRANDS SHALL BE COILED WITHIN SPLICE TRAY.
4. FIBER-OPTIC CABLE DEPICTED IS GUIDANCE ONLY. ACTUAL FIBER-OPTIC CABLE FROM DMS CONTROLLER TO DMS DISPLAY SHALL BE IN ACCORDANCE WITH THE DMS MANUFACTURER'S REQUIREMENTS.
5. REFER TO TRAFFIC SIGNAL PLANS AND INTERCONNECT SHEETS FOR ADDITIONAL INFORMATION.

ITS-57

PARSONS

DESIGNED - YJ	REVISED -	
DRAWN - MT	REVISED -	
CHECKED - RCB/KA	REVISED -	
DATE - 11-22-2024	REVISED -	

STATE OF ILLINOIS
DEPARTMENT OF TRANSPORTATION

TRAFFIC SIGNAL FIBER SPLICING DIAGRAM (2 OF 2)
CERMAK RD / 22ND ST. AND 12TH AVENUE

N.T.S. | SHEET OF SHEETS | STA. TO STA.

F.A.P. RTE.	SECTION	COUNTY	TOTAL SHEETS	SHEET NO.
365	20-265-SUR, SW & TS	DUPAGE/COOK	492	396

CONTRACT NO. 62N39

ILLINOIS | FED. AID PROJECT

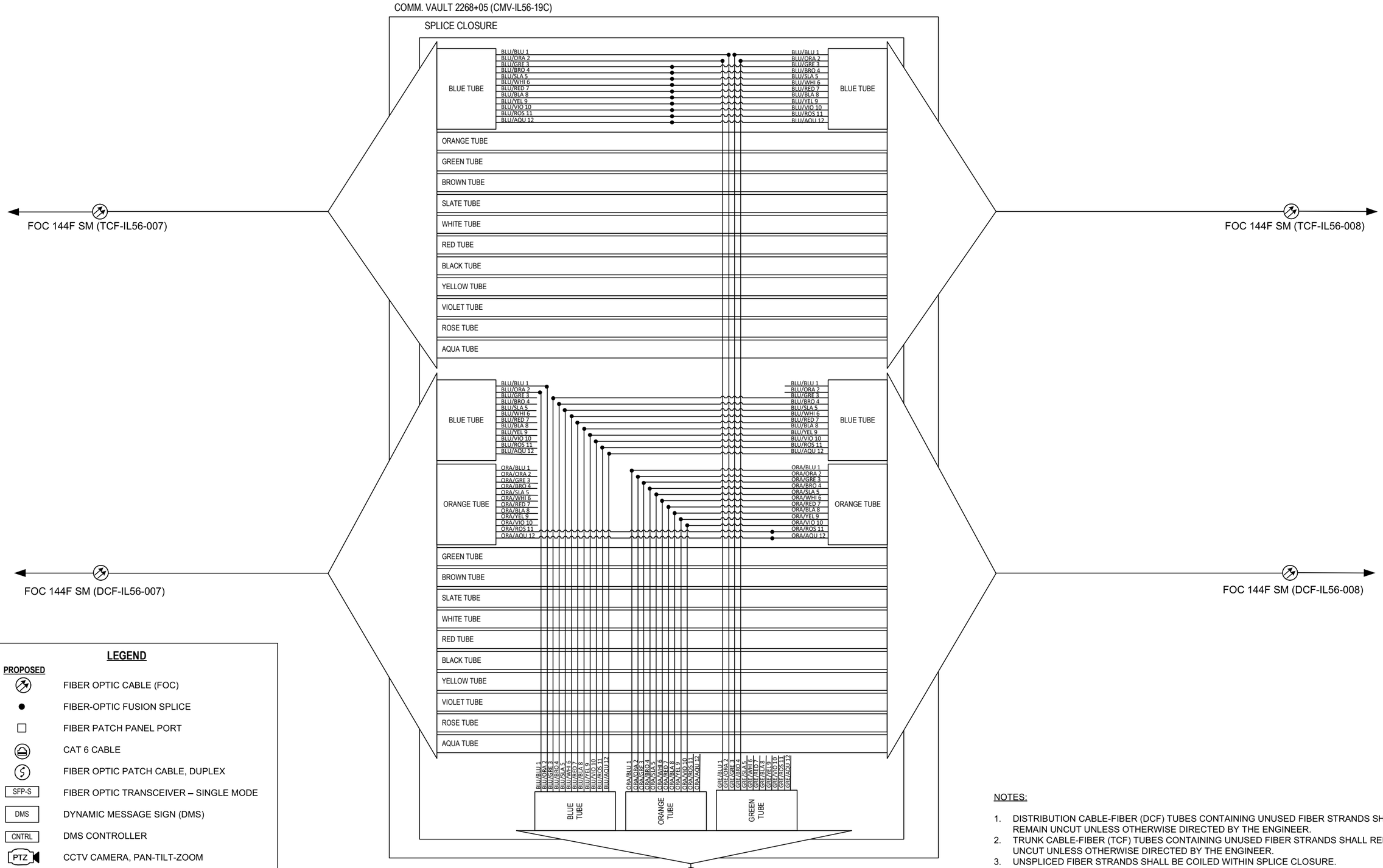

LEGEND

PROPOSED

- FIBER OPTIC CABLE (FOC)
- FIBER-OPTIC FUSION SPLICE
- FIBER PATCH PANEL PORT
- CAT 6 CABLE
- FIBER OPTIC PATCH CABLE, DUPLEX
- SFP-S — FIBER OPTIC TRANSCEIVER – SINGLE MODE
- DMS — DYNAMIC MESSAGE SIGN (DMS)
- CNTRL — DMS CONTROLLER
- PTZ — CCTV CAMERA, PAN-TILT-ZOOM
- RPR — REMOTE POWER RELAY
- UPS — UNINTERRUPTIBLE POWER SUPPLY

NOTES:

1. DISTRIBUTION CABLE-FIBER (DCF) TUBES CONTAINING UNUSED FIBER STRANDS SHALL REMAIN UNCUT UNLESS OTHERWISE DIRECTED BY THE ENGINEER.
2. TRUNK CABLE-FIBER (TCF) TUBES CONTAINING UNUSED FIBER STRANDS SHALL REMAIN UNCUT UNLESS OTHERWISE DIRECTED BY THE ENGINEER.
3. UNSPLICED FIBER STRANDS SHALL BE COILED WITHIN SPLICE CLOSURE.

ITS-58

PARSONS

DESIGNED - YJ	REVISED -		
DRAWN - MT	REVISED -		
CHECKED - RCB/KA	REVISED -		
DATE - 11-22-2024	REVISED -		

STATE OF ILLINOIS
DEPARTMENT OF TRANSPORTATION

TRAFFIC SIGNAL FIBER SPLICING DIAGRAM (1 OF 2)
CERMAK RD / 22ND ST. AND 1ST AVENUE (IL 171)

N.T.S. | SHEET OF SHEETS | STA. TO STA.

F.A.P. RTE.	SECTION	COUNTY	TOTAL SHEETS	SHEET NO.
365	20-265-SUR, SW & TS	DUPAGE/COOK	492	397
		CONTRACT NO. 62N39		
		ILLINOIS FED. AID PROJECT		

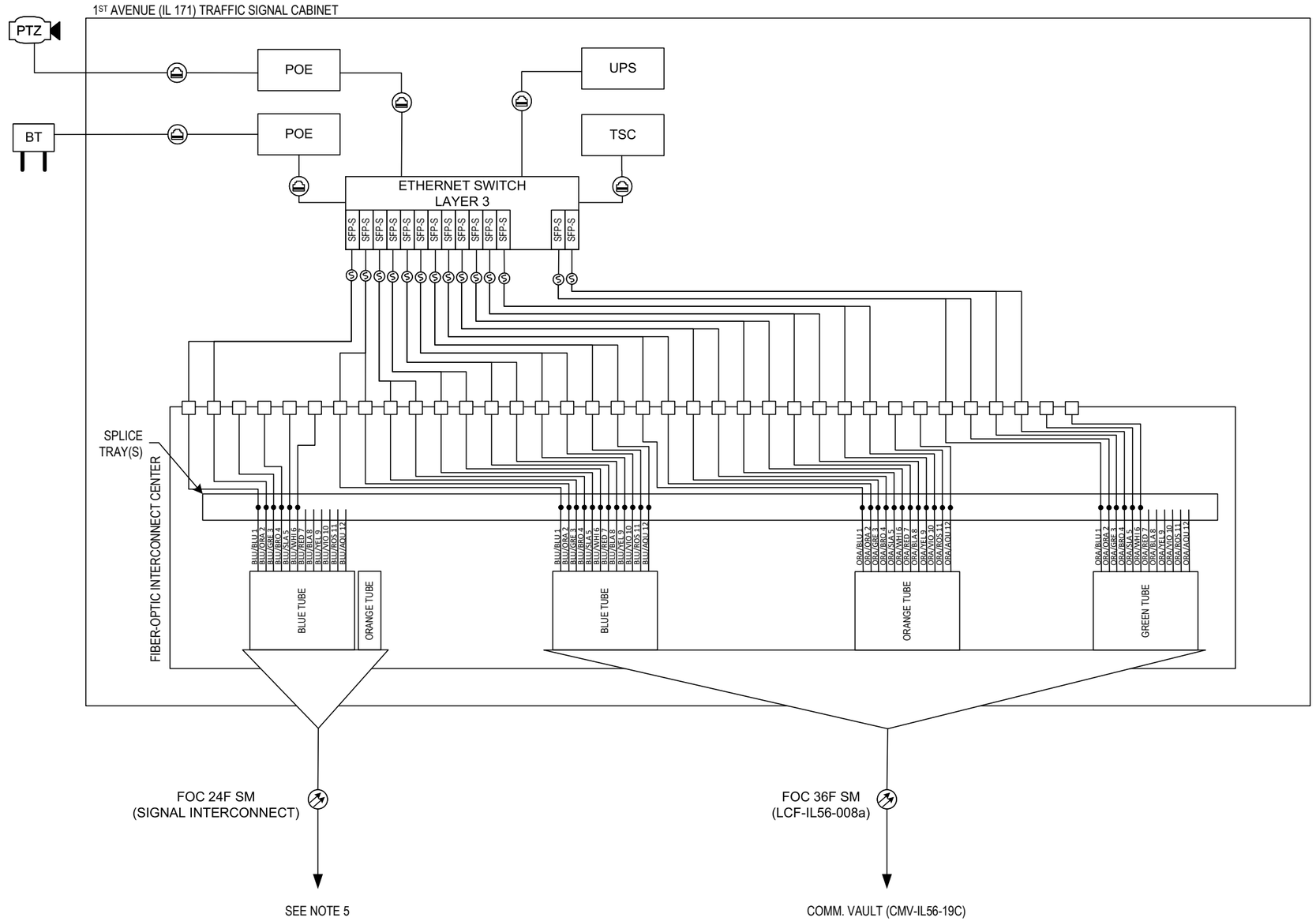

LEGEND

PROPOSED

- FIBER OPTIC CABLE (FOC)
- FIBER-OPTIC FUSION SPLICE
- FIBER PATCH PANEL PORT
- CAT 6 CABLE
- FIBER OPTIC PATCH CABLE, DUPLEX
- SFP-S — FIBER OPTIC TRANSCEIVER – SINGLE MODE
- BT — BLUETOOTH DETECTOR
- TSC — TRAFFIC SIGNAL CONTROLLER
- PTZ — CCTV CAMERA, PAN-TILT-ZOOM
- POE — POWER OVER ETHERNET INJECTOR
- UPS — UNINTERRUPTIBLE POWER SUPPLY

NOTES:

1. DISTRIBUTION CABLE-FIBER (DCF) TUBES CONTAINING UNUSED FIBER STRANDS SHALL REMAIN UNCUT UNLESS OTHERWISE DIRECTED BY THE ENGINEER.
2. TRUNK CABLE-FIBER (TCF) TUBES CONTAINING UNUSED FIBER STRANDS SHALL REMAIN UNCUT UNLESS OTHERWISE DIRECTED BY THE ENGINEER.
3. UNSPLICED FIBER STRANDS SHALL BE COILED WITHIN SPLICE TRAY.
4. FIBER-OPTIC CABLE DEPICTED IS GUIDANCE ONLY. ACTUAL FIBER-OPTIC CABLE FROM DMS CONTROLLER TO DMS DISPLAY SHALL BE IN ACCORDANCE WITH THE DMS MANUFACTURER'S REQUIREMENTS.
5. REFER TO TRAFFIC SIGNAL PLANS AND INTERCONNECT SHEETS FOR ADDITIONAL INFORMATION.

ITS-59

PARSONS

DESIGNED	- YJ	REVISED	-
DRAWN	- MT	REVISED	-
CHECKED	- RCB/KA	REVISED	-
DATE	- 11-22-2024	REVISED	-

STATE OF ILLINOIS
DEPARTMENT OF TRANSPORTATION

TRAFFIC SIGNAL FIBER SPLICING DIAGRAM (2 OF 2)
CERMAK RD / 22ND ST. AND 1ST AVENUE (IL 171)

N.T.S. | SHEET OF SHEETS | STA. TO STA.

F.A.P. RTE.	SECTION	COUNTY	TOTAL SHEETS	SHEET NO.
365	20-265-SUR, SW & TS	DUPAGE/COOK	492	398

CONTRACT NO. 62N39

ILLINOIS | FED. AID PROJECT

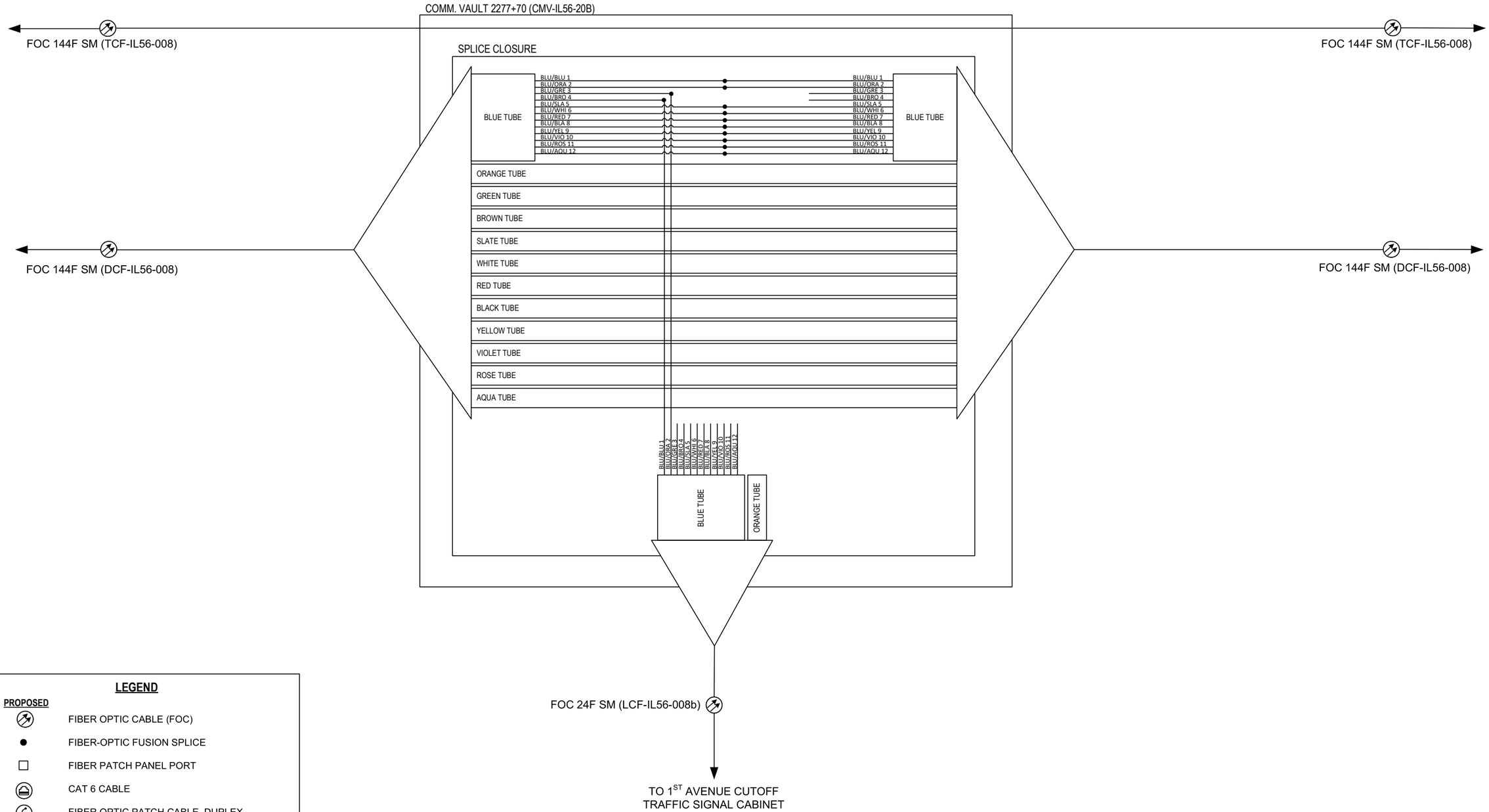

LEGEND

PROPOSED

- FIBER OPTIC CABLE (FOC)
- FIBER-OPTIC FUSION SPLICE
- FIBER PATCH PANEL PORT
- CAT 6 CABLE
- FIBER OPTIC PATCH CABLE, DUPLEX
- SFP-S — FIBER OPTIC TRANSCEIVER – SINGLE MODE
- DMS — DYNAMIC MESSAGE SIGN (DMS)
- CNTRL — DMS CONTROLLER
- PTZ — CCTV CAMERA, PAN-TILT-ZOOM
- RPR — REMOTE POWER RELAY
- UPS — UNINTERRUPTIBLE POWER SUPPLY

NOTES:

1. DISTRIBUTION CABLE-FIBER (DCF) TUBES CONTAINING UNUSED FIBER STRANDS SHALL REMAIN UNCUT UNLESS OTHERWISE DIRECTED BY THE ENGINEER.
2. TRUNK CABLE-FIBER (TCF) SHALL HAVE SLACK STORED WITHIN THE SPLICE COMMUNICATIONS VAULT AND SHALL PASS THROUGH UNCUT.
3. UNSPLICED FIBER STRANDS SHALL BE COILED WITHIN SPLICE CLOSURE.

ITS-60

PARSONS

DESIGNED - YJ	REVISED -	
DRAWN - MT	REVISED -	
CHECKED - RCB/KA	REVISED -	
DATE - 11-22-2024	REVISED -	

STATE OF ILLINOIS
DEPARTMENT OF TRANSPORTATION

TRAFFIC SIGNAL FIBER SPLICING DIAGRAM (1 OF 2)
CERMAK RD / 22ND ST. AND 1ST AVENUE CUTOFF

N.T.S. | SHEET OF SHEETS | STA. TO STA.

F.A.P. RTE.	SECTION	COUNTY	TOTAL SHEETS	SHEET NO.
365	20-265-SUR, SW & TS	DUPAGE/COOK	492	399
		CONTRACT NO. 62N39		
		ILLINOIS	FED. AID PROJECT	

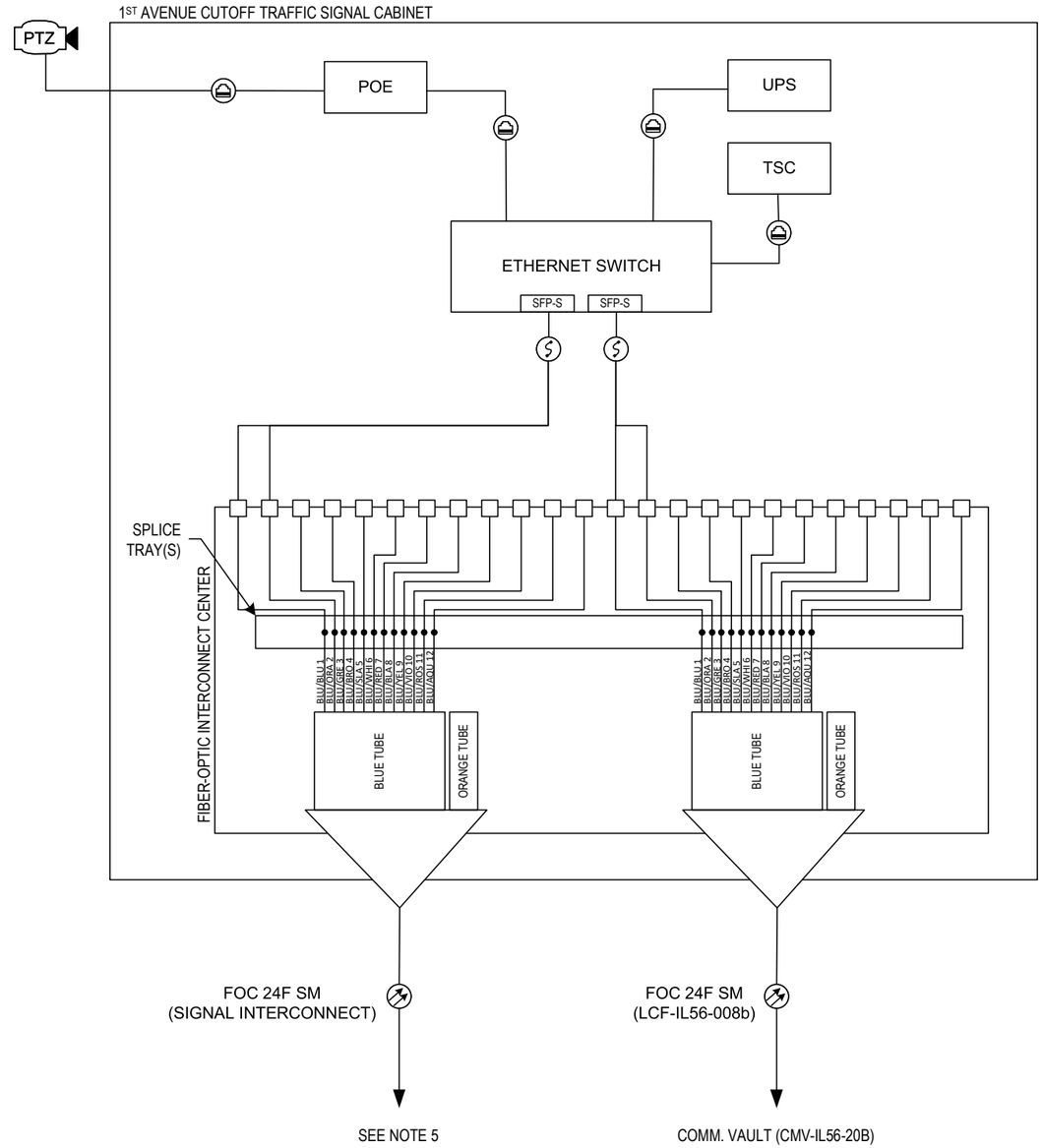

LEGEND

PROPOSED

- FIBER OPTIC CABLE (FOC)
- FIBER-OPTIC FUSION SPLICE
- FIBER PATCH PANEL PORT
- CAT 6 CABLE
- FIBER OPTIC PATCH CABLE, DUPLEX
- SFP-S — FIBER OPTIC TRANSCEIVER – SINGLE MODE
- BT — BLUETOOTH DETECTOR
- TSC — TRAFFIC SIGNAL CONTROLLER
- PTZ — CCTV CAMERA, PAN-TILT-ZOOM
- POE — POWER OVER ETHERNET INJECTOR
- UPS — UNINTERRUPTIBLE POWER SUPPLY

NOTES:

1. DISTRIBUTION CABLE-FIBER (DCF) TUBES CONTAINING UNUSED FIBER STRANDS SHALL REMAIN UNCUT UNLESS OTHERWISE DIRECTED BY THE ENGINEER.
2. TRUNK CABLE-FIBER (TCF) SHALL HAVE SLACK STORED WITHIN THE SPLICE COMMUNICATIONS VAULT AND SHALL PASS THROUGH UNCUT.
3. UNSPLICED FIBER STRANDS SHALL BE COILED WITHIN SPLICE TRAY.
4. FIBER-OPTIC CABLE DEPICTED IS GUIDANCE ONLY. ACTUAL FIBER-OPTIC CABLE FROM DMS CONTROLLER TO DMS DISPLAY SHALL BE IN ACCORDANCE WITH THE DMS MANUFACTURER'S REQUIREMENTS.
5. REFER TO TRAFFIC SIGNAL PLANS AND INTERCONNECT SHEETS FOR ADDITIONAL INFORMATION.

ITS-61

PARSONS

DESIGNED	- YJ	REVISED	-
DRAWN	- MT	REVISED	-
CHECKED	- RCB/KA	REVISED	-
DATE	- 11-22-2024	REVISED	-

STATE OF ILLINOIS
DEPARTMENT OF TRANSPORTATION

TRAFFIC SIGNAL FIBER SPLICING DIAGRAM (2 OF 2)
CERMAK RD / 22ND ST. AND 1ST AVENUE CUTOFF

N.T.S. | SHEET OF SHEETS | STA. TO STA.

F.A.P. RTE.	SECTION	COUNTY	TOTAL SHEETS	SHEET NO.
365	20-265-SUR, SW & TS	DUPAGE/COOK	492	400

CONTRACT NO. 62N39

ILLINOIS | FED. AID PROJECT