F.A.P. RTE.	SECTION	COUNTY	TOTAL SHEETS	SHEET NO.
693	20-00196-01-RS	TAZEWELL	136	1
	ILLINOIS	CONTRACT NO. 89859		

INDEX OF SHEETS 06-13-2025 LETTING ITEM 168

1	COVER
2-3	GENERAL NOTES
4-15	SUMMARY OF QUANTITIES
16-18	TYPICAL SECTIONS
19-20	SCHEDULE OF QUANTITIES
21	ALIGNMENT, BENCHMARKS, AND TIES
22-35	STAGING PLAN
36-38	REMOVAL PLAN
39-43	PLAN AND PROFILE
44-46	EROSION CONTROL PLAN
47-50	DRAINAGE PLANS
51-65	WATER MAIN PLANS
66-68	RIGHT OF WAY PLANS
69-73	INTERSECTION DETAIL
74-78	SIDEWALK RAMP DETAILS
79-81	JOINTING PLANS
82-84	PAVEMENT MARKING AND SIGNAGE PLAN
85-92	TRAFFIC SIGNAL PLANS
93-99	LIGHTING PLANS AND DETAILS
100	MISCELLANEOUS DETAILS
101	CONCRETE STEPS DETAILS
102-104	RETAINING WALL DETAILS
105	SIDEWALK SIDE CURB APPROACH NOSE DETAIL
106-122	IDOT DISTRICT 4 STANDARD DRAWINGS
123-136	CROSS SECTIONS

STATE OF ILLINOIS
DEPARTMENT OF TRANSPORTATION
DIVISION OF HIGHWAYS

PLANS FOR PROPOSED
COURT STREET REHABILITATION

COURT STREET (FAP 693)
8TH ST. TO 10TH ST.
SECTION 20-00196-01-RS
CITY OF PEKIN
TAZEWELL COUNTY

PROJECT NO. J35T(004)
JOB NO. C-94-051-24

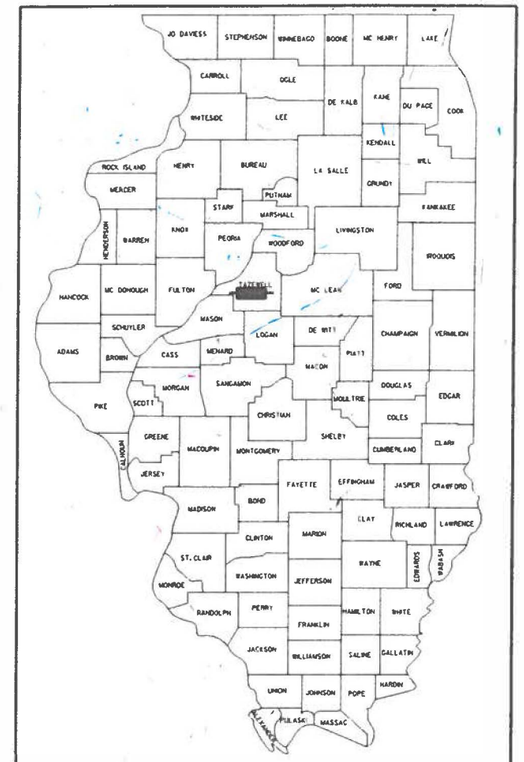

LOCATION OF SECTION INDICATED THUS:-

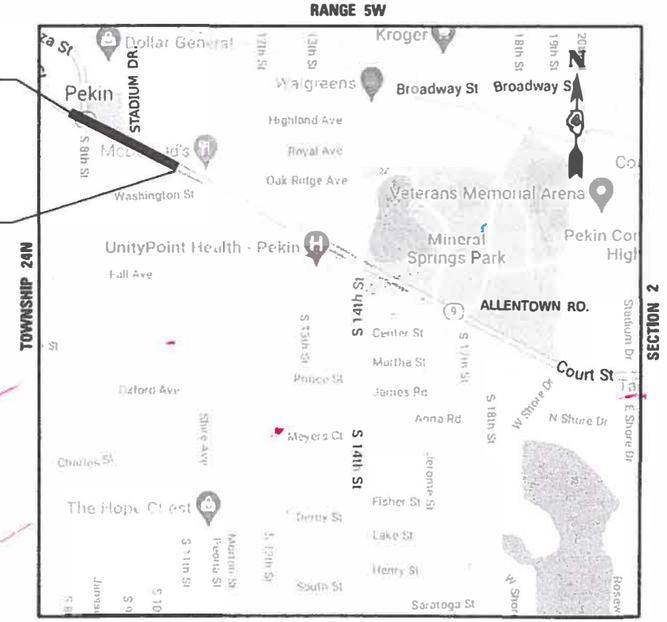

NOT TO SCALE

GROSS LENGTH = 1208 FT. = 0.229 MILE
NET LENGTH = 1208 FT. = 0.229 MILE

LICENSED PROFESSIONAL ENGINEER — JEREMY F. COERS 062-059902 — STATE OF ILLINOIS
DATE SIGNED : 10/24/24
LIC. EXP. DATE : 11/30/25

LICENSED PROFESSIONAL ENGINEER — TODD W. ARTZ 062-057838 — STATE OF ILLINOIS
DATE SIGNED : 10/24/24
LIC. EXP. DATE : 11/30/25
TRAFFIC SIGNAL PLANS

LICENSED PROFESSIONAL ENGINEER — DAVID B. HOOTS 062-055737 — STATE OF ILLINOIS
DATE SIGNED : 10/24/24
LIC. EXP. DATE : 11/30/25
DRAINAGE

LICENSED PROFESSIONAL ENGINEER — RYAN D. NATION 062-055391 — STATE OF ILLINOIS
DATE SIGNED : 10/24/24
LIC. EXP. DATE : 11/30/25
LIGHTING PLAN

PROJECT ENGINEER: JEREMY COERS, P.E.
PROJECT MANAGER: CINDY LOOS, P.E.

J.U.L.I.E.
JOINT UTILITY LOCATION INFORMATION FOR EXCAVATION
1-800-892-0123
OR 811

0 5' 10' 15' — 1" = 5'
0 10' 20' 30' — 1" = 10'
0 50' 100' — 1" = 40'
50' 100' — 1" = 20'

FULL SIZE PLANS HAVE BEEN PREPARED USING STANDARD ENGINEERING SCALES. REDUCED SIZED PLANS WILL NOT CONFORM TO STANDARD SCALES. IN MAKING MEASUREMENTS ON REDUCED PLANS, THE ABOVE SCALES MAY BE USED.

CONTRACT NO. 89859
CAT NO. 036497-00D

ADT (2015) = 18,500, ADT (2045) = 21,650, SU=0%, MU=7.0%
HIGHWAY CLASS: I
FUNCTIONAL CLASSIFICATION: OTHER PRINCIPAL ARTERIAL
DESIGN SPEED: 35 MPH
POSTED SPEED LIMIT: 35 MPH
DESIGN POLICY: BLR MANUAL - 3R POLICY

DATE: 10/24/2024

© Copyright Hanson Professional Services Inc. 2024

HANSON
Hanson Professional Services Inc.
7625 N. University St., Suite 200
Peoria, Illinois 61614
Offices Nationwide

PRINTED BY THE AUTHORITY OF THE STATE OF ILLINOIS

APPROVED OCTOBER 24TH 20 24
CITY ENGINEER - CITY OF PEKIN

PASSED 10-29 20 24
DISTRICT FOUR ENGINEER OF LOCAL ROADS & STREETS

Releasing For Bid Based on Limited Review October 30 20 24
REGION THREE ENGINEER

STATE OF ILLINOIS
DEPARTMENT OF TRANSPORTATION

GENERAL NOTES

1. THE CONSTRUCTION SHALL BE GOVERNED BY THE "STANDARD SPECIFICATIONS FOR ROAD AND BRIDGE CONSTRUCTION IN ILLINOIS", 2022 EDITION AND "SUPPLEMENTAL SPECIFICATIONS AND RECURRING SPECIAL PROVISIONS", CURRENT EDITION.

2. ALL REFERENCES TO THE "DEPARTMENT" OR "ENGINEER" IN THE I.D.O.T. STANDARD SPECIFICATIONS SHALL BE CONSTRUED TO MEAN THE OWNER, HIS AGENT OR I.D.O.T. AS APPROPRIATE.

3. WHERE SECTION, SUB-SECTION, SUBDIVISION, OR PROPERTY MONUMENTS ARE ENCOUNTERED, THE ENGINEER SHALL BE NOTIFIED BEFORE SUCH MONUMENTS ARE REMOVED. THE CONTRACTOR SHALL PROTECT AND PRESERVE ALL PROPERTY MARKERS UNTIL AN OWNER OR AUTHORIZED SURVEYOR HAS WITNESSED OR REFERENCED THEIR LOCATION.

4. THE CONTRACTOR SHALL FIELD VERIFY ALL DIMENSIONS AND EXISTING CONDITIONS PRIOR TO CONSTRUCTION AND NOTIFY THE ENGINEER OF ANY DISCREPANCY IMMEDIATELY.

5. THE CONTRACTOR SHALL BE RESPONSIBLE FOR REPAIRS TO ANY UTILITY LINES AND EXISTING IMPROVEMENTS TO REMAIN THAT ARE DAMAGED AS A RESULT OF THE WORK.

6. ALL SECTIONS, DETAILS AND NOTES SHOWN ON THE DRAWINGS ARE INTENDED TO BE TYPICAL AND SHALL APPLY TO SIMILAR SITUATIONS ELSEWHERE, UNLESS OTHERWISE SHOWN.

7. ALL THE ELEVATIONS, STATIONS, AND OFFSETS SHOWN ON THE PLANS SHALL BE FIELD VERIFIED BY THE CONTRACTOR PRIOR TO CONSTRUCTION.

8. ALL REMOVALS SHALL BE FULL DEPTH SAW CUT AT THE LIMITS TO BE REMOVED. THE COST OF THE SAW CUT IS INCLUDED IN ALL REMOVALS.

9. THE CONTRACTOR IS RESPONSIBLE FOR OBTAINING ALL NECESSARY PERMITS.

10. EXCESS MATERIAL, IF NOT USED FOR OTHER ON-SITE PURPOSES, SHALL BE HAULED OFF-SITE AT CONTRACTOR'S EXPENSE.

11. THE WORK AREA SHALL BE POSITIVELY DRAINED DURING CONSTRUCTION. FINAL GRADES SHALL BE PROTECTED AGAINST DAMAGE FROM EROSION, SEDIMENTATION, AND TRAFFIC.

12. THE CONTRACTOR SHALL USE ANY ON SITE MATERIAL DEEMED SUITABLE BY THE ENGINEER BEFORE ANY NEW FILL IS HAULED TO THE SITE.

13. CONTRACTORS BIDDING THIS PROJECT SHALL VISIT THE SITE BEFORE BIDDING.

14. THE CONTRACTOR SHALL FIELD VERIFY EXISTING DRAINAGE STRUCTURE CONDITIONS, LOCATIONS, PIPE SIZES, INVERTS, AND ELEVATIONS PRIOR TO ORDERING ANY PROPOSED STRUCTURES. THE CONTRACTOR SHALL NOTIFY THE ENGINEER OF ANY DISCREPANCIES PRIOR TO ORDERING.

15. FERTILIZER SHALL BE APPLIED TO SEEDED AREAS AT A RATE OF 270 LB PER ACRE AT A 1:1:1 RATIO OF NITROGEN, PHOSPHORUS, AND POTASSIUM FERTILIZER NUTRIENTS AS SPECIFIED IN THE STANDARD SPECIFICATIONS.

16. CONTRACTOR SHALL BE RESPONSIBLE FOR LOCATING ALL EXISTING UNDERGROUND UTILITIES PRIOR TO EXCAVATION.

17. CONTRACTOR SHALL BE REQUIRED TO PROTECT OPEN EXCAVATIONS IN ACCORDANCE WITH ALL APPLICABLE REGULATIONS.

18. THE CONTRACTOR SHALL BE RESPONSIBLE FOR THE IMMEDIATE REMOVAL OF ANY MAINTENANCE OF TRAFFIC PROTECTIVE DEVICES REQUIRED FOR OPERATIONS THAT WOULD INTERFERE WITH SNOW REMOVAL OPERATIONS PERFORMED BY THE DEPARTMENT.

19. THE CONTRACTOR IS ADVISED AN ADJACENT SECTION OF COURT STREET FROM 10TH STREET TO STADIUM DRIVE MAY BE UNDER CONSTRUCTION AT THE SAME TIME AS THIS PROJECT. ADVANCED WARNING FOR TRAFFIC CONTROL WILL BE COORDINATED BY THE CONTRACTOR IN THE EVENT THAT BOTH PROJECTS ARE SIMULTANEOUSLY BUILT.

20. ELEVATIONS LISTED ON DETAIL SHEETS WITH THE NOTE "MATCH EXISTING" ARE BASED ON SURVEY INFORMATION AVAILABLE DURING DESIGN. IF THE ELEVATIONS VARY FROM ACTUAL FIELD CONDITIONS WHERE THE DESIGN JOINS EXISTING, THE ACTUAL ELEVATION SHALL BE USED FOR LAYOUT PURPOSES.

IDOT DISTRICT 4 GENERAL NOTES

107.00 COMMITMENTS

COMMITMENTS ARE NOT TO BE ALTERED WITHOUT THE WRITTEN APPROVAL OF ALL PARTIES TO WHICH THE COMMITMENT WAS MADE.

1. AT 910 COURT STREET, THE CONTRACTOR WILL RECONSTRUCT THE ENTRANCES HALF AT A TIME OR REPLACE EACH WHILE KEEPING THE OTHER ENTRANCE OPEN.

2. AT 818 COURT STREET, ACCESS WILL ALWAYS BE AVAILABLE DURING CONSTRUCTION. THE ENTRANCE OFF 9TH STREET WHILE BEING WORKED ON, WILL BE CLOSED FOR A TWO-WEEK PERIOD WEATHER PERMITTING. DURING THIS TIME THE COURT STREET ENTRANCE WILL REMAIN OPEN. WHILE WORKING ON THE COURT STREET ENTRANCE, THE 9TH STREET ENTRANCE WILL REMAIN OPEN. CONTRACTOR SHALL PROVIDE SIGNAGE DURING CONSTRUCTION NOTIFYING THE PUBLIC OF ACCESS. CONTRACTOR TO PROVIDE THW CITY AND OWNER A TWO-WEEK NOTICE PRIOR TO WORKING ON THE PREMISES.

3. AT 1013 COURT STREET, CONTRACTOR WILL NOT STORE CONSTRUCTION EQUIPMENT, MATERIAL, OR VEHICLES ON THE PROPERTY EXCEPT AS CUSTOMERS OF THE BUSINESS. CONTRACTOR SHALL PROVIDE "OPEN DURING CONSTRUCTION" SIGNAGE TO BE PLACED IN EASEMENT AREAS DURING CONSTRUCTION. CONTRACTOR SHALL NOT CLOSE THE TWO ENTRANCES ALONG COURT STREET AT THE SAME TIME. THE ENTRANCES WILL BE RECONSTRUCTED SEPARATELY. ANY DAMAGE TO PAVING OR LANDSCAPING AS A RESULT OF CONSTRUCTION WILL BE REPLACED AND RESTORED TO THE SAME OR BETTER CONDITION AS WAS IN PLACE WHEN THE CONSTRUCTION ACTIVITIES BEGAN.

4. AT 901 COURT STREET, A CURB CUT WILL BE MADE FOR A 12' ENTRANCE, APPROXIMATELY 5' FROM THE EASTERLY PROPERTY LINE ALONG 901 COURT ST. FOR THE DONATION OF PROPERTY RIGHTS PREVIOUSLY MAILED ON APRIL 17, 2024, FOR THE COURT ST. PROJECT.

107.09 PROPERTY OWNER ACCESS REQUIREMENT

ACCESS MUST BE MAINTAINED TO ALL EXISTING PROPERTIES DURING CONSTRUCTION PER ARTICLE 107.09 UNLESS ARRANGEMENTS ARE MADE IN WRITING BY THE CONTRACTOR WITH THE PROPERTY OWNERS WITH A COPY TO THE ENGINEER FOR SHORT-TERM CLOSURES.

204.00 ENVIRONMENTAL REVIEWS

PRIOR TO THE USE OF ANY PROPOSED BORROW AREAS, USE AREAS (TEMPORARY ACCESS ROADS, DETOURS, RUN-AROUNDS, ETC.) AND/OR WASTE AREAS, THE CONTRACTOR SHALL FILE THE REQUIRED ENVIRONMENTAL RESOURCE REQUEST SURVEYS ACCORDING TO SECTION 107.22 OF THE STANDARD SPECIFICATIONS. THESE SURVEYS ARE REQUIRED IN ORDER FOR THE DEPARTMENT TO CONDUCT CULTURAL AND BIOLOGICAL RESOURCE SURVEYS FOR THE PROPOSED SITE.

THE REQUIRED ENVIRONMENTAL RESOURCE DOCUMENTATION SHALL INCLUDE THE FOLLOWING:

- BDE FORM 2289 (CULTURAL AND NATURAL RESOURCES REVIEW OF BORROW AREAS)
- BDE FORM 2290 (WASTE/USE AREA REVIEW)
- A LOCATION MAP SHOWING THE SIZE LIMITS AND LOCATION OF THE USE AREA
- COLOR PHOTOGRAPHS DEPICTING THE USE AREA
- BORROW AREA ENTRY AGREEMENT FORM - D4 PI0101

PRIOR TO ANY WASTE MATERIALS BEING REMOVED FROM THE CONSTRUCTION SITE THE REQUIRED ENVIRONMENTAL RESOURCE SURVEYS SHALL BE OBTAINED AND FILED BY THE CONTRACTOR. EXCESS WASTE PRODUCTS REMOVED FROM THE CONSTRUCTION SITE SHALL BE DISPOSED OF AS REQUIRED IN SECTION 202.03 OF THE STANDARD SPECIFICATIONS.

ANY PROTRUDING METAL BARS SHALL BE REMOVED PRIOR TO THE DISPOSAL OF BROKEN CONCRETE AT APPROVED DISPOSAL SITES. THE COST ASSOCIATED WITH THIS WORK SHALL BE INCLUDED IN THE VARIOUS REMOVAL PAY ITEM.

PLEASE NOTE THAT A MINIMUM OF FOUR WEEKS SHALL BE ALLOWED FOR THE DISTRICT TO OBTAIN THE REQUIRED WASTE SITE ENVIRONMENTAL CLEARANCES AND SIX WEEKS FOR THE REQUIRED BORROW SITE ENVIRONMENTAL CLEARANCES.

406.05 POLYMERIZED BITUMINOUS MATERIALS (TACK COAT) RATES

SURFACE TYPE	RESIDUAL RATE
MILLED (HMA OR PCC)	0.08 LB/SF
EXISTING PAVEMENT	0.08 LB/SF
FOG COAT (BETWEEN LIFTS)	0.08 LB/SF

542.00 ORDERING LENGTH CONFIRMATION - DRAINAGE ITEMS

THE CONTRACTOR SHALL CONSULT WITH THE ENGINEER IN REGARD TO THE EXACT LENGTH OF THE BOX/PIPE CULVERTS, STORM SEWERS, AND/OR PIPE DRAINS REQUIRED PRIOR TO ORDERING THESE ITEMS.

602.00 EXISTING DRAINAGE PIPES CONNECTED TO NEW STRUCTURES

IN ACCORDANCE WITH SECTION 602 OF THE STANDARD SPECIFICATIONS, THE CONNECTING OF EXISTING DRAIN TILES, PIPE CULVERTS, OR STORM SEWERS TO THE PROPOSED DRAINAGE SYSTEM STRUCTURES WILL NOT BE PAID FOR SEPARATELY BUT SHALL BE CONSIDERED AS INCLUDED IN THE PAY ITEMS PROVIDED.

THE FOLLOWING MIXTURE REQUIREMENTS ARE APPLICABLE FOR THIS PROJECT:

LOCATION:	COURT STREET	10TH STREET
MIXTURE USE(S):	INCIDENTAL HMA ENTRANCES	SURFACE COURSE
PG:	PG 58-28	SBS 76-28
DESIGN AIR VOIDS:	4.0% @ N-50	4.0% @ N-50
MIXTURE COMPOSITION: (GRADATION MIXTURE)	IL 9.5	IL 9.5
FRICTION AGGREGATE:	MIXTURE C	MIXTURE D
MIXTURE WEIGHT:	112 LB/SQ YD/IN	112 LB/SQ YD/IN
QUALITY MANAGEMENT PROGRAM:	QC/QA	QC/QA
SUBLOT SIZE:	N/A	N/A

NOTES:

1. INDIVIDUAL LIFT THICKNESSES OF EACH MIX WILL BE NO LESS THAN THREE (3) TIMES NOMINAL MAXIMUM AGGREGATE SIZE AND NO MORE THAN FIVE (5) TIMES NOMINAL AGGREGATE MAXIMUM SIZE, UNLESS OTHERWISE APPROVED BY THE ENGINEER.

2. FOR DESIGN PURPOSES, MIXTURE WEIGHT FOR ALL MIXES IS DETERMINED TO BE 112.0 LB./SQ. YARD/IN., UNLESS OTHERWISE NOTED.

3. SUBLOT SIZES FOR PFP AND QCP MIXES WILL BE 1,000 TONS, UNLESS OTHERWISE AGREED TO BY THE ENGINEER AND THE PAVING CONTRACTOR.

606.14 TRANSITION PAYMENT METHOD - NEW/OLD CONSTRUCTION

TEN FEET (10 FT.) (3 M) TRANSITION SHALL BE USED TO MATCH PROPOSED ITEMS OF WORK TO EXISTING ITEMS IN THE FIELD UNLESS OTHERWISE SHOWN. THE TRANSITION SHALL BE PAID FOR AT THE CONTRACT UNIT PRICE FOR THE PROPOSED ITEM OF WORK SPECIFIED.

© Copyright Hanson Professional Services Inc. 2025

HANSON
Hanson Professional Services Inc.

DESIGNED	JFC	10/3/2024 12:00:00 AM
DRAWN	RLA	10/3/2024 12:00:00 AM
REVIEWED	MGD	10/3/2024 12:00:00 AM

MODEL: General Notes
FILE NAME: I:\13Jobs\13L0177A\CAD\RoadSheet\Plan-Set 3 (8th-10th)\sht-gennotes01.dgn

LIST OF STANDARDS

000001-08	STANDARD SYMBOLS, ABBREVIATIONS AND PATTERNS
001001-02	AREAS OF REINFORCEMENT BARS
280001-07	TEMPORARY EROSION CONTROL SYSTEMS
420001-10	PAVEMENT JOINTS
424001-12	PERPENDICULAR CURB RAMPS FOR SIDEWALKS
424011-05	CORNER PARALLEL CURB RAMPS FOR SIDEWALKS
424021-07	DEPRESSED CORNER FOR SIDEWALKS
424026-04	ENTRANCE/ALLEY PEDESTRIAN CROSSINGS
602301-04	INLET-TYPE A
602306-03	INLET-TYPE B
602401-07	PRECAST MANHOLE TYPE A 4' (1.22 m) DIAMETER
602402-03	PRECAST MANHOLE TYPE A 5' (1.52 m) DIAMETER
602406-11	PRECAST MANHOLE TYPE A 6' (1.83 m) DIAMETER
602601-06	PRECAST REINFORCED CONCRETE FLAT SLAB TOP
602701-02	MANHOLE STEPS
604001-05	FRAME AND LIDS TYPE 1
604036-03	GRATE TYPE 8
604051-04	FRAME AND GRATE TYPE 11
606001-08	CONCRETE CURB TYPE B AND COMBINATION CONCRETE CURB AND GUTTER
701301-04	LANE CLOSURE, 2L, 2W, SHORT TIME OPERATIONS
701311-03	LANE CLOSURE 2L, 2W, MOVING OPERATIONS - DAY ONLY
701501-06	URBAN LANE CLOSURE, 2L, 2W, UNDIVIDED
701602-10	URBAN LANE CLOSURE, MULTILANE, 2W WITH BIDIRECTIONAL LEFT TURN LANE
701611-01	URBAN HALF ROAD CLOSURE, MULTILANE, 2W WITH MOUNTABLE MEDIAN
701701-10	URBAN LANE CLOSURE, MULTILANE INTERSECTION
701801-06	SIDEWALK, CORNER OR CROSSWALK CLOSURE
701901-10	TRAFFIC CONTROL DEVICES
720001-01	SIGN PANEL MOUNTING DETAILS
720006-04	SIGN PANEL ERECTION DETAILS
720016-04	MAST ARM MOUNTED STREET NAME SIGNS
728001-01	TELESCOPING STEEL SIGN SUPPORT
780001-05	TYPICAL PAVEMENT MARKINGS
805001-01	ELECTRICAL SERVICE INSTALLATION DETAILS
814001-03	HANDHOLES
814006-03	DOUBLE HANDHOLES
821101-03	LUMINAIRE WIRING IN POLE
825021-04	LIGHTING CONTROLLER BASE MOUNTED, 240V
830001-03	LIGHT POLE ALUMINUM MAST ARM
836001-05	LIGHT POLE FOUNDATION
838001-01	BREAKAWAY DEVICES
857001-01	STANDARD PHASE DESIGNATION DIAGRAMS AND PHASE SEQUENCES
862001-01	UNINTERRUPTABLE POWER SUPPLY (UPS)
873001-02	TRAFFIC SIGNAL GROUNDING & BONDING
877001-08	STEEL MAST ARM ASSEMBLY AND POLE 16' THROUGH 55'
877011-10	STEEL COMB. MAST ARM ASSEMBLY AND POLE 16' THROUGH 55'
878001-11	CONCRETE FOUNDATION DETAILS
880006-01	TRAFFIC SIGNAL MOUNTING DETAILS

IDOT DISTRICT 4 STANDARDS

406101-D4	BUTT JOINTS
423101-D4	URBAN ENTRANCES, ACCESSIBLE TO THE DISABLED FOR CURBLINE SIDEWALKS
423121-D4	URBAN ENTRANCES, SPECIAL DESIGN FOR CLOSELY SPACED ENTRANCES
424106-D4	COMBINATION CONCRETE CURB-SIDEWALK, 4" (SPECIAL)
510001-D4	PIPE HANDRAIL FASTENING
602001-D4	INLETS, TYPE G-1
602006-D4	INLETS, TYPE G-1, SPECIAL
602026-D4	INLET-MANHOLE, TYPE G-1, SPECIAL
602101-D4	PRECAST REINFORCED CONCRETE FLAT SLAB TOP FOR INLET-MANHOLE, TYPE G-1 AND G-1, SPECIAL
604001-D4	FRAME & GRATES FOR TYPE G-1 AND TYPE G-1, SPECIAL DRAINAGE STRUCTURES
660101-D4	MODULAR RETAINING WALL SYSTEM DETAIL
780001-D4	TYPICAL PAVEMENT MARKINGS

UTILITIES

AMEREN ELECTRIC
ATTN: BOB KUPPER
(309) 712-5471
rkupper@ameren.com

AMEREN GAS
ATTN: ZACH WILSON
(309) 645-4458
zwilson@ameren.com

COMCAST
ATTN: PAUL NASH
(309) 643-3385
Paul_Nash@comcast.com

BRIGHTSPEED
ATTN: JASON M. JOHNSON
(309) 371-3519
jason.johnson@brightspeed.com

ILLINOIS AMERICAN WATER COMPANY
ATTN: JOSH HARKEN
(309) 360-2037
joshua.harken@amwater.com

I3 BROADBAND
ATTN: Engineering
engineering@i3broadband.net

BLUEBIRD NETWORK
ATTN: PATRICK HIGGINS
(314) 458-7922
Patrick.Higgins@bluebirdnetwork.com

WINDSTREAM KDL, INC.
ATTN: DONALD (SCOTT) BUILTA
(309) 212-3870
Donald.Builta@windstream.com

STRATUS NETWORK
ATTN: ANDREW FRANCZEK
afranczek@stratusnet.com

LEGEND

CONTROL POINT	EXISTING AERIAL
EXISTING POWER POLE	EXISTING WATER
EXISTING GUY	EXISTING ELECTRIC
EXISTING SIGN	EXISTING FIBER OPTIC
EXISTING TREE	EXISTING GAS
EXISTING INLET	EXISTING TELEPHONE
EXISTING MANHOLE	EXISTING PIPE CULVERT
EXISTING MAILBOX	EXISTING STORM SEWER
EXISTING LIGHT POLE	EXISTING SANITARY SEWER
EXISTING FIRE HYDRANT	EXISTING R.O.W.
EXISTING MAST ARM	EXISTING PAVED DITCH
EXISTING ROW MARKER	EXISTING GUARDRAIL
PROPOSED INLET	PROPOSED STORM SEWER
PROPOSED MANHOLE	PROPOSED WATER MAIN
PROPOSED SIGN	PROPOSED R.O.W.
	TEMPORARY EASEMENT

UTILITY NOTE

THE LOCATIONS OF BURIED AND ABOVE GROUND UTILITIES SHOWN ARE APPROXIMATE, ARE SHOWN FOR CONTRACTOR INFORMATIONAL USE ONLY, AND ARE NOT TO BE REFERENCED FOR CONSTRUCTION PURPOSES. THE IMPLIED PRESENCE OR ABSENCE OF UTILITIES IS NOT TO BE CONSTRUED BY THE OWNER, ENGINEER, CONTRACTOR, OR SUBCONTRACTORS TO BE AN ACCURATE AND COMPLETE REPRESENTATION OF UTILITIES THAT MAY OR MAY NOT EXIST ON THE CONSTRUCTION SITE. BURIED AND ABOVEGROUND UTILITY LOCATION, IDENTIFICATION, AND MARKING ARE THE SOLE RESPONSIBILITY OF THE CONTRACTOR. REROUTING, DISCONNECTION, PROTECTION, ETC. OF ANY UTILITIES MUST BE COORDINATED AMONG THE CONTRACTOR, UTILITY COMPANY, AND OWNER. SITE SAFETY, INCLUDING THE AVOIDANCE OF HAZARDS, ASSOCIATED WITH BURIED AND ABOVEGROUND UTILITIES REMAIN THE SOLE RESPONSIBILITY OF THE CONTRACTOR.

© Copyright Hanson Professional Services Inc. 2025

HANSON
Hanson Professional Services Inc.

DESIGNED JFC 7/26/2023 12:00:00 AM
DRAWN RLA 7/26/2023 12:00:00 AM
REVIEWED MGD 10/25/2024 12:00:00 AM

MODEL: General Notes
FILE NAME: I:\13Jobs\13L0177A\CAD\RoadSheet\Plan Set 3 (8th-10th)\sht-gennotes02.dgn

Final

USER NAME = ander00846	DESIGNED - SD/JC	REVISED -	
	DRAWN - RA/CL	REVISED -	
PLOT SCALE = 0.167 ' / in.	CHECKED - MGD	REVISED -	
PLOT DATE = 3/26/2025	DATE - 10/25/2024 12:00:00 AM	REVISED -	

STATE OF ILLINOIS
DEPARTMENT OF TRANSPORTATION

COURT STREET
GENERAL NOTES AND LEGEND

SCALE: N/A | SHEET OF SHEETS | STA. TO STA.

F.A.P. RTE.	SECTION	COUNTY	TOTAL SHEETS	SHEET NO.
693	20-00196-01-RS	TAZEWELL	136	3
	13L0177A	CONTRACT NO. 89859		
	ILLINOIS	FED. AID PROJECT		

CODE NO.	ITEM	UNIT	TOTAL QUANTITY	CODE 0005 ROADWAY QUANTITY	CODE 0021 SIGNAL QUANTITY	CODE 0021 LIGHTING QUANTITY	CODE 0043 WATER QUANTITY (100% ILAW)
20100210	TREE REMOVAL (OVER 15 UNITS DIAMETER)	UNIT	48	48			
20200100	EARTH EXCAVATION	CU YD	1,165	1,165			
20201200	REMOVAL AND DISPOSAL OF UNSUITABLE MATERIAL	CU YD	634	634			
21000300	GRANULAR EMBANKMENT, SPECIAL	TON	1,300	1,300			
21001000	GEOTECHNICAL FABRIC FOR GROUND STABILIZATION	SQ YD	1,902	1,902			
21101615	TOPSOIL FURNISH AND PLACE, 4"	SQ YD	800	800			
25000110	SEEDING, CLASS 1A	ACRE	0.25	0.25			
25000400	NITROGEN FERTILIZER NUTRIENT	POUND	24	24			
25000500	PHOSPHORUS FERTILIZER NUTRIENT	POUND	24	24			
25000600	POTASSIUM FERTILIZER NUTRIENT	POUND	24	24			
25100105	MULCH, METHOD 1	ACRE	0.25	0.25			
28000250	TEMPORARY EROSION CONTROL SEEDING	POUND	50	50			
28000400	PERIMETER EROSION BARRIER	FOOT	664	664			
28000510	INLET FILTERS	EACH	29	29			
31101200	SUBBASE GRANULAR MATERIAL, TYPE B 4"	SQ YD	2,388	2,388			

* SPECIALTY ITEMS

© Copyright Hanson Professional Services Inc. 2025
HANSON
Hanson Professional Services Inc.

DESIGNED JFC 7/26/2023 12:00:00 AM
DRAWN RLA 7/26/2023 12:00:00 AM
REVIEWED MGD 10/25/2024 12:00:00 AM

MODEL: SOQ1
FILE NAME: 113)dot\13L0177A\CAD\Road\Sheet\Plan-Set 3 (Rb-10th)sht-SOQ01.dgn

Final

USER NAME = ander00846	DESIGNED - SD/JC	REVISED -	
	DRAWN - RA/CL	REVISED -	
PLOT SCALE = 0.167 ' / in.	CHECKED - MGD	REVISED -	
PLOT DATE = 3/26/2025	DATE - 10/25/2024 12:00:00 AM	REVISED -	

STATE OF ILLINOIS
DEPARTMENT OF TRANSPORTATION

COURT STREET
SUMMARY OF QUANTITIES

SCALE: N/A | SHEET OF SHEETS | STA. TO STA.

F.A.P. RTE.	SECTION	COUNTY	TOTAL SHEETS	SHEET NO.
693	20-00196-01-RS	TAZEWELL	136	4
	13L0177A	CONTRACT NO. 89859		
	ILLINOIS	FED. AID PROJECT		

CODE NO.	ITEM	UNIT	TOTAL QUANTITY	CODE 0005 ROADWAY QUANTITY	CODE 0021 SIGNAL QUANTITY	CODE 0021 LIGHTING QUANTITY	CODE 0043 WATER QUANTITY (100% ILAW)
31101400	SUBBASE GRANULAR MATERIAL, TYPE B 6"	SQ YD	101	101			
35101100	AGGREGATE BASE COURSE, TYPE A 12"	SQ YD	9,411	9,411			
35400300	PORTLAND CEMENT CONCRETE BASE COURSE WIDENING 8"	SQ YD	56	56			
40201000	AGGREGATE FOR TEMPORARY ACCESS	TON	250	250			
40600295	POLYMERIZED BITUMINOUS MATERIALS (TACK COAT)	POUND	870	870			
40600982	HOT-MIX ASPHALT SURFACE REMOVAL - BUTT JOINT	SQ YD	668	668			
40604160	POLYMERIZED HOT-MIX ASPHALT SURFACE COURSE, IL-9.5, MIX "D", N50	TON	167	167			
40800050	INCIDENTAL HOT-MIX ASPHALT SURFACING	TON	68	68			
42000306	PORTLAND CEMENT CONCRETE PAVEMENT 8 1/4" (JOINTED)	SQ YD	8,762	8,762			
42001300	PROTECTIVE COAT	SQ YD	11,706	11,706			
42300200	PORTLAND CEMENT CONCRETE DRIVEWAY PAVEMENT, 6 INCH	SQ YD	95	95			
42300400	PORTLAND CEMENT CONCRETE DRIVEWAY PAVEMENT, 8 INCH	SQ YD	463	463			
42400100	PORTLAND CEMENT CONCRETE SIDEWALK 4 INCH	SQ FT	15,154	15,154			
42400800	DETECTABLE WARNINGS	SQ FT	283	283			

* SPECIALTY ITEMS

© Copyright Hanson Professional Services Inc. 2025
HANSON Hanson Professional Services Inc.

DESIGNED JFC 7/26/2023 12:00:00 AM
DRAWN RLA 7/26/2023 12:00:00 AM
REVIEWED MGD 10/25/2024 12:00:00 AM

MODEL: SOD-2
FILE NAME: U:\jobs\13L0177A\CAD\Roadway\Sheet\Plan-Set 3 (8in-10in)\sht-SOD01.dgn

Final

USER NAME = ander00846	DESIGNED - SDJJC	REVISED -	
	DRAWN - RA/CL	REVISED -	
PLOT SCALE = 0.167 ' / in.	CHECKED - MGD	REVISED -	
PLOT DATE = 3/26/2025	DATE - 10/25/2024 12:00:00 AM	REVISED -	

STATE OF ILLINOIS
DEPARTMENT OF TRANSPORTATION

COURT STREET
SUMMARY OF QUANTITIES

SCALE: N/A | SHEET OF SHEETS | STA. TO STA.

F.A.P. RTE.	SECTION	COUNTY	TOTAL SHEETS	SHEET NO.
693	20-00196-01-RS	TAZEWELL	136	5
	13L0177A	CONTRACT NO. 89859		
	ILLINOIS	FED. AID PROJECT		

CODE NO.	ITEM	UNIT	TOTAL QUANTITY	CODE 0005 ROADWAY QUANTITY	CODE 0021 SIGNAL QUANTITY	CODE 0021 LIGHTING QUANTITY	CODE 0043 WATER QUANTITY (100% ILAW)
44000100	PAVEMENT REMOVAL	SQ YD	9,005	9,005			
44000157	HOT-MIX ASPHALT SURFACE REMOVAL, 2"	SQ YD	485	485			
44000200	DRIVEWAY PAVEMENT REMOVAL	SQ YD	406	406			
44000500	COMBINATION CURB AND GUTTER REMOVAL	FOOT	3,064	3,064			
44000600	SIDEWALK REMOVAL	SQ FT	14,623	14,623			
44003100	MEDIAN REMOVAL	SQ FT	517	517			
44201357	CLASS C PATCHES, TYPE III, 10 INCH	SQ YD	36	36			
* 50901760	PIPE HANDRAIL	FOOT	95	95			
52200900	CONCRETE STRUCTURES (RETAINING WALL)	CU YD	50	50			
550A0050	STORM SEWERS, CLASS A, TYPE 1 12"	FOOT	887	887			
55100500	STORM SEWER REMOVAL 12"	FOOT	501	501			
* 56100050	DUCTILE IRON WATER MAIN TEE, 12" X 6"	EACH	1				1
* 56100055	DUCTILE IRON WATER MAIN TEE, 12" X 8"	EACH	1				1
* 56100600	WATER MAIN 6"	FOOT	72				72

* SPECIALTY ITEMS

© Copyright Hanson Professional Services Inc. 2025
HANSON Hanson Professional Services Inc.

DESIGNED JFC 7/26/2023 12:00:00 AM
DRAWN RLA 7/26/2023 12:00:00 AM
REVIEWED MGD 10/25/2024 12:00:00 AM

MODEL: SQQ-3
FILE NAME: I:\13\bd\13L0177A\CAD\BeadSheet\Plan-Set 3 (8th-10th)\sht-SQQ01.dgn

Final

USER NAME = ander00846	DESIGNED - SD/JC	REVISED -	
	DRAWN - RA/CL	REVISED -	
PLOT SCALE = 0.167 ' / in.	CHECKED - MGD	REVISED -	
PLOT DATE = 3/26/2025	DATE - 10/25/2024 12:00:00 AM	REVISED -	

STATE OF ILLINOIS
DEPARTMENT OF TRANSPORTATION

COURT STREET
SUMMARY OF QUANTITIES

SCALE: N/A SHEET OF SHEETS STA. TO STA.

F.A.P. RTE.	SECTION	COUNTY	TOTAL SHEETS	SHEET NO.
693	20-00196-01-RS	TAZEWELL	136	6
	13L0177A	CONTRACT NO. 89859		
	ILLINOIS	FED. AID PROJECT		

	CODE NO.	ITEM	UNIT	TOTAL QUANTITY	CODE 0005 ROADWAY QUANTITY	CODE 0021 SIGNAL QUANTITY	CODE 0021 LIGHTING QUANTITY	CODE 0043 WATER QUANTITY (100% ILAW)
*	56100700	WATER MAIN 8"	FOOT	21				21
*	56100900	WATER MAIN 12"	FOOT	1,119				1,119
*	56101162	DUCTILE IRON WATER MAIN REDUCER, 12" X 10"	EACH	2				2
*	56105200	WATER VALVES 12"	EACH	1				1
*	56108800	TAPPING VALVES AND SLEEVES 6"	EACH	1				1
*	56108900	TAPPING VALVES AND SLEEVES 8"	EACH	1				1
*	56109000	TAPPING VALVES AND SLEEVES 10"	EACH	2				2
*	56109398	DUCTILE IRON WATER MAIN FITTINGS 6" 11.25 DEGREE BEND	EACH	1				1
*	56109418	DUCTILE IRON WATER MAIN FITTINGS 6" 45.00 DEGREE BEND	EACH	1				1
*	56109420	DUCTILE IRON WATER MAIN FITTINGS 8" 45.00 DEGREE BEND	EACH	4				4
*	56109424	DUCTILE IRON WATER MAIN FITTINGS 12" 45.00 DEGREE BEND	EACH	18				18
*	56109438	DUCTILE IRON WATER MAIN FITTINGS 12" 90.00 DEGREE BEND	EACH	1				1
*	56200300	WATER SERVICE LINE 1"	FOOT	345				345
*	56201160	WATER SERVICE LINE 6"	FOOT	61				61

* SPECIALTY ITEMS

© Copyright Hanson Professional Services Inc., 2025
HANSON Hanson Professional Services Inc.

DESIGNED JFC 7/26/2023 12:00:00 AM
DRAWN RLA 7/26/2023 12:00:00 AM
REVIEWED MGD 10/25/2024 12:00:00 AM

MODEL: 500-4
FILE NAME: I:\137\Jobs\13L0177A\CAD\RoadSheet\Plan-Set 3 (8in-10in)ph-50001.dgn

Final

USER NAME = ander00846	DESIGNED - SD/JC	REVISED -	
	DRAWN - RA/CL	REVISED -	
PLOT SCALE = 0.167 ' / in.	CHECKED - MGD	REVISED -	
PLOT DATE = 3/26/2025	DATE - 10/25/2024 12:00:00 AM	REVISED -	

STATE OF ILLINOIS
DEPARTMENT OF TRANSPORTATION

COURT STREET
SUMMARY OF QUANTITIES

SCALE: N/A | SHEET OF SHEETS | STA. TO STA.

F.A.P. RTE.	SECTION	COUNTY	TOTAL SHEETS	SHEET NO.
693	20-00196-01-RS	TAZEWELL	136	7
	13L0177A	CONTRACT NO. 89859		
	ILLINOIS	FED. AID PROJECT		

	CODE NO.	ITEM	UNIT	TOTAL QUANTITY	CODE 0005 ROADWAY QUANTITY	CODE 0021 SIGNAL QUANTITY	CODE 0021 LIGHTING QUANTITY	CODE 0043 WATER QUANTITY (100% ILAW)
*	56400500	FIRE HYDRANTS TO BE REMOVED	EACH	3				3
*	56500800	DOMESTIC WATER SERVICE BOXES	EACH	10				10
	59300100	CONTROLLED LOW-STRENGTH MATERIAL	CU YD	845	570			275
	60218400	MANHOLES, TYPE A, 4'-DIAMETER, TYPE 1 FRAME, CLOSED LID	EACH	2	2			
	60221100	MANHOLES, TYPE A, 5'-DIAMETER, TYPE 1 FRAME, CLOSED LID	EACH	3	3			
	60223800	MANHOLES, TYPE A, 6'-DIAMETER, TYPE 1 FRAME, CLOSED LID	EACH	1	1			
	60236200	INLETS, TYPE A, TYPE 8 GRATE	EACH	1	1			
	60240310	INLETS, TYPE B, TYPE 11 FRAME AND GRATE	EACH	2	2			
	60500060	REMOVING INLETS	EACH	13	13			
	60600605	CONCRETE CURB, TYPE B	FOOT	67	67			
	60603800	COMBINATION CONCRETE CURB AND GUTTER, TYPE B-6.12	FOOT	3,050	3,050			
	61140000	STORM SEWERS (SPECIAL), 8"	FOOT	13	13			
	67000500	ENGINEER'S FIELD OFFICE, TYPE B	CAL MO	10	10			
	67100100	MOBILIZATION	L SUM	1	1			

* SPECIALTY ITEMS

© Copyright Hanson Professional Services Inc. 2025
HANSON Hanson Professional Services Inc.

DESIGNED JFC 7/26/2023 12:00:00 AM
DRAWN RLA 7/26/2023 12:00:00 AM
REVIEWED MGD 10/25/2024 12:00:00 AM

MODEL: 500-5
FILE NAME: f:\13\bds\13L0177A\CAD\Beams\Sheet\Plan-Set 3 (8th-10th)\ch-50001.dgn

Final

USER NAME = ander00846	DESIGNED - SDJJC	REVISED -	
	DRAWN - RA/CL	REVISED -	
PLOT SCALE = 0.167 ' / in.	CHECKED - MGD	REVISED -	
PLOT DATE = 3/26/2025	DATE - 10/25/2024 12:00:00 AM	REVISED -	

STATE OF ILLINOIS
DEPARTMENT OF TRANSPORTATION

COURT STREET
SUMMARY OF QUANTITIES

SCALE: N/A | SHEET OF SHEETS | STA. TO STA.

F.A.P. RTE.	SECTION	COUNTY	TOTAL SHEETS	SHEET NO.
693	20-00196-01-RS	TAZEWELL	136	8
	13L0177A	CONTRACT NO. 89859		
	ILLINOIS	FED. AID PROJECT		

	CODE NO.	ITEM	UNIT	TOTAL QUANTITY	CODE 0005 ROADWAY QUANTITY	CODE 0021 SIGNAL QUANTITY	CODE 0021 LIGHTING QUANTITY	CODE 0043 WATER QUANTITY (100% ILAW)
	70107025	CHANGEABLE MESSAGE SIGN	CAL DA	120	120			
	70300150	SHORT TERM PAVEMENT MARKING REMOVAL	SQ FT	3,496	3,496			
	70307100	TEMPORARY PAVEMENT MARKING LETTERS AND SYMBOLS - TYPE IV TAPE	SQ FT	302	302			
	70307120	TEMPORARY PAVEMENT MARKING - LINE 4" - TYPE IV TAPE	FOOT	3,083	3,083			
	70307130	TEMPORARY PAVEMENT MARKING - LINE 6" - TYPE IV TAPE	FOOT	690	690			
	70307140	TEMPORARY PAVEMENT MARKING - LINE 8" - TYPE IV TAPE	FOOT	1,840	1,840			
	70307160	TEMPORARY PAVEMENT MARKING - LINE 12"- TYPE IV TAPE	FOOT	68	68			
	70307210	TEMPORARY PAVEMENT MARKING - LINE 24"- TYPE IV TAPE	FOOT	265	265			
*	72000100	SIGN PANEL - TYPE 1	SQ FT	52	21	31		
*	72000200	SIGN PANEL - TYPE 2	SQ FT	105		105		
*	72800100	TELESCOPING STEEL SIGN SUPPORT	FOOT	152	152			
*	78009000	MODIFIED URETHANE PAVEMENT MARKING - LETTERS AND SYMBOLS	SQ FT	302	302			
*	78009004	MODIFIED URETHANE PAVEMENT MARKING - LINE 4"	FOOT	3,083	3,083			
*	78009006	MODIFIED URETHANE PAVEMENT MARKING - LINE 6"	FOOT	690	690			

* SPECIALTY ITEMS

© Copyright Hanson Professional Services Inc. 2025

HANSON Hanson Professional Services Inc.

DESIGNED JFC 7/26/2023 12:00:00 AM
DRAWN RLA 7/26/2023 12:00:00 AM
REVIEWED MGD 10/28/2024 12:00:00 AM

MODEL: SQ-6
FILE NAME: I:\13Jobs\13L0177A\CAD\BeastSheet\Plan Set 3 (8in-18in)\sh-SQQ01.dgn

Final

USER NAME = ander00846	DESIGNED - SD/JC	REVISED -	
	DRAWN - RA/CL	REVISED -	
PLOT SCALE = 0.167 ' / in.	CHECKED - MGD	REVISED -	
PLOT DATE = 3/26/2025	DATE - 10/25/2024 12:00:00 AM	REVISED -	

STATE OF ILLINOIS
DEPARTMENT OF TRANSPORTATION

COURT STREET
SUMMARY OF QUANTITIES

SCALE: N/A | SHEET OF SHEETS | STA. TO STA.

F.A.P. RTE.	SECTION	COUNTY	TOTAL SHEETS	SHEET NO.
693	20-00196-01-RS	TAZEWELL	136	9
	13L0177A	CONTRACT NO. 89859		
	ILLINOIS	FED. AID PROJECT		

	CODE NO.	ITEM	UNIT	TOTAL QUANTITY	CODE 0005 ROADWAY QUANTITY	CODE 0021 SIGNAL QUANTITY	CODE 0021 LIGHTING QUANTITY	CODE 0043 WATER QUANTITY (100% ILAW)
*	78009008	MODIFIED URETHANE PAVEMENT MARKING - LINE 8"	FOOT	1,840	1,840			
*	78009012	MODIFIED URETHANE PAVEMENT MARKING - LINE 12"	FOOT	68	68			
*	78009024	MODIFIED URETHANE PAVEMENT MARKING - LINE 24"	FOOT	265	265			
*	80400100	ELECTRIC SERVICE INSTALLATION	EACH	1			1	
*	80500100	SERVICE INSTALLATION, TYPE A	EACH	2		2		
*	81028350	UNDERGROUND CONDUIT, PVC, 2" DIA.	FOOT	158		158		
*	81028370	UNDERGROUND CONDUIT, PVC, 3" DIA.	FOOT	92		92		
*	81028390	UNDERGROUND CONDUIT, PVC, 4" DIA.	FOOT	592		592		
*	81028720	UNDERGROUND CONDUIT, COILABLE NONMETALLIC CONDUIT, 1" DIA.	FOOT	1,000			1,000	
*	81400100	HANDHOLE	EACH	6		6		
*	81400300	DOUBLE HANDHOLE	EACH	2		2		
*	81400700	HANDHOLE, PORTLAND CEMENT CONCRETE	EACH	2			2	
*	81702110	ELECTRIC CABLE IN CONDUIT, 600V (XLP-TYPE USE) 1/C NO. 10	FOOT	10,673		1,323	9,350	
*	81702415	ELECTRIC CABLE IN CONDUIT, 600V (XLP-TYPE USE) 3-1/C NO. 6	FOOT	33		33		

* SPECIALTY ITEMS

©Copyright Hanson Professional Services Inc. 2025
HANSON Hanson Professional Services Inc.

DESIGNED JFC 7/26/2023 12:00:00 AM
DRAWN RLA 7/26/2023 12:00:00 AM
REVIEWED MGD 10/25/2024 12:00:00 AM

MODEL: 500-7
FILE NAME: I:\Jobs\13L0177A\CAD\BuildSheet\Plan-Set 3 (8th-10th)\ch-SD001.dgn

Final

USER NAME = ander00846	DESIGNED - SD/JC	REVISED -	
	DRAWN - RA/CL	REVISED -	
PLOT SCALE = 0.167 ' / in.	CHECKED - MGD	REVISED -	
PLOT DATE = 3/26/2025	DATE - 10/25/2024 12:00:00 AM	REVISED -	

STATE OF ILLINOIS
DEPARTMENT OF TRANSPORTATION

COURT STREET
SUMMARY OF QUANTITIES

SCALE: N/A | SHEET OF SHEETS | STA. TO STA.

F.A.P. RTE.	SECTION	COUNTY	TOTAL SHEETS	SHEET NO.
693	20-00196-01-RS	TAZEWELL	136	10
	13L0177A	CONTRACT NO. 89859		
	ILLINOIS	FED. AID PROJECT		

* SPECIALTY ITEMS

	CODE NO.	ITEM	UNIT	TOTAL QUANTITY	CODE 0005 ROADWAY QUANTITY	CODE 0021 SIGNAL QUANTITY	CODE 0021 LIGHTING QUANTITY	CODE 0043 WATER QUANTITY (100% ILAW)
*	82110005	LUMINAIRE, LED, ROADWAY, OUTPUT DESIGNATION E	EACH	5			5	
*	82110007	LUMINAIRE, LED, ROADWAY, OUTPUT DESIGNATION G	EACH	15		7	8	
*	83006200	LIGHT POLE, ALUMINUM, 30 FT. M.H., 6 FT. MAST ARM	EACH	5			5	
*	83600200	LIGHT POLE FOUNDATION, 24" DIAMETER	FOOT	25			25	
*	83800105	BREAKAWAY DEVICE, TRANSFORMER BASE, 11.5 INCH BOLT CIRCLE	EACH	20			20	
*	85700200	FULL-ACTUATED CONTROLLER AND TYPE IV CABINET	EACH	2		2		
*	87301225	ELECTRIC CABLE IN CONDUIT, SIGNAL NO. 14 3C	FOOT	1,267		1,267		
*	87301245	ELECTRIC CABLE IN CONDUIT, SIGNAL NO. 14 5C	FOOT	3,317		3,317		
*	87301255	ELECTRIC CABLE IN CONDUIT, SIGNAL NO. 14 7C	FOOT	3,694		3,694		
*	87301295	ELECTRIC CABLE IN CONDUIT, SIGNAL NO. 20 3C	FOOT	1,267		1,267		
*	87301900	ELECTRIC CABLE IN CONDUIT, EQUIPMENT GROUNDING CONDUCTOR, NO. 6 1C	FOOT	1,110		1,110		
*	87502440	TRAFFIC SIGNAL POST, GALVANIZED STEEL 10 FT.	EACH	1		1		
*	87502490	TRAFFIC SIGNAL POST, GALVANIZED STEEL 15 FT.	EACH	8		8		
*	87702900	STEEL COMBINATION MAST ARM ASSEMBLY AND POLE 34 FT.	EACH	4		4		
*	87702930	STEEL COMBINATION MAST ARM ASSEMBLY AND POLE 40 FT.	EACH	2		2		

© Copyright Hanson Professional Services Inc. 2023
HANSON Hanson Professional Services Inc.

DESIGNED JFC 7/26/2023 12:00:00 AM
DRAWN RLA 7/26/2023 12:00:00 AM
REVIEWED MGD 10/25/2024 12:00:00 AM

MODEL: SOQ.B
FILE NAME: I:\13jobs\13L0177A\CSD\Road\Sheet\Plan Set 3 (6th-10th)\ht-SQ001.dgn

Final

USER NAME = ander03846	DESIGNED - SD/JC	REVISED -	
	DRAWN - RA/CL	REVISED -	
PLOT SCALE = 0.167 ' / in.	CHECKED - MGD	REVISED -	
PLOT DATE = 3/26/2025	DATE - 10/25/2024 12:00:00 AM	REVISED -	

STATE OF ILLINOIS
DEPARTMENT OF TRANSPORTATION

COURT STREET
SUMMARY OF QUANTITIES

SCALE: N/A | SHEET OF SHEETS | STA. TO STA.

F.A.P. RTE.	SECTION	COUNTY	TOTAL SHEETS	SHEET NO.
693	20-00196-01-RS	TAZEWELL	136	11
	13L0177A	CONTRACT NO. 89859		
	ILLINOIS	FED. AID PROJECT		

	CODE NO.	ITEM	UNIT	TOTAL QUANTITY	CODE 0005 ROADWAY QUANTITY	CODE 0021 SIGNAL QUANTITY	CODE 0021 LIGHTING QUANTITY	CODE 0043 WATER QUANTITY (100% ILAW)
*	87702985	STEEL COMBINATION MAST ARM ASSEMBLY AND POLE 52 FT.	EACH	1		1		
*	87800100	CONCRETE FOUNDATION, TYPE A	FOOT	27		27		
*	87800150	CONCRETE FOUNDATION, TYPE C	FOOT	8		8		
*	87800415	CONCRETE FOUNDATION, TYPE E 36-INCH DIAMETER	FOOT	85		85		
*	88040070	SIGNAL HEAD, POLYCARBONATE, LED, 1-FACE, 3-SECTION, BRACKET MOUNTED	EACH	10		10		
*	88040090	SIGNAL HEAD, POLYCARBONATE, LED, 1-FACE, 3-SECTION, MAST ARM MOUNTED	EACH	15		15		
*	88040110	SIGNAL HEAD, POLYCARBONATE, LED, 1-FACE, 4-SECTION, BRACKET MOUNTED	EACH	4		4		
*	88040120	SIGNAL HEAD, POLYCARBONATE, LED, 1-FACE, 4-SECTION, MAST ARM MOUNTED	EACH	4		4		
*	88102717	PEDESTRIAN SIGNAL HEAD, LED, 1-FACE, BRACKET MOUNTED WITH COUNTDOWN TIMER	EACH	14		14		
*	88200510	TRAFFIC SIGNAL BACKPLATE, RETROREFLECTIVE	EACH	33		33		
*	88700200	LIGHT DETECTOR	EACH	7		7		
*	89000100	TEMPORARY TRAFFIC SIGNAL INSTALLATION	EACH	2		2		
*	89502375	REMOVE EXISTING TRAFFIC SIGNAL EQUIPMENT	EACH	2		2		
*	X0320023	CLOSED CIRCUIT TELEVISION DOME CAMERA, HD	EACH	1		1		

* SPECIALTY ITEMS

© Copyright Hanson Professional Services Inc. 2021
HANSON Hanson Professional Services Inc.

DESIGNED JFC 7/26/2023 12:00:00 AM
DRAWN RLA 7/26/2023 12:00:00 AM
REVIEWED MGD 10/25/2024 12:00:00 AM

MODEL: SIG-9
FILE NAME: I:\13Job\13L0177A\CAD\Road\Sheet\Plan-Set 3 (8in-10in)\sh-SG001.dgn

Final

USER NAME = ander00846	DESIGNED - SD/JC	REVISED -	
	DRAWN - RA/CL	REVISED -	
PLOT SCALE = 0.167 ' / in.	CHECKED - MGD	REVISED -	
PLOT DATE = 3/26/2025	DATE - 10/25/2024 12:00:00 AM	REVISED -	

STATE OF ILLINOIS
DEPARTMENT OF TRANSPORTATION

COURT STREET
SUMMARY OF QUANTITIES

SCALE: N/A | SHEET OF SHEETS | STA. TO STA.

F.A.P. RTE.	SECTION	COUNTY	TOTAL SHEETS	SHEET NO.
693	20-00196-01-RS	TAZEWELL	136	12
	13L0177A	CONTRACT NO. 89859		

ILLINOIS | FED. AID PROJECT

	CODE NO.	ITEM	UNIT	TOTAL QUANTITY	CODE 0005 ROADWAY QUANTITY	CODE 0021 SIGNAL QUANTITY	CODE 0021 LIGHTING QUANTITY	CODE 0043 WATER QUANTITY (100% ILAW)
*	X0325810	WIRELESS ETHERNET RADIO	EACH	2		2		
*	X0326812	CAT 5 ETHERNET CABLE	FOOT	163		163		
*	X1400127	CAT. 6 ETHERNET CABLE	FOOT	370		370		
	X2130010	EXPLORATION TRENCH (SPECIAL)	FOOT	24				24
	X4240118	PORTLAND CEMENT CONCRETE SIDEWALK CURB	FOOT	55	55			
	X4240130	COMBINATION CONCRETE CURB AND SIDEWALK 4 INCH (SPECIAL)	SQ FT	295	295			
	X5011100	FOUNDATION REMOVAL	EACH	2	2			
	X5012506	CONCRETE WALL REMOVAL	FOOT	418	418			
*	X5620112	WATER SERVICE CONNECTION	EACH	11				11
*	X5640150	FIRE HYDRANT ASSEMBLY COMPLETE	EACH	3				3
	X6020082	INLETS, TYPE G-1	EACH	1	1			
	X6021065	INLETS, TYPE G-1 (SPECIAL)	EACH	23	23			
	X6021827	INLET-MANHOLE, TYPE G-1, 7' DIAMETER (SPECIAL)	EACH	1	1			
	X6023508	INLETS, TYPE A, WITH SPECIAL FRAME AND GRATE	EACH	1	1			

* SPECIALTY ITEMS

© Copyright Hanson Professional Services Inc. 2025

HANSON
Hanson Professional Services Inc.

DESIGNED JFC 7/26/2023 12:00:00 AM
DRAWN RLA 7/26/2023 12:00:00 AM
REVIEWED MGD 10/25/2024 12:00:00 AM

MODEL: SOD-10
FILE NAME: E:\Jobs\13L0177A\CAD\Roadway\Sheet\Plan-Set 3 (8th-18th)\sh-SOD01.dgn

Final

USER NAME = ander00846	DESIGNED - SD/JC	REVISED -	
	DRAWN - RA/CL	REVISED -	
PLOT SCALE = 0.167 ' / in.	CHECKED - MGD	REVISED -	
PLOT DATE = 3/26/2025	DATE - 10/25/2024 12:00:00 AM	REVISED -	

STATE OF ILLINOIS
DEPARTMENT OF TRANSPORTATION

COURT STREET
SUMMARY OF QUANTITIES

SCALE: N/A | SHEET OF SHEETS | STA. TO STA.

F.A.P. RTE.	SECTION	COUNTY	TOTAL SHEETS	SHEET NO.
693	20-00196-01-RS	TAZEWELL	136	13
	13L0177A	CONTRACT NO. 89859		
	ILLINOIS	FED. AID PROJECT		

	CODE NO.	ITEM	UNIT	TOTAL QUANTITY	CODE 0005 ROADWAY QUANTITY	CODE 0021 SIGNAL QUANTITY	CODE 0021 LIGHTING QUANTITY	CODE 0043 WATER QUANTITY (100% ILAW)
	X6026050	SANITARY MANHOLES TO BE ADJUSTED	EACH	6	6			
	X6050205	FILLING EXISTING STORM SEWERS	CU YD	4	4			
	X6640104	FENCE REMOVAL	FOOT	73	73			
	X7010216	TRAFFIC CONTROL AND PROTECTION, (SPECIAL)	L SUM	1	1			
*	X8250505	LIGHTING CONTROLLER (SPECIAL)	EACH	1			1	
*	X8710050	FIBER OPTIC ETHERNET DROP AND REPEAT SWITCH	EACH	2		2		
*	X8760200	ACCESSIBLE PEDESTRIAN SIGNALS	EACH	14		14		
*	X8870300	EMERGENCY VEHICLE PRIORITY SYSTEM	EACH	2		2		
*	X8891202	WIDE AREA VIDEO VEHICLE DETECTION SYSTEM COMPLETE	EACH	2		2		
	XX000300	CONCRETE STEPS	SQ FT	22	22			
*	XX000739	CURB STOP & BOX 1 INCH	EACH	10				10
*	XX001249	ORNAMENTAL FENCE	FOOT	79	79			
*	XX006751	STAIR RAILING	FOOT	13	13			
*	XX008662	REMOVE EXISTING LIGHT POLE	EACH	3	3			

* SPECIALTY ITEMS

© Copyright Hanson Professional Services Inc. 2025
HANSON
Hanson Professional Services Inc.

DESIGNED JFC 7/26/2023 12:00:00 AM
DRAWN RLA 7/26/2023 12:00:00 AM
REVIEWED MGD 10/25/2024 12:00:00 AM

MODEL: SOQ-11
FILE NAME: I:\13\06\13L0177A\CAD\Road\Sheet\Plan-Set 3 (6th-20th)\sht-SOQ01.dgn

Final

USER NAME = ander00846	DESIGNED - SD/JC	REVISED -	
	DRAWN - RA/CL	REVISED -	
PLOT SCALE = 0.167 ' / in.	CHECKED - MGD	REVISED -	
PLOT DATE = 3/26/2025	DATE - 10/25/2024 12:00:00 AM	REVISED -	

STATE OF ILLINOIS
DEPARTMENT OF TRANSPORTATION

COURT STREET
SUMMARY OF QUANTITIES

SCALE: N/A | SHEET OF SHEETS | STA. TO STA.

F.A.P. RTE.	SECTION	COUNTY	TOTAL SHEETS	SHEET NO.
693	20-00196-01-RS	TAZEWELL	136	14
	13L0177A	CONTRACT NO. 89859		
	ILLINOIS	FED. AID PROJECT		

	CODE NO.	ITEM	UNIT	TOTAL QUANTITY	CODE 0005 ROADWAY QUANTITY	CODE 0021 SIGNAL QUANTITY	CODE 0021 LIGHTING QUANTITY	CODE 0043 WATER QUANTITY (100% ILAW)
	XX008729	REMOVE AND REINSTALL SIGN PANEL	EACH	19	19			
*	XX008839	WATER MAIN TO BE ABANDONED	L SUM	1				1
	Z0012455	CONCRETE STEP REMOVAL	EACH	2	2			
*	Z0013798	CONSTRUCTION LAYOUT	L SUM	1	1			
*	Z0033068	TRAFFIC SIGNAL BATTERY BACKUP SYSTEM	EACH	2		2		
	Z0056644	STORM SEWERS, TYPE 1, WATER MAIN QUALITY PIPE, 8"	FOOT	12	12			
	Z0056648	STORM SEWERS, TYPE 1, WATER MAIN QUALITY PIPE, 12"	FOOT	1,129	1,129			
	Z0056650	STORM SEWERS, TYPE 1, WATER MAIN QUALITY PIPE, 15"	FOOT	43	43			

* SPECIALTY ITEMS

© Copyright Hanson Professional Services Inc. 2025

HANSON
Hanson Professional Services Inc.

DESIGNED JFC 7/26/2023 12:00:00 AM
DRAWN RLA 7/26/2023 12:00:00 AM
REVISED MGD 10/25/2024 12:00:00 AM

MODEL: SOQ-12
FILE NAME: 113:\Jobs\13L0177A\CADRoad\Sheet\Plan-Set 3 (8in-10in)\sht-SOQ01.dgn

Final

USER NAME = ander00846	DESIGNED - SD/JC	REVISED -	
	DRAWN - RA/CL	REVISED -	
PLOT SCALE = 0.167 ' / in.	CHECKED - MGD	REVISED -	
PLOT DATE = 3/26/2025	DATE - 10/25/2024 12:00:00 AM	REVISED -	

STATE OF ILLINOIS
DEPARTMENT OF TRANSPORTATION

COURT STREET
SUMMARY OF QUANTITIES

SCALE: N/A | SHEET OF SHEETS | STA. TO STA.

F.A.P. RTE.	SECTION	COUNTY	TOTAL SHEETS	SHEET NO.
693	20-00196-01-RS	TAZEWELL	136	15
	13L0177A	CONTRACT NO. 89859		
	ILLINOIS	FED. AID PROJECT		

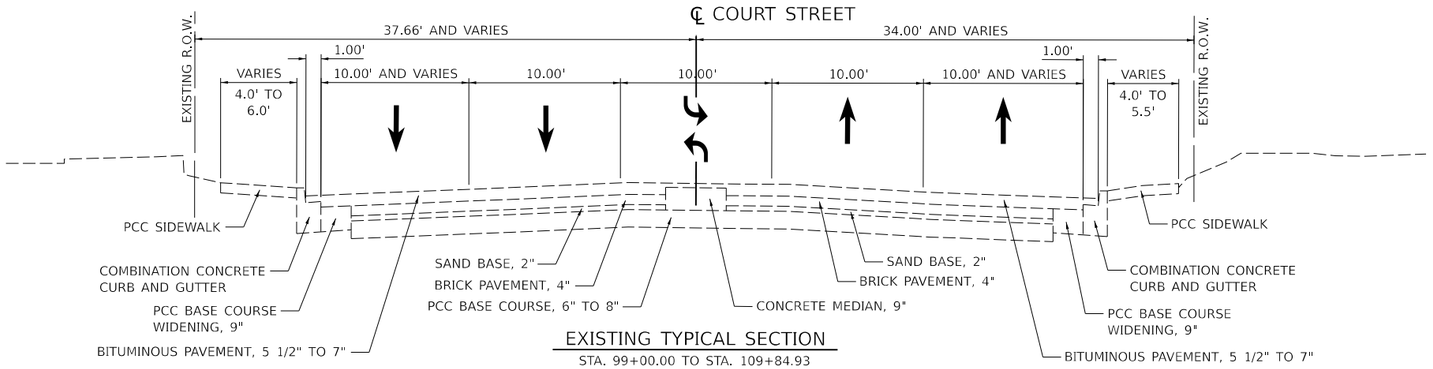

EXISTING TYPICAL SECTION

STA. 99+00.00 TO STA. 109+84.93

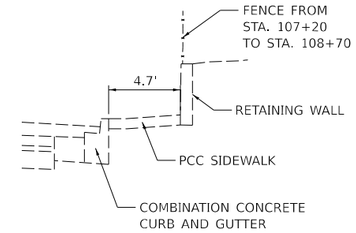

WALL SECTION

STA. 104+35.00 TO STA. 108+75.00

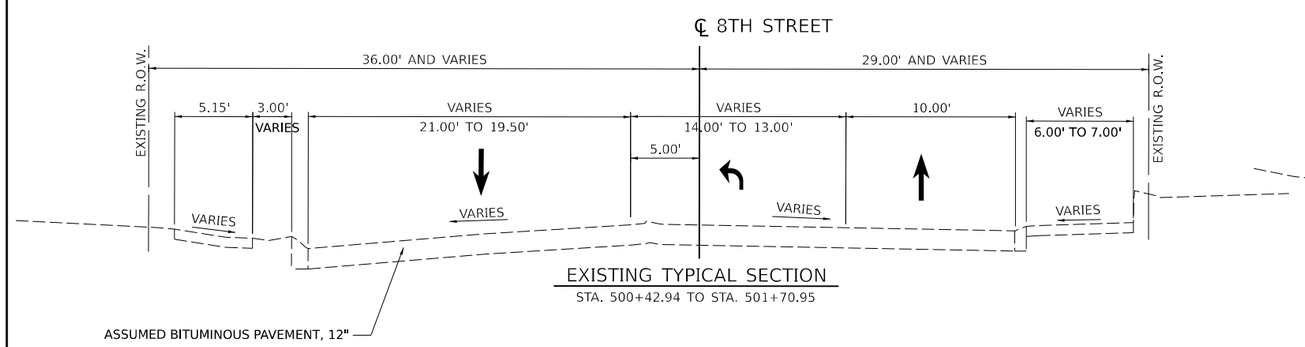

EXISTING TYPICAL SECTION

STA. 500+42.94 TO STA. 501+70.95

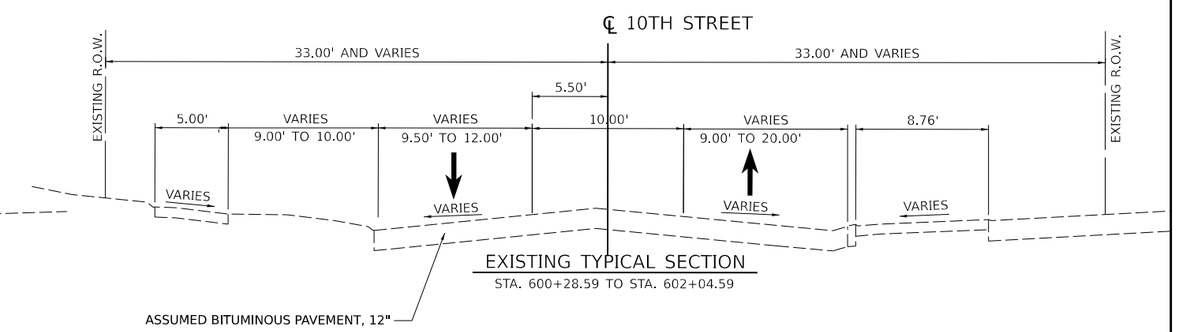

EXISTING TYPICAL SECTION

STA. 600+28.59 TO STA. 602+04.59

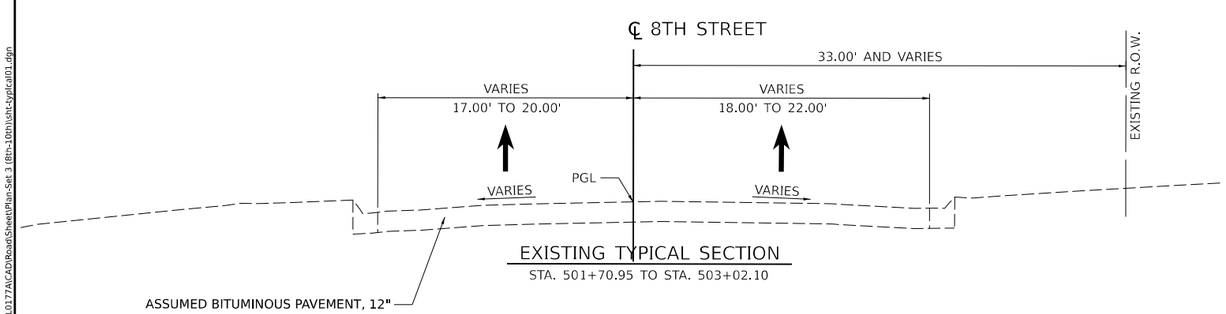

EXISTING TYPICAL SECTION

STA. 501+70.95 TO STA. 503+02.10

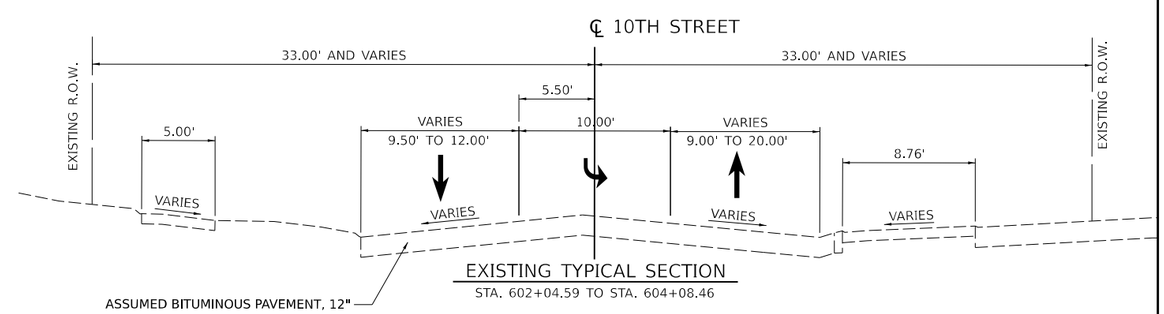

EXISTING TYPICAL SECTION

STA. 602+04.59 TO STA. 604+08.46

© Copyright Hanson Professional Services Inc. 2025

HANSON
Hanson Professional Services Inc.

DESIGNED	JFC	7/26/2023 12:00:00 AM
DRAWN	RLA	7/26/2023 12:00:00 AM
REVIEWED	MGD	10/25/2024 12:00:00 AM

MODEL: typical01
FILE NAME: K:\Jobs\13L0177A\CAD\Road\Sheet\Plan-Set 3 (8th-10th)\sht-typical01.dgn

Final

USER NAME = ander00846	DESIGNED - SD/JC	REVISED -	
	DRAWN - RA/CL	REVISED -	
PLOT SCALE = 0.16666667 ' / in.	CHECKED - MGD	REVISED -	
PLOT DATE = 3/26/2025	DATE - 10/25/2024 12:00:00 AM	REVISED -	

STATE OF ILLINOIS
DEPARTMENT OF TRANSPORTATION

COURT STREET
EXISTING TYPICAL SECTIONS

SCALE: N/A | SHEET OF SHEETS | STA. TO STA.

F.A.P. RTE.	SECTION	COUNTY	TOTAL SHEETS	SHEET NO.
693	20-00196-01-RS	TAZEWELL	136	16
	13L0177A	CONTRACT NO. 89859		
		ILLINOIS	FED. AID PROJECT	

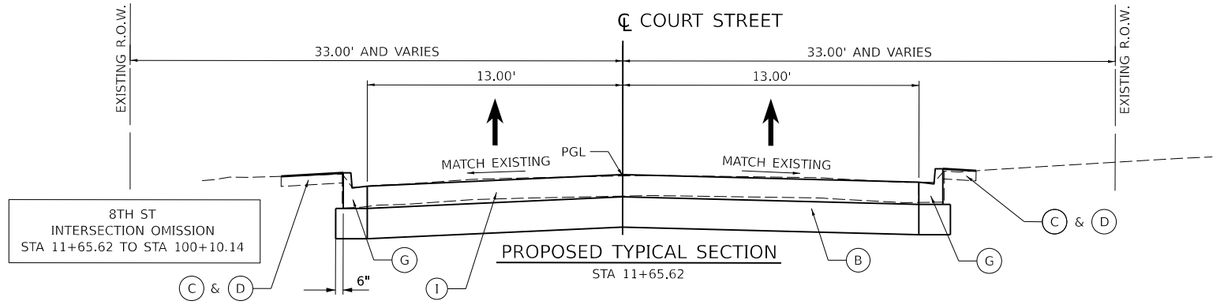

8TH ST
INTERSECTION OMISSION
STA 11+65.62 TO STA 100+10.14

PROPOSED TYPICAL SECTION
STA 11+65.62

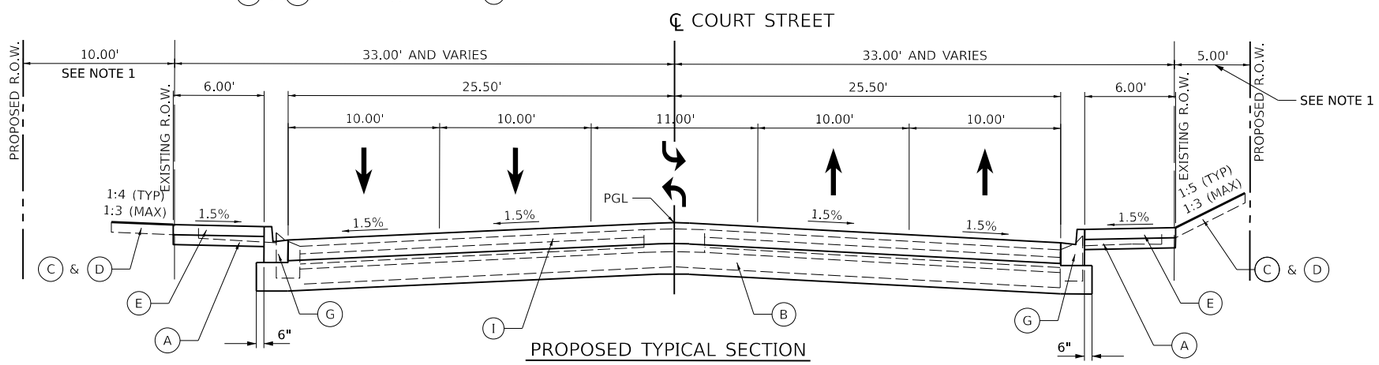

PROPOSED TYPICAL SECTION
STA. 100+10.64 TO STA. 106+00.00
STA. 108+23.78 TO STA. 109+85.00

9TH ST
INTERSECTION OMISSION
STA 102+85.67 TO STA 104+10.41

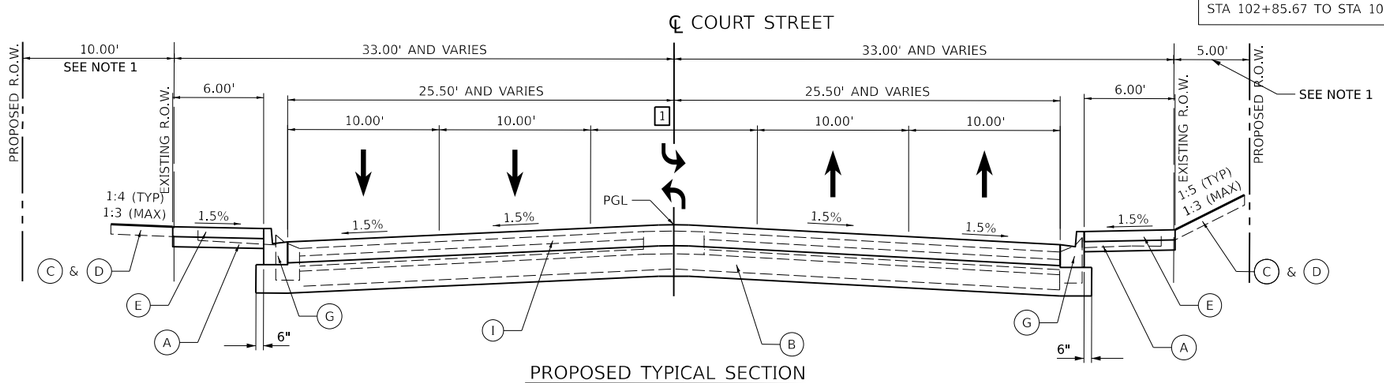

PROPOSED TYPICAL SECTION
STA. 106+00.00 TO STA. 108+23.78

10TH ST
INTERSECTION OMISSION
STA 107+88.98 TO STA 109+73.59

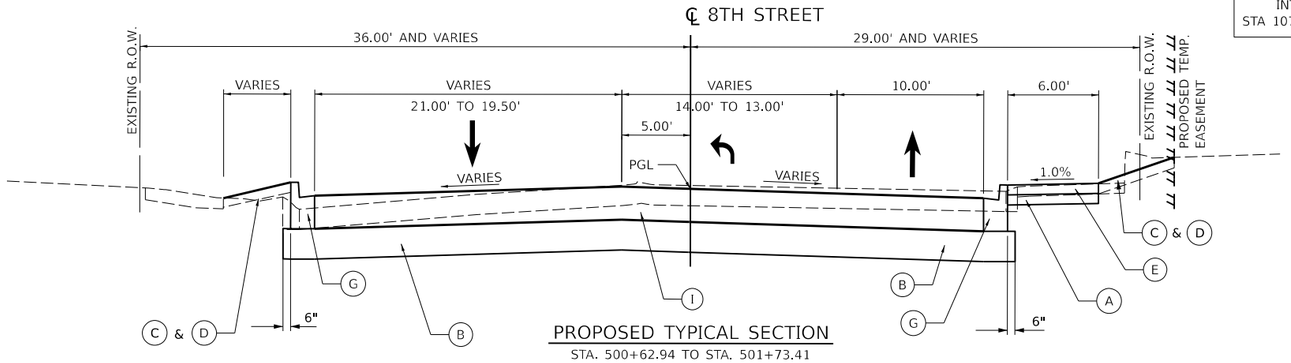

PROPOSED TYPICAL SECTION
STA. 500+62.94 TO STA. 501+73.41

PROPOSED LEGEND

- (A) SUBBASE GRANULAR MATERIAL, TYPE B, 4"
- (B) AGGREGATE BASE COURSE, TYPE A, 12"
- (C) TOPSOIL FURNISH AND PLACE, 4"
- (D) SEEDING CLASS 1A (W/ MULCH METHOD 1)
- (E) PORTLAND CEMENT CONCRETE SIDEWALK, 4 INCH
- (F) COMBINATION CONCRETE CURB-SIDEWALK 4", (SPECIAL)
- (G) COMBINATION CONCRETE CURB AND GUTTER, TYPE B-6.12
- (H) DEPRESSED COMBINATION CONCRETE CURB AND GUTTER, TYPE B-6.12
- (I) PCC PAVEMENT 8.25" (JOINTED)
- (J) PCC DRIVEWAY PAVEMENT, 6"
- (K) PCC DRIVEWAY PAVEMENT, 8"
- (L) PCC BASE COURSE WIDENING, 8"
- (M) POLYMERIZED HMA SURFACE COURSE, IL-9.5, MIX "D", N50, 3"
- (N) SUBBASE GRANULAR MATERIAL, TYPE B, 6"

1 LEFT TURN LANE
STA. 106+00.00 TO STA. 106+35.00 = TRANSITION FROM 11' TO 10'
STA. 106+35.00 TO STA 108+23.78 = 10'

2 SIDEWALK CURB (SPECIAL) HEIGHT:
STA 104+01.74 TO STA 104+68.17 = 10"
STA 601+47.81 TO STA 601+66.44 = 16"

NOTE:
1. SEE ROW PLANS FOR EXISTING ROW, EXACT TEMPORARY EASEMENT, AND PROPOSED ROW LOCATIONS AND WIDTHS.

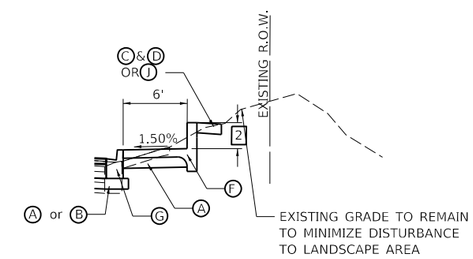

SIDEWALK CURB ADJACENT TO LANDSCAPE AREA
WITH RETAINING WALL

SEE PLANS FOR LOCATIONS
DETAIL MIRRORED FOR LT SIDE LOCATIONS

©Copyright Hanson Professional Services Inc. 2025

HANSON
Hanson Professional Services Inc.

DESIGNED	JFC	7/26/2023 12:00:00 AM
DRAWN	RLA	7/26/2023 12:00:00 AM
REVIEWED	MGD	10/25/2024 12:00:00 AM

MODEL: typical02
FILE NAME: I:\13jobs\13L0177A\CADRoad\Sheet\Plan-Set 3 (8th-10th)\sht-typical02.dgn

Final	USER NAME = ander00846	DESIGNED - SD/JC	REVISED -	STATE OF ILLINOIS DEPARTMENT OF TRANSPORTATION
		DRAWN - RA/CL	REVISED -	
	PLOT SCALE = 0.16666667 ' / in.	CHECKED - MGD	REVISED -	
	PLOT DATE = 3/26/2025	DATE - 10/25/2024 12:00:00 AM	REVISED -	

COURT STREET
PROPOSED TYPICAL SECTIONS

SCALE: N/A | SHEET OF SHEETS | STA. TO STA.

F.A.P. RTE.	SECTION	COUNTY	TOTAL SHEETS	SHEET NO.
693	20-00196-01-RS	TAZEWELL	136	17
	13L0177A	CONTRACT NO. 89859		
		ILLINOIS	FED. AID PROJECT	

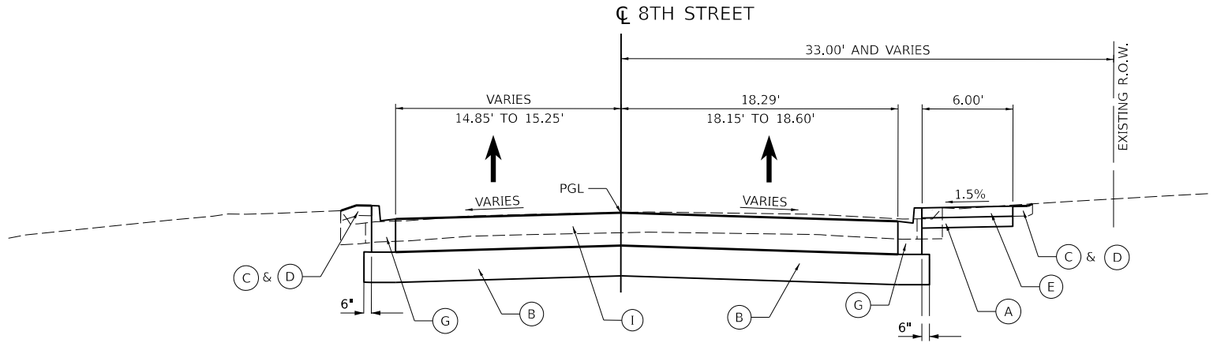

PROPOSED TYPICAL SECTION

STA. 502+22.05 TO STA. 502+82.10

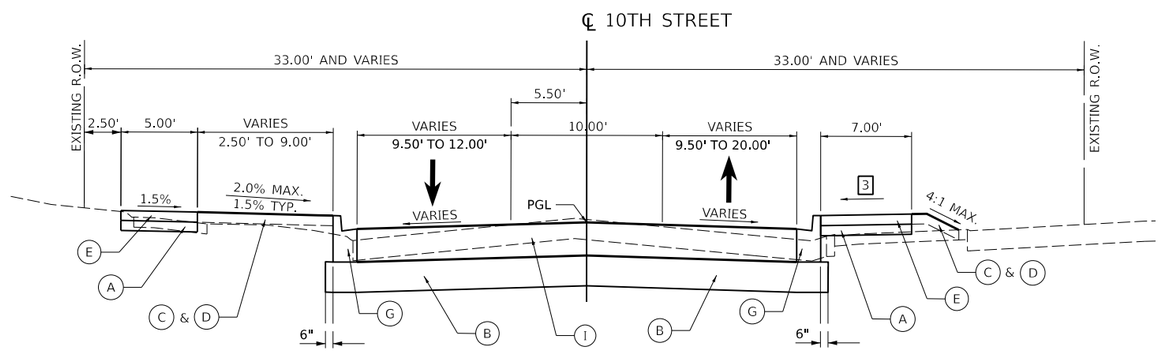

PROPOSED TYPICAL SECTION

STA. 600+48.59 TO STA. 603+03.85

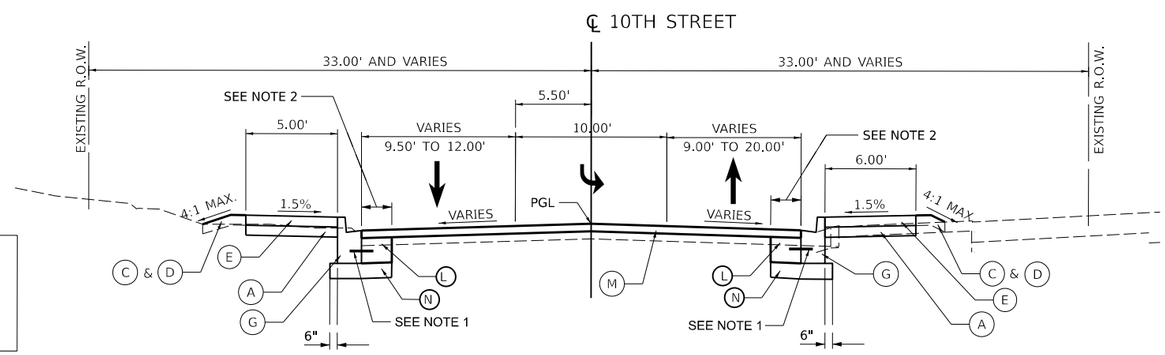

PROPOSED TYPICAL SECTION

STA. 603+03.85 TO STA. 603+88.46

NOTE:

1. NO. 10X18 TIEBARS AT 12" CENTERS
2. PATCHING WIDTH - 2' - 0" AND VARIES

PROPOSED LEGEND

- (A) SUBBASE GRANULAR MATERIAL, TYPE B, 4"
- (B) AGGREGATE BASE COURSE, TYPE A, 12"
- (C) TOPSOIL FURNISH AND PLACE, 4"
- (D) SEEDING CLASS 1A (W/ MULCH METHOD 1)
- (E) PORTLAND CEMENT CONCRETE SIDEWALK, 4 INCH
- (F) COMBINATION CONCRETE CURB-SIDEWALK 4", (SPECIAL)
- (G) COMBINATION CONCRETE CURB AND GUTTER, TYPE B-6.12
- (H) DEPRESSED COMBINATION CONCRETE CURB AND GUTTER, TYPE B-6.12
- (I) PCC PAVEMENT 8.25" (JOINTED)
- (J) PCC DRIVEWAY PAVEMENT, 6"
- (K) PCC DRIVEWAY PAVEMENT, 8"
- (L) PCC BASE COURSE WIDENING, 8"
- (M) POLYMERIZED HMA SURFACE COURSE, IL-9.5, MIX "D", N50, 3"
- (N) SUBBASE GRANULAR MATERIAL, TYPE B, 6"

3 SIDEWALK CROSS SLOPE VARIES
STA 600+28.59 TO STA 600+75.00 = 1.0%
STA 602+25.00 TO STA 603+31.32 = 1.5%

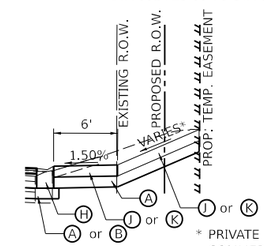

* PRIVATE ENTRANCE MAXIMUM SLOPE = 15%
COMMERCIAL ENTRANCE MAXIMUM SLOPE = 10%

DRIVEWAYS

SEE SCHEDULE FOR LOCATIONS AND PAVING THICKNESS
DETAIL MIRRORED FOR LT SIDE LOCATIONS

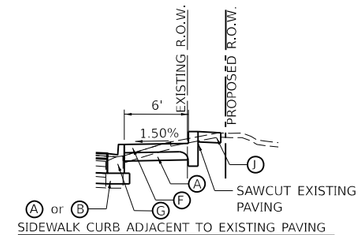

SIDEWALK CURB ADJACENT TO EXISTING PAVING

SEE PLANS FOR LOCATIONS
DETAIL MIRRORED FOR LT SIDE LOCATIONS

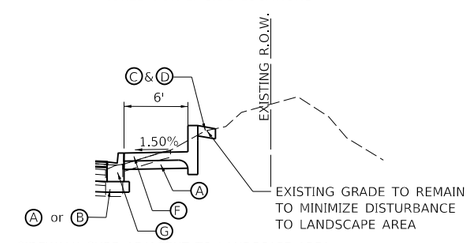

SIDEWALK CURB ADJACENT TO LANDSCAPE AREA

SEE PLANS FOR LOCATIONS
DETAIL MIRRORED FOR LT SIDE LOCATIONS

© Copyright Hanson Professional Services Inc. 2025

HANSON
Hanson Professional Services Inc.

DESIGNED	JFC	7/26/2023 12:00:00 AM
DRAWN	RLA	7/26/2023 12:00:00 AM
REVIEWED	MGD	10/25/2024 12:00:00 AM

MODEL: typical03
FILE NAME: I:\13Jobs\13L0177A\CAD\Road\Sheet\Plan-Set 3 (8th-10th)\ht-typical03.dgn

Final

USER NAME = ander00846	DESIGNED - SD/JC	REVISED -	
	DRAWN - RA/CL	REVISED -	
PLOT SCALE = 0.16666667 ' / in.	CHECKED - MGD	REVISED -	
PLOT DATE = 3/26/2025	DATE - 10/25/2024 12:00:00 AM	REVISED -	

STATE OF ILLINOIS
DEPARTMENT OF TRANSPORTATION

COURT STREET
PROPOSED TYPICAL SECTIONS

SCALE: N/A | SHEET OF SHEETS | STA. TO STA.

F.A.P. RTE.	SECTION	COUNTY	TOTAL SHEETS	SHEET NO.
693	20-00196-01-RS	TAZEWELL	136	18
	13L0177A	CONTRACT NO. 89859		
		ILLINOIS	FED. AID PROJECT	

EARTHWORK SUMMARY

LOCATION		20200100 EARTH EXCAVATION	EXCAVATION TO BE USED IN EMBANKMENT ADJUSTED FOR 25% SHRINKAGE	EMBANKMENT	EARTHWORK BALANCE WASTE (+) OR SHORTAGE (-)
BEGIN STATION	END STATION	CU YD	CU YD	CU YD	CU YD
COURT STREET					
11+65.62	109+84.93	1,130	848	165	683
					0
8TH STREET					0
502+50.00	502+82.10	10	8	0	8
10TH STREET					
600+48.60	601+00.00	10	8	0	8
603+00.00	603+88.46	15	11	10	1
TOTAL		1,165	875	175	700

REMOVAL SCHEDULE

LOCATION		40600982 HOT-MIX ASPHALT SURFACE REMOVAL - BUTT JOINT	44000100 PAVEMENT REMOVAL	44000157 HOT-MIX ASPHALT SURFACE REMOVAL, 2"	44000200 DRIVEWAY PAVEMENT REMOVAL	44000500 COMBINATION CURB AND GUTTER REMOVAL	44000600 SIDEWALK REMOVAL	44003100 MEDIAN REMOVAL
BEGIN STATION	END STATION	SQ YD	SQ YD	SQ YD	SQ YD	FOOT	SQ FT	SQ FT
COURT ST								
11+65.62	102+50.00	186	3,252	0	43	1,030	4,197	66
102+50.00	108+00.00	130	3,553	0	262	1,178	6,528	0
108+00.00	109+84.93	352	2,200	485	101	856	3,898	451
TOTAL		668	9,005	485	406	3,064	14,623	517

MISCELLANEOUS REMOVAL SCHEDULE

LOCATION		X5011100 FOUNDATION REMOVAL	X5012506 CONCRETE WALL REMOVAL	XX008662 REMOVE EXISTING LIGHT POLE	Z0012455 CONCRETE STEP REMOVAL
BEGIN STATION	END STATION	EACH	FOOT	EACH	EACH
COURT ST					
11+65.62	102+50.00	2	138	3	1
102+50.00	108+00.00	0	280	0	1
108+00.00	109+84.93	0	0	0	0
TOTAL		2	418	3	2

PAVEMENT SCHEDULE

LOCATION		31101200 SUBBASE GRANULAR MATERIAL, TYPE B 4"	31101400 SUBBASE GRANULAR MATERIAL, TYPE B 6"	35101100 AGGREGATE BASE COURSE, TYPE A 12"	35400300 PORTLAND CEMENT CONCRETE BASE COURSE WIDENING 8"	40600295 POLYMERIZED BITUMINOUS MATERIALS (TACK COAT)	40604160 POLYMERIZED HOT-MIX ASPHALT SURFACE COURSE, IL-9.5, MIX "D", N50	40800050 INCIDENTAL HOT-MIX ASPHALT SURFACING	42000306 PORTLAND CEMENT CONCRETE PAVEMENT 8 1/4" (JOINTED)	42001300 PROTECTIVE COAT	42300200 PORTLAND CEMENT CONCRETE DRIVEWAY PAVEMENT, 6 INCH	42300400 PORTLAND CEMENT CONCRETE DRIVEWAY PAVEMENT, 8 INCH
BEGIN STATION	END STATION	SQ YD	SQ YD	SQ YD	SQ YD	POUND	TON	TON	SQ YD	SQ YD	SQ YD	SQ YD
COURT ST												
11+65.62	102+50.00	680	0	3,484	0	134	21	21	3,240	3,317	0	77
102+50.00	108+00.00	1,032	0	3,731	0	93	15	0	3,460	3,814	71	283
108+00.00	109+84.93	407	0	1,925	0	204	32	12	1,824	1,824	24	0
10TH STREET												
600+48.59	601+20.00	150	0	271	0	49	8	1	238	342	0	103
603+03.85	603+88.46	119	101	0	56	390	91	0	0	0	0	0
FROM CURB AND SIDEWALK SCHEDULE										2,409		
CONTINGENCY QUANTITY								34				
TOTAL		2,388	101	9,411	56	870	167	68	8,762	11,706	95	463

UNSUITABLE MATERIAL SCHEDULE

LOCATION		20201200 REMOVAL AND DISPOSAL OF UNSUITABLE MATERIAL	21000300 GRANULAR EMBANKMENT, SPECIAL	21001000 GEOTECHNICAL FABRIC FOR GROUND STABILIZATION
BEGIN STATION	END STATION	CU YD	TON	SQ YD
COURT ST				
11+65.62	102+50.00	232	476	697
102+50.00	108+00.00	249	510	746
108+00.00	109+84.93	128	263	385
10TH STREET				
600+48.59	601+20.00	18	37	54
603+03.85	603+88.46	7	14	20
TOTAL		634	1,300	1,902

ASSUMED TO BE 20% OF THE ROADWAY WIDENING AND RECONSTRUCTION AREAS.

CURB AND GUTTER AND SIDEWALK SCHEDULE

LOCATION		42001300 PROTECTIVE COAT	42400100 PORTLAND CEMENT CONCRETE SIDEWALK 4 INCH	42400800 DETECTABLE WARNINGS	60600605 CONCRETE CURB, TYPE B	60603800 COMBINATION CONCRETE CURB AND GUTTER, TYPE B-6.12	X4240130 COMBINATION CONCRETE CURB AND SIDEWALK 4 INCH (SPECIAL)
BEGIN STATION	END STATION	SQ YD	SQ FT	SQ FT	FOOT	FOOT	SQ FT
COURT ST							
11+65.62	102+50.00	769	4,860	87	12	1,014	0
102+50.00	108+00.00	947	5,809	60	55	1,169	295
108+00.00	109+84.93	456	3,032	78	0	529	0
10TH STREET							
600+48.59	601+20.00	74	381	0	0	143	0
603+03.85	603+88.46	163	1,072	58	0	195	0
TOTAL		2,409	15,154	283	67	3,050	295

INLET AND MANHOLE SCHEDULE

LOCATION		60500060 REMOVING INLETS	X6026050 SANITARY MANHOLES TO BE ADJUSTED
STATION	OFFSET	EACH	EACH
COURT ST			
12+15.72	20.13' RT	1	
12+37.18	12.66' LT		1
99+05.21	43.26' LT	1	
99+60.17	50.70' RT	1	
103+34.10	28.11' RT	1	
103+47.12	0.15' LT		1
103+53.10	27.94' LT	1	
103+94.26	33.28' RT	1	
105+92.91	0.55' RT		1
107+23.50	25.09' LT	1	
108+74.84	26.70' RT	1	
108+88.45	1.79' LT		1
109+13.72	46.86' LT	1	
109+47.89	38.77' RT	1	
10TH STREET			
603+12.14	25.10' RT	1	
603+45.15	3.90' LT		1
603+45.24	21.76' RT		1
603+65.57	17.07' LT	1	
603+71.84	19.67' RT	1	
TOTAL		13	6

PAVEMENT PATCHES SCHEDULE

LOCATION		44201357 CLASS C PATCHES, TYPE III, 10 INCH
BEGIN STATION	END STATION	SQ YD
COURT ST		
11+65.62	102+50.00	0
102+50.00	108+00.00	0
108+00.00	109+84.93	0
10TH STREET		
600+48.59	601+20.00	0
603+03.85	603+88.46	36
TOTAL		36

INLET FILTER SCHEDULE

LOCATION		28000510 INLET FILTERS
STATION	OFFSET	EACH
COURT ST		
100+64.98	26.53' RT	1
100+64.98	26.47' LT	1
101+53.98	26.53' RT	1
102+00.00	26.47' LT	1
102+43.98	26.53' RT	1
103+57.63	52.83' RT	1
103+65.39	26.50' LT	1
103+91.44	44.35' RT	1
104+49.89	26.50' RT	1
104+69.98	26.47' LT	1
105+67.36	26.50' LT	1
105+87.13	26.50' RT	1
106+25.37	26.50' LT	1
107+15.63	48.72' LT	1
107+19.84	26.50' LT	1
107+43.84	24.50' RT	1
108+06.41	24.50' RT	1
108+17.11	33.87' LT	1
108+73.05	29.15' RT	1
109+69.54	26.97' RT	1
110+00.00	26.50' RT	1
110+00.00	26.50' LT	1
8TH STREET		
500+78.40	20.80' RT	1
501+13.54	27.03' LT	1
502+05.13	22.20' RT	1
10TH STREET		
601+28.16	18.92' RT	1
602+29.72	32.32' RT	1
603+81.88	17.50' LT	1
608+83.57	20.00' RT	1
TOTAL		29

TEMPORARY PAVEMENT MARKING SCHEDULE

LOCATION		70300150 SHORT TERM PAVEMENT MARKING REMOVAL	70307100 TEMPORARY PAVEMENT MARKING LETTERS AND SYMBOLS - TYPE IV TAPE	70307120 TEMPORARY PAVEMENT MARKING - LINE 4" - TYPE IV TAPE	70307130 TEMPORARY PAVEMENT MARKING - LINE 6" - TYPE IV TAPE	70307140 TEMPORARY PAVEMENT MARKING - LINE 8" - TYPE IV TAPE	70307160 TEMPORARY PAVEMENT MARKING - LINE 12"- TYPE IV TAPE	70307210 TEMPORARY PAVEMENT MARKING - LINE 24"- TYPE IV TAPE
BEGIN STATION	END STATION	SQ FT	SQ FT	FOOT	FOOT	FOOT	FOOT	FOOT
COURT ST								
11+65.62	102+50.00	1,188	162	934	388	405	36	108
102+50.00	108+00.00	1,097	109	1,608	276	315	32	38
108+00.00	109+84.93	1,211	31	541	26	1,120	0	119
TOTAL		3,496	302	3,083	690	1,840	68	265

FENCE SCHEDULE

LOCATION		X6640104 FENCE REMOVAL	XX001249 ORNAMENTAL FENCE
BEGIN STATION	END STATION	FOOT	FOOT
COURT ST			
11+65.62	102+50.00	0	0
102+50.00	108+00.00	0	0
108+00.00	109+84.93	73	79
TOTAL		73	79

STORM SEWER REMOVAL SCHEDULE

LOCATION		55100500 STORM SEWER REMOVAL 12"
BEGIN STATION	END STATION	FOOT
COURT ST		
11+65.62	102+50.00	164
102+50.00	108+00.00	128
108+00.00	109+84.63	209
TOTAL		501

CONCRETE STEPS SCHEDULE

LOCATION		XX006751 STAIR RAILING	XX000300 CONCRETE STEPS
STATION	OFFSET	FOOT	SQ FT
COURT ST			
105+78.46	38.22' RT	13	22
TOTAL		13	22

PAVEMENT MARKING SCHEDULE

LOCATION		78009000 MODIFIED URETHANE PAVEMENT MARKING - LETTERS AND SYMBOLS	78009004 MODIFIED URETHANE PAVEMENT MARKING - LINE 4"	78009006 MODIFIED URETHANE PAVEMENT MARKING - LINE 6"	78009008 MODIFIED URETHANE PAVEMENT MARKING - LINE 8"	78009012 MODIFIED URETHANE PAVEMENT MARKING - LINE 12"	78009024 MODIFIED URETHANE PAVEMENT MARKING - LINE 24"
BEGIN STATION	END STATION	SQ FT	FOOT	FOOT	FOOT	FOOT	FOOT
COURT ST							
11+65.62	102+50.00	162	934	388	405	36	108
102+50.00	108+00.00	109	1,608	276	315	32	38
108+00.00	109+84.93	31	541	26	1,120	0	119
TOTAL		302	3,083	690	1,840	68	265

RETAINING WALL SCHEDULE

LOCATION			50901760 PIPE HANDRAIL	52200900 CONCRETE STRUCTURES (RETAINING WALL)
BEGIN STATION	END STATION	WALL NO.	FOOT	CU YD
COURT STREET				
105+06.55	105+76.34	1	70	21
105+80.79	106+05.86	2	25	8
108+25.28	108+81.84	3		21
TOTAL			95	50

PCC SIDEWALK CURB SCHEDULE

LOCATION			X4240118 PORTLAND CEMENT CONCRETE SIDEWALK CURB
START STATION	OFFSET	HEIGHT (INCH)	FOOT
COURT ST.			
104+55.79	33.08' RT	10.00	24
105+02.84	43.08' RT	16.00	12
108+81.44	48.88' RT	16.00	19
TOTAL			55

TREE REMOVAL SCHEDULE

LOCATION		20100210 TREE REMOVAL (OVER 15 UNITS DIAMETER)
STATION	OFFSET	UNIT
COURT ST		
603+24.94	39.69' RT	48
TOTAL		48

FILL EXISTING STORM SEWERS SCHEDULE

LOCATION				X6050205 FILLING EXISTING STORM SEWERS
BEGIN STATION	BEGIN OFFSET	END STATION	END OFFSET	CU YD
COURT STREET				
105+92.91	0.55' RT	107+19.02	32.63' LT	4
TOTAL				4

© Copyright Hanson Professional Services Inc. 2025

HANSON
Hanson Professional Services Inc.

DESIGNED	JFC	7/26/2023 12:00:00 AM
DRAWN	RLA	7/26/2023 12:00:00 AM
REVIEWED	MGD	10/25/2024 12:00:00 AM

MODEL: schedules
FILE NAME: K:\13Jobs\13L0177A\CADRoad\Sheet\Plan-Set 3 (8th-10th)\cnt-schedule01.dgn

Final

USER NAME = ander00846	DESIGNED - SD/JC	REVISED -	
	DRAWN - RA/CL	REVISED -	
PLOT SCALE = 0.167 ' / in.	CHECKED - MGD	REVISED -	
PLOT DATE = 3/26/2025	DATE - 10/25/2024 12:00:00 AM	REVISED -	

STATE OF ILLINOIS
DEPARTMENT OF TRANSPORTATION

COURT STREET
SCHEDULE OF QUANTITIES

SCALE: N/A | SHEET OF SHEETS | STA. TO STA.

F.A.P. RTE.	SECTION	COUNTY	TOTAL SHEETS	SHEET NO.
693	20-00196-01-RS	TAZEWELL	136	19
	13L0177A	CONTRACT NO. 89859		
		ILLINOIS	FED. AID PROJECT	

SIGN SCHEDULE

LOCATION					72000100	72800100	XX008729
					SIGN PANEL - TYPE 1	TELESCOPING STEEL SIGN SUPPORT	REMOVE AND REINSTALL SIGN PANEL
STATION	OFFSET	PANEL	DESCRIPTION	PLACEMENT	SQ FT	FOOT	EACH
			COURT ST.				
11+81.05	28.96' LT	R6-1	ONE WAY	SIGNAL POST			1
		W1-6R	RIGHT ARROW	SIGNAL POST			1
		R5-1	DO NOT ENTER	SIGNAL POST			1
11+85.86	43.77' LT	R6-1	ONE WAY	MASTARM POST			1
		W1-6R	RIGHT ARROW	MASTARM POST			1
		D4-I101	BUSINESS DISTRICT	MASTARM POST			1
12+23.30	37.58' RT	R7-1	NO PARKING ANY TME	SIGNAL POST	1.50		
99+19.33	41.55' LT	R6-6	BEGIN ONE WAY	MASTARM POST			1
99+42.90	35.31' LT	I-8	LIBRARY	NEW SIGN POST		17.25	1
		M6-1	RIGHT ARROW	NEW SIGN POST			1
100+34.93	35.14' LT	R3-8	LT ONLY DBL RT ONLY	NEW SIGN POST		19.25	1
		D4-I101	BUSINESS DISTRICT	NEW SIGN POST			1
		M6-1	RIGHT ARROW	NEW SIGN POST			1
102+88.75	31.11' RT	STREET SIGN-1	COURT ST	NEW SIGN POST	2.50	18.50	
		STREET SIGN-2	9TH ST	NEW SIGN POST	2.50		
103+02.24	41.50' LT	R1-1	STOP SIGN	NEW SIGN POST			1
103+30.66	63.5' LT	R7-1	NO PARKING ANY TME	NEW SIGN POST	1.50	14.50	
103+93.50	41.32' RT	R1-1	STOP SIGN	NEW SIGN POST		15.50	1
104+21.32	35.10' RT	R2-1	SPEED LIMIT 35 MPH	NEW SIGN POST		14.50	1
		R7-1	NO PARKING ANY TME	NEW SIGN POST	1.50		
104+22.39	34.97' LT	R2-1	SPEED LIMIT 35 MPH	NEW SIGN POST		15.50	1
		R7-1	NO PARKING ANY TME	NEW SIGN POST	1.50		
108+78.79	51.45' RT	R5-2	NO TRUCK ROUTE	MASTARM POST			1
			10TH ST.				
603+26.22	38.12' LT	STREET SIGN-3	ROYAL AVE	NEW SIGN POST	2.50	18.50	
		STREET SIGN-4	10TH ST	NEW SIGN POST	2.50		
		R1-1	STOP SIGN	NEW SIGN POST			1
603+64.20	33.71' RT	STREET SIGN-3	ROYAL AVE	NEW SIGN POST	2.50	18.50	
		STREET SIGN-4	10TH ST	NEW SIGN POST	2.50		
		R1-1	STOP SIGN	NEW SIGN POST			1
			FROM TRAFFIC SIGNAL PLANS		31.00		
			TOTAL		52.00	152.00	19

TOPSOIL, SEEDING, AND EROSION CONTROL SCHEDULE

LOCATION		21101615	25000110	25000400	25000500	25000600	25100105	28000250	28000400
		TOPSOIL FURNISH AND PLACE, 4"	SEEDING, CLASS 1A	NITROGEN FERTILIZER NUTRIENT	PHOSPHORUS FERTILIZER NUTRIENT	POTASSIUM FERTILIZER NUTRIENT	MULCH, METHOD 1	TEMPORARY EROSION CONTROL SEEDING	PERIMETER EROSION BARRIER
BEGIN STATION	END STATION	SQ YD	ACRE*	POUND	POUND	POUND	ACRE*	POUND	FOOT
COURT ST									
153+95.00	159+50.00	235	235 (SQ YD)	7	7	7	235 (SQ YD)	14	342
159+50.00	165+00.00	348	348 (SQ YD)	10	10	10	348 (SQ YD)	22	130
165+00.00	170+50.00	217	217 (SQ YD)	7	7	7	217 (SQ YD)	14	192
TOTAL		800	0.25 (ACRES)	24	24	24	0.25 (ACRES)	50	664

*SEEDING AND MULCH ITEMS ARE PAID FOR IN ACRE UNIT. SHEET SUBTOTALS SHOWN IN SQ YD FOR ADDITIONAL DETAIL

© Copyright Hanson Professional Services Inc. 2025

HANSON
Hanson Professional Services Inc.

DESIGNED	JFC	7/26/2023 12:00:00 AM
DRAWN	RLA	7/26/2023 12:00:00 AM
REVIEWED	MGD	10/25/2024 12:00:00 AM

MODEL: schedules
FILE NAME: I:\13jobs\13L0177A\CAD\Road\Sheet\Plan-Set 3 (8th-10th)\sht-schedule02.dgn

Final

USER NAME = ander00846	DESIGNED - SD/JC	REVISED -	
	DRAWN - RA/CL	REVISED -	
PLOT SCALE = 0.167 ' / in.	CHECKED - MGD	REVISED -	
PLOT DATE = 3/26/2025	DATE - 10/25/2024 12:00:00 AM	REVISED -	

STATE OF ILLINOIS
DEPARTMENT OF TRANSPORTATION

COURT STREET
SCHEDULE OF QUANTITIES

SCALE: N/A | SHEET OF SHEETS | STA. TO STA.

F.A.P. RTE.	SECTION	COUNTY	TOTAL SHEETS	SHEET NO.
693	20-00196-01-RS	TAZEWELL	136	20
	13L0177A	CONTRACT NO. 89859		
	ILLINOIS	FED. AID PROJECT		

BENCHMARK #18 STA. 99+91.94, 29.36' RT., ELEV. = 508.75
"X" AT NORTH CAP BOLT AT FIRE HYDRANT EAST OF S.E. QUADRANT OF COURT ST. AND 8TH ST.

BENCHMARK #17 STA. 103+22.55, 32.02' RT., ELEV. = 513.05
"X" AT NORTH CAP BOLT AT FIRE HYDRANT SOUTH SIDE OF COURT ST. AT S. 9TH ST.

BENCHMARK #16 STA. 601+34.91, 21.81' LT., ELEV. = 519.20
"X" AT NORTH CAP BOLT AT FIRE HYDRANT SOUTH OF S.W. QUADRANT OF COURT ST. AND 10TH ST.

N

0 50 100 150
SCALE IN FEET

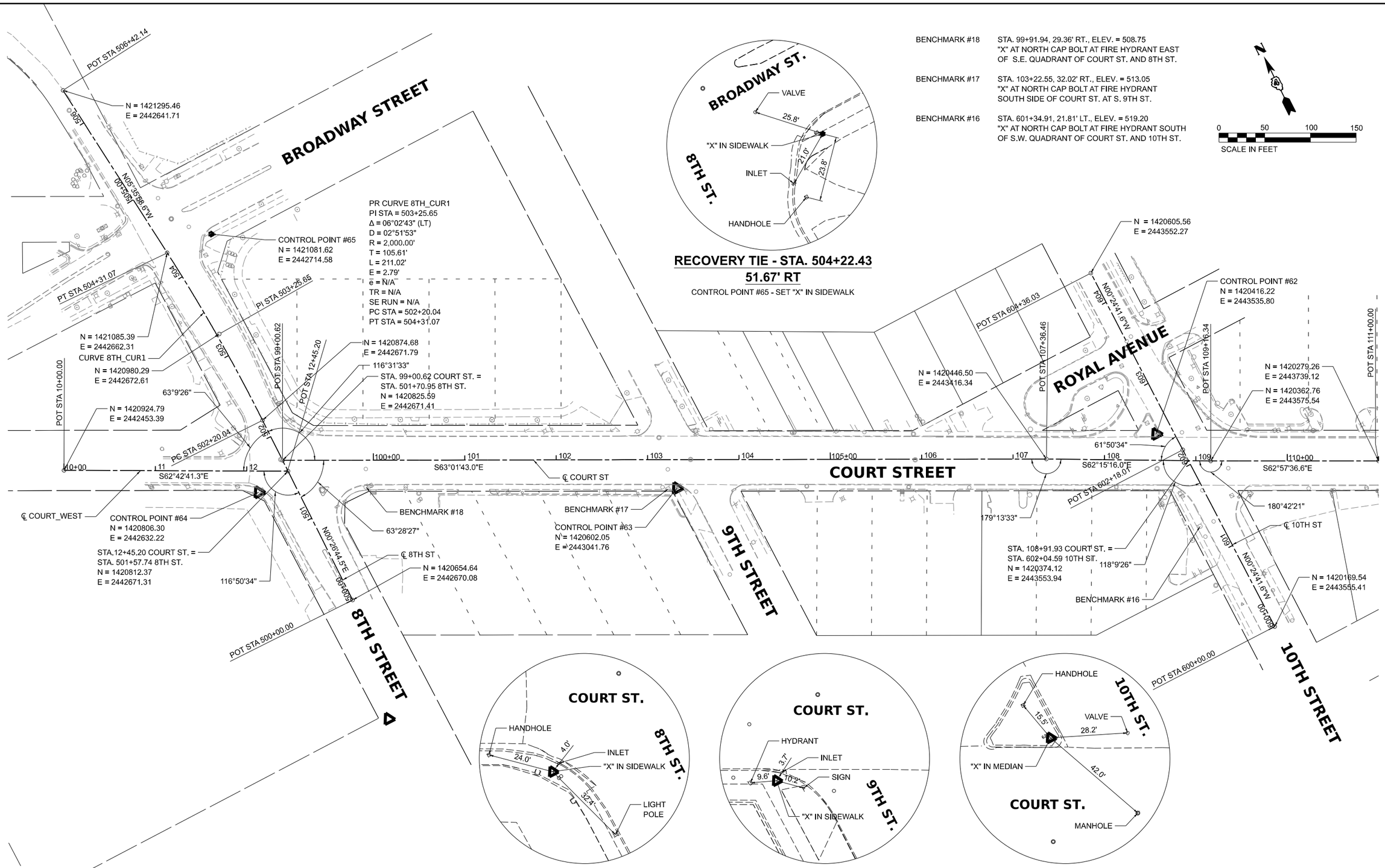

RECOVERY TIE - STA. 504+22.43
51.67' RT
CONTROL POINT #65 - SET "X" IN SIDEWALK

RECOVERY TIE - STA. 12+13.25
23.32' RT
CONTROL POINT #64 - SET "X" IN SIDEWALK

RECOVERY TIE - STA. 103+32.07
31.26' RT
CONTROL POINT #63 - SET "X" IN SIDEWALK

RECOVERY TIE - STA. 108+56.28
28.81' LT
CONTROL POINT #62 - SET "X" IN MEDIAN

© Copyright Hanson Professional Services Inc. 2025

HANSON
Hanson Professional Services Inc.

DESIGNED	FC	7/26/2023 12:00:00 AM
DRAWN	RLA	7/26/2023 12:00:00 AM
REVIEWED	MGD	10/25/2024 12:00:00 AM

MODEL: sht-ABT01
FILE NAME: k:\13jobs\13L0177A\CAD\Road\Sheet\Plan-Set 3 (8th-10th)\sht-ABT01.dgn

Final

USER NAME = ander00846	DESIGNED - SD/JC	REVISED -	
	DRAWN - RA/CL	REVISED -	
PLOT SCALE = 0.16666667 ' / in.	CHECKED - MGD	REVISED -	
PLOT DATE = 3/26/2025	DATE - 10/25/2024 12:00:00 AM	REVISED -	

STATE OF ILLINOIS
DEPARTMENT OF TRANSPORTATION

COURT STREET
ALIGNMENTS, BENCHMARKS, AND TIES

SCALE: 1" = 50' | SHEET OF SHEETS | STA. TO STA.

F.A.P. RTE.	SECTION	COUNTY	TOTAL SHEETS	SHEET NO.
693	20-00196-01-RS	TAZEWELL	136	21
	13L0177A	CONTRACT NO. 89859		
	ILLINOIS	FED. AID PROJECT		

TRAFFIC CONTROL GENERAL NOTES

1. TRAFFIC CONTROL IS AN INTEGRAL PART OF THE CONTRACTOR'S MEANS AND METHODS FOR COMPLETING THE WORK. THE REQUIREMENTS SET FORTH HEREIN AND WITHIN THE PROJECT SPECIFICATIONS PRESENT THE MINIMUM REQUIREMENTS FOR THE CONTROL AND PROTECTION OF PEDESTRIAN, BICYCLE, AND VEHICULAR TRAFFIC. THE CONTRACTOR SHALL IMPLEMENT ALL ADDITIONAL MEASURES NECESSARY TO FULLY PROTECT PEDESTRIANS, BICYCLES, VEHICLES AND THE CONTRACTOR'S WORK FORCE FROM THE CONTRACTOR'S WORK ACTIVITIES AND FROM PASSING TRAFFIC. FIELD MODIFICATION OF THE TRAFFIC CONTROL SCHEME DEPICTED IN THE TRAFFIC CONTROL PLANS SHALL BE APPROVED BY THE ENGINEER.
   THE CONTRACTOR'S TRAFFIC CONTROL PLAN AND SEQUENCE OF CONSTRUCTION SHALL INCORPORATE THESE REQUIREMENTS:

   A. A MINIMUM OF ONE 10.00 FEET WIDE LANE SHALL BE PROVIDED IN EACH DIRECTION AT ALL TIMES.

   B. WORK ZONE SPEED LIMIT SHALL BE 30 MPH.

2. ACCESS TO COMMERCIAL AND RESIDENTIAL ENTRANCES DURING THE VARIOUS STAGES SHALL BE MAINTAINED AS SHOWN ON THE PLANS OR AS DIRECTED BY THE ENGINEER. THE CONTRACTOR SHALL MAINTAIN AT LEAST ONE POINT OF ACCESS TO EACH PROPERTY IN THE WORK AREA AT ALL TIMES.

3. TRAFFIC CONTROL AND PROTECTION SHALL BE IN ACCORDANCE WITH THE APPLICABLE PORTIONS OF THE IDOT STANDARD SPECIFICATIONS FOR ROAD AND BRIDGE CONSTRUCTION; THE APPLICABLE GUIDELINES CONTAINED IN THE MANUAL ON UNIFORM TRAFFIC CONTROL DEVICES FOR STREETS AND HIGHWAYS (MUTCD); THE TRAFFIC CONTROL PLANS, IDOT TRAFFIC CONTROL GENERAL STANDARDS LISTED ON THE GENERAL NOTES, LEGEND AND THE STANDARD SPECIFICATIONS.

4. TRAFFIC CONTROL AND PROTECTION WILL BE PAID FOR AT THE CONTRACT LUMP SUM PRICE FOR TRAFFIC CONTROL AND PROTECTION (SPECIAL). THE TRAFFIC CONTROL AND PROTECTION INSTALLATION FOR EACH WORK AREA WILL NOT BE PAID FOR SEPARATELY, BUT SHALL BE INCLUDED IN THE LUMP SUM PRICE FOR THIS ITEM. ADJUSTMENTS TO THE LOCATIONS OF TRAFFIC CONTROL DEVICES AND TRAFFIC CONTROL SIGNS REQUIRED FOR THE WORK AS SHOWN ON THE TRAFFIC CONTROL PLANS OR AS DIRECTED BY THE ENGINEER, EXCLUDING ALL DETOUR SIGNS, SHALL BE INCLUDED IN THE LUMP SUM PRICE OF TRAFFIC CONTROL AND PROTECTION (SPECIAL).

5. TRAFFIC CONTROL SURVEILLANCE WILL NOT BE PAID FOR SEPARATELY FOR THIS PROJECT. THE CONTRACTOR SHALL BE RESPONSIBLE FOR INSPECTING AND MAINTAINING ALL TRAFFIC CONTROL DEVICES AT ALL TIMES INCLUDING NIGHTTIME, WEEKENDS, AND ANY TIME WORKERS ARE NOT PRESENT. THIS WORK SHALL BE PERFORMED IN ACCORDANCE WITH THE PROJECT SPECIAL PROVISIONS. THE COST OF ALL LABOR AND MATERIALS FOR THE SURVEILLANCE AND MAINTENANCE OF TRAFFIC CONTROL DEVICES SHALL BE INCLUDED IN THE LUMP SUM PRICE OF TRAFFIC CONTROL AND PROTECTION (SPECIAL).

6. THE CONTRACTOR SHALL COVER OR REMOVE EXISTING SIGNS THAT CONFLICT WITH THE TRAFFIC CONTROL PLANS AS DIRECTED BY THE ENGINEER. THE CONTRACTOR SHALL PROVIDE ALL SIGNS AS SHOWN ON THE TRAFFIC CONTROL PLANS AND ADDITIONAL SIGNS AS REQUIRED BY THE LISTED HIGHWAY STANDARDS. THE PROPOSED TRAFFIC CONTROL SIGNS SHALL BE INSTALLED IN ACCORDANCE WITH STANDARD 701901, THE DETAILS IN THE PLANS, AND AS DIRECTED BY THE ENGINEER.

7. FLASHING LIGHTS SHALL BE PLACED ON ALL TYPE III BARRICADES IN ACCORDANCE WITH STANDARD 701901 UNLESS OTHERWISE DIRECTED BY THE ENGINEER. STEADY BURN LIGHTS SHALL BE PLACED ON ALL DRUMS AND BARRICADES (EXCEPT FOR TYPE III BARRICADES) IN ACCORDANCE WITH STANDARD 701901 UNLESS OTHERWISE DIRECTED BY THE ENGINEER.

8. TRAFFIC CONTROL DEVICES MAY BE ADJUSTED TO FIT FIELD CONDITIONS AS APPROVED BY THE ENGINEER. ADJUSTMENTS TO THE TRAFFIC CONTROL DEVICES SHALL BE INCLUDED IN THE LUMP SUM PRICE OF TRAFFIC CONTROL AND PROTECTION (SPECIAL), AND NO ADDITIONAL COMPENSATION WILL BE ALLOWED. TRAFFIC CONTROL DEVICES SHALL BE REMOVED AS DIRECTED BY THE ENGINEER.

9. THE CONTRACTOR SHALL PROVIDE AND INSTALL TWO (2) WEIGHTED SAND BAGS ON EACH TYPE II BARRICADE USED (ONE WEIGHTED SAND BAG ACROSS EACH BOTTOM RAIL) AND A MINIMUM OF FOUR (4) WEIGHTED SAND BAGS ON EACH TYPE III BARRICADE USED.

10. ALL FLAGGERS NECESSARY FOR MILLING, PRIMING, PAVING AND ANY OTHER FLAGGING OPERATIONS NEEDED SHALL BE INCLUDED IN TRAFFIC CONTROL AND PROTECTION (SPECIAL).

11. TEMPORARY PAVEMENT MARKINGS:
    A. SHALL BE FULL LANE LAYOUT AT SIGNALIZED INTERSECTIONS AS DIRECTED BY THE ENGINEER, INCLUDING LEFT-TURN ARROWS. CENTERLINE SKIP DASHES SHALL BE PROVIDED BETWEEN OVERLAY OPERATIONS. STOP LINES SHALL BE PROVIDED ON SIDE STREETS AS DIRECTED BY THE ENGINEER. REFER TO THE PAVEMENT MARKING PLANS FOR ADDITIONAL INFORMATION.
    B. WORK ZONE PAVEMENT MARKING SHALL BE INSTALLED AS REQUIRED BY THE TRAFFIC CONTROL STANDARDS, AS SHOWN ON THE TRAFFIC CONTROL PLANS, AND AS DIRECTED BY THE ENGINEER.
    C. ONLY PAVEMENT MARKING TAPE, TYPE III SHALL BE ALLOWED ON THE FINAL WEARING SURFACE.

12. TO THE FULLEST EXTENT POSSIBLE, THE EXISTING PAVEMENT MARKINGS SHALL BE USED FOR TRAFFIC CONTROL. THE CONTRACTOR SHALL REMOVE THE EXISTING PAVEMENT MARKINGS OR THE PREVIOUSLY INSTALLED WORK ZONE PAVEMENT MARKINGS THAT CONFLICT WITH THE TRAFFIC CONTROL PLAN DESIGNATED FOR EACH CONSTRUCTION STAGE OR AS DIRECTED BY THE ENGINEER.
    A. REMOVAL OF EXISTING PAVEMENT MARKINGS, WHERE SHOWN IN THE PLANS, WILL BE PAID FOR AS PAVEMENT MARKING REMOVAL - GRINDING.
    B. PLACEMENT AND REMOVAL OF WORK ZONE PAVEMENT MARKINGS REQUIRED BY THE TRAFFIC CONTROL STANDARDS WILL BE PAID SEPARATELY.

13. THE WORK ZONES SHOWN ON THE TRAFFIC CONTROL PLANS AND THE PLACEMENT OF SIGNS, BARRICADES, AND OTHER TRAFFIC CONTROL DEVICES DEPICTED HEREIN ARE SCHEMATIC IN NATURE. FOR SPECIFIC INSTRUCTIONS ON THE INCLUSION OF SIGNS, BARRICADES, AND OTHER TRAFFIC CONTROL DEVICES FOR INDIVIDUAL WORK ZONES, AND THE PLACEMENT THEREOF, REFER TO THE TRAFFIC CONTROL STANDARDS, THE STANDARD SPECIFICATIONS FOR ROAD AND BRIDGE CONSTRUCTION, AND THE TECHNICAL SPECIFICATIONS.

14. THE INITIAL TRAFFIC CONTROL SETUP AND SUBSEQUENT CHANGES BETWEEN TRAFFIC CONTROL STAGES SHALL BE PERFORMED DURING NON-PEAK TRAFFIC HOURS AS DIRECTED BY THE ENGINEER. FLAGGERS SHALL BE REQUIRED DURING THE INITIAL SETUP AND SUBSEQUENT CHANGES OF THE TRAFFIC CONTROL DEVICES AS DIRECTED BY THE ENGINEER. PEAK HOURS ARE GENERALLY NEAR THE START/END OF THE SCHOOL DAY, 7:30 - 9:00 A.M. AND 2:00 - 4:00 P.M.

15. PROPER DRAINAGE SHALL BE MAINTAINED AT ALL TIMES WITHIN THE PROJECT LIMITS. THE CONTRACTOR SHALL BE RESPONSIBLE FOR COORDINATING THIS WORK AND ANY CONSTRUCTION TECHNIQUES NECESSARY TO ENSURE PROPER DRAINAGE IS MAINTAINED AT ALL TIMES. THE COST OF ALL LABOR, EQUIPMENT, AND MATERIALS TO MAINTAIN PROPER DRAINAGE WILL NOT BE PAID FOR SEPARATELY, BUT SHALL BE INCLUDED IN THE COST OF THE MISCELLANEOUS PAY ITEMS INVOLVED.

LEGEND

- POST MOUNTED SIGN LOCATION
- TYPE III BARRICADE WITH WARNING LIGHTS
- DRUM WITH WARNING LIGHTS
- PROPOSED WORK AREA
- DIRECTION OF TRAFFIC
- PORTABLE CHANGEABLE MESSAGE SIGN
- ARROW BOARD
- PREVIOUSLY CONSTRUCTED PHASE

PEDESTRIAN NOTES AND DETAILS

1. THE CONTRACTOR MUST MAINTAIN A CONTINUOUS 5 FEET PEDESTRIAN ZONE ALONG ALL STREETS.

2. THE CONTRACTOR SHALL MAINTAIN PEDESTRIAN ACCESS ABOVE TO ADJACENT PROPERTIES THAT SHALL BE UNINTERRUPTED UNTIL THE WALKWAY IS FULLY RESTORED. THE CONTRACTOR SHALL ALSO BE RESPONSIBLE FOR THE INSTALLATION AND MAINTENANCE OF SIGNAGE AND OTHER ITEMS TO ENSURE SAFE PEDESTRIAN ACCESS.

3. USE ONE "PEDESTRIAN WALKWAY (ARROW)" (BLACK LEGEND ON WHITE REFLECTORIZED BACKGROUND) SIGN AT EACH END OF EACH SIDEWALK SECTION BEING RECONSTRUCTED.

4. AT EACH POINT OF CLOSURE, SUFFICIENT NUMBERS OF BARRICADES MUST BE USED TO COMPLETELY CLOSE THE PATHWAY.

5. PEDESTRIAN WALKWAYS MUST BE MAINTAINED FREE OF ANY OBSTRUCTIONS AND HAZARDS SUCH AS HOLES, DEBRIS, MUD, CONSTRUCTION EQUIPMENT, STORED MATERIALS, ETC. AND MUST BE BROOM SWEPT DAILY OR AS DIRECTED BY THE ENGINEER.

6. ALL HAZARDS NEAR OR ADJACENT TO WALKWAYS MUST BE CLEARLY DELINEATED.

7. THE CONTRACTOR MUST MAINTAIN DISABLED PERSON PEDESTRIAN ACCESS TO CROSSWALKS ACROSS COURT STREET AND ALL SIDE STREETS AT ALL TIMES VIA ADA COMPLIANT WOOD FRAME CONSTRUCTED WALKWAYS AND RAMPS THROUGH THE WORK ZONES. THESE ACCESS LOCATIONS MUST BE OBSERVED AND PROTECTED BY THE CONTRACTOR AT ALL TIMES. THE COSTS ASSOCIATED WITH COMPLYING WITH THIS REQUIREMENT SHALL BE CONSIDERED AS INCLUDED IN TRAFFIC CONTROL AND PROTECTION (SPECIAL).

8. SIDEWALK MUST NOT BE CLOSED ON BOTH SIDES OF THE ROAD AT THE SAME TIME WITHOUT PROVIDING AN ALTERNATE ACCESSIBLE PEDESTRIAN PATH.

TRAFFIC CONTROL BILL OF MATERIALS

ITEM NUMBER	DESCRIPTION	UNIT	QTY
40201000	AGGREGATE FOR TEMPORARY ACCESS	TON	250
59300100	CONTROLLED LOW-STRENGTH MATERIAL	CU YD	100
70107025	CHANGEABLE MESSAGE SIGN	CAL DA	120
X7010216	TRAFFIC CONTROL AND PROTECTION, (SPECIAL)	L SUM	1

NOTE: APPROXIMATE QUANTITIES FOR THE ABOVE ITEMS HAVE BEEN INCLUDED FOR THIS WORK TO HELP ESTABLISH UNIT PRICES.

© Copyright Hanson Professional Services Inc. 2025
HANSON Hanson Professional Services Inc.

DESIGNED JFC 7/26/2023 12:00:00 AM
DRAWN RLA 7/26/2023 12:00:00 AM
REVIEWED MGD 10/25/2024 12:00:00 AM

MODEL: mot General Notes
FILE NAME: k:\Jobs\13L0177A\CAD\Road\Sheet\Plan-Set 3 (8ft+10ft)\sht-matnotes01.dgn

Final

USER NAME = ander00846	DESIGNED - SD/JC	REVISED -	
	DRAWN - RA/CL	REVISED -	
PLOT SCALE = 0.167 ' / in.	CHECKED - MGD	REVISED -	
PLOT DATE = 3/26/2025	DATE - 10/25/2024 12:00:00 AM	REVISED -	

STATE OF ILLINOIS
DEPARTMENT OF TRANSPORTATION

COURT STREET
CONSTRUCTION STAGING NOTES

SCALE: N/A | SHEET OF SHEETS | STA. TO STA.

F.A.P. RTE.	SECTION	COUNTY	TOTAL SHEETS	SHEET NO.
693	20-00196-01-RS	TAZEWELL	136	22
	13L0177A	CONTRACT NO. 89859		
		ILLINOIS	FED. AID PROJECT	

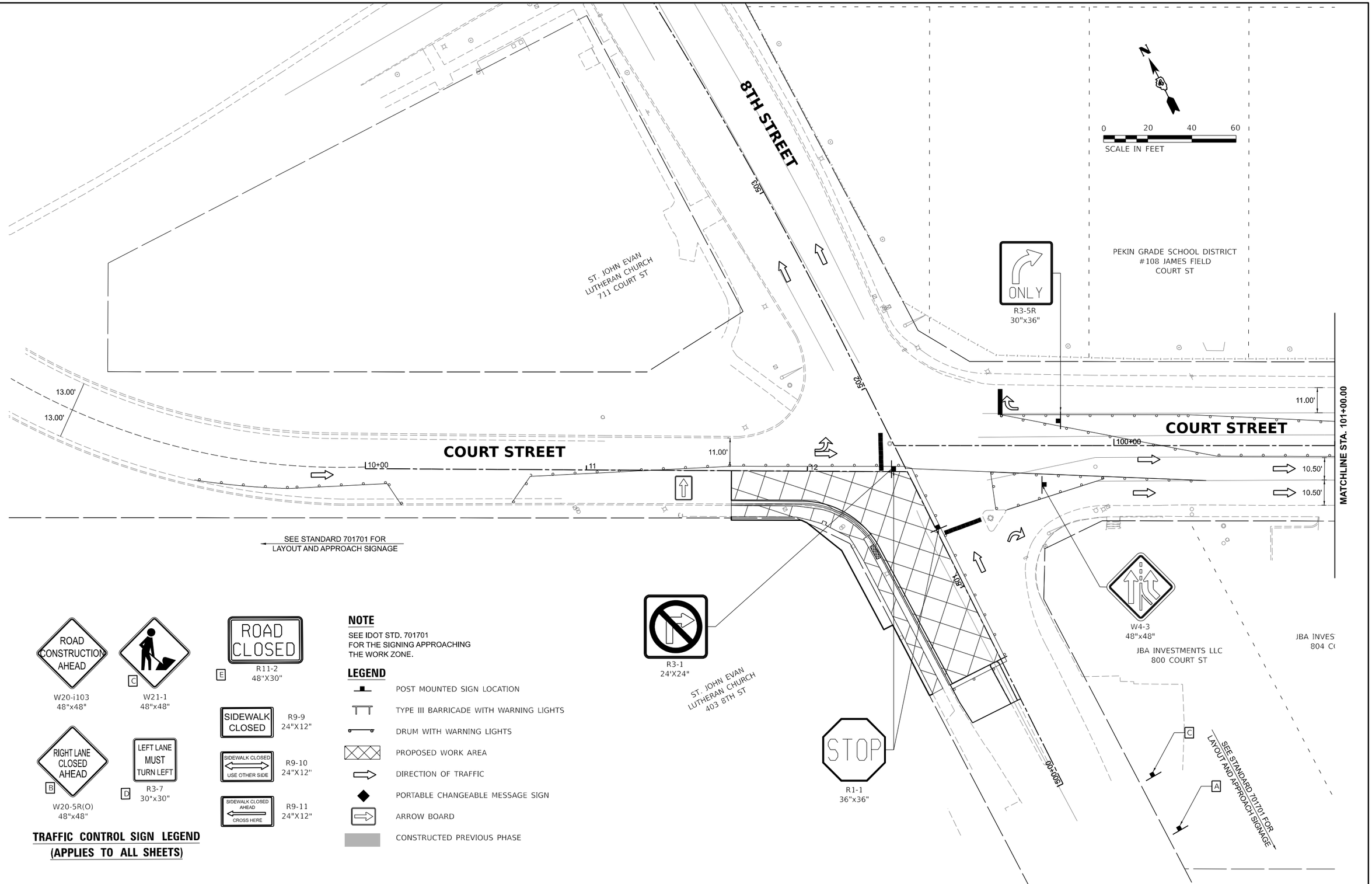

TRAFFIC CONTROL SIGN LEGEND
(APPLIES TO ALL SHEETS)

NOTE

SEE IDOT STD. 701701
FOR THE SIGNING APPROACHING
THE WORK ZONE.

LEGEND

- POST MOUNTED SIGN LOCATION
- TYPE III BARRICADE WITH WARNING LIGHTS
- DRUM WITH WARNING LIGHTS
- PROPOSED WORK AREA
- DIRECTION OF TRAFFIC
- PORTABLE CHANGEABLE MESSAGE SIGN
- ARROW BOARD
- CONSTRUCTED PREVIOUS PHASE

© Copyright Hanson Professional Services Inc. 2025

HANSON
Hanson Professional Services Inc.

DESIGNED	JFC	7/26/2023 12:00:00 AM
DRAWN	RLA	7/26/2023 12:00:00 AM
REVIEWED	MGD	10/25/2024 12:00:00 AM

MODEL: AL_CourtSt - Plan 1 [Sheet]
FILE NAME: K:\13Jobs\13L0177A\CAD\RoadSheet\figures\8th-10th\ORD-MOT1a.dgn

Final

USER NAME = ander00846	DESIGNED - SD/JC	REVISED -	
	DRAWN - RA/CL	REVISED -	
PLOT SCALE = 0.16666667 ' / in.	CHECKED - MGD	REVISED -	
PLOT DATE = 3/26/2025	DATE - 10/25/2024 12:00:00 AM	REVISED -	

STATE OF ILLINOIS
DEPARTMENT OF TRANSPORTATION

COURT STREET
CONSTRUCTION STAGING 1A

SCALE: 1" = 20' | SHEET OF SHEETS | STA. TO STA.

F.A.P. RTE.	SECTION	COUNTY	TOTAL SHEETS	SHEET NO.
693	20-00196-01-RS	TAZEWELL	136	23
	13L0177A	CONTRACT NO. 89859		
		ILLINOIS	FED. AID PROJECT	

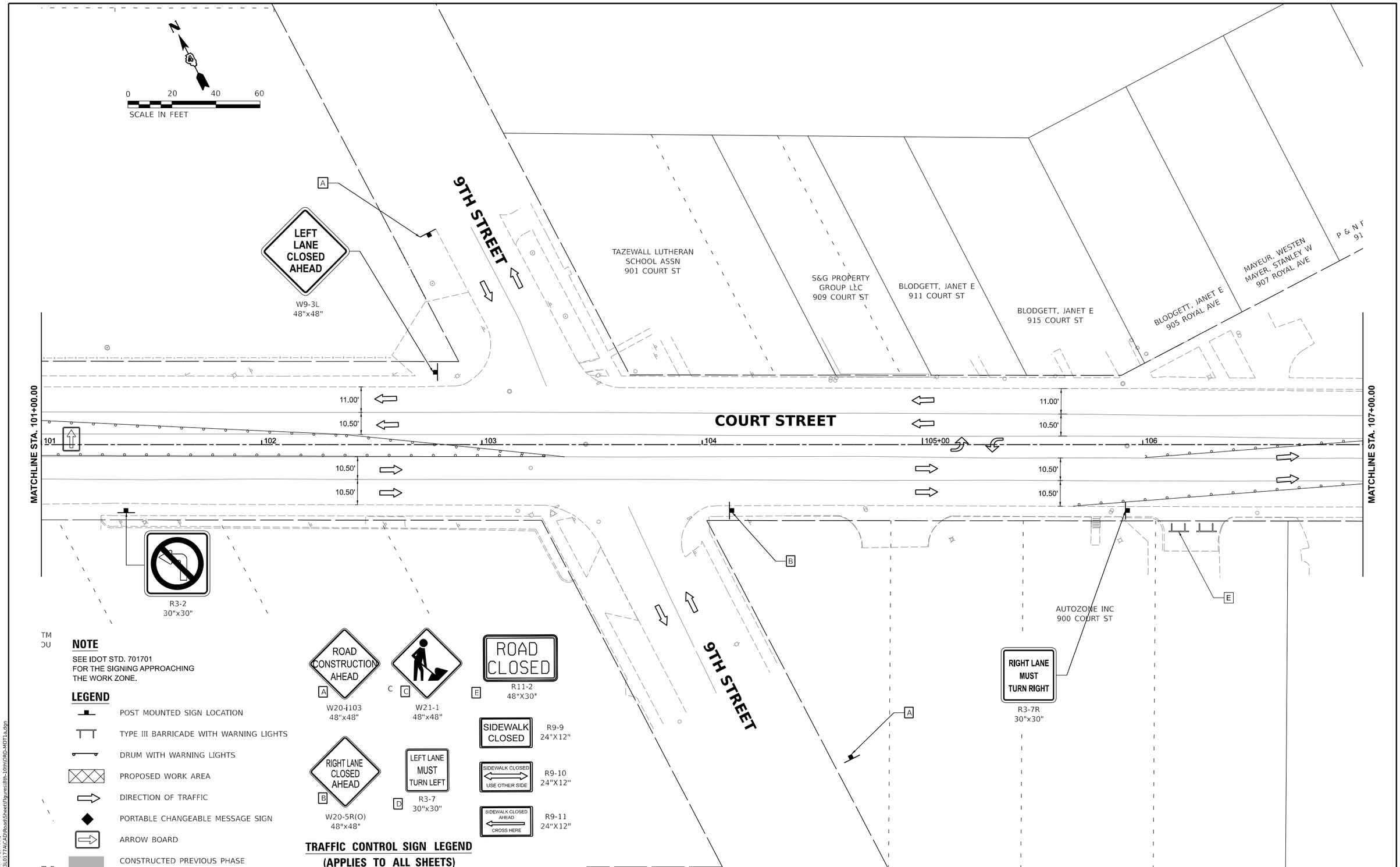

© Copyright Hanson Professional Services Inc. 2025

HANSON
Hanson Professional Services Inc.

DESIGNED	JFC	7/26/2023 12:00:00 AM
DRAWN	RLA	7/26/2023 12:00:00 AM
REVIEWED	MGD	10/25/2024 12:00:00 AM

MODEL: AL_CourtSt - Plan 2 [Sheet]
FILE NAME: k:\Jobs\13L0177A\CAD\Road\Sheet\Figures\8th-10th\ORD-MOT1a.dgn

Final

USER NAME = ander00846	DESIGNED - SD/JC	REVISED -	
	DRAWN - RA/CL	REVISED -	
PLOT SCALE = 0.16666667 ' / in.	CHECKED - MGD	REVISED -	
PLOT DATE = 3/26/2025	DATE - 10/25/2024 12:00:00 AM	REVISED -	

STATE OF ILLINOIS
DEPARTMENT OF TRANSPORTATION

COURT STREET
CONSTRUCTION STAGING 1A

SCALE: 1" = 20' | SHEET OF SHEETS | STA. TO STA.

F.A.P. RTE.	SECTION	COUNTY	TOTAL SHEETS	SHEET NO.
693	20-00196-01-RS	TAZEWELL	136	24
	13L0177A	CONTRACT NO. 89859		
		ILLINOIS	FED. AID PROJECT	

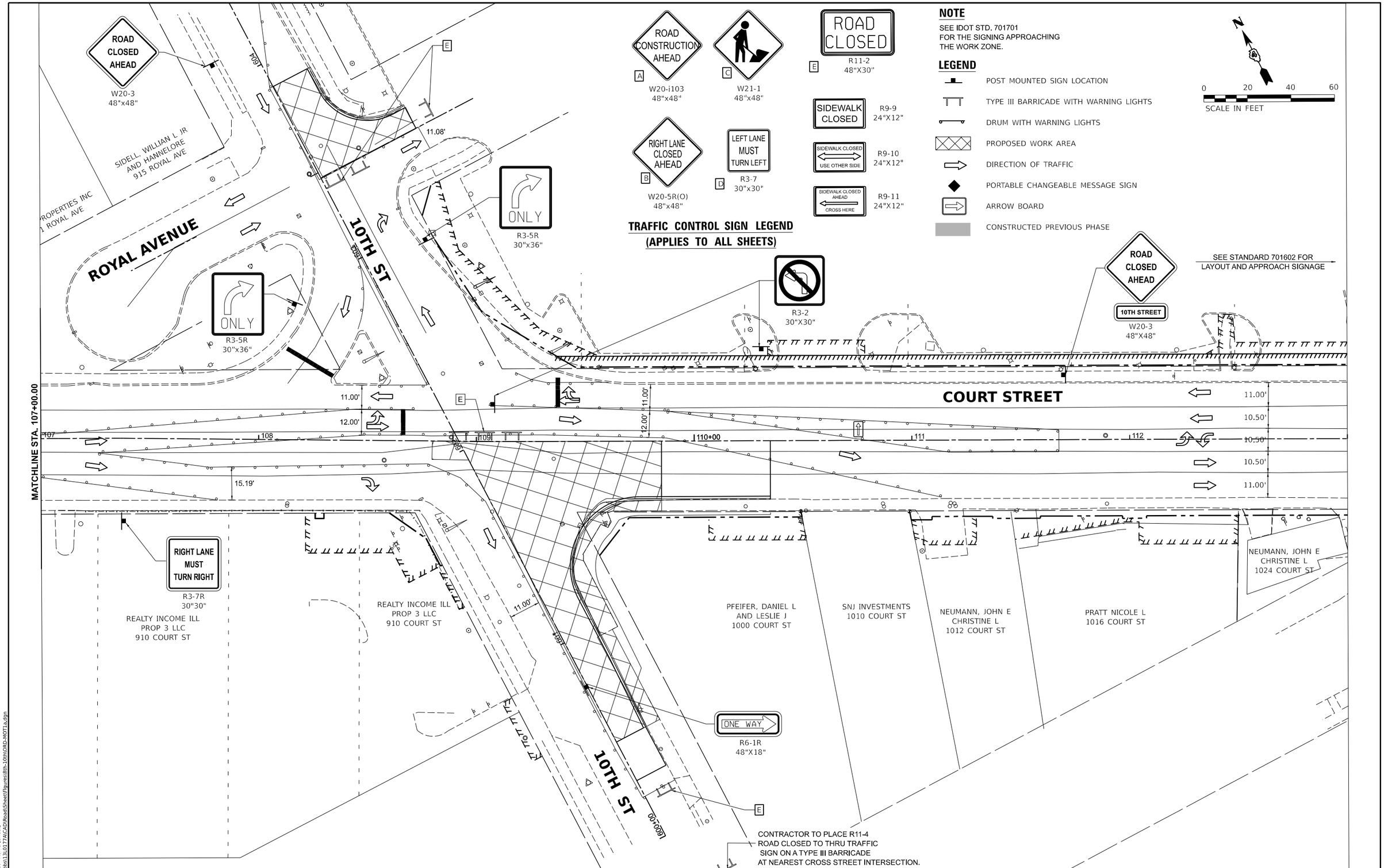

ROAD CONSTRUCTION AHEAD — W20-i103 48"x48" (A)

W21-1 48"x48" (C)

ROAD CLOSED — R11-2 48"X30" (E)

RIGHT LANE CLOSED AHEAD — W20-5R(O) 48"x48" (B)

LEFT LANE MUST TURN LEFT — R3-7 30"x30" (D)

SIDEWALK CLOSED — R9-9 24"X12"

SIDEWALK CLOSED / USE OTHER SIDE — R9-10 24"X12"

SIDEWALK CLOSED AHEAD / CROSS HERE — R9-11 24"X12"

TRAFFIC CONTROL SIGN LEGEND
(APPLIES TO ALL SHEETS)

NOTE

SEE IDOT STD. 701701
FOR THE SIGNING APPROACHING
THE WORK ZONE.

LEGEND

- POST MOUNTED SIGN LOCATION
- TYPE III BARRICADE WITH WARNING LIGHTS
- DRUM WITH WARNING LIGHTS
- PROPOSED WORK AREA
- DIRECTION OF TRAFFIC
- PORTABLE CHANGEABLE MESSAGE SIGN
- ARROW BOARD
- CONSTRUCTED PREVIOUS PHASE

N

0 20 40 60
SCALE IN FEET

© Copyright Hanson Professional Services Inc. 2025

HANSON
Hanson Professional Services Inc.

DESIGNED	JFC	7/26/2023 12:00:00 AM
DRAWN	RLA	7/26/2023 12:00:00 AM
REVIEWED	MGD	10/25/2024 12:00:00 AM

MODEL: AL_CourtSt - Plan 3 [Sheet]
FILE NAME: K:\13Jobs\13L0177A\CAD\RoadSheet\figures\8th-10th\ORD-MOT1a.dgn

Final

USER NAME = ander00846	DESIGNED - SD/JC	REVISED -	
	DRAWN - RA/CL	REVISED -	
PLOT SCALE = 0.16666667 ' / in.	CHECKED - MGD	REVISED -	
PLOT DATE = 3/26/2025	DATE - 10/25/2024 12:00:00 AM	REVISED -	

STATE OF ILLINOIS
DEPARTMENT OF TRANSPORTATION

COURT STREET
CONSTRUCTION STAGING 1A

SCALE: 1" = 20' | SHEET OF SHEETS | STA. TO STA.

F.A.P. RTE.	SECTION	COUNTY	TOTAL SHEETS	SHEET NO.
693	20-00196-01-RS	TAZEWELL	136	25
	13L0177A	CONTRACT NO. 89859		
		ILLINOIS	FED. AID PROJECT	

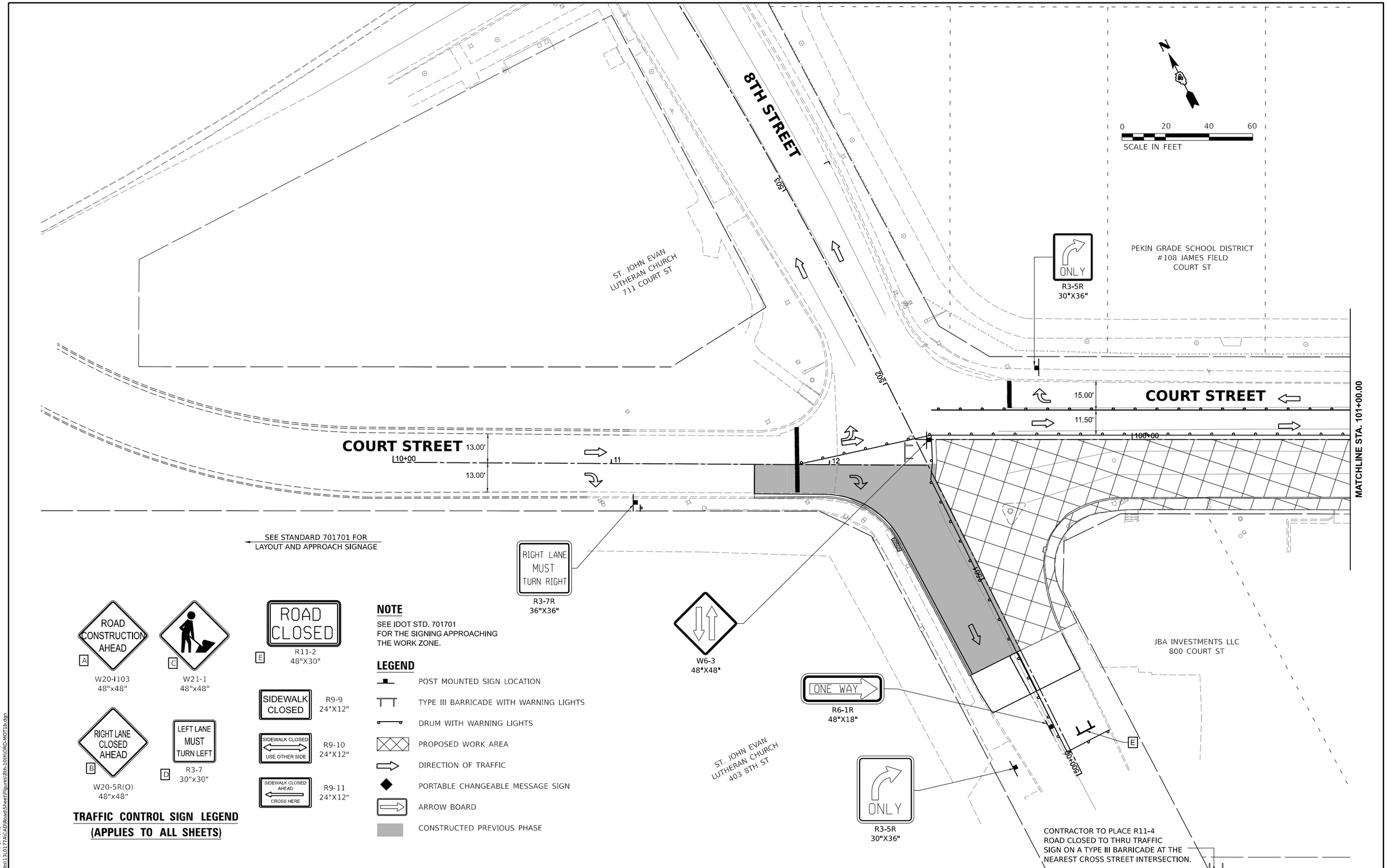

© Copyright Hanson Professional Services Inc. 2025

HANSON
Hanson Professional Services Inc.

DESIGNED	JFC	7/26/2023 12:00:00 AM
DRAWN	RLA	7/26/2023 12:00:00 AM
REVIEWED	MGD	10/25/2024 12:00:00 AM

MODEL: AL_CourtSt - Plan 1 [Sheet]
FILE NAME: I:\13Jobs\13L0177A\CAD\RoadSheet\figures\8th-10th\ORD-MOT1b.dgn

Final

USER NAME = ander00846	DESIGNED - SD/JC	REVISED -	
	DRAWN - RA/CL	REVISED -	
PLOT SCALE = 0.16666667 ' / in.	CHECKED - MGD	REVISED -	
PLOT DATE = 3/26/2025	DATE - 10/25/2024 12:00:00 AM	REVISED -	

STATE OF ILLINOIS
DEPARTMENT OF TRANSPORTATION

COURT STREET
CONSTRUCTION STAGING 1B

SCALE: 1" = 20' | SHEET OF SHEETS | STA. TO STA.

F.A.P. RTE.	SECTION	COUNTY	TOTAL SHEETS	SHEET NO.
693	20-00196-01-RS	TAZEWELL	136	26
	13L0177A	CONTRACT NO. 89859		
		ILLINOIS	FED. AID PROJECT	

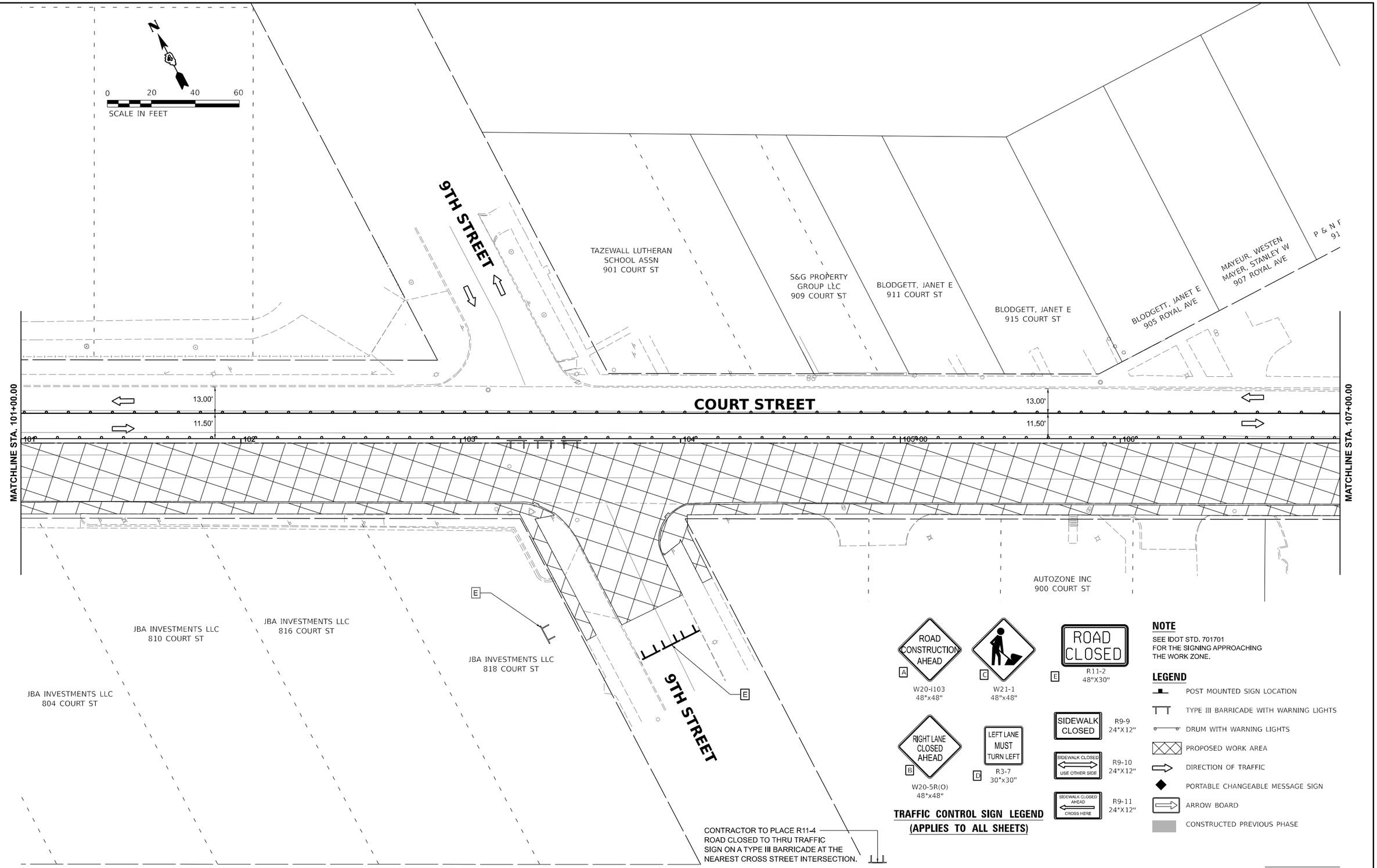

© Copyright Hanson Professional Services Inc. 2025

HANSON
Hanson Professional Services Inc.

DESIGNED	JFC	7/26/2023 12:00:00 AM
DRAWN	RLA	7/26/2023 12:00:00 AM
REVIEWED	MGD	10/25/2024 12:00:00 AM

MODEL: AL_CourtSt - Plan 2 [Sheet]
FILE NAME: k:\13jobs\13L0177A\CAD\RoadSheet\Figures\8th-10th\ORD-MOT1b.dgn

Final

USER NAME = ander00846	DESIGNED - SD/JC	REVISED -	
	DRAWN - RA/CL	REVISED -	
PLOT SCALE = 0.16666667 ' / in.	CHECKED - MGD	REVISED -	
PLOT DATE = 3/26/2025	DATE - 10/25/2024 12:00:00 AM	REVISED -	

STATE OF ILLINOIS
DEPARTMENT OF TRANSPORTATION

COURT STREET
CONSTRUCTION STAGING 1B

SCALE: 1" = 20' | SHEET OF SHEETS | STA. TO STA.

F.A.P. RTE.	SECTION	COUNTY	TOTAL SHEETS	SHEET NO.
693	20-00196-01-RS	TAZEWELL	136	27
	13L0177A	CONTRACT NO. 89859		
		ILLINOIS	FED. AID PROJECT	

CONTRACTOR TO PLACE R11-4 ROAD CLOSED TO THRU TRAFFIC SIGN ON A TYPE III BARRICADE AT NEAREST CROSS STREET INTERSECTION.

ONE WAY
R6-1R
48"X18"

ONLY
R3-5R
30"X36"

SIDELL, WILLIAN L JR AND HANNELORE
915 ROYAL AVE

PROPERTIES INC
1 ROYAL AVE

W6-4
12"X18"

ROYAL AVENUE

10TH STREET

ONLY
R3-5R
30"X36"

W6-3
48"X48"

MCDONALDS USE LLC
1013 COURT ST

R3-2
24"X24"

SEE STANDARD 701602 FOR
LAYOUT AND APPROACH SIGNAGE

COURT STREET

MATCHLINE STA. 107+00.00

13.00'
11.50'
30.00'
12.50'
11.50'
12.50'
10.50'
10.50'
10.00'
10.00'
10.50'
10.50'
11.00'

107
108
109
110+00
111
112

R3-1
24"X24"

REALTY INCOME ILL
PROP 3 LLC
910 COURT ST

REALTY INCOME ILL
PROP 3 LLC
910 COURT ST

PFEIFER, DANIEL L
AND LESLIE J
1000 COURT ST

SNJ INVESTMENTS
1010 COURT ST

NEUMANN, JOHN E
CHRISTINE L
1012 COURT ST

PRATT NICOLE L
1016 COURT ST

NEUMANN, JOHN E
CHRISTINE L
1024 COURT ST

10TH STREET

ROAD CONSTRUCTION AHEAD
A
W20-i103
48"x48"

C
W21-1
48"x48"

ROAD CLOSED
E
R11-2
48"X30"

SIDEWALK CLOSED
R9-9
24"X12"

RIGHT LANE CLOSED AHEAD
B
W20-5R(O)
48"x48"

LEFT LANE MUST TURN LEFT
D
R3-7
30"x30"

SIDEWALK CLOSED
USE OTHER SIDE
R9-10
24"X12"

SIDEWALK CLOSED AHEAD
CROSS HERE
R9-11
24"X12"

TRAFFIC CONTROL SIGN LEGEND
(APPLIES TO ALL SHEETS)

NOTE

SEE IDOT STD. 701701
FOR THE SIGNING APPROACHING
THE WORK ZONE.

LEGEND

- POST MOUNTED SIGN LOCATION
- TYPE III BARRICADE WITH WARNING LIGHTS
- DRUM WITH WARNING LIGHTS
- PROPOSED WORK AREA
- DIRECTION OF TRAFFIC
- PORTABLE CHANGEABLE MESSAGE SIGN
- ARROW BOARD
- CONSTRUCTED PREVIOUS PHASE

N

0 20 40 60
SCALE IN FEET

© Copyright Hanson Professional Services Inc. 2025

HANSON
Hanson Professional Services Inc.

DESIGNED	JFC	7/26/2023 12:00:00 AM
DRAWN	RLA	7/26/2023 12:00:00 AM
REVIEWED	MGD	10/25/2024 12:00:00 AM

MODEL: AL_CourtSt - Plan 3 [Sheet]
FILE NAME: I:\13jobs\13L0177A\CAD\Road\Sheet\Figures\8th-10th\ORD-MOT1b.dgn

Final

USER NAME = ander00846	DESIGNED - SD/JC	REVISED -	
	DRAWN - RA/CL	REVISED -	
PLOT SCALE = 0.16666667 ' / in.	CHECKED - MGD	REVISED -	
PLOT DATE = 3/26/2025	DATE - 10/25/2024 12:00:00 AM	REVISED -	

STATE OF ILLINOIS
DEPARTMENT OF TRANSPORTATION

COURT STREET
CONSTRUCTION STAGING 1B

SCALE: 1" = 20' | SHEET OF SHEETS | STA. TO STA.

F.A.P. RTE.	SECTION	COUNTY	TOTAL SHEETS	SHEET NO.
693	20-00196-01-RS	TAZEWELL	136	28
	13L0177A	CONTRACT NO. 89859		
		ILLINOIS	FED. AID PROJECT	

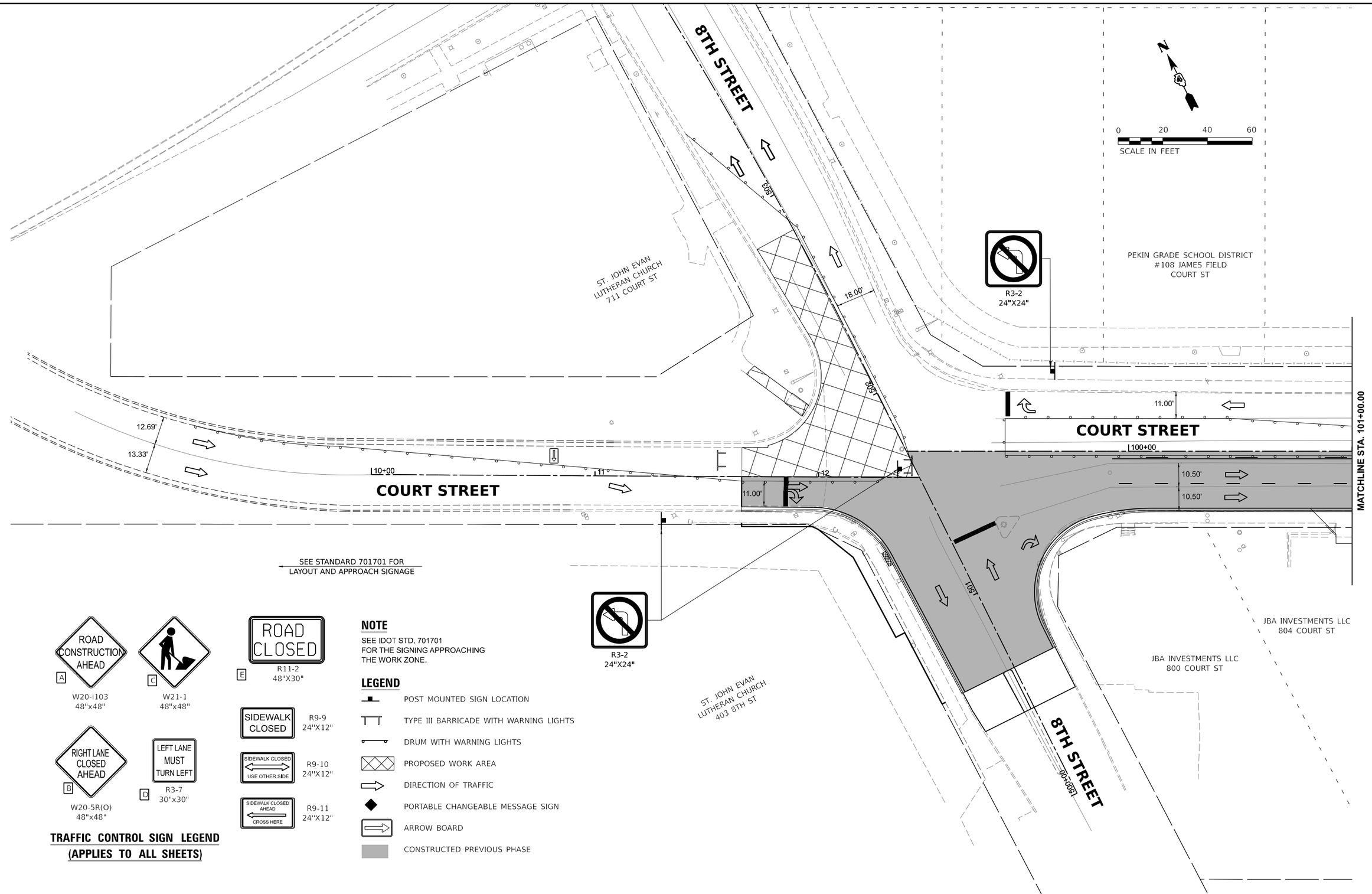

ROAD CONSTRUCTION AHEAD
A
W20-i103
48"x48"

C
W21-1
48"x48"

ROAD CLOSED
E
R11-2
48"X30"

RIGHT LANE CLOSED AHEAD
B
W20-5R(O)
48"x48"

LEFT LANE MUST TURN LEFT
D
R3-7
30"x30"

SIDEWALK CLOSED
R9-9
24"X12"

SIDEWALK CLOSED
USE OTHER SIDE
R9-10
24"X12"

SIDEWALK CLOSED AHEAD
CROSS HERE
R9-11
24"X12"

TRAFFIC CONTROL SIGN LEGEND
(APPLIES TO ALL SHEETS)

NOTE

SEE IDOT STD. 701701
FOR THE SIGNING APPROACHING
THE WORK ZONE.

LEGEND

- POST MOUNTED SIGN LOCATION
- TYPE III BARRICADE WITH WARNING LIGHTS
- DRUM WITH WARNING LIGHTS
- PROPOSED WORK AREA
- DIRECTION OF TRAFFIC
- PORTABLE CHANGEABLE MESSAGE SIGN
- ARROW BOARD
- CONSTRUCTED PREVIOUS PHASE

© Copyright Hanson Professional Services Inc. 2025

HANSON
Hanson Professional Services Inc.

DESIGNED	JFC	7/26/2023 12:00:00 AM
DRAWN	RLA	7/26/2023 12:00:00 AM
REVIEWED	MGD	10/25/2024 12:00:00 AM

MODEL: AL_CourtSt - Plan 1 [Sheet]
FILE NAME: k:\Jobs\13L0177A\CAD\Road\Sheet\Figures\8th-10th\ORD-MOT2a.dgn

Final

USER NAME = ander00846	DESIGNED - SD/JC	REVISED -	
	DRAWN - RA/CL	REVISED -	
PLOT SCALE = 0.16666667 ' / in.	CHECKED - MGD	REVISED -	
PLOT DATE = 3/26/2025	DATE - 10/25/2024 12:00:00 AM	REVISED -	

STATE OF ILLINOIS
DEPARTMENT OF TRANSPORTATION

COURT STREET
CONSTRUCTION STAGING 2A

SCALE: 1" = 20' | SHEET OF SHEETS | STA. TO STA.

F.A.P. RTE.	SECTION	COUNTY	TOTAL SHEETS	SHEET NO.
693	20-00196-01-RS	TAZEWELL	136	29
	13L0177A	CONTRACT NO. 89859		
		ILLINOIS	FED. AID PROJECT	

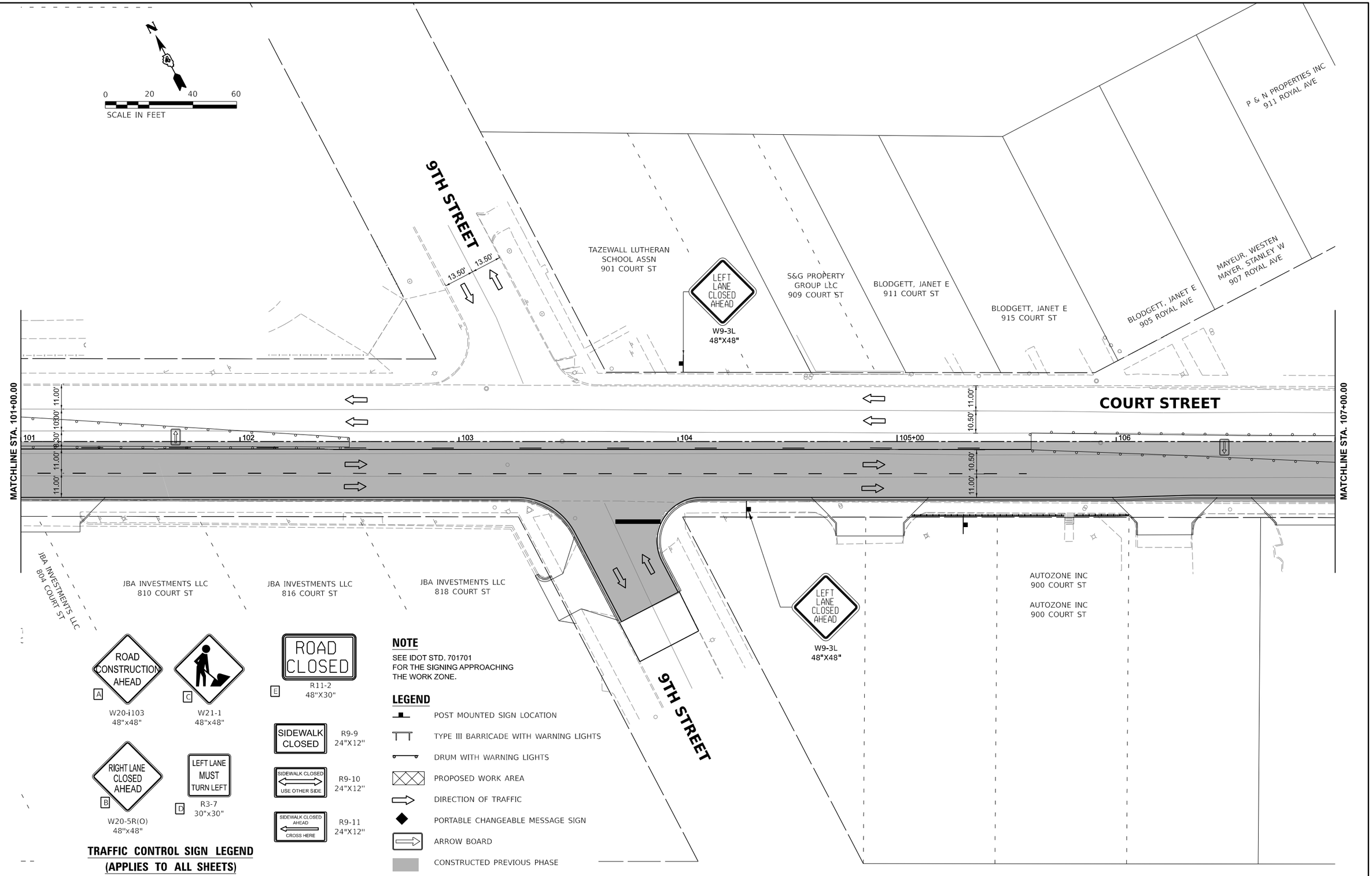

© Copyright Hanson Professional Services Inc. 2025

HANSON
Hanson Professional Services Inc.

DESIGNED	JFC	7/26/2023 12:00:00 AM
DRAWN	RLA	7/26/2023 12:00:00 AM
REVIEWED	MGD	10/25/2024 12:00:00 AM

MODEL: AL_CourtSt - Plan 2 [Sheet]
FILE NAME: I:\13jobs\13L0177A\CAD\Road\Sheet\figures\8th-10th\ORD-MOT2a.dgn

Final

USER NAME = ander00846	DESIGNED - SD/JC	REVISED -	
	DRAWN - RA/CL	REVISED -	
PLOT SCALE = 0.16666667 ' / in.	CHECKED - MGD	REVISED -	
PLOT DATE = 3/26/2025	DATE - 10/25/2024 12:00:00 AM	REVISED -	

STATE OF ILLINOIS
DEPARTMENT OF TRANSPORTATION

COURT STREET
CONSTRUCTION STAGING 2A

SCALE: 1" = 20' | SHEET OF SHEETS | STA. TO STA.

F.A.P. RTE.	SECTION	COUNTY	TOTAL SHEETS	SHEET NO.
693	20-00196-01-RS	TAZEWELL	136	30
	13L0177A	CONTRACT NO. 89859		
		ILLINOIS	FED. AID PROJECT	

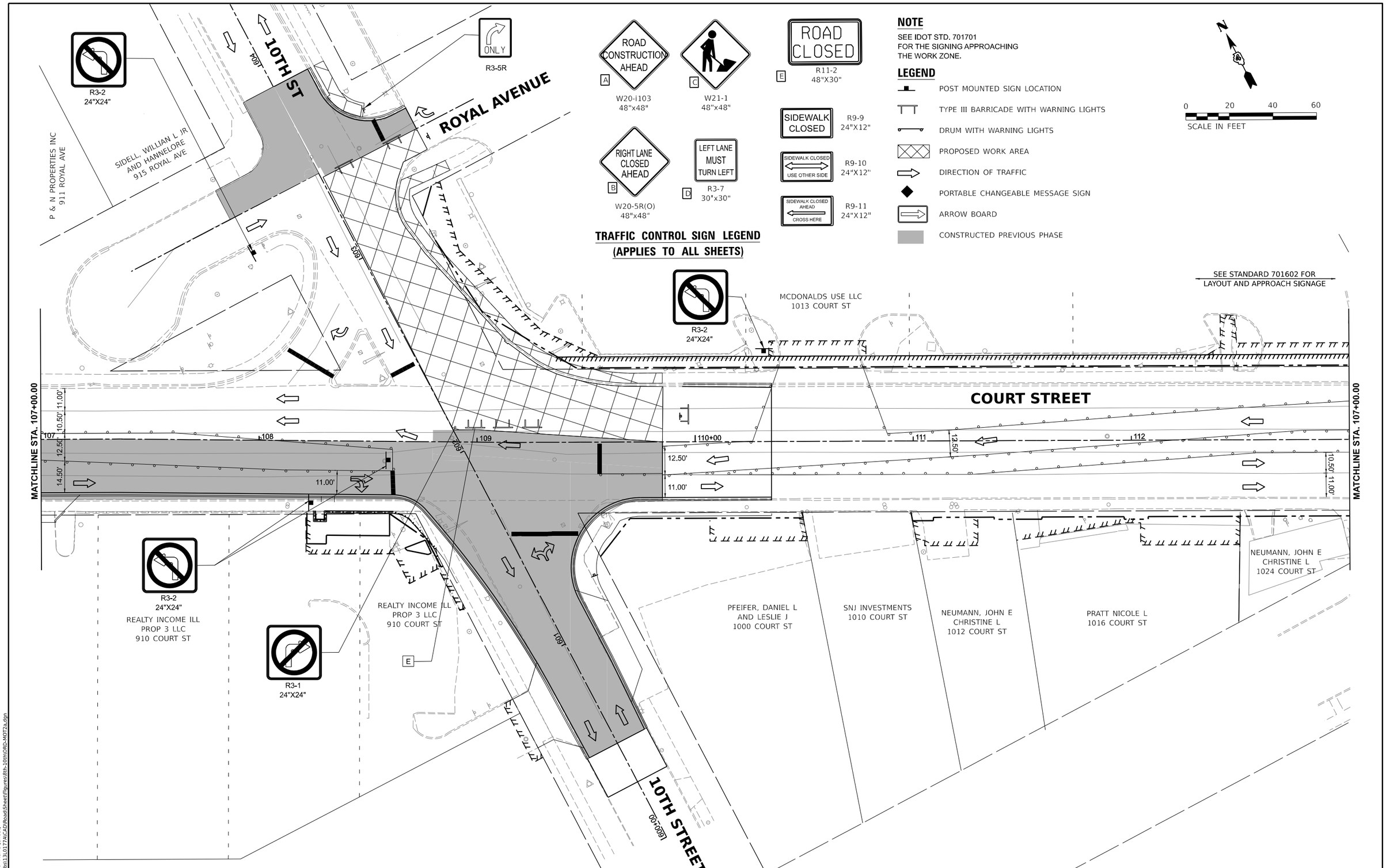

© Copyright Hanson Professional Services Inc. 2025

HANSON
Hanson Professional Services Inc.

DESIGNED	JFC	7/26/2023 12:00:00 AM
DRAWN	RLA	7/26/2023 12:00:00 AM
REVIEWED	MGD	10/25/2024 12:00:00 AM

MODEL: AL_CourtSt - Plan 3 (Sheet)
FILE NAME: k:\13jobs\13L0177A\CAD\Road\Sheet\Figures\8th-10th\ORD-MOT2a.dgn

Final

USER NAME = ander00846	DESIGNED - SD/JC	REVISED -	
	DRAWN - RA/CL	REVISED -	
PLOT SCALE = 0.16666667 ' / in.	CHECKED - MGD	REVISED -	
PLOT DATE = 3/26/2025	DATE - 10/25/2024 12:00:00 AM	REVISED -	

STATE OF ILLINOIS
DEPARTMENT OF TRANSPORTATION

COURT STREET
CONSTRUCTION STAGING 2A

SCALE: 1" = 20' | SHEET OF SHEETS | STA. TO STA.

F.A.P. RTE.	SECTION	COUNTY	TOTAL SHEETS	SHEET NO.
693	20-00196-01-RS	TAZEWELL	136	31
	13L0177A	CONTRACT NO. 89859		
		ILLINOIS	FED. AID PROJECT	

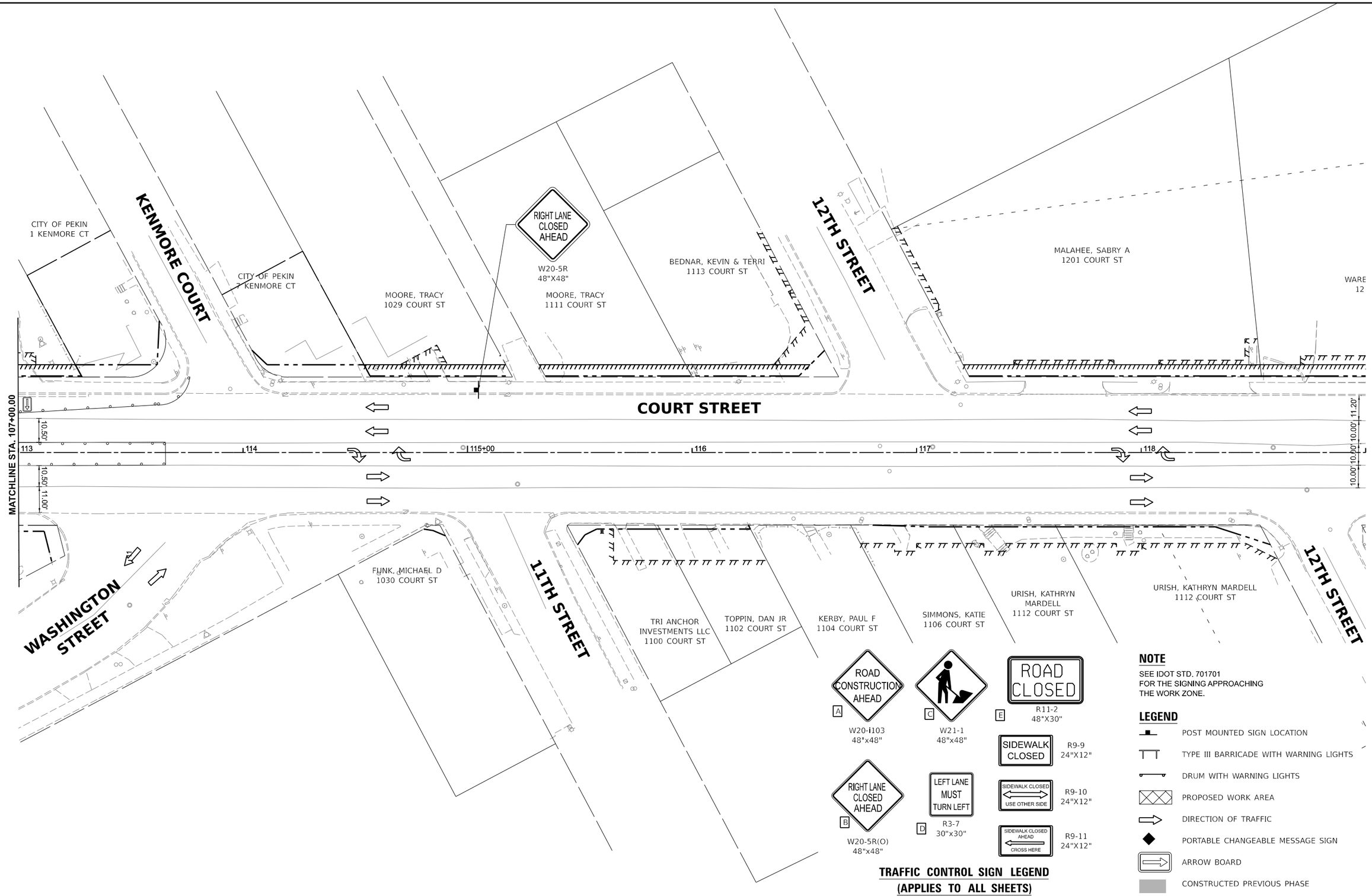

TRAFFIC CONTROL SIGN LEGEND
(APPLIES TO ALL SHEETS)

NOTE

SEE IDOT STD. 701701
FOR THE SIGNING APPROACHING
THE WORK ZONE.

LEGEND

- POST MOUNTED SIGN LOCATION
- TYPE III BARRICADE WITH WARNING LIGHTS
- DRUM WITH WARNING LIGHTS
- PROPOSED WORK AREA
- DIRECTION OF TRAFFIC
- PORTABLE CHANGEABLE MESSAGE SIGN
- ARROW BOARD
- CONSTRUCTED PREVIOUS PHASE

© Copyright Hanson Professional Services Inc. 2025

HANSON
Hanson Professional Services Inc.

DESIGNED	JFC	7/26/2023 12:00:00 AM
DRAWN	RLA	7/26/2023 12:00:00 AM
REVIEWED	MGD	10/25/2024 12:00:00 AM

MODEL: AL_CourtSt - Plan 4 [Sheet]
FILE NAME: I:\13Jobs\13L0177A\CAD\Road\Sheet\Figures\8th-10th\GRD-MOT2a.dgn

Final

USER NAME = ander00846	DESIGNED - SD/JC	REVISED -	
	DRAWN - RA/CL	REVISED -	
PLOT SCALE = 0.16666667 ' / in.	CHECKED - MGD	REVISED -	
PLOT DATE = 3/26/2025	DATE - 10/25/2024 12:00:00 AM	REVISED -	

STATE OF ILLINOIS
DEPARTMENT OF TRANSPORTATION

COURT STREET
CONSTRUCTION STAGING 2A

SCALE: 1" = 20' | SHEET OF SHEETS | STA. TO STA.

F.A.P. RTE.	SECTION	COUNTY	TOTAL SHEETS	SHEET NO.
693	20-00196-01-RS	TAZEWELL	136	32
	13L0177A	CONTRACT NO. 89859		
		ILLINOIS	FED. AID PROJECT	

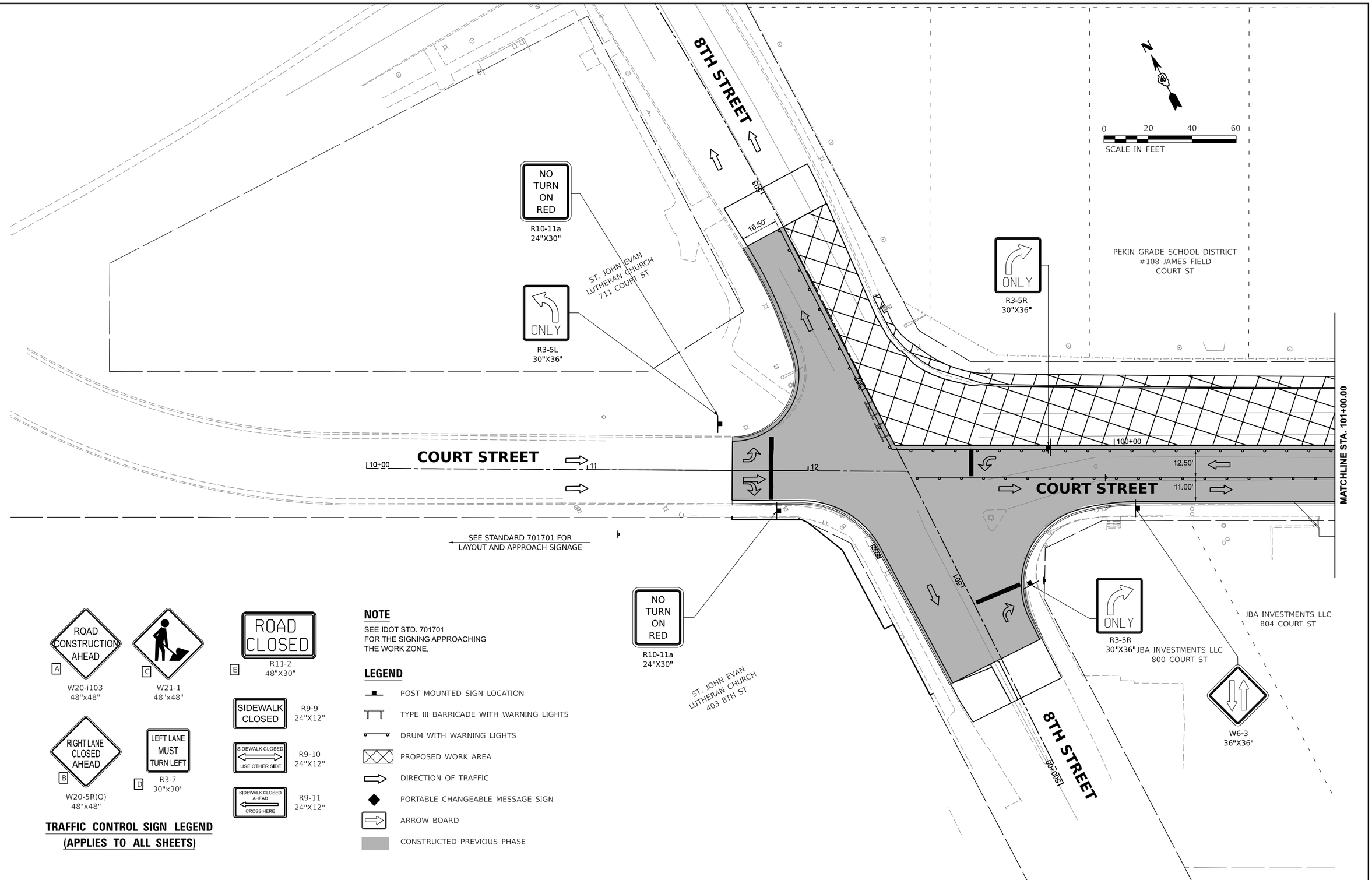

TRAFFIC CONTROL SIGN LEGEND
(APPLIES TO ALL SHEETS)

NOTE

SEE IDOT STD. 701701
FOR THE SIGNING APPROACHING
THE WORK ZONE.

LEGEND

- POST MOUNTED SIGN LOCATION
- TYPE III BARRICADE WITH WARNING LIGHTS
- DRUM WITH WARNING LIGHTS
- PROPOSED WORK AREA
- DIRECTION OF TRAFFIC
- PORTABLE CHANGEABLE MESSAGE SIGN
- ARROW BOARD
- CONSTRUCTED PREVIOUS PHASE

© Copyright Hanson Professional Services Inc. 2025

HANSON
Hanson Professional Services Inc.

DESIGNED	JFC	7/26/2023 12:00:00 AM
DRAWN	RLA	7/26/2023 12:00:00 AM
REVIEWED	MGD	10/25/2024 12:00:00 AM

MODEL: AL_CourtSt - Plan 1 [Sheet]
FILE NAME: k:\Jobs\13L0177A\CAD\Road\Sheet\Figures\8th-10th\ORD-MOT2b.dgn

Final

USER NAME = ander00846	DESIGNED - SD/JC	REVISED -	
	DRAWN - RA/CL	REVISED -	
PLOT SCALE = 0.16666667 ' / in.	CHECKED - MGD	REVISED -	
PLOT DATE = 3/26/2025	DATE - 10/25/2024 12:00:00 AM	REVISED -	

STATE OF ILLINOIS
DEPARTMENT OF TRANSPORTATION

COURT STREET
CONSTRUCTION STAGING 2B

SCALE: 1" = 20' | SHEET OF SHEETS | STA. TO STA.

F.A.P. RTE.	SECTION	COUNTY	TOTAL SHEETS	SHEET NO.
693	20-00196-01-RS	TAZEWELL	136	33
	13L0177A	CONTRACT NO. 89859		
		ILLINOIS	FED. AID PROJECT	

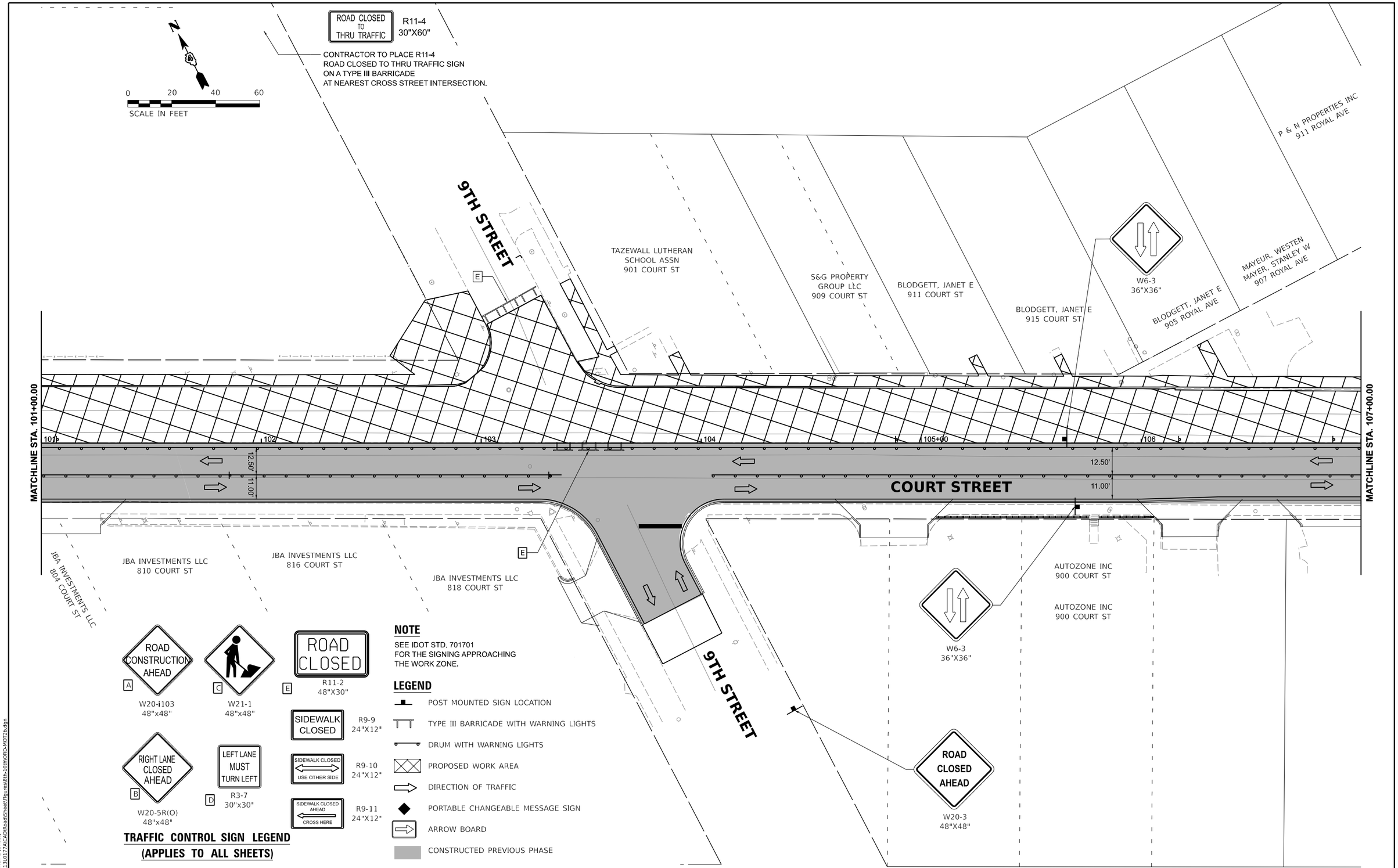

© Copyright Hanson Professional Services Inc. 2025

HANSON
Hanson Professional Services Inc.

DESIGNED	JFC	7/26/2023 12:00:00 AM
DRAWN	RLA	7/26/2023 12:00:00 AM
REVIEWED	MGD	10/25/2024 12:00:00 AM

MODEL: AL_CourtSt - Plan 2 [Sheet]
FILE NAME: k:\13jobs\13L0177A\CAD\Road\Sheet\figures\8th-10th\CRD-MOT2b.dgn

Final

USER NAME = ander00846	DESIGNED - SD/JC	REVISED -	
	DRAWN - RA/CL	REVISED -	
PLOT SCALE = 0.16666667 ' / in.	CHECKED - MGD	REVISED -	
PLOT DATE = 3/26/2025	DATE - 10/25/2024 12:00:00 AM	REVISED -	

STATE OF ILLINOIS
DEPARTMENT OF TRANSPORTATION

COURT STREET
CONSTRUCTION STAGING 2B

SCALE: 1" = 20' | SHEET OF SHEETS | STA. TO STA.

F.A.P. RTE.	SECTION	COUNTY	TOTAL SHEETS	SHEET NO.
693	20-00196-01-RS	TAZEWELL	136	34
	13L0177A	CONTRACT NO. 89859		
		ILLINOIS	FED. AID PROJECT	

CONTRACTOR TO PLACE R11-4 ROAD CLOSED TO THRU TRAFFIC SIGN ON A TYPE III BARRICADE AT NEAREST CROSS STREET INTERSECTION.

NOTES:

1. ADVANCE WARNING SIGNS TO BE PLACED AT THE NW CORNER OF KENMORE COURT INTERSECTION
2. ADVANCE WARNING SIGNS TO BE PLACED NEAR THE KENMORE COURT AND 12TH STREET INTERSECTIONS

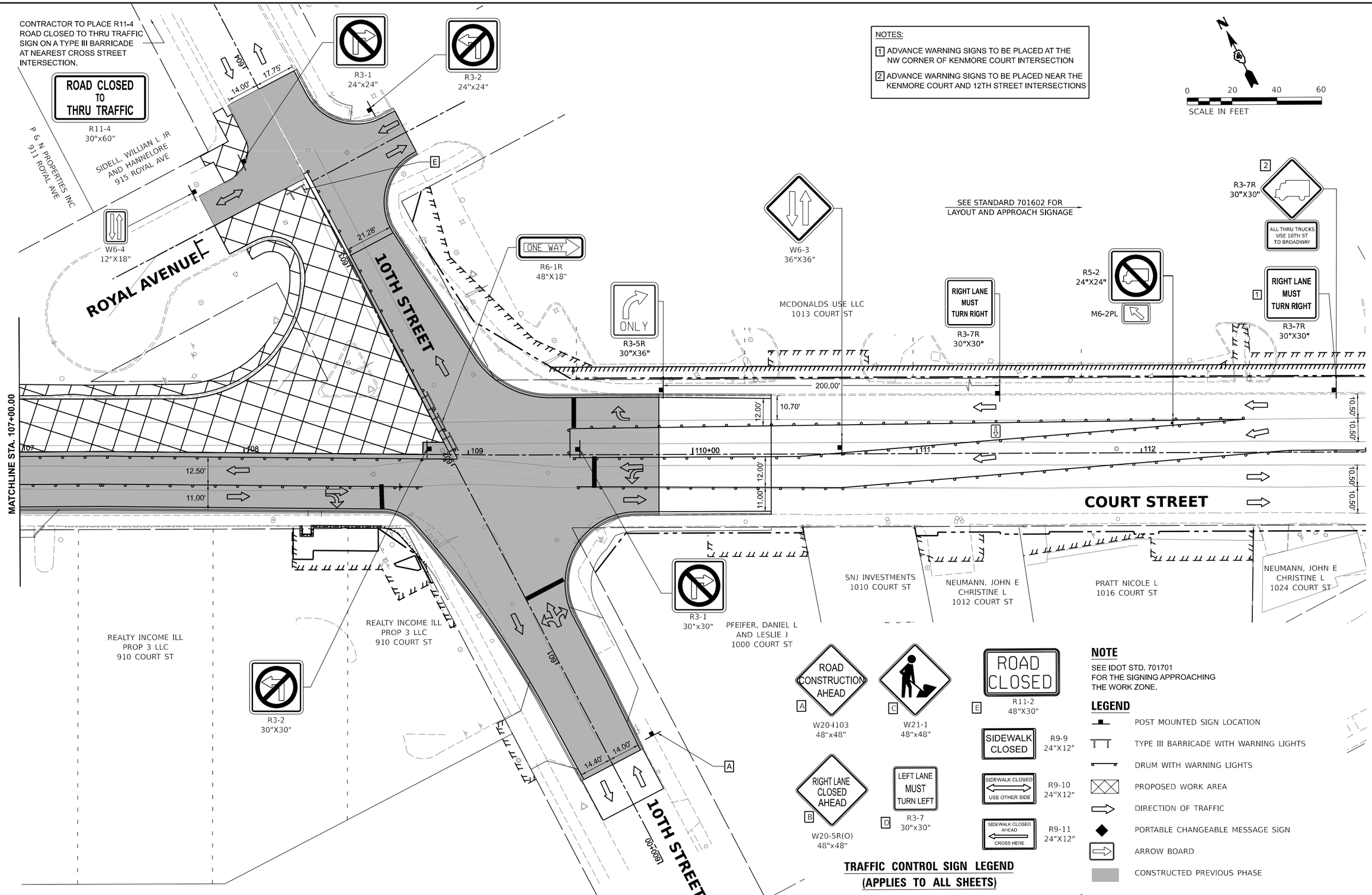

© Copyright Hanson Professional Services Inc. 2025

HANSON
Hanson Professional Services Inc.

DESIGNED	JFC	7/26/2023 12:00:00 AM
DRAWN	RLA	7/26/2023 12:00:00 AM
REVIEWED	MGD	10/25/2024 12:00:00 AM

MODEL: AL_CourtSt - Plan 3 [Sheet]
FILE NAME: k:\3jobs\13L0177A\CAD\Road\Sheet\Figures\8th-10th\GRD-MOT2b.dgn

Final

USER NAME = ander00846	DESIGNED - SD/JC	REVISED -	
	DRAWN - RA/CL	REVISED -	
PLOT SCALE = 0.16666667 ' / in.	CHECKED - MGD	REVISED -	
PLOT DATE = 3/26/2025	DATE - 10/25/2024 12:00:00 AM	REVISED -	

STATE OF ILLINOIS
DEPARTMENT OF TRANSPORTATION

COURT STREET
CONSTRUCTION STAGING 2B

SCALE: 1" = 20' | SHEET OF SHEETS | STA. TO STA.

F.A.P. RTE.	SECTION	COUNTY	TOTAL SHEETS	SHEET NO.
693	20-00196-01-RS	TAZEWELL	136	35
	13L0177A	CONTRACT NO. 89859		
		ILLINOIS	FED. AID PROJECT	

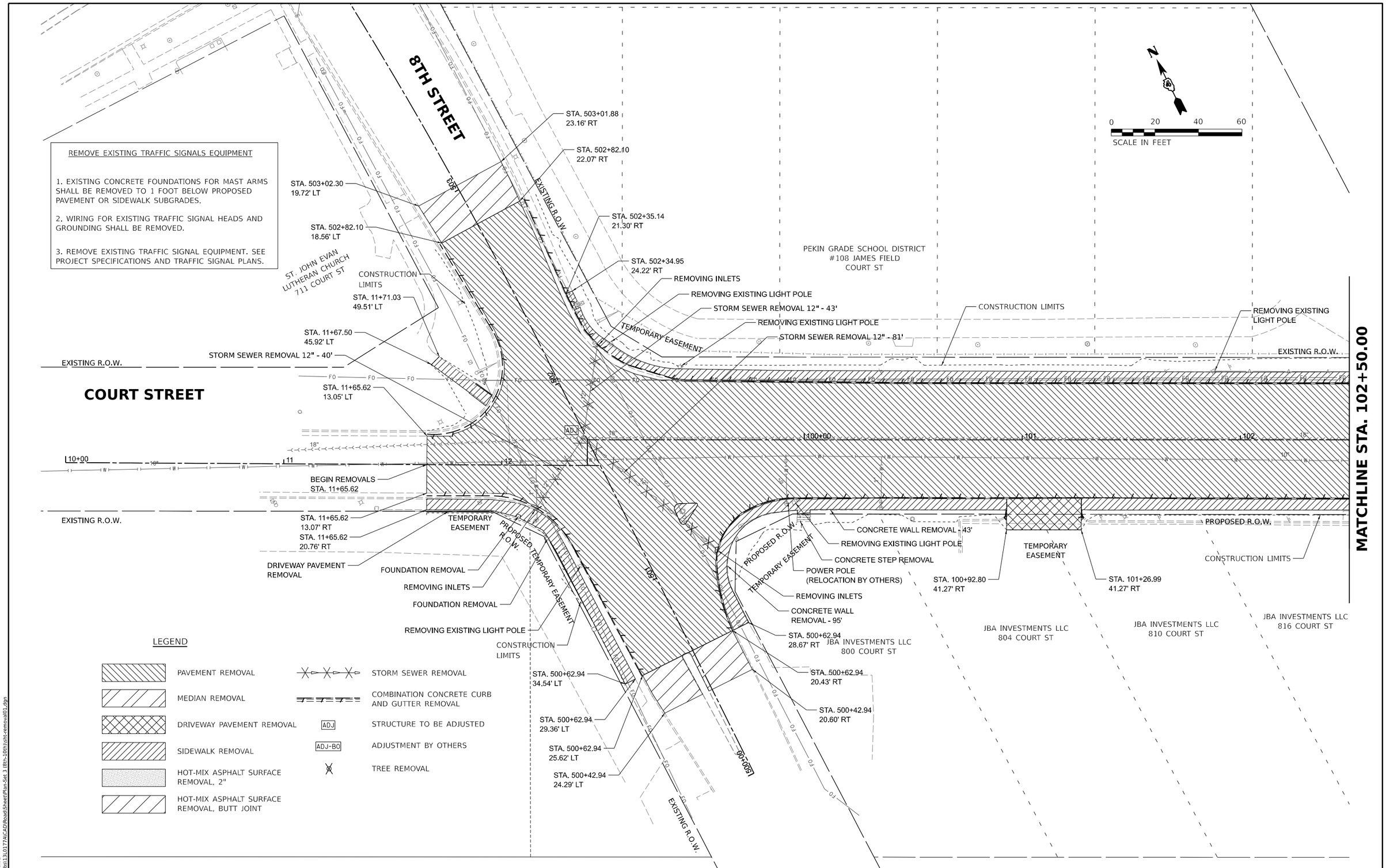

©Copyright Hanson Professional Services Inc. 2025

HANSON
Hanson Professional Services Inc.

DESIGNED	JFC	7/26/2023 12:00:00 AM
DRAWN	RLA	7/26/2023 12:00:00 AM
REVIEWED	MGD	10/25/2024 12:00:00 AM

MODEL: sht-removal01
FILE NAME: I:\13jobs\13L0177A\CAD\Road\Sheet\Plan-Set 3 (8th-10th)\sht-removal01.dgn

Final

USER NAME = ander00846	DESIGNED - SD/JC	REVISED -	
	DRAWN - RA/CL	REVISED -	
PLOT SCALE = 0.16666667 ' / in.	CHECKED - MGD	REVISED -	
PLOT DATE = 3/26/2025	DATE - 10/25/2024 12:00:00 AM	REVISED -	

STATE OF ILLINOIS
DEPARTMENT OF TRANSPORTATION

COURT STREET
REMOVAL PLANS

SCALE: 1" = 20' | SHEET OF SHEETS | STA. TO STA.

F.A.P. RTE.	SECTION	COUNTY	TOTAL SHEETS	SHEET NO.
693	20-00196-01-RS	TAZEWELL	136	36
	13L0177A	CONTRACT NO. 89859		
		ILLINOIS	FED. AID PROJECT	

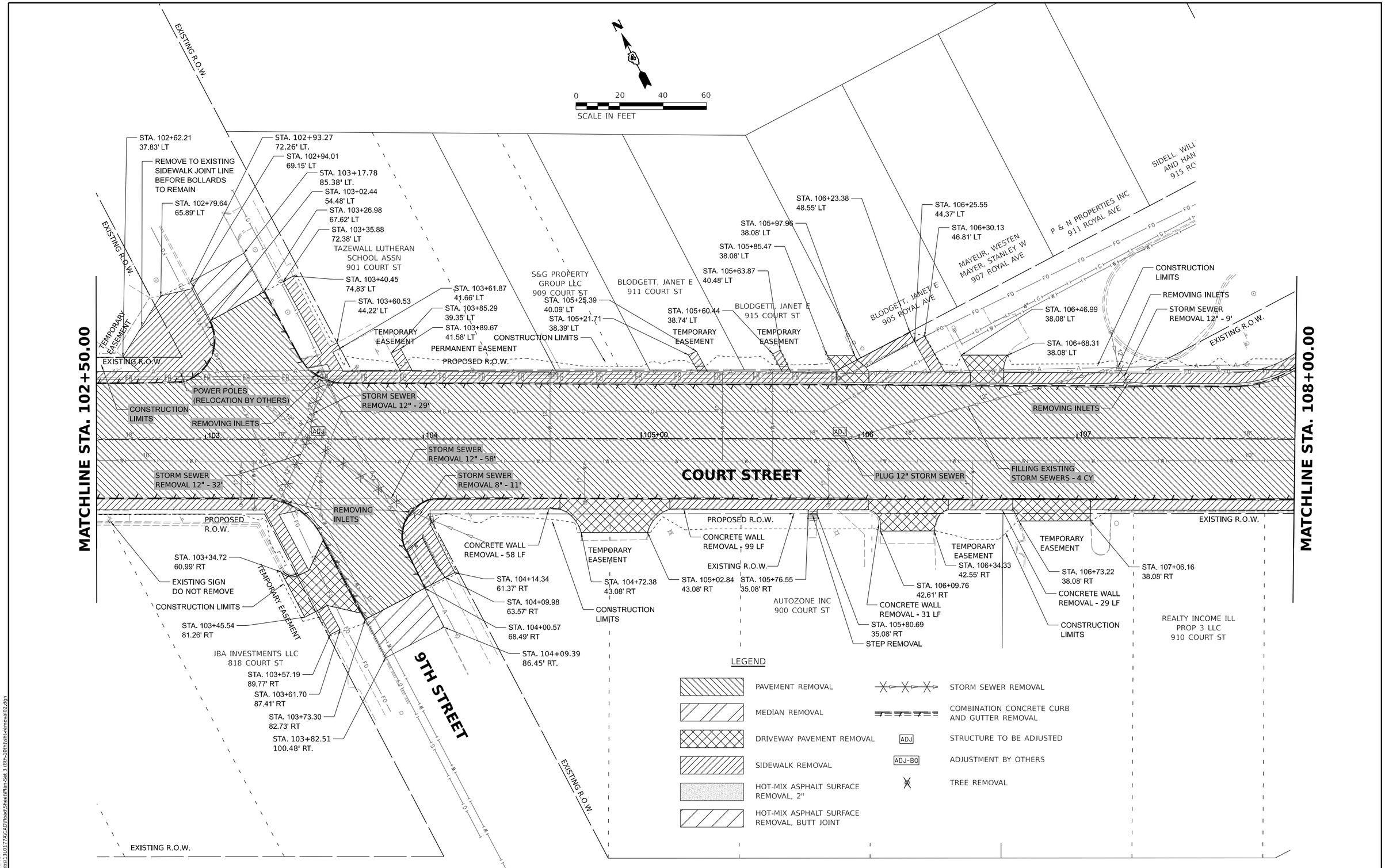

© Copyright Hanson Professional Services Inc. 2025

HANSON
Hanson Professional Services Inc.

DESIGNED	JFC	7/26/2023 12:00:00 AM
DRAWN	RLA	7/26/2023 12:00:00 AM
REVIEWED	MGD	10/25/2024 12:00:00 AM

MODEL: slit-removal02
FILE NAME: k:\13jobs\13L0177A\CAD\Road\Sheet\Plan-Set 3 (8th-10th)\slt-removal02.dgn

Final

USER NAME = ander00846	DESIGNED - SD/JC	REVISED -	
	DRAWN - RA/CL	REVISED -	
PLOT SCALE = 0.16666667 ' / in.	CHECKED - MGD	REVISED -	
PLOT DATE = 3/26/2025	DATE - 10/25/2024 12:00:00 AM	REVISED -	

STATE OF ILLINOIS
DEPARTMENT OF TRANSPORTATION

COURT STREET
REMOVAL PLANS

SCALE: 1" = 20' | SHEET OF SHEETS | STA. TO STA.

F.A.P. RTE.	SECTION	COUNTY	TOTAL SHEETS	SHEET NO.
693	20-00196-01-RS	TAZEWELL	136	37
	13L0177A	CONTRACT NO. 89859		
	ILLINOIS	FED. AID PROJECT		

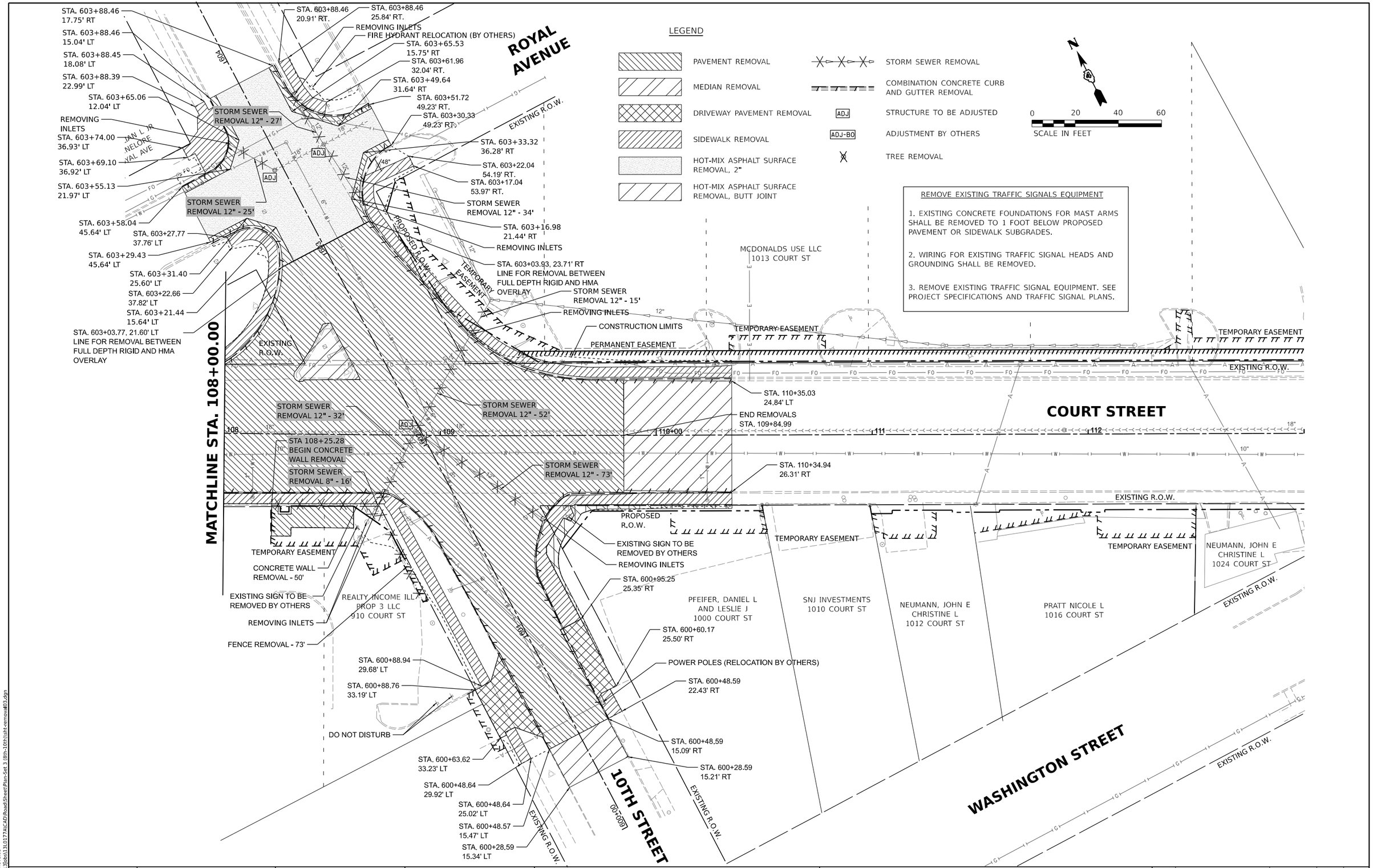

© Copyright Hanson Professional Services Inc. 2025

HANSON
Hanson Professional Services Inc.

DESIGNED	JFC	7/26/2023 12:00:00 AM
DRAWN	RLA	7/26/2023 12:00:00 AM
REVIEWED	MGD	10/25/2024 12:00:00 AM

MODEL: sht-removal03
FILE NAME: I:\13jobs\13L0177A\CAD\Road\Sheet\Plan-Set 3 (8th-10th)\sht-removal03.dgn

Final

USER NAME = ander00846	DESIGNED - SD/JC	REVISED -	
	DRAWN - RA/CL	REVISED -	
PLOT SCALE = 0.16666667 ' / in.	CHECKED - MGD	REVISED -	
PLOT DATE = 3/26/2025	DATE - 10/25/2024 12:00:00 AM	REVISED -	

STATE OF ILLINOIS
DEPARTMENT OF TRANSPORTATION

COURT STREET
REMOVAL PLANS

SCALE: 1" = 20' | SHEET OF SHEETS | STA. TO STA.

F.A.P. RTE.	SECTION	COUNTY	TOTAL SHEETS	SHEET NO.
693	20-00196-01-RS	TAZEWELL	136	38
	13L0177A	CONTRACT NO. 89859		
		ILLINOIS	FED. AID PROJECT	

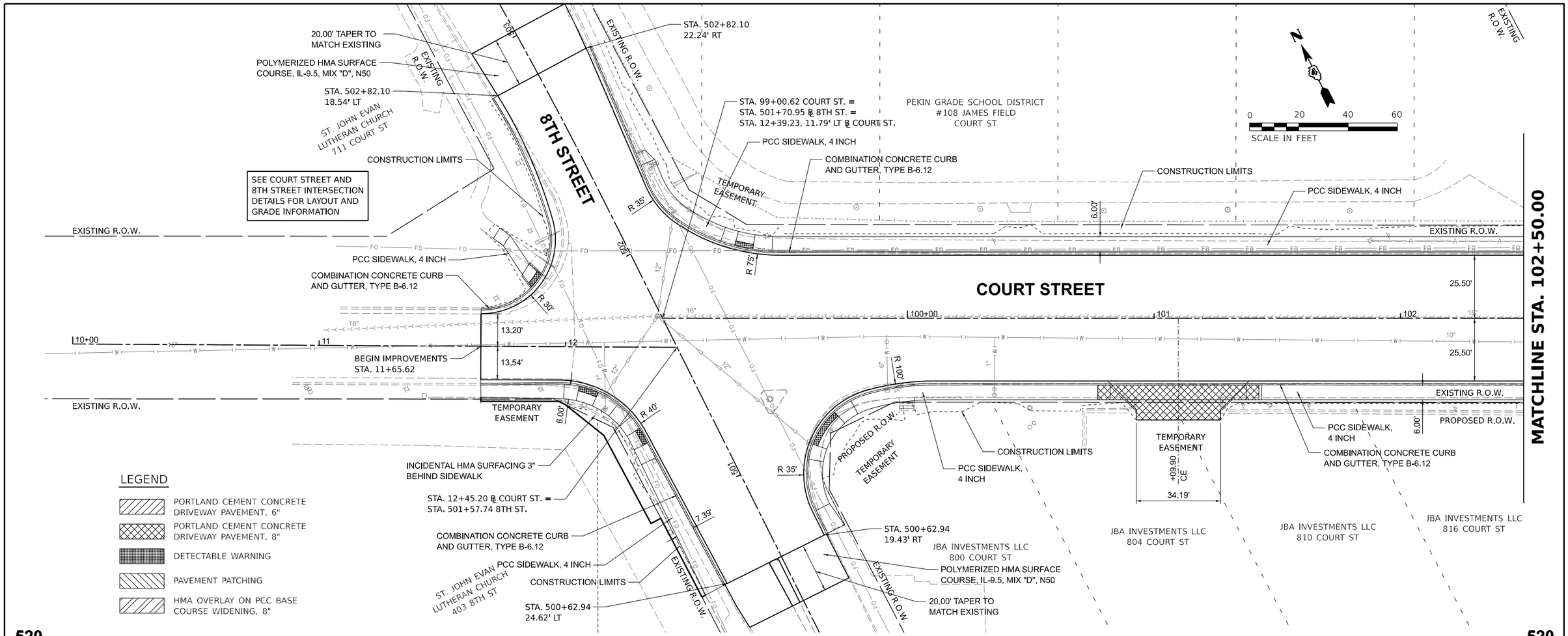

LEGEND

- PORTLAND CEMENT CONCRETE DRIVEWAY PAVEMENT, 6"
- PORTLAND CEMENT CONCRETE DRIVEWAY PAVEMENT, 8"
- DETECTABLE WARNING
- PAVEMENT PATCHING
- HMA OVERLAY ON PCC BASE COURSE WIDENING, 8"

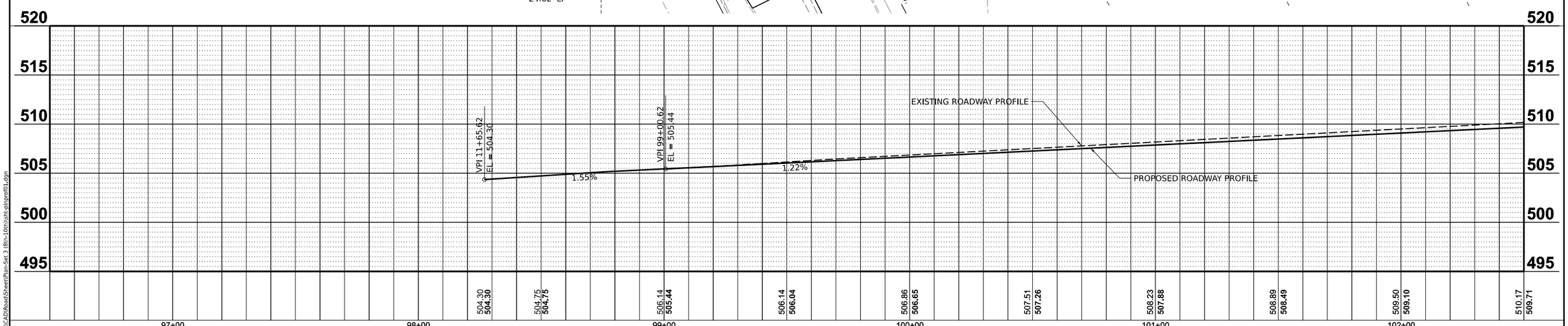

PLAN	BY	DATE
SURVEYED		
PLOTTED		
ALIGNMENT CHECKED		
RT. OF WAY CHECKED		
CADD FILE NAME		
NOTE BOOK NO.		

PROFILE	BY	DATE
SURVEYED		
PLOTTED		
GRADES CHECKED		
B.M. NOTED		
STRUCTURE NOTAT'NS CH'KD		
NOTE BOOK NO.		

© Copyright Hanson Professional Services Inc. 2025

HANSON
Hanson Professional Services Inc.

DESIGNED	JFC	7/26/2023 12:00:00 AM
DRAWN	RLA	7/26/2023 12:00:00 AM
REVIEWED	MGD	10/25/2024 12:00:00 AM

MODEL: sth-plprof01
FILE NAME: I:\13jobs\13L0177A\CAD\Road\Sheet\Plan-Set_3 (8th-10th)\sht-plprof01.dgn

Final

USER NAME = ander00846	DESIGNED - SD/JC	REVISED -	
	DRAWN - RA/CL	REVISED -	
PLOT SCALE = 0.16666667 ' / in.	CHECKED - MGD	REVISED -	
PLOT DATE = 3/26/2025	DATE - 10/25/2024 12:00:00 AM	REVISED -	

STATE OF ILLINOIS
DEPARTMENT OF TRANSPORTATION

COURT STREET
PLAN AND PROFILES

SCALE: 1" = 20' | SHEET OF SHEETS | STA. TO STA.

F.A.P. RTE.	SECTION	COUNTY	TOTAL SHEETS	SHEET NO.
693	20-00196-01-RS	TAZEWELL	136	39
	13L0177A	CONTRACT NO. 89859		
	ILLINOIS	FED. AID PROJECT		

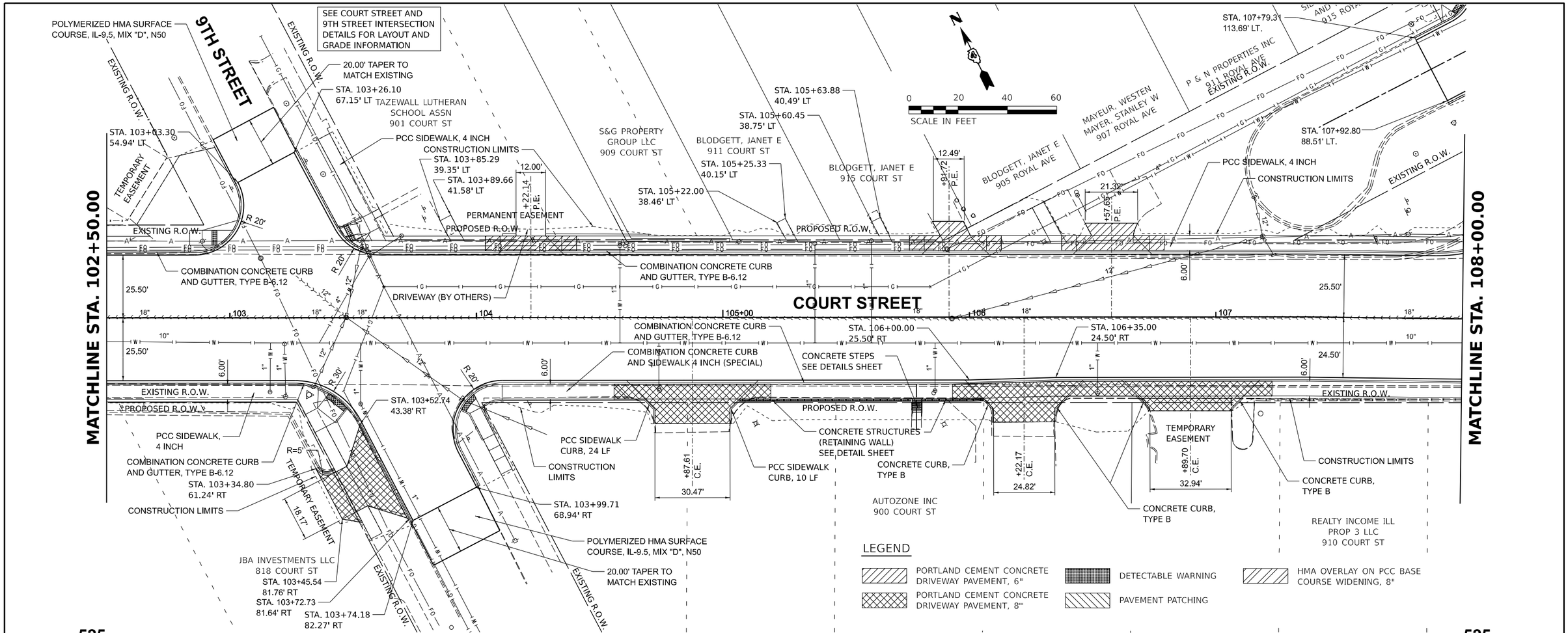

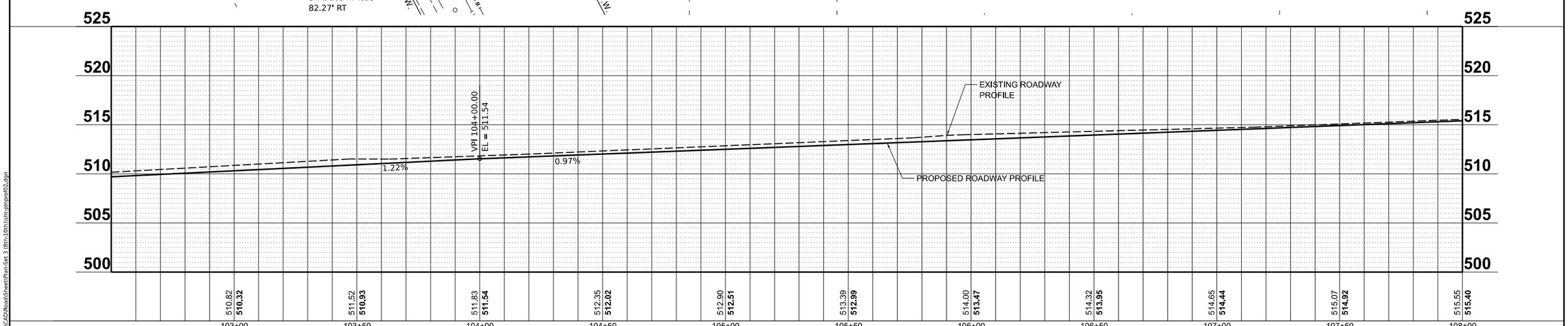

PLAN	BY	DATE
SURVEYED		
PLOTTED		
ALIGNMENT CHECKED		
RT. OF WAY CHECKED		
CADD FILE NAME		
NOTE BOOK NO.		

PROFILE	BY	DATE
SURVEYED		
PLOTTED		
GRADES CHECKED		
B.M. NOTED		
STRUCTURE NOTAT'NS CH'KD		
NOTE BOOK NO.		

© Copyright Hanson Professional Services Inc. 2025

HANSON
Hanson Professional Services Inc.

DESIGNED	JFC	7/26/2023 12:00:00 AM
DRAWN	RLA	7/26/2023 12:00:00 AM
REVIEWED	MGD	10/25/2024 12:00:00 AM

MODEL: plnprof02
FILE NAME: I:\13jobs\13L0177A\CAD\Road\Sheet\Plan-Set 3 (8th-10th)\sht-plnprof02.dgn

Final

USER NAME = ander00846	DESIGNED - SD/JC	REVISED -	
	DRAWN - RA/CL	REVISED -	
PLOT SCALE = 0.16666667 ' / in.	CHECKED - MGD	REVISED -	
PLOT DATE = 3/26/2025	DATE - 10/25/2024 12:00:00 AM	REVISED -	

STATE OF ILLINOIS
DEPARTMENT OF TRANSPORTATION

COURT STREET
PLAN AND PROFILES

SCALE: 1" = 20' | SHEET OF SHEETS | STA. TO STA.

F.A.P. RTE.	SECTION	COUNTY	TOTAL SHEETS	SHEET NO.
693	20-00196-01-RS	TAZEWELL	136	40
	13L0177A	CONTRACT NO. 89859		
		ILLINOIS	FED. AID PROJECT	

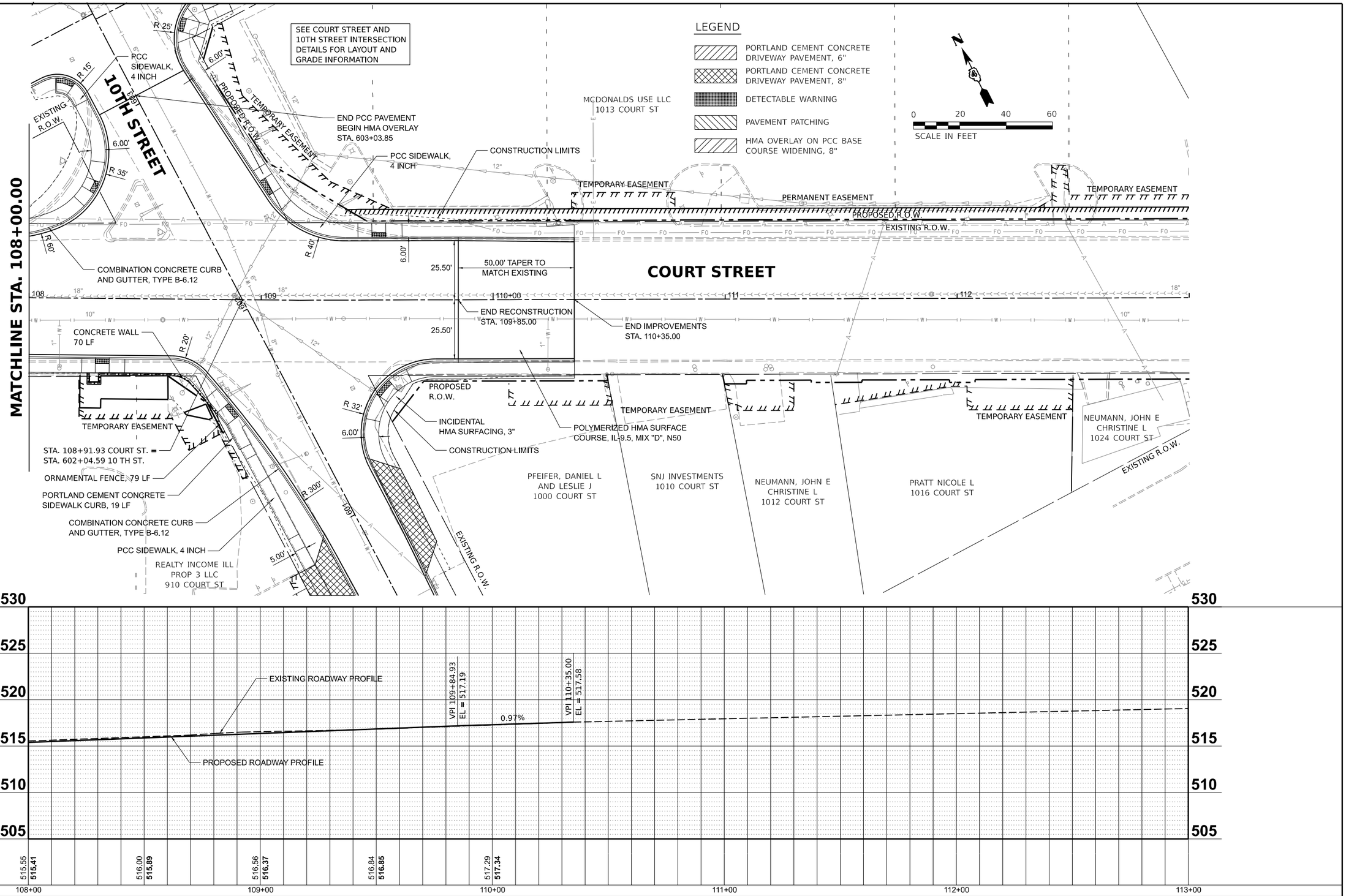

PLAN
SURVEYED
PLOTTED
ALIGNMENT CHECKED
RT. OF WAY CHECKED
CADD FILE NAME
NOTE BOOK NO.
BY
DATE

PROFILE
SURVEYED
PLOTTED
GRADES CHECKED
B.M. NOTED
STRUCTURE NOTAT'NS CH'KD
NOTE BOOK NO.
BY
DATE

© Copyright Hanson Professional Services Inc. 2025
HANSON
Hanson Professional Services Inc.

DESIGNED FC 7/26/2023 12:00:00 AM
DRAWN RLA 7/26/2023 12:00:00 AM
REVIEWED MGD 10/25/2024 12:00:00 AM

MODEL: sht-plnprof03a
FILE NAME: ik13jobs\13L0177A\CAD\Road\Sheet\Plan-Set 3 (8th-10th)\sht-plnprof03.dgn

Final

USER NAME = ander00846	DESIGNED - SD/JC	REVISED -	
	DRAWN - RA/CL	REVISED -	
PLOT SCALE = 0.16666667 ' / in.	CHECKED - MGD	REVISED -	
PLOT DATE = 3/26/2025	DATE - 10/25/2024 12:00:00 AM	REVISED -	

STATE OF ILLINOIS
DEPARTMENT OF TRANSPORTATION

COURT STREET
PLAN AND PROFILES

SCALE: 1" = 20' | SHEET OF SHEETS | STA. TO STA.

F.A.P. RTE.	SECTION	COUNTY	TOTAL SHEETS	SHEET NO.
693	20-00196-01-RS	TAZEWELL	136	41
	13L0177A	CONTRACT NO. 89859		
	ILLINOIS	FED. AID PROJECT		

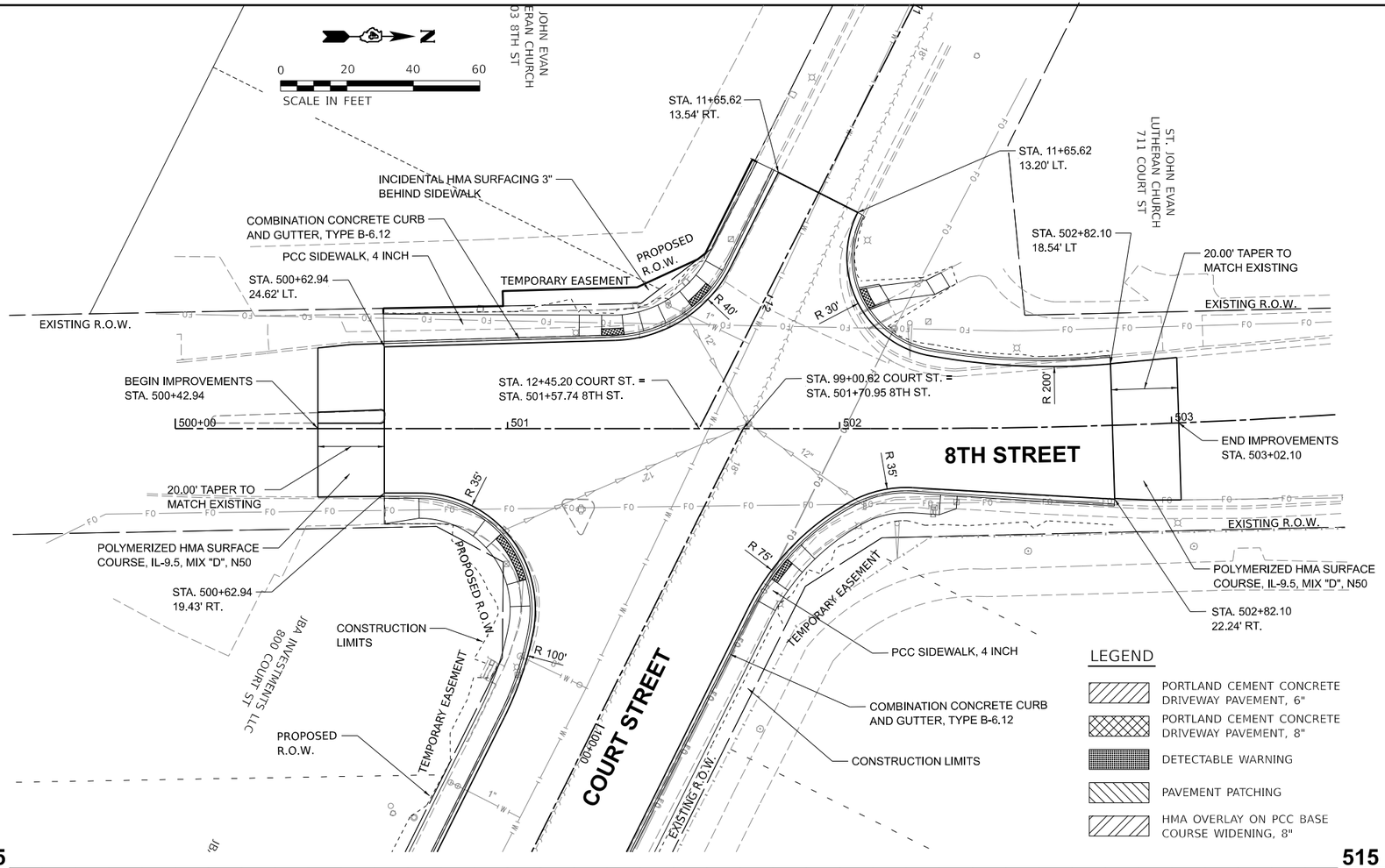

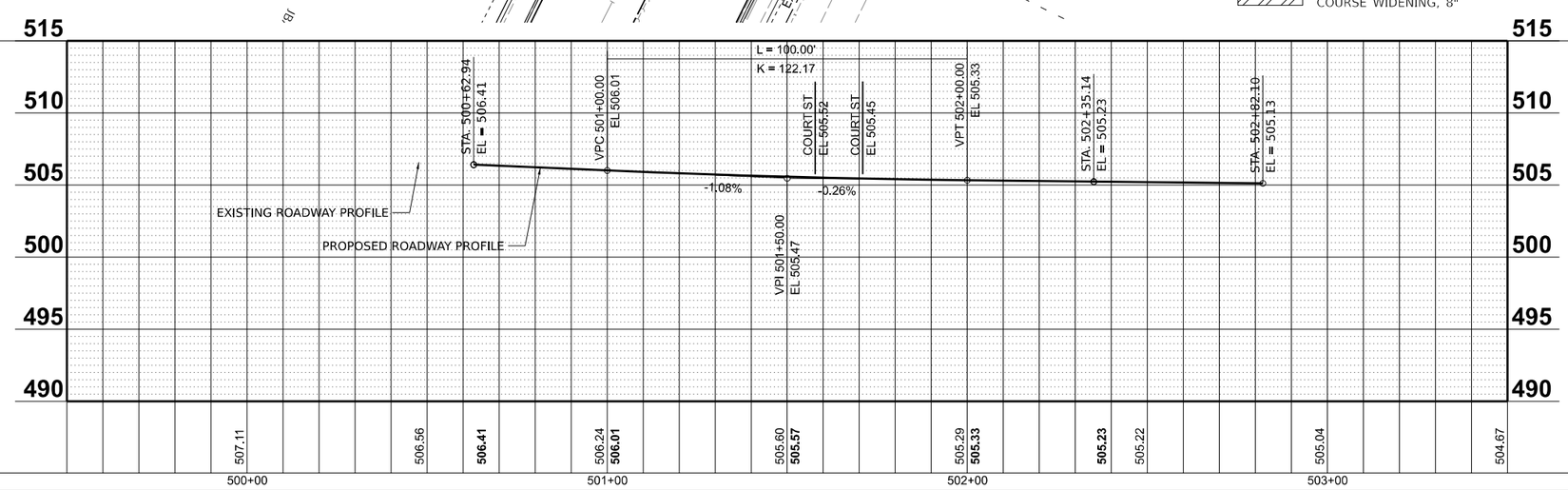

PLAN	BY	DATE
SURVEYED		
PLOTTED		
ALIGNMENT CHECKED		
RT. OF WAY CHECKED		
CADD FILE NAME		
NOTE BOOK NO.		

PROFILE	BY	DATE
SURVEYED		
PLOTTED		
GRADES CHECKED		
B.M. NOTED		
STRUCTURE NOTATNS CHKD		
NOTE BOOK NO.		

© Copyright Hanson Professional Services Inc. 2025

HANSON
Hanson Professional Services Inc.

DESIGNED	FC	7/26/2023 12:00:00 AM
DRAWN	RLA	7/26/2023 12:00:00 AM
REVIEWED	MGD	10/25/2024 12:00:00 AM

MODEL: PNP_8th_8th_PNP
FILE NAME: I:\13jobs\13L0177A\CAD\Road\Sheet\Plan-Set 3 (8th-10th)\st-plnprof04.dgn

Final

USER NAME = ander00846	DESIGNED - SD/JC	REVISED -	
	DRAWN - RA/CL	REVISED -	
PLOT SCALE = 0.16666667 ' / in.	CHECKED - MGD	REVISED -	
PLOT DATE = 3/26/2025	DATE - 10/25/2024 12:00:00 AM	REVISED -	

STATE OF ILLINOIS
DEPARTMENT OF TRANSPORTATION

8TH STREET
PLAN AND PROFILES

SCALE: 1" = 20' | SHEET OF SHEETS | STA. TO STA.

F.A.P. RTE.	SECTION	COUNTY	TOTAL SHEETS	SHEET NO.
693	20-00196-01-RS	TAZEWELL	136	42
	13L0177A	CONTRACT NO. 89859		
	ILLINOIS	FED. AID PROJECT		

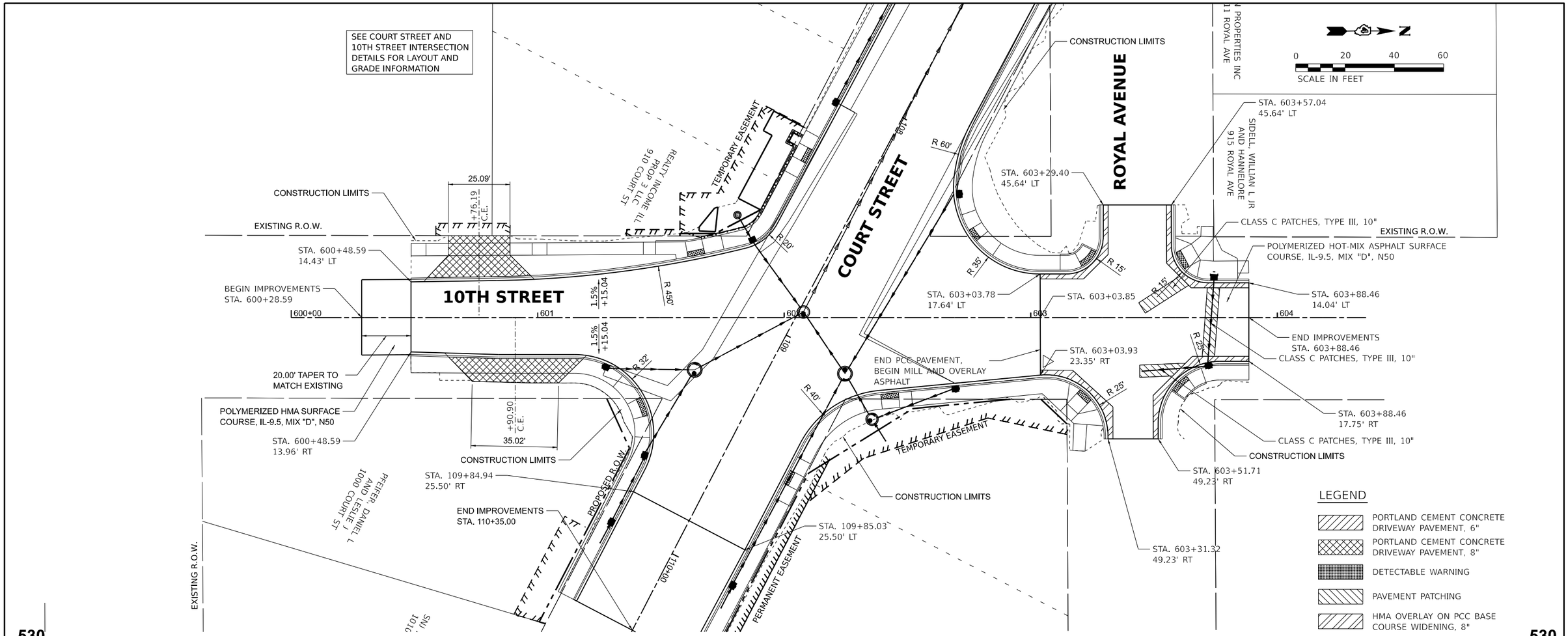

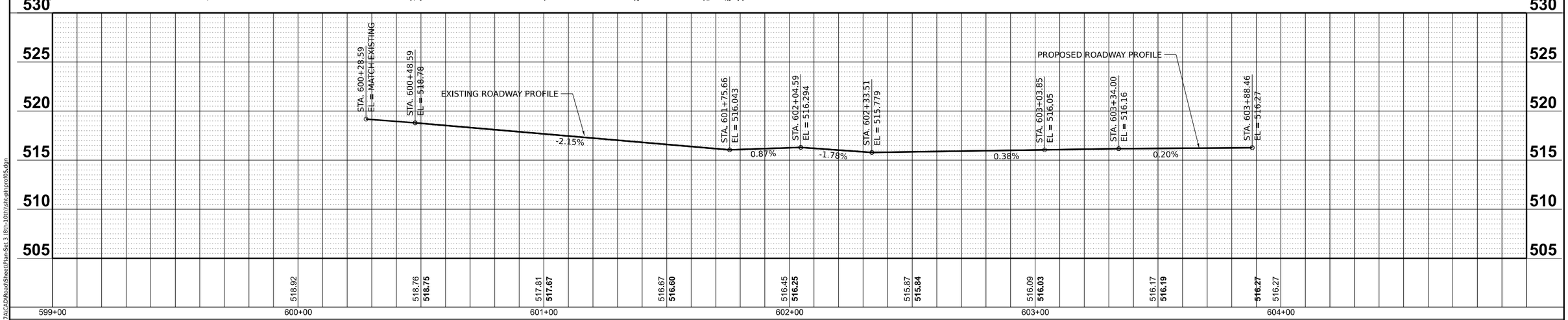

PLAN			
NOTE BOOK NO.	SURVEYED	PLOTTED	AUTOMENT CHECKED
	RT. OF WAY CHECKED	CADD FILE NAME	

PROFILE			
NOTE BOOK NO.	SURVEYED	PLOTTED	GRADES CHECKED
	B.M. NOTED	STRUCTURE NOTAT'NS CHKD	

BY	DATE

BY	DATE

© Copyright Hanson Professional Services Inc. 2025

HANSON
Hanson Professional Services Inc.

DESIGNED	JFC	7/26/2023 12:00:00 AM
DRAWN	RLA	7/26/2023 12:00:00 AM
REVIEWED	MGD	10/25/2024 12:00:00 AM

MODEL: AL_10th - Plan 1
FILE NAME: I:\13jobs\13L0177A\CAD\Road\Sheet\Plan-Set 3 (8th-10th)\sht-pln\pro05.dgn

Final

USER NAME = ander00846	DESIGNED - SD/JC	REVISED -	
	DRAWN - RA/CL	REVISED -	
PLOT SCALE = 0.16666667 ' / in.	CHECKED - MGD	REVISED -	
PLOT DATE = 3/26/2025	DATE - 10/25/2024 12:00:00 AM	REVISED -	

STATE OF ILLINOIS
DEPARTMENT OF TRANSPORTATION

10TH STREET
PLAN AND PROFILES

SCALE: 1" = 20' | SHEET OF SHEETS | STA. TO STA.

F.A.P. RTE.	SECTION	COUNTY	TOTAL SHEETS	SHEET NO.
693	20-00196-01-RS	TAZEWELL	136	43
	13L0177A	CONTRACT NO. 89859		
		ILLINOIS	FED. AID PROJECT	

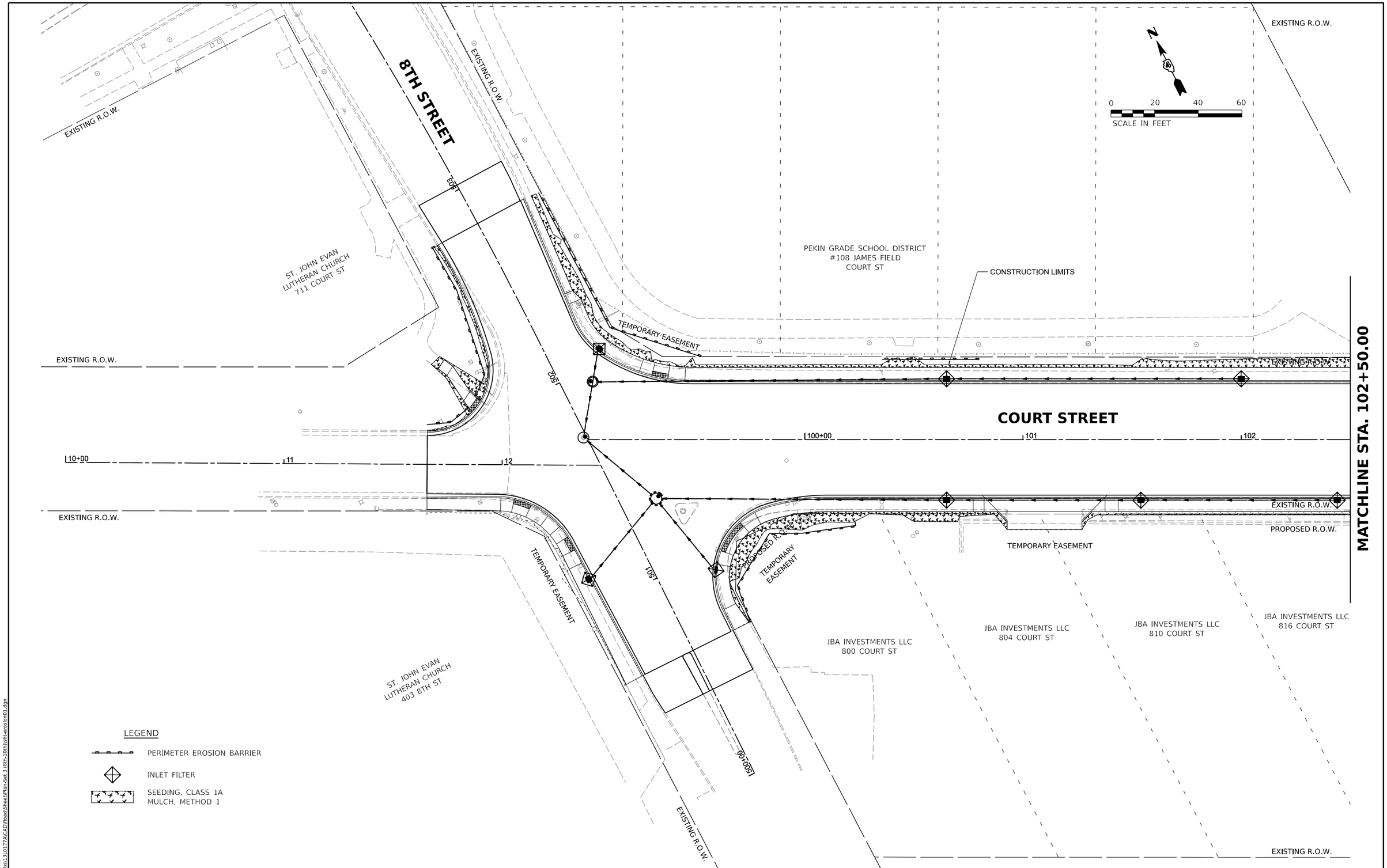

LEGEND

PERIMETER EROSION BARRIER

INLET FILTER

SEEDING, CLASS 1A
MULCH, METHOD 1

© Copyright Hanson Professional Services Inc. 2025

HANSON
Hanson Professional Services Inc.

DESIGNED	JFC	7/26/2023 12:00:00 AM
DRAWN	RLA	7/26/2023 12:00:00 AM
REVIEWED	MGD	10/25/2024 12:00:00 AM

MODEL: sht-erosion01
FILE NAME: R:\13Jobs\13L0177A\CAD\RoadSheet\Plan-Set 3 (8th-10th)\sht-erosion01.dgn

Final

USER NAME = ander00846	DESIGNED - SD/JC	REVISED -	STATE OF ILLINOIS DEPARTMENT OF TRANSPORTATION	COURT STREET EROSION CONTROL PLANS	
	DRAWN - RA/CL	REVISED -			
PLOT SCALE = 0.16666667 ' / in.	CHECKED - MGD	REVISED -			
PLOT DATE = 3/26/2025	DATE - 10/25/2024 12:00:00 AM	REVISED -		SCALE: 1" = 20' SHEET OF SHEETS STA. TO STA.	

F.A.P. RTE.	SECTION	COUNTY	TOTAL SHEETS	SHEET NO.
693	20-00196-01-RS	TAZEWELL	136	44
	13L0177A	CONTRACT NO. 89859		
	ILLINOIS	FED. AID PROJECT		

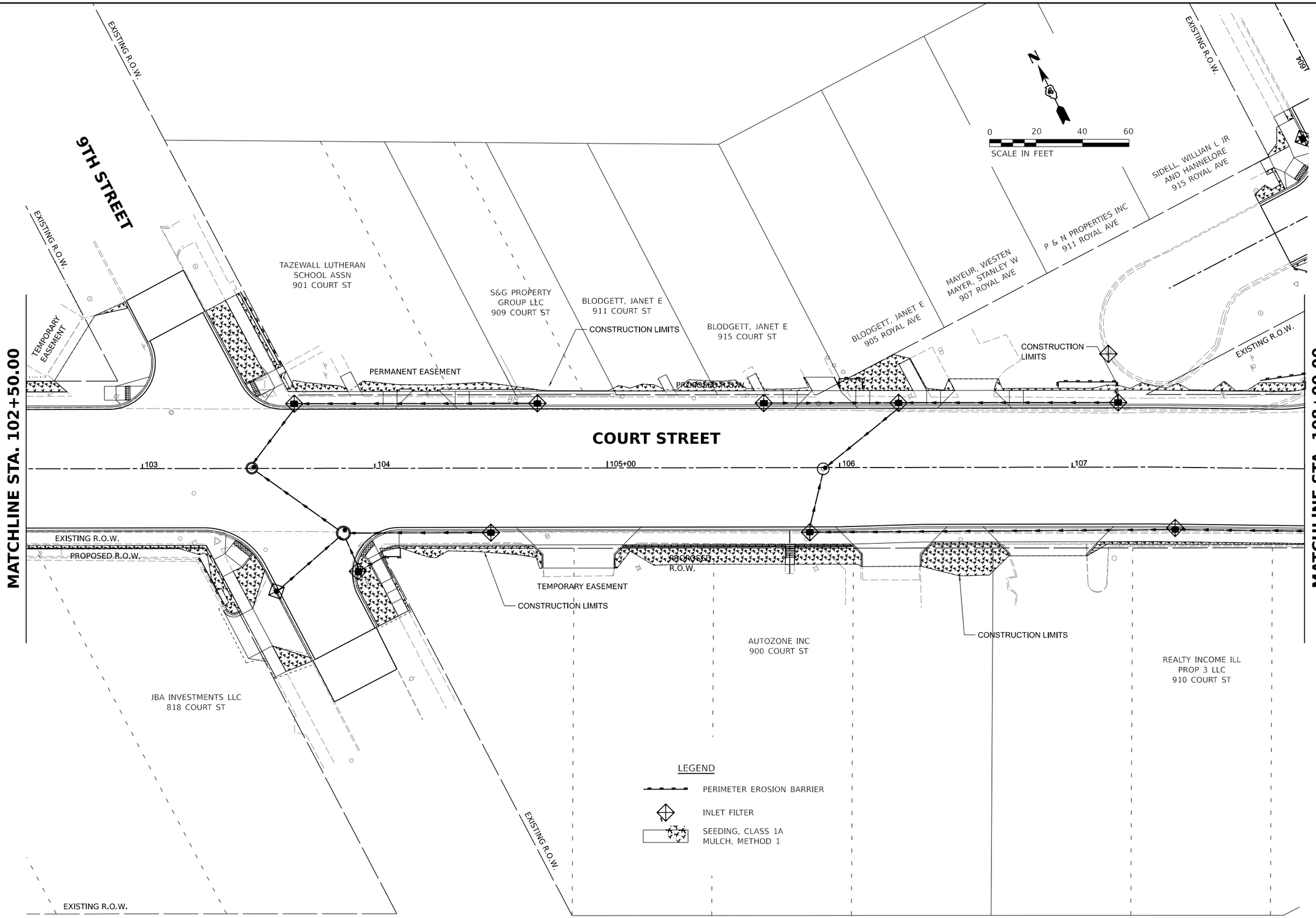

© Copyright Hanson Professional Services Inc. 2025

HANSON
Hanson Professional Services Inc.

DESIGNED	JFC	7/26/2023 12:00:00 AM
DRAWN	RLA	7/26/2023 12:00:00 AM
REVIEWED	MGD	10/25/2024 12:00:00 AM

MODEL: sht-erosion02
FILE NAME: R:\13Jobs\13L0177A\CAD\RoadSheet\Plan-Set 3 (8th-10th)\sht-erosion02.dgn

Final

USER NAME = ander00846	DESIGNED - SD/JC	REVISED -	STATE OF ILLINOIS DEPARTMENT OF TRANSPORTATION	COURT STREET EROSION CONTROL PLANS	
	DRAWN - RA/CL	REVISED -			
PLOT SCALE = 0.16666667 ' / in.	CHECKED - MGD	REVISED -			
PLOT DATE = 3/26/2025	DATE - 10/25/2024 12:00:00 AM	REVISED -		SCALE: 1" = 20' SHEET OF SHEETS STA. TO STA.	

F.A.P. RTE.	SECTION	COUNTY	TOTAL SHEETS	SHEET NO.
693	20-00196-01-RS	TAZEWELL	136	45
	13L0177A	CONTRACT NO. 89859		
	ILLINOIS	FED. AID PROJECT		

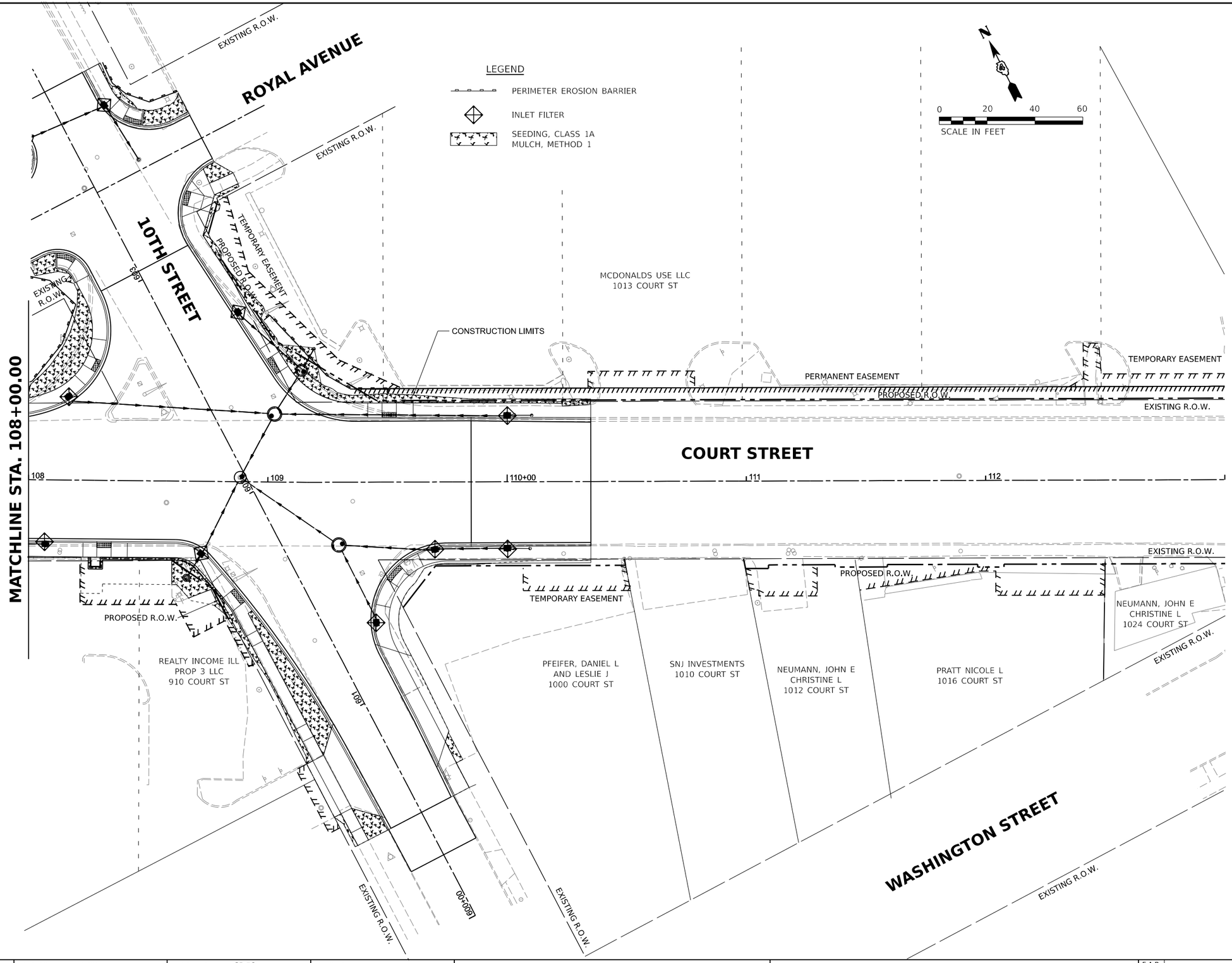

© Copyright Hanson Professional Services Inc. 2025

HANSON
Hanson Professional Services Inc.

DESIGNED	JFC	7/26/2023 12:00:00 AM
DRAWN	RLA	7/26/2023 12:00:00 AM
REVIEWED	MGD	10/25/2024 12:00:00 AM

MODEL: sht-erosion03
FILE NAME: K:\13Jobs\13L0177A\CAD\RoadSheet\Plan-Set 3 (8th-10th)\sht-erosion03.dgn

Final

USER NAME = ander00846	DESIGNED - SD/JC	REVISED -	
	DRAWN - RA/CL	REVISED -	
PLOT SCALE = 0.16666667 ' / in.	CHECKED - MGD	REVISED -	
PLOT DATE = 3/26/2025	DATE - 10/25/2024 12:00:00 AM	REVISED -	

STATE OF ILLINOIS
DEPARTMENT OF TRANSPORTATION

COURT STREET
EROSION CONTROL PLANS

SCALE: 1" = 20' | SHEET OF SHEETS | STA. TO STA.

F.A.P. RTE.	SECTION	COUNTY	TOTAL SHEETS	SHEET NO.
693	20-00196-01-RS	TAZEWELL	136	46
	13L0177A	CONTRACT NO. 89859		
		ILLINOIS	FED. AID PROJECT	

PIPE NO.	FROM STR.	U/S INVERT	TO STR.	D/S INVERT	CLASS / TYPE	DIA.	LENGTH	SLOPE	CLSM (CY)
P1	S1	502.74	S3	501.74	STORM SEWERS, CLASS A, TYPE 1	12	15	6.50%	2
P2	S2	502.73	S4	500.55	STORM SEWERS, TYPE 1, WATER MAIN QUALITY PIPE	12	48	4.52%	8
P3	S3	500.74	EX MH-7391	500.22	STORM SEWERS, CLASS A, TYPE 1	12	26	2.00%	8
P4	S4	498.60	EX MH-7391	498.12	STORM SEWERS, TYPE 1, WATER MAIN QUALITY PIPE	12	44	1.10%	36
P5	S5	502.75	S4	500.55	STORM SEWERS, CLASS A, TYPE 1	12	42	5.24%	8
P6	S6	503.43	S4	500.55	STORM SEWERS, TYPE 1, WATER MAIN QUALITY PIPE	12	133	2.16%	34
P7	S7	504.50	S6	503.53	STORM SEWERS, TYPE 1, WATER MAIN QUALITY PIPE	12	89	1.09%	17
P8	S8	506.75	S7	504.60	STORM SEWERS, TYPE 1, WATER MAIN QUALITY PIPE	12	90	2.39%	12
P9	S9	506.21	S17	504.57	STORM SEWERS, CLASS A, TYPE 1	12	135	1.21%	18
P17	S17	504.47	S3	501.74	STORM SEWERS, CLASS A, TYPE 1	12	162	1.68%	21

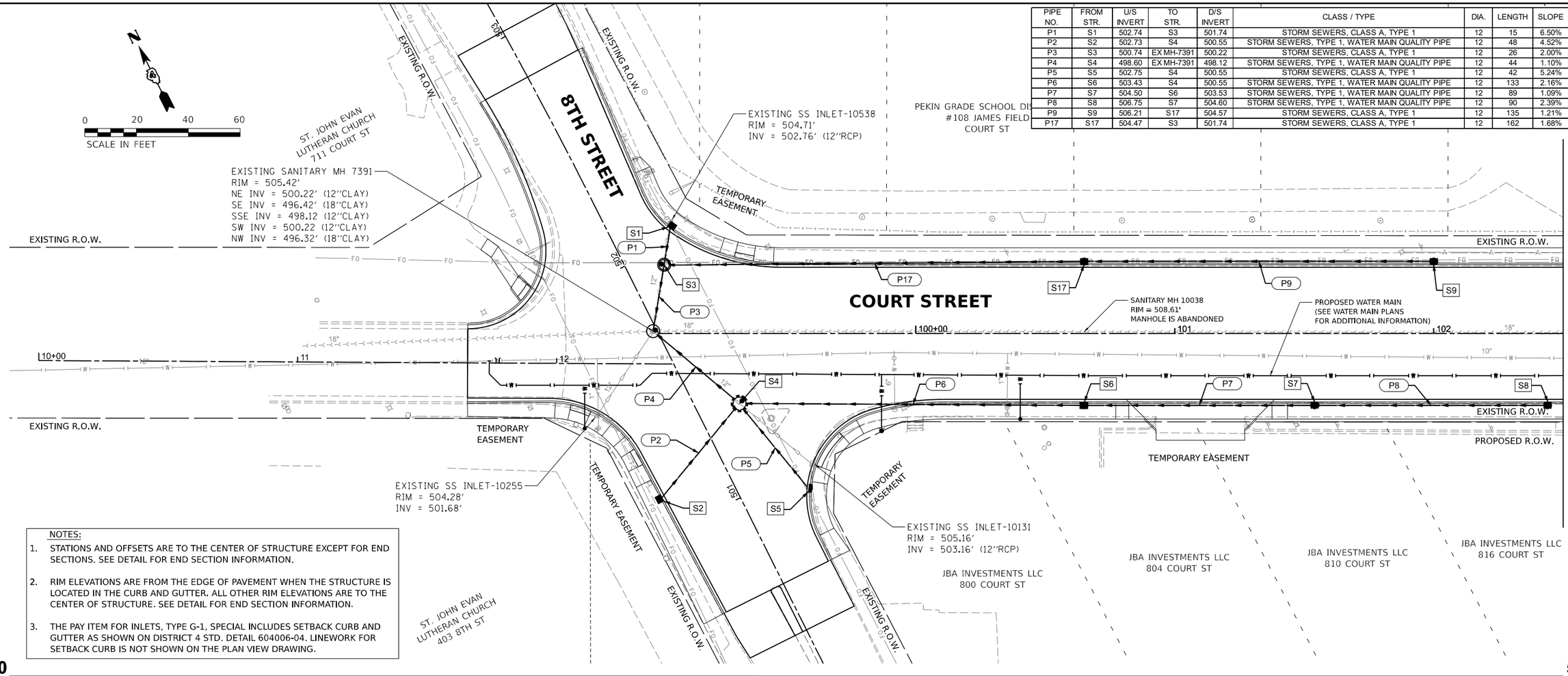

NOTES:

1. STATIONS AND OFFSETS ARE TO THE CENTER OF STRUCTURE EXCEPT FOR END SECTIONS. SEE DETAIL FOR END SECTION INFORMATION.
2. RIM ELEVATIONS ARE FROM THE EDGE OF PAVEMENT WHEN THE STRUCTURE IS LOCATED IN THE CURB AND GUTTER. ALL OTHER RIM ELEVATIONS ARE TO THE CENTER OF STRUCTURE. SEE DETAIL FOR END SECTION INFORMATION.
3. THE PAY ITEM FOR INLETS, TYPE G-1, SPECIAL INCLUDES SETBACK CURB AND GUTTER AS SHOWN ON DISTRICT 4 STD. DETAIL 604006-04. LINEWORK FOR SETBACK CURB IS NOT SHOWN ON THE PLAN VIEW DRAWING.

STR. NO.	STATION	OFFSET		STRUCTURE TYPE	RIM ELEVATION	INVERT ELEVATIONS INV. IN	US PIPE	INV. IN	US PIPE	INV. IN	US PIPE	INV. OUT	DS PIPE
S1	502+05.79	23.34	RT	INLETS, TYPE G-1, SPECIAL	505.25							502.74	P1
S2	501+13.51	28.36	LT	INLETS, TYPE G-1, SPECIAL	505.23							502.73	P2
S3	501+93.80	13.83	RT	MANHOLES, TYPE A, 4'-DIAMETER, TYPE 1 FRAME, CLOSED LID	505.42	501.74	P1	501.74	P17			500.74	P3
S4	501+32.84	15.91	RT	MANHOLES, TYPE A, 6'-DIAMETER, TYPE 1 FRAME, CLOSED LID	505.77	500.55	P2	500.55	P5	500.55	P6	498.60	P4
S5	500.91.40	25.48	RT	INLETS, TYPE B, TYPE 11 FRAME AND GRATE	505.62							502.75	P5
S6	100+65.02	27.75	RT	INLETS, TYPE G-1, SPECIAL	507.35	503.53	P7					503.43	P6
S7	101+54.02	27.75	RT	INLETS, TYPE G-1, SPECIAL	508.56	504.60	P8					504.50	P7
S8	102+44.02	27.75	RT	INLETS, TYPE G-1, SPECIAL	509.71							506.75	P8
S9	102+00.02	27.75	LT	INLETS, TYPE G-1, SPECIAL	509.12							506.21	P9
S17	100+65.02	27.75	LT	INLETS, TYPE G-1, SPECIAL	507.35	504.57	P9					504.47	P17

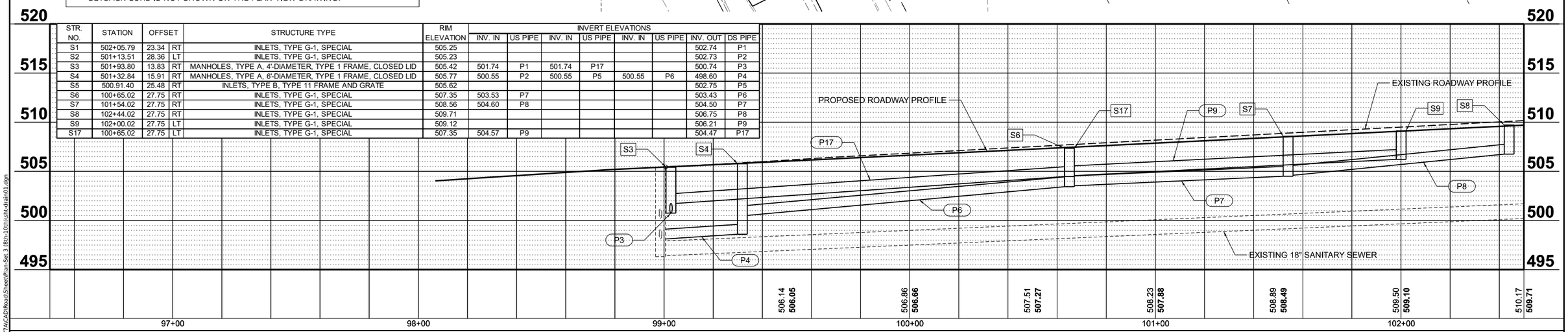

Final	USER NAME = ander00846	DESIGNED - DBH	REVISED -
		DRAWN - RA/CL	REVISED -
	PLOT SCALE = 0.16666667 ' / in.	CHECKED - BAB	REVISED -
	PLOT DATE = 3/26/2025	DATE - 10/25/2024 12:00:00 AM	REVISED -

STATE OF ILLINOIS
DEPARTMENT OF TRANSPORTATION

COURT STREET
DRAINAGE PLANS

SCALE: 1" = 20' | SHEET OF SHEETS | STA. TO STA.

F.A.P. RTE.	SECTION	COUNTY	TOTAL SHEETS	SHEET NO.
693	20-00196-01-RS	TAZEWELL	136	47
	13L0177A	CONTRACT NO. 89859		

ILLINOIS | FED. AID PROJECT

PLAN: SURVEYED / PLOTTED / ALIGNMENT CHECKED / RT. OF WAY CHECKED / CADD FILE NAME / NOTE BOOK NO. / BY / DATE

PROFILE: SURVEYED / PLOTTED / GRADES CHECKED / B.M. NOTED / STRUCTURE NOTAT'NS CHKD / NOTE BOOK NO. / BY / DATE

DESIGNED JFC 7/26/2023 12:00:00 AM
DRAWN RLA 7/26/2023 12:00:00 AM
REVIEWED MGD 10/25/2024 12:00:00 AM

MODEL: sht-drain01
FILE NAME: I:\13jobs\13L0177A\CAD\Road\Sheet\Plan-Set 3 (8th-10th)\sht-drain01.dgn

PIPE NO.	FROM STR.	U/S INVERT	TO STR.	D/S INVERT	CLASS / TYPE	DIA.	LENGTH	SLOPE	CLSM (CY)
P10	S10	505.80	S20	505.65	STORM SEWERS, TYPE 1, WATER MAIN QUALITY PIPE	12	38	0.39%	12
P11	S11	508.14	EX MH-7282	505.52	STORM SEWERS, TYPE 1, WATER MAIN QUALITY PIPE	12	33	7.90%	8
P12	S12	507.40	S20	505.65	STORM SEWERS, CLASS A, TYPE 1	12	18	9.89%	5
P12A	EXIST. PIPE	509.23	S12	508.84	STORM SEWERS (SPECIAL), 8"	8	13	3.00%	2
P13	S13	508.06	S20	505.65	STORM SEWERS, TYPE 1, WATER MAIN QUALITY PIPE	12	63	3.80%	18
P14	S14	509.23	S11	508.24	STORM SEWERS, TYPE 1, WATER MAIN QUALITY PIPE	12	105	0.95%	14
P15	S15	510.18	S18	509.38	STORM SEWERS, CLASS A, TYPE 1	12	58	1.38%	10
P16	S16	506.75	EX MH-7293	506.50	STORM SEWERS, TYPE 1, WATER MAIN QUALITY PIPE	12	28	0.90%	25
P18	S18	509.03	EX MH-7293	508.60	STORM SEWERS, TYPE 1, WATER MAIN QUALITY PIPE	15	43	1.00%	16
P19	S19	511.51	S18	509.38	STORM SEWERS, CLASS A, TYPE 1	12	94	2.25%	14
P20	S20	505.55	EX MH-7282	505.22	STORM SEWERS, TYPE 1, WATER MAIN QUALITY PIPE	12	48	0.68%	30
P21	S21	510.43	S16	509.60	STORM SEWERS, TYPE 1, WATER MAIN QUALITY PIPE	12	141	0.59%	27
P22	S22	511.38	S21	510.53	STORM SEWERS, TYPE 1, WATER MAIN QUALITY PIPE	12	67	1.28%	13
P25	EX-MH-9445	511.66	S19	511.61	STORM SEWERS, CLASS A, TYPE 1	12	5	1.02%	0

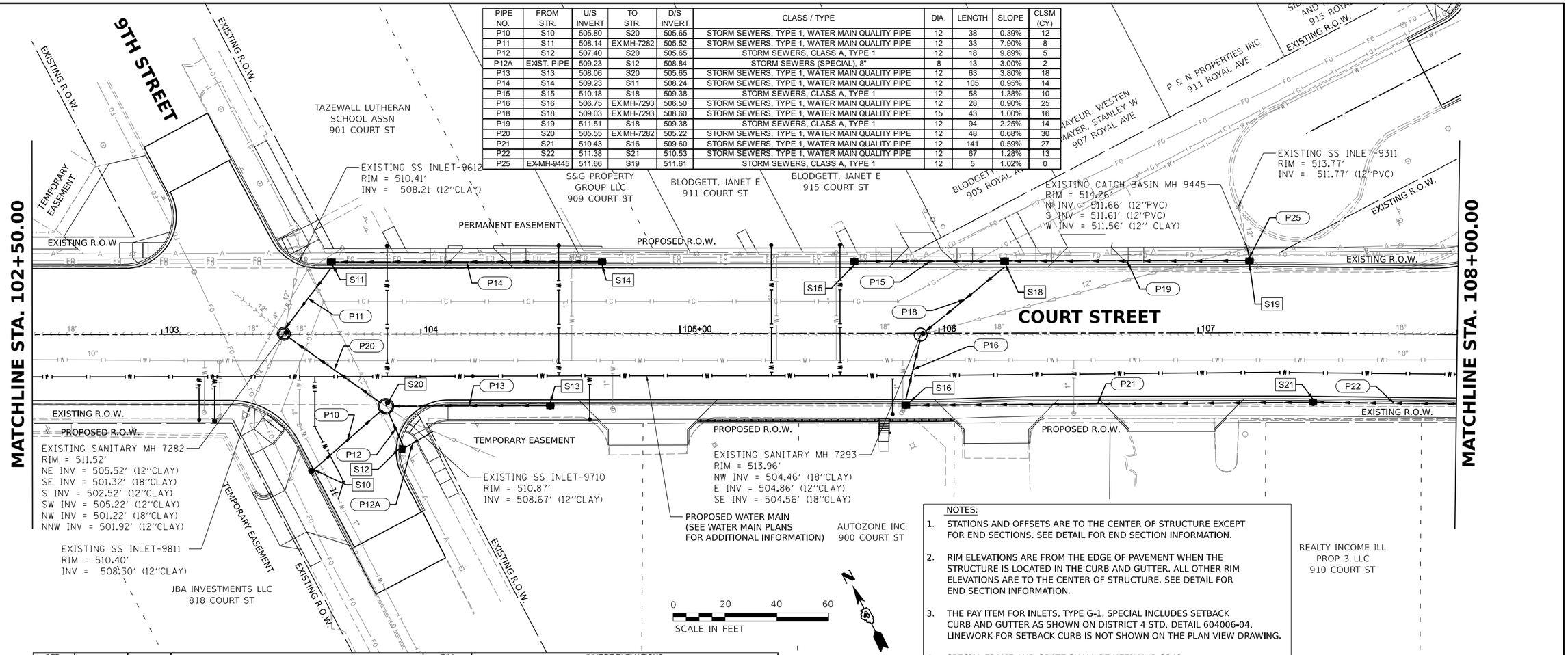

NOTES:

1. STATIONS AND OFFSETS ARE TO THE CENTER OF STRUCTURE EXCEPT FOR END SECTIONS. SEE DETAIL FOR END SECTION INFORMATION.
2. RIM ELEVATIONS ARE FROM THE EDGE OF PAVEMENT WHEN THE STRUCTURE IS LOCATED IN THE CURB AND GUTTER. ALL OTHER RIM ELEVATIONS ARE TO THE CENTER OF STRUCTURE. SEE DETAIL FOR END SECTION INFORMATION.
3. THE PAY ITEM FOR INLETS, TYPE G-1, SPECIAL INCLUDES SETBACK CURB AND GUTTER AS SHOWN ON DISTRICT 4 STD. DETAIL 604006-04. LINEWORK FOR SETBACK CURB IS NOT SHOWN ON THE PLAN VIEW DRAWING.
4. SPECIAL FRAME AND GRATE SHALL BE NEENAH R-3342.

STR. NO.	STATION	OFFSET		STRUCTURE TYPE	RIM ELEVATION	INVERT ELEVATIONS INV. IN	US PIPE	INV. IN	US PIPE	INV. IN	US PIPE	INV. OUT	DS PIPE
S10	103+57.43	52.95	RT	INLETS, TYPE A, WITH SPECIAL FRAME AND GRATE	510.42							505.80	P10
S11	103+65.41	27.75	LT	INLETS, TYPE G-1, SPECIAL	511.15	508.24	P14					508.14	P11
S12	103+92.75	44.43	RT	INLETS, TYPE G-1, SPECIAL	510.85	508.84	P12A					507.40	P12
S13	104+49.89	27.75	RT	INLETS, TYPE G-1, SPECIAL	511.97							508.06	P13
S14	104+70.02	27.75	LT	INLETS, TYPE G-1, SPECIAL	512.19							509.23	P14
S15	105+67.46	27.75	LT	INLETS, TYPE G-1, SPECIAL	513.19							510.18	P15
S16	105+87.13	27.75	RT	INLETS, TYPE G-1, SPECIAL	513.48	509.60	P21					506.75	P16
S18	106+25.37	29.06	LT	INLET-MANHOLE, TYPE G-1, 7' DIAMETER, SPECIAL	513.77	509.38	P19	509.38	P15			509.03	P18
S19	107+19.84	27.75	LT	INLETS, TYPE G-1, SPECIAL	514.41	511.61	P25					511.51	P19
S20	103+86.46	27.92	RT	MANHOLES, TYPE A, 5'-DIAMETER, TYPE 1 FRAME, CLOSED LID	511.33	505.65	P12	505.65	P13	505.65	P10	505.55	P20
S21	107+44.61	26.75	RT	INLETS, TYPE G-1, SPECIAL	514.65	510.53	P22					510.43	P21

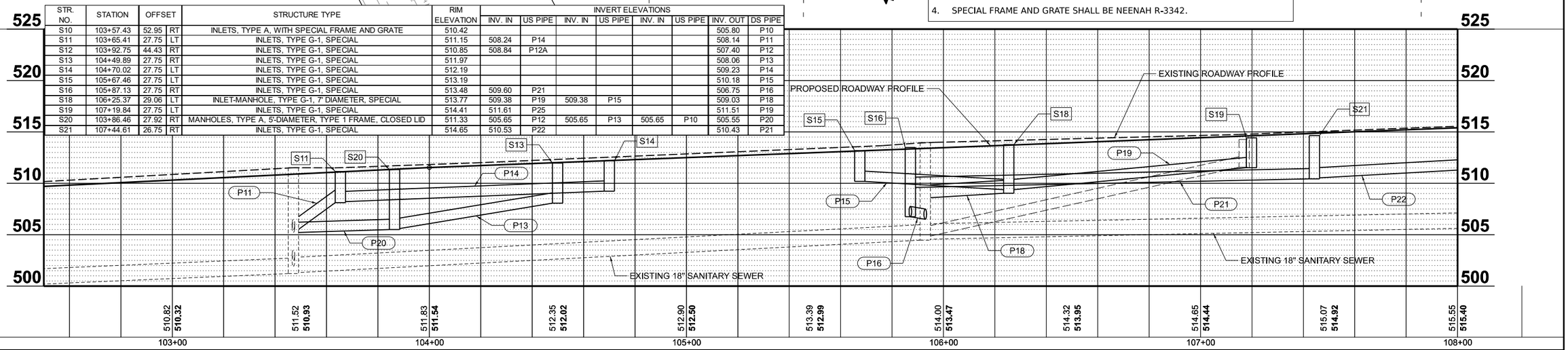

Final	USER NAME = ander00846	DESIGNED - DBH	REVISED -	STATE OF ILLINOIS DEPARTMENT OF TRANSPORTATION	COURT STREET DRAINAGE PLANS
		DRAWN - RA/CL	REVISED -		
	PLOT SCALE = 0.16666667 ' / in.	CHECKED - BAB	REVISED -		
	PLOT DATE = 3/26/2025	DATE - 10/25/2024 12:00:00 AM	REVISED -		SCALE: 1" = 20' SHEET OF SHEETS STA. TO STA.

F.A.P. RTE.	SECTION	COUNTY	TOTAL SHEETS	SHEET NO.
693	20-00196-01-RS	TAZEWELL	136	48
	13L0177A	CONTRACT NO. 89859		
		ILLINOIS	FED. AID PROJECT	

PLAN	BY	DATE
SURVEYED		
PLOTTED		
ALIGNMENT CHECKED		
RT. OF WAY CHECKED		
CADD FILE NAME		
NOTE BOOK NO.		

PROFILE	BY	DATE
SURVEYED		
PLOTTED		
GRADES CHECKED		
B.M. NOTED		
STRUCTURE NOTAT'NS CH'KD		
NOTE BOOK NO.		

© Copyright Hanson Professional Services Inc. 2025

HANSON
Hanson Professional Services Inc.

DESIGNED	JFC	7/26/2023 12:00:00 AM
DRAWN	RLA	7/26/2023 12:00:00 AM
REVIEWED	MGD	10/25/2024 12:00:00 AM

MODEL: sht-drain02
FILE NAME: I:\13jobs\13L0177A\CADRoad\Sheet\Plan-Set 3 (8th-10th)\sht-drain02.dgn

PIPE NO.	FROM STR.	U/S INVERT	TO STR.	D/S INVERT	CLASS / TYPE	DIA.	LENGTH	SLOPE	CLSM (CY)
P22	S22	511.38	S21	510.53	STORM SEWERS, TYPE 1, WATER MAIN QUALITY PIPE	12	67	1.28%	13
P23	S23	511.30	EXMH-7306	510.85	STORM SEWERS, TYPE 1, WATER MAIN QUALITY PIPE	12	36	1.25%	11
P24	S24	512.11	S28	512.00	STORM SEWERS, CLASS A, TYPE 1	12	22	0.50%	0
P26	S26	514.00	S30	512.20	STORM SEWERS, CLASS A, TYPE 1	12	36	4.99%	5
P27	S27	512.60	S28	512.00	STORM SEWERS, TYPE 1, WATER MAIN QUALITY PIPE	12	86	0.69%	11
P28	S28	511.85	EXMH-7306	510.85	STORM SEWERS, TYPE 1, WATER MAIN QUALITY PIPE	12	30	3.32%	8
P29	S29	512.85	S28	512.00	STORM SEWERS, CLASS A, TYPE 1	12	97	0.87%	15
P30	S30	511.10	EXMH-7306	510.85	STORM SEWERS, TYPE 1, WATER MAIN QUALITY PIPE	12	50	0.50%	17
P31	S31	512.93	S32	512.50	STORM SEWERS, CLASS A, TYPE 1	12	31	1.39%	6
P33	S33	511.50	S23	511.40	STORM SEWERS, TYPE 1, WATER MAIN QUALITY PIPE	8	12	0.85%	4
P34	S32	512.40	S30	512.20	STORM SEWERS, CLASS A, TYPE 1	12	40	0.50%	9
P37	S37	512.40	S24	512.21	STORM SEWERS, CLASS A, TYPE 1	12	37	0.52%	5
P38	EXIST. PIPE	513.40	S24	512.38	STORM SEWERS, CLASS A, TYPE 1	12	8	12.18%	1

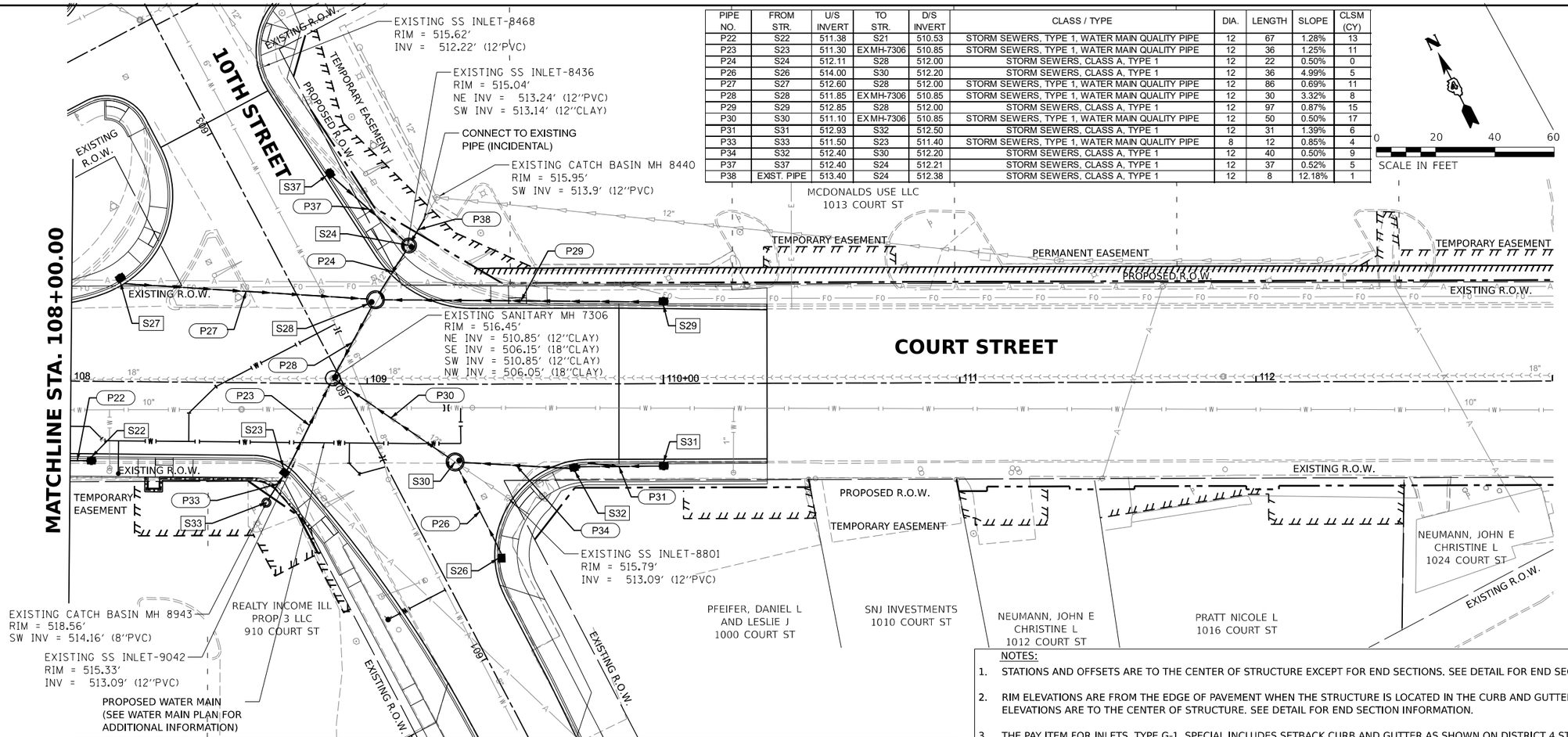

NOTES:

1. STATIONS AND OFFSETS ARE TO THE CENTER OF STRUCTURE EXCEPT FOR END SECTIONS. SEE DETAIL FOR END SECTION INFORMATION.
2. RIM ELEVATIONS ARE FROM THE EDGE OF PAVEMENT WHEN THE STRUCTURE IS LOCATED IN THE CURB AND GUTTER. ALL OTHER RIM ELEVATIONS ARE TO THE CENTER OF STRUCTURE. SEE DETAIL FOR END SECTION INFORMATION.
3. THE PAY ITEM FOR INLETS, TYPE G-1, SPECIAL INCLUDES SETBACK CURB AND GUTTER AS SHOWN ON DISTRICT 4 STD. DETAIL 604006-04. LINEWORK FOR SETBACK CURB IS NOT SHOWN ON THE PLAN VIEW DRAWING.

STR. NO.	STATION	OFFSET		STRUCTURE TYPE	RIM ELEVATION	INVERT ELEVATIONS INV. IN	US PIPE	INV. IN	US PIPE	INV. IN	US PIPE	INV. OUT	DS PIPE
S22	108+07.23	26.75	RT	INLETS, TYPE G-1, SPECIAL	515.24							511.38	P22
S23	601+87.09	31.52	LT	INLETS, TYPE G-1, SPECIAL	515.77	511.40	P33					511.30	P23
S24	602+35.62	41.27	RT	MANHOLES, TYPE A, 4'-DIAMETER, TYPE 1 FRAME, CLOSED LID	515.08	512.21	P37	512.38	P38			512.11	P24
S26	601+27.57	20.09	RT	INLETS, TYPE G-1, SPECIAL	516.97							514.00	P26
S27	602+71.13	50.06	LT	INLETS, TYPE G-1, SPECIAL	515.43							512.60	P27
S28	602+24.63	22.77	RT	MANHOLES, TYPE A, 5'-DIAMETER, TYPE 1 FRAME, CLOSED LID	515.46	512.00	P24	512.00	P29	512.00	P27	511.85	P28
S29	110+00.07	27.75	LT	INLETS, TYPE G-1, SPECIAL	516.63							512.85	P29
S30	601+63.78	21.22	RT	MANHOLES, TYPE A, 5'-DIAMETER, TYPE 1 FRAME, CLOSED LID	516.34	512.20	P26	512.20	P34			511.10	P30
S31	109+99.99	27.75	RT	INLETS, TYPE G-1, SPECIAL	516.80							512.93	P31
S32	109+69.79	28.26	RT	INLETS, TYPE G-1, SPECIAL	516.59	512.50	P31					512.40	P34
S33	601+81.15	41.57	LT	INLETS, TYPE A, TYPE 8 GRATE	518.56							511.50	P33
S37	602+69.29	26.67	RT	INLETS, TYPE G-1, SPECIAL	515.60							512.40	P37

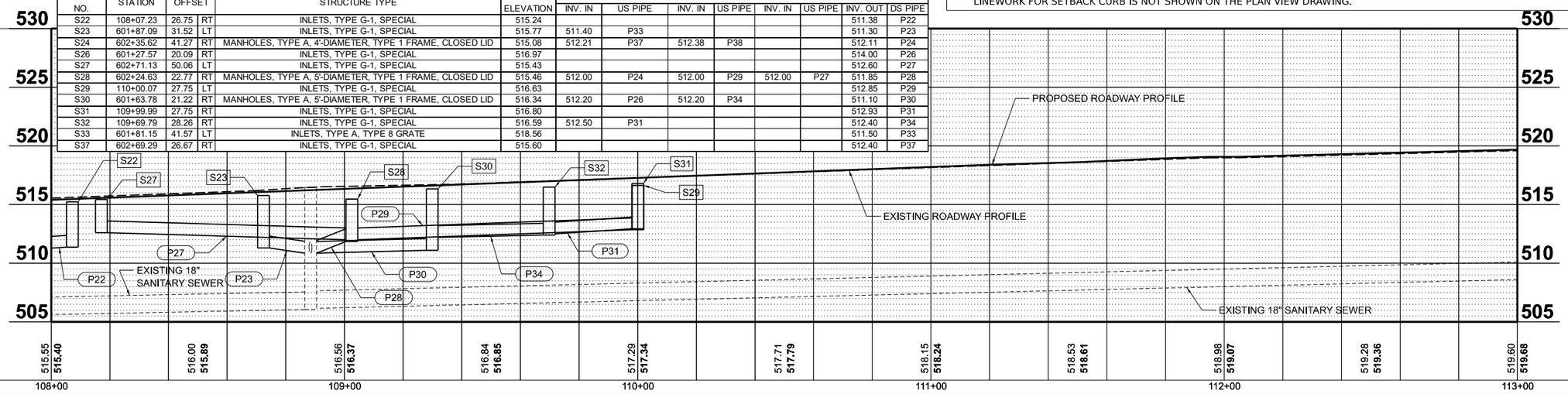

PLAN — SURVEYED / PLOTTED / ALIGNMENT CHECKED / RT. OF WAY CHECKED / CADD FILE NAME — NOTE BOOK NO. — BY — DATE

PROFILE — SURVEYED / PLOTTED / GRADES CHECKED / B.M. NOTED / STRUCTURE NOTATNS CH'KD — NOTE BOOK NO. — BY — DATE

© Copyright Hanson Professional Services Inc. 2025

HANSON Hanson Professional Services Inc.

DESIGNED JFC 7/26/2023 12:00:00 AM
DRAWN RLA 7/26/2023 12:00:00 AM
REVIEWED MGD 10/25/2024 12:00:00 AM

MODEL: shtdrain03
FILE NAME: I:\13jobs\13L0177A\CAD\Road\Sheet\Plan-Set 3 (8th-10th)\sht-drain03.dgn

Final

USER NAME = ander00846	DESIGNED - DBH	REVISED -
	DRAWN - RA/CL	REVISED -
PLOT SCALE = 0.16666667 ' / in.	CHECKED - BAB	REVISED -
PLOT DATE = 3/26/2025	DATE - 10/25/2024 12:00:00 AM	REVISED -

STATE OF ILLINOIS
DEPARTMENT OF TRANSPORTATION

COURT STREET
DRAINAGE PLANS

SCALE: 1" = 20' | SHEET OF SHEETS | STA. TO STA.

F.A.P. RTE.	SECTION	COUNTY	TOTAL SHEETS	SHEET NO.
693	20-00196-01-RS	TAZEWELL	136	49
	13L0177A	CONTRACT NO. 89859		
	ILLINOIS	FED. AID PROJECT		

STR. NO.	STATION	OFFSET		STRUCTURE TYPE	RIM ELEVATION	INVERT ELEVATIONS							
						INV. IN	US PIPE	INV. IN	US PIPE	INV. IN	US PIPE	INV. OUT	DS PIPE
S35	603+72.27	18.65	RT	INLETS, TYPE G-1	515.62	510.33	P36					510.23	P35
S36	603+73.75	15.00	LT	INLETS, TYPE B, TYPE 11 FRAME AND GRATE	515.39							510.50	P36

PIPE NO.	FROM STR.	U/S INVERT	TO STR.	D/S INVERT	CLASS / TYPE	DIA.	LENGTH	SLOPE	CLSM (CY)
P35	S35	510.23	EX MH-8502	510.04	STORM SEWERS, CLASS A, TYPE 1	12	27	0.70%	10
P36	S36	510.50	S35	510.33	STORM SEWERS, CLASS A, TYPE 1	12	34	0.50%	10

NOTES:

1. STATIONS AND OFFSETS ARE TO THE CENTER OF STRUCTURE EXCEPT FOR END SECTIONS. SEE DETAIL FOR END SECTION INFORMATION.
2. RIM ELEVATIONS ARE FROM THE EDGE OF PAVEMENT WHEN THE STRUCTURE IS LOCATED IN THE CURB AND GUTTER. ALL OTHER RIM ELEVATIONS ARE TO THE CENTER OF STRUCTURE. SEE DETAIL FOR END SECTION INFORMATION.
3. THE PAY ITEM FOR INLETS, TYPE G-1, SPECIAL INCLUDES SETBACK CURB AND GUTTER AS SHOWN ON DISTRICT 4 STD. DETAIL 604006-04. LINEWORK FOR SETBACK CURB IS NOT SHOWN ON THE PLAN VIEW DRAWING.

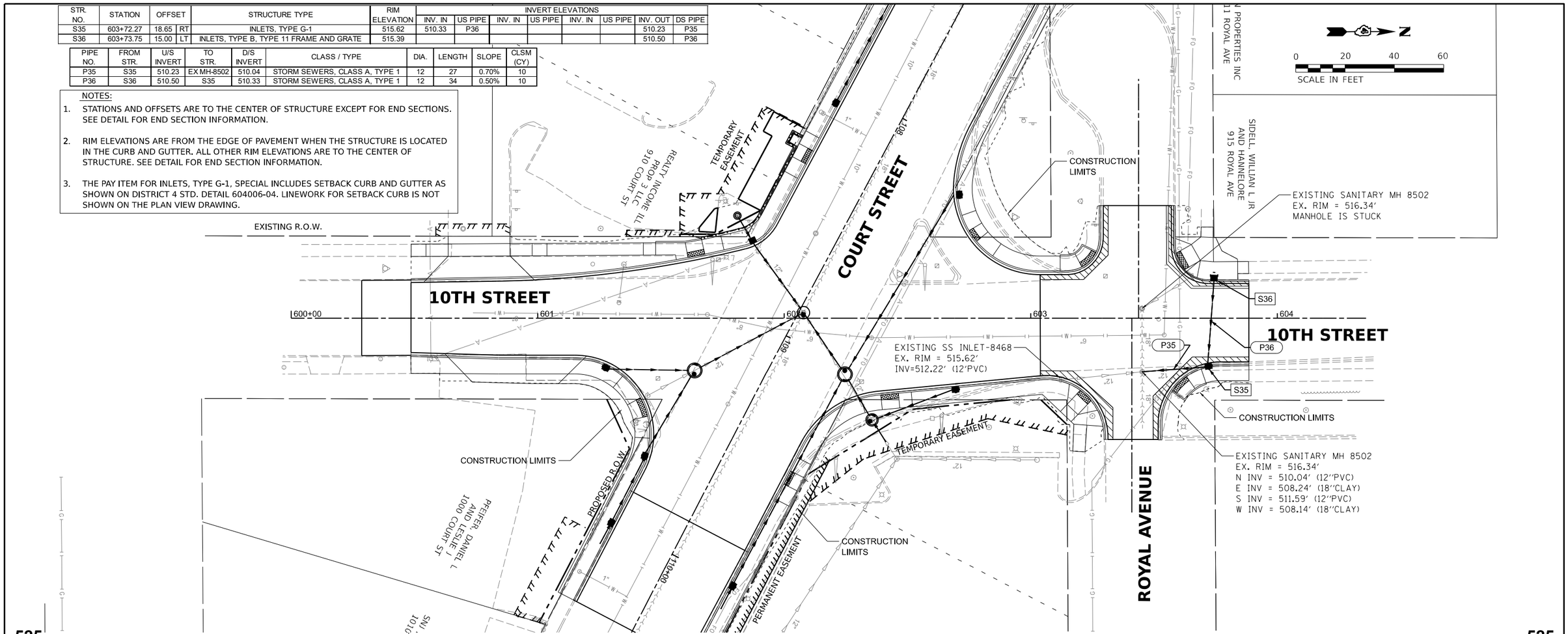

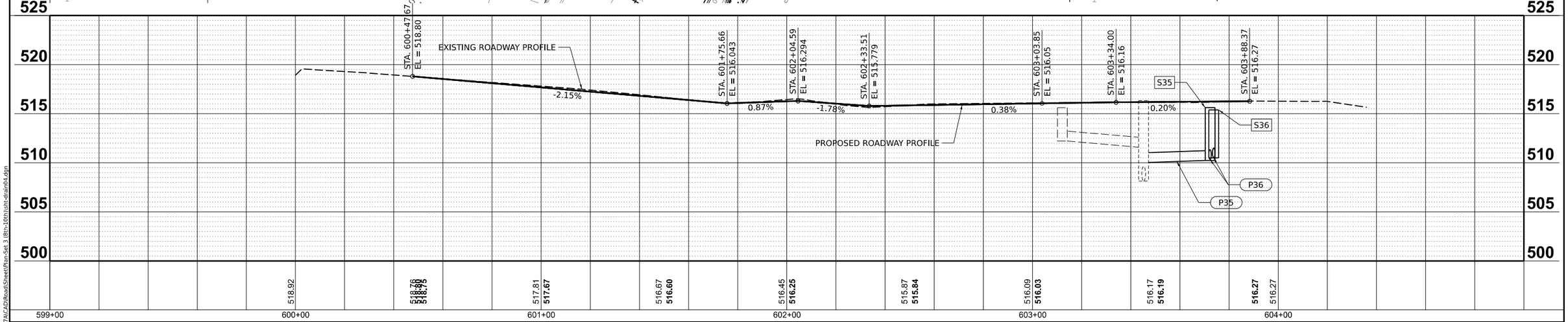

PLAN	BY	DATE
SURVEYED		
PLOTTED		
ALIGNMENT CHECKED		
RT. OF WAY CHECKED		
CADD FILE NAME		
NOTE BOOK NO.		

PROFILE	BY	DATE
SURVEYED		
PLOTTED		
GRADES CHECKED		
B.M. NOTED		
STRUCTURE NOTATNS CH'KD		
NOTE BOOK NO.		

© Copyright Hanson Professional Services Inc. 2025

HANSON
Hanson Professional Services Inc.

DESIGNED	JFC	7/26/2023 12:00:00 AM
DRAWN	RLA	7/26/2023 12:00:00 AM
REVIEWED	MGD	10/25/2024 12:00:00 AM

MODEL: sht-drln04
FILE NAME: I:\13jobs\13L0177A\CAD\Road\Sheet\Plan-Set 3 (8th-10th)\sht-drain04.dgn

Final

USER NAME = ander00846	DESIGNED - DBH	REVISED -	
	DRAWN - RA/CL	REVISED -	
PLOT SCALE = 0.16666667 ' / in.	CHECKED - BAB	REVISED -	
PLOT DATE = 3/26/2025	DATE - 10/25/2024 12:00:00 AM	REVISED -	

STATE OF ILLINOIS
DEPARTMENT OF TRANSPORTATION

10TH STREET
DRAINAGE PLANS

SCALE: 1" = 20' | SHEET OF SHEETS | STA. TO STA.

F.A.P. RTE.	SECTION	COUNTY	TOTAL SHEETS	SHEET NO.
693	20-00196-01-RS	TAZEWELL	136	50
	13L0177A	CONTRACT NO. 89859		
		ILLINOIS	FED. AID PROJECT	

WATER MAIN GENERAL NOTES

1. MINIMUM COVER FROM TOP OF WATER MAIN TO GROUND ELEVATION SHALL BE 42 INCHES.
2. COPPER TRACER WIRE SHALL BE ATTACHED TO THE PROPOSED WATER MAIN AND TERMINATED AT GROUND LEVEL IN THE VALVE BOX AT CONNECTION POINTS.
3. ALL PROPOSED WATER MAIN PIPING JOINTS SHALL BE FIELD LOK GASKETS AND ALL PROPOSED WATER MAIN FITTINGS SHALL EITHER BE FIELD LOK GASKETS FOR PUSH-ON JOINT FITTINGS OR RETAINER GLANDS (MEGA LUGS) FOR MJ FITTINGS. THIS WORK WILL BE CONSIDERED INCLUDED IN THE CONTRACT UNIT PRICE PER FOOT FOR WATER MAIN (SIZE SPECIFIED IN THE PLANS).
4. VALVES SHALL BE MECHANICAL JOINT RESILIENT WEDGE GATE VALVES CONFORMING TO AWWA C509.
5. ALL WATER MAINS SHALL BE PRESSURE AND LEAK TESTED IN ACCORDANCE WITH THE STANDARD SPECIFICATIONS FOR WATER AND SEWER CONSTRUCTION IN ILLINOIS, CURRENT EDITION, AND AWWA C600 AND ILLINOIS AMERICAN WATER (ILAW) STANDARD SPECIFICATIONS.
6. ALL WATER MAIN SYSTEMS AND WATER SERVICES WITHIN TWO FEET LATERALLY OF THE PROPOSED PAVEMENT, DRIVEWAY PAVEMENT, SIDEWALK OR CURB AND GUTTER SHALL BE BACKFILLED WITH SAND ONE FOOT ABOVE PIPE AND THEN CONTROLLED LOW-STRENGTH MATERIAL (CLSM) AS SHOWN ON THE WATER MAIN DETAILS AND IN ACCORDANCE WITH THE SPECIAL PROVISIONS. THE SAND BACKFILL TO ONE FOOT ABOVE PIPE WILL NOT BE PAID FOR SEPARATELY AND WILL BE CONSIDERED INCLUDED IN THE CONTRACT UNIT PRICE PER FOOT FOR WATER MAIN AND WATER SERVICE LINE (SIZE SPECIFIED IN THE PLANS). SEE WATER MAIN DETAILS FOR TRENCH BACKFILL REQUIREMENTS.
7. SEE THE STORM SEWER SHEETS (DRAINAGE PLANS) FOR STORM SEWER INFORMATION.
8. CONTRACTOR TO VERIFY DEPTH OF UTILITIES AND EXISTING WATER MAIN PRIOR TO CONSTRUCTION. WHEN CONNECTIONS ARE TO BE MADE TO EXISTING PIPING AND FITTINGS, THE LOCATION AND ELEVATION OF THE EXISTING PIPING SHALL BE FIELD DETERMINED AND THE APPROPRIATE ADJUSTMENTS MADE.
9. THE EXISTING WATER MAINS TO BE RETIRED WITHIN THE PROJECT LIMITS SHALL BE REMOVED OR ABANDONED IN PLACE. EXPOSED ENDS OF ABANDONED LINES SHALL BE PLUGGED OR CAPPED IN A WATERTIGHT MANNER. ALL RETIRED WATER VALVE BOXES AND DOMESTIC CURB STOP BOXES AND METER PITS SHALL BE REMOVED. THIS WORK WILL BE CONSIDERED INCLUDED IN THE CONTRACT UNIT PRICE LUMP SUM FOR WATER MAIN TO BE ABANDONED.
10. THE WATER MAIN SHALL BE DISINFECTED IN ACCORDANCE WITH SECTION 41-2.15 OF THE STANDARD SPECIFICATIONS FOR WATER AND SEWER CONSTRUCTION IN ILLINOIS. CONTRACTOR WILL OPERATE ANY EXISTING VALVES REQUIRED TO COMPLETE THE FLUSHING, DISINFECTING, AND PRESSURE TESTING. NOTICE MUST BE GIVEN TO ILLINOIS AMERICAN WATER REPRESENTATIVE PRIOR TO BEGINNING THIS PROCESS WHEN CUSTOMERS ARE AFFECTED.
11. A RESIDENT PROJECT REPRESENTATIVE OF ILLINOIS AMERICAN WATER COMPANY WILL BE RESPONSIBLE FOR COLLECTING GPS DATA OF THE PROPOSED IMPROVEMENTS INCLUDING ALL FIRE HYDRANTS, VALVES, CORPORATION STOPS, METER PITS, FITTINGS, DEFLECTION POINTS AND HORIZONTAL ALIGNMENT POINTS AT 100 FOOT MAXIMUM INTERVALS ALONG THE WATER MAIN. THE CONTRACTOR WILL BE RESPONSIBLE FOR COORDINATING AND COOPERATING WITH THE RESIDENT PROJECT REPRESENTATIVE WHILE THEY PERFORM THEIR WORK. WHEN POSSIBLE THIS DATA WILL BE COLLECTED AFTER THE PIPING AND APPURTENANCES ARE INSTALLED, BUT BEFORE THE TRENCH IS BACKFILLED. IF GPS DATA IS NOT COLLECTED WHILE THE TRENCH IS OPEN, THE CONTRACTOR SHALL INSTALL WOOD VERTICAL RISER MARKERS AT EACH BURIED FEATURE OR PROVIDE A MINIMUM OF 3 HORIZONTAL TIES FOR EACH FEATURE WITH WRITTEN DOCUMENTATION SHEETS PROVIDED TO THE REPRESENTATIVE AND ENGINEER. IF WOOD RISERS ARE USED, THEY SHOULD BE PLUMB AND EXTEND TO 2 FEET ABOVE GRADE AND THE TOPS SHOULD BE PAINTED BLUE. THE RISERS SHALL BE MARKED ABOVE GRADE WITH PAINT OR PERMANENT MARKERS TO IDENTIFY THE TYPE OF FEATURE BEING MARKED (I.E. VALVE, 45 DEG. ELBOW, ETC.). ANY COST ASSOCIATED WITH THESE REQUIREMENTS OR FOR DELAYS IN THE PROJECT WILL NOT BE CONSIDERED FOR PAYMENT AND NO ADDITIONAL COMPENSATION WILL BE ALLOWED.
12. THE CONTRACTOR SHALL PLUG THE WATER MAIN AND BACKFILL ALL EXCAVATIONS AT THE END OF EACH WORK DAY.
13. PRIOR TO THE INSTALLATION OF THE PROPOSED WATER MAIN, THE CONTRACTOR SHALL COORDINATE THEIR OPERATIONS WITH ILAW REPRESENTATIVE JOSH HARKEN AT (309)566-4146.
14. THE WATER MAIN WILL BE COMPLETED BETWEEN THE TAPPING VALVES AND SLEEVES AT EACH END OF THE PROJECT. ONCE THIS HAS BEEN COMPLETED AND TESTED, THE PROPOSED SERVICES SHALL BE INSTALLED AND CONNECTED TO THE WATER MAIN. THE CONTRACTOR IS RESPONSIBLE FOR CONNECTION OF ALL SERVICES. THE EXISTING WATER MAIN AND SERVICES ABANDONMENT SHALL THEN BE COORDINATED WITH ILAW AND COMPLETED AS CALLED FOR IN ILAW STANDARD SPECIFICATIONS.
15. THE MAXIMUM ALLOWABLE DEFLECTION AT A JOINT SHALL BE THE LESSER OF THE MANUFACTURER'S RECOMMENDATIONS OR THE ILLINOIS AMERICAN WATER COMPANY TECHNICAL SPECIFICATIONS. DEFLECTION OF PVC PIPE JOINTS AND/OR BENDING OF PVC PIPE LENGTHS ARE NOT PERMITTED.
16. THE WATER MAIN PROFILE IS CUT ALONG THE CENTERLINE OF THE ROAD AND THE WATER MAIN LENGTHS SHOWN IN PROFILE ARE NOT ACCURATE.
17. THE WATER SERVICES SHOWN ARE KNOWN CONNECTIONS. THE CONTRACTOR SHALL COORDINATE WITH ILAW BEFORE SWITCHING SERVICES AND TO VERIFY THERE ARE NO ADDITIONAL SERVICES.
18. EXISTING SERVICES SHALL BE ABANDONED FROM THE CONNECTION TO THE EXISTING 10" MAIN TO THE SERVICE'S EXISTING WATER METER PIT. PROPOSED WATER SERVICES SHALL CONNECT TO LIVE EXISTING SERVICES BETWEEN THE EXISTING METER PIT AND THE STRUCTURE THE EXISTING SERVICE SERVES WITHIN THE RIGHT OF WAY AS DIRECTED BY ILAW.

WATER MAIN STAGE CONSTRUCTION NOTES

1. ILLINOIS AMERICAN WATER CREWS SHALL OPERATE VALVES. CONTRACTOR SHALL CONTACT ILLINOIS AMERICAN WATER AT LEAST 72 HOURS BEFORE NEEDING TO OPERATE AN EXISTING VALVE.
2. TEMPORARY FIRE HYDRANTS, VALVES AND REDUCERS MAY BE REUSED. THESE COSTS WILL BE CONSIDERED INCLUDED IN THE CONTRACT UNIT PRICE LUMP SUM FOR WATER MAIN TO BE ABANDONED.
3. WATER MAIN SHALL BE CONSTRUCTED AT THE SAME TIME AS THE ROADWAY IMPROVEMENTS. SEE TRAFFIC CONTROL PLANS AND SPECIAL PROVISIONS FOR ADDITIONAL INFORMATION.

WATER MAIN SCHEDULE OF QUANTITIES

ITEM NUMBER	ITEM	UNIT	QUANTITY
56100050	DUCTILE IRON WATER MAIN TEE, 12" X 6"	EACH	1
56100055	DUCTILE IRON WATER MAIN TEE, 12" X 8"	EACH	1
56100600	WATER MAIN 6"	FOOT	72
56100700	WATER MAIN 8"	FOOT	21
56100900	WATER MAIN 12"	FOOT	1119
56101162	DUCTILE IRON WATER MAIN REDUCER, 12" X 10"	EACH	2
56105200	WATER VALVES 12"	EACH	1
56108800	TAPPING VALVES AND SLEEVES 6"	EACH	1
56108900	TAPPING VALVES AND SLEEVES 8"	EACH	1
56109000	TAPPING VALVES AND SLEEVES 10"	EACH	2
56109398	DUCTILE IRON WATER MAIN FITTINGS 6" 11.25 DEGREE BEND	EACH	1
56109418	DUCTILE IRON WATER MAIN FITTINGS 6" 45.00 DEGREE BEND	EACH	1
56109420	DUCTILE IRON WATER MAIN FITTINGS 8" 45.00 DEGREE BEND	EACH	4
56109424	DUCTILE IRON WATER MAIN FITTINGS 12" 45.00 DEGREE BEND	EACH	18
56109438	DUCTILE IRON WATER MAIN FITTINGS 12" 90.00 DEGREE BEND	EACH	1
56200300	WATER SERVICE LINE 1"	FOOT	345
56201160	WATER SERVICE LINE 6"	FOOT	61
56400500	FIRE HYDRANTS TO BE REMOVED	EACH	3
56500800	DOMESTIC WATER SERVICE BOXES	EACH	10
59300100	CONTROLLED LOW-STRENGTH MATERIAL	CU YD	275
X2130010	EXPLORATION TRENCH (SPECIAL)	FOOT	24
X5620112	WATER SERVICE CONNECTION	EACH	11
X5640150	FIRE HYDRANT ASSEMBLY COMPLETE	EACH	3
XX000739	CURB STOP AND BOX, 1"	EACH	10
XX008839	WATER MAIN TO BE ABANDONED	L SUM	1

© Copyright Hanson Professional Services Inc. 2025

HANSON
Hanson Professional Services Inc.

DESIGNED LJU 4/1/2024
DRAWN RLA 4/1/2024
REVIEWED CW 10/25/2024 12:00:00 AM

MODEL: sht-waternotes01
FILE NAME: E:\13Jobs\13L0177A\CAD\RoadSheet\Plan-Set 3 (8th-10th)\sht-waternotes01.dgn

Final

USER NAME = ander00846	DESIGNED - LJU	REVISED -	
	DRAWN - RLA	REVISED -	
PLOT SCALE = 0.16666667 ' / in.	CHECKED - CW	REVISED -	
PLOT DATE = 3/26/2025	DATE - 10/25/2024 12:00:00 AM	REVISED -	

STATE OF ILLINOIS
DEPARTMENT OF TRANSPORTATION

COURT STREET
WATER MAIN GENERAL NOTES

SCALE: N/A | SHEET OF SHEETS | STA. TO STA.

F.A.P. RTE.	SECTION	COUNTY	TOTAL SHEETS	SHEET NO.
693	20-00196-01-RS	TAZEWELL	136	51
	13L0177A	CONTRACT NO. 89859		
	ILLINOIS	FED. AID PROJECT		

NOTES:

1. WHERE DISCONNECTION FROM EXISTING WATER MAIN OCCURS FOR A WATER MAIN TO BE ABANDONED, AN 18" MIN. SECTION OF PIPE SHALL BE CUT BETWEEN THE EXISTING MAIN TO REMAIN IN SERVICE AND THE MAIN TO BE ABANDONED. THE EXISTING MAIN REMAINING IN SERVICE SHALL BE CAPPED WITH A MECHANICAL JOINT CAP WITH LOCKING GLANDS. AN 18" MIN. CONCRETE PLUG/BLOCK SHALL BE INSTALLED AND BRACED AGAINST THE EXISTING MAIN TO BE ABANDONED. A WATERTIGHT CAP SHALL BE PLACED ON THE MAIN TO BE ABANDONED.

2. ALL FITTINGS SHALL BE DUCTILE IRON MECHANICAL JOINT. RESTRAIN TWO JOINTS ON EACH SIDE OF EVERY FITTING.

NOTES:

3. RESTRAINED JOINTS SHALL EXTEND A MINIMUM OF 40 LF FROM THE UPPER VERTICAL 45°BENDS WHEN VERTICAL CHANGES ARE MADE ON THE WATER LINE.

4. ALL SERVICES SHALL BE 1" DIAMETER AND HAVE BOTH CURB STOPS AND METER PITS INSTALLED. FINAL LOCATION OF CURB STOPS AND METERS PITS SHALL BE DETERMINED IN FIELD WHERE ALL IMPROVEMENTS REMAIN WITHIN RIGHT OF WAY UNLESS OTHERWISE NOTED. EX. METER WILL BE MOVED FROM EX. METER PIT TO PROPOSED METER PIT IN MOST CASES. ILLINOIS AMERICAN WATER TO DETERMINE WHEN NEW METERS SHALL BE INSTALLED IN THE PROPOSED METER PITS. CONTRACTOR SHALL COORDINATE WITH ILLINOIS AMERICAN WATER FOR ALL SERVICE WORK.

5. STORM PIPE IDENTIFIED AS WMQ IS DESIGNED FOR WATER MAIN QUALITY PIPE WHERE CROSSING OR NEAR THE PROPOSED WATER MAIN. IN THE EVENT WATER MAIN QUALITY PIPE IS NOT USED FOR THE STORM SEWER, THEN A CASING PIPE SHALL ENCASE THE WATER MAIN. REFER TO DRAINAGE PLAN SHEETS FOR ADDITIONAL STORM INFORMATION.

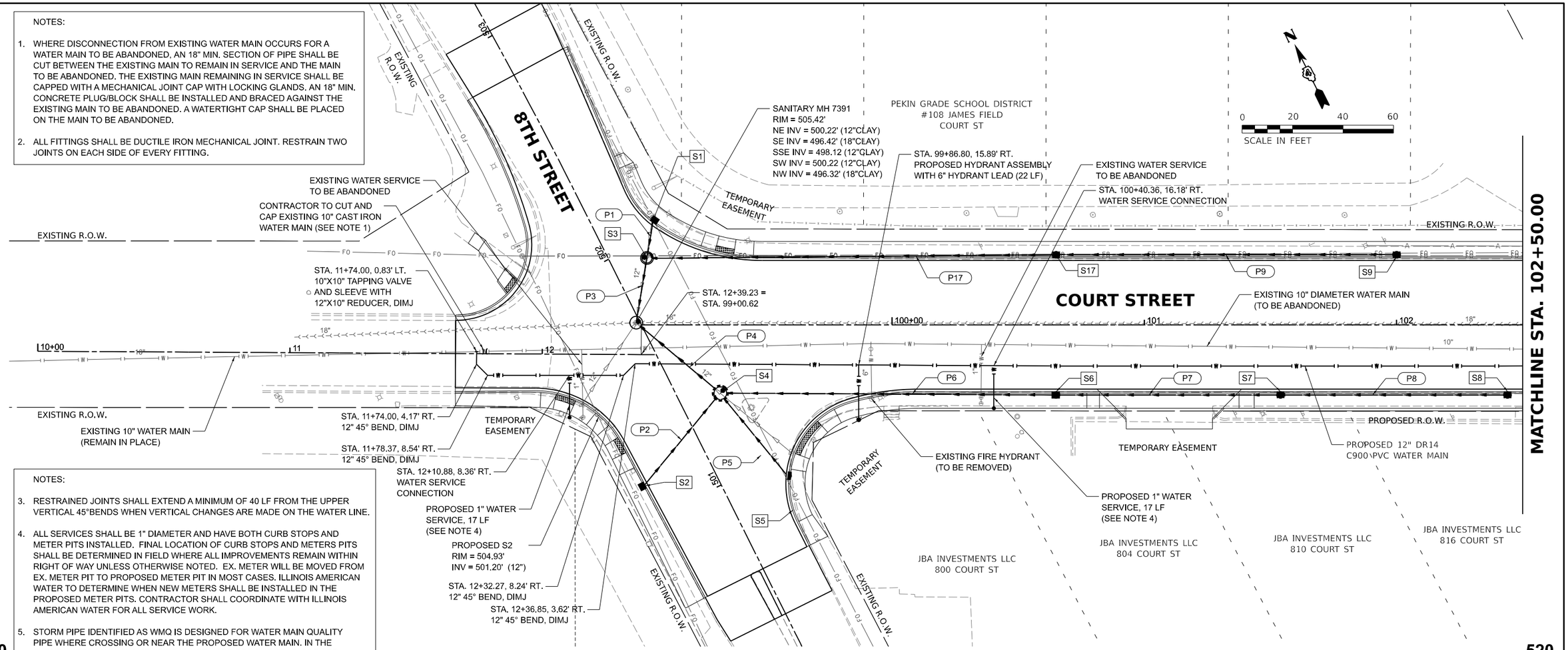

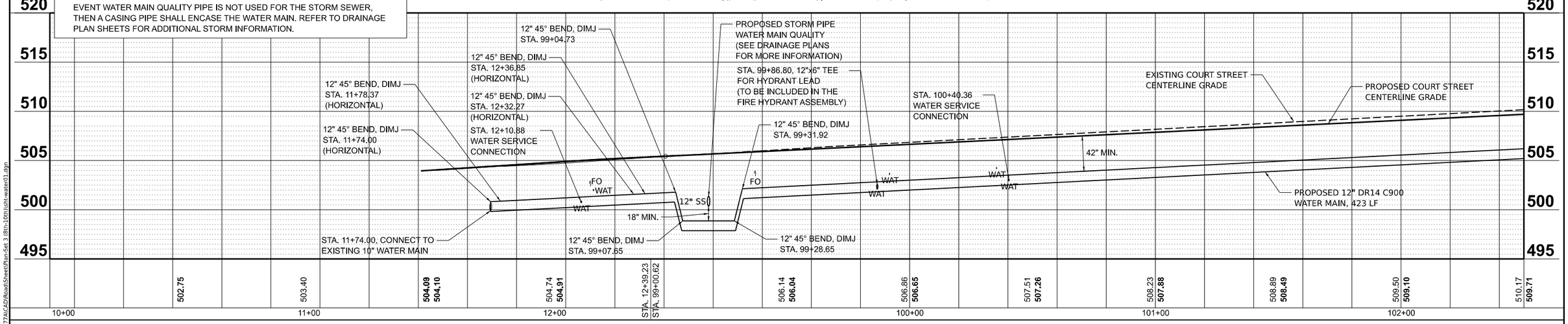

Final	USER NAME = ander00846	DESIGNED - LJU	REVISED -	STATE OF ILLINOIS DEPARTMENT OF TRANSPORTATION	COURT STREET WATER MAIN PLAN AND PROFILES
		DRAWN - RLA	REVISED -		
	PLOT SCALE = 0.16666667 ' / in.	CHECKED - CW	REVISED -		
	PLOT DATE = 3/26/2025	DATE - 10/25/2024 12:00:00 AM	REVISED -		SCALE: 1" = 20' SHEET OF SHEETS STA. TO STA.

F.A.P. RTE.	SECTION	COUNTY	TOTAL SHEETS	SHEET NO.
693	20-00196-01-RS	TAZEWELL	136	52
	13L0177A	CONTRACT NO. 89859		
		ILLINOIS	FED. AID PROJECT	

DESIGNED LJU 4/1/2024
DRAWN RLA 4/1/2024
REVIEWED CW 10/25/2024 12:00:00 AM

MODEL: water01
FILE NAME: I:\13Jobs\13L0177A\CAD\RoadSheet\Plan-Set 3 (8th-10th)\sht-water01.dgn

PLAN — NOTE BOOK NO.____ — SURVEYED ____ PLOTTED ____ ALIGNMENT CHECKED ____ RT. OF WAY CHECKED ____ CADD FILE NAME ____ — BY — DATE

PROFILE — NOTE BOOK NO.____ — SURVEYED ____ PLOTTED ____ GRADES CHECKED ____ B.M. NOTED ____ STRUCTURE NOTAT'NS CH'KD ____ — BY — DATE

© Copyright Hanson Professional Services Inc. 2025
HANSON
Hanson Professional Services Inc.

NOTES:

1. WHERE DISCONNECTION FROM EXISTING WATER MAIN OCCURS FOR A WATER MAIN TO BE ABANDONED, AN 18" MIN. SECTION OF PIPE SHALL BE CUT BETWEEN THE EXISTING MAIN TO REMAIN IN SERVICE AND THE MAIN TO BE ABANDONED. THE EXISTING MAIN REMAINING IN SERVICE SHALL BE CAPPED WITH A MECHANICAL JOINT CAP WITH LOCKING GLANDS. AN 18" MIN. CONCRETE PLUG/BLOCK SHALL BE INSTALLED AND BRACED AGAINST THE EXISTING MAIN TO BE ABANDONED. A WATERTIGHT CAP SHALL BE PLACED ON THE MAIN TO BE ABANDONED.
2. ALL FITTINGS SHALL BE DUCTILE IRON MECHANICAL JOINT. RESTRAIN TWO JOINTS ON EACH SIDE OF EVERY FITTING.
3. RESTRAINED JOINTS SHALL EXTEND A MINIMUM OF 40 LF FROM THE UPPER VERTICAL 45°BENDS WHEN VERTICAL CHANGES ARE MADE ON THE WATER LINE.
4. ALL SERVICES SHALL BE 1" DIAMETER AND HAVE BOTH CURB STOPS AND METER PITS INSTALLED. FINAL LOCATION OF CURB STOPS AND METERS PITS SHALL BE DETERMINED IN FIELD WHERE ALL IMPROVEMENTS REMAIN WITHIN RIGHT OF WAY UNLESS OTHERWISE NOTED. EX. METER WILL BE MOVED FROM EX. METER PIT TO PROPOSED METER PIT IN MOST CASES. ILLINOIS AMERICAN WATER TO DETERMINE WHEN NEW METERS SHALL BE INSTALLED IN THE PROPOSED METER PITS. CONTRACTOR SHALL COORDINATE WITH ILLINOIS AMERICAN WATER FOR ALL SERVICE WORK.

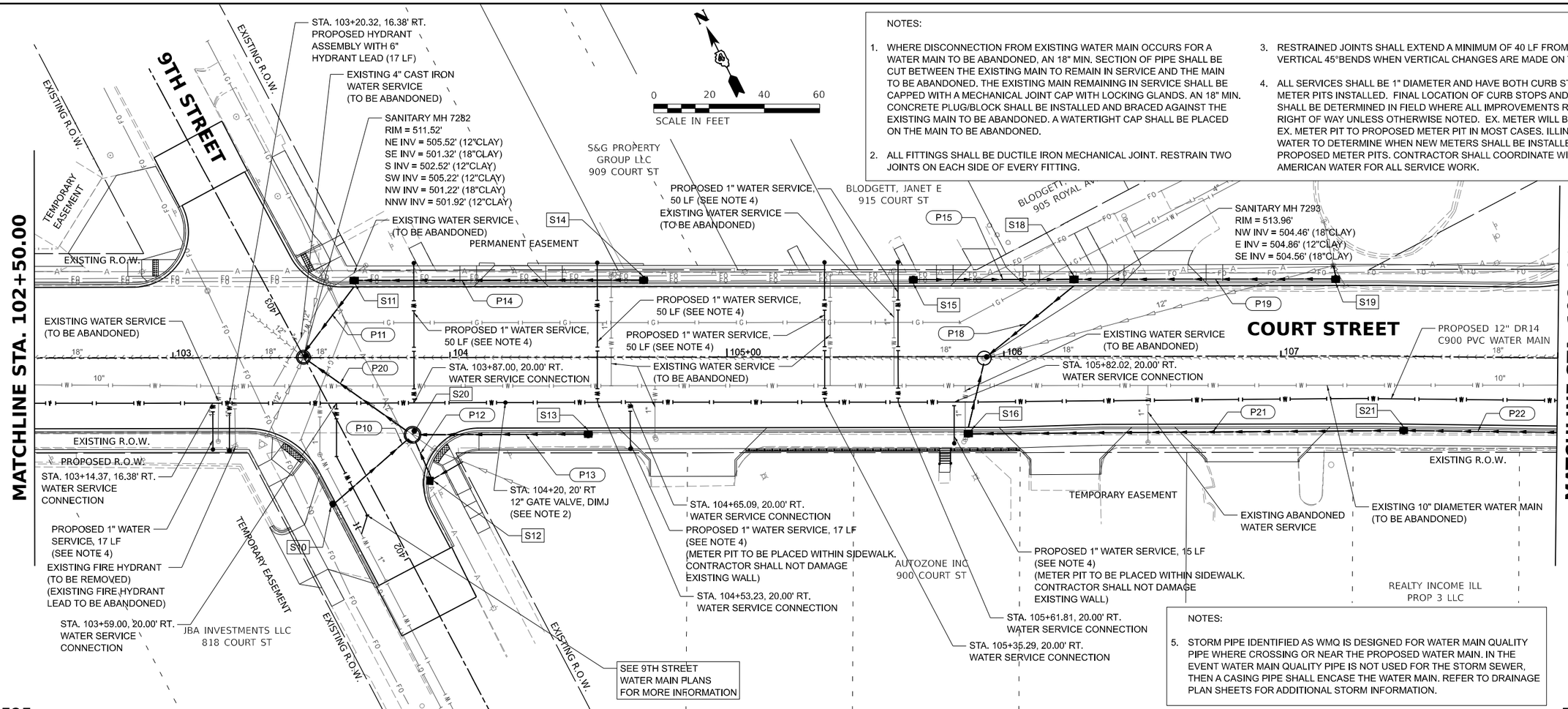

NOTES:

5. STORM PIPE IDENTIFIED AS WMQ IS DESIGNED FOR WATER MAIN QUALITY PIPE WHERE CROSSING OR NEAR THE PROPOSED WATER MAIN. IN THE EVENT WATER MAIN QUALITY PIPE IS NOT USED FOR THE STORM SEWER, THEN A CASING PIPE SHALL ENCASE THE WATER MAIN. REFER TO DRAINAGE PLAN SHEETS FOR ADDITIONAL STORM INFORMATION.

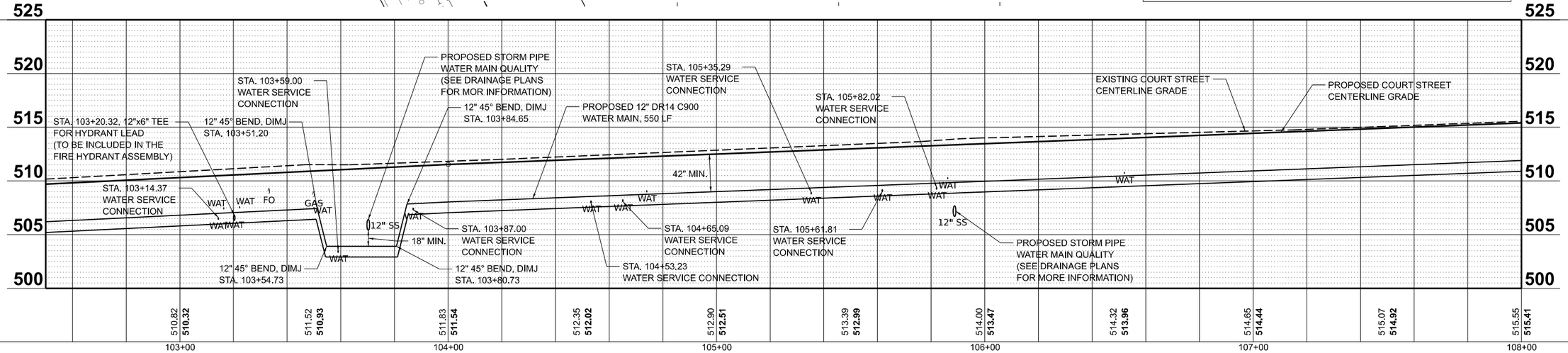

Final	USER NAME = ander00846	DESIGNED - LJU	REVISED -	STATE OF ILLINOIS DEPARTMENT OF TRANSPORTATION	COURT STREET WATER MAIN PLAN AND PROFILES
		DRAWN - RLA	REVISED -		
	PLOT SCALE = 0.16666667 ' / in.	CHECKED - CW	REVISED -		
	PLOT DATE = 3/26/2025	DATE - 10/25/2024 12:00:00 AM	REVISED -		SCALE: 1" = 20' SHEET OF SHEETS STA. TO STA.

F.A.P. RTE.	SECTION	COUNTY	TOTAL SHEETS	SHEET NO.
693	20-00196-01-RS	TAZEWELL	136	53
	13L0177A	CONTRACT NO. 89859		
		ILLINOIS	FED. AID PROJECT	

PLAN	BY	DATE
SURVEYED		
PLOTTED		
ALIGNMENT CHECKED		
RT. OF WAY CHECKED		
CADD FILE NAME		
NOTE BOOK NO.		

PROFILE	BY	DATE
SURVEYED		
PLOTTED		
GRADES CHECKED		
B.M. NOTED		
STRUCTURE NOTAT'NS CH'KD		
NOTE BOOK NO.		

© Copyright Hanson Professional Services Inc. 2025

HANSON
Hanson Professional Services Inc.

DESIGNED	LJU	4/1/2024
DRAWN	RLA	4/1/2024
REVIEWED	CW	10/25/2024 12:00:00 AM

MODEL: water02
FILE NAME: I:\13jobs\13L0177A\CAD\Road\Sheet\Plan-Set 3 (8th-10th)\sht-water02.dgn

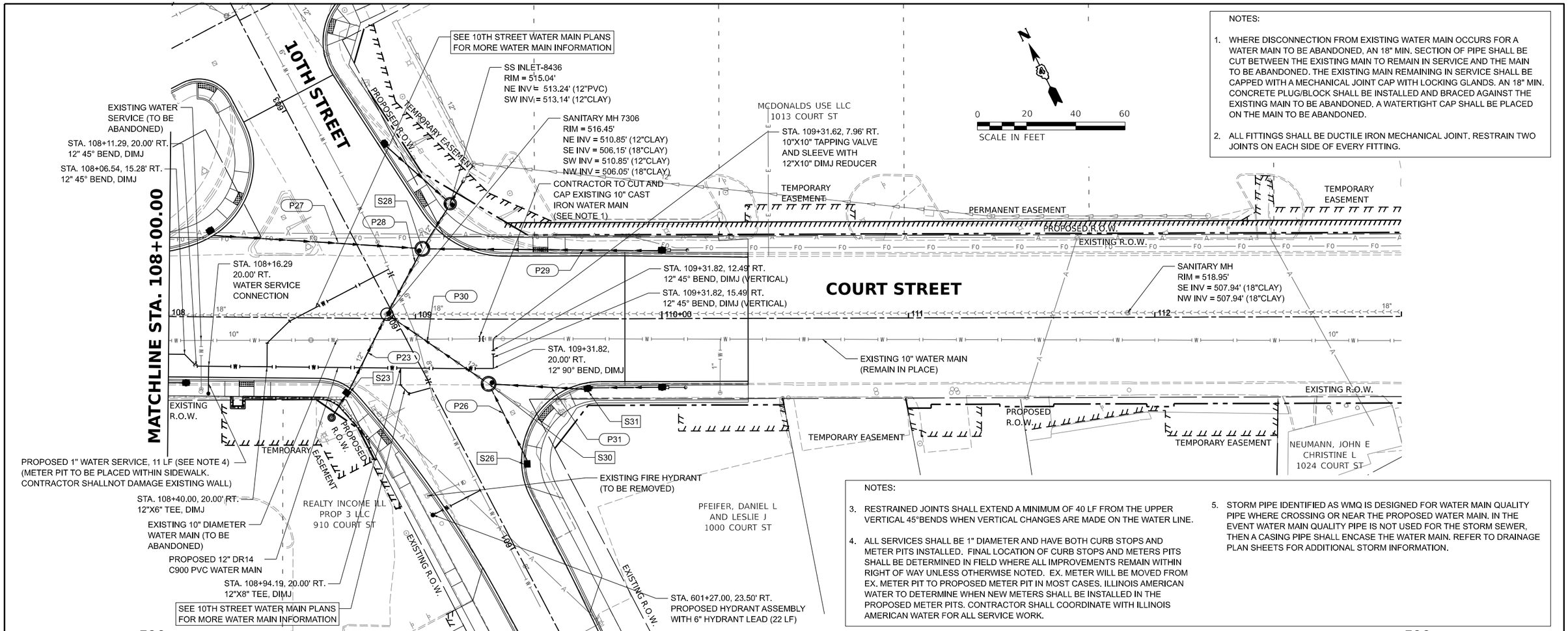

NOTES:

1. WHERE DISCONNECTION FROM EXISTING WATER MAIN OCCURS FOR A WATER MAIN TO BE ABANDONED, AN 18" MIN. SECTION OF PIPE SHALL BE CUT BETWEEN THE EXISTING MAIN TO REMAIN IN SERVICE AND THE MAIN TO BE ABANDONED. THE EXISTING MAIN REMAINING IN SERVICE SHALL BE CAPPED WITH A MECHANICAL JOINT CAP WITH LOCKING GLANDS. AN 18" MIN. CONCRETE PLUG/BLOCK SHALL BE INSTALLED AND BRACED AGAINST THE EXISTING MAIN TO BE ABANDONED. A WATERTIGHT CAP SHALL BE PLACED ON THE MAIN TO BE ABANDONED.

2. ALL FITTINGS SHALL BE DUCTILE IRON MECHANICAL JOINT. RESTRAIN TWO JOINTS ON EACH SIDE OF EVERY FITTING.

NOTES:

3. RESTRAINED JOINTS SHALL EXTEND A MINIMUM OF 40 LF FROM THE UPPER VERTICAL 45°BENDS WHEN VERTICAL CHANGES ARE MADE ON THE WATER LINE.

4. ALL SERVICES SHALL BE 1" DIAMETER AND HAVE BOTH CURB STOPS AND METER PITS INSTALLED. FINAL LOCATION OF CURB STOPS AND METERS PITS SHALL BE DETERMINED IN FIELD WHERE ALL IMPROVEMENTS REMAIN WITHIN RIGHT OF WAY UNLESS OTHERWISE NOTED. EX. METER WILL BE MOVED FROM EX. METER PIT TO PROPOSED METER PIT IN MOST CASES. ILLINOIS AMERICAN WATER TO DETERMINE WHEN NEW METERS SHALL BE INSTALLED IN THE PROPOSED METER PITS. CONTRACTOR SHALL COORDINATE WITH ILLINOIS AMERICAN WATER FOR ALL SERVICE WORK.

5. STORM PIPE IDENTIFIED AS WMQ IS DESIGNED FOR WATER MAIN QUALITY PIPE WHERE CROSSING OR NEAR THE PROPOSED WATER MAIN. IN THE EVENT WATER MAIN QUALITY PIPE IS NOT USED FOR THE STORM SEWER, THEN A CASING PIPE SHALL ENCASE THE WATER MAIN. REFER TO DRAINAGE PLAN SHEETS FOR ADDITIONAL STORM INFORMATION.

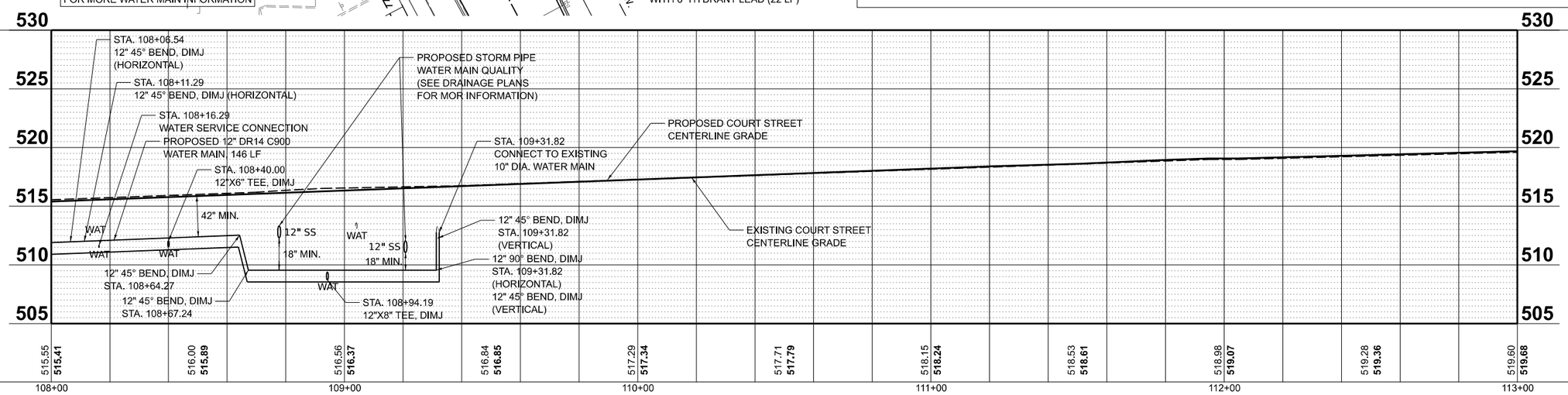

PLAN	BY	DATE
SURVEYED		
PLOTTED		
ALIGNMENT CHECKED		
RT. OF WAY CHECKED		
CADD FILE NAME		
NOTE BOOK NO.		

PROFILE	BY	DATE
SURVEYED		
PLOTTED		
GRADES CHECKED		
B.M. NOTED		
STRUCTURE NOTAT'NS CH'KD		
NOTE BOOK NO.		

© Copyright Hanson Professional Services Inc. 2025

HANSON
Hanson Professional Services Inc.

DESIGNED	LJU	4/1/2024
DRAWN	RLA	4/1/2024
REVIEWED	CW	10/25/2024 12:00:00 AM

MODEL: water03
FILE NAME: I:\13jobs\13L0177A\CAD\Road\Sheet\Plan-Set 3 (8th-10th)\sht-water03.dgn

Final

USER NAME = ander00846	DESIGNED - LJU	REVISED -	STATE OF ILLINOIS DEPARTMENT OF TRANSPORTATION	COURT STREET WATER MAIN PLAN AND PROFILES	
	DRAWN - RLA	REVISED -			
PLOT SCALE = 0.16666667 ' / in.	CHECKED - CW	REVISED -			
PLOT DATE = 3/26/2025	DATE - 10/25/2024 12:00:00 AM	REVISED -		SCALE: 1" = 20' SHEET OF SHEETS STA. TO STA.	

F.A.P. RTE.	SECTION	COUNTY	TOTAL SHEETS	SHEET NO.
693	20-00196-01-RS	TAZEWELL	136	54
	13L0177A	CONTRACT NO. 89859		
		ILLINOIS	FED. AID PROJECT	

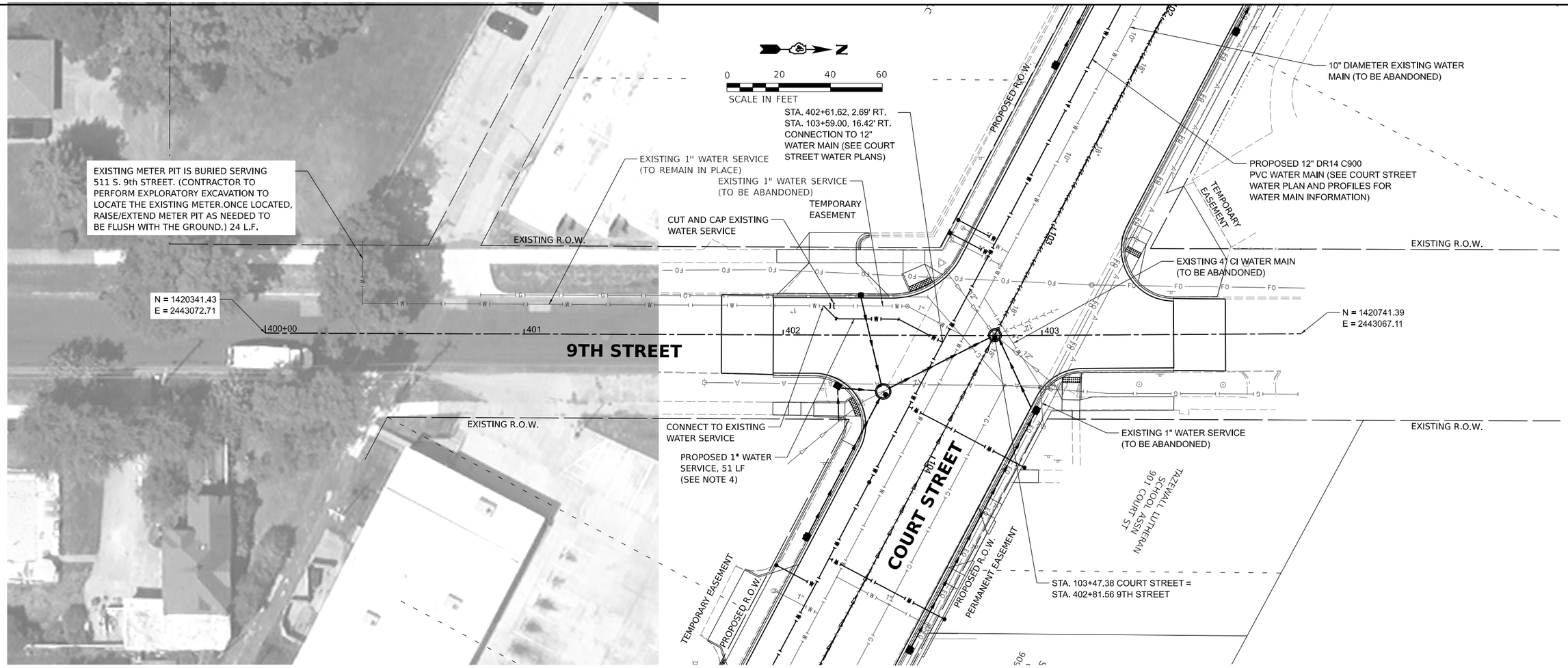

NOTES:

1. WHERE DISCONNECTION FROM EXISTING WATER MAIN OCCURS FOR A WATER MAIN TO BE ABANDONED, AN 18" MIN. SECTION OF PIPE SHALL BE CUT BETWEEN THE EXISTING MAIN TO REMAIN IN SERVICE AND THE MAIN TO BE ABANDONED. THE EXISTING MAIN REMAINING IN SERVICE SHALL BE CAPPED WITH A MECHANICAL JOINT CAP WITH LOCKING GLANDS. AN 18" MIN. CONCRETE PLUG/BLOCK SHALL BE INSTALLED AND BRACED AGAINST THE EXISTING MAIN TO BE ABANDONED. A WATERTIGHT CAP SHALL BE PLACED ON THE MAIN TO BE ABANDONED.

2. ALL FITTINGS SHALL BE DUCTILE IRON MECHANICAL JOINT. RESTRAIN TWO JOINTS ON EACH SIDE OF EVERY FITTING.

3. RESTRAINED JOINTS SHALL EXTEND A MINIMUM OF 40 LF FROM THE UPPER VERTICAL 45°BENDS WHEN VERTICAL CHANGES ARE MADE ON THE WATER LINE.

4. ALL SERVICES SHALL BE 1" DIAMETER AND HAVE BOTH CURB STOPS AND METER PITS INSTALLED. FINAL LOCATION OF CURB STOPS AND METER PITS SHALL BE DETERMINED IN FIELD WHERE ALL IMPROVEMENTS REMAIN WITHIN RIGHT OF WAY UNLESS OTHERWISE NOTED. EX. METER WILL BE MOVED FROM EX. METER PIT TO PROPOSED METER PIT IN MOST CASES. ILLINOIS AMERICAN WATER TO DETERMINE WHEN NEW METERS SHALL BE INSTALLED IN THE PROPOSED METER PITS. CONTRACTOR SHALL COORDINATE WITH ILLINOIS AMERICAN WATER FOR ALL SERVICE WORK.

5. THE 4" DIAMETER WATER MAIN RUNS PARALLEL TO AN EXISTING SANITARY SEWER MAIN WITHIN 10 FT. OF THE EXISTING SANITARY SEWER. THE WATER MAIN INVERT SHALL BE 1.5 FT. HIGHER THAN THE CROWN OF THE SANITARY SEWER WHERE WITHIN 10 FT. HORIZONTALLY TO THE SANITARY SEWER.

6. STORM PIPE IDENTIFIED AS WMQ IS DESIGNED FOR WATER MAIN QUALITY PIPE WHERE CROSSING OR NEAR THE PROPOSED WATER MAIN. IN THE EVENT WATER MAIN QUALITY PIPE IS NOT USED FOR THE STORM SEWER, THEN A CASING PIPE SHALL ENCASE THE WATER MAIN. REFER TO DRAINAGE PLAN SHEETS FOR ADDITIONAL STORM INFORMATION.

7. CONTRACTOR SHALL PUSH THE 1" WATER SERVICE UNDER THE NEW EXISTING SOUTH IMPROVEMENTS (PAVEMENT, CURB AND GUTTER, SIDEWALK) OF 9TH STREET. THIS WORK SHALL BE PER ILAW STANDARD SPECIFICATION SECTION 02450 - HORIZONTAL DIRECTION DRILLING (HDD). ANY DAMAGE BESIDES THE WORK SHOWN ON THE PLAN TO THE NORTH SIDE EXISTING IMPROVEMENTS SHALL BE CORRECTED PER THE CITY'S DIRECTION AT THE CONTRACTOR'S EXPENSE. PUSHING OPERATIONS SHALL BE COORDINATED WITH ILLINOIS AMERICAN WATER PRIOR TO CONSTRUCTION.

© Copyright Hanson Professional Services Inc. 2025
HANSON
Hanson Professional Services Inc.

DESIGNED	LJU	4/1/2024
DRAWN	RLA	4/1/2024
REVIEWED	CW	10/25/2024 12:00:00 AM

MODEL: sht-water05
FILE NAME: k:\13jobs\13L0177A\CAD\Road\Sheet\Plan-Set 3 (8th-10th)\sht-water04.dgn

Final

USER NAME = ander00846	DESIGNED - LJU	REVISED -	
	DRAWN - RLA	REVISED -	
PLOT SCALE = 0.16666667 ' / in.	CHECKED - CW	REVISED -	
PLOT DATE = 3/26/2025	DATE - 10/25/2024 12:00:00 AM	REVISED -	

STATE OF ILLINOIS
DEPARTMENT OF TRANSPORTATION

9TH STREET
WATER MAIN PLAN AND PROFILES

SCALE: 1" = 20' | SHEET OF SHEETS | STA. TO STA.

F.A.P. RTE.	SECTION	COUNTY	TOTAL SHEETS	SHEET NO.
693	20-00196-01-RS	TAZEWELL	136	55
	13L0177A	CONTRACT NO. 89859		
	ILLINOIS	FED. AID PROJECT		

© 2025 Microsoft Corporation © 2025 Maxar ©CNES (2025) Distribution Airbus DS

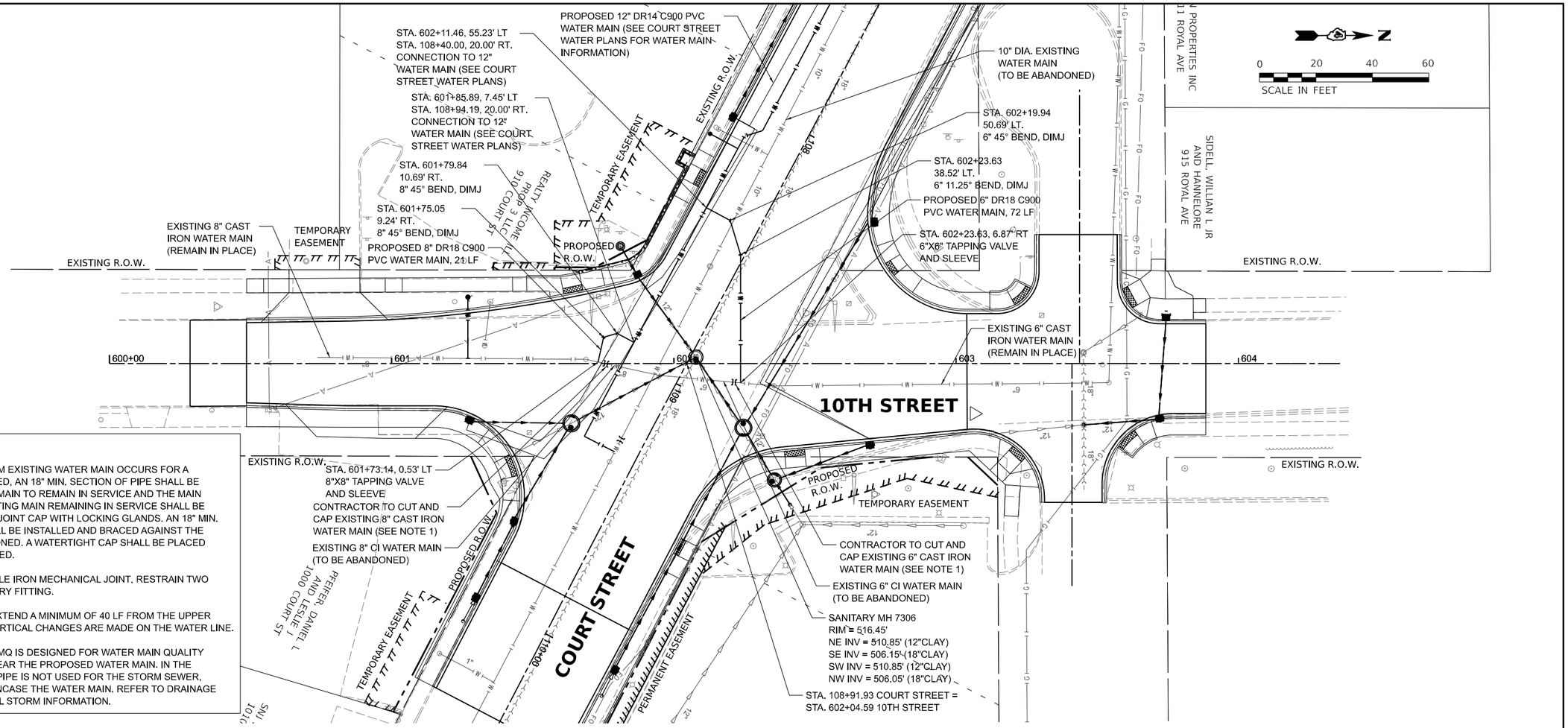

NOTES:

1. WHERE DISCONNECTION FROM EXISTING WATER MAIN OCCURS FOR A WATER MAIN TO BE ABANDONED, AN 18" MIN. SECTION OF PIPE SHALL BE CUT BETWEEN THE EXISTING MAIN TO REMAIN IN SERVICE AND THE MAIN TO BE ABANDONED. THE EXISTING MAIN REMAINING IN SERVICE SHALL BE CAPPED WITH A MECHANICAL JOINT CAP WITH LOCKING GLANDS. AN 18" MIN. CONCRETE PLUG/BLOCK SHALL BE INSTALLED AND BRACED AGAINST THE EXISTING MAIN TO BE ABANDONED. A WATERTIGHT CAP SHALL BE PLACED ON THE MAIN TO BE ABANDONED.

2. ALL FITTINGS SHALL BE DUCTILE IRON MECHANICAL JOINT. RESTRAIN TWO JOINTS ON EACH SIDE OF EVERY FITTING.

3. RESTRAINED JOINTS SHALL EXTEND A MINIMUM OF 40 LF FROM THE UPPER VERTICAL 45°BENDS WHEN VERTICAL CHANGES ARE MADE ON THE WATER LINE.

4. STORM PIPE IDENTIFIED AS WMQ IS DESIGNED FOR WATER MAIN QUALITY PIPE WHERE CROSSING OR NEAR THE PROPOSED WATER MAIN. IN THE EVENT WATER MAIN QUALITY PIPE IS NOT USED FOR THE STORM SEWER, THEN A CASING PIPE SHALL ENCASE THE WATER MAIN. REFER TO DRAINAGE PLAN SHEETS FOR ADDITIONAL STORM INFORMATION.

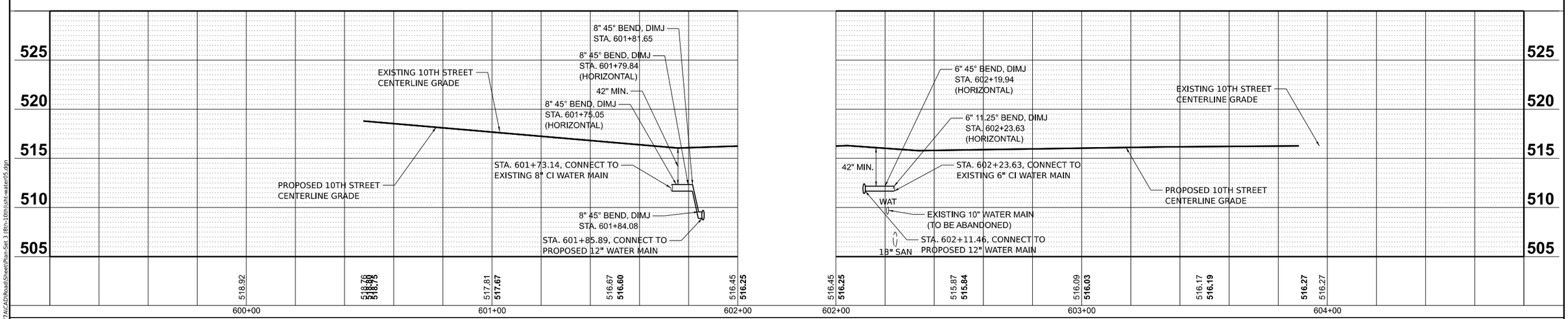

PLAN	BY	DATE
SURVEYED		
PLOTTED		
ALIGNMENT CHECKED		
RT. OF WAY CHECKED		
CADD FILE NAME		
NOTE BOOK NO.		

PROFILE	BY	DATE
SURVEYED		
PLOTTED		
GRADES CHECKED		
B.M. NOTED		
STRUCTURE NOTAT'NS CH'KD		
NOTE BOOK NO.		

© Copyright Hanson Professional Services Inc. 2025

HANSON
Hanson Professional Services Inc.

DESIGNED	LJU	4/1/2024
DRAWN	RLA	4/1/2024
REVIEWED	CW	10/25/2024 12:00:00 AM

MODEL: sht-water04
FILE NAME: I:\13Jobs\13L0177A\CAD\Road\Sheet\Plan-Set 3 (8th-10th)\sht-water05.dgn

Final

USER NAME = ander00846	DESIGNED - LJU	REVISED -	
	DRAWN - RLA	REVISED -	
PLOT SCALE = 0.16666667 ' / in.	CHECKED - CW	REVISED -	
PLOT DATE = 3/26/2025	DATE - 10/25/2024 12:00:00 AM	REVISED -	

STATE OF ILLINOIS
DEPARTMENT OF TRANSPORTATION

10TH STREET
WATER MAIN PLAN AND PROFILES

SCALE: 1" = 20' | SHEET OF SHEETS | STA. TO STA.

F.A.P. RTE.	SECTION	COUNTY	TOTAL SHEETS	SHEET NO.
693	20-00196-01-RS	TAZEWELL	136	56
	13L0177A	CONTRACT NO. 89859		
		ILLINOIS	FED. AID PROJECT	

INSTALLATION OF POLYWRAP

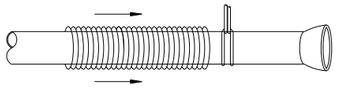

STEP-1

CLEAN ALL DIRT, CINDERS, ETC., FROM THE SURFACE OF THE PIPE. CUT POLYETHYLENE TWO (2) FEET LONGER THAN THE PIPE. SLIP POLYETHYLENE OVER SPIGOT END AND BUNCH AS AS SHOWN ABOVE.

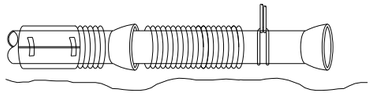

STEP-2

DIG BELL HOLES AT JOINT LOCATIONS, LOWER PIPE INTO TRENCH AND MAKE UP JOINT.

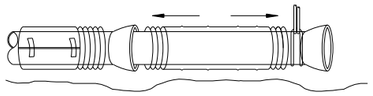

STEP-3

MOVE CABLE HOIST TO BELL END OF PIPE AND LIFT ENOUGH TO SLIP POLYETHYLENE ALONG PIPE AS SHOWN ABOVE.

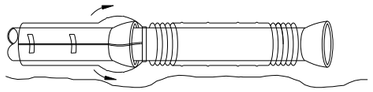

STEP-4

PULL POLYETHYLENE FORWARD FROM PREVIOUS JOINT OVER THE BELL AND SECURE IN PLACE AS SHOWN.

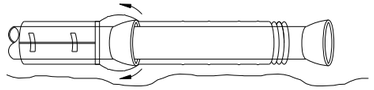

STEP-5

PULL POLYETHYLENE FORWARD FROM PREVIOUS JOINT OVER THE BELL AND SECURE IN PLACE AS SHOWN.

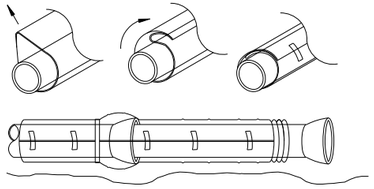

STEP-6

TAKE UP SLACK IN THE TUBE ALONG THE PIPE BARREL, MAKING A SNUG BUT NOT TIGHT FIT. FOLD OVER ON TOP OF PIPE AND SECURE IN PLACE ABOUT EVERY THREE (3) FEET AS SHOWN.

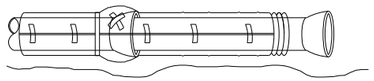

STEP-7

MAKE SURE ANY TEARS IN THE POLYETHYLENE ARE REPAIRED WITH TAPE OR ANOTHER PIECE OF POLY-ETHYLENE SECURED OVER THE DAMAGED AREA.

STEP-8

BACKFILL THE TRENCH ACCORDING TO SPECIFICATIONS, BEING CAREFUL NOT TO DAMAGE THE POLYETHYLENE WHILE TAMPING AROUND PIPE. BACKFILL SHOULD NOT CONTAIN MATERIAL THAT MIGHT DAMAGE THE POLYETHYLENE.

TAPPING POLYWRAPPED PIPE

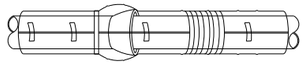

STEP-1

WRAP TWO OR THREE LAYERS OF TAPE COMPLETELY AROUND THE PIPE WHERE THE TAPPING MACHINE WILL BE PLACED.

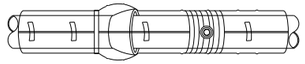

STEP-2

MOUNT THE TAPPING MACHINE ON THE TAPED AREA ANDMAKE THE TAP DIRECTLY THROUGH THE TAPE AND POLYWRAP. INSTALL CORPORATION STOP.

STEP-3

INSPECT THE ENTIRE AREA FOR DAMAGE AND REPAIR IF NECESSARY.

STEP-4

WRAP ANY CONNECTED COPPER SERVICE LINE WITHIN THREE (3) FEET OF THE PIPE WITH POLYETHYLENE.

STEP-5

BACKFILL THE TRENCH ACCORDING TO SPECIFICATIONS, BEING CAREFUL NOT TO DAMAGE THE POLYETHYLENE WHILE TAMPING AROUND PIPE. BACKFILL SHOULD NOT CONTAIN MATERIAL THAT MIGHT DAMAGE THE POLYETHYLENE.

AMERICAN WATER STANDARD
CIVIL
POLYWRAP INSTALLATION
AND TAPPING - DETAIL

ILLINOIS AMERICAN WATER
BELLEVILLE, IL 62223

ILLINOIS AMERICAN WATER ENG.
100 N. WATER WORKS DRIVE
BELLEVILLE, IL 62223

DRAWN BY JWM
PROJECT ENG'R
APPROVED
DATE 06-05-08
PROJECT IP
USE DIMENSIONS ONLY
SCALE N.T.S.

AMERICAN WATER

USE APPROVED DRAWINGS ONLY FOR CONSTRUCTION PURPOSES

0201-0601-IH23

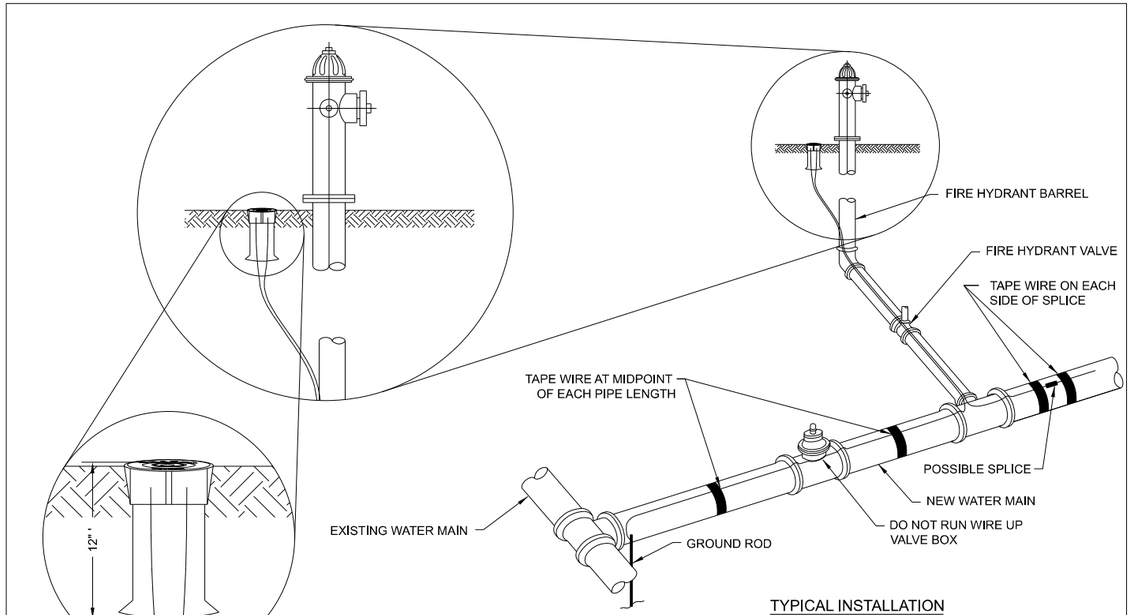

TRACER WIRE ACCESS BOX

TYPICAL INSTALLATION

NOTES:
1. EXTEND TRACER WIRE UP FIRE HYDRANT BARREL TO INTERNAL TERMINALS OF TRACER WIRE STATION AND BACK DOWN.
2. CLAMP TRACER WIRE TO GROUND ROD AT SYSTEM TERMINATION POINTS.

AMERICAN WATER STANDARD
CIVIL
TRACER SYSTEM
DETAIL

ILLINOIS AMERICAN WATER
BELLEVILLE, IL 62223

ILLINOIS AMERICAN WATER ENG.
100 N. WATER WORKS DRIVE
BELLEVILLE, IL 62223

DRAWN BY JWM
PROJECT ENG'R
APPROVED
DATE 08-01-03
PROJECT IP
USE DIMENSIONS ONLY
SCALE N.T.S.

AMERICAN WATER

USE APPROVED DRAWINGS ONLY FOR CONSTRUCTION PURPOSES

0201-0601-IH22

© Copyright Hanson Professional Services Inc. 2025

HANSON
Hanson Professional Services Inc.

DESIGNED	LJU	4/1/2024
DRAWN	RLA	4/1/2024
REVIEWED	CW	10/25/2024 12:00:00 AM

MODEL: sht-watdetail01
FILE NAME: I:\13jobs\13L0177A\CAD\RoadSheet\Plan-Set 3 (8th-10th)\sht-watdetail01.dgn

Final

USER NAME = ander00846	DESIGNED - LJU	REVISED -	
	DRAWN - RLA	REVISED -	
PLOT SCALE = 0.16666667 ' / in.	CHECKED - CW	REVISED -	
PLOT DATE = 3/26/2025	DATE - 10/25/2024 12:00:00 AM	REVISED -	

STATE OF ILLINOIS
DEPARTMENT OF TRANSPORTATION

COURT STREET
WATER MAIN DETAILS

SCALE: 1" = 5' | SHEET OF SHEETS | STA. TO STA.

F.A.P. RTE.	SECTION	COUNTY	TOTAL SHEETS	SHEET NO.
693	20-00196-01-RS	TAZEWELL	136	57
	13L0177A	CONTRACT NO. 89859		
	ILLINOIS	FED. AID PROJECT		

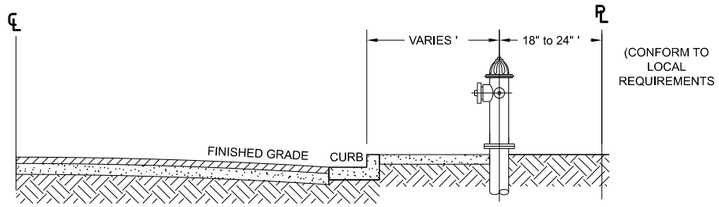

CASE 1 WHEN SIDEWALKS ARE ADJACENT TO CURB, HYDRANTS SHALL BE CENTERED AT BACK OF SIDEWALK.

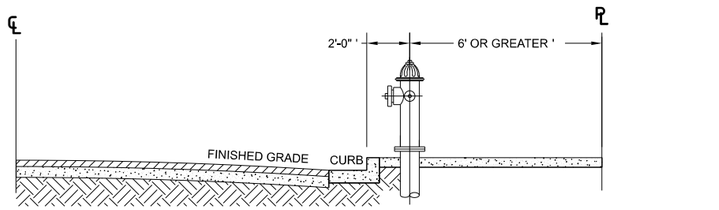

CASE 2 WHEN SIDEWALKS ARE CONSTRUCTED WITH WIDTHS GREATER THAN 6' FROM CURB FACE TO OUTSIDE EDGE OF SIDEWALK, HYDRANTS SHALL BE PLACED 24" FROM THE CURB FACE.

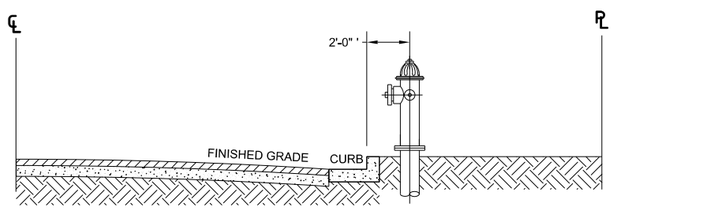

CASE 3 WHEN INVERTED SHOULDER SECTIONIS PERMITTED AND CURB, GUTTER AND SIDEWALKS ARE WAVED, THE HYDRANT SHALL BE CENTERED 24" BEHIND THE EDGE OF PAVEMENT.

NOTES:
1. REQUIREMENTS OF LOCAL AUTHORITY HAVING JURISDICTION SHALL PREVAIL. IN THEIR ABSENCE, THE INSTALLATIONS SHOWN MAY BE USED.
2. EXACT HYDRANT LOCATION TO BE FIELD DETERMINED BY LOCAL AUTHORITY HAVING JURISDICTION.

AMERICAN WATER STANDARD
CIVIL
FIRE HYDRANT LOCATION DETAIL

ILLINOIS AMERICAN WATER
BELLEVILLE, IL 62223

ILLINOIS AMERICAN WATER ENG.
100 N. WATER WORKS DRIVE
BELLEVILLE, IL 62223

DRAWN BY JWM
PROJECT ENG'R
APPROVED
DATE 10-03-07
PROJECT IP
USE DIMENSIONS ONLY
SCALE N.T.S.

AMERICAN WATER

USE APPROVED DRAWINGS ONLY FOR CONSTRUCTION PURPOSES

0201-0601-IH12

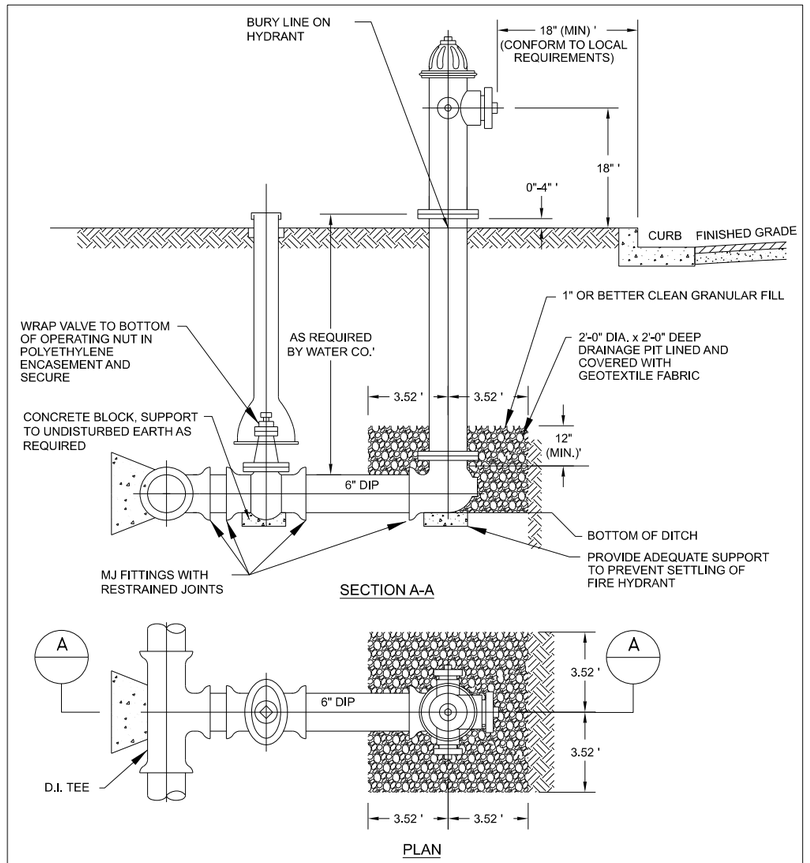

FIRE HYDRANT DETAIL-STANDARD
N.T.S.

NOTES:
1. CONTRACTOR TO SUBMIT RESTRAINED DESIGN.
2. PAINT HYDRANT TO BURY LINE (AND CAN BE DONE PRIOR TO INSTALLATION)
3. APPLY TOUCH UP PAINT AS REQUIRED AFTER INSTALLATION.
4. OPTION IS TO USE DI MJ SWIVEL TEE TO CONNECT DIRECTLY TO MJ 6" HYDRANT VALVE.
5. DI TEE AND VALVE CAN BE REPLACED WITH A TAPPING SLEEVE AND VALVE.
6. THE USE OF AN ANCHOR TEE IS ACCEPTABLE.

06-22-09
ADDED NOTES 5. AND 6.

AMERICAN WATER STANDARD
CIVIL
DRY BARREL FIRE HYDRANT DETAIL

AMERICAN WATER
VOORHEES, NJ 08043

AMERICAN WATER ENGINEERING
3500 CHURCH ROAD
MOUNT LAUREL, NJ 08054

DRAWN BY RJB
PROJECT ENG'R
APPROVED
DATE 06-25-08
PROJECT IP
USE DIMENSIONS ONLY
SCALE N.T.S.

AMERICAN WATER

USE APPROVED DRAWINGS ONLY FOR CONSTRUCTION PURPOSES

0201-0601-SD31

© Copyright Hanson Professional Services Inc. 2025

HANSON
Hanson Professional Services Inc.

DESIGNED	LJU	4/1/2024
DRAWN	RLA	4/1/2024
REVIEWED	CW	10/25/2024 12:00:00 AM

MODEL: sht-waterdetail02
FILE NAME: h:\1jobs\13L0177A\CADrRoad\Sheet\Plan-Set 3 (8th-10th)\sht-waterdet02.dgn

Final	USER NAME = ander00846	DESIGNED - LJU	REVISED -	STATE OF ILLINOIS DEPARTMENT OF TRANSPORTATION
		DRAWN - RLA	REVISED -	
	PLOT SCALE = 0.16666667 ' / in.	CHECKED - CW	REVISED -	
	PLOT DATE = 3/26/2025	DATE - 10/25/2024 12:00:00 AM	REVISED -	

COURT STREET
WATER MAIN DETAILS

SCALE: 1" = 5' | SHEET OF SHEETS | STA. TO STA.

F.A.P. RTE.	SECTION	COUNTY	TOTAL SHEETS	SHEET NO.
693	20-00196-01-RS	TAZEWELL	136	58
	13L0177A	CONTRACT NO. 89859		
		ILLINOIS	FED. AID PROJECT	

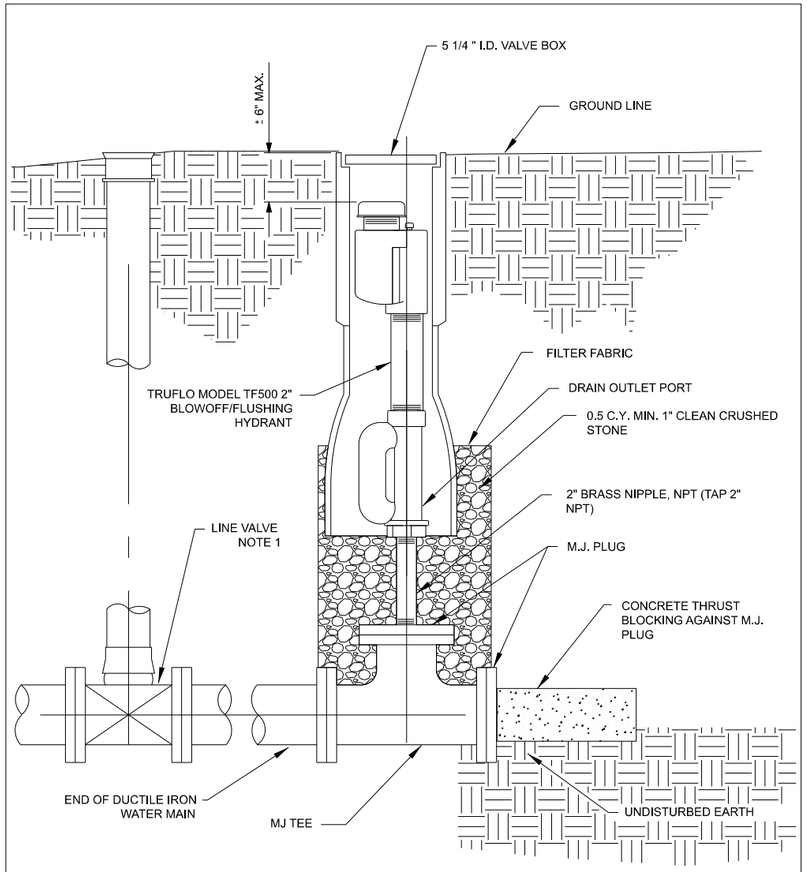

NOTES:
1. LINE VALVE REQUIRES TWO (2) LENGHTS PIOR TO BLOWOFF.

AMERICAN WATER STANDARD
CIVIL
PERMANENT BLOWOFF ASSEMBLY DETAIL

AMERICAN WATER
BELLEVILLE, IL 62223

ILLINOIS AMERICAN WATER ENG.
100 N. WATER WORKS DRIVE
BELLEVILLE, IL 62223

DRAWN BY JWM
PROJECT ENG'R
APPROVED
DATE 01-05-01
PROJECT IP
USE DIMENSIONS ONLY
SCALE N.T.S.

AMERICAN WATER

USE APPROVED DRAWINGS ONLY FOR CONSTRUCTION PURPOSES

0201-0601-IH18

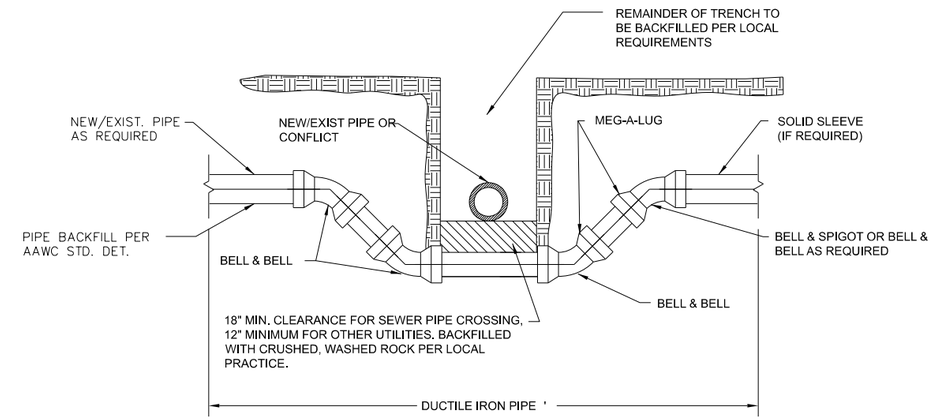

NOTES:
1. ALL PIPE TO BE JOINT RESTRAINED.
2. PIPE IS TO BE DUCTILE IRON, MINIMUM PRESSURE CLASS 350.
3. ALL DUCTILE IRON PIPE SHALL BE POLYETHYLENE WRAPPED FOR THE ENTIRE LENGTH.
4. BEGIN/END RESTRAINED JOINT STATIONING TO BE SHOWN ON THE APPROVED CONSTRUCTION DRAWINGS. ALL BENDS & FITTINGS SHALL HAVE STATIONING AND ELEVATION SHOWN ON THE APPROVED CONSTRUCTION DRAWINGS. THE BOTTOM ELEVATION OF THE CONFLICT AND THE TOP ELEVATION OF THE DUCTILE IRON PIPE AT THE CENTERLINE OF THE CONFLICT SHALL BE SHOWN ON THE APPROVED CONSTRUCTION DRAWINGS.
5. SEPARATION REQUIREMENTS SHALL BE FOLLOWED WITH REGARD TO CONFLICT PIPE.

LEGEND:

RESTRAINED JOINT

REVISIONS
06-22-09
ADDED NOTE 5.

AMERICAN WATER STANDARD
CIVIL
VERTICAL REALIGNMENT OF WATER MAINS DETAIL

AMERICAN WATER
VOORHEES, NJ 08043

AMERICAN WATER ENGINEERING
3906 CHURCH ROAD
MOUNT LAUREL, NJ 08054

DRAWN BY RJB
PROJECT ENG'R
APPROVED
DATE 06-05-08
PROJECT IP
USE DIMENSIONS ONLY
SCALE N.T.S.

AMERICAN WATER

USE APPROVED DRAWINGS ONLY FOR CONSTRUCTION PURPOSES

0201-0601-SD42

© Copyright Hanson Professional Services Inc. 2025

HANSON
Hanson Professional Services Inc.

DESIGNED	LJU	4/1/2024
DRAWN	RLA	4/1/2024
REVIEWED	CW	10/25/2024 12:00:00 AM

MODEL: sht-waterdetail03
FILE NAME: h:\13jobs\13L0177A\CADrRoad\Sheet\Plan-Sht 3 (8th-10th)\sht-waterdet03.dgn

Final

USER NAME = ander00846	DESIGNED - LJU	REVISED -	
	DRAWN - RLA	REVISED -	
PLOT SCALE = 0.16666667 ' / in.	CHECKED - CW	REVISED -	
PLOT DATE = 3/26/2025	DATE - 10/25/2024 12:00:00 AM	REVISED -	

STATE OF ILLINOIS
DEPARTMENT OF TRANSPORTATION

COURT STREET
WATER MAIN DETAILS

SCALE: 1" = 5' | SHEET OF SHEETS | STA. TO STA.

F.A.P. RTE.	SECTION	COUNTY	TOTAL SHEETS	SHEET NO.
693	20-00196-01-RS	TAZEWELL	136	59
	13L0177A	CONTRACT NO. 89859		
		ILLINOIS	FED. AID PROJECT	

WATER MAIN CROSSING UNDER SEWER

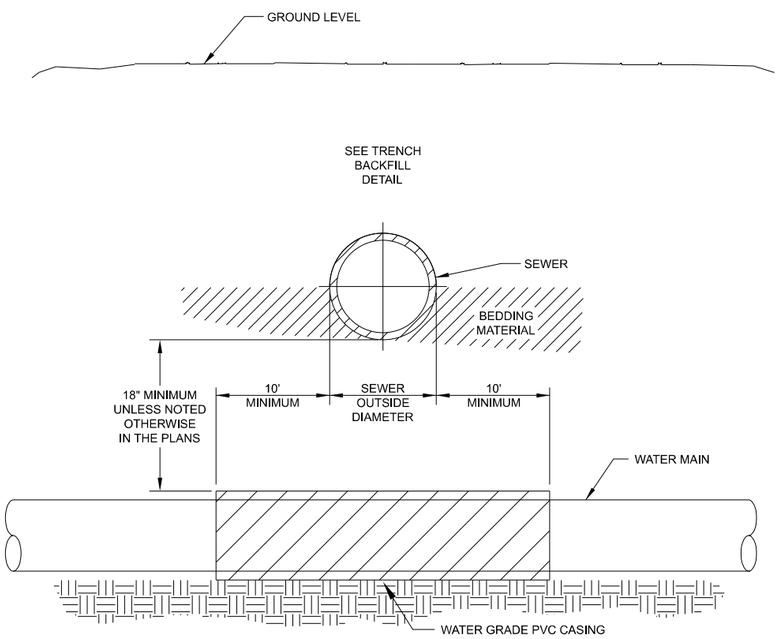

OPTION A - PRESSURE CLASS SEWER MAIN

1. REPLACE EXISTING SEWER WITH A PRESSURE CLASS MAIN IN LIEU OF CASING THE WATER MAIN.
2. THE SEWER SHALL BE REPLACED A MINIMUM OF 10' EACH SIDE OF THE WATERMAIN.

OPTION B - WATER MAIN CASING INSTALLATION

1. PROVIDE ADEQUATE SUPPORT FOR THE EXISTING SEWER TO PREVENT DAMAGE DUE TO SETTLEMENT.

NOTES:
1. FOLLOW TRENCH BACKFILL DETAIL WHEN BACK- FILLING WATER MAIN.
2. THE SELECTED OPTION MUST BE APPROVED BY AN IL-AWC REPRESENTATIVE AND THE RESIDENT ENGINEER.

WATER MAIN CROSSING UNDER SEWER DETAIL

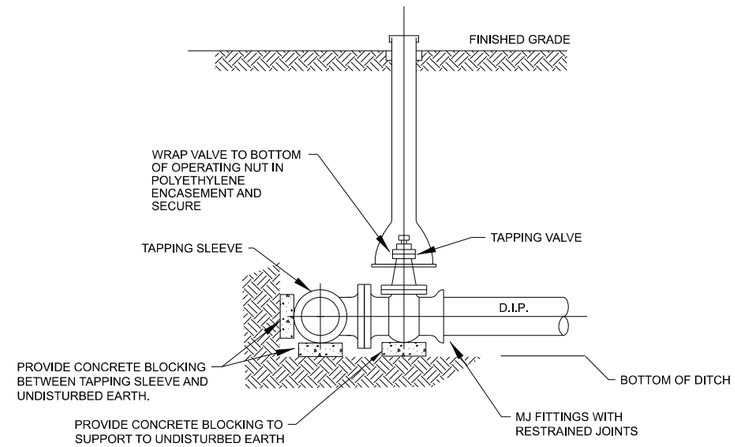

SECTION A-A

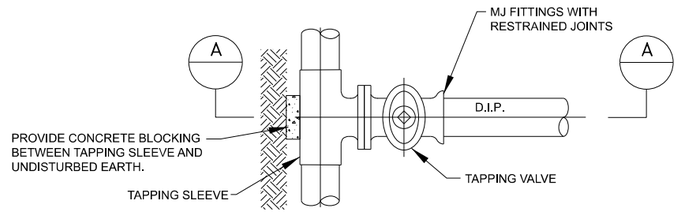

PLAN

TAPPING SLEEVE AND VALVE DETAIL-STANDARD

N.T.S.

NOTES:
1. CONTRACTOR TO SUBMIT RESTRAINED DESIGN.
2. SEE AMERICAN WATER DETAIL 03-0201-0601-SD6 FOR POURED CONCRETE DETAILS.

AMERICAN WATER STANDARD CIVIL
TAPPING SLEEVE AND VALVE BLOCKING DETAIL

AMERICAN WATER
CHAMPAIGN, IL. 61820

AMERICAN WATER ENGINEERING
201 DEVONSHIRE DRIVE
CHAMPAIGN, IL. 61820

AMERICAN WATER

DRAWN BY CAM
PROJECT ENGR
APPROVED
DATE 04/15/13
PROJECT
USE DIMENSIONS ONLY
SCALE N.T.S.

USE APPROVED DRAWINGS ONLY FOR CONSTRUCTION PURPOSES

SHT.

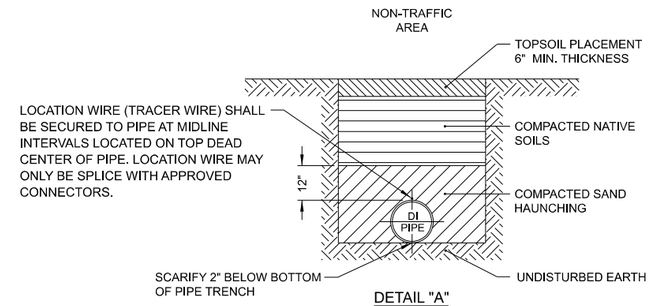

DETAIL "A"
DIP - SOIL
(FOR AREAS NOT TO BE PAVED)

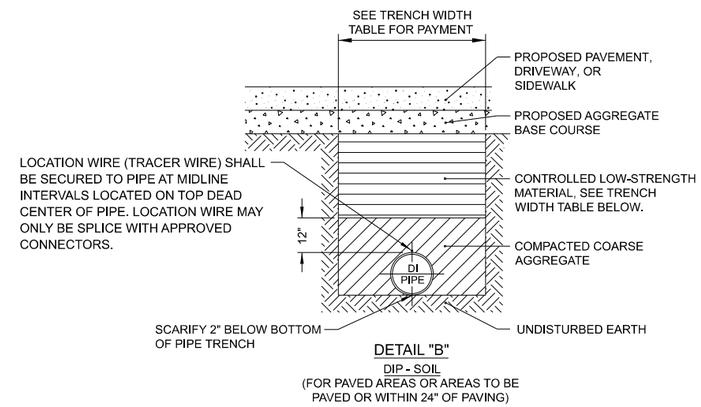

DETAIL "B"
DIP - SOIL
(FOR PAVED AREAS OR AREAS TO BE PAVED OR WITHIN 24" OF PAVING)

NOTES:
1. POLYETHYLENE ENCASING ON ALL D.I. PIPE, FITTINGS, VALVES & APPURTENANCES IN CORROSIVE SOILS.
2. THE COARSE AGGREGATE FOR HAUNCHING 12" ABOVE PIPE SHALL BE CONSIDERED INCLUDED IN THE COST OF THE PIPE PAY ITEM AND NO ADDITIONAL COMPENSATION WILL BE ALLOWED.
3. THE CONTROLLED LOW-STRENGTH MATERIAL WILL BE PAID FOR IN ACCORDANCE WITH SECTION 2210 OF ILAW STANDARD SPECIFICATIONS AND THE TRENCH WIDTH TABLE.
4. FOR PVC PIPE BEDDING, HAUNCHING AND INITIAL BACKFILL, SEE SPECIAL PROVISIONS AND ILAW STANDARD SPECIFICATIONS AND REFER TO ILAW STANDARD DETAIL 0201-0601-SD53. BACKFILL SHALL BE CONTROLLED LOW-STRENGTH MATERIAL.
5. LOCATION WIRE (TRACER WIRE) SHALL BE USED AT ALL PIPE INSTALLATIONS

TRENCH WIDTH TABLE FOR PAYMENT

LESS THAN 5 FEET TRENCH DEPTH	
WATER PIPING SIZE	MAX. TRENCH WIDTH
1" TO 6"	2'-0"
8" AND 18"	3'-0"
GREATER THAN 5 FEET TRENCH DEPTH	
WATER PIPING SIZE	MAX. TRENCH WIDTH
1" TO 6"	3'-6"
8" AND 18"	5'-0"

TRENCH BACKFILL DETAIL FOR WATER PIPING

© Copyright Hanson Professional Services Inc. 2025
HANSON
Hanson Professional Services Inc.

DESIGNED	LJU	4/1/2024
DRAWN	RLA	4/1/2024
REVIEWED	CW	10/25/2024 12:00:00 AM

MODEL: sht-watdetail04
FILE NAME: I:\13jobs\13L0177A\CAD\RoadSheet\Plan-Set 3 (Bts-10th)\sht-waterdet04.dgn

Final	USER NAME = ander00846	DESIGNED - LJU	REVISED -	
		DRAWN - RLA	REVISED -	
	PLOT SCALE = 0.16666667 ' / in.	CHECKED - CW	REVISED -	
	PLOT DATE = 3/26/2025	DATE - 10/25/2024 12:00:00 AM	REVISED -	

STATE OF ILLINOIS
DEPARTMENT OF TRANSPORTATION

COURT STREET
WATER MAIN DETAILS

SCALE: 1" = 5' | SHEET OF SHEETS | STA. TO STA.

F.A.P. RTE.	SECTION	COUNTY	TOTAL SHEETS	SHEET NO.
693	20-00196-01-RS	TAZEWELL	136	60
	13L0177A	CONTRACT NO. 89859		
		ILLINOIS	FED. AID PROJECT	

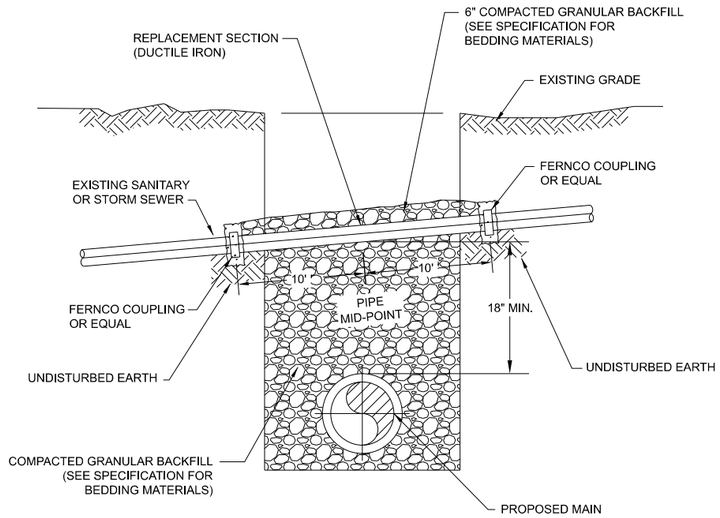

NOTES:

1. IF THE EXISTING SEWER IS DAMAGED OR REMOVED DURING CONSTRUCTION IT SHALL BE REPLACED ACROSS THE TRENCH SUCH THAT THE CONCRETE COLLARS ARE SUPPORTED ON UNDISTURBED EARTH.
2. THE CONCRETE COLLAR SHALL BE FORMED AT A JOINT WITH THE EXISTING SEWER USING FERNCO COUPLINGS.
3. THE REPLACEMENT SECTION SHALL BE CLASS 350 DUCTILE IRON PIPE WITH AN INSIDE DIAMETER EQUAL TO THE EXISTING PIPE. ANSI/AWWA C151/A21.51 DUCTILE IRON PIPE SHALL BE USED AS A MINIMUM STANDARD.
4. WHEN THE SEWER OWNER HAS REQUIREMENTS WHICH ARE MORE STRINGENT, THE CONTRACTOR SHALL CONFORM TO THE MORE STRINGENT REQUIREMENTS AND MAKE NO CLAIM FOR ADDITIONAL COMPENSATION OR AN EXTENSION OF TIME BECAUSE OF SUCH REQUIREMENTS.

REVISIONS

06-22-09
ADDED PIPE CENTER LINE DIMENSION

AMERICAN WATER STANDARD CIVIL SEWER REPLACEMENT DETAIL

AMERICAN WATER
VOORHEES, NJ 08043

AMERICAN WATER ENG. CENTER
213 CARRIAGE LANE
DELRAN, NJ 08075

AMERICAN WATER

DRAWN BY RJB
PROJECT ENG'R
APPROVED

DATE 10-03-07
PROJECT IP

USE DIMENSIONS ONLY
SCALE N.T.S.

USE APPROVED DRAWINGS ONLY
FOR CONSTRUCTION PURPOSES

0201-0601-SD44

WATER MAIN CROSSING OVER SEWER

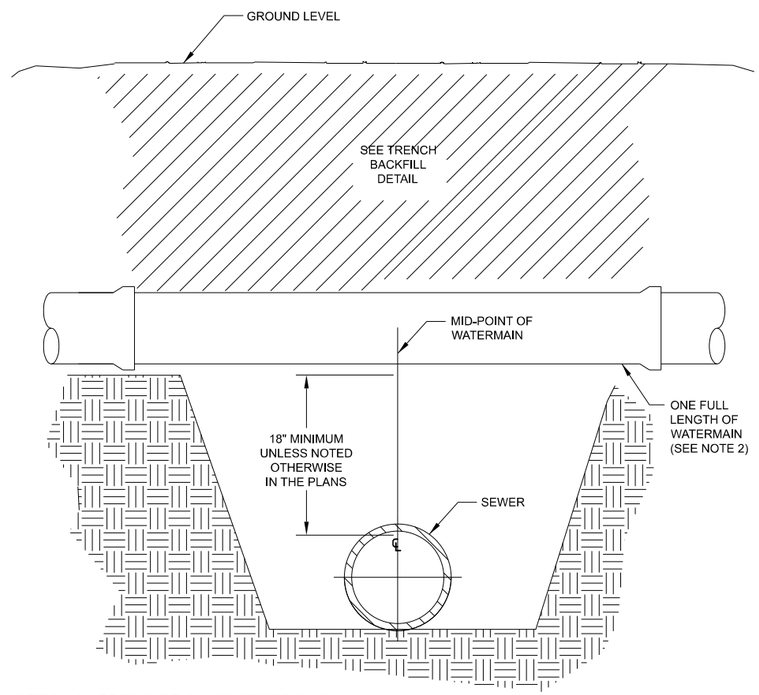

OPTION A - PRESSURE CLASS SEWER MAIN
(WHEN SEPARATION IS LESS THAN 18")

1. REPLACE EXISTING SEWER WITH A PRESSURE CLASS MAIN A MINIMUM OF 10' EACH SIDE OF THE WATER MAIN.

OPTION B - WATER MAIN INSTALLATION

(WHEN SEPARATION IS EQUAL TO OR GREATER THAN 18")

1. MID-POINT OF ONE FULL LENGTH OF WATER MAIN IS TO BE CENTERED ABOVE SEWER LINE.
2. PROVIDE ADEQUATE SUPPORT FOR THE WATER MAIN TO PREVENT DAMAGE DUE TO SETTLEMENT.

NOTES:

1. FOLLOW TRENCH BACKFILL DETAIL WHEN
2. BACK- FILLING WATER MAIN.
   THE SELECTED OPTION MUST BE APPROVED BY AN IL-AWC REPRESENTATIVE AND THE RESIDENT ENGINEER.

WATER MAIN CROSSING OVER SEWER DETAIL

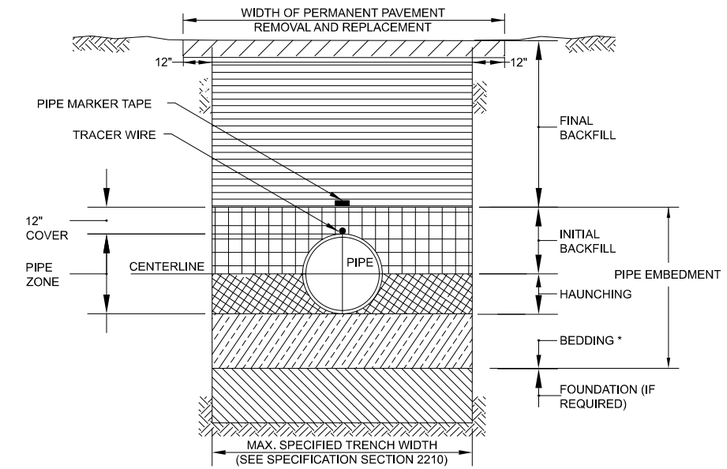

TRENCH TERMINOLOGY

FOUNDATION: A FOUNDATION IS NECESSARY ONLY WHEN NATIVE SOILS ARE UNSTABLE. FOR SUCH CONDITIONS, THE TRENCH IS OVER-EXCAVATED AND A LAYER OF SUPPORTIVE MATERIAL IS PLACED AND COMPACTED TO PROVIDE A FIRM FOUNDATION FOR THE SUBSEQUENT PIPE EMBEDMENT MATERIALS.

EMBEDMENT: THIS ZONE IS THE MOST IMPORTANT IN TERMS OF PIPE PERFORMANCE. IT IS DIVIDED INTO THE FOLLOWING SUB ZONES:

- BEDDING: TYPICALLY SIX INCHES OF SUPPORTIVE, COMPACTED MATERIAL. THIS ZONE PROVIDES EVEN SUPPORT FOR THE PIPE AND BRINGS IT TO GRADE. *
- HAUNCHING: EXTENDS FROM THE BOTTOM OF THE PIPE TO THE CENTERLINE OF THE PIPE. IT PROVIDES THE MOST RESISTANCE TO PIPE DEFLECTION. SPECIFYING PROPER MATERIALS AND COMPACTION ARE MOST IMPORTANT FOR THIS ZONE. IN MOST CASES NATIVE MATERIAL IS ACCEPTABLE. MATERIAL SHALL BE FREE OF ROCKS AND BE PLACED BY HAND TO PROTECT POLYETHYLENE ENCASING.
- INITIAL BACKFILL: EXTENDS FROM THE SPRINGLINE TO A POINT ABOVE THE TOP OF THE PIPE. THIS ZONE PROVIDES SOME PIPE SUPPORT AND HELPS TO PREVENT DAMAGE TO THE PIPE DURING PLACEMENT OF THE FINAL BACKFILL. THE COVER EXTENDS FROM THE TOP OF THE PIPE TO THE TOP OF THE INITIAL BACKFILL. THE DEPTH OF COVER SHOULD BE AS MUCH AS NECESSARY TO PROTECT THE PIPE DURING PLACEMENT OF THE FINAL BACKFILL. TWELVE INCHES IS A COMMON DEPTH OF COVER.

FINAL BACKFILL: THIS ZONE EXTENDS FROM THE TOP OF THE INITIAL BACKFILL TO THE TOP OF THE TRENCH. THIS ZONE HAS LITTLE INFLUENCE ON PIPE PERFORMANCE, BUT CAN BE IMPORTANT TO THE INTEGRITY OF ROADS AND STRUCTURES.

* UNLESS OTHERWISE DIRECTED BY COMPANY, OR FIELD CONDITIONS REQUIRE, BEDDING IS NOT REQUIRED FOR DUCTILE IRON MAIN. CONTRACTOR SHALL SCARIFY 2" BELOW BOTTOM OF PIPE.

REVISIONS

06-22-09
ADDED TRACER WIRE

AMERICAN WATER STANDARD CIVIL PIPE TRENCH TERMINOLOGY DETAIL

AMERICAN WATER
VOORHEES, NJ 08043

AMERICAN WATER ENG. CENTER
213 CARRIAGE LANE
DELRAN, NJ 08075

AMERICAN WATER

DRAWN BY RJB
PROJECT ENG'R
APPROVED

DATE 10-03-07
PROJECT IP

USE DIMENSIONS ONLY
SCALE N.T.S.

USE APPROVED DRAWINGS ONLY
FOR CONSTRUCTION PURPOSES

0201-0601-SD53

© Copyright: Hanson Professional Services Inc. 2025

HANSON
Hanson Professional Services Inc.

DESIGNED	LJU	4/1/2024
DRAWN	RLA	4/1/2024
REVIEWED	CW	10/25/2024 12:00:00 AM

MODEL: sht-watdetail05
FILE NAME: K:\13Jobs\13L0177A\CAD\RoadSheet\Plan-Set 3 (8th-10th)\sht-watdetail05.dgn

Final

USER NAME = ander00846	DESIGNED - LJU	REVISED -	
	DRAWN - RLA	REVISED -	
PLOT SCALE = 0.16666667 ' / in.	CHECKED - CW	REVISED -	
PLOT DATE = 3/26/2025	DATE - 10/25/2024 12:00:00 AM	REVISED -	

STATE OF ILLINOIS
DEPARTMENT OF TRANSPORTATION

COURT STREET
WATER MAIN DETAILS

SCALE: 1" = 5' | SHEET OF SHEETS | STA. TO STA.

F.A.P. RTE.	SECTION	COUNTY	TOTAL SHEETS	SHEET NO.
693	20-00196-01-RS	TAZEWELL	136	61
	13L0177A	CONTRACT NO. 89859		
	ILLINOIS	FED. AID PROJECT		

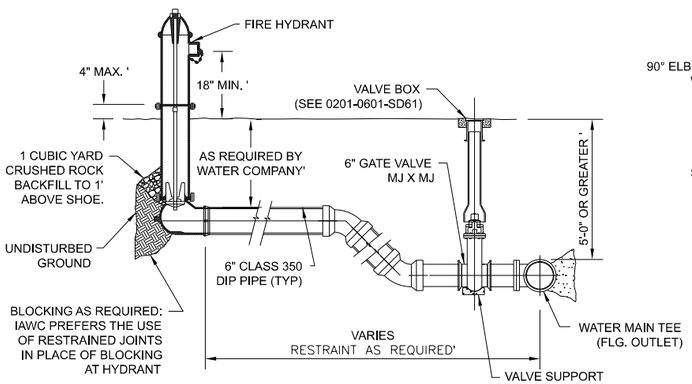

DEEP MAIN INSTALLATION

(ALTERNATIVE IS HYDRANT BARREL WITH DEEPER BURY OR BARREL EXTENSIONS PER ENGINEER'S RECOMMENDATIONS.)

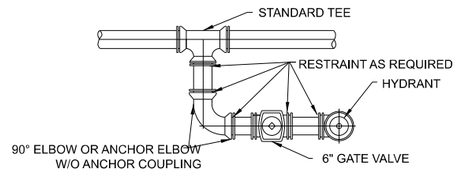

INSTALLATION PARALLEL TO MAIN

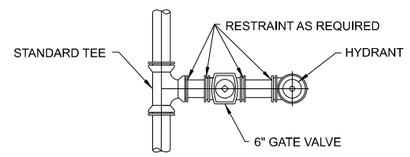

INSTALLATION PERPENDICULAR TO MAIN

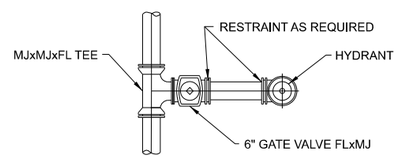

INSTALLATION PERPENDICULAR TO MAIN WITH MJxFLANGE TEE

NOTES:
1. THESE SCHEMATICS DISPLAY ALTERNATIVE LAYOUTS AND DETAIL OF RESTRAINT HAS NOT BEEN PROVIDED HERE
2. ALL FITTINGS SHALL BE MJ FOR HYDRANT ALTERNATIVES SHOWN.

AMERICAN WATER STANDARD
CIVIL
FIRE HYDRANT LAYOUT - ALTERNATIVES DETAIL

AMERICAN WATER
VOORHEES, NJ 08043

AMERICAN WATER ENG. CENTER
213 CARRIAGE LANE
DELRAN, NJ 08075

DRAWN BY RJB
PROJECT ENG'R
APPROVED
DATE 08-01-03
PROJECT IP
USE DIMENSIONS ONLY
SCALE N.T.S.

AMERICAN WATER

USE APPROVED DRAWINGS ONLY FOR CONSTRUCTION PURPOSES

0201-0601-SD33

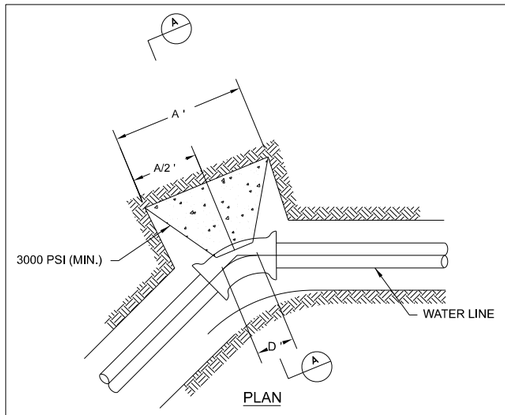

PLAN

A = LENGTH OF THRUST BLOCK
SEE DWG. NO. 0201-0601-SD6
B = 3xD
C = SEE NOTE 5
D = DIAMETER OF PIPE

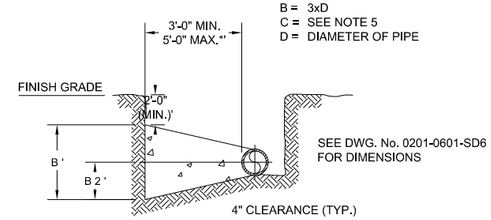

* SPECIAL DESIGN REQUIRED IF GREATER THAN 5'-0"

SECTION A-A

N.T.S.

NOTES:
1. COVER OVER TOP OF PIPE SHALL BE BELOW FROST LINE OR MINIMUM 30" IN NON-FROST AREAS OR ACCORDING TO REGULATORY REQUIREMENTS. IF GRADING PLANS RECEIVED BY THE ENGINEER/OWNER WITH THE REQUEST FOR WATER MAIN LAYOUT, INDICATE ADJUSTMENTS TO EXISTING GRADE, THEN PIPE SHALL BE INSTALLED TO MEET MINIMUM AND MAXIMUM COVER FROM PROPOSED GRADES SHOWN ON SAID PLANS.
2. THRUST BLOCKS SHALL BE BUILT AGAINST UNDISTURBED SOIL WITH ADEQUATE BACKING TO PREVENT MOVEMENT OF FITTING.
3. NO THRUST BLOCKS TO BE PLACED IN SEWER LATERAL DITCHES,.
4. THRUST BLOCKING MUST FIT IN EASEMENT, IN SOME CASES ADDITIONAL RESTRAINT MAY BE REQUIRED.
5. DIMENSION "C" BASED ON MINIMUM BEARING AREA. 18" MINIMUM.
6. POLYETHYLENE ENCASEMENT ON ALL D.I. PIPE AND FITTINGS.
7. PIPE JOINTS AND BOLTS MUST BE ACCESSIBLE.
8. ALL ANCHOR BOLTS SHALL BE COR-BLUE, MINIMUM 1/2" DIAMETER. COAT EXPOSED ROD WITH APPROVED MATERIAL AFTER CONCRETE HAS SET.
9. ALLOW SUFFICIENT CLEARANCE BETWEEN CONCRETE AND BOLTS FOR FUTURE MAINTENANCE.
10. ALL M.J. AND FLG. FITTINGS TO RECEIVE THRUST BLOCKS SHALL HAVE THE FASTENER AREAS KEPT FREE OF CONCRETE TO ALLOW FUTURE ACCESS TO THE FASTENERS AT THE JOINTS.
11. THRUST BLOCKING DETAILS ARE SHOWN HERE FOR TYPICAL INSTALLATIONS. IN SOME CASES, ADDITIONAL RESTRAINT MAY BE REQUIRED.
12. PORTLAND CEMENT CONCRETE USED FOR THRUST BLOCKS SHALL BE 300 PSI CONCRETE (MIN.).
13. BEARING AREAS ARE BASED ON SOIL HAVING AN ALLOWABLE SAFE LATERAL BEARING OF 2000 POUNDS PER SQUARE FOOT AND 200 PSI TEST PRESSURE. AREA MUST BE REVISED FOR SOILS WITH A LOWER BEARING CAPACITY OR HIGHER TEST PRESSURE.

REVISIONS
06-22-09
REMOVED #4 BAR REFERENCES

AMERICAN WATER STANDARD
CIVIL
THRUST BLOCK AT HORIZONTAL BENDS (EXCEEDING 3 FT. IN THICKNESS) - DETAIL

AMERICAN WATER
VOORHEES, NJ 08043

AMERICAN WATER ENG. CENTER
213 CARRIAGE LANE
DELRAN, NJ 08075

DRAWN BY RJB
PROJECT ENG'R
APPROVED
DATE 08-01-03
PROJECT IP
USE DIMENSIONS ONLY
SCALE N.T.S.

AMERICAN WATER

USE APPROVED DRAWINGS ONLY FOR CONSTRUCTION PURPOSES

0201-0601-SD20

© Copyright Hanson Professional Services Inc. 2025

HANSON
Hanson Professional Services Inc.

DESIGNED	LJU	4/1/2024
DRAWN	RLA	4/1/2024
REVIEWED	CW	10/25/2024 12:00:00 AM

MODEL: sht-watdetail06
FILE NAME: h:\13jobs\13L0177A\CAD\RoadSheet\Plan-Set 3 (Bits-10th)\sht-watdetail06.dgn

Final	USER NAME = ander00846	DESIGNED - LJU	REVISED -	STATE OF ILLINOIS DEPARTMENT OF TRANSPORTATION
		DRAWN - RLA	REVISED -	
	PLOT SCALE = 0.16666667 ' / in.	CHECKED - CW	REVISED -	
	PLOT DATE = 3/26/2025	DATE - 10/25/2024 12:00:00 AM	REVISED -	

COURT STREET
WATER MAIN DETAILS

SCALE: 1" = 5' | SHEET OF SHEETS | STA. TO STA.

F.A.P. RTE.	SECTION	COUNTY	TOTAL SHEETS	SHEET NO.
693	20-00196-01-RS	TAZEWELL	136	62
	13L0177A	CONTRACT NO. 89859		
		ILLINOIS	FED. AID PROJECT	

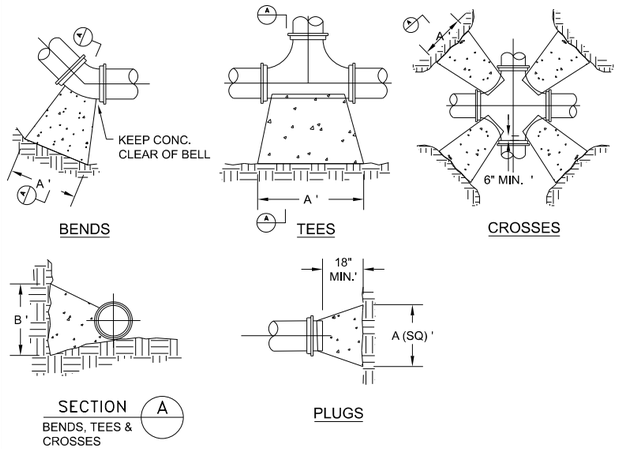

NOTES:

1. COVER OVER TOP OF PIPE SHALL BE BELOW FROST LINE OR 30" MINIMUM, 72" MAXIMUM ACCORDING TO REGULATORY REQUIREMENTS. IF GRADING PLANS RECEIVED BY THE ENGINEER/OWNER WITH THE REQUEST FOR WATER MAIN LAYOUT, INDICATE ADJUSTMENTS TO EXISTING GRADE, THEN PIPE SHALL BE INSTALLED TO MEET MINIMUM AND MAXIMUM COVER FROM PROPOSED GRADES SHOWN ON SAID PLANS.
2. THRUST BLOCKS SHALL BE BUILT AGAINST UNDISTURBED SOIL WITH ADEQUATE BACKING TO PREVENT MOVEMENT OF FITTING.
3. NO THRUST BLOCKS TO BE PLACED IN SEWER LATERAL DITCHES,.
4. THRUST BLOCKING MUST FIT IN EASEMENT, IN SOME CASES ADDITIONAL RESTRAINT MAY BE REQUIRED.
5. BASED ON 200 PSI (150 PSI STATIC PRESSURE PLUS 50 PSI WATER HAMMER) AND 2000 PSF SOIL BEARING.
6. POLYETHYLENE ENCASEMENT ON ALL D.I. PIPE AND FITTINGS.
7. PIPE JOINTS AND BOLTS MUST BE ACCESSIBLE.
8. ALLOW SUFFICIENT CLEARANCE BETWEEN CONCRETE AND BOLTS FOR FUTURE MAINTENANCE.
9. ALL ANCHOR BOLTS SHALL BE COR-BLUE, MINIMUM 1/2" DIAMETER. COAT EXPOSED ROD WITH ASPHALT CEMENT AFTER CONCRETE HAS SET.
10. ALL M.J. AND FLG. FITTINGS TO RECEIVE THRUST BLOCKS SHALL HAVE THE FASTENER AREAS FELT WRAPPED AND TAPED PRIOR TO THE CONCRETE POUR TO ALLOW FUTURE ACCESS TO THE FASTENERS AT THE JOINTS.
11. THRUST BLOCKING DETAILS ARE SHOWN HERE FOR TYPICAL INSTALLATIONS. IN SOME CASES, ADDITIONAL RESTRAINT MAY BE REQUIRED.
12. PORTLAND CEMENT CONCRETE USED FOR THRUST BLOCKS SHALL BE MIN 3000 PSI CONCRETE.
13. FOR UNSTABLE SOIL CONDITIONS, CHECK WITH ENGINEER FOR THRUST BLOCK DIMENSIONS.
14. FOR MAIN SIZES GREATER THAN 16", SEE ENGINEER FOR THRUST BLOCK DIMENSIONS.

REQUIRED BEARING AREA ON UNDISTURBED SOIL AND TYPICAL DIMENSIONS

PIPE SIZE	90 DEGREE BENDS			45 DEGREE BENDS			11.25 DEGREE BENDS			22.5 DEGREE BENDS			TEES/PLUGS		
	AREA (sq ft)	"A"	"B"	AREA (sq ft)	"A"	"B"	AREA (sq ft)	"A"	"B"	AREA (sq ft)	"A"	"B"	AREA (sq ft)	"A"	"B"
6	5.3	43"	18"	2.9	23"	18"	0.7	6"	18"	1.5	12"	18"	3.7	30"	18"
8	9.2	55"	24"	5.0	30"	24"	1.3	8"	24"	2.5	15"	24"	6.4	39"	24"
10	13.8	66"	30"	7.5	36"	30"	1.9	9"	30"	3.8	18"	30"	9.7	46"	30"
12	19.4	78"	36"	10.6	42"	36"	2.7	11"	36"	5.3	21"	36"	13.8	55"	36"
14	26.0	89"	42"	14.0	48"	42"	3.6	12"	42"	7.2	25"	42"	18.5	63"	42"
16	33.7	101"	48"	18.3	55"	48"	4.7	14"	48"	9.4	28"	48"	23.9	72"	48"

Area in square feet "A" and "B" in inches
Bearing table area is based on 200 psi maximum with soil bearing capacity of 2000 lbs/square foot.
For higher water pressures or lower soil pressures, consult Engineer for adjustments.
Bearing table area does not include a safety factor.
A safety factor and additional bearing area may be required as directed by the Engineer.

AMERICAN WATER STANDARD
CIVIL
THRUST BLOCK
DETAILS

AMERICAN WATER
VOORHEES, NJ 08043

AMERICAN WATER ENGINEERING
3806 CHURCH ROAD
MOUNT LAUREL, NJ 08054

DRAWN BY RJB
PROJECT ENG'R
APPROVED
DATE 10-23-07
PROJECT IP
USE DIMENSIONS ONLY
SCALE N.T.S.

AMERICAN WATER

USE APPROVED DRAWINGS ONLY
FOR CONSTRUCTION PURPOSES

0201-0601-SD6

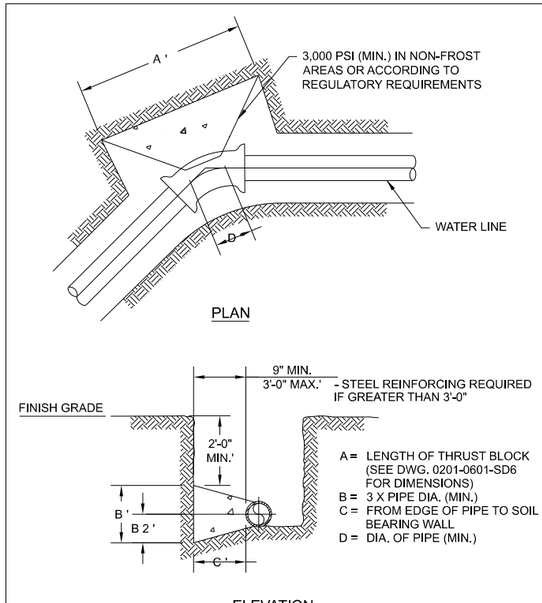

NOTES:

1. COVER OVER TOP OF PIPE SHALL BE BELOW FROST LINE OR MINIMUM 30" IN NON-FROST AREAS OR ACCORDING TO REGULATORY REQUIREMENTS. IF GRADING PLANS RECEIVED BY THE ENGINEER/OWNER WITH THE REQUEST FOR WATER MAIN LAYOUT, INDICATE ADJUSTMENTS TO EXISTING GRADE, THEN PIPE SHALL BE INSTALLED TO MEET MINIMUM AND MAXIMUM COVER FROM PROPOSED GRADES SHOWN ON SAID PLANS.
2. THRUST BLOCKS SHALL BE BUILT AGAINST UNDISTURBED SOIL WITH ADEQUATE BACKING TO PREVENT MOVEMENT OF FITTING.
3. NO THRUST BLOCKS TO BE PLACED IN SEWER LATERAL DITCHES,.
4. THRUST BLOCKING MUST FIT IN EASEMENT, IN SOME CASES ADDITIONAL RESTRAINT MAY BE REQUIRED.
5. DIMENSION "C" BASED ON MINIMUM BEARING AREA. 18" MINIMUM.
6. POLYETHYLENE ENCASEMENT ON ALL D.I. PIPE AND FITTINGS.
7. PIPE JOINTS AND BOLTS MUST BE ACCESSIBLE.
8. ALL ANCHOR BOLTS SHALL BE COR-BLUE, MINIMUM 1/2" DIAMETER. COAT EXPOSED ROD WITH APPROVED MATERIAL AFTER CONCRETE HAS SET.
9. ALLOW SUFFICIENT CLEARANCE BETWEEN CONCRETE AND BOLTS FOR FUTURE MAINTENANCE.
10. ALL M.J. AND FLG. FITTINGS TO RECEIVE THRUST BLOCKS SHALL HAVE THE FASTENER AREAS KEPT FREE OF CONCRETE TO ALLOW FUTURE ACCESS TO THE FASTENERS AT THE JOINTS.
11. THRUST BLOCKING DETAILS ARE SHOWN HERE FOR TYPICAL INSTALLATIONS. IN SOME CASES, ADDITIONAL RESTRAINT MAY BE REQUIRED.
12. PORTLAND CEMENT CONCRETE USED FOR THRUST BLOCKS SHALL BE 3000 PSI CONCRETE (MIN.).
13. BEARING AREAS ARE BASED ON SOIL HAVING AN ALLOWABLE SAFE LATERAL BEARING OF 2000 POUNDS PER SQUARE FOOT AND 200 PSI TEST PRESSURE. AREA MUST BE REVISED FOR SOILS WITH A LOWER BEARING CAPACITY OR HIGHER TEST PRESSURE.

AMERICAN WATER STANDARD
CIVIL
THRUST BLOCK AT HORIZONTAL BENDS
(LESS THAN 3 FEET IN THICKNESS)-DETAIL

AMERICAN WATER
VOORHEES, NJ 08043

AMERICAN WATER ENG. CENTER
213 CARRIAGE LANE
DELRAN, NJ 08075

DRAWN BY RJB
PROJECT ENG'R
APPROVED
DATE 05-01-03
PROJECT IP
USE DIMENSIONS ONLY
SCALE N.T.S.

AMERICAN WATER

USE APPROVED DRAWINGS ONLY
FOR CONSTRUCTION PURPOSES

0201-0601-SD19

© Copyright Hanson Professional Services Inc. 2025

HANSON
Hanson Professional Services Inc.

DESIGNED	LJU	4/1/2024
DRAWN	RLA	4/1/2024
REVIEWED	CW	10/25/2024 12:00:00 AM

MODEL: sht-watdetail07
FILE NAME: k:\Jobs\13L0177A\CAD\Road\Sheet\Plan-Set 3 (8th-10th)\sht-waterdet07.dgn

Final

USER NAME = ander00846	DESIGNED - LJU	REVISED -	
	DRAWN - RLA	REVISED -	
PLOT SCALE = 0.16666667 ' / in.	CHECKED - CW	REVISED -	
PLOT DATE = 3/26/2025	DATE - 10/25/2024 12:00:00 AM	REVISED -	

STATE OF ILLINOIS
DEPARTMENT OF TRANSPORTATION

COURT STREET
WATER MAIN DETAILS

SCALE: 1" = 5' | SHEET OF SHEETS | STA. TO STA.

F.A.P. RTE.	SECTION	COUNTY	TOTAL SHEETS	SHEET NO.
693	20-00196-01-RS	TAZEWELL	136	63
	13L0177A	CONTRACT NO. 89859		
		ILLINOIS	FED. AID PROJECT	

SPECIAL CONSTRUCTION REQUIREMENTS

WHERE REQUIRED WATER MAIN SEPARATION FROM SEWER CANNOT BE MAINTAINED

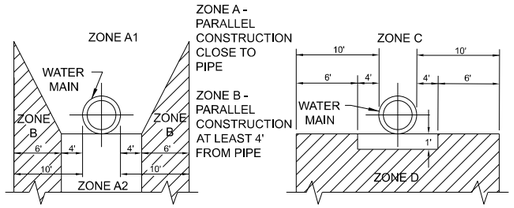

PARALLEL CONSTRUCTION

PERPENDICULAR CONSTRUCTION

ZONE C - PERPENDICULAR ABOVE OR EVEN HORIZONTAL

ZONE D - PERPENDICULAR BELOW HORIZONTAL IF AN EXISTING SEWER IS LOCATED WITHIN THESE LIMITS. THE CONDITIONS REQUIREMENTS MAY APPLY (CONFIRM WITH REGULATOR)

IF AN EXISTING SEWER IS LOCATED WITHIN ZONES A1, A2, B, C, OR D OF A PROPOSED WATER MAIN, THE FOLLOWING SPECIAL REQUIREMENTS APPLY:

ZONE

A. NO WATER MAINS SHALL BE CONSTRUCTED WITHOUT SPECIAL PERMISSION FROM THE APPROPRIATE HEALTH OR ENVIRONMENTAL REGULATOR.

B. IF THE SEWER DOES NOT MEET ZONE B REQUIREMENTS, THE WATER MAIN SHALL BE OF PRESSURE CLASS 200 PIPE FOR PVC AND CLASS 350 FO D.I. PIPE. SEWER SHALL BE CONSTRUCTED EQUAL TO WATER PIPE AND TESTED FOR WATER TIGHTNESS.

C. NO WATER MAINS SHALL BE CONSTRUCTED WITHOUT SPECIAL PERMISSION FROM THE HEALTH REGULATOR. IF PERMISSION IS GRANTED, THE SEWER PIPE SHALL BE ENCASED AND/OR REPLACED WITH WATER MAIN GRADE PIPE AND THE WATER MAIN SHALL BE OF CLASS 200 PIPE OR EQUIVALENT.

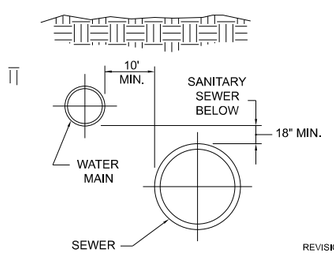

PARALLEL CONSTRUCTION

REQUIRED SEPARATION BETWEEN WATER MAINS AND SANITARY SEWERS

BASIC SEPARATION REQUIREMENTS:

WATER MAINS AND SEWERS SHOULD BE SEPARATED AS FAR AS IS REASONABLE IN BOTH THE HORIZONTAL AND VERTICAL DIRECTIONS WITH SEWERS LOWER THAN WATER MAINS.

PARALLEL CONSTRUCTION: THE HORIZONTAL DISTANCE BETWEEN PRESSURE WATER MAINS AND SEWERS SHALL BE AT LEAST 10 FEET

PERPENDICULAR CONSTRUCTION (CROSSING): PRESSURE WATER MAINS SHALL BE AT LEAST 18" ABOVE SANITARY SEWERS WHERE THESE LINES MUST CROSS.

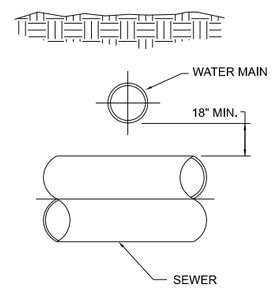

PERPENDICULAR CONSTRUCTION

REVISIONS
06-22-09
REVISED NOTE C.
REMOVED NOTE D.
REMOVED #4 REBAR AND CONCRETE DETAIL

AMERICAN WATER STANDARD CIVIL
SPECIAL REQUIREMENTS FOR WATER MAIN - DETAIL

AMERICAN WATER
VOORHEES, NJ 08043

AMERICAN WATER ENGINEERING
3906 CHURCH ROAD
MOUNT LAUREL, NJ 08054

DRAWN BY RJB
PROJECT ENG'R
APPROVED

DATE 06-05-08
PROJECT IP

AMERICAN WATER

USE DIMENSIONS ONLY
SCALE N.T.S.

USE APPROVED DRAWINGS ONLY FOR CONSTRUCTION PURPOSES

0201-0601-SD43

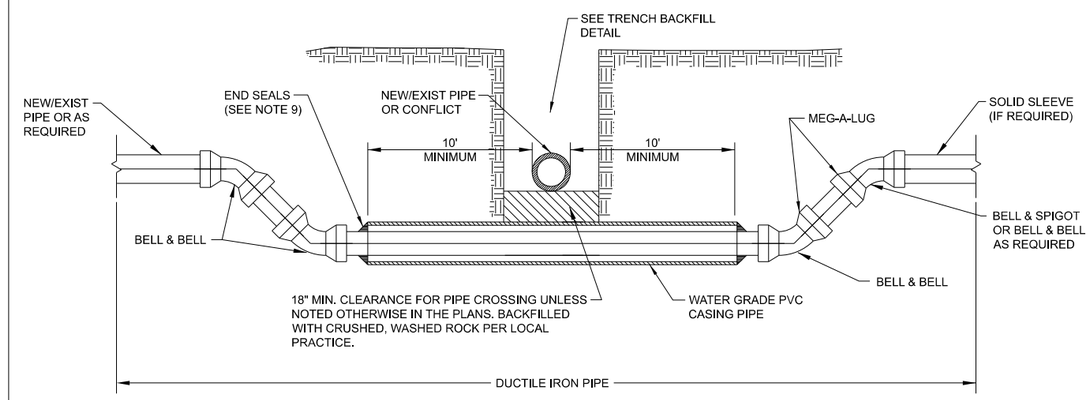

LEGEND

RESTRAINED JOINT

NOTES:

1. ALL PIPE TO BE JOINT RESTRAINED.
2. PIPE IS TO BE DUCTILE IRON, MINIMUM PRESSURE CLASS 350. ALL DUCTILE IRON PIPE SHALL BE POLYETHYLENE WRAPPED FOR THE ENTIRE LENGTH.
3. BEGIN/END RESTRAINED JOINT STATIONING TO BE SHOWN ON THE APPROVED CONSTRUCTION DRAWINGS. ALL BENDS & FITTINGS SHALL HAVE STATIONING AND ELEVATION SHOWN ON THE APPROVED CONSTRUCTION DRAWINGS. THE BOTTOM ELEVATION OF THE CONFLICT AND THE TOP ELEVATION OF THE DUCTILE IRON PIPE AT THE CENTERLINE OF THE CONFLICT SHALL BE SHOWN ON THE APPROVED CONSTRUCTION DRAWINGS.
4. SEPARATION REQUIREMENTS SHALL BE FOLLOWED WITH REGARD TO CONFLICT PIPE.
5. PVC CASING PIPE TO BE WATER GRADE C900 DR25 PIPE.
6. THE PVC CASING PIPE AND SEALING THE PIPE ENDS WILL BE CONSIDERED INCLUDED IN THE CONTRACT UNIT PRICE PER FOOT FOR PVC CASING PIPE (SIZE SPECIFIED IN THE PLANS).
7. FOLLOW TRENCH BACKFILL DETAIL WHEN BACK- FILLING WATER MAIN.
8. THE SELECTED OPTION MUST BE APPROVED BY AN ILLINOIS AMERICAN WATER (ILAW) REPRESENTATIVE AND THE RESIDENT ENGINEER.
9. PVC CASING PIPE, CASING SPACERS, AND END SEALS SHALL BE PER ILAW SPECIFICATION 02225 AND THE SPECIAL PROVISIONS.

OPTION A - PRESSURE CLASS SEWER MAIN

1. REPLACE EXISTING SEWER WITH A PRESSURE CLASS MAIN IN LIEU OF CASING THE WATER MAIN.
2. THE SEWER SHALL BE REPLACED A MINIMUM OF 10' EACH SIDE OF THE WATERMAIN.

OPTION B - WATER MAIN CASING INSTALLATION

1. PROVIDE ADEQUATE SUPPORT FOR THE EXISTING SEWER TO PREVENT DAMAGE DUE TO SETTLEMENT.

VERTICAL REALIGNMENT OF WATER MAIN CROSSING UNDER SEWER AND PVC CASSING PIPE DETAIL

© Copyright Hanson Professional Services Inc. 2025

HANSON
Hanson Professional Services Inc.

DESIGNED	LJU	4/1/2024
DRAWN	RLA	4/1/2024
REVIEWED	CW	10/25/2024 12:00:00 AM

MODEL: sht-waldetail08
FILE NAME: k:\13jobs\13L0177A\CAD\Road\Sheet\Plan-Set 3 (8in-10in)\sht-waterdet08.dgn

Final	USER NAME = ander00846	DESIGNED - LJU	REVISED -	
		DRAWN - RLA	REVISED -	
	PLOT SCALE = 0.16666667 ' / in.	CHECKED - CW	REVISED -	
	PLOT DATE = 3/26/2025	DATE - 10/25/2024 12:00:00 AM	REVISED -	

STATE OF ILLINOIS
DEPARTMENT OF TRANSPORTATION

COURT STREET
WATER MAIN DETAILS

SCALE: 1" = 5' | SHEET OF SHEETS | STA. TO STA.

F.A.P. RTE.	SECTION	COUNTY	TOTAL SHEETS	SHEET NO.
693	20-00196-01-RS	TAZEWELL	136	64
	13L0177A	CONTRACT NO. 89859		
		ILLINOIS	FED. AID PROJECT	

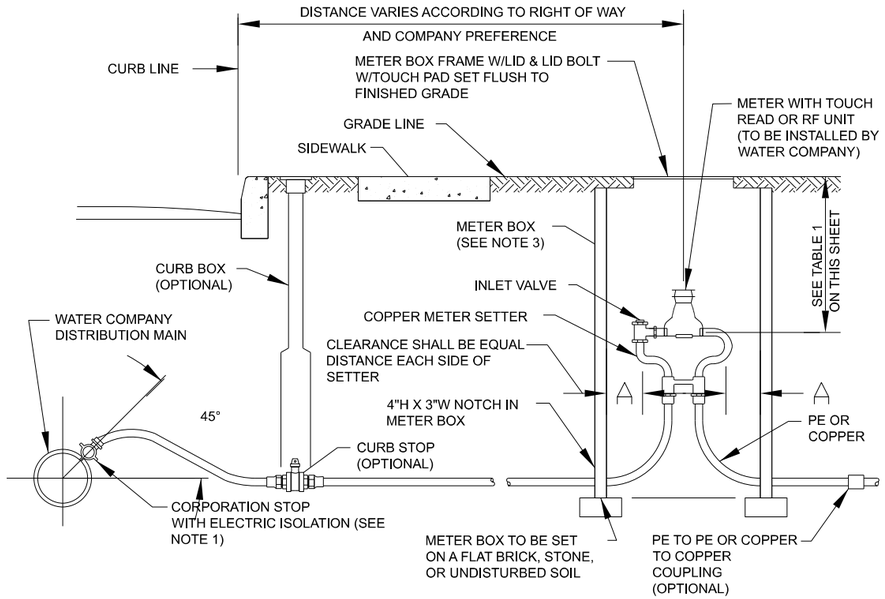

TABLE 1

DISTRICT	DEPTH
CAIRO	18"
INTERURBAN	18"
ALTON	18"
CHAMPAIGN	18"
LINCOLN	18"
PEKIN	18"
PEORIA	18"
CHICAGO METRO	18"
PONTIAC	18"
STREATOR	18"
STERLING	18"

NOTES:

1. CORPORATION STOP WITH STRAIGHT COUPLING NUT. SERVICE SADDLES WILL BE USED FOR ALL TAPS IN A/C, PVC OR CONCRETE MAINS.
2. 18" I.D. CHAMBER FOR USE WITH 5/8" METER. 20" I.D. CHAMBER FOR USE WITH 1" METER. SQUARE METER BOXES MAY BE USED IF LOCAL PREFERENCE EXISTS.
3. METER BOX LOCATION TO BE DETERMINED BY LOCAL AUTHORITY AND AWW.
4. SERVICE LINE AND METER BOX OWNERSHIP VARIES BY LOCAL TARIFF.
5. IN HEAVY FROST AREAS, A PLASTIC INNER LID AND BLANKET CAN BE USED.
6. CONNECTIONS BETWEEN PIPE LENGTHS SHALL BE COMPRESSION OR FLARE AND MAY DEPEND ON LOCAL PLUMBING REQUIREMENT.

AMERICAN WATER STANDARD
CIVIL
3/4", 1" & 2" WATER SERVICE INSTALLATION DETAIL

AMERICAN WATER
VOORHEES, NJ 08043

AMERICAN WATER ENG. CENTER
213 CARRIAGE LANE
DELRAN, NJ 08075

DRAWN BY RJB
PROJECT ENG'R
APPROVED
DATE
PROJECT IP
USE DIMENSIONS ONLY
SCALE N.T.S.

AMERICAN WATER

USE APPROVED DRAWINGS ONLY FOR CONSTRUCTION PURPOSES

0201-0601-SD47

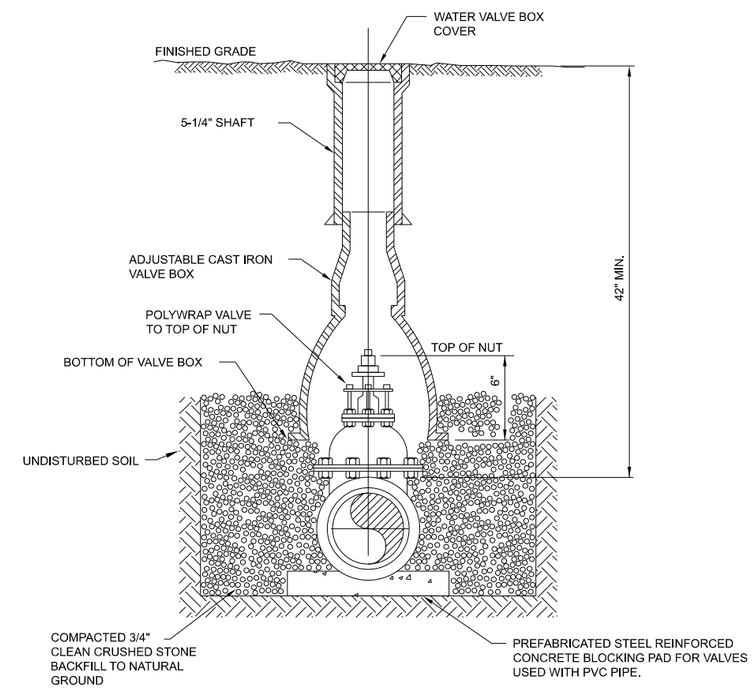

AMERICAN WATER STANDARD
CIVIL
VALVE BOX INSTALLATION DETAIL

AMERICAN WATER
VOORHEES, NJ 08043

AMERICAN WATER ENG. CENTER
213 CARRIAGE LANE
DELRAN, NJ 08075

DRAWN BY RJB
PROJECT ENG'R
APPROVED
DATE
PROJECT IP
USE DIMENSIONS ONLY
SCALE N.T.S.

AMERICAN WATER

USE APPROVED DRAWINGS ONLY FOR CONSTRUCTION PURPOSES

0201-0601-SD59

© Copyright Hanson Professional Services Inc. 2025
HANSON
Hanson Professional Services Inc.

DESIGNED	LJU	4/1/2024
DRAWN	RLA	4/1/2024
REVIEWED	CW	10/25/2024 12:00:00 AM

MODEL: sht-watdetail09
FILE NAME: k:\13jobs\13L0177A\CAD\Road\Sheet\Plan-Set 3 (8in-10in)\sht-watdet09.dgn

Final

USER NAME = ander00846	DESIGNED - LJU	REVISED -	
	DRAWN - RLA	REVISED -	
PLOT SCALE = 0.16666667 ' / in.	CHECKED - CW	REVISED -	
PLOT DATE = 3/26/2025	DATE - 10/25/2024 12:00:00 AM	REVISED -	

STATE OF ILLINOIS
DEPARTMENT OF TRANSPORTATION

COURT STREET
WATER MAIN DETAILS

SCALE: 1" = 5' | SHEET OF SHEETS | STA. TO STA.

F.A.P. RTE.	SECTION	COUNTY	TOTAL SHEETS	SHEET NO.
693	20-00196-01-RS	TAZEWELL	136	65
	13L0177A	CONTRACT NO. 89859		
		ILLINOIS	FED. AID PROJECT	

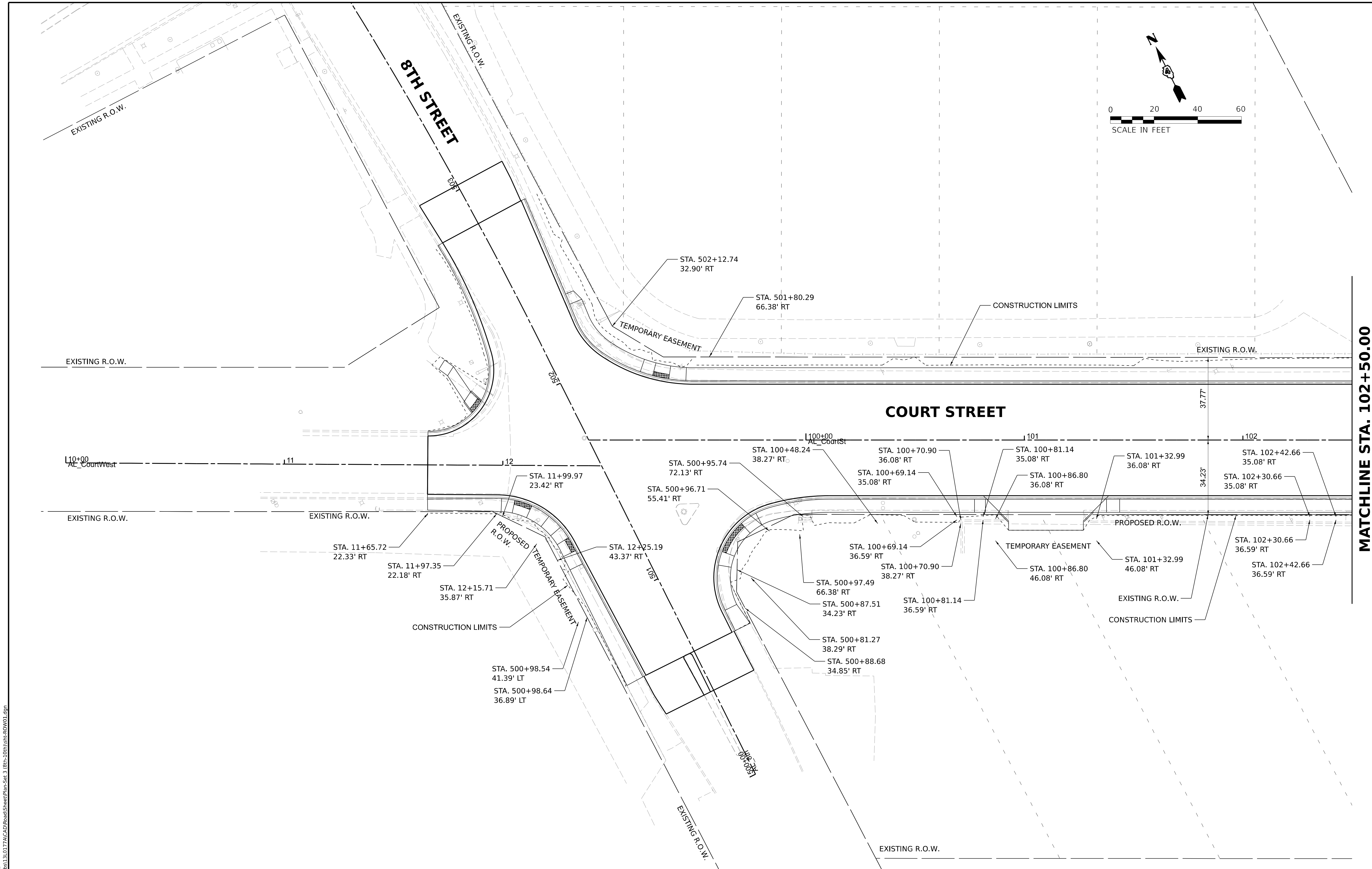

Final	USER NAME = ander00846	DESIGNED - SD/JC	REVISED -	STATE OF ILLINOIS DEPARTMENT OF TRANSPORTATION
		DRAWN - RA/CL	REVISED -	
	PLOT SCALE = 0.16666667 ' / in.	CHECKED - MGD	REVISED -	
	PLOT DATE = 3/26/2025	DATE - 10/25/2024 12:00:00 AM	REVISED -	

COURT STREET
RIGHT OF WAY PLANS

SCALE: 1" = 20' | SHEET OF SHEETS | STA. TO STA.

F.A.P. RTE.	SECTION	COUNTY	TOTAL SHEETS	SHEET NO.
693	20-00196-01-RS	TAZEWELL	136	66
	13L0177A	CONTRACT NO. 89859		
	ILLINOIS FED. AID PROJECT			

© Copyright Hanson Professional Services Inc. 2025
HANSON
Hanson Professional Services Inc.

DESIGNED	JFC	7/26/2023 12:00:00 AM
DRAWN	RLA	7/26/2023 12:00:00 AM
REVIEWED	MGD	10/25/2024 12:00:00 AM

MODEL: sht-ROW01
FILE NAME: I:\13jobs\13L0177A\CAD\Road\Sheet\Plan-Set 3 (8th-10th)\sht-ROW01.dgn

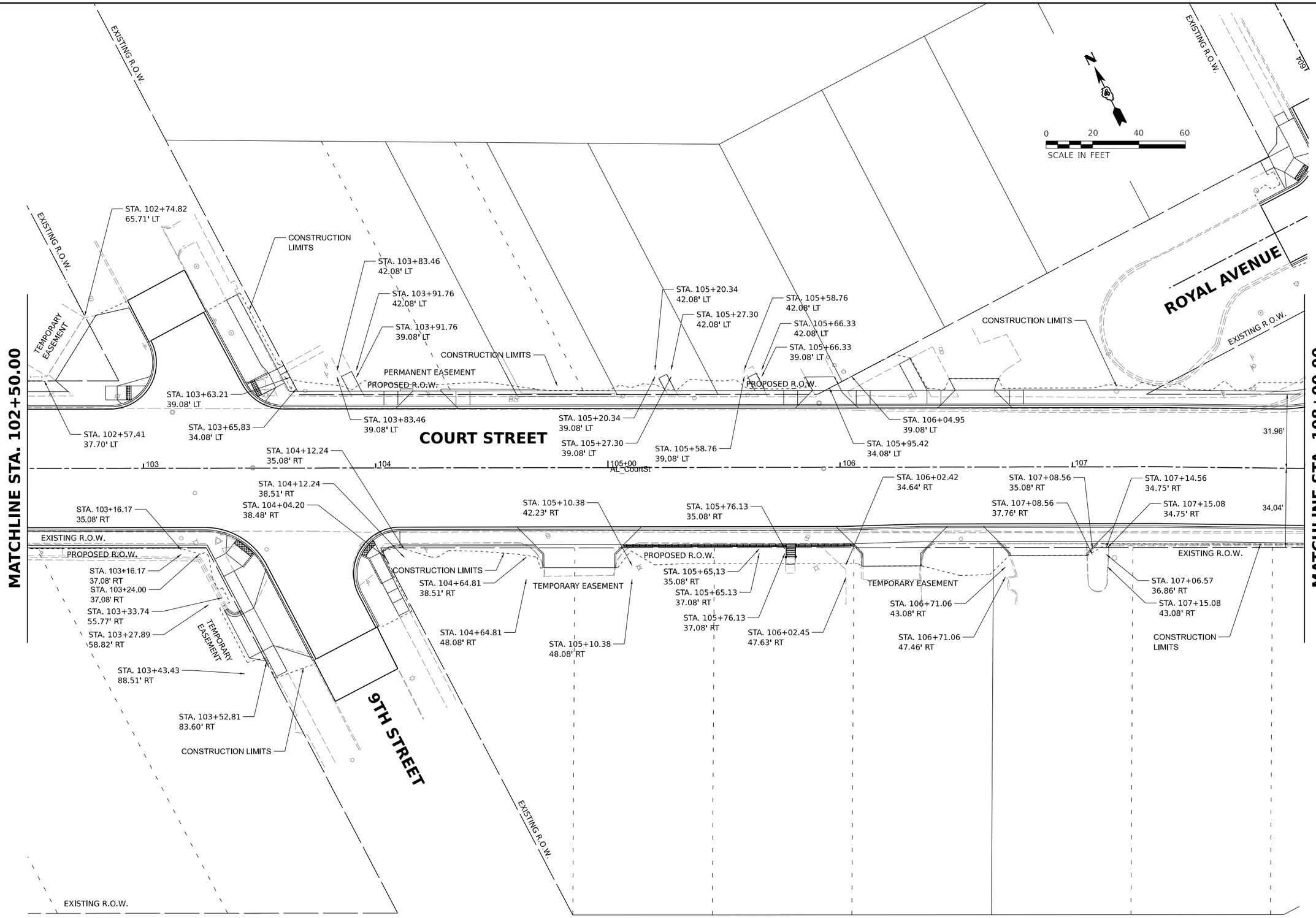

© Copyright Hanson Professional Services Inc. 2025

HANSON
Hanson Professional Services Inc.

DESIGNED	JFC	7/26/2023 12:00:00 AM
DRAWN	RLA	7/26/2023 12:00:00 AM
REVIEWED	MGD	10/25/2024 12:00:00 AM

MODEL: sht-ROW02
FILE NAME: K:\13Jobs\13L0177A\CADRoad\Sheet\Plan-Set 3 (8th-10th)\sht-ROW02.dgn

Final

USER NAME	= ander00846	DESIGNED -	SD/JC	REVISED -	
		DRAWN -	RA/CL	REVISED -	
PLOT SCALE	= 0.16666667 ' / in.	CHECKED -	MGD	REVISED -	
PLOT DATE	= 3/26/2025	DATE -	10/25/2024 12:00:00 AM	REVISED -	

STATE OF ILLINOIS
DEPARTMENT OF TRANSPORTATION

COURT STREET
RIGHT OF WAY PLANS

SCALE: 1" = 20' | SHEET OF SHEETS | STA. TO STA.

F.A.P. RTE.	SECTION	COUNTY	TOTAL SHEETS	SHEET NO.
693	20-00196-01-RS	TAZEWELL	136	67
	13L0177A	CONTRACT NO. 89859		
		ILLINOIS	FED. AID PROJECT	

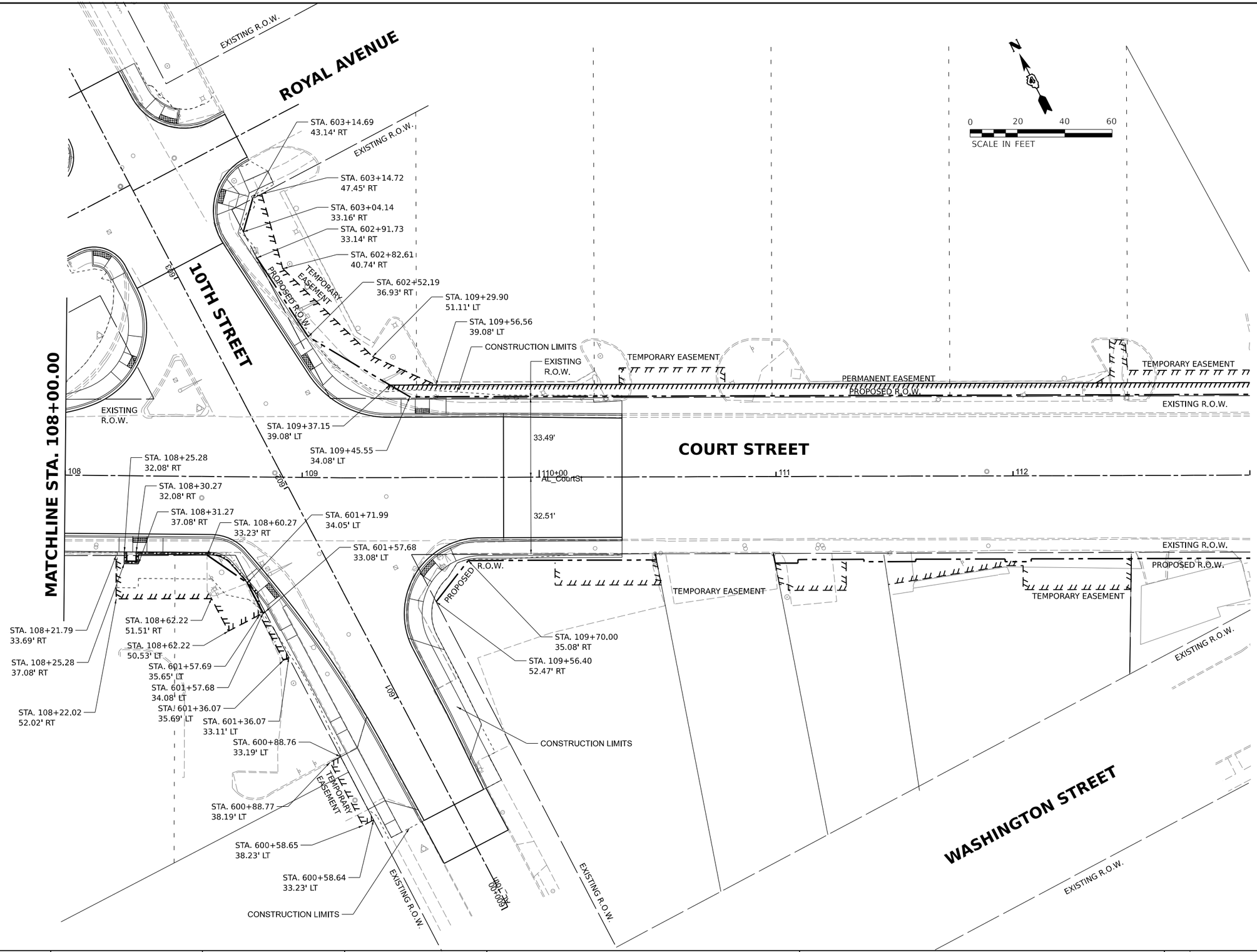

© Copyright Hanson Professional Services Inc. 2025

HANSON
Hanson Professional Services Inc.

DESIGNED	JFC	7/26/2023 12:00:00 AM
DRAWN	RLA	7/26/2023 12:00:00 AM
REVIEWED	MGD	10/25/2024 12:00:00 AM

MODEL: sht-ROW03
FILE NAME: K:\13Jobs\13L0177A\CADRoad\Sheet\Plan-Set 1 (8th-10th)\sht-ROW03.dgn

Final

USER NAME = ander00846	DESIGNED - SD/JC	REVISED -	
	DRAWN - RA/CL	REVISED -	
PLOT SCALE = 0.16666667 ' / in.	CHECKED - MGD	REVISED -	
PLOT DATE = 3/26/2025	DATE - 10/25/2024 12:00:00 AM	REVISED -	

STATE OF ILLINOIS
DEPARTMENT OF TRANSPORTATION

COURT STREET
RIGHT OF WAY PLANS

SCALE: 1" = 20' | SHEET OF SHEETS | STA. TO STA.

F.A.P. RTE.	SECTION	COUNTY	TOTAL SHEETS	SHEET NO.
693	20-00196-01-RS	TAZEWELL	136	68
	13L0177A	CONTRACT NO. 89859		
	ILLINOIS	FED. AID PROJECT		

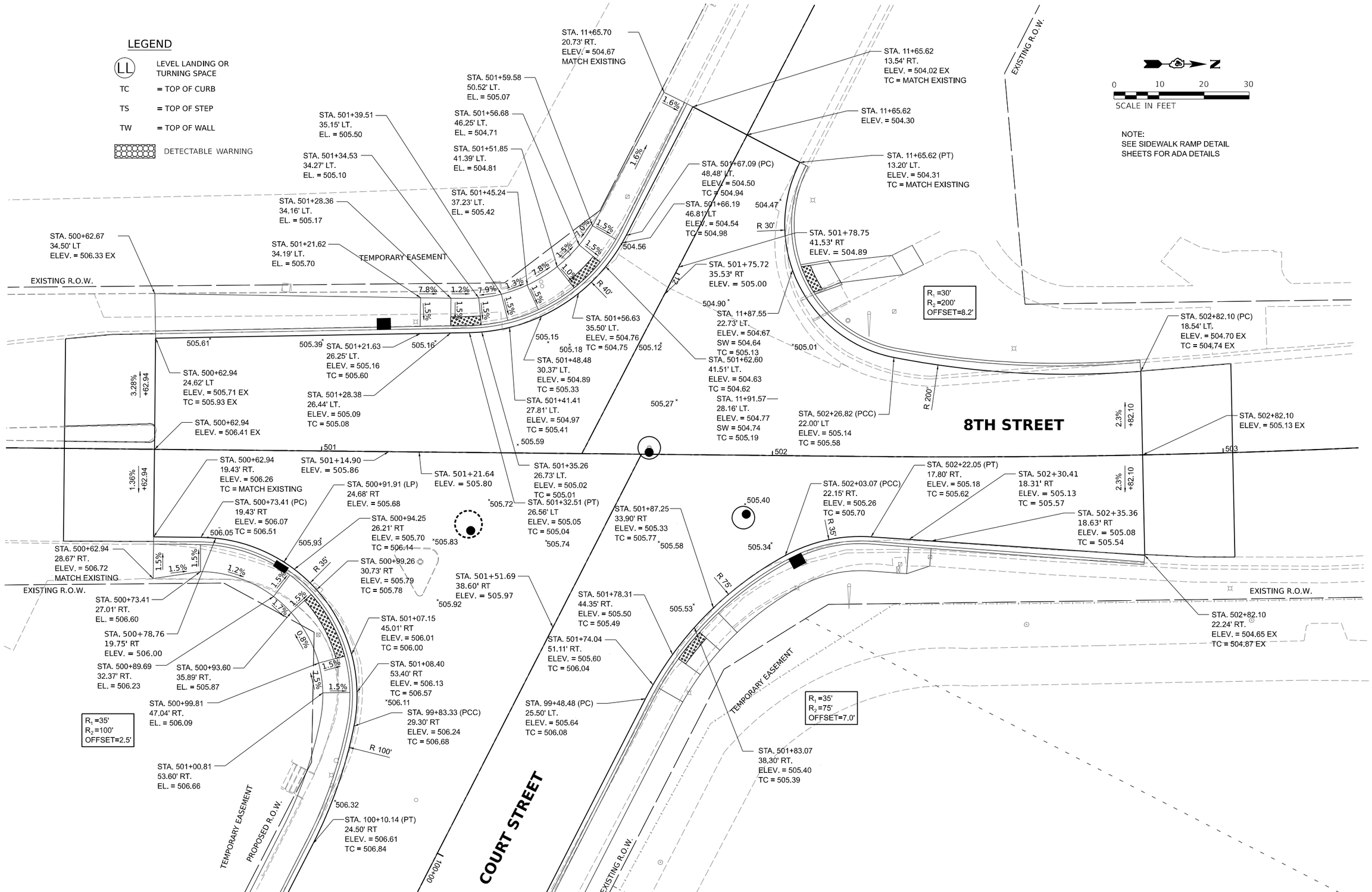

DESIGNED	JFC	7/26/2023 12:00:00 AM			
DRAWN	RLA	7/26/2023 12:00:00 AM			
REVIEWED	MGD	10/25/2024 12:00:00 AM			

MODEL: sht-int01
FILE NAME: K:\Jobs\13L0177A\CADRoad\Sheet\Plan-Set 3 (8th-10th)\ht-Int01.dgn

© Copyright Hanson Professional Services Inc. 2025
HANSON
Hanson Professional Services Inc.

Final

USER NAME = ander00846	DESIGNED - SD/JC	REVISED -	
	DRAWN - RA/CL	REVISED -	
PLOT SCALE = 0.16666667 ' / in.	CHECKED - MGD	REVISED -	
PLOT DATE = 3/26/2025	DATE - 10/25/2024 12:00:00 AM	REVISED -	

STATE OF ILLINOIS
DEPARTMENT OF TRANSPORTATION

COURT STREET AND 8TH STREET
INTERSECTION DETAIL

SCALE: 1" = 10' | SHEET OF SHEETS | STA. TO STA.

F.A.P. RTE.	SECTION	COUNTY	TOTAL SHEETS	SHEET NO.
693	20-00196-01-RS	TAZEWELL	136	69
	13L0177A	CONTRACT NO. 89859		
		ILLINOIS	FED. AID PROJECT	

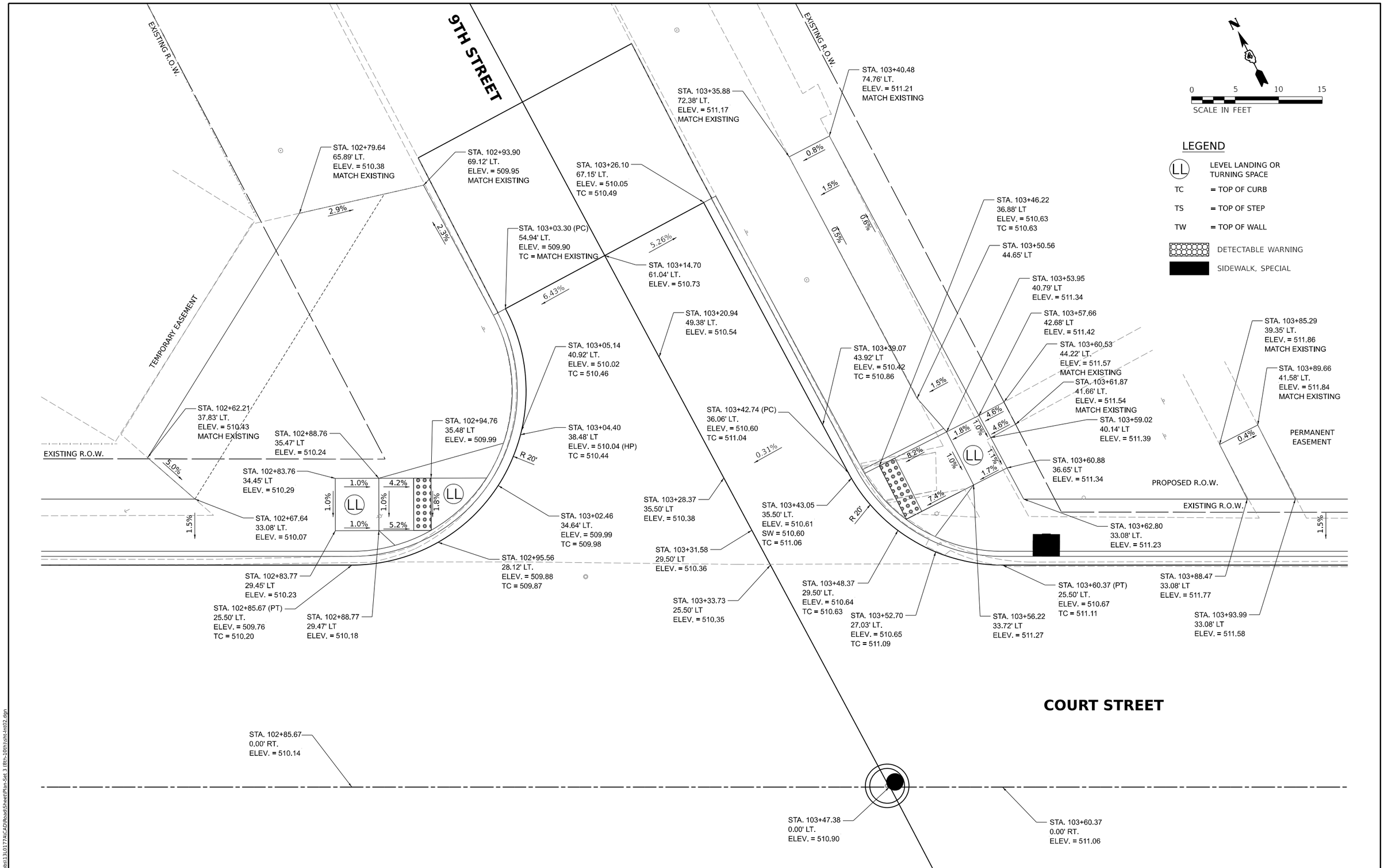

© Copyright Hanson Professional Services Inc. 2025

HANSON
Hanson Professional Services Inc.

DESIGNED	JFC	7/26/2023 12:00:00 AM
DRAWN	RLA	7/26/2023 12:00:00 AM
REVIEWED	MGD	10/25/2024 12:00:00 AM

MODEL: sht-int02
FILE NAME: K:\Jobs\13L0177A\CADRoadSheets\Plan-Set 3 (8th-10th)\sht-int02.dgn

Final

USER NAME = ander00846	DESIGNED - SD/JC	REVISED -	
	DRAWN - RA/CL	REVISED -	
PLOT SCALE = 0.16666667 ' / in.	CHECKED - MGD	REVISED -	
PLOT DATE = 3/26/2025	DATE - 10/25/2024 12:00:00 AM	REVISED -	

STATE OF ILLINOIS
DEPARTMENT OF TRANSPORTATION

COURT STREET AND 9TH STREET
INTERSECTION DETAIL

SCALE: 1" = 5' | SHEET OF SHEETS | STA. TO STA.

F.A.P. RTE.	SECTION	COUNTY	TOTAL SHEETS	SHEET NO.
693	20-00196-01-RS	TAZEWELL	136	70
	13L0177A	CONTRACT NO. 89859		
	ILLINOIS	FED. AID PROJECT		

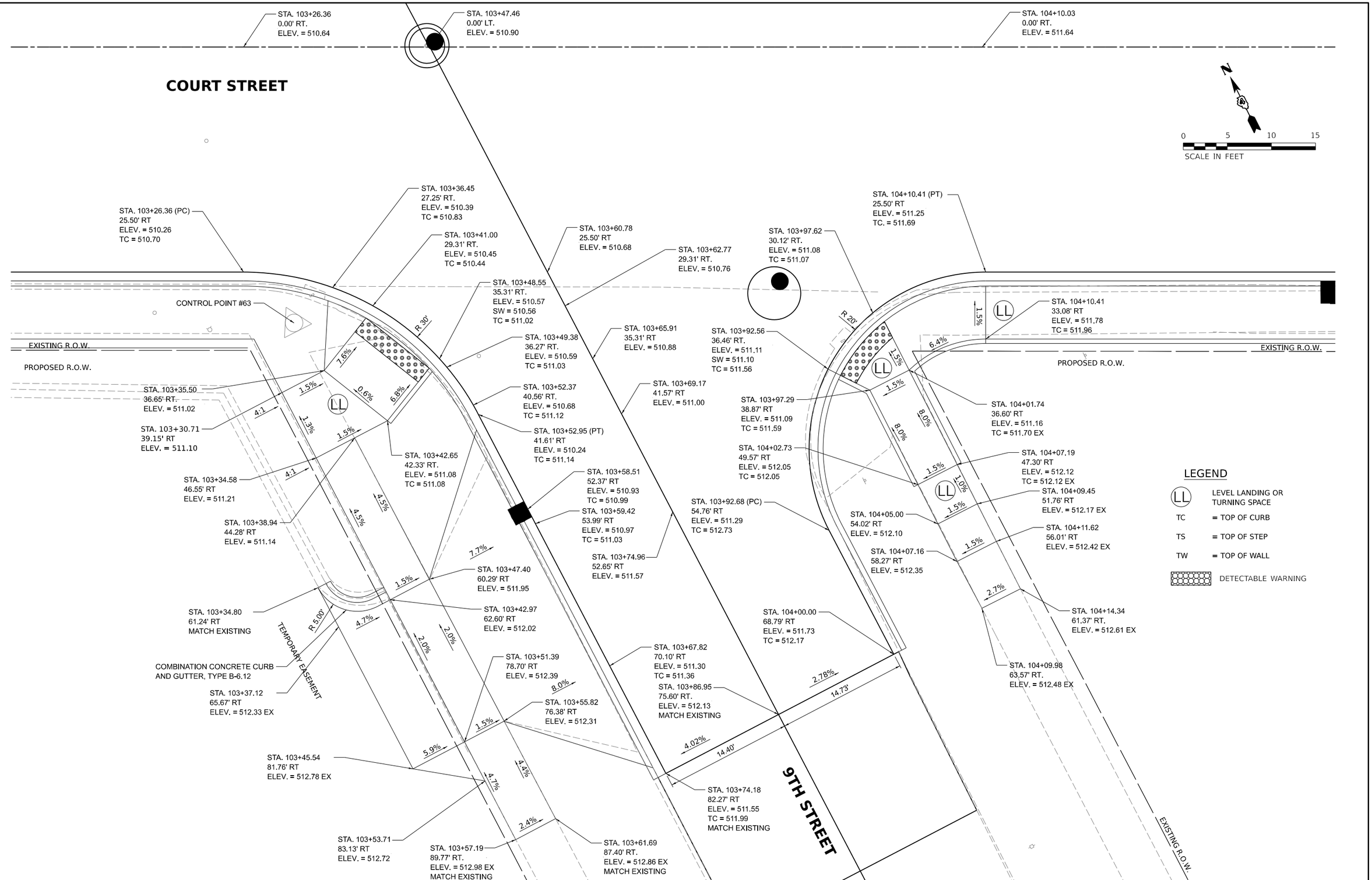

© Copyright Hanson Professional Services Inc. 2025

HANSON
Hanson Professional Services Inc.

DESIGNED	JFC	7/26/2023 12:00:00 AM
DRAWN	RLA	7/26/2023 12:00:00 AM
REVIEWED	MGD	10/25/2024 12:00:00 AM

MODEL: sht-int03
FILE NAME: I:\13Jobs\13L0177A\CAD\Road\Sheet\Plan-Set 3 (8th-10th)\sht-int03.dgn

Final

USER NAME = ander00846	DESIGNED - SD/JC	REVISED -	
	DRAWN - RA/CL	REVISED -	
PLOT SCALE = 0.16666667 ' / in.	CHECKED - MGD	REVISED -	
PLOT DATE = 3/26/2025	DATE - 10/25/2024 12:00:00 AM	REVISED -	

STATE OF ILLINOIS
DEPARTMENT OF TRANSPORTATION

COURT STREET AND 9TH STREET
INTERSECTION DETAIL

SCALE: 1" = 5' | SHEET OF SHEETS | STA. TO STA.

F.A.P. RTE.	SECTION	COUNTY	TOTAL SHEETS	SHEET NO.
693	20-00196-01-RS	TAZEWELL	136	71
	13L0177A	CONTRACT NO. 89859		
		ILLINOIS	FED. AID PROJECT	

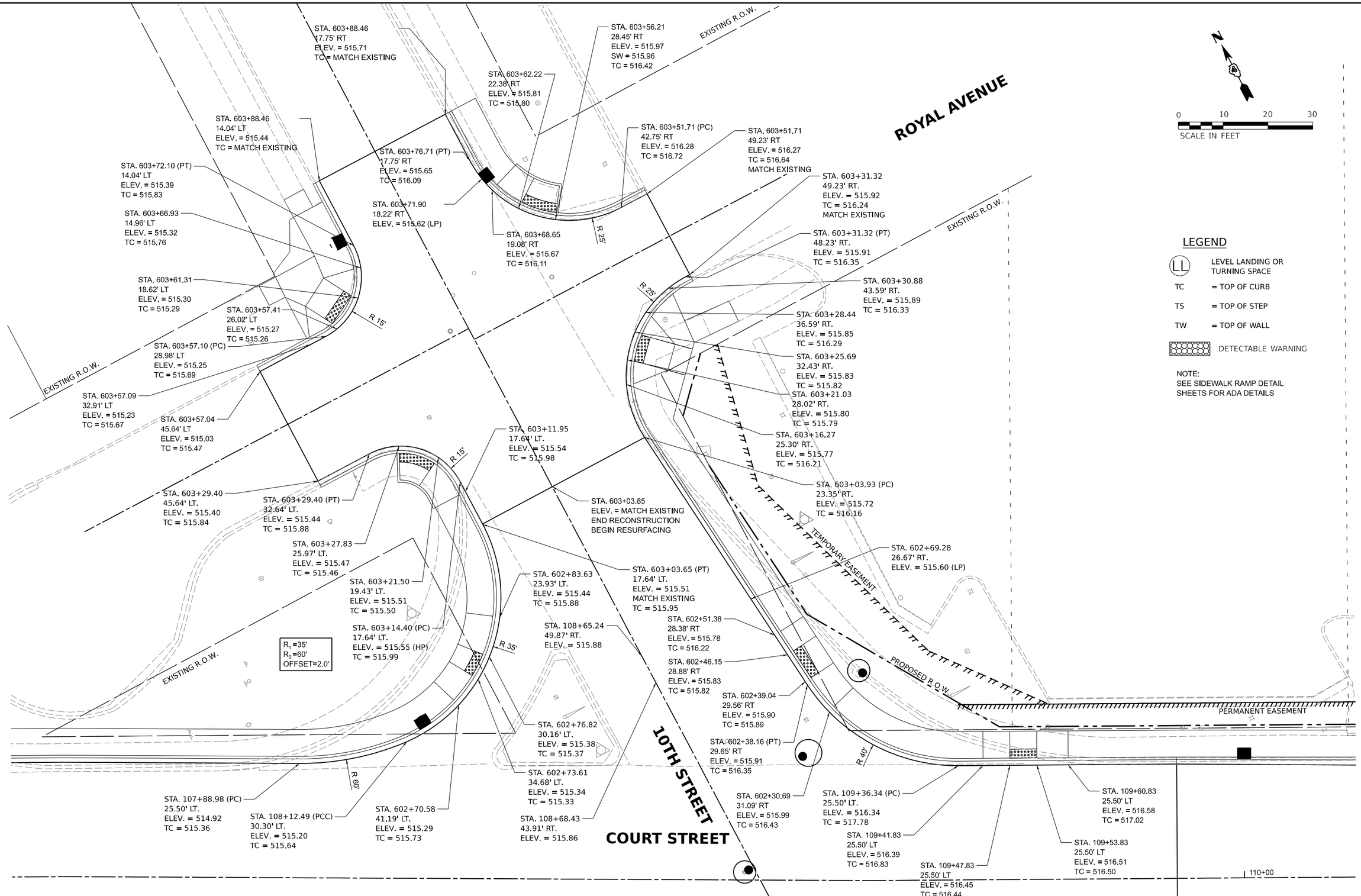

© Copyright Hanson Professional Services Inc. 2025

HANSON
Hanson Professional Services Inc.

DESIGNED	JFC	7/26/2023 12:00:00 AM
DRAWN	RLA	7/26/2023 12:00:00 AM
REVIEWED	MGD	10/25/2024 12:00:00 AM

MODEL: sht-int04
FILE NAME: E:\13Jobs\13L0177A\CAD\RoadSheet\Plan-Set 3 (8th-10th)\sht-int04.dgn

Final

USER NAME = ander00846	DESIGNED - SD/JC	REVISED -	
	DRAWN - RA/CL	REVISED -	
PLOT SCALE = 0.16666667 ' / in.	CHECKED - MGD	REVISED -	
PLOT DATE = 3/26/2025	DATE - 10/25/2024 12:00:00 AM	REVISED -	

STATE OF ILLINOIS
DEPARTMENT OF TRANSPORTATION

COURT STREET AND 10TH STREET
INTERSECTION DETAIL

SCALE: 1" = 10' | SHEET OF SHEETS | STA. TO STA.

F.A.P. RTE.	SECTION	COUNTY	TOTAL SHEETS	SHEET NO.
693	20-00196-01-RS	TAZEWELL	136	72
	13L0177A	CONTRACT NO. 89859		
		ILLINOIS	FED. AID PROJECT	

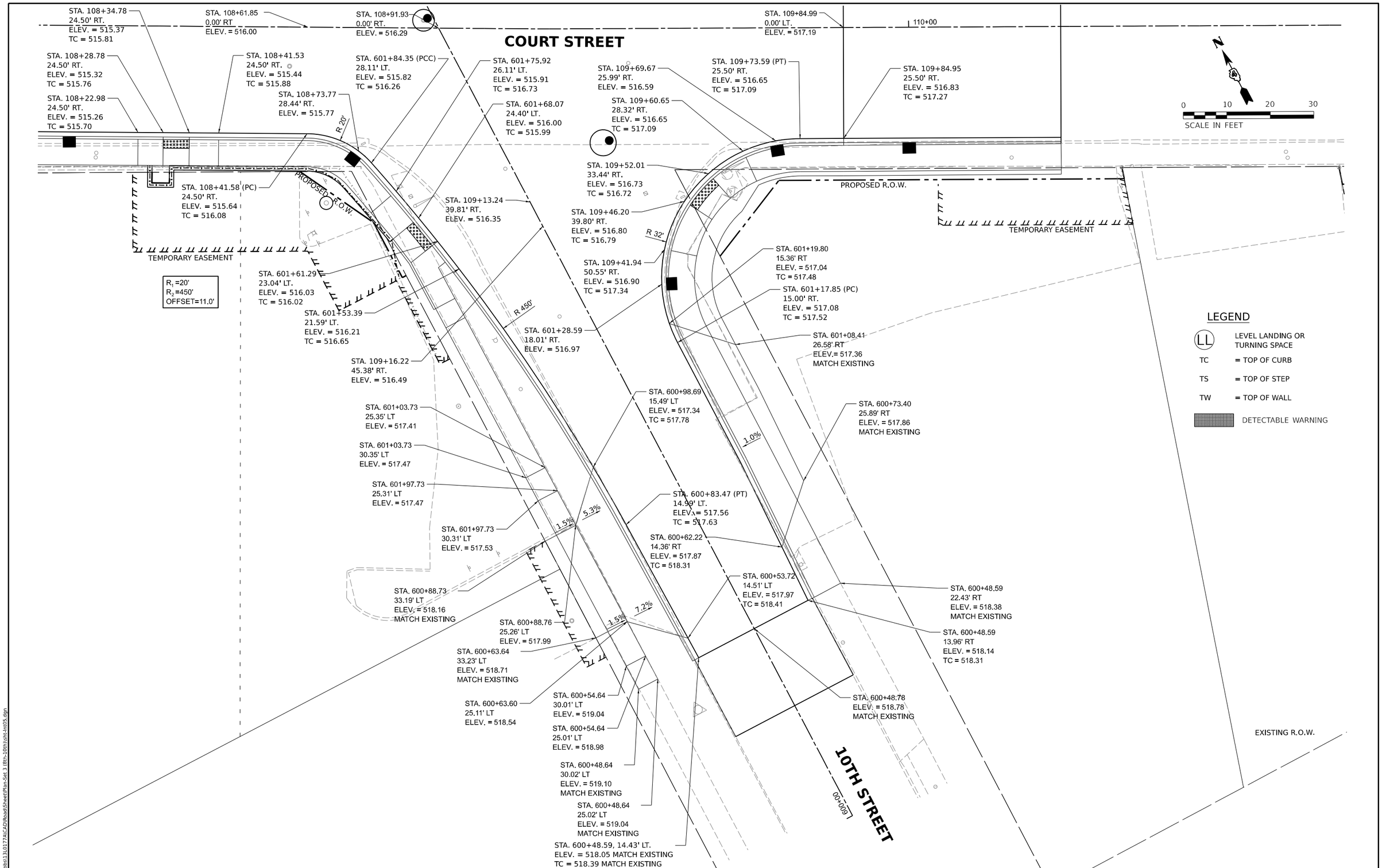

© Copyright Hanson Professional Services Inc. 2025

HANSON
Hanson Professional Services Inc.

DESIGNED	JFC	7/26/2023 12:00:00 AM
DRAWN	RLA	7/26/2023 12:00:00 AM
REVIEWED	MGD	10/25/2024 12:00:00 AM

MODEL: sht-int05
FILE NAME: k:\13jobs\13L0177A\CADRoad\Sheet\Plan-Set 3 (8th-10th)\sht-int05.dgn

Final

USER NAME = ander00846	DESIGNED - SD/JC	REVISED -	
	DRAWN - RA/CL	REVISED -	
PLOT SCALE = 0.16666667 ' / in.	CHECKED - MGD	REVISED -	
PLOT DATE = 3/26/2025	DATE - 10/25/2024 12:00:00 AM	REVISED -	

STATE OF ILLINOIS
DEPARTMENT OF TRANSPORTATION

COURT STREET AND 10TH STREET
INTERSECTION DETAIL

SCALE: 1" = 10' | SHEET OF SHEETS | STA. TO STA.

F.A.P. RTE.	SECTION	COUNTY	TOTAL SHEETS	SHEET NO.
693	20-00196-01-RS	TAZEWELL	136	73
	13L0177A	CONTRACT NO. 89859		
	ILLINOIS	FED. AID PROJECT		

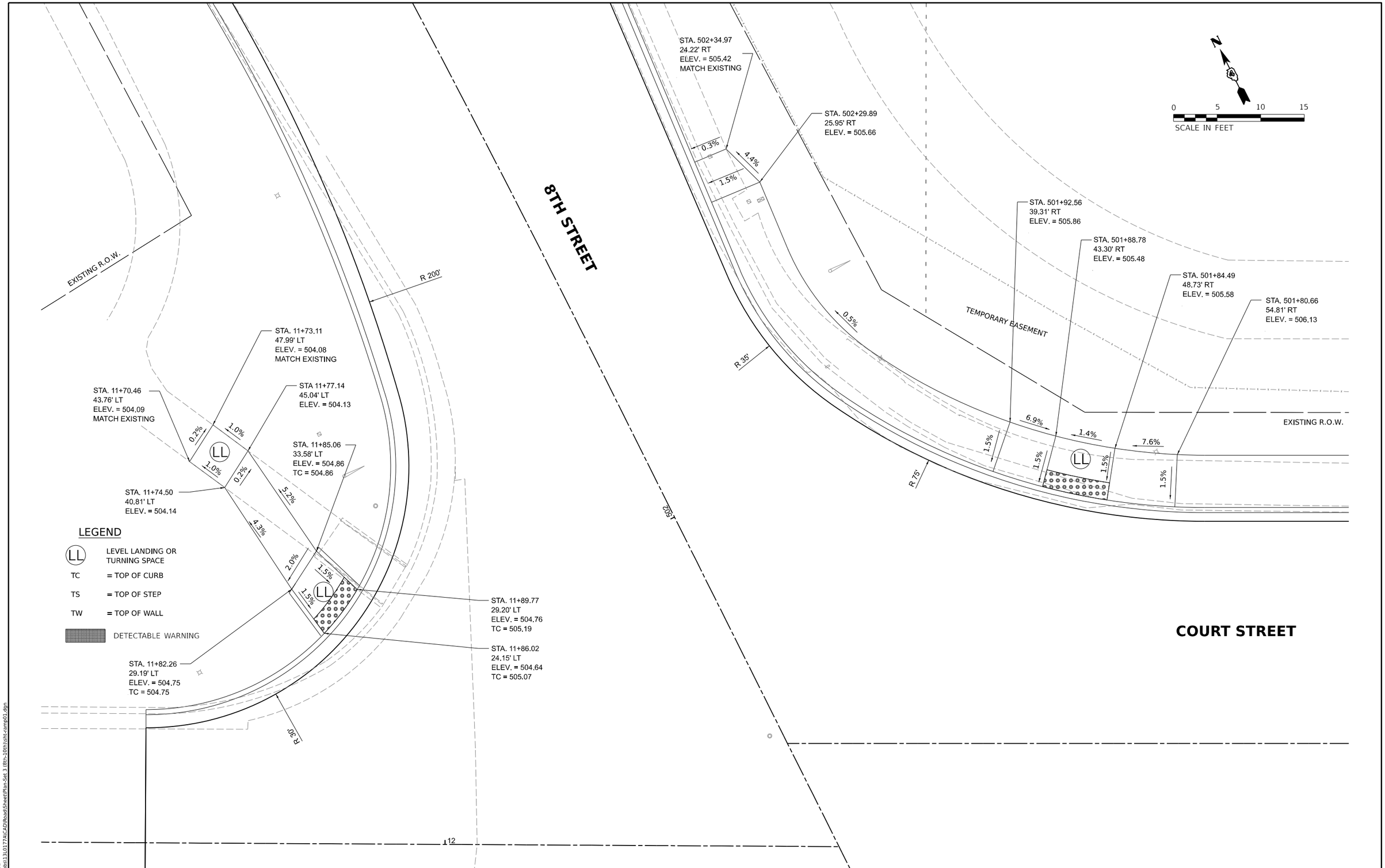

© Copyright Hanson Professional Services Inc. 2025

HANSON
Hanson Professional Services Inc.

DESIGNED	JFC	7/26/2023 12:00:00 AM
DRAWN	RLA	7/26/2023 12:00:00 AM
REVIEWED	MGD	10/25/2024 12:00:00 AM

MODEL: sht-ramp01
FILE NAME: I:\13jobs\13L0177A\CADRoad\Sheet\Plan-Set 3 (8th-10th)\sht-ramp01.dgn

Final

USER NAME = ander00846	DESIGNED - SD/JC	REVISED -	
	DRAWN - RA/CL	REVISED -	
PLOT SCALE = 0.16666667 ' / in.	CHECKED - MGD	REVISED -	
PLOT DATE = 3/26/2025	DATE - 10/25/2024 12:00:00 AM	REVISED -	

STATE OF ILLINOIS
DEPARTMENT OF TRANSPORTATION

COURT STREET AND 8TH STREET
SIDEWALK RAMP DETAILS

SCALE: 1" = 5' | SHEET OF SHEETS | STA. TO STA.

F.A.P. RTE.	SECTION	COUNTY	TOTAL SHEETS	SHEET NO.
693	20-00196-01-RS	TAZEWELL	136	74
	13L0177A	CONTRACT NO. 89859		
		ILLINOIS	FED. AID PROJECT	

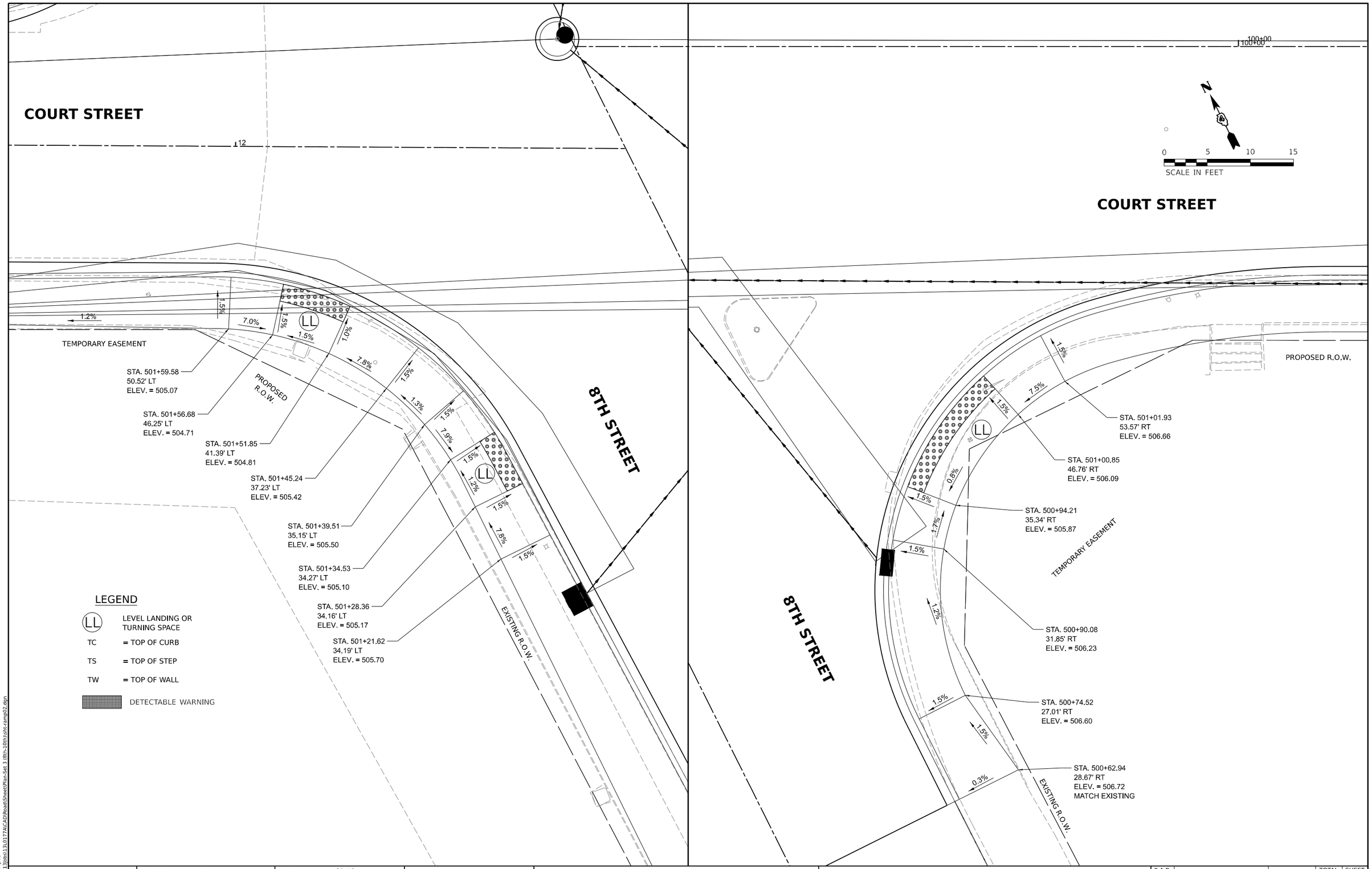

© Copyright Hanson Professional Services Inc. 2025

HANSON
Hanson Professional Services Inc.

DESIGNED	JFC	7/26/2023 12:00:00 AM
DRAWN	RLA	7/26/2023 12:00:00 AM
REVIEWED	MGD	10/25/2024 12:00:00 AM

MODEL: sht-ramp02
FILE NAME: k:\Jobs\13L0177A\CADRoad\Sheet\Plan-Set 3 (8th-10th)\sht-ramp02.dgn

Final	USER NAME = ander00846	DESIGNED - SD/JC	REVISED -	
		DRAWN - RA/CL	REVISED -	
	PLOT SCALE = 0.16666667 ' / in.	CHECKED - MGD	REVISED -	
	PLOT DATE = 3/26/2025	DATE - 10/25/2024 12:00:00 AM	REVISED -	

STATE OF ILLINOIS
DEPARTMENT OF TRANSPORTATION

COURT STREET AND 8TH STREET
SIDEWALK RAMP DETAILS

SCALE: 1" = 5' | SHEET OF SHEETS | STA. TO STA.

F.A.P. RTE.	SECTION	COUNTY	TOTAL SHEETS	SHEET NO.
693	20-00196-01-RS	TAZEWELL	136	75
	13L0177A	CONTRACT NO. 89859		
		ILLINOIS	FED. AID PROJECT	

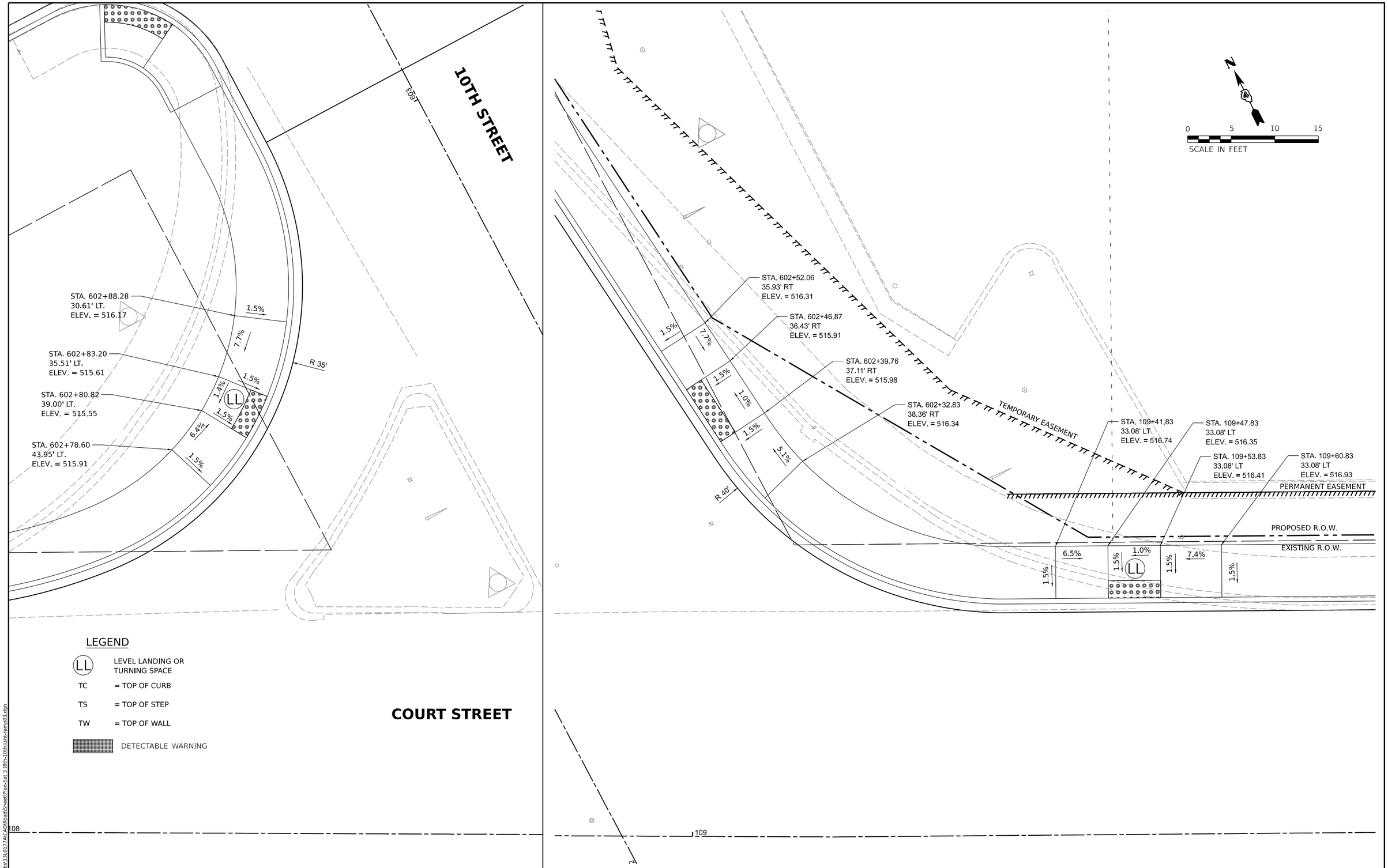

© Copyright Hanson Professional Services Inc. 2025

HANSON
Hanson Professional Services Inc.

DESIGNED	JFC	7/26/2023 12:00:00 AM
DRAWN	RLA	7/26/2023 12:00:00 AM
REVIEWED	MGD	10/25/2024 12:00:00 AM

MODEL: sht-ramp03
FILE NAME: K:\13Jobs\13L0177A\CADRoadSheets\Plan-Set 3 (6th-10th)\sht-ramp03.dgn

Final

USER NAME	= ander00846	DESIGNED -	SD/JC	REVISED	-
		DRAWN -	RA/CL	REVISED	-
PLOT SCALE	= 0.16666667 ' / in.	CHECKED -	MGD	REVISED	-
PLOT DATE	= 3/26/2025	DATE -	10/25/2024 12:00:00 AM	REVISED	-

STATE OF ILLINOIS
DEPARTMENT OF TRANSPORTATION

COURT STREET AND 10TH STREET
SIDEWALK RAMP DETAILS

SCALE: 1" = 5' | SHEET OF SHEETS | STA. TO STA.

F.A.P. RTE.	SECTION	COUNTY	TOTAL SHEETS	SHEET NO.
693	20-00196-01-RS	TAZEWELL	136	76
	13L0177A	CONTRACT NO. 89859		
	ILLINOIS	FED. AID PROJECT		

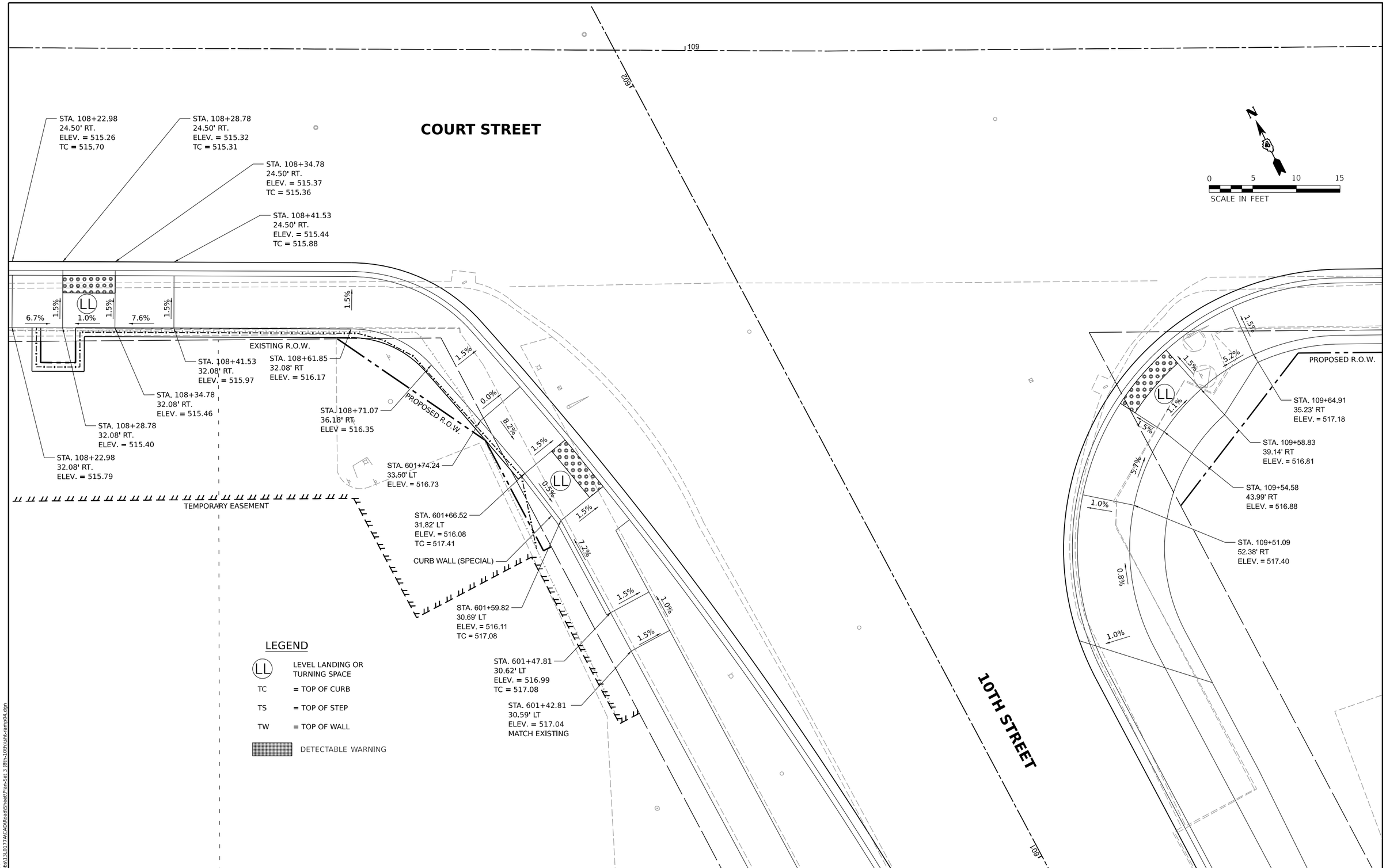

© Copyright Hanson Professional Services Inc. 2025

HANSON
Hanson Professional Services Inc.

DESIGNED	JFC	7/26/2023 12:00:00 AM
DRAWN	RLA	7/26/2023 12:00:00 AM
REVIEWED	MGD	10/25/2024 12:00:00 AM

MODE: sht-ramp04
FILE NAME: K:\13Jobs\13L0177A\CADRoadSheet\Plan-Set 3 (8th-10th)\sht-ramp04.dgn

Final

USER NAME = ander00846	DESIGNED - SD/JC	REVISED -	
	DRAWN - RA/CL	REVISED -	
PLOT SCALE = 0.16666667 ' / in.	CHECKED - MGD	REVISED -	
PLOT DATE = 3/26/2025	DATE - 10/25/2024 12:00:00 AM	REVISED -	

STATE OF ILLINOIS
DEPARTMENT OF TRANSPORTATION

COURT STREET AND 10TH STREET
SIDEWALK RAMP DETAILS

SCALE: 1" = 5' | SHEET OF SHEETS | STA. TO STA.

F.A.P. RTE.	SECTION	COUNTY	TOTAL SHEETS	SHEET NO.
693	20-00196-01-RS	TAZEWELL	136	77
	13L0177A	CONTRACT NO. 89859		
	ILLINOIS	FED. AID PROJECT		

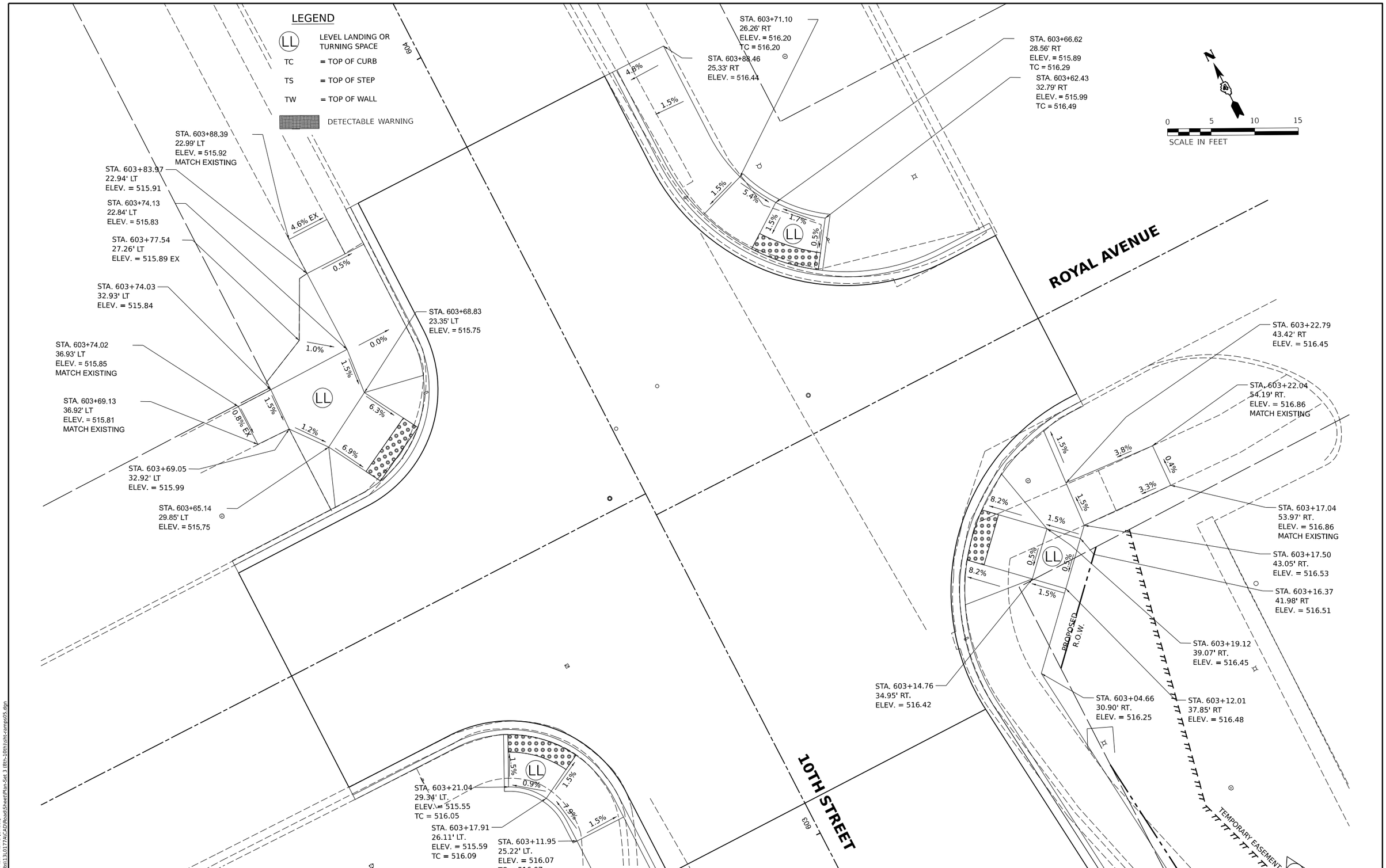

© Copyright Hanson Professional Services Inc. 2025

HANSON
Hanson Professional Services Inc.

DESIGNED	JFC	7/26/2023 12:00:00 AM
DRAWN	RLA	7/26/2023 12:00:00 AM
REVIEWED	MGD	10/25/2024 12:00:00 AM

MODEL: Unnamed Plan - Plan 5 [Sheet]
FILE NAME: K:\Jobs\13L0177A\CAD\Road\Sheet\Plan-Set 3 (8th-10th)\sht-ramp05.dgn

Final

USER NAME = ander00846	DESIGNED - SD/JC	REVISED -	
	DRAWN - RA/CL	REVISED -	
PLOT SCALE = 0.16666667 ' / in.	CHECKED - MGD	REVISED -	
PLOT DATE = 3/26/2025	DATE - 10/25/2024 12:00:00 AM	REVISED -	

STATE OF ILLINOIS
DEPARTMENT OF TRANSPORTATION

10TH STREET AND ROYAL AVENUE
SIDEWALK RAMP DETAILS

SCALE: 1" = 5' | SHEET OF SHEETS | STA. TO STA.

F.A.P. RTE.	SECTION	COUNTY	TOTAL SHEETS	SHEET NO.
693	20-00196-01-RS	TAZEWELL	136	78
	13L0177A	CONTRACT NO. 89859		
		ILLINOIS	FED. AID PROJECT	

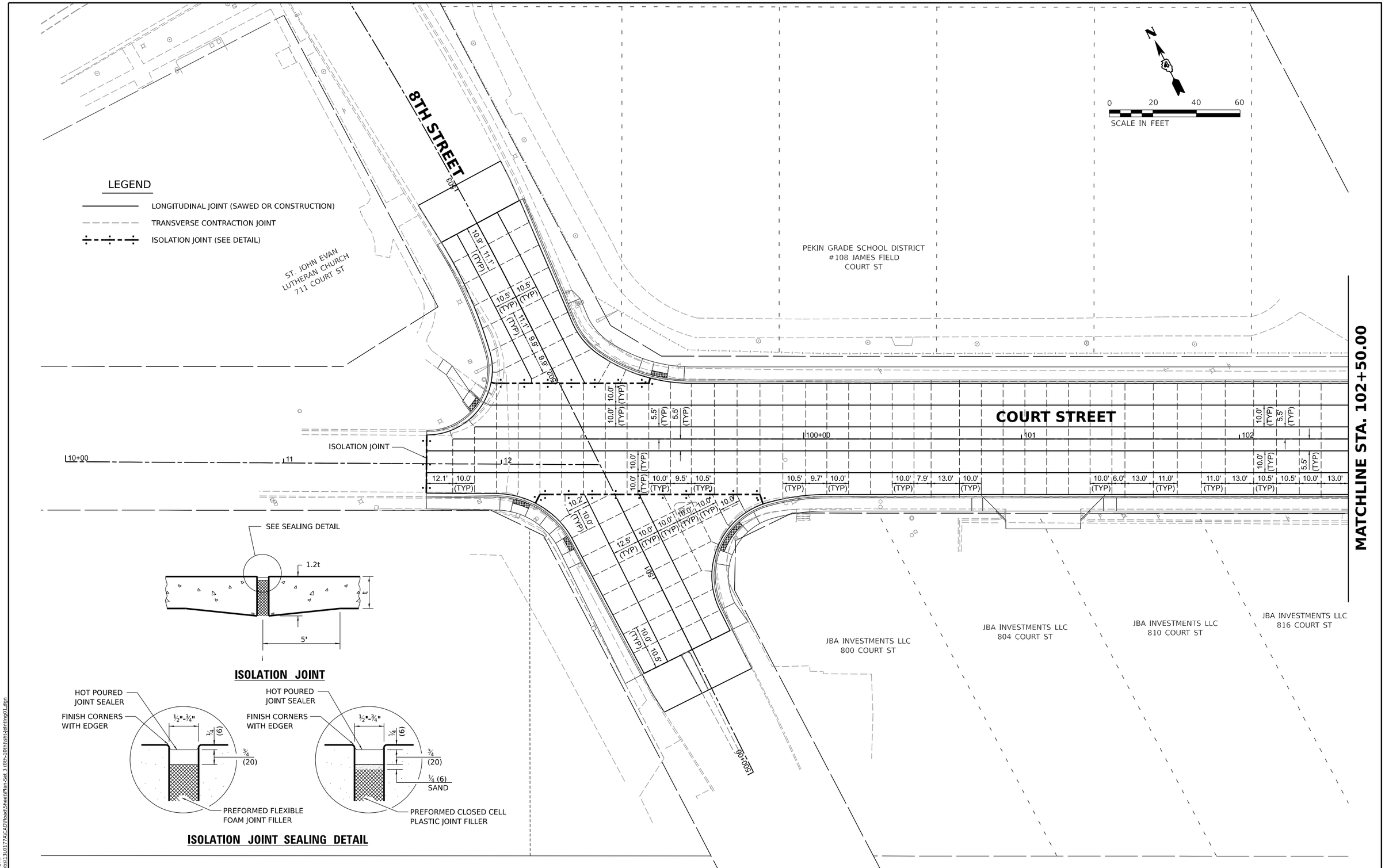

© Copyright Hanson Professional Services Inc. 2025

HANSON
Hanson Professional Services Inc.

DESIGNED	JFC	7/26/2023 12:00:00 AM
DRAWN	RLA	7/26/2023 12:00:00 AM
REVIEWED	MB	10/25/2024 12:00:00 AM

MODEL: sht-jointing01
FILE NAME: K:\13Jobs\13L0177A\CAD\RoadSheet\Plan-Set 3 (8th-10th)\sht-jointing01.dgn

Final

USER NAME = ander00846	DESIGNED - SD/JC	REVISED -	
	DRAWN - RA/CL	REVISED -	
PLOT SCALE = 0.16666667 ' / in.	CHECKED - MB	REVISED -	
PLOT DATE = 3/26/2025	DATE - 10/25/2024 12:00:00 AM	REVISED -	

STATE OF ILLINOIS
DEPARTMENT OF TRANSPORTATION

COURT STREET
JOINTING PLANS

SCALE: 1" = 20' | SHEET OF SHEETS | STA. TO STA.

F.A.P. RTE.	SECTION	COUNTY	TOTAL SHEETS	SHEET NO.
693	20-00196-01-RS	TAZEWELL	136	79
	13L0177A	CONTRACT NO. 89859		
	ILLINOIS	FED. AID PROJECT		

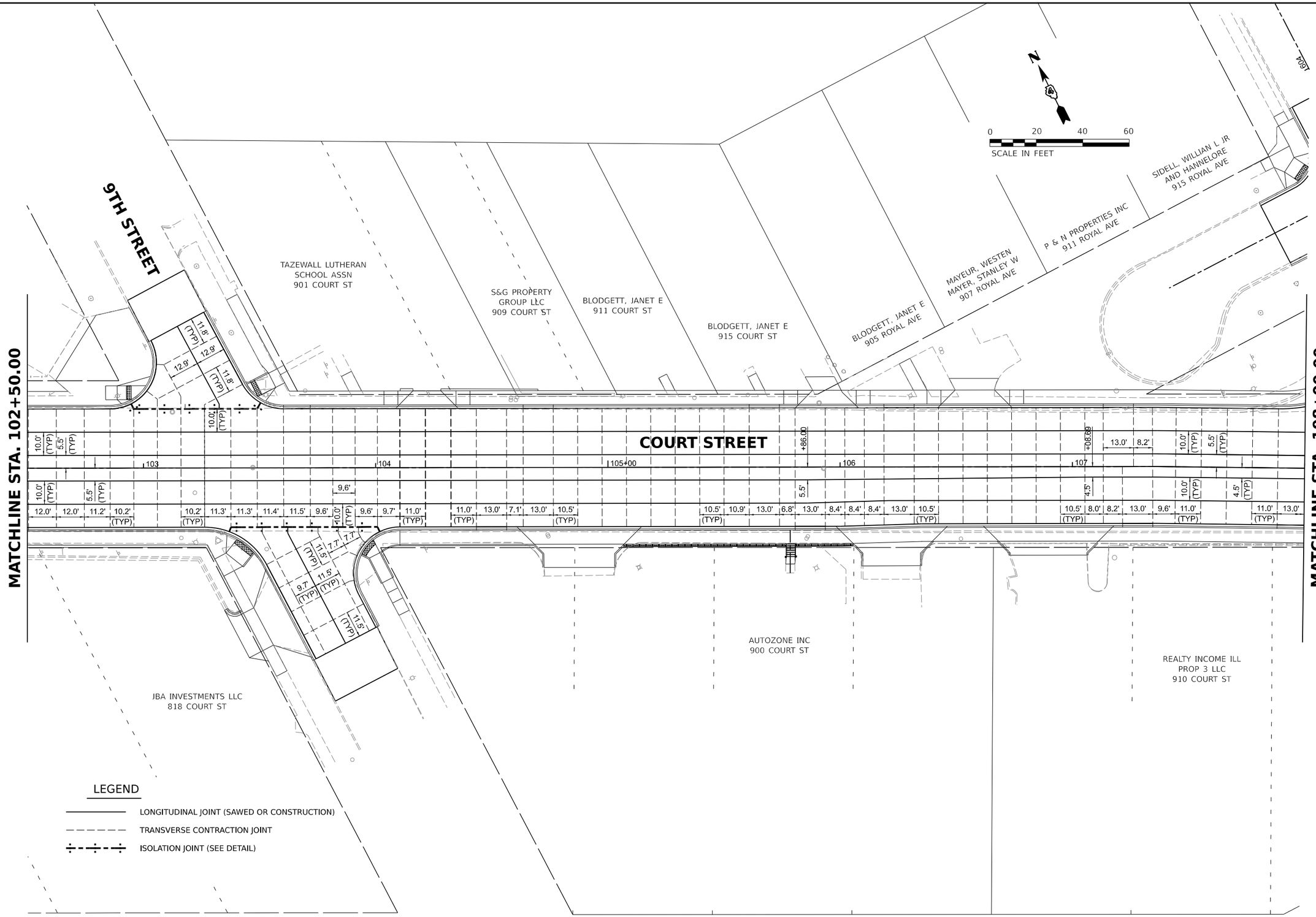

© Copyright Hanson Professional Services Inc. 2025

HANSON
Hanson Professional Services Inc.

DESIGNED	JFC	7/26/2023 12:00:00 AM
DRAWN	RLA	7/26/2023 12:00:00 AM
REVIEWED	MB	10/25/2024 12:00:00 AM

MODEL: sht-jointing02
FILE NAME: K:\13Jobs\13L0177A\CAD\RoadSheet\Plan-Set 3 (6th-10th)\sht-jointing02.dgn

Final

USER NAME = ander00846	DESIGNED - SD/JC	REVISED -	
	DRAWN - RA/CL	REVISED -	
PLOT SCALE = 0.16666667 ' / in.	CHECKED - MB	REVISED -	
PLOT DATE = 3/26/2025	DATE - 10/25/2024 12:00:00 AM	REVISED -	

STATE OF ILLINOIS
DEPARTMENT OF TRANSPORTATION

COURT STREET
JOINTING PLANS

SCALE: 1" = 20' | SHEET OF SHEETS | STA. TO STA.

F.A.P. RTE.	SECTION	COUNTY	TOTAL SHEETS	SHEET NO.
693	20-00196-01-RS	TAZEWELL	136	80
	13L0177A	CONTRACT NO. 89859		
	ILLINOIS	FED. AID PROJECT		

© Copyright Hanson Professional Services Inc. 2025
HANSON
Hanson Professional Services Inc.

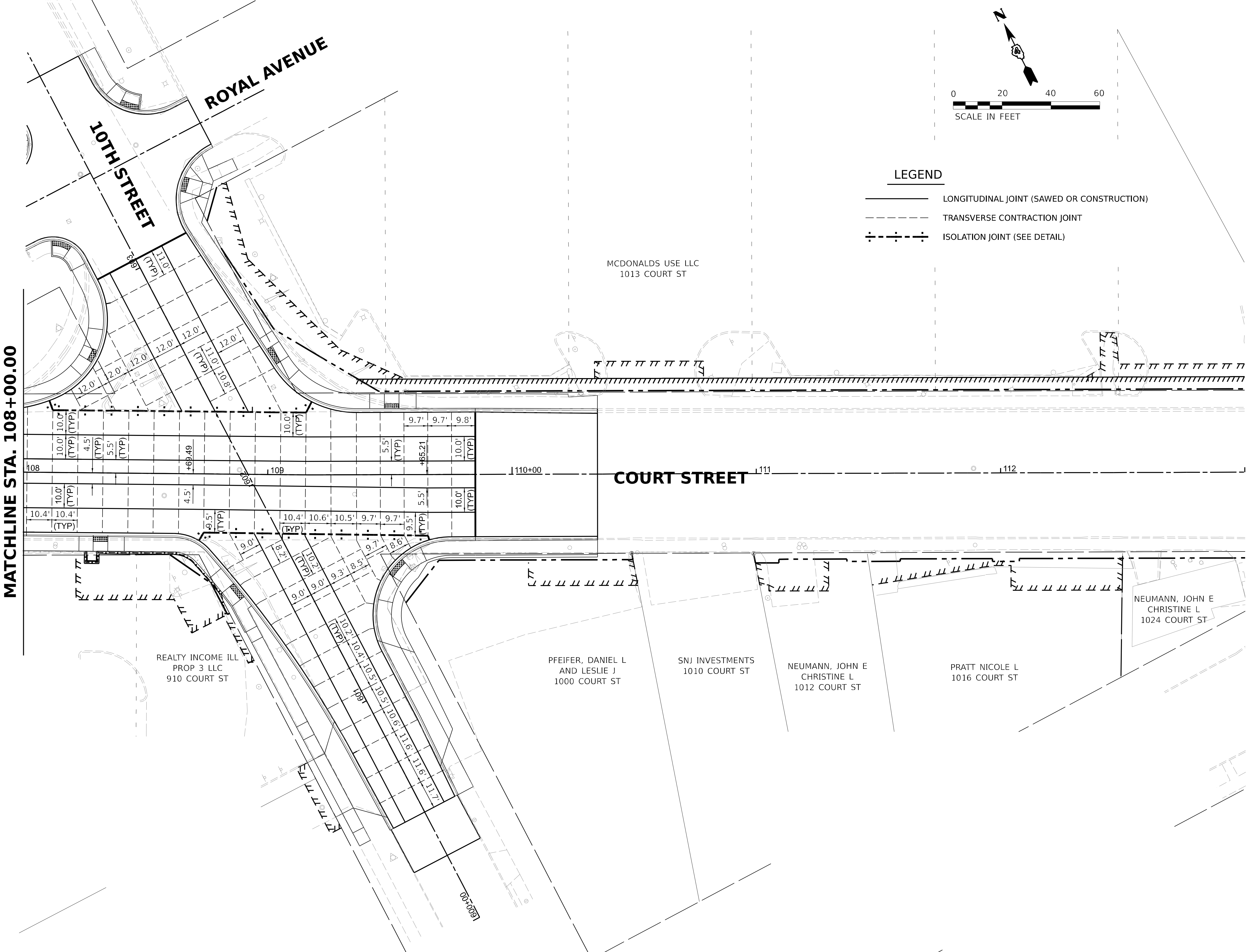

DESIGNED	JFC	7/26/2023 12:00:00 AM
DRAWN	RLA	7/26/2023 12:00:00 AM
REVIEWED	MB	10/25/2024 12:00:00 AM

MODEL: sht-jointing03
FILE NAME: I:\13jobs\13L0177A\CAD\Road\Sheet\Plan-Set 3 (8th-10th)\sht-jointing03.dgn

Final	USER NAME = ander00846	DESIGNED - SD/JC	REVISED -
		DRAWN - RA/CL	REVISED -
	PLOT SCALE = 0.16666667 ' / in.	CHECKED - MB	REVISED -
	PLOT DATE = 3/26/2025	DATE - 10/25/2024 12:00:00 AM	REVISED -

STATE OF ILLINOIS
DEPARTMENT OF TRANSPORTATION

COURT STREET
JOINTING PLANS

SCALE: 1" = 20' | SHEET OF SHEETS | STA. TO STA.

F.A.P. RTE.	SECTION	COUNTY	TOTAL SHEETS	SHEET NO.
693	20-00196-01-RS	TAZEWELL	136	81
	13L0177A	CONTRACT NO. 89859		
	ILLINOIS	FED. AID PROJECT		

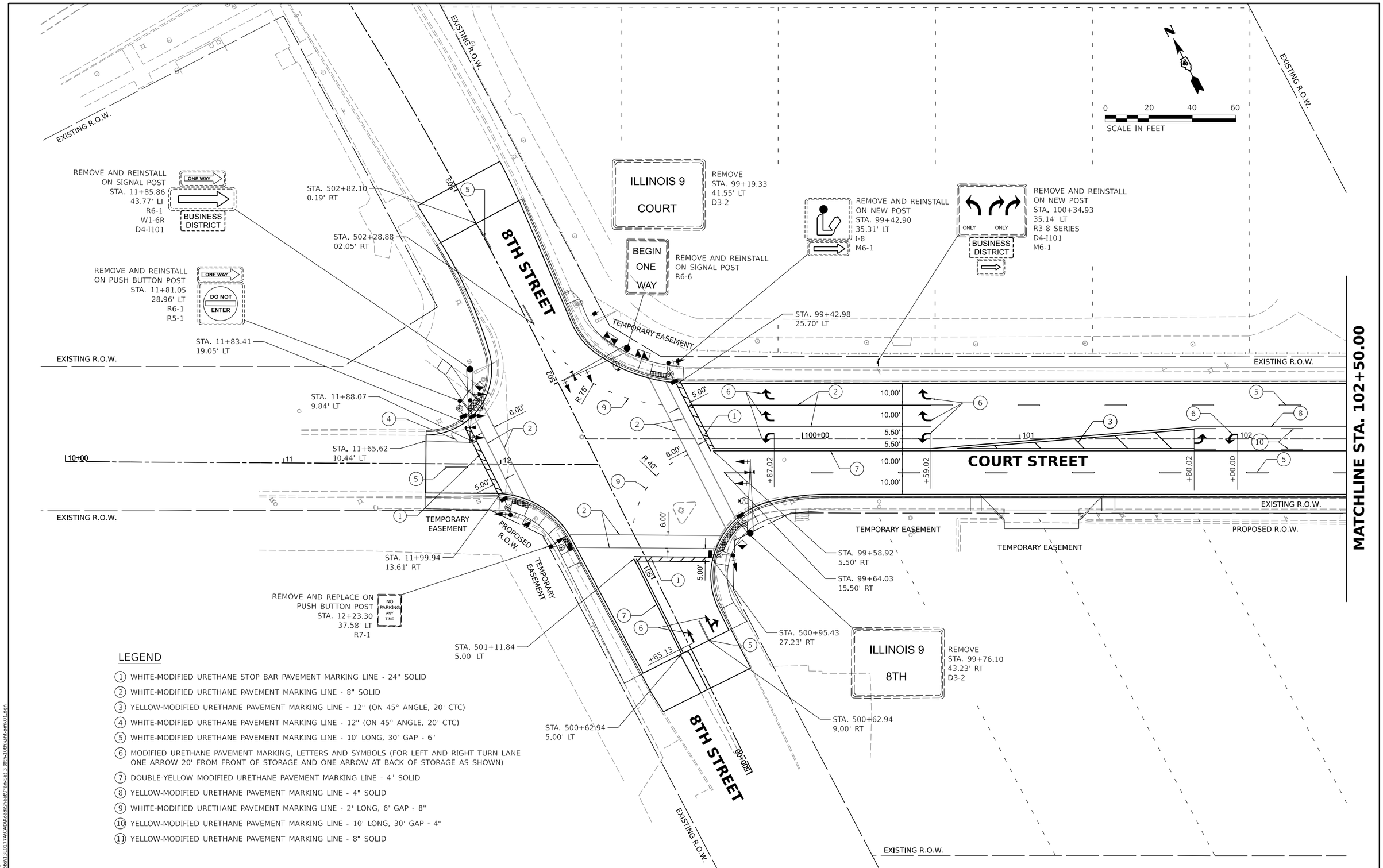

LEGEND

1. WHITE-MODIFIED URETHANE STOP BAR PAVEMENT MARKING LINE - 24" SOLID
2. WHITE-MODIFIED URETHANE PAVEMENT MARKING LINE - 8" SOLID
3. YELLOW-MODIFIED URETHANE PAVEMENT MARKING LINE - 12" (ON 45° ANGLE, 20' CTC)
4. WHITE-MODIFIED URETHANE PAVEMENT MARKING LINE - 12" (ON 45° ANGLE, 20' CTC)
5. WHITE-MODIFIED URETHANE PAVEMENT MARKING LINE - 10' LONG, 30' GAP - 6"
6. MODIFIED URETHANE PAVEMENT MARKING, LETTERS AND SYMBOLS (FOR LEFT AND RIGHT TURN LANE ONE ARROW 20' FROM FRONT OF STORAGE AND ONE ARROW AT BACK OF STORAGE AS SHOWN)
7. DOUBLE-YELLOW MODIFIED URETHANE PAVEMENT MARKING LINE - 4" SOLID
8. YELLOW-MODIFIED URETHANE PAVEMENT MARKING LINE - 4" SOLID
9. WHITE-MODIFIED URETHANE PAVEMENT MARKING LINE - 2' LONG, 6' GAP - 8"
10. YELLOW-MODIFIED URETHANE PAVEMENT MARKING LINE - 10' LONG, 30' GAP - 4"
11. YELLOW-MODIFIED URETHANE PAVEMENT MARKING LINE - 8" SOLID

© Copyright Hanson Professional Services Inc. 2025

HANSON
Hanson Professional Services Inc.

DESIGNED	JFC	7/26/2023 12:00:00 AM
DRAWN	RLA	7/26/2023 12:00:00 AM
REVIEWED	MGD	10/25/2024 12:00:00 AM

MODEL: sht-pmk01
FILE NAME: k:\Jobs\13L0177A\CAD\Road\Sheet\Plan-Set 3 (8th-10th)\sht-pmk01.dgn

Final

USER NAME = ander00846	DESIGNED - SD/JC	REVISED -	
	DRAWN - RA/CL	REVISED -	
PLOT SCALE = 0.16666667 ' / in.	CHECKED - MGD	REVISED -	
PLOT DATE = 3/26/2025	DATE - 10/25/2024 12:00:00 AM	REVISED -	

STATE OF ILLINOIS
DEPARTMENT OF TRANSPORTATION

COURT STREET
PAVEMENT MARKING AND SIGNAGE PLANS

SCALE: 1" = 20' | SHEET OF SHEETS | STA. TO STA.

F.A.P. RTE.	SECTION	COUNTY	TOTAL SHEETS	SHEET NO.
693	20-00196-01-RS	TAZEWELL	136	82
	13L0177A	CONTRACT NO. 89859		
	ILLINOIS	FED. AID PROJECT		

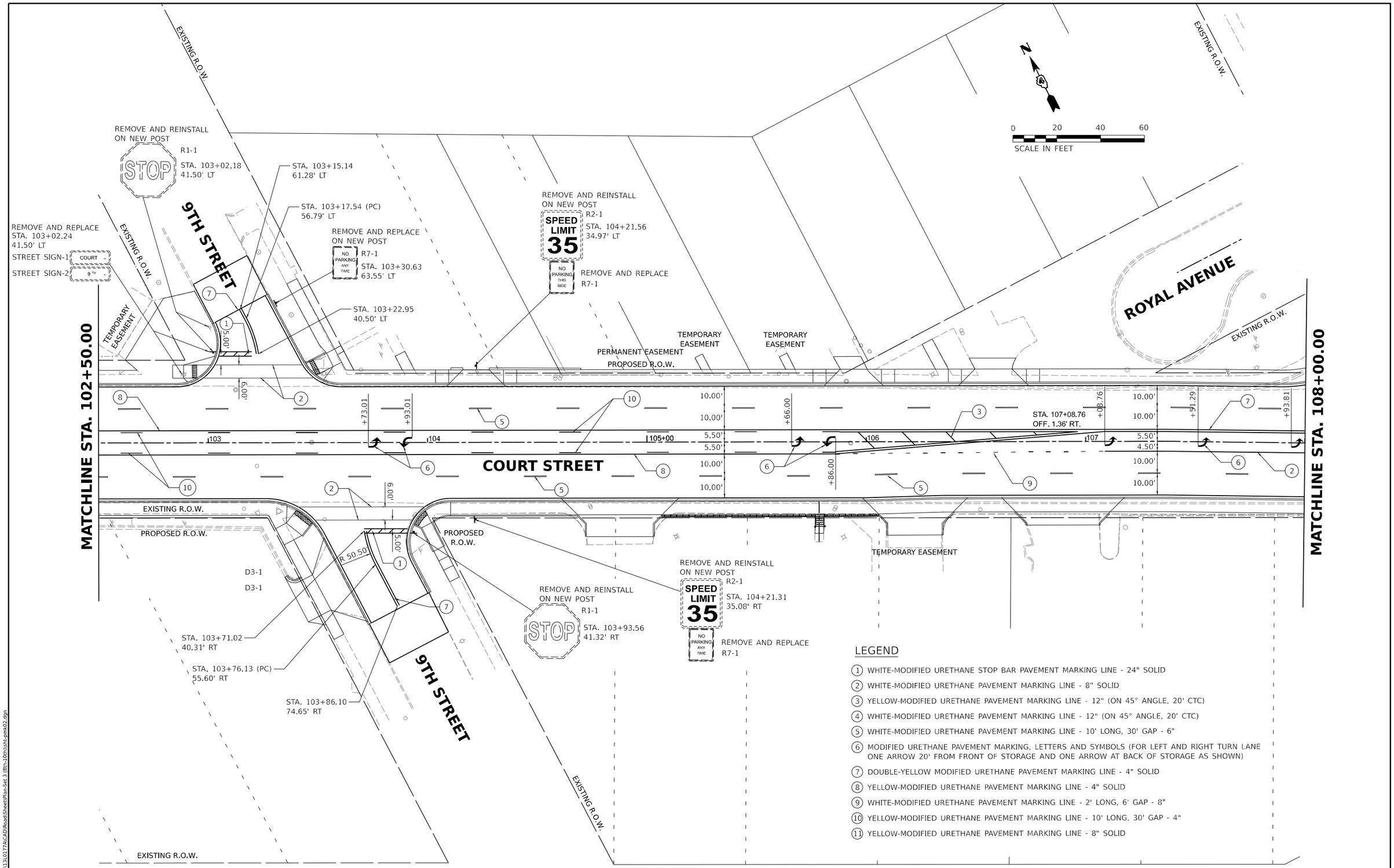

LEGEND

1. WHITE-MODIFIED URETHANE STOP BAR PAVEMENT MARKING LINE - 24" SOLID
2. WHITE-MODIFIED URETHANE PAVEMENT MARKING LINE - 8" SOLID
3. YELLOW-MODIFIED URETHANE PAVEMENT MARKING LINE - 12" (ON 45° ANGLE, 20' CTC)
4. WHITE-MODIFIED URETHANE PAVEMENT MARKING LINE - 12" (ON 45° ANGLE, 20' CTC)
5. WHITE-MODIFIED URETHANE PAVEMENT MARKING LINE - 10' LONG, 30' GAP - 6"
6. MODIFIED URETHANE PAVEMENT MARKING, LETTERS AND SYMBOLS (FOR LEFT AND RIGHT TURN LANE ONE ARROW 20' FROM FRONT OF STORAGE AND ONE ARROW AT BACK OF STORAGE AS SHOWN)
7. DOUBLE-YELLOW MODIFIED URETHANE PAVEMENT MARKING LINE - 4" SOLID
8. YELLOW-MODIFIED URETHANE PAVEMENT MARKING LINE - 4" SOLID
9. WHITE-MODIFIED URETHANE PAVEMENT MARKING LINE - 2' LONG, 6' GAP - 8"
10. YELLOW-MODIFIED URETHANE PAVEMENT MARKING LINE - 10' LONG, 30' GAP - 4"
11. YELLOW-MODIFIED URETHANE PAVEMENT MARKING LINE - 8" SOLID

© Copyright Hanson Professional Services Inc. 2025

HANSON
Hanson Professional Services Inc.

DESIGNED	JFC	7/26/2023 12:00:00 AM
DRAWN	RLA	7/26/2023 12:00:00 AM
REVIEWED	MGD	10/25/2024 12:00:00 AM

MODEL: sht-pmk02
FILE NAME: k:\3jobs\13L0177A\CADRoad\Sheet\Plan-Set 3 (8th-10th)\sht-pmk02.dgn

Final

USER NAME = ander00846	DESIGNED - SD/JC	REVISED -	
	DRAWN - RA/CL	REVISED -	
PLOT SCALE = 0.16666667 ' / in.	CHECKED - MGD	REVISED -	
PLOT DATE = 3/26/2025	DATE - 10/25/2024 12:00:00 AM	REVISED -	

STATE OF ILLINOIS
DEPARTMENT OF TRANSPORTATION

COURT STREET
PAVEMENT MARKING AND SIGNAGE PLANS

SCALE: 1" = 20' | SHEET OF SHEETS | STA. TO STA.

F.A.P. RTE.	SECTION	COUNTY	TOTAL SHEETS	SHEET NO.
693	20-00196-01-RS	TAZEWELL	136	83
	13L0177A	CONTRACT NO. 89859		
	ILLINOIS	FED. AID PROJECT		

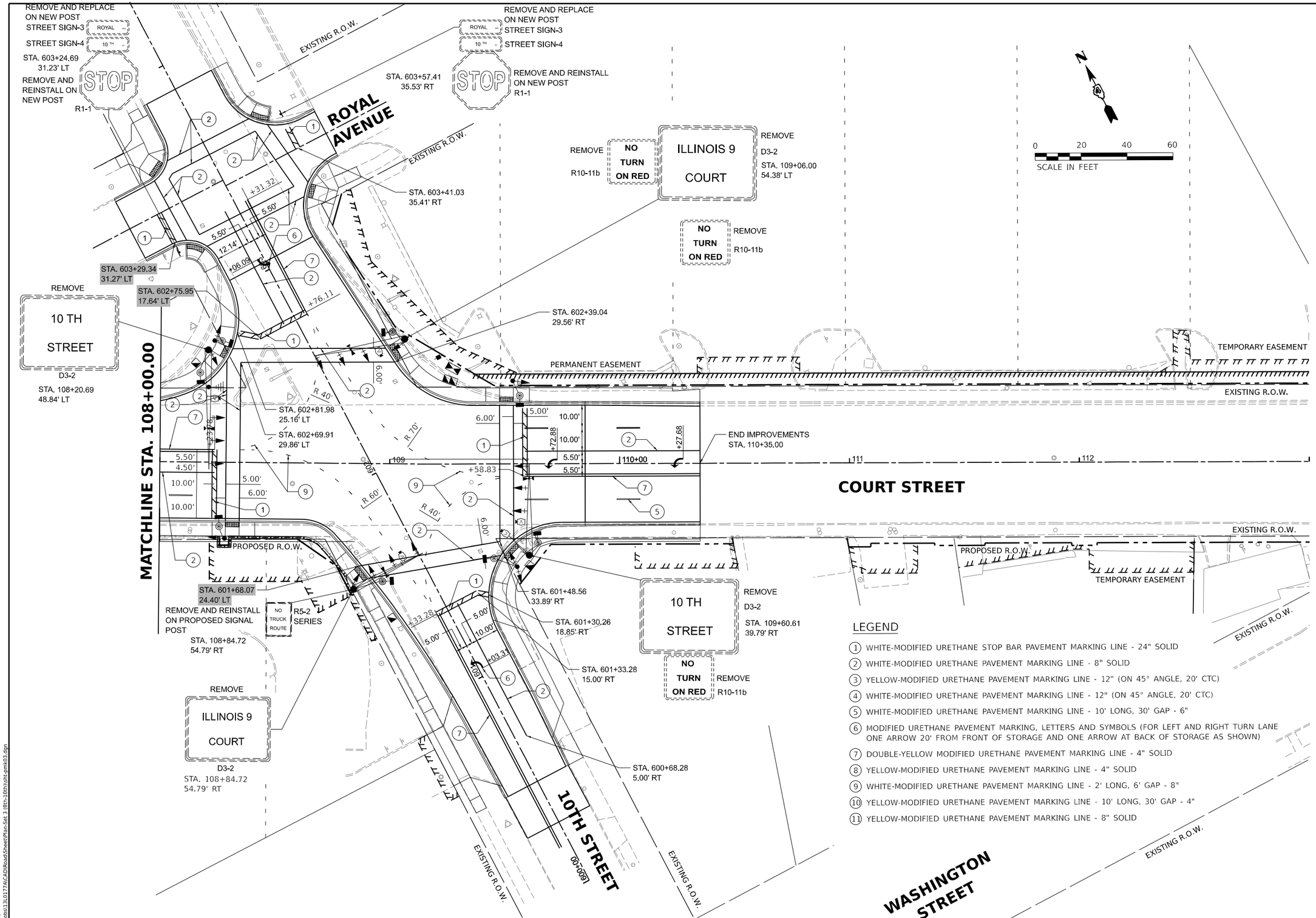

LEGEND

1. WHITE-MODIFIED URETHANE STOP BAR PAVEMENT MARKING LINE - 24" SOLID
2. WHITE-MODIFIED URETHANE PAVEMENT MARKING LINE - 8" SOLID
3. YELLOW-MODIFIED URETHANE PAVEMENT MARKING LINE - 12" (ON 45° ANGLE, 20' CTC)
4. WHITE-MODIFIED URETHANE PAVEMENT MARKING LINE - 12" (ON 45° ANGLE, 20' CTC)
5. WHITE-MODIFIED URETHANE PAVEMENT MARKING LINE - 10' LONG, 30' GAP - 6"
6. MODIFIED URETHANE PAVEMENT MARKING, LETTERS AND SYMBOLS (FOR LEFT AND RIGHT TURN LANE ONE ARROW 20' FROM FRONT OF STORAGE AND ONE ARROW AT BACK OF STORAGE AS SHOWN)
7. DOUBLE-YELLOW MODIFIED URETHANE PAVEMENT MARKING LINE - 4" SOLID
8. YELLOW-MODIFIED URETHANE PAVEMENT MARKING LINE - 4" SOLID
9. WHITE-MODIFIED URETHANE PAVEMENT MARKING LINE - 2' LONG, 6' GAP - 8"
10. YELLOW-MODIFIED URETHANE PAVEMENT MARKING LINE - 10' LONG, 30' GAP - 4"
11. YELLOW-MODIFIED URETHANE PAVEMENT MARKING LINE - 8" SOLID

© Copyright Hanson Professional Services Inc. 2025

HANSON
Hanson Professional Services Inc.

DESIGNED	JFC	7/26/2023 12:00:00 AM
DRAWN	RLA	7/26/2023 12:00:00 AM
REVIEWED	MGD	10/25/2024 12:00:00 AM

MODEL: sht-pmk03
FILE NAME: ...\13L0177A\CAD\Road\Sheet\Plan-Set 3 (8ts-10th)\sht-pmk03.dgn

Final

USER NAME = ander00846	DESIGNED - SD/JC	REVISED -	
	DRAWN - RA/CL	REVISED -	
PLOT SCALE = 0.16666667 ' / in.	CHECKED - MGD	REVISED -	
PLOT DATE = 3/26/2025	DATE - 10/25/2024 12:00:00 AM	REVISED -	

STATE OF ILLINOIS
DEPARTMENT OF TRANSPORTATION

COURT STREET
PAVEMENT MARKING AND SIGNAGE PLANS

SCALE: 1" = 20' | SHEET OF SHEETS | STA. TO STA.

F.A.P. RTE.	SECTION	COUNTY	TOTAL SHEETS	SHEET NO.
693	20-00196-01-RS	TAZEWELL	136	84
	13L0177A	CONTRACT NO. 89859		

ILLINOIS | FED. AID PROJECT

POST DATA

NO.	STATION	OFFSET
P1	99+38	42' LT
P2	98+43	35' LT
P3	98+77	45' RT
P4	99+83	47' RT

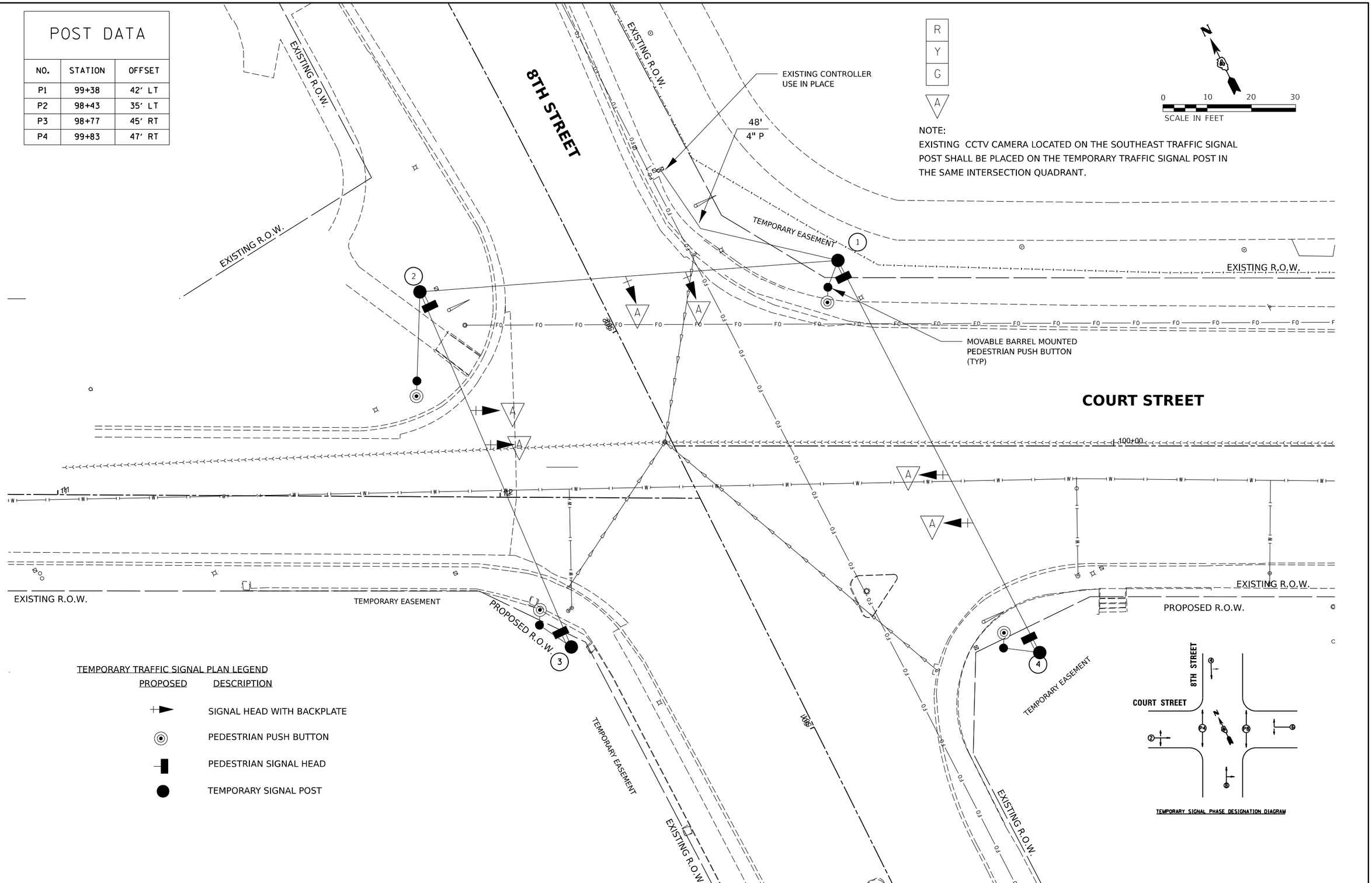

NOTE:
EXISTING CCTV CAMERA LOCATED ON THE SOUTHEAST TRAFFIC SIGNAL POST SHALL BE PLACED ON THE TEMPORARY TRAFFIC SIGNAL POST IN THE SAME INTERSECTION QUADRANT.

TEMPORARY TRAFFIC SIGNAL PLAN LEGEND

PROPOSED	DESCRIPTION
	SIGNAL HEAD WITH BACKPLATE
	PEDESTRIAN PUSH BUTTON
	PEDESTRIAN SIGNAL HEAD
	TEMPORARY SIGNAL POST

© Copyright Hanson Professional Services Inc. 2025

HANSON
Hanson Professional Services Inc.

DESIGNED	JFC	7/26/2023 12:00:00 AM
DRAWN	RLA	7/26/2023 12:00:00 AM
REVIEWED	MGD	7/26/2023 12:00:00 AM

MODEL: sht-signal01
FILE NAME: k:\3jobs\13L0177A\CAD\Road\Sheet\Plan-Set 3 (8th-10th)\sht-signal_Temp_01.dgn

Final

USER NAME = ander00846	DESIGNED - TMA	REVISED -	
	DRAWN - TMA	REVISED -	
PLOT SCALE = 0.166667 ' / in.	CHECKED - EMS	REVISED -	
PLOT DATE = 3/26/2025	DATE - 10/25/2024 12:00:00 AM	REVISED -	

STATE OF ILLINOIS
DEPARTMENT OF TRANSPORTATION

COURT STREET AND 8TH STREET
TEMPORARY TRAFFIC SIGNAL PLANS

SCALE: 1" = 10' | SHEET OF SHEETS | STA. TO STA.

F.A.P. RTE.	SECTION	COUNTY	TOTAL SHEETS	SHEET NO.
693	20-00196-01-RS	TAZEWELL	136	85
	13L0177A	CONTRACT NO. 89859		
		ILLINOIS	FED. AID PROJECT	

HANDHOLE DATA

NO.	STATION	OFFSET
A	99+27	39' LT
B	99+72	49' RT
C	12+12	27' RT
D	11+90	36' LT

POST AND MAST ARM DATA

NO.	STATION	OFFSET
C1	99+27	46' LT
P1	99+19	42' LT
P2	99+38	35' LT
P3	99+76	43' RT
P4	99+68	54' RT
P5	12+23	38' RT
P6	12+05	23' RT
P7	11+81	29' LT
P8	11+86	44' LT

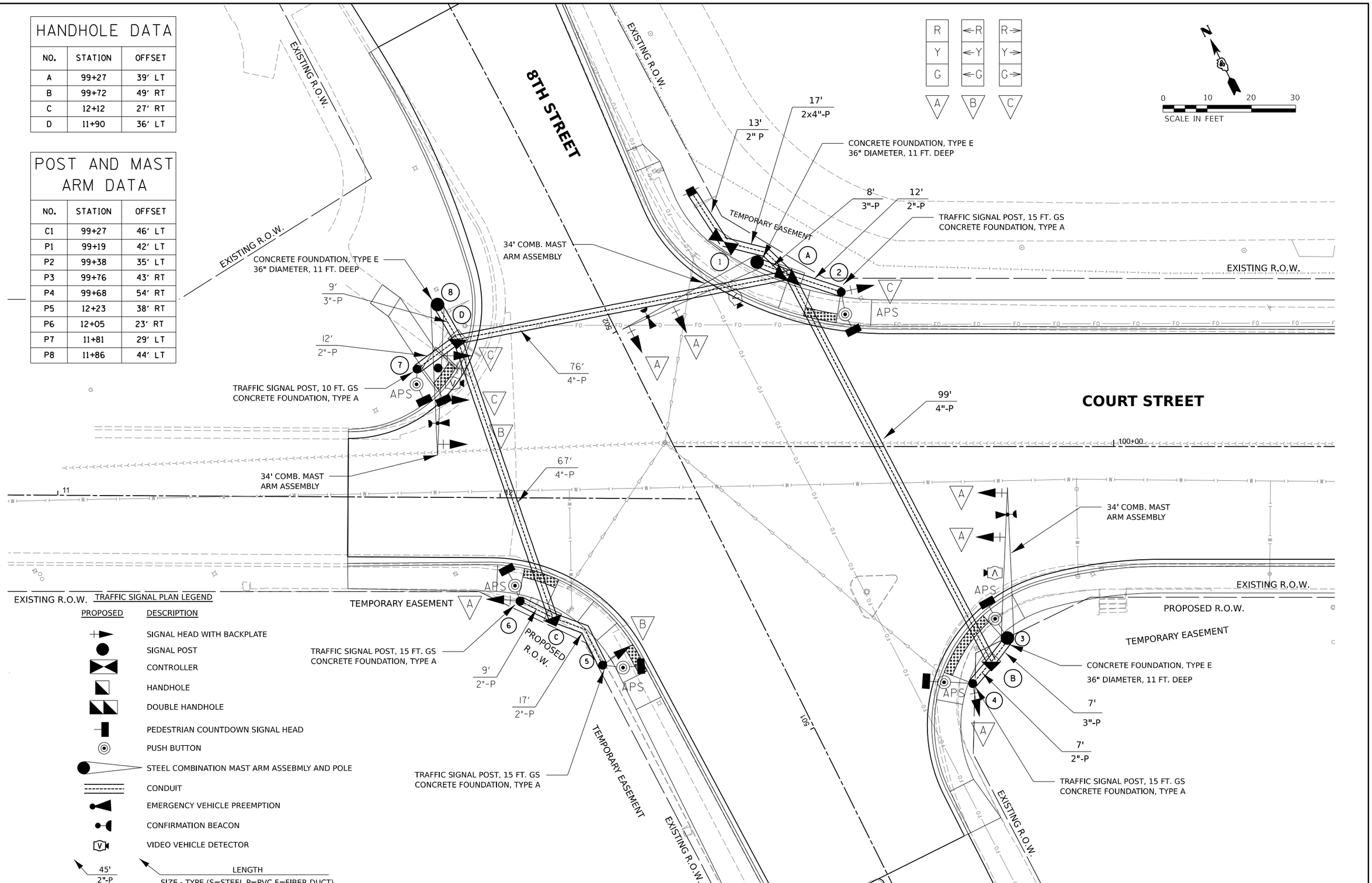

TRAFFIC SIGNAL PLAN LEGEND

PROPOSED	DESCRIPTION
	SIGNAL HEAD WITH BACKPLATE
	SIGNAL POST
	CONTROLLER
	HANDHOLE
	DOUBLE HANDHOLE
	PEDESTRIAN COUNTDOWN SIGNAL HEAD
	PUSH BUTTON
	STEEL COMBINATION MAST ARM ASSEBMLY AND POLE
	CONDUIT
	EMERGENCY VEHICLE PREEMPTION
	CONFIRMATION BEACON
	VIDEO VEHICLE DETECTOR

45' / 2"-P — LENGTH / SIZE - TYPE (S=STEEL P=PVC F=FIBER DUCT)

© Copyright Hanson Professional Services Inc. 2025

HANSON
Hanson Professional Services Inc.

DESIGNED	JFC	7/26/2023 12:00:00 AM
DRAWN	RLA	7/26/2023 12:00:00 AM
REVIEWED	MGD	7/26/2023 12:00:00 AM

MODEL: sht-signal01
FILE NAME: I:\13Jobs\13L0177A\CAD\Road\Sheet\Plan-Set 3 (8th-10th)\sht-signal01.dgn

Final

USER NAME = ander00846	DESIGNED - EMS	REVISED -	
	DRAWN - EMS	REVISED -	
PLOT SCALE = 0.166667 ' / in.	CHECKED - TMA	REVISED -	
PLOT DATE = 3/26/2025	DATE - 10/25/2024 12:00:00 AM	REVISED -	

STATE OF ILLINOIS
DEPARTMENT OF TRANSPORTATION

COURT STREET AND 8TH STREET
TRAFFIC SIGNAL PLANS

SCALE: 1" = 10' | SHEET OF SHEETS | STA. TO STA.

F.A.P. RTE.	SECTION	COUNTY	TOTAL SHEETS	SHEET NO.
693	20-00196-01-RS	TAZEWELL	136	86
	13L0177A	CONTRACT NO. 89859		
		ILLINOIS	FED. AID PROJECT	

TRAFFIC SIGNAL GENERAL NOTES

1. ALL TRAFFIC SIGNAL SECTIONS SHALL HAVE 12" SINGLE LED LENSES.
2. ALL PEDESTRIAN SECTIONS SHALL HAVE 16" LENSES WITH A MAN/HAND OVERLAY AND COUNTDOWN TIMER.
3. THE RED SECTIONS OF THE SIGNAL HEADS SHARING THE SAME MAST ARM SHALL BE LEVEL WITH ONE ANOTHER AND MAINTAIN A 16 FT. MINIMUM CLEARANCE FROM THE HIGHEST POINT OF THE ROADWAY TO BOTTOM OF THE SIGNAL BACKPLATE.
4. ALL TRAFFIC SIGNAL HEAD BRACKETS ARE TO BE GALVANIZED STEEL WITH A NATURAL FINISH.
5. ALL TRAFFIC SIGNAL POSTS ARE TO BE GALVANIZED STEEL.
6. PROPOSED HANDHOLES SHALL BE CAST IN PLACE CONCRETE HANDHOLES.
7. THE HANDHOLE SHALL BE CONSTRUCTED SO THAT THE TOP OF THE FRAME WILL BE FLUSH WITH THE SURFACE OF THE MEDIAN, SIDEWALK, OR GROUND LINE.
8. THE LOCATION OF ALL UTILITIES SHALL BE FIELD VERIFIED BY THE CONTRACTOR BEFORE THE INSTALLATION OF ANY TRAFFIC SIGNAL COMPONENTS.
9. THE LOCATIONS FOR HANDHOLES, TRAFFIC SIGNAL POST FOUNDATIONS, AND MAST ARM FOUNDATIONS ARE PROVIDED FOR REFERENCE ONLY. THE ENGINEER SHALL BE NOTIFIED FOR LOCATION VERIFICATION BEFORE INSTALLATION.
10. ALL SURPLUS MATERIALS SHALL BE DISPOSED OF IN ACCORDANCE WITH ARTICLE 202.03 OF THE STANDARD SPECIFICATIONS.
11. NO ADDITIONAL COMPENSATION SHALL BE ALLOWED FOR PLACING CONDUIT AT GREATER THAN 2 FT. MINIMUM DEPTH OR IN AN INDIRECT ROUTE BETWEEN STRUCTURES TO AVOID OBSTACLES SUCH AS UNDERGROUND UTILITIES.

TRAFFIC SIGNAL GENERAL NOTES

12. THE CONTRACTOR IS RESPONSIBLE FOR THE COST OF UNCOVERING OR HAND DIGGING AROUND UTILITIES AS NECESSARY. THIS COST OF THIS WORK SHALL BE INCLUDED IN THE UNIT PRICES FOR THE CONDUITS.
13. ALL TRAFFIC SIGNAL STRUCTURES SHALL BE BONDED IN ACCORDANCE WITH NEC REQUIREMENTS. THIS WORK SHALL BE PAID FOR AT THE CONTRACT UNIT PRICE FOR "ELECTRIC CABLE IN CONDUIT, EQUIPMENT GROUNDING CONDUCTOR, NO. 6 1C" AND SHALL INCLUDE ALL LABOR, EQUIPMENT, AND MATERIALS (INCLUDING CLAMPS, HARDWARE, ELECTRICAL CABLE, AND ALL OTHER ITEMS REQUIRED TO BOND THE STRUCTURES).
14. A 1/2" DIAMETER CONTINUOUS POLYESTER MULE TAPE SHALL BE FURNISHED AND LEFT IN PLACE IN ALL CONDUITS BETWEEN HANDHOLES AND FOUNDATIONS OR CONTROLLER.
15. ELECTRICAL WORK SHALL CONFORM WITH NATIONAL, STATE, AND LOCAL CODES.
16. THE CONTRACTOR SHALL PROVIDE ELECTRICAL CABLE SLACK IN ACCORDANCE WITH ARTICLE 873.03.
17. ELECTRICAL CABLE WILL BE MEASURED FOR PAYMENT IN ACCORDANCE WITH ARTICLE 873.04.
18. COILABLE POLYETHYLENE DUCT MAY BE SUBSTITUTED FOR PVC PUSHED OR TRENCHED.
19. POTHOLING TO LOCATE EXISTING UNDERGROUND UTILITIES SHALL BE INCLUDED IN THE CONTRACT BID PRICE FOR THE CONDUIT PAY ITEMS.
20. THE CONTRACTOR SHALL VERIFY FIELD CONDITIONS PRIOR TO BIDDING. THERE WILL BE NO ADDITIONAL COMPENSATION PAID FOR CLAIMS THAT ARISE FROM A FAILURE TO FULLY INVESTIGATE EXISTING FIELD CONDITIONS.
21. EXISTING SIGNAL(S) TO REMAIN IN OPERATION UNTIL THE NEW SIGNAL IS TURNED ON. SWITCH OVER TO THE NEW SIGNAL SHALL BE DURING AN OFF-PEAK TIME TO ALLOW FOR INTERSECTION TO OPERATE UNSIGNALIZED WHILE CONTROLLER IS WIRED TO NEW SIGNALS. NEW SIGNALS SHALL BE COVERED UNTIL IN OPERATION.
22. ALL PEDESTRIAN PUSH BUTTON SIGNS SHALL BE CONSTRUCTED FROM TYPE ZZ HIGH INTENSITY PRISMATIC SHEETING.

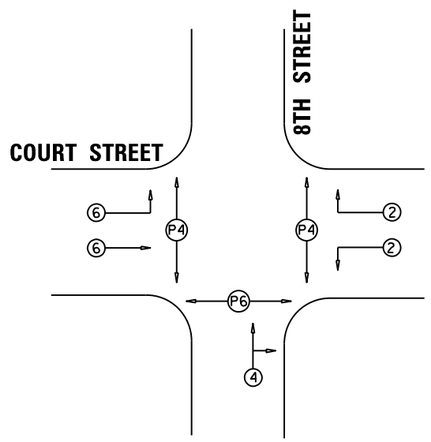

PHASE DESIGNATION DIAGRAM

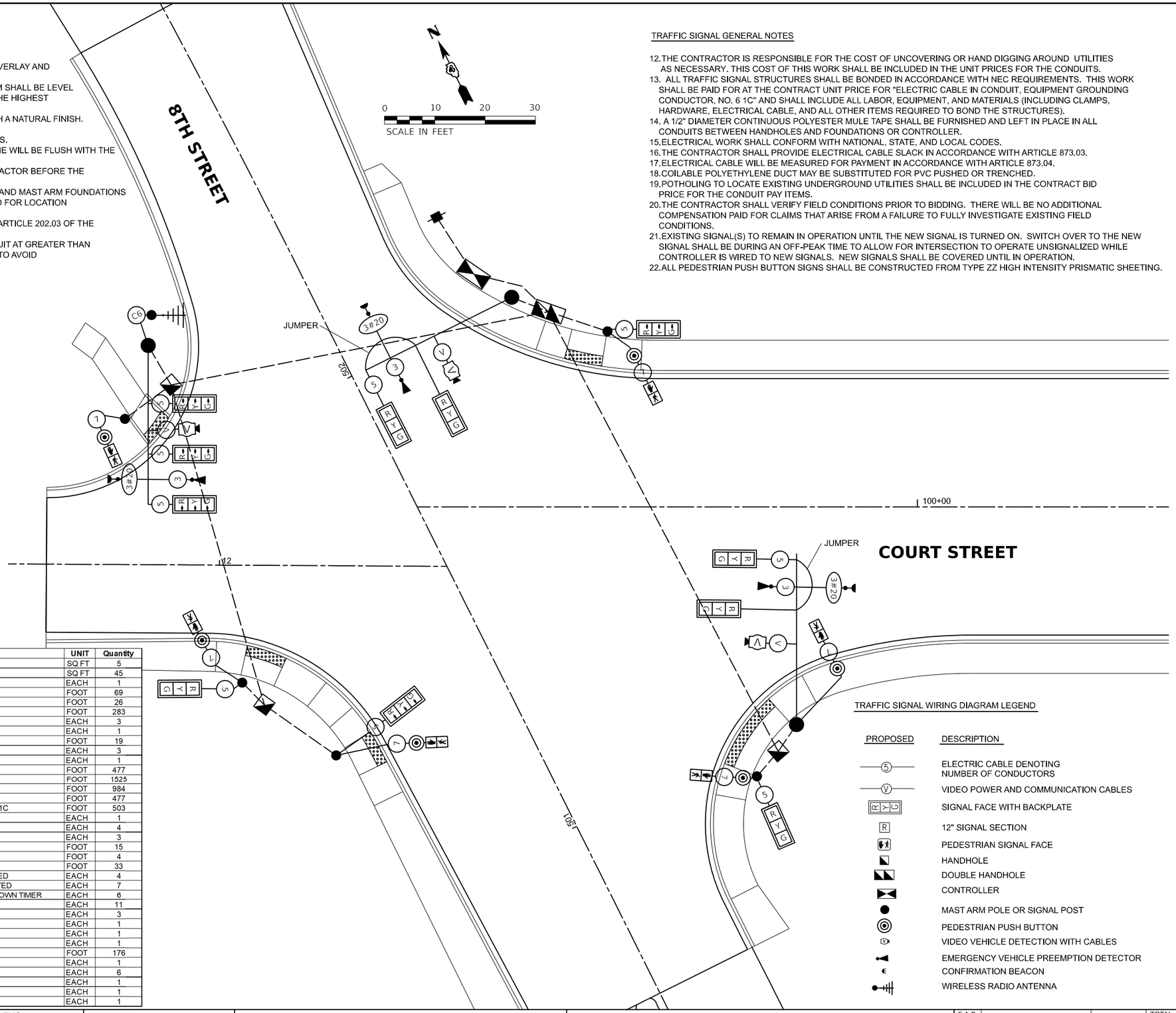

PAY ITEM	DESCRIPTION	UNIT	Quantity
81028350	SIGN PANEL - TYPE 1	SQ FT	5
72000200	SIGN PANEL - TYPE 2	SQ FT	45
80500100	SERVICE INSTALLATION, TYPE A	EACH	1
81028350	UNDERGROUND CONDUIT, PVC, 2" DIA.	FOOT	69
81028370	UNDERGROUND CONDUIT, PVC, 3" DIA.	FOOT	26
81028390	UNDERGROUND CONDUIT, PVC, 4" DIA.	FOOT	283
81400100	HANDHOLE	EACH	3
81400300	DOUBLE HANDHOLE	EACH	1
81702415	ELECTRIC CABLE IN CONDUIT, 600V (XLP-TYPE USE) 3-1/C NO. 6	FOOT	19
82110007	LUMINAIRE, LED, ROADWAY, OUTPUT DESIGNATION G	EACH	3
85700200	FULL-ACTUATED CONTROLLER AND TYPE IV CABINET	EACH	1
87301225	ELECTRIC CABLE IN CONDUIT, SIGNAL NO. 14 3C	FOOT	477
87301245	ELECTRIC CABLE IN CONDUIT, SIGNAL NO. 14 5C	FOOT	1525
87301255	ELECTRIC CABLE IN CONDUIT, SIGNAL NO. 14 7C	FOOT	984
87301295	ELECTRIC CABLE IN CONDUIT, SIGNAL NO. 20 3C	FOOT	477
87301900	ELECTRIC CABLE IN CONDUIT, EQUIPMENT GROUNDING CONDUCTOR, NO. 6 1C	FOOT	503
87502440	TRAFFIC SIGNAL POST, GALVANIZED STEEL 10 FT.	EACH	1
87502490	TRAFFIC SIGNAL POST, GALVANIZED STEEL 15 FT.	EACH	4
87702900	STEEL COMBINATION MAST ARM ASSEMBLY AND POLE 34 FT.	EACH	3
87800100	CONCRETE FOUNDATION, TYPE A	FOOT	15
87800150	CONCRETE FOUNDATION, TYPE C	FOOT	4
87800415	CONCRETE FOUNDATION, TYPE E 36-INCH DIAMETER	FOOT	33
88040070	SIGNAL HEAD, POLYCARBONATE, LED, 1-FACE, 3-SECTION, BRACKET MOUNTED	EACH	4
88040090	SIGNAL HEAD, POLYCARBONATE, LED, 1-FACE, 3-SECTION, MAST ARM MOUNTED	EACH	7
88102717	PEDESTRIAN SIGNAL HEAD, LED, 1-FACE, BRACKET MOUNTED WITH COUNTDOWN TIMER	EACH	6
88200510	TRAFFIC SIGNAL BACKPLATE, RETROREFLECTIVE	EACH	11
88700200	LIGHT DETECTOR	EACH	3
89000100	TEMPORARY TRAFFIC SIGNAL INSTALLATION	EACH	1
89502375	REMOVE EXISTING TRAFFIC SIGNAL EQUIPMENT	EACH	1
X0325810	WIRELESS ETHERNET RADIO	EACH	1
X1400127	CAT. 6 ETHERNET CABLE	FOOT	176
x8710050	FIBER OPTIC ETHERNET DROP AND REPEAT SWITCH	EACH	1
X8760200	ACCESSIBLE PEDESTRIAN SIGNALS	EACH	6
X8870300	EMERGENCY VEHICLE PRIORITY SYSTEM	EACH	1
X8891202	WIDE AREA VIDEO VEHICLE DETECTION SYSTEM COMPLETE	EACH	1
Z0033068	TRAFFIC SIGNAL BATTERY BACKUP SYSTEM	EACH	1

TRAFFIC SIGNAL WIRING DIAGRAM LEGEND

PROPOSED	DESCRIPTION
5	ELECTRIC CABLE DENOTING NUMBER OF CONDUCTORS
V	VIDEO POWER AND COMMUNICATION CABLES
R Y G	SIGNAL FACE WITH BACKPLATE
R	12" SIGNAL SECTION
	PEDESTRIAN SIGNAL FACE
	HANDHOLE
	DOUBLE HANDHOLE
	CONTROLLER
	MAST ARM POLE OR SIGNAL POST
	PEDESTRIAN PUSH BUTTON
	VIDEO VEHICLE DETECTION WITH CABLES
	EMERGENCY VEHICLE PREEMPTION DETECTOR
	CONFIRMATION BEACON
	WIRELESS RADIO ANTENNA

© Copyright Hanson Professional Services Inc. 2025

HANSON
Hanson Professional Services Inc.

DESIGNED JFC 7/26/2023 12:00:00 AM
DRAWN RLA 7/26/2023 12:00:00 AM
REVIEWED MGD 7/26/2023 12:00:00 AM

MODEL: sht-cable01
FILE NAME: h:\3jobs\13L0177A\CAD\RoadSheet\Plan-Set 3 (Bits-10th)\sht-cable01.dgn

Final

USER NAME = ander00846	DESIGNED - EMS	REVISED -	
	DRAWN - EMS	REVISED -	
PLOT SCALE = 0.16666667 ' / in.	CHECKED - TMA	REVISED -	
PLOT DATE = 3/26/2025	DATE - 10/25/2024 12:00:00 AM	REVISED -	

STATE OF ILLINOIS
DEPARTMENT OF TRANSPORTATION

COURT STREET AND 8TH STREET
TRAFFIC CABLE PLANS

SCALE: 1" = 10' | SHEET OF SHEETS | STA. TO STA.

F.A.P. RTE.	SECTION	COUNTY	TOTAL SHEETS	SHEET NO.
693	20-00196-01-RS	TAZEWELL	136	87
	13L0177A	CONTRACT NO. 89859		
		ILLINOIS	FED. AID PROJECT	

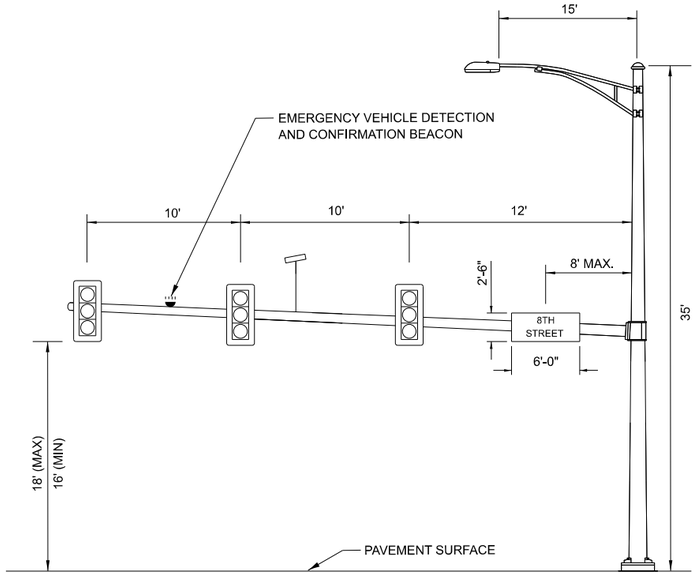

8TH STREET AND COURT STREET (P8)
NORTHWEST QUADRANT (34') FACING EAST

(NOT TO SCALE)

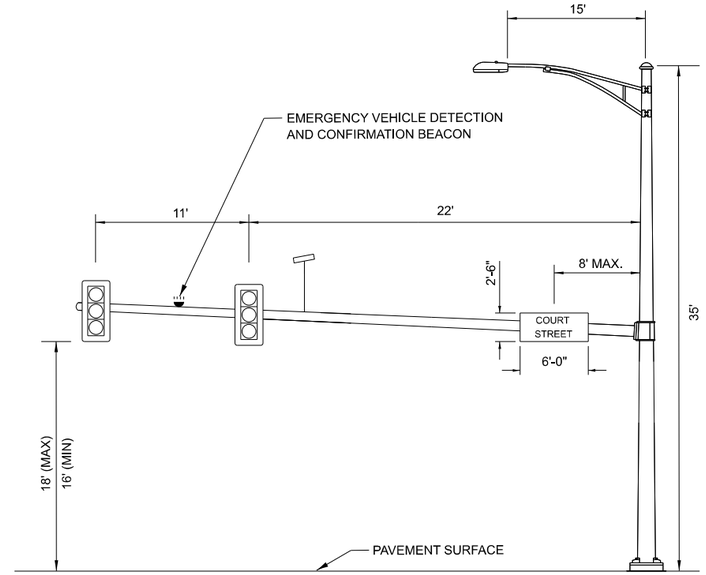

8TH STREET AND COURT STREET (P1)
NORTHEAST QUADRANT (34') FACING SOUTH

(NOT TO SCALE)

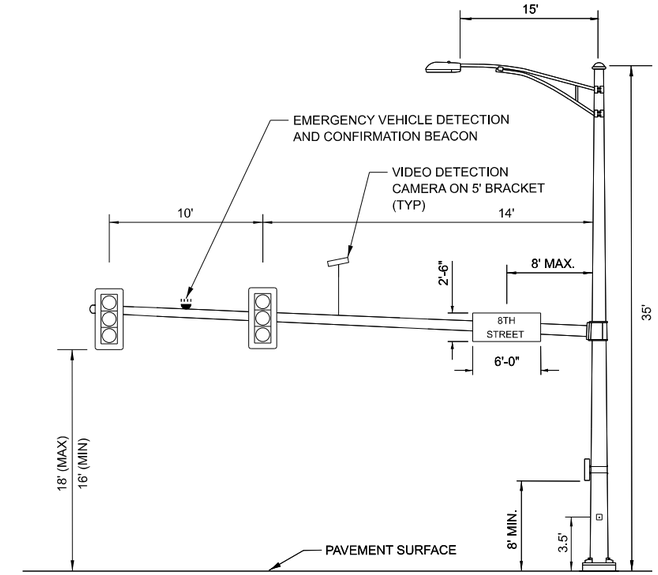

8TH STREET AND COURT STREET (P3)
SOUTHEAST QUADRANT (34') FACING WEST

(NOT TO SCALE)

6 REQUIRED
PEDESTRIAN PUSH BUTTON SIGN
MUTCD R10-4B (L & R)
9" X 12" = 4.50 SQ FT

VIDEO DETECTION NOTE

FINAL PLACEMENT FOR CAMERA
LOCATIONS WILL BE FIELD VERIFIED
FOR PROPER FUNCTIONALITY.

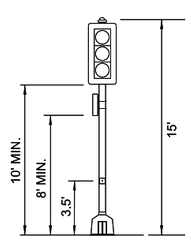

8TH STREET AND
COURT STREET (P2)
NORTHEAST CORNER

(NOT TO SCALE)

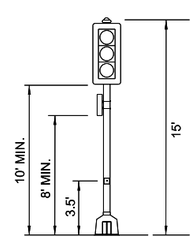

8TH STREET AND
COURT STREET (P4)
SOUTHEAST CORNER

(NOT TO SCALE)

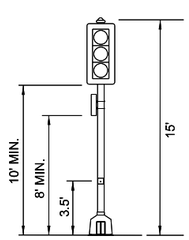

8TH STREET AND
COURT STREET (P5)
SOUTHWEST CORNER

(NOT TO SCALE)

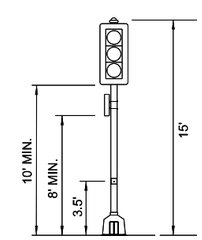

8TH STREET AND
COURT STREET (P6)
SOUTHWEST CORNER

(NOT TO SCALE)

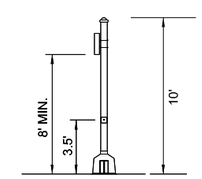

8THE STREET AND
COURT STREET (P7)
SOUTHEAST CORNER

(NOT TO SCALE)

© Copyright Hanson Professional Services Inc. 2025

HANSON
Hanson Professional Services Inc.

DESIGNED	JFC	7/26/2023 12:00:00 AM
DRAWN	RLA	7/26/2023 12:00:00 AM
REVIEWED	MGD	7/26/2023 12:00:00 AM

MODEL: mastarm01
FILE NAME: I:\13jobs\13L0177A\CADRoad\Sheet\Plan-Set 3 (8th-10th)\lght-mastarm01.dgn

Final

USER NAME = ander00846	DESIGNED - EMS	REVISED -	
	DRAWN - EMS	REVISED -	
PLOT SCALE = 0.16666667 ' / in.	CHECKED - TMA	REVISED -	
PLOT DATE = 3/26/2025	DATE - 10/25/2024 12:00:00 AM	REVISED -	

STATE OF ILLINOIS
DEPARTMENT OF TRANSPORTATION

COURT STREET AND 8TH STREET
MAST ARM LOADING DIAGRAM

SCALE: N/A | SHEET OF SHEETS | STA. TO STA.

F.A.P. RTE.	SECTION	COUNTY	TOTAL SHEETS	SHEET NO.
693	20-00196-01-RS	TAZEWELL	136	88
	13L0177A	CONTRACT NO. 89859		
		ILLINOIS	FED. AID PROJECT	

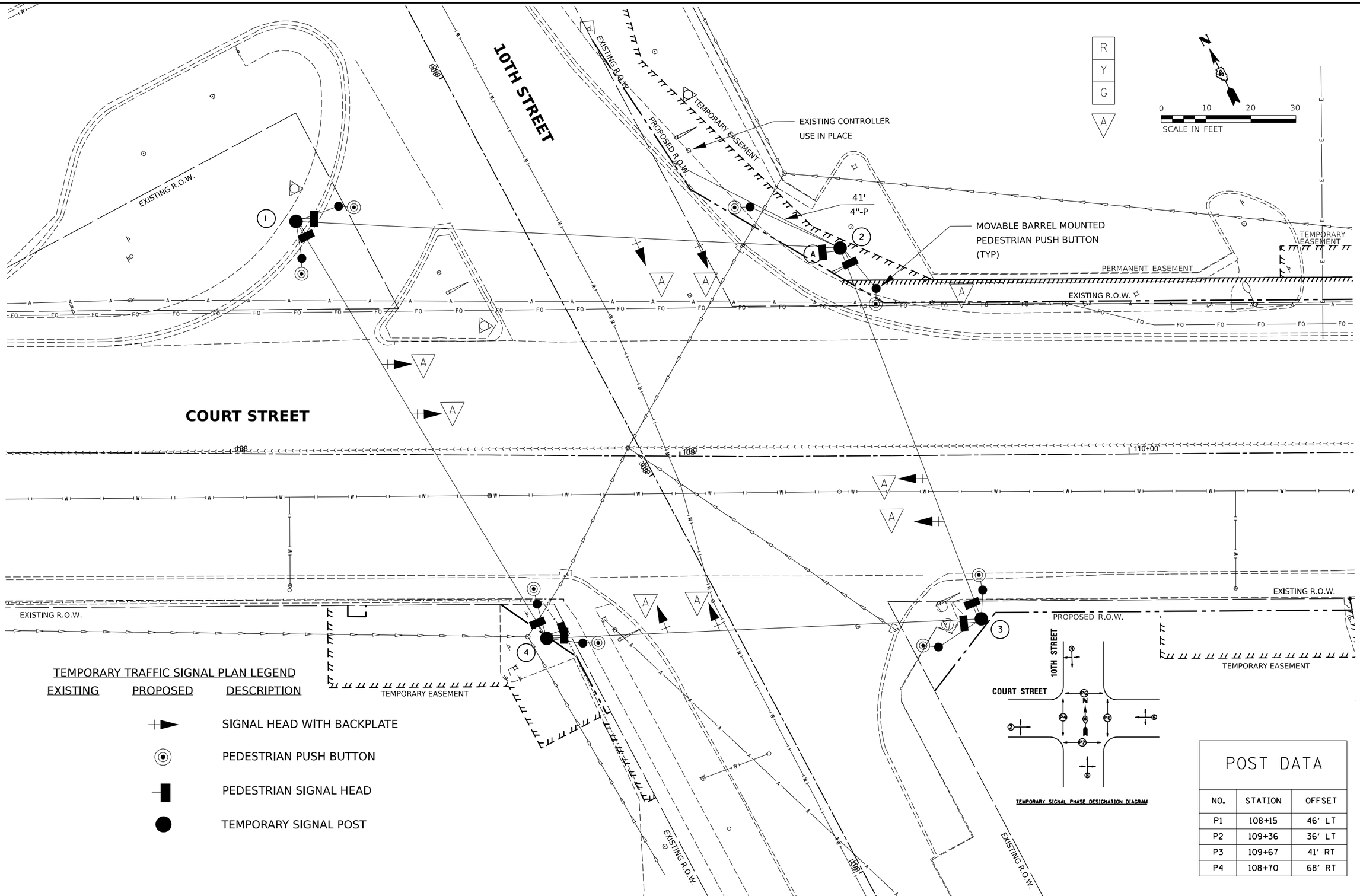

POST DATA

NO.	STATION	OFFSET
P1	108+15	46' LT
P2	109+36	36' LT
P3	109+67	41' RT
P4	108+70	68' RT

© Copyright Hanson Professional Services Inc. 2025

HANSON
Hanson Professional Services Inc.

DESIGNED	JFC	7/26/2023 12:00:00 AM
DRAWN	RLA	7/26/2023 12:00:00 AM
REVIEWED	MGD	7/26/2023 12:00:00 AM

MODEL: sht-signal02
FILE NAME: K:\13Jobs\13L0177A\CAD\RoadSheet\Plan-Set 3 (8th-10th)\sht-signal_Temp 02.dgn

Final

USER NAME = ander00846	DESIGNED - TMA	REVISED -	
	DRAWN - TMA	REVISED -	
PLOT SCALE = 0.16666667 ' / in.	CHECKED - EMS	REVISED -	
PLOT DATE = 3/26/2025	DATE - 10/25/2024 12:00:00 AM	REVISED -	

STATE OF ILLINOIS
DEPARTMENT OF TRANSPORTATION

COURT STREET AND 10TH STREET
TEMPORARY TRAFFIC SIGNAL PLANS

SCALE: 1" = 10' | SHEET OF SHEETS | STA. TO STA.

F.A.P. RTE.	SECTION	COUNTY	TOTAL SHEETS	SHEET NO.
693	20-00196-01-RS	TAZEWELL	136	89
	13L0177A	CONTRACT NO. 89859		
		ILLINOIS	FED. AID PROJECT	

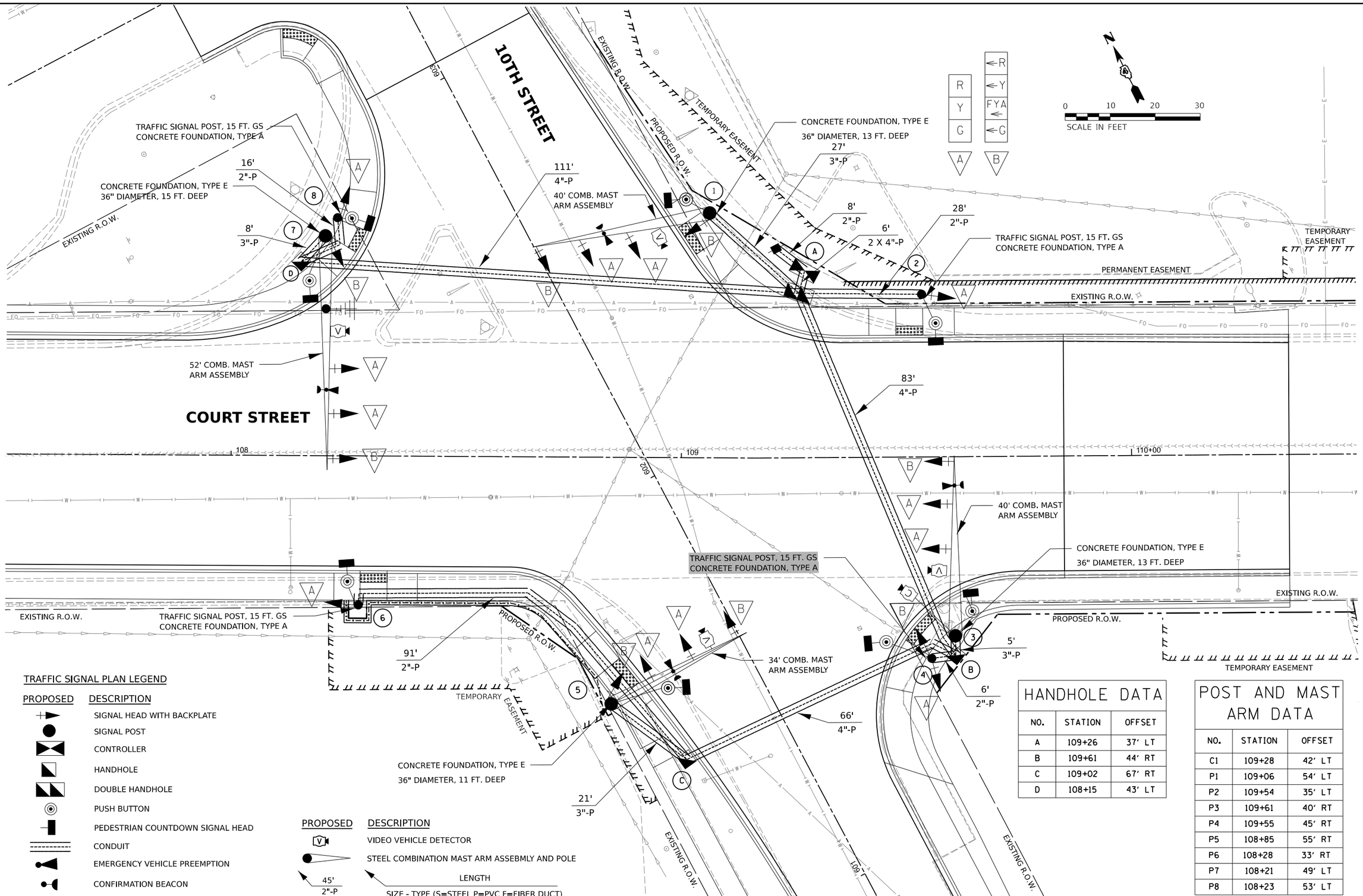

TRAFFIC SIGNAL PLAN LEGEND

PROPOSED	DESCRIPTION
	SIGNAL HEAD WITH BACKPLATE
	SIGNAL POST
	CONTROLLER
	HANDHOLE
	DOUBLE HANDHOLE
	PUSH BUTTON
	PEDESTRIAN COUNTDOWN SIGNAL HEAD
	CONDUIT
	EMERGENCY VEHICLE PREEMPTION
	CONFIRMATION BEACON

PROPOSED	DESCRIPTION
V	VIDEO VEHICLE DETECTOR
	STEEL COMBINATION MAST ARM ASSEBMLY AND POLE
45' / 2"-P	LENGTH / SIZE - TYPE (S=STEEL P=PVC F=FIBER DUCT)

HANDHOLE DATA

NO.	STATION	OFFSET
A	109+26	37' LT
B	109+61	44' RT
C	109+02	67' RT
D	108+15	43' LT

POST AND MAST ARM DATA

NO.	STATION	OFFSET
C1	109+28	42' LT
P1	109+06	54' LT
P2	109+54	35' LT
P3	109+61	40' RT
P4	109+55	45' RT
P5	108+85	55' RT
P6	108+28	33' RT
P7	108+21	49' LT
P8	108+23	53' LT

© Copyright Hanson Professional Services Inc. 2025

HANSON
Hanson Professional Services Inc.

DESIGNED	JFC	7/26/2023 12:00:00 AM
DRAWN	RLA	7/26/2023 12:00:00 AM
REVIEWED	MGD	7/26/2023 12:00:00 AM

MODEL: sht-signal02
FILE NAME: k:\13jobs\13L0177A\CADRoad\Sheet\Plan-Set 3 (8th-10th)\sht-signal02.dgn

Final

USER NAME = ander00846	DESIGNED - EMS	REVISED -	
	DRAWN - EMS	REVISED -	
PLOT SCALE = 0.16666667 ' / in.	CHECKED - TMA	REVISED -	
PLOT DATE = 3/26/2025	DATE - 10/25/2024 12:00:00 AM	REVISED -	

STATE OF ILLINOIS
DEPARTMENT OF TRANSPORTATION

COURT STREET AND 10TH STREET
TRAFFIC SIGNAL PLANS

SCALE: 1" = 10' | SHEET OF SHEETS | STA. TO STA.

F.A.P. RTE.	SECTION	COUNTY	TOTAL SHEETS	SHEET NO.
693	20-00196-01-RS	TAZEWELL	136	90
	13L0177A	CONTRACT NO. 89859		
		ILLINOIS	FED. AID PROJECT	

TRAFFIC SIGNAL WIRING DIAGRAM LEGEND

PROPOSED	DESCRIPTION
(5)	ELECTRIC CABLE DENOTING NUMBER OF CONDUCTORS
(V)	VIDEO POWER AND COMMUNICATION CABLES
	SIGNAL FACE WITH BACKPLATE
R	12" SIGNAL SECTION
	PEDESTRIAN SIGNAL FACE
	HANDHOLE
	DOUBLE HANDHOLE
	CONTROLLER
	MAST ARM POLE OR SIGNAL POST
	APS PEDESTRIAN PUSH BUTTON
	VIDEO VEHICLE DETECTION WITH CABLES
	EMERGENCY VEHICLE PREEMPTION DETECTOR
	CONFIRMATION BEACON
	WIRELESS RADIO ANTENNA

TRAFFIC SIGNAL GENERAL NOTES

1. ALL TRAFFIC SIGNAL SECTIONS SHALL HAVE 12" SINGLE LED LENSES.
2. ALL PEDESTRIAN SECTIONS SHALL HAVE 16" LENSES WITH A MAN/HAND OVERLAY AND COUNTDOWN TIMER.
3. THE RED SECTIONS OF THE SIGNAL HEADS SHARING THE SAME MAST ARM SHALL BE LEVEL WITH ONE ANOTHER AND MAINTAIN A 16 FT. MINIMUM CLEARANCE FROM THE HIGHEST POINT OF THE ROADWAY TO BOTTOM OF THE SIGNAL BACKPLATE.
4. ALL TRAFFIC SIGNAL HEAD BRACKETS ARE TO BE GALVANIZED STEEL WITH A NATURAL FINISH.
5. ALL TRAFFIC SIGNAL POSTS ARE TO BE GALVANIZED STEEL.
6. PROPOSED HANDHOLES SHALL BE CAST IN PLACE CONCRETE HANDHOLES.
7. THE HANDHOLE SHALL BE CONSTRUCTED SO THAT THE TOP OF THE FRAME WILL BE FLUSH WITH THE SURFACE OF THE MEDIAN, SIDEWALK, OR GROUND LINE.
8. THE LOCATION OF ALL UTILITIES SHALL BE FIELD VERIFIED BY THE CONTRACTOR BEFORE THE INSTALLATION OF ANY TRAFFIC SIGNAL COMPONENTS.
9. THE LOCATIONS FOR HANDHOLES, TRAFFIC SIGNAL POST FOUNDATIONS, AND MAST ARM FOUNDATIONS ARE PROVIDED FOR REFERENCE ONLY. THE ENGINEER SHALL BE NOTIFIED FOR LOCATION VERIFICATION BEFORE INSTALLATION.
10. ALL SURPLUS MATERIALS SHALL BE DISPOSED OF IN ACCORDANCE WITH ARTICLE 202.03 OF THE STANDARD SPECIFICATIONS.
11. NO ADDITIONAL COMPENSATION SHALL BE ALLOWED FOR PLACING CONDUIT AT GREATER THAN 2 FT. MINIMUM DEPTH OR IN AN INDIRECT ROUTE BETWEEN STRUCTURES TO AVOID OBSTACLES SUCH AS UNDERGROUND UTILITIES.
12. THE CONTRACTOR IS RESPONSIBLE FOR THE COST OF UNCOVERING OR HAND DIGGING AROUND UTILITIES AS NECESSARY. THIS COST OF THIS WORK SHALL BE INCLUDED IN THE UNIT PRICES FOR THE CONDUITS.

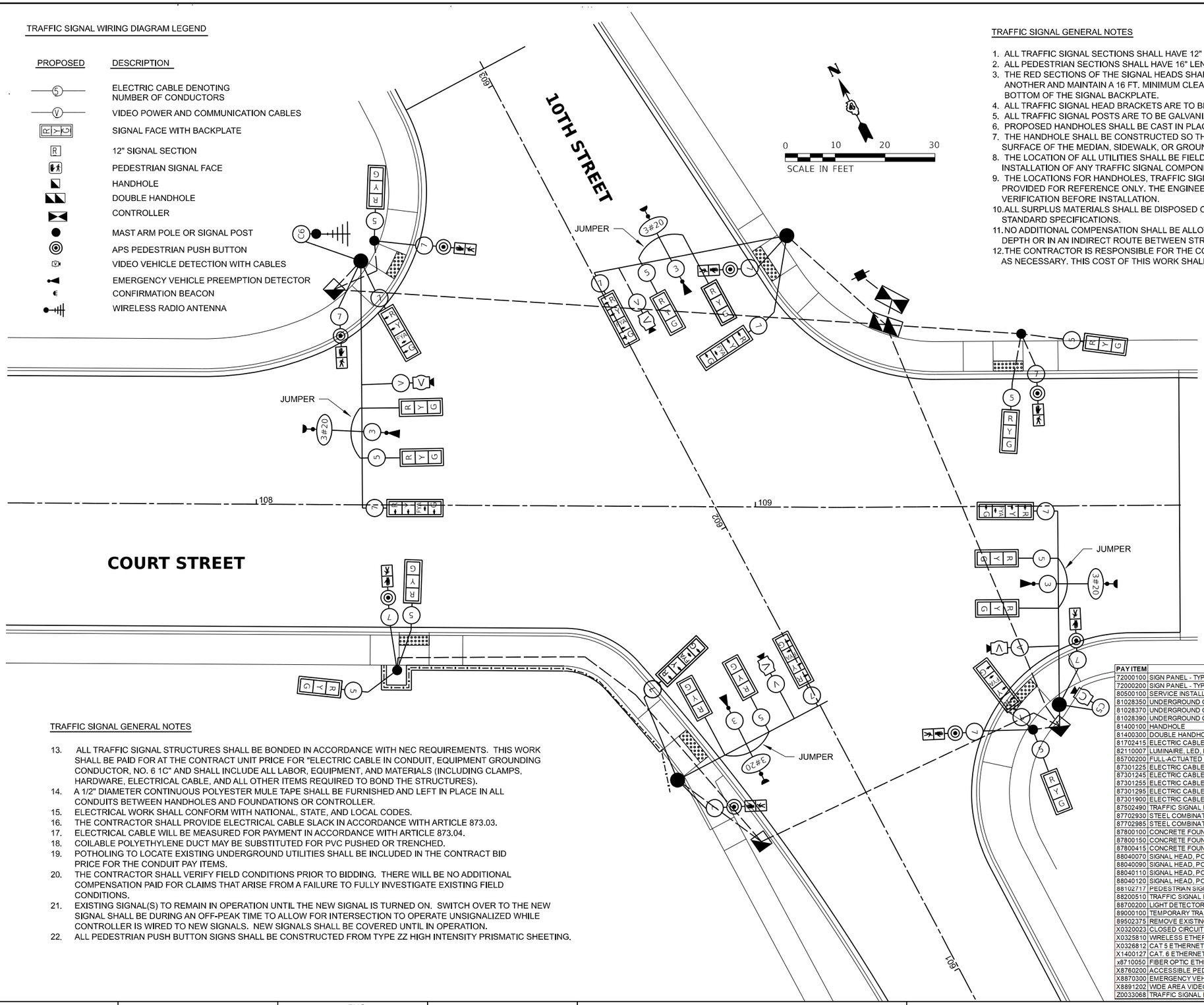

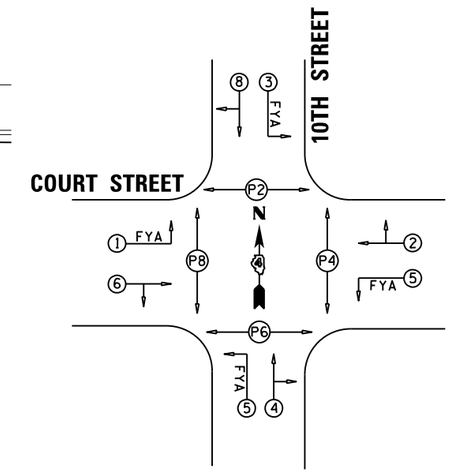

PHASE DESIGNATION DIAGRAM

TRAFFIC SIGNAL GENERAL NOTES

13. ALL TRAFFIC SIGNAL STRUCTURES SHALL BE BONDED IN ACCORDANCE WITH NEC REQUIREMENTS. THIS WORK SHALL BE PAID FOR AT THE CONTRACT UNIT PRICE FOR "ELECTRIC CABLE IN CONDUIT, EQUIPMENT GROUNDING CONDUCTOR, NO. 6 1C" AND SHALL INCLUDE ALL LABOR, EQUIPMENT, AND MATERIALS (INCLUDING CLAMPS, HARDWARE, ELECTRICAL CABLE, AND ALL OTHER ITEMS REQUIRED TO BOND THE STRUCTURES).
14. A 1/2" DIAMETER CONTINUOUS POLYESTER MULE TAPE SHALL BE FURNISHED AND LEFT IN PLACE IN ALL CONDUITS BETWEEN HANDHOLES AND FOUNDATIONS OR CONTROLLER.
15. ELECTRICAL WORK SHALL CONFORM WITH NATIONAL, STATE, AND LOCAL CODES.
16. THE CONTRACTOR SHALL PROVIDE ELECTRICAL CABLE SLACK IN ACCORDANCE WITH ARTICLE 873.03.
17. ELECTRICAL CABLE WILL BE MEASURED FOR PAYMENT IN ACCORDANCE WITH ARTICLE 873.04.
18. COILABLE POLYETHYLENE DUCT MAY BE SUBSTITUTED FOR PVC PUSHED OR TRENCHED.
19. POTHOLING TO LOCATE EXISTING UNDERGROUND UTILITIES SHALL BE INCLUDED IN THE CONTRACT BID PRICE FOR THE CONDUIT PAY ITEMS.
20. THE CONTRACTOR SHALL VERIFY FIELD CONDITIONS PRIOR TO BIDDING. THERE WILL BE NO ADDITIONAL COMPENSATION PAID FOR CLAIMS THAT ARISE FROM A FAILURE TO FULLY INVESTIGATE EXISTING FIELD CONDITIONS.
21. EXISTING SIGNAL(S) TO REMAIN IN OPERATION UNTIL THE NEW SIGNAL IS TURNED ON. SWITCH OVER TO THE NEW SIGNAL SHALL BE DURING AN OFF-PEAK TIME TO ALLOW FOR INTERSECTION TO OPERATE UNSIGNALIZED WHILE CONTROLLER IS WIRED TO NEW SIGNALS. NEW SIGNALS SHALL BE COVERED UNTIL IN OPERATION.
22. ALL PEDESTRIAN PUSH BUTTON SIGNS SHALL BE CONSTRUCTED FROM TYPE ZZ HIGH INTENSITY PRISMATIC SHEETING.

PAY ITEM	DESCRIPTION	UNIT	Quantity
72000100	SIGN PANEL - TYPE 1	SQ FT	26
72000200	SIGN PANEL - TYPE 2	SQ FT	60
80500100	SERVICE INSTALLATION, TYPE A	EACH	1
81028350	UNDERGROUND CONDUIT, PVC, 2" DIA.	FOOT	89
81028370	UNDERGROUND CONDUIT, PVC, 3" DIA.	FOOT	66
81028390	UNDERGROUND CONDUIT, PVC, 4" DIA.	FOOT	309
81400100	HANDHOLE	EACH	3
81400300	DOUBLE HANDHOLE	EACH	1
81702415	ELECTRIC CABLE IN CONDUIT, 600V (XLP-TYPE USE) 3-1/C NO. 6	FOOT	14
82110007	LUMINAIRE, LED, ROADWAY, OUTPUT DESIGNATION G	EACH	4
85700200	FULL-ACTUATED CONTROLLER AND TYPE IV CABINET	EACH	1
87301225	ELECTRIC CABLE IN CONDUIT, SIGNAL NO. 14 3C	FOOT	790
87301245	ELECTRIC CABLE IN CONDUIT, SIGNAL NO. 14 5C	FOOT	1792
87301255	ELECTRIC CABLE IN CONDUIT, SIGNAL NO. 14 7C	FOOT	2710
87301295	ELECTRIC CABLE IN CONDUIT, SIGNAL NO. 20 3C	FOOT	790
87301900	ELECTRIC CABLE IN CONDUIT, EQUIPMENT GROUNDING CONDUCTOR, NO. 6 1C	FOOT	607
87502490	TRAFFIC SIGNAL POST, GALVANIZED STEEL 15 FT.	EACH	4
87702930	STEEL COMBINATION MAST ARM ASSEMBLY AND POLE 40 FT.	EACH	2
87702985	STEEL COMBINATION MAST ARM ASSEMBLY AND POLE 52 FT.	EACH	1
87800100	CONCRETE FOUNDATION, TYPE A	FOOT	12
87800150	CONCRETE FOUNDATION, TYPE C	FOOT	4
87800415	CONCRETE FOUNDATION, TYPE E 36-INCH DIAMETER	FOOT	52
88040070	SIGNAL HEAD, POLYCARBONATE, LED, 1-FACE, 3-SECTION, BRACKET MOUNTED	EACH	6
88040090	SIGNAL HEAD, POLYCARBONATE, LED, 1-FACE, 3-SECTION, MAST ARM MOUNTED	EACH	8
88040110	SIGNAL HEAD, POLYCARBONATE, LED, 1-FACE, 4-SECTION, BRACKET MOUNTED	EACH	4
88040120	SIGNAL HEAD, POLYCARBONATE, LED, 1-FACE, 4-SECTION, MAST ARM MOUNTED	EACH	4
88102717	PEDESTRIAN SIGNAL HEAD, LED, 1-FACE, BRACKET MOUNTED WITH COUNTDOWN TIMER	EACH	8
88200510	TRAFFIC SIGNAL BACKPLATE, RETROREFLECTIVE	EACH	22
88700200	LIGHT DETECTOR	EACH	4
89000100	TEMPORARY TRAFFIC SIGNAL INSTALLATION	EACH	1
89502375	REMOVE EXISTING TRAFFIC SIGNAL EQUIPMENT	EACH	1
X0320023	CLOSED CIRCUIT TELEVISION DOME CAMERA, HD	EACH	1
X0325810	WIRELESS ETHERNET RADIO	EACH	1
X0326812	CAT 5 ETHERNET CABLE	FOOT	163
X1400127	CAT. 6 ETHERNET CABLE	FOOT	194
x8710050	FIBER OPTIC ETHERNET DROP AND REPEAT SWITCH	EACH	1
X8760200	ACCESSIBLE PEDESTRIAN SIGNALS	EACH	8
X8870300	EMERGENCY VEHICLE PRIORITY SYSTEM	EACH	1
X8891202	WIDE AREA VIDEO VEHICLE DETECTION SYSTEM COMPLETE	EACH	1
Z0033068	TRAFFIC SIGNAL BATTERY BACKUP SYSTEM	EACH	1

© Copyright Hanson Professional Services Inc. 2025

HANSON
Hanson Professional Services Inc.

DESIGNED	FC	7/26/2023 12:00:00 AM
DRAWN	RLA	7/26/2023 12:00:00 AM
REVIEWED	MGD	7/26/2023 12:00:00 AM

MODEL: slit-cable02
FILE NAME: k:\jobs\13L0177A\CADRoad\Sheet\Plan-Set 3 (8th-10th)\slit-cable02.dgn

Final

USER NAME = ander00846	DESIGNED - EMS	REVISED -	
	DRAWN - EMS	REVISED -	
PLOT SCALE = 0.16666667 ' / in.	CHECKED - TMA	REVISED -	
PLOT DATE = 3/26/2025	DATE - 10/25/2024 12:00:00 AM	REVISED -	

STATE OF ILLINOIS
DEPARTMENT OF TRANSPORTATION

COURT STREET AND 10TH STREET
TRAFFIC CABLE PLANS

SCALE: 1" = 10' | SHEET OF SHEETS | STA. TO STA.

F.A.P. RTE.	SECTION	COUNTY	TOTAL SHEETS	SHEET NO.
693	20-00196-01-RS	TAZEWELL	136	91
	13L0177A	CONTRACT NO. 89859		
	ILLINOIS	FED. AID PROJECT		

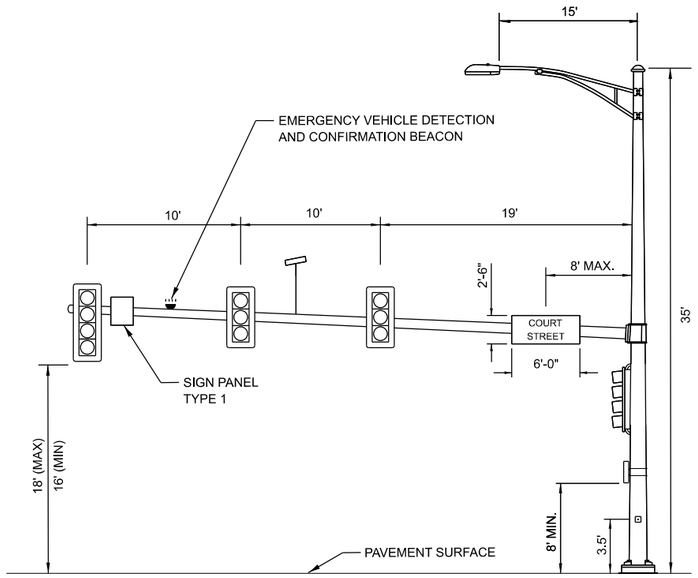

10TH STREET AND COURT STREET (P1)
NORTHEAST QUADRANT (40') FACING SOUTH

(NOT TO SCALE)

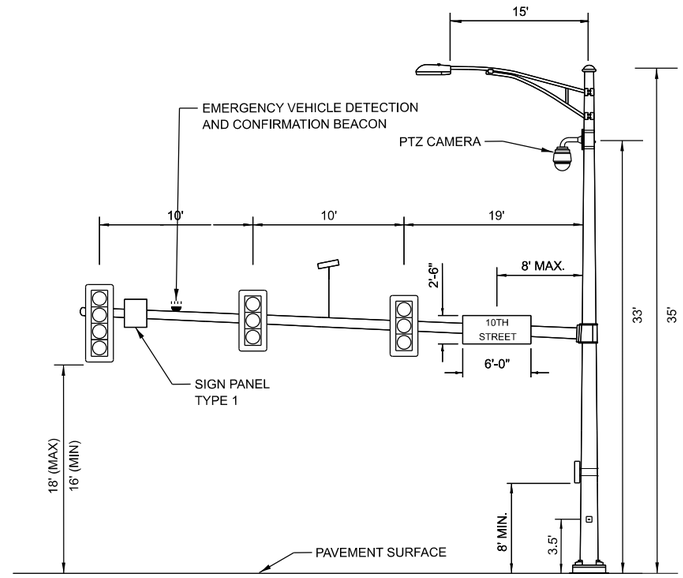

10TH STREET AND COURT STREET (P3)
SOUTHEAST QUADRANT (40') FACING WEST

(NOT TO SCALE)

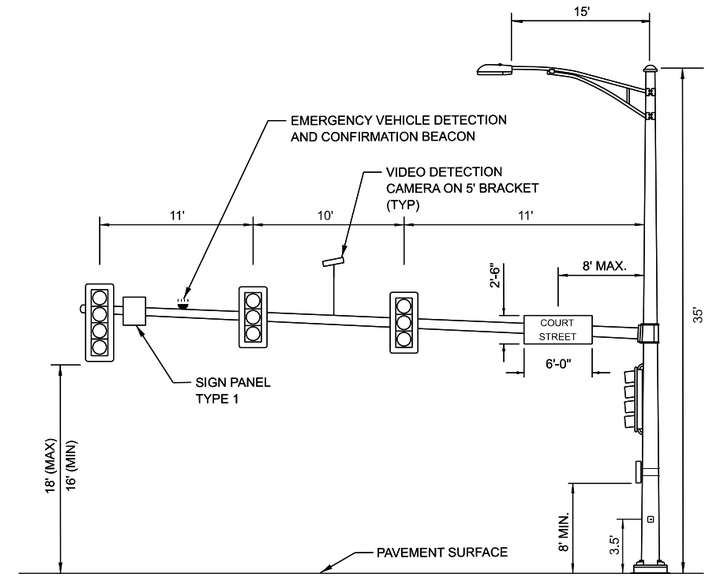

10TH STREET AND COURT STREET (P5)
SOUTHWEST QUADRANT (34') FACING NORTH

(NOT TO SCALE)

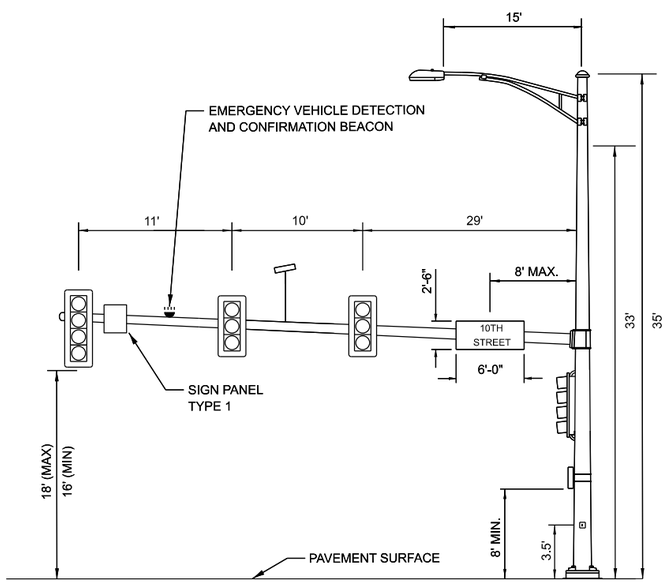

10TH STREET AND COURT STREET (P7)
NORTHWEST QUADRANT (52') FACING EAST

(NOT TO SCALE)

24" x 30"

SIGN PANEL TYPE 1 (P5,P10)

SIGN BACKGROUND: WHITE
4IGN LETTERING: BLACK
4 REQUIRED = 20.0 SQ FT

8 REQUIRED
PEDESTRIAN PUSH BUTTON SIGN
MUTCD R10-4B (L & R)
9" X 12" = 6.0 SQ FT

VIDEO DETECTION NOTE

FINAL PLACEMENT FOR CAMERA
LOCATIONS WILL BE FIELD VERIFIED
FOR PROPER FUNCTIONALITY.

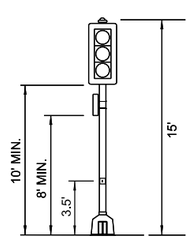

10TH STREET AND
COURT STREET (P2)
NORTHEAST CORNER

(NOT TO SCALE)

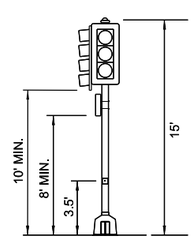

STADIUM DRIVE AND
COURT STREET (P4)
SOUTHEAST CORNER

(NOT TO SCALE)

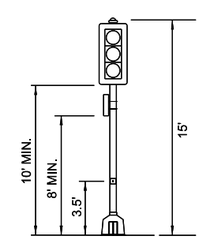

10TH STREET AND
COURT STREET (P6)
SOUTHWEST CORNER

(NOT TO SCALE)

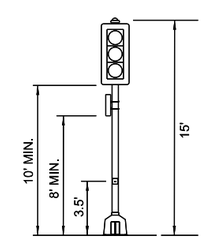

10TH STREET AND
COURT STREET (P8)
SOUTHWEST CORNER

(NOT TO SCALE)

©Copyright Hanson Professional Services Inc. 2025

HANSON
Hanson Professional Services Inc.

DESIGNED	JFC	7/26/2023 12:00:00 AM
DRAWN	RLA	7/26/2023 12:00:00 AM
REVIEWED	MGD	7/26/2023 12:00:00 AM

MODEL: mastarm01
FILE NAME: E:\Jobs\13L0177A\CAD\Road\Sheet\Plan-Set 3 (8th-10th)\sht-mastarm02.dgn

Final

USER NAME = ander00846	DESIGNED - EMS	REVISED -	
	DRAWN - EMS	REVISED -	
PLOT SCALE = 0.16666667 ' / in.	CHECKED - TMA	REVISED -	
PLOT DATE = 3/26/2025	DATE - 10/25/2024 12:00:00 AM	REVISED -	

STATE OF ILLINOIS
DEPARTMENT OF TRANSPORTATION

COURT STREET AND 10TH STREET
MAST ARM LOADING DIAGRAM

SCALE: N/A | SHEET OF SHEETS | STA. TO STA.

F.A.P. RTE.	SECTION	COUNTY	TOTAL SHEETS	SHEET NO.
693	20-00196-01-RS	TAZEWELL	136	92
	13L0177A	CONTRACT NO. 89859		
		ILLINOIS	FED. AID PROJECT	

GENERAL NOTES

1. PRIOR TO THE INSTALLATION OF NEW CABLE DUCT, CONDUITS, JUNCTION BOXES, LIGHT STANDARD FOUNDATIONS AND APPURTENANCES THE CONTRACTOR SHALL DETERMINE THE EXACT LOCATION OF EXISTING LIGHTING CONDUITS, CABLES AND UNDERGROUND UTILITIES.
2. THE CONTRACTOR SHALL VERIFY ALL OF THE DATA SHOWN ON THE CONTRACT PLANS AND REFERENCE DRAWINGS WHICH WOULD AFFECT HIS WORK UNDER THIS CONTRACT AND THE OPERATION OF THE EXISTING ROADWAY LIGHTING SYSTEMS.
3. ALL NEW CABLE DUCT, CONDUIT, JUNCTION BOXES, AND APPURTENANCES ARE ILLUSTRATED DIAGRAMMATICALLY. THE ACTUAL LOCATION IN THE FIELD SHALL MEET WITH THE APPROVAL OF THE ENGINEER.
4. THE SCALE SHOWN ON THE PLANS APPLIES ONLY TO THE FULL SIZE PLANS AND NOT TO REDUCED SIZED PLANS.
5. ELECTRICAL MATERIALS SHALL BE NEW AND OF THE TYPES AND KINDS APPROVED BY THE FOLLOWING ORGANIZATIONS:
   NATIONAL ELECTRICAL MANUFACTURERS ASSOCIATION
   INSTITUTE OF ELECTRICAL AND ELECTRONICS ENGINEERS
   ILLUMINATING ENGINEERING SOCIETY
   AMERICAN ASSOCIATION OF STATE HIGHWAY AND TRANSPORTATION OFFICIALS
   U.S. DEPARTMENT OF TRANSPORTATION
   UNDERWRITERS LABORATORIES
   AMERICAN NATIONAL STANDARDS INSTITUTE
   INSULATED CABLE ENGINEERS ASSOCIATION
   IDOT STANDARD SPECIFICATIONS FOR ROAD AND BRIDGE CONSTRUCTION
6. CONDUIT AND CABLE DUCT SHALL BE INSTALLED BY TRENCHING UNLESS SPECIFICALLY SHOWN ON THE PLANS AS BEING BORED OR PUSHED IN.
7. CONDUIT AND CABLE DUCT SHALL BE POSITIONED IN THE FIELD TO AVOID CONFLICT WITH UNDERDRAINS.
8. THE CONTRACTOR SHALL LOCATE CONDUIT PATH AND LIGHT PATH LOCATIONS AND THE FINAL DETERMINATION OF THESE LOCATIONS SHALL BE APPROVED BY THE OWNER PRIOR TO CONSTRUCTION.

PAY ITEM	DESCRIPTION	UNIT	QUANTITY
80400100	ELECTRIC SERVICE INSTALLATION	EACH	1
81028720	UNDERGROUND CONDUIT, COILABLE NONMETALLIC CONDUIT, 1" DIA.	FOOT	1,000
81400700	HANDHOLE, PORTLAND CEMENT CONCRETE	EACH	2
81702110	ELECTRIC CABLE IN CONDUIT, 600V (XLP-TYPE USE) 1/C NO. 10	FOOT	9,350
82110005	LUMINAIRE, LED, ROADWAY, OUTPUT DESIGNATION E	EACH	5
82110007	LUMINAIRE, LED, ROADWAY, OUTPUT DESIGNATION G	EACH	8
83006200	LIGHT POLE, ALUMINUM, 30 FT. M.H., 6 FT. MAST ARM	EACH	5
83600200	LIGHT POLE FOUNDATION, 24" DIAMETER	FOOT	25
83800105	BREAKAWAY DEVICE, TRANSFORMER BASE, 11.5 INCH BOLT CIRCLE	EACH	20
X8250505	LIGHTING CONTROLLER (SPECIAL)	EACH	1

LEGEND

- CONTROL POINT
- EXISTING TELEPHONE PEDESTAL
- EXISTING GUY
- EXISTING POWER POLE
- EXISTING SIGN
- EXISTING TREE
- EXISTING R.O.W. MARKER
- PROPOSED LIGHT ON NEW POLE
- PROPOSED HANDHOLE
- NEW OUTDOOR ROADWAY LIGHTING CONTROLLER
- R# — 240V, 87W LED ROADWAY LIGHTING FIXTURE DESIGNATION "#" DESIGNATES FIXTURE NUMBER ON PLANS (IDOT "E" OUTPUT DESIGNATION)
- Y# — 240V, 115W LED INTERSECTION LIGHTING FIXTURE DESIGNATION "#" DESIGNATES FIXTURE NUMBER ON PLANS (IDOT "G" OUTPUT DESIGNATION)
- # — CIRCUIT NUMBER CALLOUT
- T — TELEPHONE
- CTV — CABLE TELEVISION
- W — WATERMAIN
- FO — FIBER OPTIC
- A — OVERHEAD LINE
- EXISTING R.O.W.
- G — GASLINE
- E — UNDERGROUND ELECTRIC
- E — PROPOSED UNDERGROUND ELECTRIC
- A# — PROPOSED LIGHT ON AMEREN POWER POLE (BY AMEREN) (IDOT "E" OUTPUT DESIGNATION) "#" DESIGNATES FIXTURE NUMBER ON PLANS

LIGHT FIXTURE SCHEDULE

FIXTURE DESIGNATION	FIXTURE TYPE	MANUFACTURER & CATALOG NO.	TYPE/LAMPS /WATTS	VOLT	MOUNTING
R#		GE CURRENT EVOLVE LED ROADWAY LIGHTING: ERL1-0-11-C5-30-A-GRAY-F-G	ROADWAY FIXTURE LED 87W 3000K	MVOLT	POLE MOUNTED 30.75 FT. HEIGHT 6 FT. MAST ARM
Y#		GE CURRENT EVOLVE LED ROADWAY LIGHTING: ERL2-0-16-C5-30-A-GRAY-F-G	INTERSECTION FIXTURE LED 115W 3000K	MVOLT	MOUNTED TO INTERSECTION MAST-ARM 35 FT. HEIGHT 12 FT. MAST ARM

UTILITY NOTE

THE LOCATIONS OF THOSE BURIED AND ABOVEGROUND UTILITIES SHOWN ARE APPROXIMATE, ARE SHOWN FOR CONTRACTOR INFORMATIONAL USE ONLY, AND ARE NOT TO BE REFERENCED FOR CONSTRUCTION PURPOSES. THE IMPLIED PRESENCE OR ABSENCE OF UTILITIES IS NOT TO BE CONSTRUED BY THE OWNER, ENGINEER, CONTRACTOR, OR SUBCONTRACTORS TO BE AN ACCURATE AND COMPLETE REPRESENTATION OF UTILITIES THAT MAY OR MAY NOT EXIST ON THE CONSTRUCTION SITE. BURIED AND ABOVEGROUND UTILITY LOCATION, IDENTIFICATION, AND MARKING ARE THE SOLE RESPONSIBILITY OF THE CONTRACTOR. REROUTING, DISCONNECTION, PROTECTION, ETC. OF ANY UTILITIES MUST BE COORDINATED AMONG THE CONTRACTOR, UTILITY COMPANY, AND OWNER. SITE SAFETY, INCLUDING THE AVOIDANCE OF HAZARDS, ASSOCIATED WITH BURIED AND ABOVEGROUND UTILITIES REMAIN THE SOLE RESPONSIBILITY OF THE CONTRACTOR.

© Copyright Hanson Professional Services Inc. 2025

HANSON Hanson Professional Services Inc.

DESIGNED	SN/RN	7/26/2023 12:00:00 AM
DRAWN	SN	7/26/2023 12:00:00 AM
REVIEWED	MGD	10/25/2024 12:00:00 AM

MODEL: sht-notes
FILE NAME: R:\13Jobs\13L0177A\CAD\RoadSheet\Plan-Set 3 (8th-10th)\sht-lightgenntes01.dgn

Final

USER NAME = ander00846	DESIGNED - SN/RN	REVISED -	
	DRAWN - SN	REVISED -	
PLOT SCALE = 0.16666667 ' / in.	CHECKED - MGD	REVISED -	
PLOT DATE = 3/26/2025	DATE - 10/25/2024 12:00:00 AM	REVISED -	

STATE OF ILLINOIS
DEPARTMENT OF TRANSPORTATION

COURT STREET
LIGHTING GENERAL NOTES AND LEGEND

SCALE: N/A | SHEET OF SHEETS | STA. TO STA.

F.A.P. RTE.	SECTION	COUNTY	TOTAL SHEETS	SHEET NO.
693	20-00196-01-RS	TAZEWELL	136	93
	13L0177A	CONTRACT NO. 89859		
	ILLINOIS	FED. AID PROJECT		

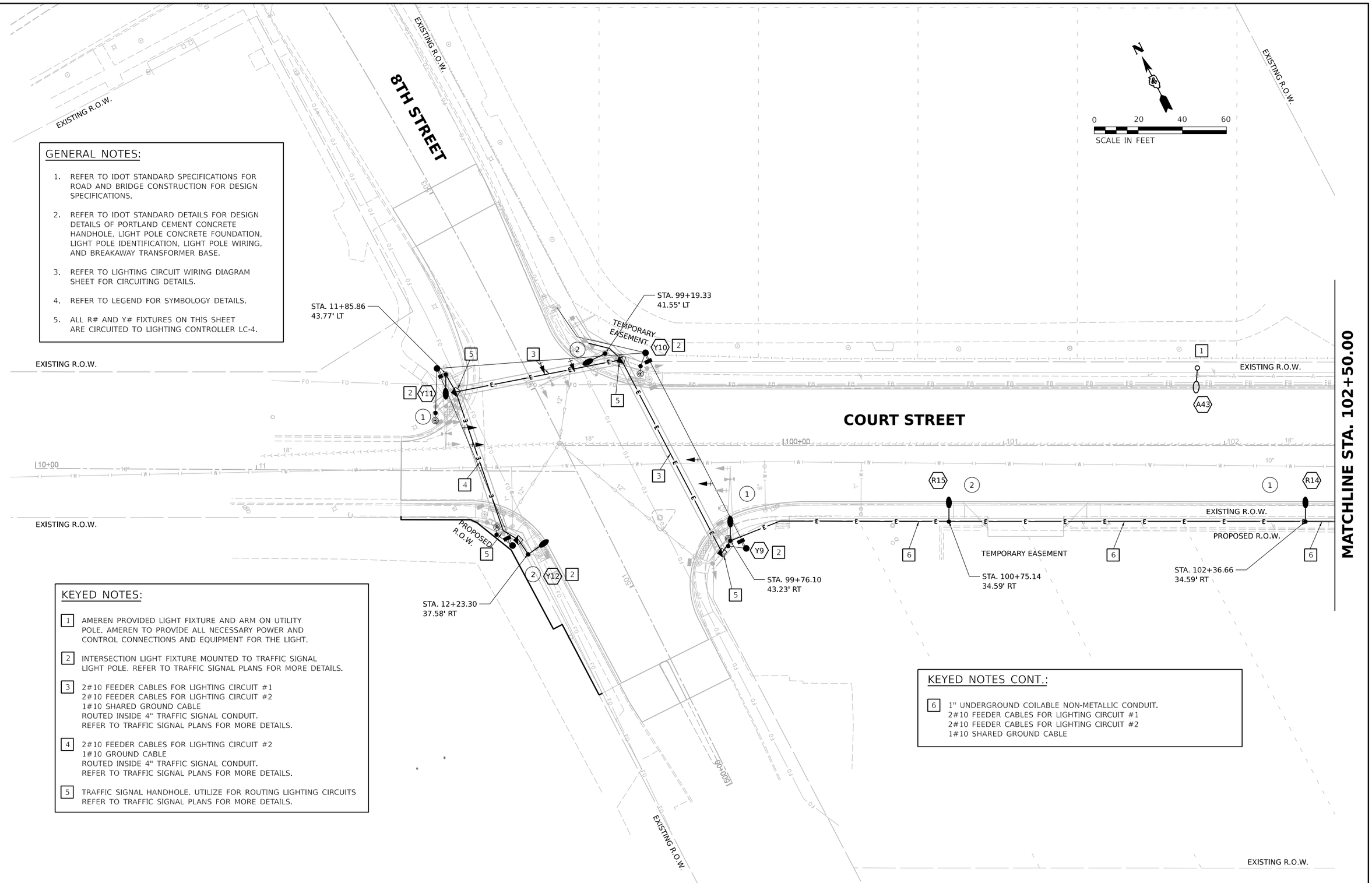

GENERAL NOTES:

1. REFER TO IDOT STANDARD SPECIFICATIONS FOR ROAD AND BRIDGE CONSTRUCTION FOR DESIGN SPECIFICATIONS.
2. REFER TO IDOT STANDARD DETAILS FOR DESIGN DETAILS OF PORTLAND CEMENT CONCRETE HANDHOLE, LIGHT POLE CONCRETE FOUNDATION, LIGHT POLE IDENTIFICATION, LIGHT POLE WIRING, AND BREAKAWAY TRANSFORMER BASE.
3. REFER TO LIGHTING CIRCUIT WIRING DIAGRAM SHEET FOR CIRCUITING DETAILS.
4. REFER TO LEGEND FOR SYMBOLOGY DETAILS.
5. ALL R# AND Y# FIXTURES ON THIS SHEET ARE CIRCUITED TO LIGHTING CONTROLLER LC-4.

KEYED NOTES:

1. AMEREN PROVIDED LIGHT FIXTURE AND ARM ON UTILITY POLE. AMEREN TO PROVIDE ALL NECESSARY POWER AND CONTROL CONNECTIONS AND EQUIPMENT FOR THE LIGHT.
2. INTERSECTION LIGHT FIXTURE MOUNTED TO TRAFFIC SIGNAL LIGHT POLE. REFER TO TRAFFIC SIGNAL PLANS FOR MORE DETAILS.
3. 2#10 FEEDER CABLES FOR LIGHTING CIRCUIT #1
   2#10 FEEDER CABLES FOR LIGHTING CIRCUIT #2
   1#10 SHARED GROUND CABLE
   ROUTED INSIDE 4" TRAFFIC SIGNAL CONDUIT.
   REFER TO TRAFFIC SIGNAL PLANS FOR MORE DETAILS.
4. 2#10 FEEDER CABLES FOR LIGHTING CIRCUIT #2
   1#10 GROUND CABLE
   ROUTED INSIDE 4" TRAFFIC SIGNAL CONDUIT.
   REFER TO TRAFFIC SIGNAL PLANS FOR MORE DETAILS.
5. TRAFFIC SIGNAL HANDHOLE. UTILIZE FOR ROUTING LIGHTING CIRCUITS REFER TO TRAFFIC SIGNAL PLANS FOR MORE DETAILS.

KEYED NOTES CONT.:

6. 1" UNDERGROUND COILABLE NON-METALLIC CONDUIT.
   2#10 FEEDER CABLES FOR LIGHTING CIRCUIT #1
   2#10 FEEDER CABLES FOR LIGHTING CIRCUIT #2
   1#10 SHARED GROUND CABLE

© Copyright Hanson Professional Services Inc. 2025

HANSON
Hanson Professional Services Inc.

DESIGNED	SN/RN	7/26/2023 12:00:00 AM
DRAWN	SN	7/26/2023 12:00:00 AM
REVIEWED	MGD	10/25/2024 12:00:00 AM

MODEL: sht-light01
FILE NAME: K:\13Jobs\13L0177A\CAD\Road\Sheet\Plan-Set 3 (8th-10th)\sht-light01.dgn

Final

USER NAME = ander00846	DESIGNED - SN/RN	REVISED -	
	DRAWN - SN	REVISED -	
PLOT SCALE = 0.16666667 ' / in.	CHECKED - MGD	REVISED -	
PLOT DATE = 3/26/2025	DATE - 10/25/2024 12:00:00 AM	REVISED -	

STATE OF ILLINOIS
DEPARTMENT OF TRANSPORTATION

COURT STREET
LIGHTING PLANS

SCALE: 1" = 20' | SHEET OF SHEETS | STA. TO STA.

F.A.P. RTE.	SECTION	COUNTY	TOTAL SHEETS	SHEET NO.
693	20-00196-01-RS	TAZEWELL	136	94
	13L0177A	CONTRACT NO. 89859		
		ILLINOIS	FED. AID PROJECT	

GENERAL NOTES:

1. REFER TO IDOT STANDARD SPECIFICATIONS FOR ROAD AND BRIDGE CONSTRUCTION FOR DESIGN SPECIFICATIONS.
2. REFER TO IDOT STANDARD DETAILS FOR DESIGN DETAILS OF PORTLAND CEMENT CONCRETE HANDHOLE, LIGHT POLE CONCRETE FOUNDATION, LIGHT POLE IDENTIFICATION, LIGHT POLE WIRING, AND BREAKAWAY TRANSFORMER BASE.
3. REFER TO LIGHTING CIRCUIT WIRING DIAGRAM SHEET FOR CIRCUITING DETAILS.
4. REFER TO LEGEND FOR SYMBOLOGY DETAILS.
5. ALL R# AND Y# FIXTURES ON THIS SHEET ARE CIRCUITED TO LIGHTING CONTROLLER LC-4.

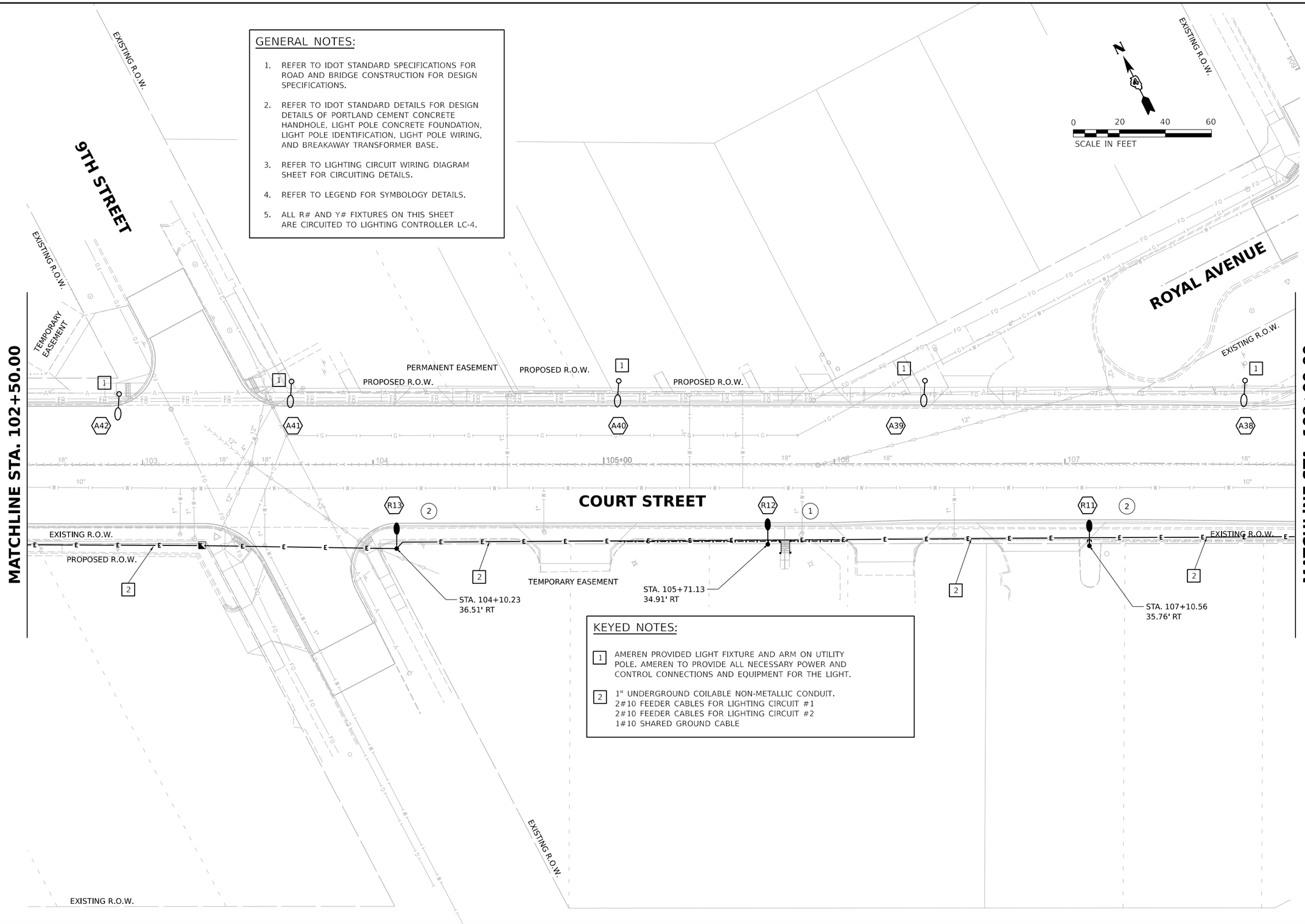

KEYED NOTES:

1. AMEREN PROVIDED LIGHT FIXTURE AND ARM ON UTILITY POLE. AMEREN TO PROVIDE ALL NECESSARY POWER AND CONTROL CONNECTIONS AND EQUIPMENT FOR THE LIGHT.
2. 1" UNDERGROUND COILABLE NON-METALLIC CONDUIT.
   2#10 FEEDER CABLES FOR LIGHTING CIRCUIT #1
   2#10 FEEDER CABLES FOR LIGHTING CIRCUIT #2
   1#10 SHARED GROUND CABLE

©Copyright Hanson Professional Services Inc. 2025

HANSON
Hanson Professional Services Inc.

DESIGNED	SN/RN	7/26/2023 12:00:00 AM
DRAWN	SN	7/26/2023 12:00:00 AM
REVIEWED	MGD	10/25/2024 12:00:00 AM

MODEL: sht-light02
FILE NAME: I:\13jobs\13L0177A\CAD\Road\Sheet\Plan-Set 3 (8th-10th)\sht-light02.dgn

Final	USER NAME = ander00846	DESIGNED - SN/RN	REVISED -	STATE OF ILLINOIS DEPARTMENT OF TRANSPORTATION
		DRAWN - SN	REVISED -	
	PLOT SCALE = 0.16666667 ' / in.	CHECKED - MGD	REVISED -	
	PLOT DATE = 3/26/2025	DATE - 10/25/2024 12:00:00 AM	REVISED -	

COURT STREET
LIGHTING PLANS

SCALE: 1" = 20' | SHEET OF SHEETS | STA. TO STA.

F.A.P. RTE.	SECTION	COUNTY	TOTAL SHEETS	SHEET NO.
693	20-00196-01-RS	TAZEWELL	136	95
	13L0177A	CONTRACT NO. 89859		
		ILLINOIS	FED. AID PROJECT	

KEYED NOTES:

1. AMEREN PROVIDED LIGHT FIXTURE AND ARM ON UTILITY POLE. AMEREN TO PROVIDE ALL NECESSARY POWER AND CONTROL CONNECTIONS AND EQUIPMENT FOR THE LIGHT.
2. INTERSECTION LIGHT FIXTURE MOUNTED TO TRAFFIC SIGNAL LIGHT POLE. REFER TO TRAFFIC SIGNAL PLANS FOR MORE DETAILS.
3. 2#10 FEEDER CABLES FOR LIGHTING CIRCUIT #1
   2#10 FEEDER CABLES FOR LIGHTING CIRCUIT #2
   1#10 SHARED GROUND CABLE
   ROUTED INSIDE 4" TRAFFIC SIGNAL CONDUIT.
   REFER TO TRAFFIC SIGNAL PLANS FOR MORE DETAILS.
4. TRAFFIC SIGNAL HANDHOLE. UTILIZE FOR ROUTING LIGHTING CIRCUITS. REFER TO TRAFFIC SIGNAL PLANS FOR MORE DETAILS.

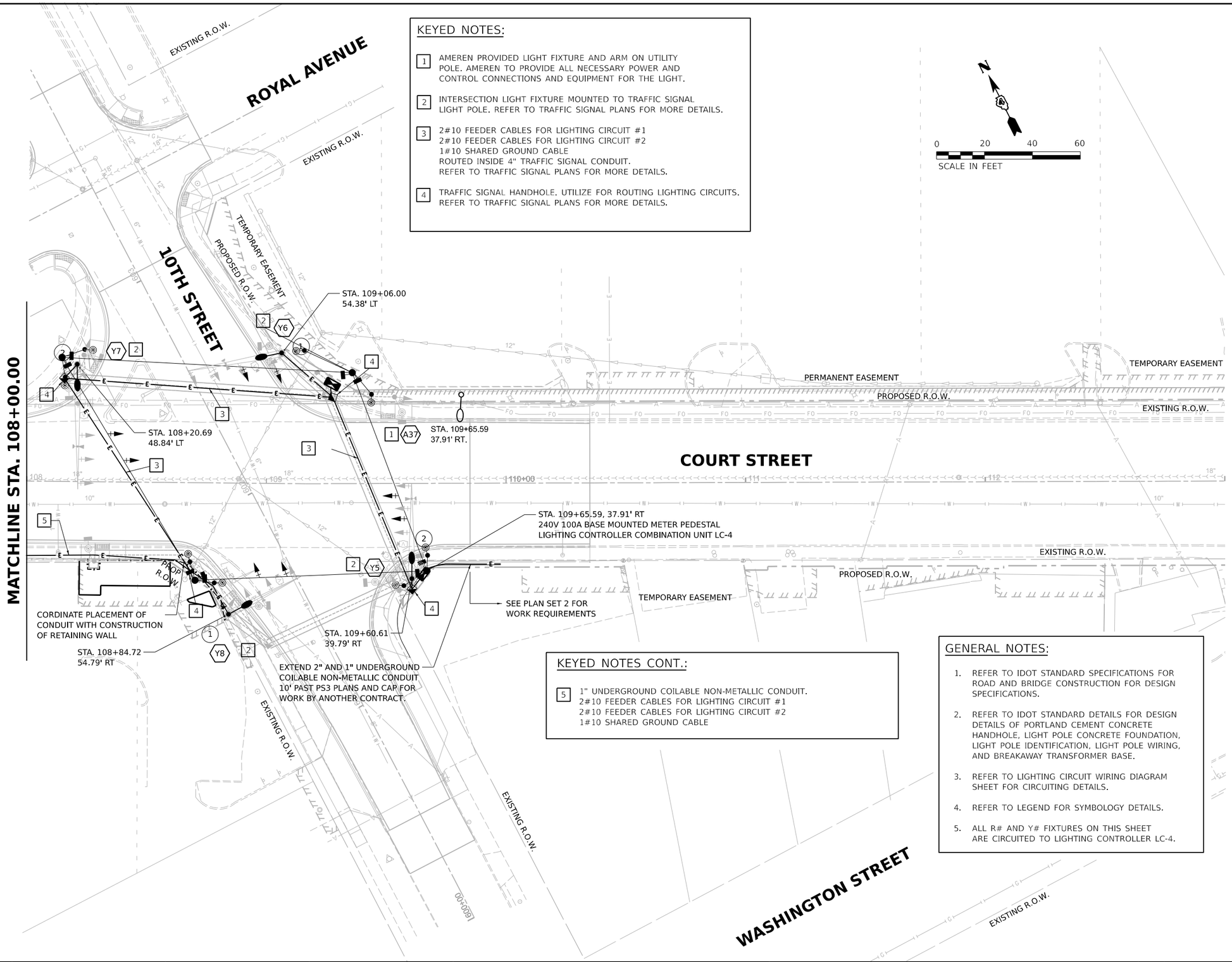

KEYED NOTES CONT.:

5. 1" UNDERGROUND COILABLE NON-METALLIC CONDUIT.
   2#10 FEEDER CABLES FOR LIGHTING CIRCUIT #1
   2#10 FEEDER CABLES FOR LIGHTING CIRCUIT #2
   1#10 SHARED GROUND CABLE

GENERAL NOTES:

1. REFER TO IDOT STANDARD SPECIFICATIONS FOR ROAD AND BRIDGE CONSTRUCTION FOR DESIGN SPECIFICATIONS.
2. REFER TO IDOT STANDARD DETAILS FOR DESIGN DETAILS OF PORTLAND CEMENT CONCRETE HANDHOLE, LIGHT POLE CONCRETE FOUNDATION, LIGHT POLE IDENTIFICATION, LIGHT POLE WIRING, AND BREAKAWAY TRANSFORMER BASE.
3. REFER TO LIGHTING CIRCUIT WIRING DIAGRAM SHEET FOR CIRCUITING DETAILS.
4. REFER TO LEGEND FOR SYMBOLOGY DETAILS.
5. ALL R# AND Y# FIXTURES ON THIS SHEET ARE CIRCUITED TO LIGHTING CONTROLLER LC-4.

© Copyright Hanson Professional Services Inc. 2025

HANSON
Hanson Professional Services Inc.

DESIGNED	SN/RN	7/26/2023 12:00:00 AM
DRAWN	SN	7/26/2023 12:00:00 AM
REVIEWED	MGD	10/25/2024 12:00:00 AM

MODEL: sht-light03
FILE NAME: I:\13jobs\13L0177A\CAD\RoadSheet\Plan-Set 3 (8ts-10th)\sht-light03.dgn

Final

USER NAME = ander00846	DESIGNED - SN/RN	REVISED -	
	DRAWN - SN	REVISED -	
PLOT SCALE = 0.16666667 ' / in.	CHECKED - MGD	REVISED -	
PLOT DATE = 3/26/2025	DATE - 10/25/2024 12:00:00 AM	REVISED -	

STATE OF ILLINOIS
DEPARTMENT OF TRANSPORTATION

COURT STREET
LIGHTING PLANS

SCALE: 1" = 20' | SHEET OF SHEETS | STA. TO STA.

F.A.P. RTE.	SECTION	COUNTY	TOTAL SHEETS	SHEET NO.
693	20-00196-01-RS	TAZEWELL	136	96
	13L0177A	CONTRACT NO. 89859		
		ILLINOIS	FED. AID PROJECT	

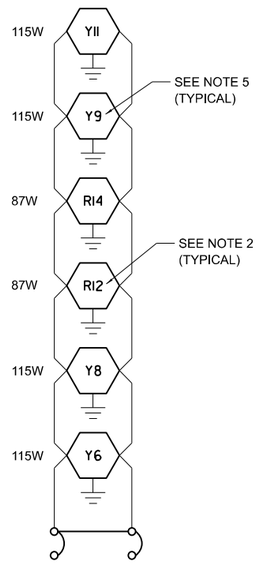

20 AMP, 2-POLE BREAKER

CIRCUIT 1

LIGHTING CONTROLLER (LC-4)
100 AMP, 240 VOLT, SINGLE PHASE,
634 VA TOTAL LOAD
1.95% VOLTAGE DROP

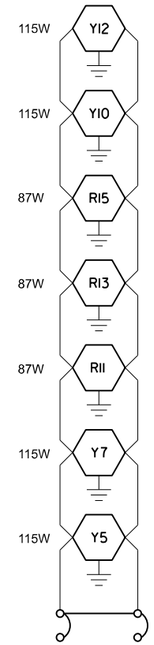

20 AMP, 2-POLE BREAKER

CIRCUIT 2

LIGHTING CONTROLLER (LC-4)
100 AMP, 240 VOLT, SINGLE PHASE,
721 VA TOTAL LOAD
2.25% VOLTAGE DROP

GENERAL NOTES

1. LIGHTING CONTROLLER (LC-4) IS LOCATED AT THE SOUTHEAST CORNER OF THE COURT STREET AND 10TH STREET INTERSECTION. SEE PLANS FOR DETAILS.
2. 87 WATT LED ROADWAY LIGHTING FIXTURES (IDOT "E" OUTPUT DESIGNATION) HAVE A "R#" DESIGNATION
3. ALL SPLICES ARE TO BE MADE IN THE LIGHT POLE AT THE POLE HANDHOLE AND NOT IN THE IN-GRADE HANDHOLES PER ARTICLE 1066.06 OF THE STANDARD SPECIFICATIONS.
4. SEE PLANS FOR LOCATIONS OF LUMINAIRES.
5. 115 WATT LED INTERSECTION LIGHTING FIXTURES (IDOT "G" OUTPUT DESIGNATION) HAVE A "Y#" DESIGNATION.

© Copyright Hanson Professional Services Inc. 2025

HANSON
Hanson Professional Services Inc.

DESIGNED	SN/RN	7/26/2023 12:00:00 AM
DRAWN	SN	7/26/2023 12:00:00 AM
REVIEWED	MGD	10/25/2024 12:00:00 AM

MODEL: sht-lightdet01
FILE NAME: I:\13jobs\13L0177A\CADRoad\Sheet\Plan-Set 3 (8th-10th)\sht-lightdet01.dgn

Final	USER NAME = ander00846	DESIGNED - SN/RN	REVISED -	STATE OF ILLINOIS DEPARTMENT OF TRANSPORTATION
		DRAWN - SN	REVISED -	
	PLOT SCALE = 0.16666667 ' / in.	CHECKED - MGD	REVISED -	
	PLOT DATE = 3/26/2025	DATE - 10/25/2024 12:00:00 AM	REVISED -	

COURT STREET
LIGHTING CONTROLLER CIRCUITING DIAGRAM

SCALE: N/A | SHEET OF SHEETS | STA. TO STA.

F.A.P. RTE.	SECTION	COUNTY	TOTAL SHEETS	SHEET NO.
693	20-00196-01-RS	TAZEWELL	136	97
	13L0177A	CONTRACT NO. 89859		
		ILLINOIS	FED. AID PROJECT	

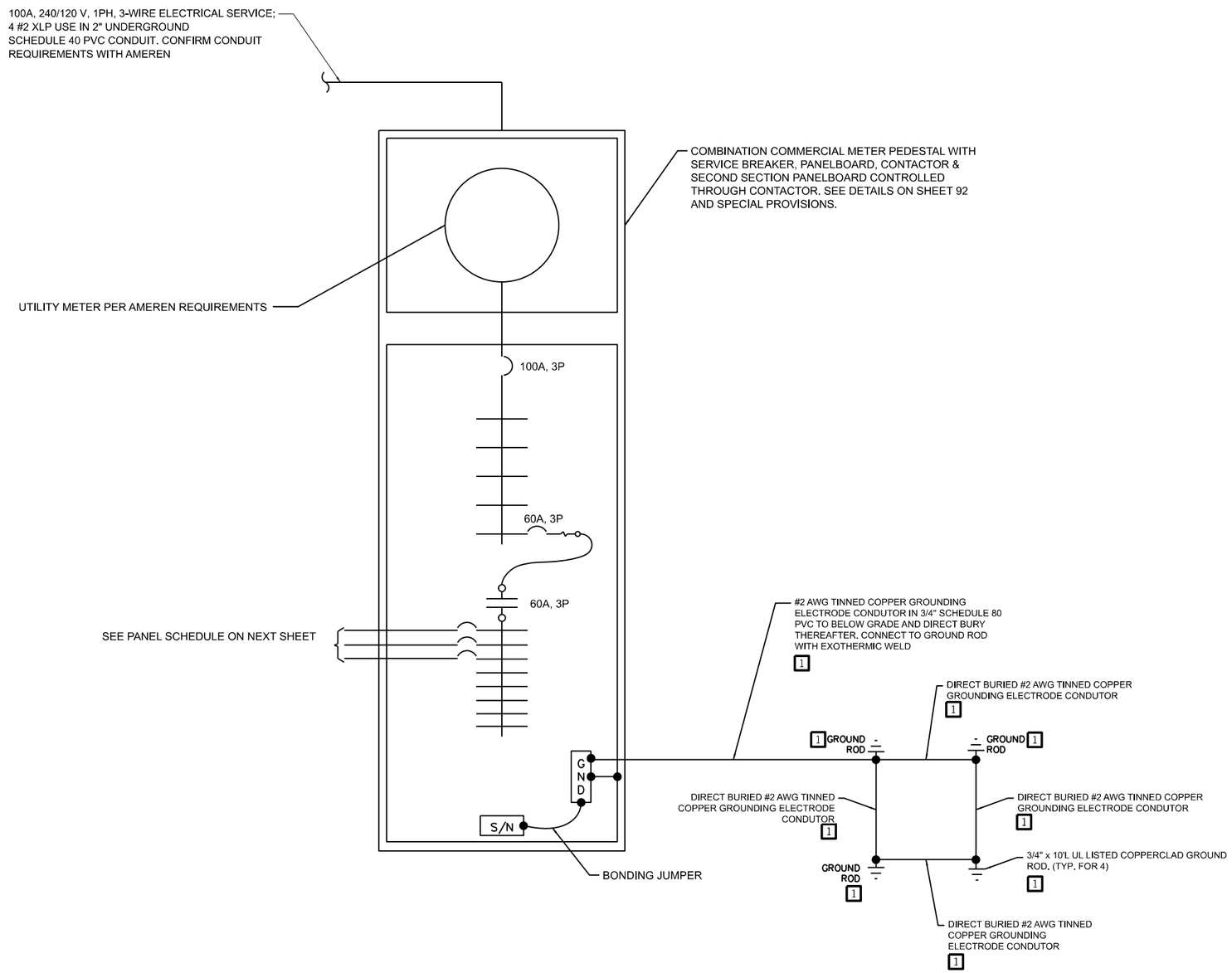

1 COMMERCIAL PEDESTAL LC-4 ONE-LINE DIAGRAM

SCALE: NONE

KEYED NOTES:

1. LABOR AND MATERIAL COST FOR THE LIGHTING CONTROLLER UNIT LC-4 GROUNDING SYSTEM IS INCIDENTIAL TO THE PAY ITEM "METER PEDESTAL AND LIGHTING CONTROLLER COMBINATION UNIT, SPECIAL".

© Copyright Hanson Professional Services Inc. 2025

HANSON
Hanson Professional Services Inc.

DESIGNED	SN/RN	7/26/2023 12:00:00 AM
DRAWN	SN	7/26/2023 12:00:00 AM
REVIEWED	MGD	10/25/2024 12:00:00 AM

MODEL: sht-lightdet02
FILE NAME: I:\13jobs\13L0177A\CADRoadSheets\Plan-Set 3 (8th-10th)\sht-lightdet02.dgn

Final	USER NAME = ander00846	DESIGNED - SN/RN	REVISED -	
		DRAWN - SN	REVISED -	
	PLOT SCALE = 0.16666667 ' / in.	CHECKED - MGD	REVISED -	
	PLOT DATE = 3/26/2025	DATE - 10/25/2024 12:00:00 AM	REVISED -	

STATE OF ILLINOIS
DEPARTMENT OF TRANSPORTATION

COURT STREET
ELECTRICAL ONE-LINE DIAGRAM

SCALE: N/A | SHEET OF SHEETS | STA. TO STA.

F.A.P. RTE.	SECTION	COUNTY	TOTAL SHEETS	SHEET NO.
693	20-00196-01-RS	TAZEWELL	136	98
	13L0177A	CONTRACT NO. 89859		
		ILLINOIS	FED. AID PROJECT	

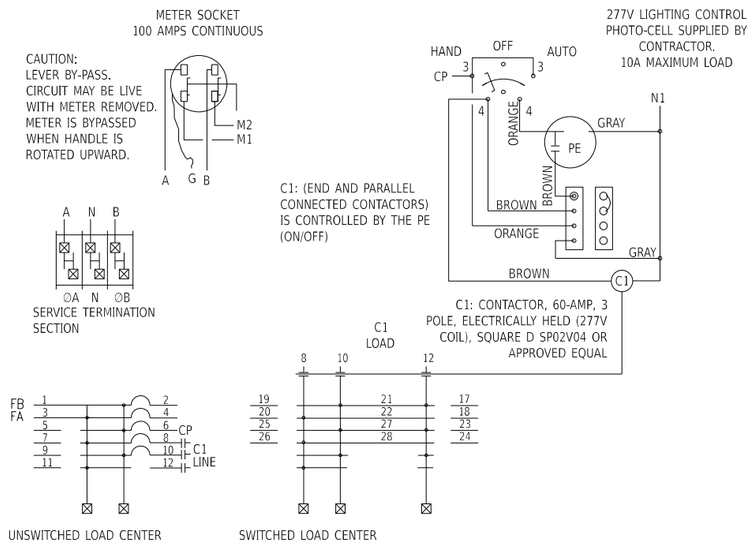

1 WIRING DIAGRAM

SCALE: NONE

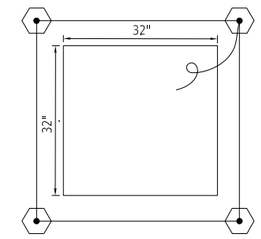

2A LIGHTING CONTROLLER PAD PLAN VIEW

SCALE: NONE

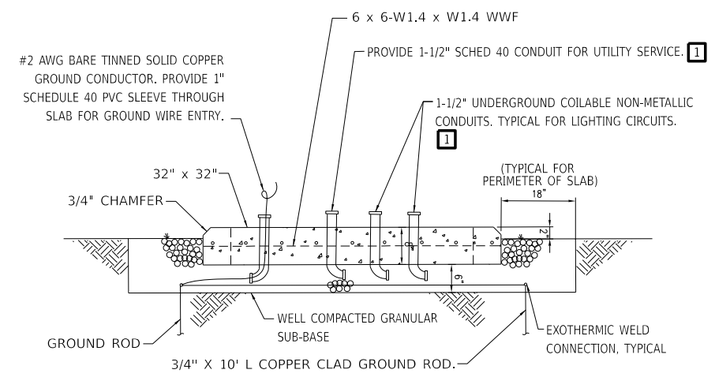

KEYED NOTES:

1 TRANSITION TO PVC COATED RGS CONDUIT WHERE EMERGING FROM GRADE INTO THE FOUNDATION PAD. PVC COATED RGS CONDUIT LABOR AND MATERIAL COST IS INCIDENTIAL TO THE PAY ITEM "METER PEDESTAL AND LIGHTING CONTROLLER COMBINATION UNIT, SPECIAL".

2B LIGHTING CONTROLLER PAD SECTION DETAIL

SCALE: NONE

PANEL LC-4

100 A MAIN BREAKER 120 / 240 VOLT 1 PHASE 3 WIRE PAD MOUNTED

VOLT- AMP	CIR. NO.	LOAD	CB	P	Ø	P	CB	LOAD	CIR. NO.	VOLT- AMP
UNSWITCHED SECTION OF PANEL										
	1	NON USABLE SPACE			A	2	100	BACK FED MAIN BREAKER	2	
	3				B				4	
2500	5	TRAFFIC SIGNAL CABINET/8TH ST.	30	1	A	1	20	CONTROL CIRCUIT	6	250
2500	7	TRAFFIC SIGNAL CABINET/10TH ST.	20	1	B	2	60	FEEDER TO SWITCHED SECTION OF PANEL	8	
	9	SPARE	20	1	A				10	
	11	SPACE	-	-	B	-	-	SPACE	12	
SWITCHED SECTION OF PANEL										
317	13	LIGHTING CIRCUIT 1	20	2	A	2	20	LIGHTING CIRCUIT 2	14	361
317	15				B				16	361
	17	BUSSED SPACE (FOR FUTURE LIGHTING)	-	-	A	-	-	BUSSED SPACE (FOR FUTURE LIGHTING)	18	
	19		-	-	B	-	-		20	
	21	BUSSED SPACE (FOR FUTURE LIGHTING)	-	-	A	-	-	BUSSED SPACE (FOR FUTURE LIGHTING)	22	
	23		-	-	B	-	-		24	

CIRCUIT BREAKERS SHALL HAVE A MINIMUM INTERRUPTING RATING OF 22000 RMS SYMMETRICAL AMPERES.

TOTAL CONNECTED LOAD =4.1 KVA

TOTAL DEMAND LOAD =4.1 KVA

PROVIDE COPPER GROUND BUS

PROVIDE A NEMA 3R ALUMINUM (ANODIZED) ENCLOSURE

© Copyright Hanson Professional Services Inc. 2025

HANSON
Hanson Professional Services Inc.

DESIGNED	SN/RN	7/26/2023 12:00:00 AM
DRAWN	SN	7/26/2023 12:00:00 AM
REVIEWED	MGD	10/25/2024 12:00:00 AM

MODEL: sht-lightdet03
FILE NAME: k:\Jobs\13L0177A\CADRoad\Sheet\Plan-Set 3 (8th-10th)\sht-lightdet03.dgn

Final

USER NAME = ander00846	DESIGNED - SN/RN	REVISED -	
	DRAWN - SN	REVISED -	
PLOT SCALE = 0.16666667 ' / in.	CHECKED - MGD	REVISED -	
PLOT DATE = 3/26/2025	DATE - 10/25/2024 12:00:00 AM	REVISED -	

STATE OF ILLINOIS
DEPARTMENT OF TRANSPORTATION

COURT STREET
ELECTRICAL LC-4 DETAILS & PANEL SCHEDULE

SCALE: N/A SHEET OF SHEETS STA. TO STA.

F.A.P. RTE.	SECTION	COUNTY	TOTAL SHEETS	SHEET NO.
693	20-00196-01-RS	TAZEWELL	136	99
	13L0177A	CONTRACT NO. 89859		

ILLINOIS FED. AID PROJECT

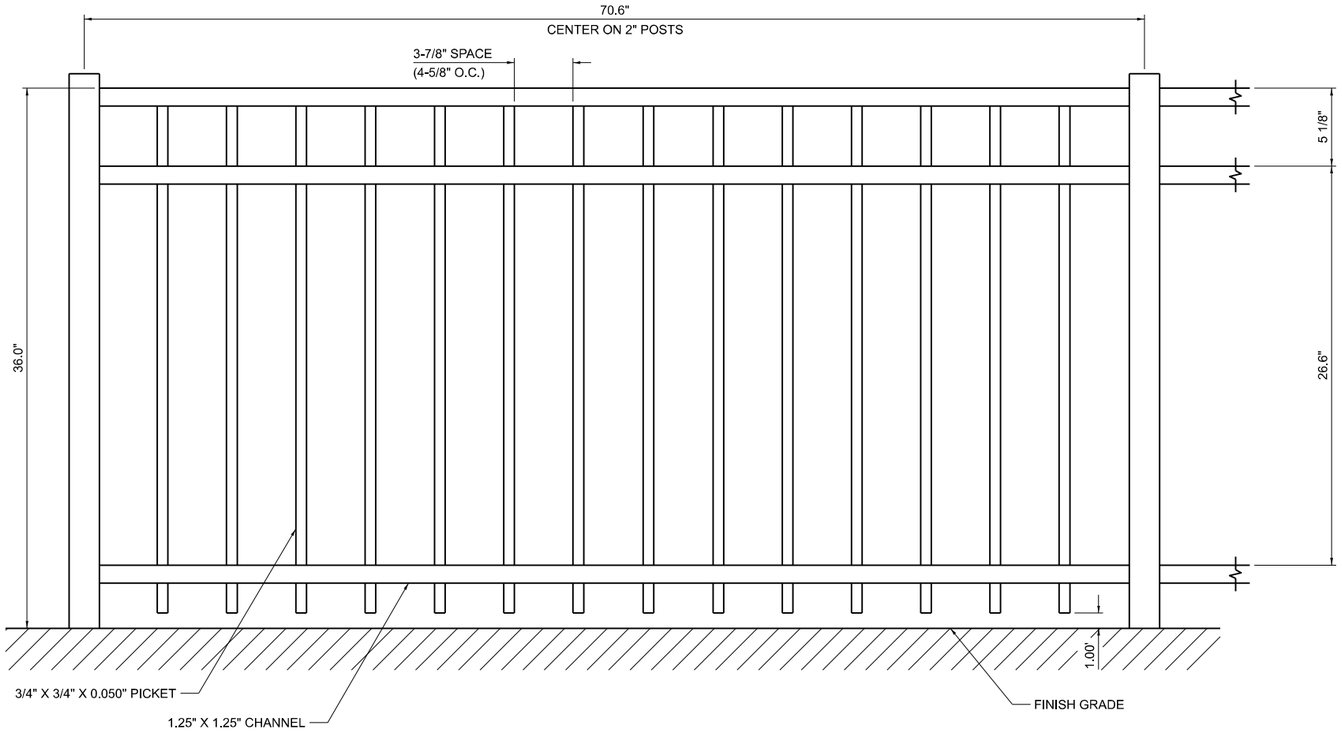

ORNAMENTAL ALUMINUM FENCING

(POWDER COATED BLACK)

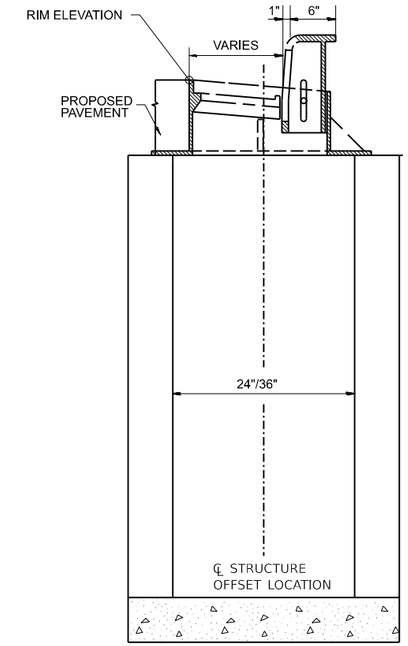

INLET, TYPE A/B

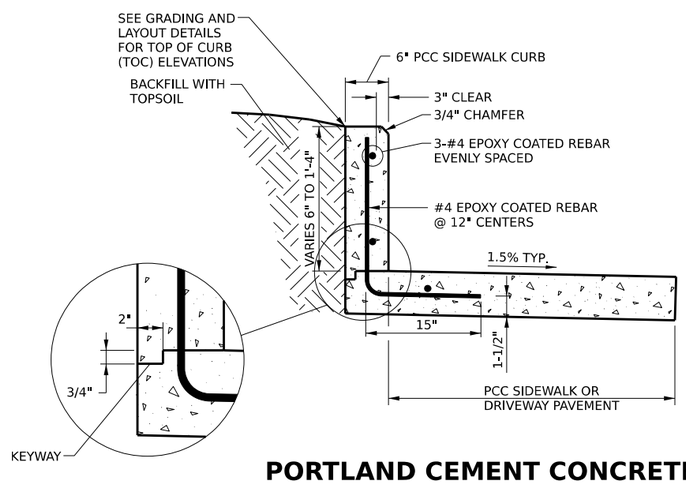

PORTLAND CEMENT CONCRETE SIDEWALK CURB DETAIL

(SIDEWALK MORE THAN 6" BELOW EXISTING GRADE)

NOTES:

1. SIDEWALK CURB MAY BE POURED MONOLITHIC WITH SIDEWALK OR DRIVEWAY IN WHICH CASE THE KEYWAY WILL NOT BE REQUIRED.
2. THE COST OF CONSTRUCTING THE ADDITIONAL SIDEWALK OR DRIVEWAY WIDTH BELOW THE SIDEWALK CURB AND FURNISHING AND INSTALLING THE #4 REBARS SHALL BE INCLUDED IN THE COST OF THE PORTLAND CEMENT CONCRETE SIDEWALK CURB, AND NO ADDITIONAL COMPENSATION WILL BE ALLOWED. THE REINFORCEMENT BARS SHALL BE EPOXY COATED. THE PCC SIDEWALK OR DRIVEWAY ADJACENT TO THE SIDEWALK CURB WILL BE PAID FOR SEPARATELY.

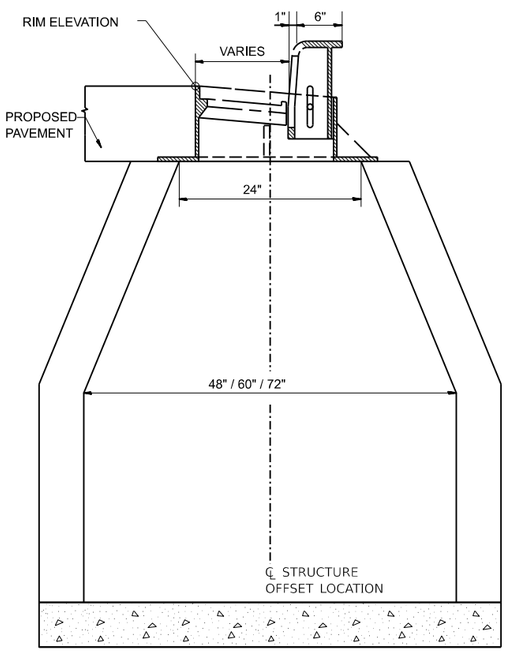

MANHOLE, TYPE A

© Copyright Hanson Professional Services Inc. 2025
HANSON
Hanson Professional Services Inc.

DESIGNED	JFC	7/26/2023 12:00:00 AM
DRAWN	RLA	7/26/2023 12:00:00 AM
REVIEWED	MGD	10/25/2024 12:00:00 AM

MODEL: detail01
FILE NAME: k:\Jobs\13L0177A\CADRoad\Sheet\Plan-Set 3 (8th-10th)\sht-detail01.dgn

Final

USER NAME = ander00846	DESIGNED - SD/JC	REVISED -	
	DRAWN - RA/CL	REVISED -	
PLOT SCALE = 0.16666667 ' / in.	CHECKED - MGD	REVISED -	
PLOT DATE = 3/26/2025	DATE - 10/25/2024 12:00:00 AM	REVISED -	

STATE OF ILLINOIS
DEPARTMENT OF TRANSPORTATION

COURT STREET
MISCELLANEOUS DETAILS

SCALE: N/A | SHEET OF SHEETS | STA. TO STA.

F.A.P. RTE.	SECTION	COUNTY	TOTAL SHEETS	SHEET NO.
693	20-00196-01-RS	TAZEWELL	136	100
	13L0177A	CONTRACT NO. 89859		
		ILLINOIS	FED. AID PROJECT	

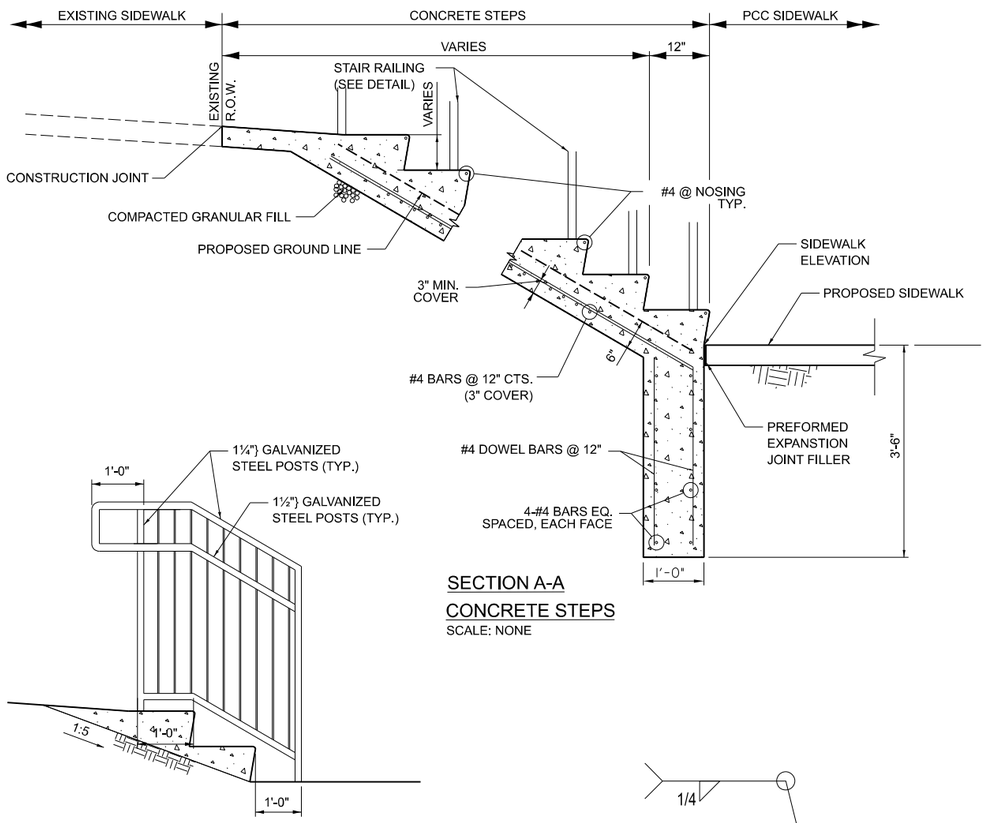

SECTION A-A

CONCRETE STEPS

SCALE: NONE

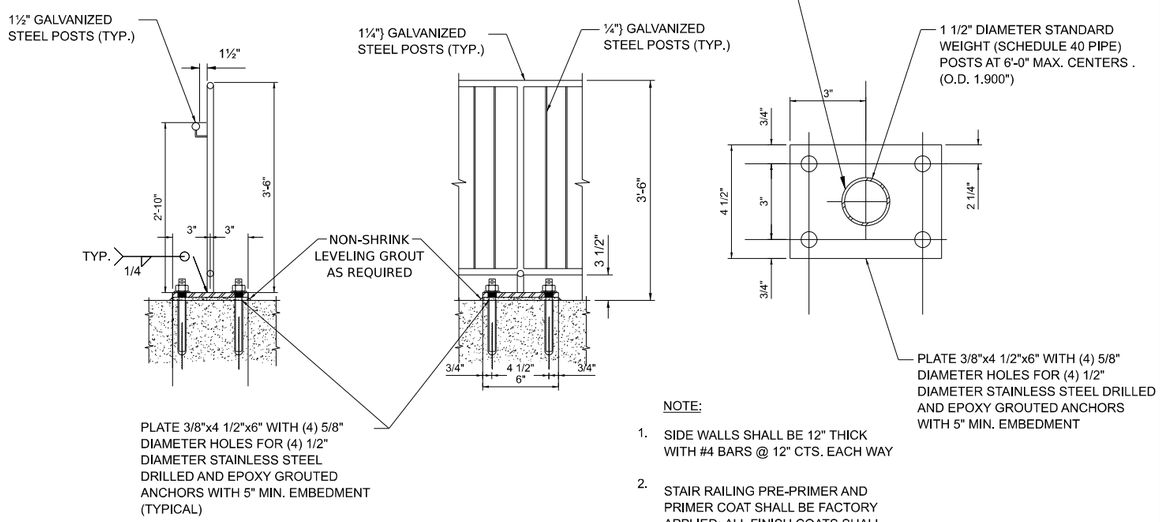

STAIR RAILING

SCALE: NONE

NOTE:

1. SIDE WALLS SHALL BE 12" THICK WITH #4 BARS @ 12" CTS. EACH WAY
2. STAIR RAILING PRE-PRIMER AND PRIMER COAT SHALL BE FACTORY APPLIED; ALL FINISH COATS SHALL BE APPLIED BLACK EPOXY.

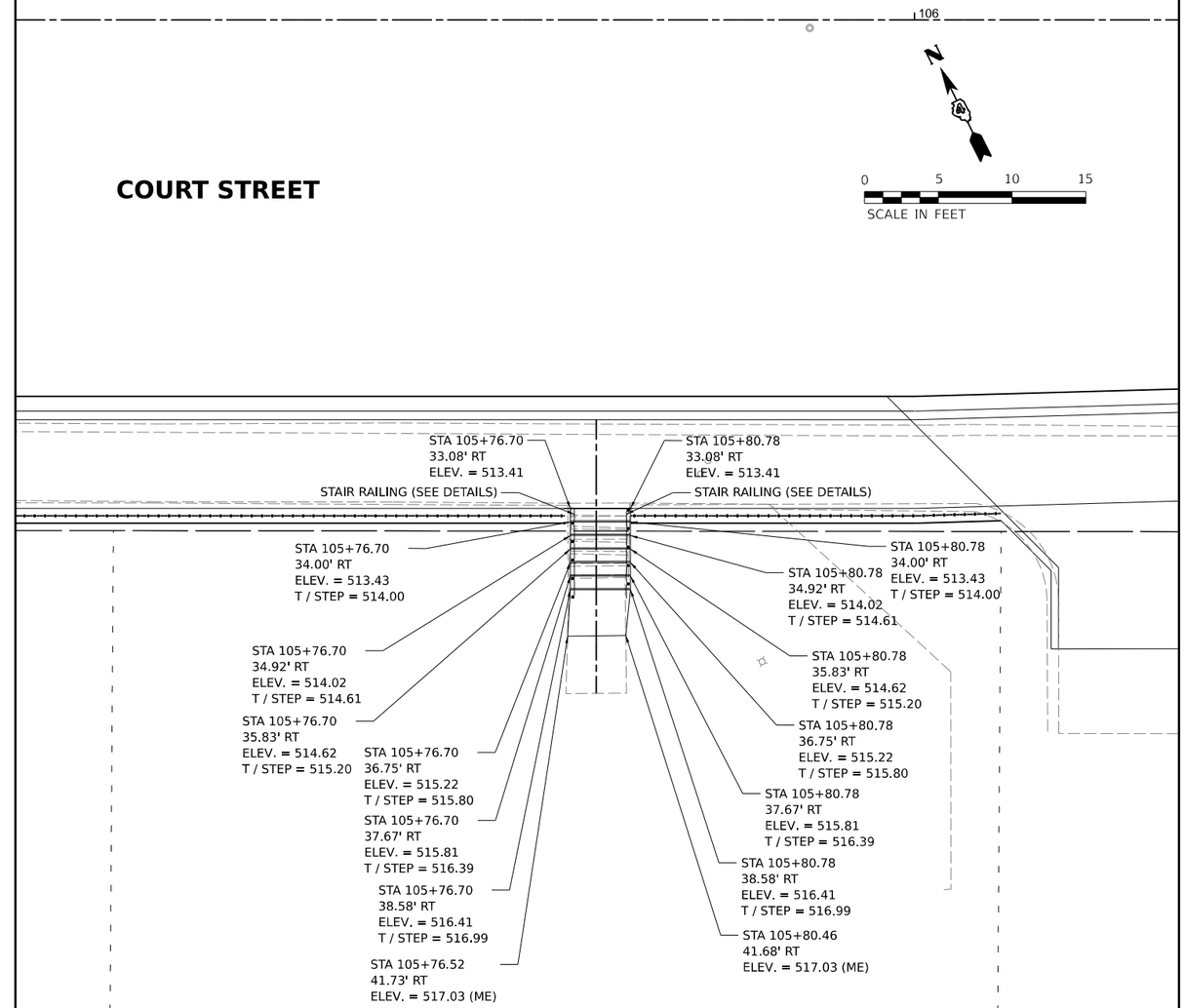

© Copyright Hanson Professional Services Inc. 2025

HANSON
Hanson Professional Services Inc.

DESIGNED	JC	7/26/2023 12:00:00 AM
DRAWN	RLA	7/26/2023 12:00:00 AM
REVIEWED	MGD	10/25/2024 12:00:00 AM

MODEL: sht-detail02
FILE NAME: K:\Jobs\13L0177A\CAD\Road\Sheet\Plan-Set 3 (8th-10th)\sht-detail02.dgn

Final

USER NAME	= ander00846	DESIGNED -	SD/JC	REVISED -	
		DRAWN -	RA/CL	REVISED -	
PLOT SCALE	= 0.16666667 ' / in.	CHECKED -	MGD	REVISED -	
PLOT DATE	= 3/26/2025	DATE -	10/25/2024 12:00:00 AM	REVISED -	

STATE OF ILLINOIS
DEPARTMENT OF TRANSPORTATION

COURT STREET
CONCRETE STEPS DETAILS

SCALE: N/A | SHEET OF SHEETS | STA. TO STA.

F.A.P. RTE.	SECTION	COUNTY	TOTAL SHEETS	SHEET NO.
693	20-00196-01-RS	TAZEWELL	136	101
	13L0177A	CONTRACT NO. 89859		
	ILLINOIS	FED. AID PROJECT		

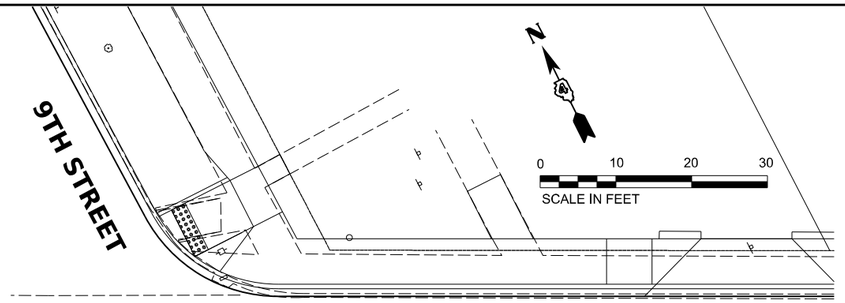

WALL NO. 1				
PNT#	WALL STA.	COURT ST.		
		STA.	OFFSET	LT/RT
1A	10+96.14	105+06.55	34	RT
1B	11+66.30	105+76.71	34	RT
1C	11+66.30	105+76.73	38	RT

WALL NO. 2				
PNT#	WALL STA.	COURT ST.		
		STA.	OFFSET	LT/RT
2A	11+70.38	105+80.79	34	RT
2B	11+70.38	105+80.81	38	RT
2C	11+95.46	106+05.87	35	RT
2D	11+98.63	106+09.26	42	RT

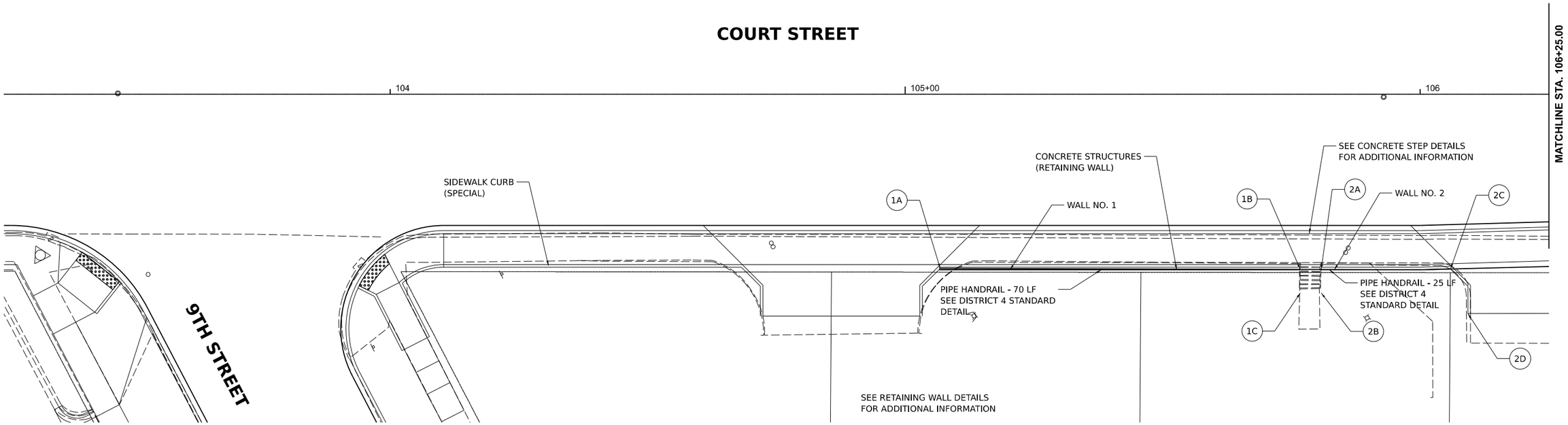

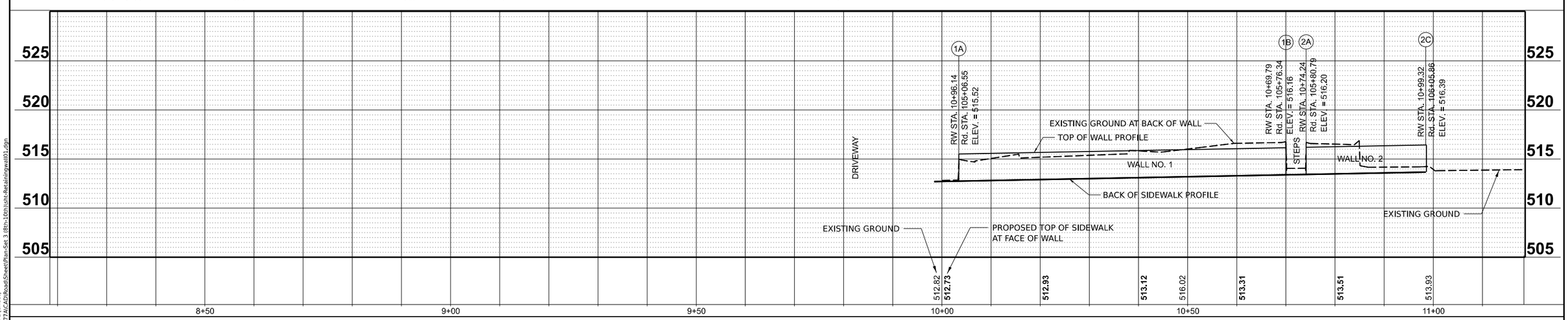

PLAN	
NOTE BOOK NO.	SURVEYED ____ PLOTTED ____ AUTOMENT CHECKED ____ RT. OF WAY CHECKED ____ CADD FILE NAME ____
BY	DATE

PROFILE	
NOTE BOOK NO.	SURVEYED ____ PLOTTED ____ GRADES CHECKED ____ B.M. NOTED ____ STRUCTURE NOTAT'NS CH'KD ____
BY	DATE

© Copyright Hanson Professional Services Inc. 2025

HANSON
Hanson Professional Services Inc.

DESIGNED	JFC	7/26/2023 12:00:00 AM
DRAWN	RLA	7/26/2023 12:00:00 AM
REVIEWED	MGD	10/25/2024 12:00:00 AM

MODEL: AL_CourtStrw - Plan 1 [Sheet]
FILE NAME: k:\13jobs\13L0177A\CAD\Road\Sheet\Plan-Set 3 (8th-10th)\sht-Retainingwall01.dgn

Final

USER NAME = ander00846	DESIGNED - SD/JC	REVISED -	
	DRAWN - RA/CL	REVISED -	
PLOT SCALE = 0.16666667 ' / in.	CHECKED - MGD	REVISED -	
PLOT DATE = 3/26/2025	DATE - 10/25/2024 12:00:00 AM	REVISED -	

STATE OF ILLINOIS
DEPARTMENT OF TRANSPORTATION

COURT STREET
RETAINING WALL DETAIL

SCALE: 1" = 10' | SHEET OF SHEETS | STA. TO STA.

F.A.P. RTE.	SECTION	COUNTY	TOTAL SHEETS	SHEET NO.
693	20-00196-01-RS	TAZEWELL	136	102
	13L0177A	CONTRACT NO. 89859		
		ILLINOIS	FED. AID PROJECT	

NOTE:
1. WALL NO. 3 INTENTIONALLY OMITTED
2. RETAINING WALL (RW) BOTTOM TO MATCH BACK OF SIDEWALK ELEVATION. SIDEWALK RAMP FOR ADA CROSSING WILL NOT AFFECT TOP OF WALL ELEVATION.

WALL NO. 4				
PNT#	WALL STA.	COURT ST.		
		STA.	OFFSET	LT/RT
4A	13+19.29	108+25.28	32	RT
4B	13+19.29	108+25.28	37	RT
4C	13+25.29	108+31.27	37	RT
4D	13+73.92	108+75.96	43.23	RT
4E	13+81.81	108+81.08	49.23	RT

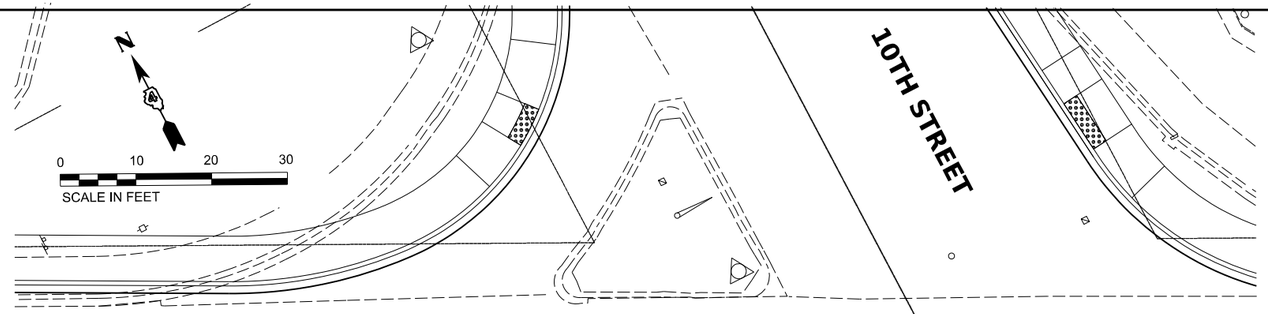

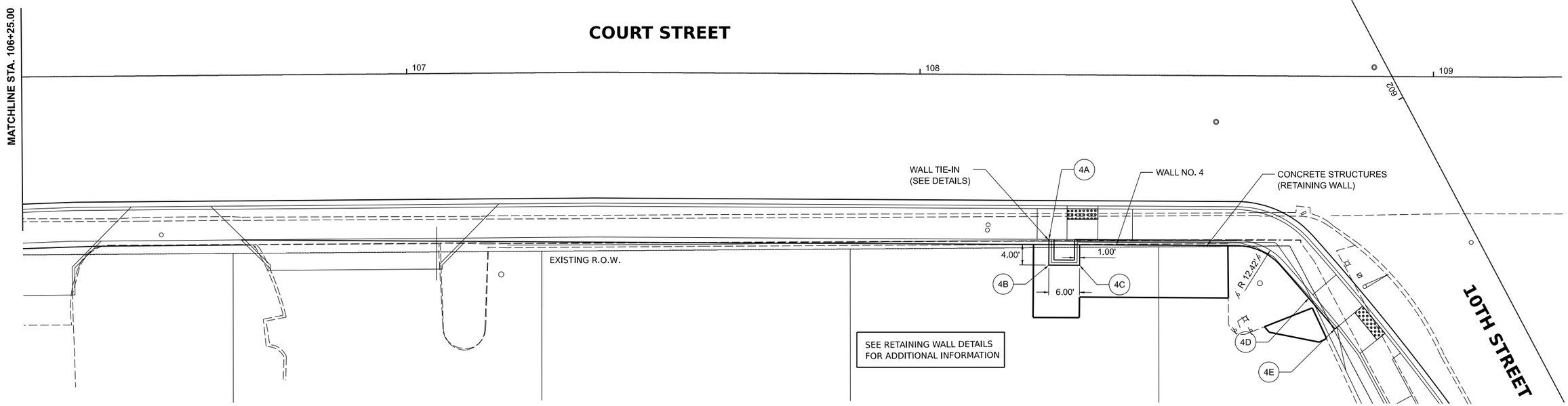

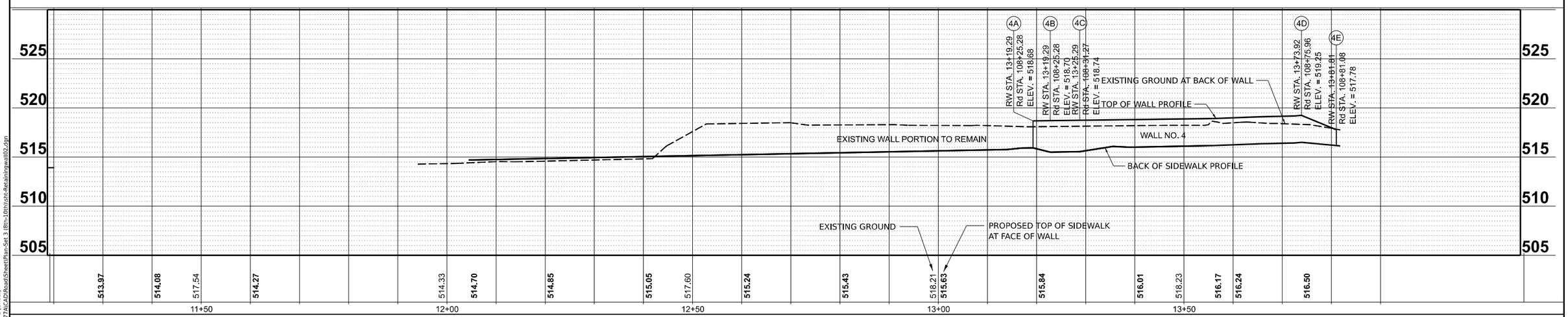

PLAN		BY	DATE
NOTE BOOK NO.	SURVEYED		
	PLOTTED		
	AUTHENT CHECKED		
	RT. OF WAY CHECKED		
	CADD FILE NAME		

PROFILE		BY	DATE
NOTE BOOK NO.	SURVEYED		
	PLOTTED		
	CHANGES CHECKED		
	B.M. NOTED		
	STRUCTURE NOTATNS CHKD		

© Copyright Hanson Professional Services Inc. 2025

HANSON
Hanson Professional Services Inc.

DESIGNED	JFC	7/26/2023 12:00:00 AM
DRAWN	RLA	7/26/2023 12:00:00 AM
REVIEWED	MGD	10/25/2024 12:00:00 AM

MODEL: AL_CourtStrw - Plan 2 [Sheet]
FILE NAME: I:\13jobs\13L0177A\CAD\Road\Sheet\Plan-Set 3 (8th-10th)\sht-Retainingwall02.dgn

Final

USER NAME = ander00846	DESIGNED - SD/JC	REVISED -	
	DRAWN - RA/CL	REVISED -	
PLOT SCALE = 0.16666667 ' / in.	CHECKED - MGD	REVISED -	
PLOT DATE = 3/26/2025	DATE - 10/25/2024 12:00:00 AM	REVISED -	

STATE OF ILLINOIS
DEPARTMENT OF TRANSPORTATION

COURT STREET
RETAINING WALL DETAIL

SCALE: 1" = 10' | SHEET OF SHEETS | STA. TO STA.

F.A.P. RTE.	SECTION	COUNTY	TOTAL SHEETS	SHEET NO.
693	20-00196-01-RS	TAZEWELL	136	103
	13L0177A	CONTRACT NO. 89859		
	ILLINOIS	FED. AID PROJECT		

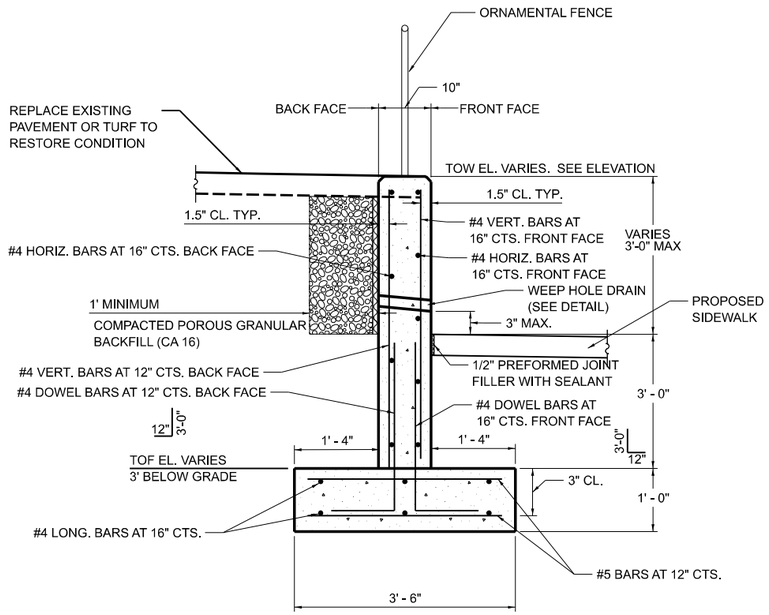

RETAINING WALL SECTION
SCALE: NONE

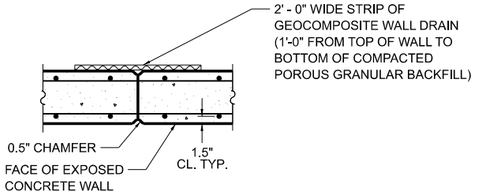

CONTROL / CONSTRUCTION JOINT
SCALE: NONE

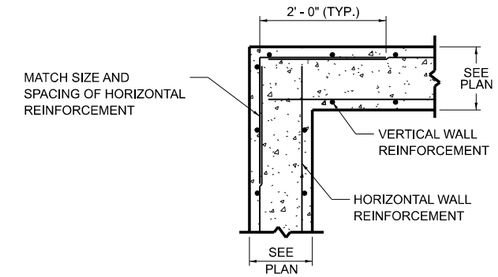

TYP. WALL CORNER
SCALE: NONE

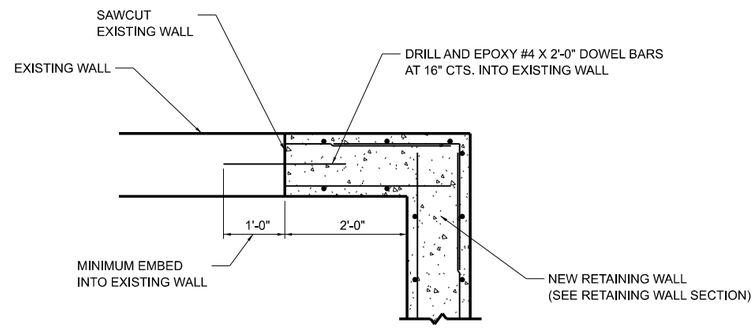

WALL TIE-IN DETAIL
SCALE: NONE

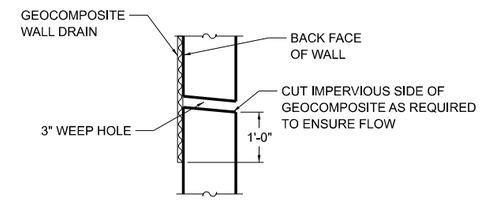

WEEP HOLE DRAIN DETAIL
SCALE: NONE

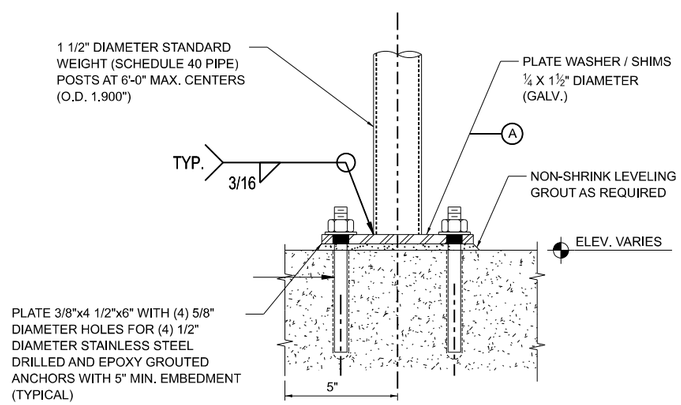

GUARD RAIL / HAND RAIL TOP MOUNT
SCALE: NONE

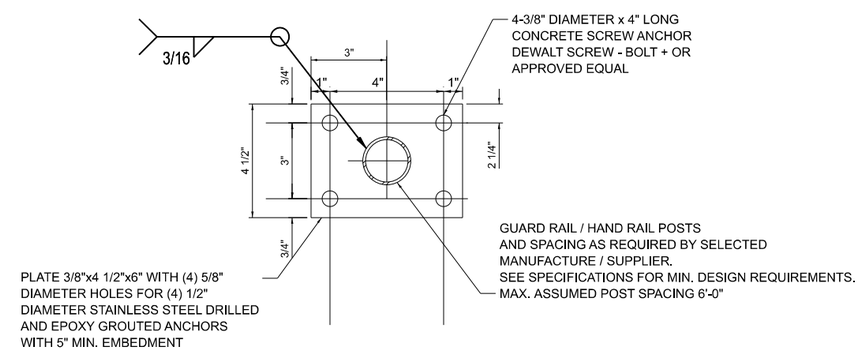

A GUARD RAIL / HAND RAIL TOP MOUNT
SCALE: NONE

NOTES:

1. LOCATE CONTROL JOINTS AT 7' - 0" MAX. CENTERS WHERE WALL IS EXPOSED TO VIEW. SEE ELEVATION PLAN ABOVE FOR JOINT LOCATIONS.
2. DISCONTINUE EVERY OTHER HORIZONTAL REINFORCEMENT BAR AT CONTROL JOINTS.
3. DO NOT LAP SPLICE REINFORCEMENT AT CONTROL JOINTS.
4. FOOTING WIDTH MAY BE REDUCED ADJACENT TO ANY STRUCTURES THAT WILL BE IN CONFLICT WITH THE FOOTING. ONCE THE FOOTING IS CLEAR OF THE CONFLICT, THE FOOTING WIDTH SHALL BE PER THE PLAN DETAILS.
5. ALL EXPOSED WALL SURFACES SHALL HAVE A RUBBED FINISH.
6. WEEP HOLES SHALL BE PREFORMED OR DRILLED AT GEOCOMPOSITE WALL DRAINS NO MORE THAN 3" ABOVE FINISH GRADE.

© Copyright Hanson Professional Services Inc. 2025
HANSON
Hanson Professional Services Inc.

DESIGNED	JFC	7/26/2023 12:00:00 AM
DRAWN	RLA	7/26/2023 12:00:00 AM
REVIEWED	MGD	10/25/2024 12:00:00 AM

MODEL: detail03
FILE NAME: I:\13jobs\13L0177A\CADRoad\Sheet\Plan-Set 3 (8th-10th)\ht-detail03.dgn

Final

USER NAME = ander00846	DESIGNED - SJS	REVISED -	
	DRAWN - RA/CL	REVISED -	
PLOT SCALE = 0.16666667 ' / in.	CHECKED - MGD	REVISED -	
PLOT DATE = 3/26/2025	DATE - 10/25/2024 12:00:00 AM	REVISED -	

STATE OF ILLINOIS
DEPARTMENT OF TRANSPORTATION

COURT STREET
CONCRETE RETAINING WALL DETAILS

SCALE: N/A | SHEET OF SHEETS | STA. TO STA.

F.A.P. RTE.	SECTION	COUNTY	TOTAL SHEETS	SHEET NO.
693	20-00196-01-RS	TAZEWELL	136	104
	13L0177A	CONTRACT NO. 89859		
		ILLINOIS	FED. AID PROJECT	

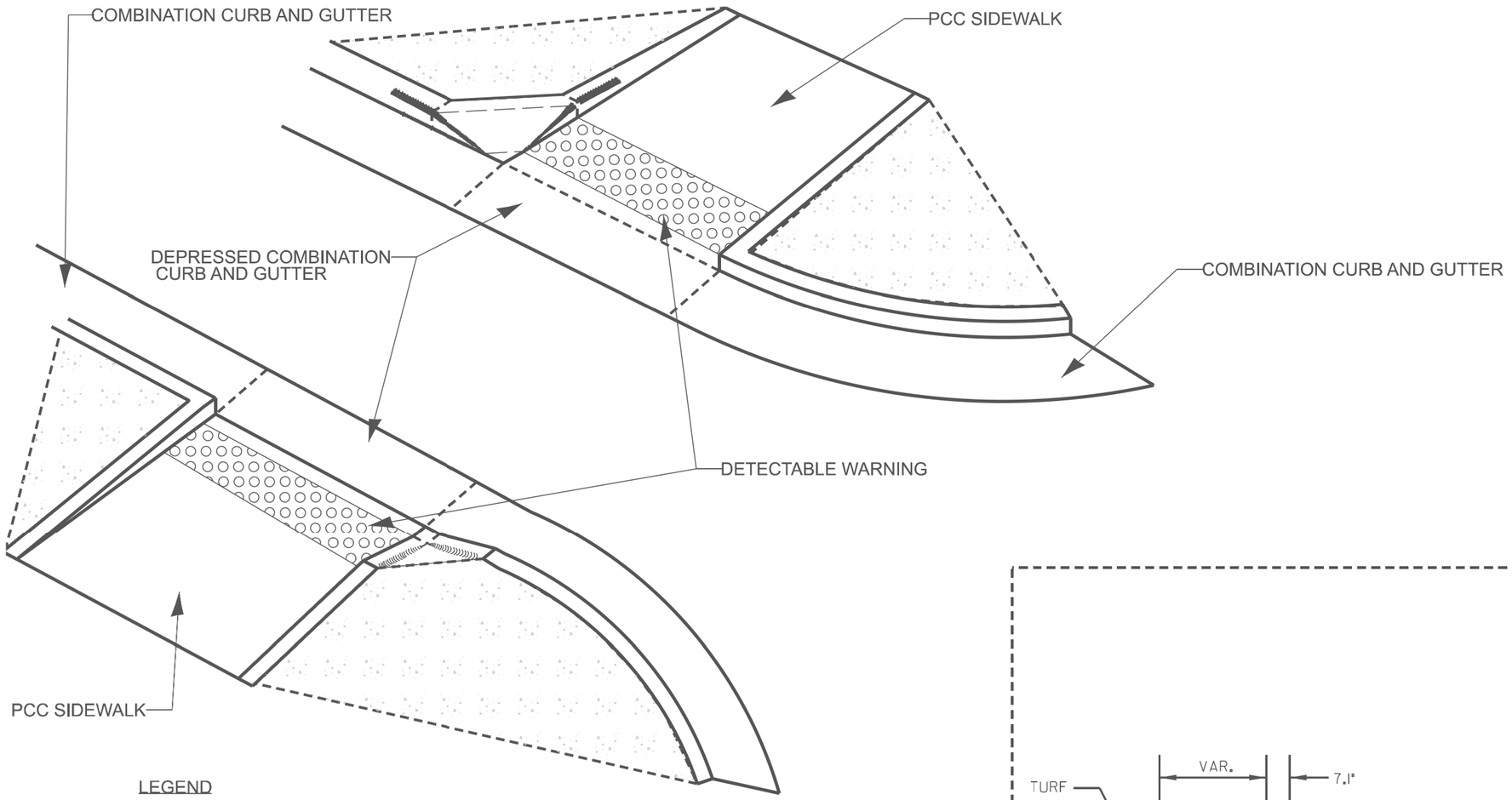

LEGEND

CONCRETE OR TURF

SIDE CURB

NOTES:

IF CONTRACTOR OR LOCAL AGENCY REQUESTS A VARIATION OF THE APPROACH NOSE, APPROVAL MUST BE MADE BY BOTH RESIDENT ENGINEER AND DISTRICT ADA COORDINATOR.

ALL DIMENSIONS ARE IN INCHES (MILLIMETERS) UNLESS OTHERWISE NOTED.

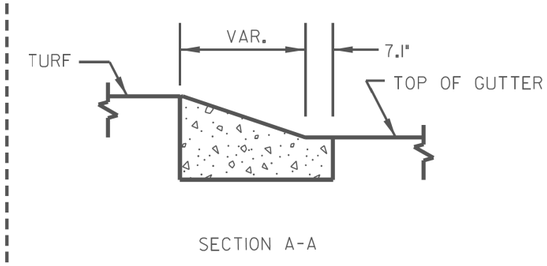

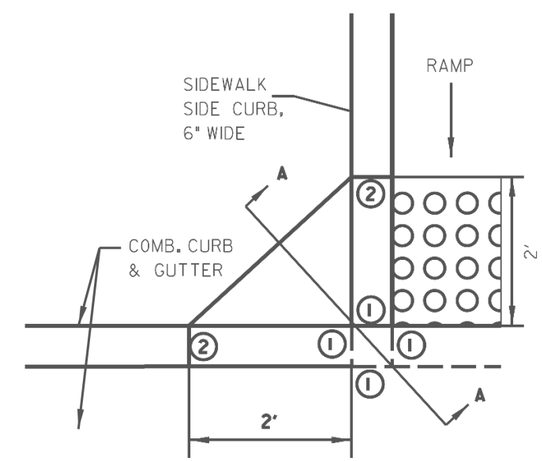

1 0" CURB HEIGHT.
2 FULL CURB HEIGHT.

APPROACH NOSE DETAIL

© Copyright Hanson Professional Services Inc. 2025
HANSON
Hanson Professional Services Inc.

DESIGNED	JFC	7/26/2023 12:00:00 AM
DRAWN	RLA	7/26/2023 12:00:00 AM
REVIEWED	MGD	10/25/2024 12:00:00 AM

MODEL: detail05
FILE NAME: E:\13jobs\13L0177A\CAD\RoadSheet\Plan-Set 3 (8th-10th)\sht-detail05.dgn

Final

USER NAME = ander00846	DESIGNED - SD/JC	REVISED -	STATE OF ILLINOIS DEPARTMENT OF TRANSPORTATION	COURT STREET SIDEWALK SIDE CURB APPROACH NOSE DETAIL	
	DRAWN - RA/CL	REVISED -			
PLOT SCALE = 0.16666667 ' / in.	CHECKED - MGD	REVISED -			
PLOT DATE = 3/26/2025	DATE - 10/25/2024 12:00:00 AM	REVISED -		SCALE: N/A SHEET OF SHEETS STA. TO STA.	

F.A.P. RTE.	SECTION	COUNTY	TOTAL SHEETS	SHEET NO.
693	20-00196-01-RS	TAZEWELL	136	105
	13L0177A	CONTRACT NO. 89859		
	ILLINOIS	FED. AID PROJECT		

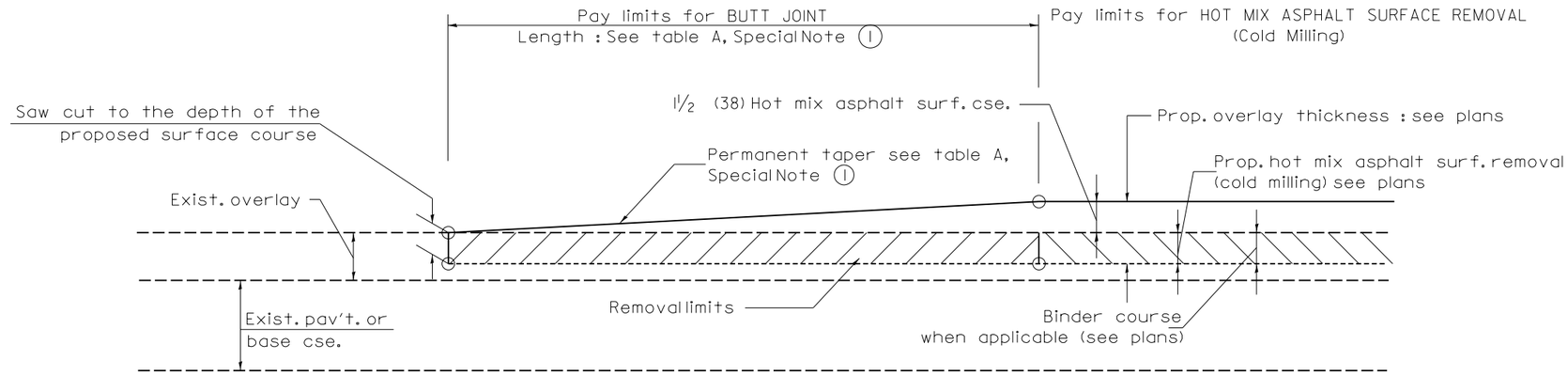

CASE 1: WITH HOT MIX ASPHALT SURFACE REMOVAL (COLD MILLING)

TABLE A
TAPER RATES

SPECIAL NOTE NUMBER	ELEMENT	MAINLINE INTERSTATES & 4-LANE EXPRESSWAYS	ALL OTHERS
1	BUTT JOINT TAPER RATE	1:480	1:240
2	TEMPORARY RAMP TAPER RATE	1:80	1:40

GENERAL NOTES

1. The work shall be done in accordance with Article 406.08 and the Special Provision for Butt Joints.
2. The pavement surface to be removed may be either bituminous or P.C. concrete. The work shall be performed in accordance with Article 440.04 and the Special Provisions for Butt Joints.
3. The saw cut joints shall be primed just prior to the placing of bituminous material. The work will be in accordance with the applicable portions of Article 406.05.
4. The length of butt joint is based on the taper rate times change in cold milling depth within the butt joint pay limits, unless otherwise indicated.
5. Temporary ramps are paid for separately and not included in the cost of the butt joints.

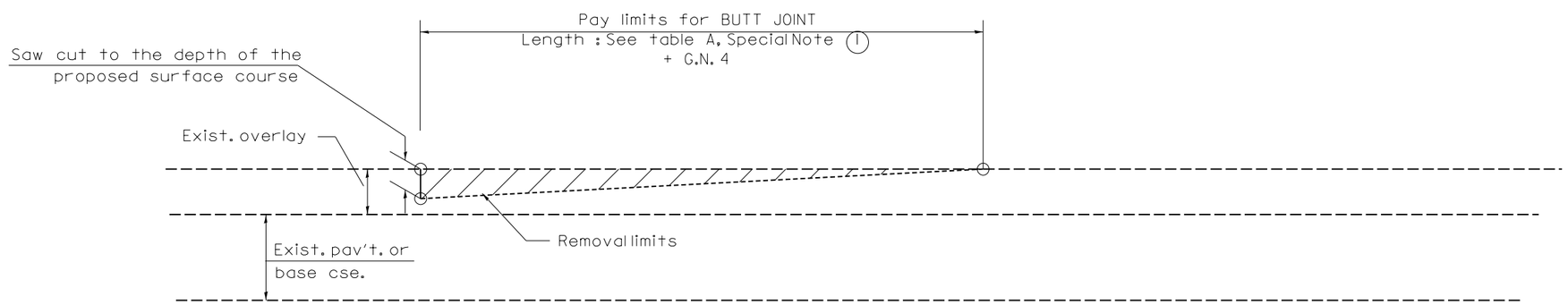

CASE 2 : NO HOT MIX ASPHALT SURFACE REMOVAL (COLD MILLING)

All dimensions are in inches (millimeters) unless otherwise noted.

Final	USER NAME = ander00846	DESIGNED - SD/JC	REVISED -	STATE OF ILLINOIS DEPARTMENT OF TRANSPORTATION	BUTT JOINTS DISTRICT 4 DETAIL NO. 406101
		DRAWN - RA/CL	REVISED -		
	PLOT SCALE = 0.16666667 ' / in.	CHECKED - MGD	REVISED -		SCALE: N/A SHEET OF SHEETS STA. TO STA.
	PLOT DATE = 3/26/2025	DATE - 10/25/2024 12:00:00 AM	REVISED -		

F.A.P. RTE.	SECTION	COUNTY	TOTAL SHEETS	SHEET NO.
693	20-00196-01-RS	TAZEWELL	136	106
	13L0177A	CONTRACT NO. 89859		
	ILLINOIS	FED. AID PROJECT		

DESIGNED	JFC	7/26/2023 12:00:00 AM
DRAWN	RLA	7/26/2023 12:00:00 AM
REVIEWED	MGD	10/25/2024 12:00:00 AM

MODEL: sht-IDOTStandard01
FILE NAME: k:\13jobs\13L0177A\CADRoadSheet\Plan-Set 3 (8th-10th)\sht-IDOTStandard01.dgn

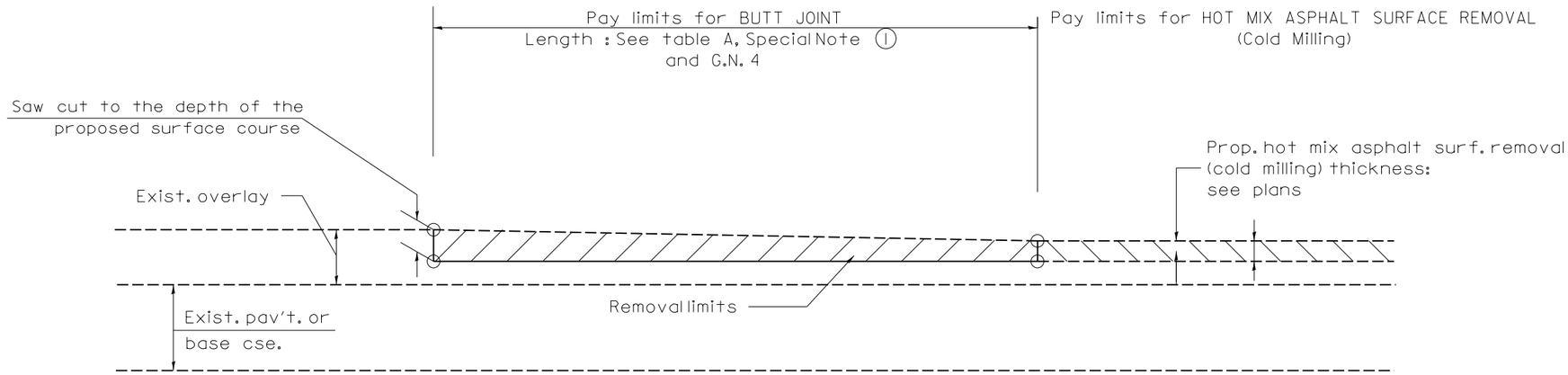

CASE 3 : HOT MIX ASPHALT SURFACE REMOVAL (COLD MILLING)
TIE-IN TO EXISTING BITUMINOUS TAPER

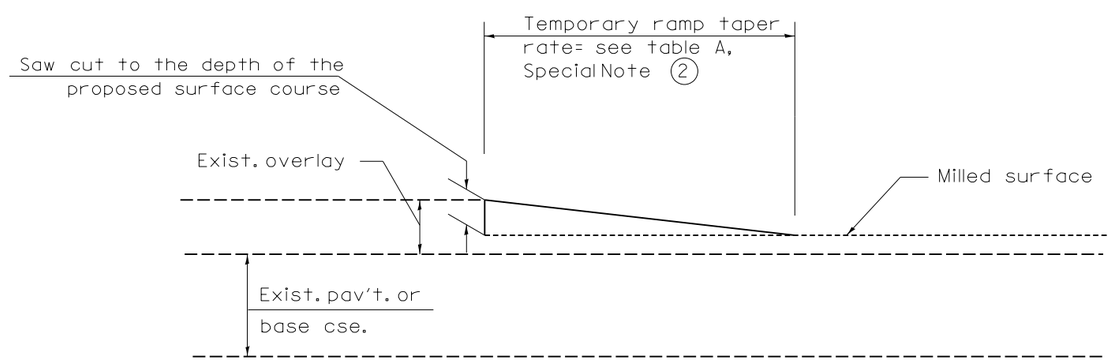

DETAIL TEMPORARY RAMP

All dimensions are in inches (millimeters) unless otherwise noted.

DESIGNED	JFC	7/26/2023 12:00:00 AM										
DRAWN	RLA	7/26/2023 12:00:00 AM										
REVIEWED	MGD	10/25/2024 12:00:00 AM										

MODEL: sht-IDOTStandard02
FILE NAME: E:\13Jobs\13L0177A\CAD\RoadSheet\Plan-Set 3 (8th-10th)\sht-IDOTStandard02.dgn

Final

USER NAME = ander00846	DESIGNED - SD/JC	REVISED -	
	DRAWN - RA/CL	REVISED -	
PLOT SCALE = 0.16666667 ' / in.	CHECKED - MGD	REVISED -	
PLOT DATE = 3/26/2025	DATE - 10/25/2024 12:00:00 AM	REVISED -	

STATE OF ILLINOIS
DEPARTMENT OF TRANSPORTATION

BUTT JOINTS
DISTRICT 4 DETAIL NO. 406101

SCALE: N/A | SHEET OF SHEETS | STA. TO STA.

F.A.P. RTE.	SECTION	COUNTY	TOTAL SHEETS	SHEET NO.
693	20-00196-01-RS	TAZEWELL	136	107
	13L0177A	CONTRACT NO. 89859		
		ILLINOIS	FED. AID PROJECT	

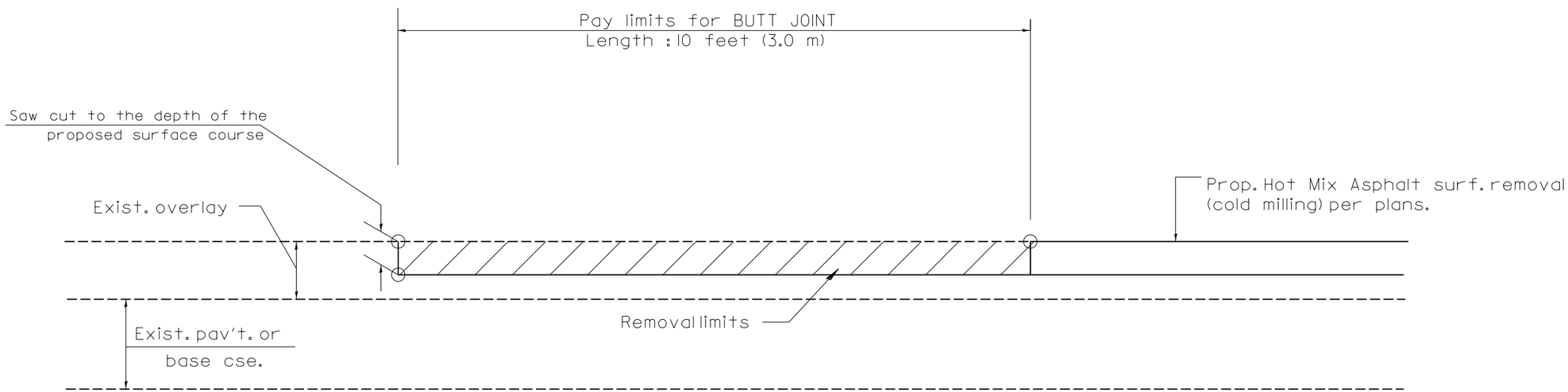

CASE 4 : SINGLE LIFT OVERLAY WITH EQUIVALENT DEPTH
HOT MIX ASPHALT SURFACE REMOVAL (COLD MILLING)
TIE-IN TO EXISTING BITUMINOUS TAPER

All dimensions are in inches (millimeters) unless otherwise noted.

DESIGNED	JFC	7/26/2023 12:00:00 AM	
DRAWN	RLA	7/26/2023 12:00:00 AM	
REVIEWED	MGD	10/25/2024 12:00:00 AM	

MODEL: sht-IDOTStandard03
FILE NAME: k:\13jobs\13L0177A\CAD\Road\Sheet\Plan-Set 3 (8th-10th)\sht-IDOTStandard03.dgn

Final

USER NAME = ander00846	DESIGNED - SD/JC	REVISED -	
	DRAWN - RA/CL	REVISED -	
PLOT SCALE = 0.16666667 ' / in.	CHECKED - MGD	REVISED -	
PLOT DATE = 3/26/2025	DATE - 10/25/2024 12:00:00 AM	REVISED -	

STATE OF ILLINOIS
DEPARTMENT OF TRANSPORTATION

BUTT JOINTS
DISTRICT 4 DETAIL NO. 406101

SCALE: N/A | SHEET OF SHEETS | STA. TO STA.

F.A.P. RTE.	SECTION	COUNTY	TOTAL SHEETS	SHEET NO.
693	20-00196-01-RS	TAZEWELL	136	108
	13L0177A	CONTRACT NO. 89859		
		ILLINOIS	FED. AID PROJECT	

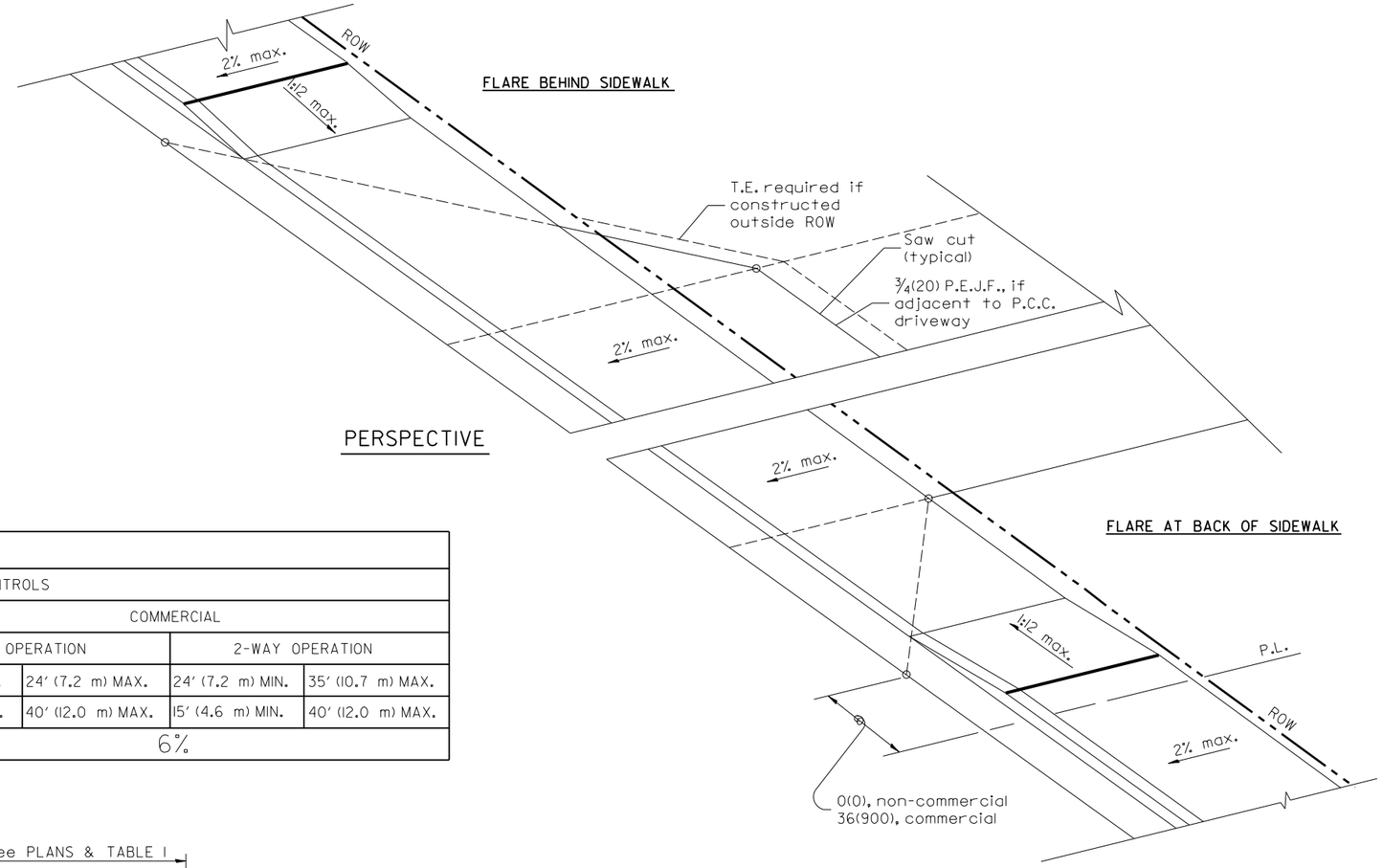

TABLE I						
URBAN ENTRANCE DESIGN CONTROLS						
ELEMENT	NON-COMMERCIAL		COMMERCIAL			
			1-WAY OPERATION		2-WAY OPERATION	
WIDTH (W)	12' (3.6 m) MIN.	24' (7.2 m) MAX.	14' (4.3 m) MIN.	24' (7.2 m) MAX.	24' (7.2 m) MIN.	35' (10.7 m) MAX.
RADIUS EQUIVALENT 1:1 FLARE (F)	5' (1.5 m) MIN.	25' (7.6 m) MAX.	15' (4.6 m) MIN.	40' (12.0 m) MAX.	15' (4.6 m) MIN.	40' (12.0 m) MAX.
MAX. GRADE (G)	8%		6%			

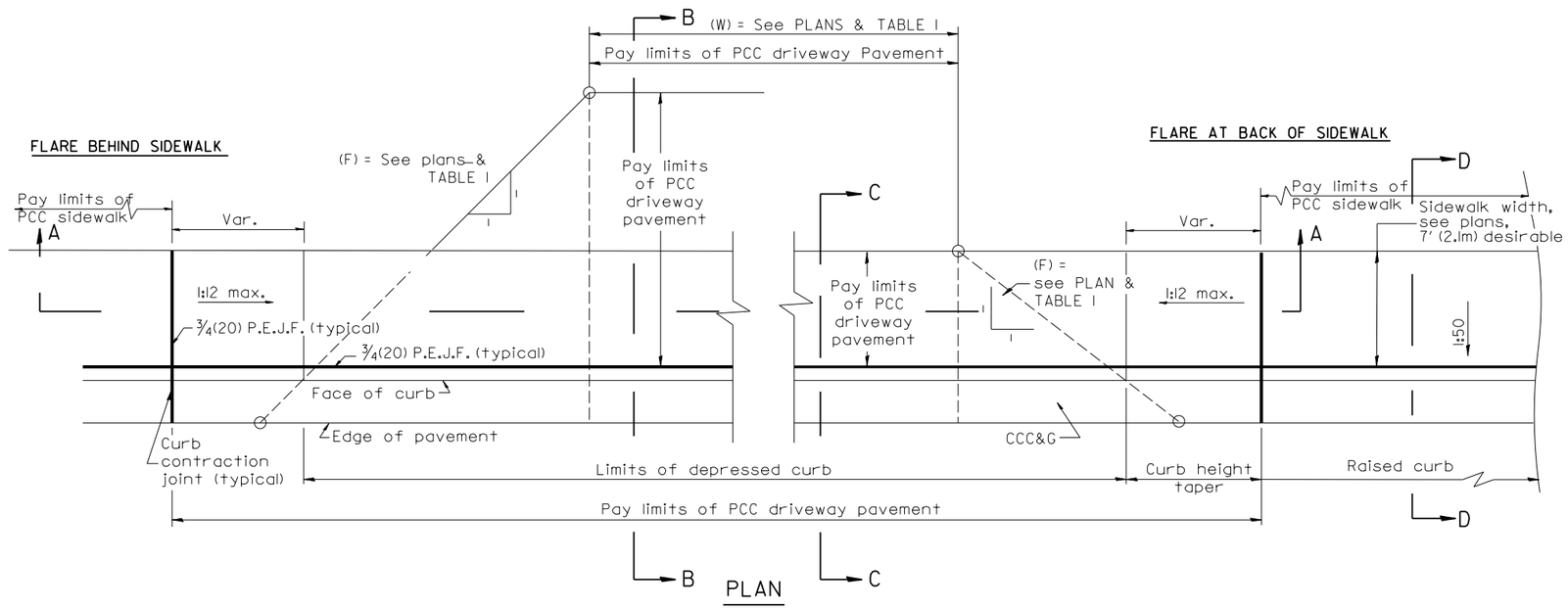

PLAN

GENERAL NOTES

1. The sidewalk area located within the pay limits of P.C.C. Driveway Pavement will be of the same thickness and construction as the P.C.C. Driveway Pavement.
2. Combination Concrete Curb & Gutter shall be depressed in accordance with Standard 606001.
3. Exceptions to the radius flare/property line relationship are as shown in the plans for common entrances, with jointly executed access permits.
4. Refer to State Standard 424026 for detectable warnings at busy commercial entrances.

All dimensions are in inches (millimeters) unless otherwise noted.

DESIGNER NOTES:
1. DESIGNER SHOULD REVIEW "HANDBOOK FOR THE POLICY ON PERMITS FOR ACCESS DRIVEWAYS TO STATE HIGHWAYS"
1:1 FLARES ARE RECOMMENDED FOR CURBLINE SIDEWALKS.
2. DESIGNER SHOULD REVIEW CHAPTER 58 OF BDE FOR THE ADA REQUIREMENTS.
3. INCLUDE STATE STANDARD 606001 AND APPLICABLE SIDEWALK STANDARDS.

DESIGNED	JFC	7/26/2023 12:00:00 AM
DRAWN	RLA	7/26/2023 12:00:00 AM
REVIEWED	MGD	10/25/2024 12:00:00 AM

MODEL: sht-IDOTStandard04
FILE NAME: h:\13jobs\13L0177A\CAD\Road\Sheet\Plan-Set 3 (8ft-10ft)\sht-IDOTstandard04.dgn

Final

USER NAME = ander00846	DESIGNED - SD/JC	REVISED -	
	DRAWN - RA/CL	REVISED -	
PLOT SCALE = 0.16666667 ' / in.	CHECKED - MGD	REVISED -	
PLOT DATE = 3/26/2025	DATE - 10/25/2024 12:00:00 AM	REVISED -	

STATE OF ILLINOIS
DEPARTMENT OF TRANSPORTATION

URBAN ENTRANCES, ACCESSIBLE TO THE DISABLED FOR CURBLINE SIDEWALK /DISTRICT 4 DETAIL NO. 423101

SCALE: N/A | SHEET OF SHEETS | STA. TO STA.

F.A.P. RTE.	SECTION	COUNTY	TOTAL SHEETS	SHEET NO.
693	20-00196-01-RS	TAZEWELL	136	109
	13L0177A	CONTRACT NO. 89859		
		ILLINOIS	FED. AID PROJECT	

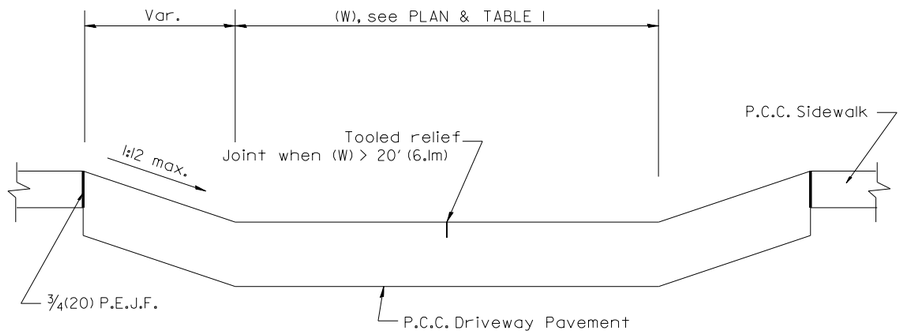

SECTION A-A

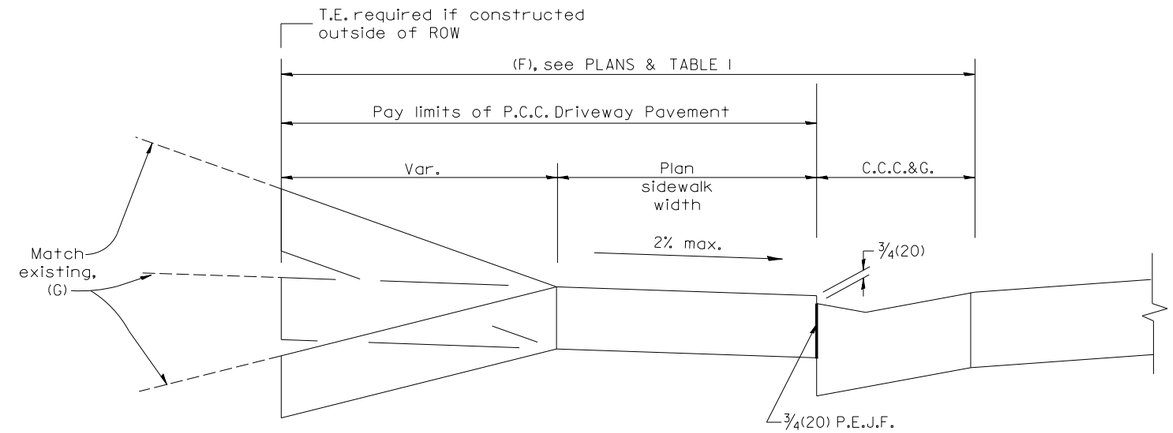

SECTION B-B

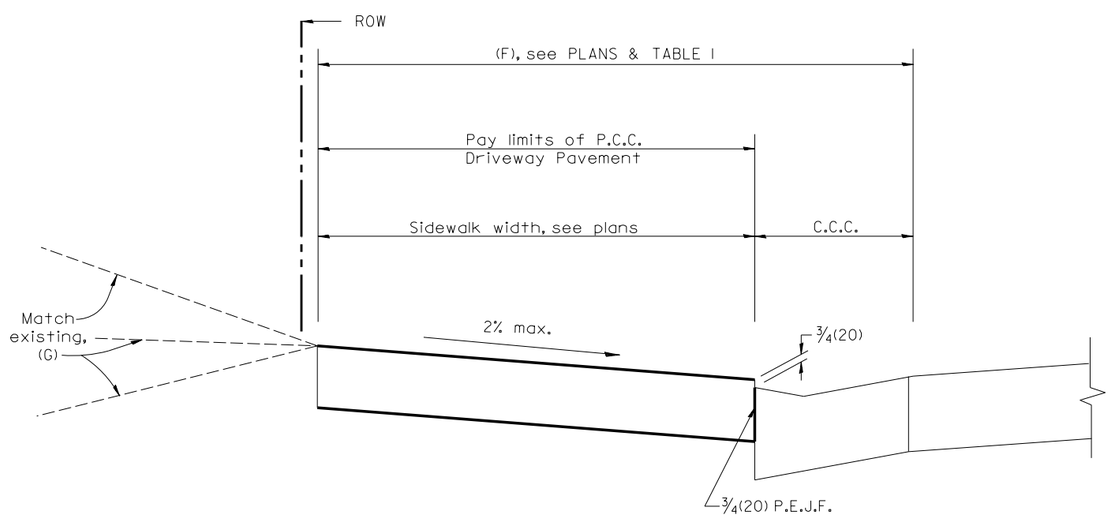

SECTION C-C

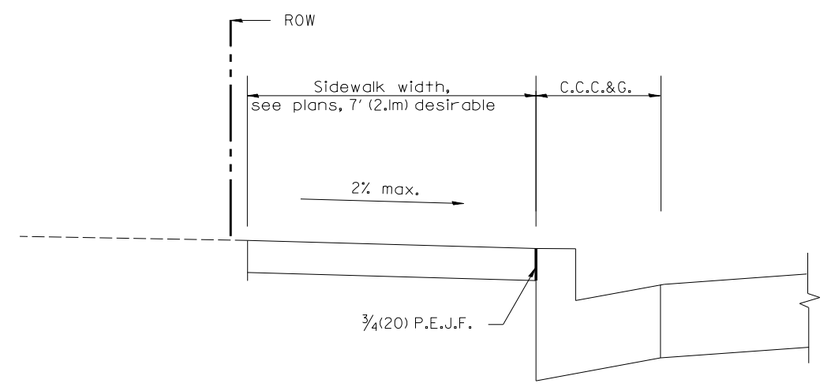

SECTION D-D

All dimensions are in inches (millimeters) unless otherwise noted.

DESIGNED	JFC	7/26/2023 12:00:00 AM			
DRAWN	RLA	7/26/2023 12:00:00 AM			
REVIEWED	MGD	10/25/2024 12:00:00 AM			

MODEL: sht-IDOTStandard05
FILE NAME: I:\13Jobs\13L0177A\CAD\RoadSheet\Plan-Set 3 (8th-10th)\sht-IDOTStandard05.dgn

Final

USER NAME = ander00846	DESIGNED - SD/JC	REVISED -	
	DRAWN - RA/CL	REVISED -	
PLOT SCALE = 0.16666667 ' / in.	CHECKED - MGD	REVISED -	
PLOT DATE = 3/26/2025	DATE - 10/25/2024 12:00:00 AM	REVISED -	

STATE OF ILLINOIS
DEPARTMENT OF TRANSPORTATION

URBAN ENTRANCES, ACCESSIBLE TO THE DISABLED
FOR CURBLINE SIDEWALK /DISTRICT 4 DETAIL NO. 423101

SCALE: N/A | SHEET OF SHEETS | STA. TO STA.

F.A.P. RTE.	SECTION	COUNTY	TOTAL SHEETS	SHEET NO.
693	20-00196-01-RS	TAZEWELL	136	110
	13L0177A	CONTRACT NO. 89859		
		ILLINOIS	FED. AID PROJECT	

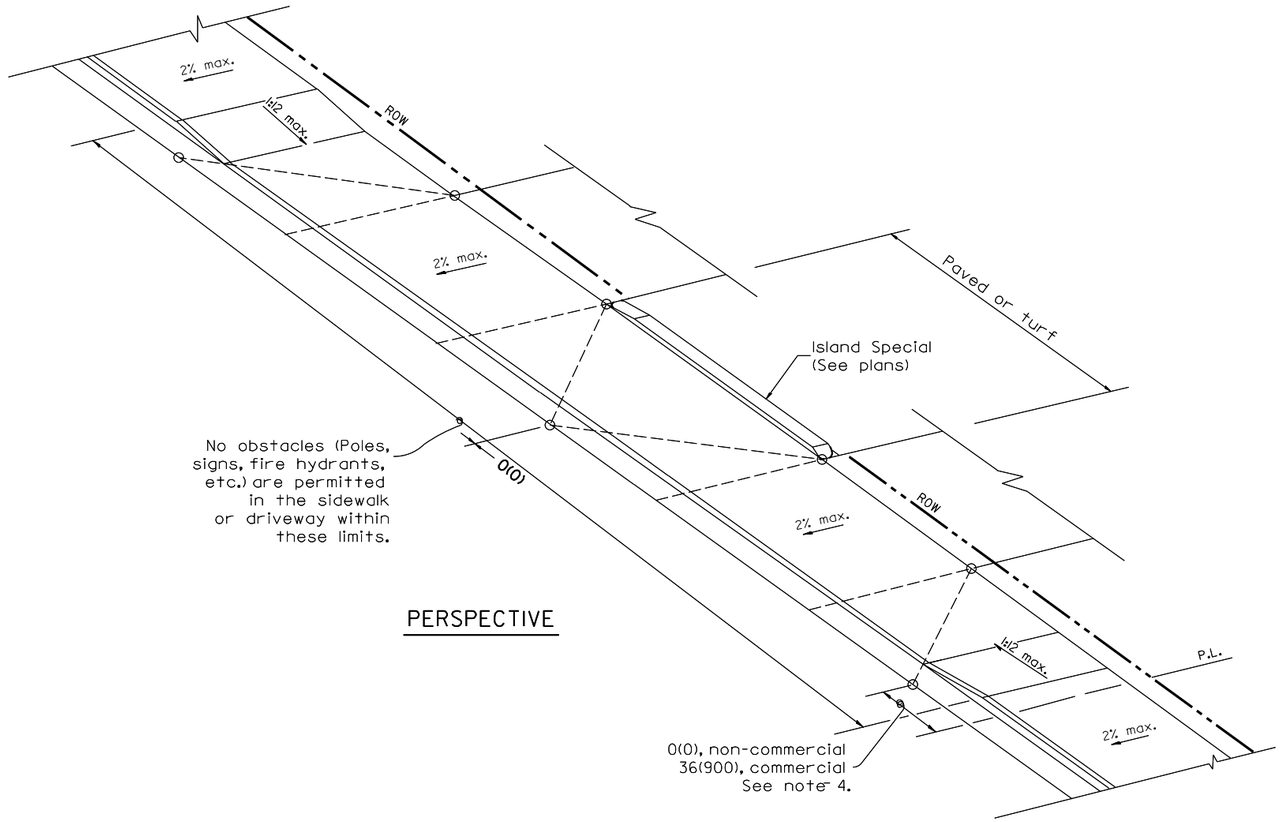

PERSPECTIVE

GENERAL NOTES

1. The sidewalk area located within the pay limits of P.C.C. Driveway Pavement will be of the same thickness and construction as the P.C.C. Driveway Pavement.
2. Combination Concrete Curb & Gutter shall be depressed in accordance with Standard 606001.
3. Exceptions to the radius flare/property line relationship are as shown in the plans for common entrances, with jointly executed access permits.
4. Refer to State Standard 424026 for detectable warnings at busy commercial entrances.

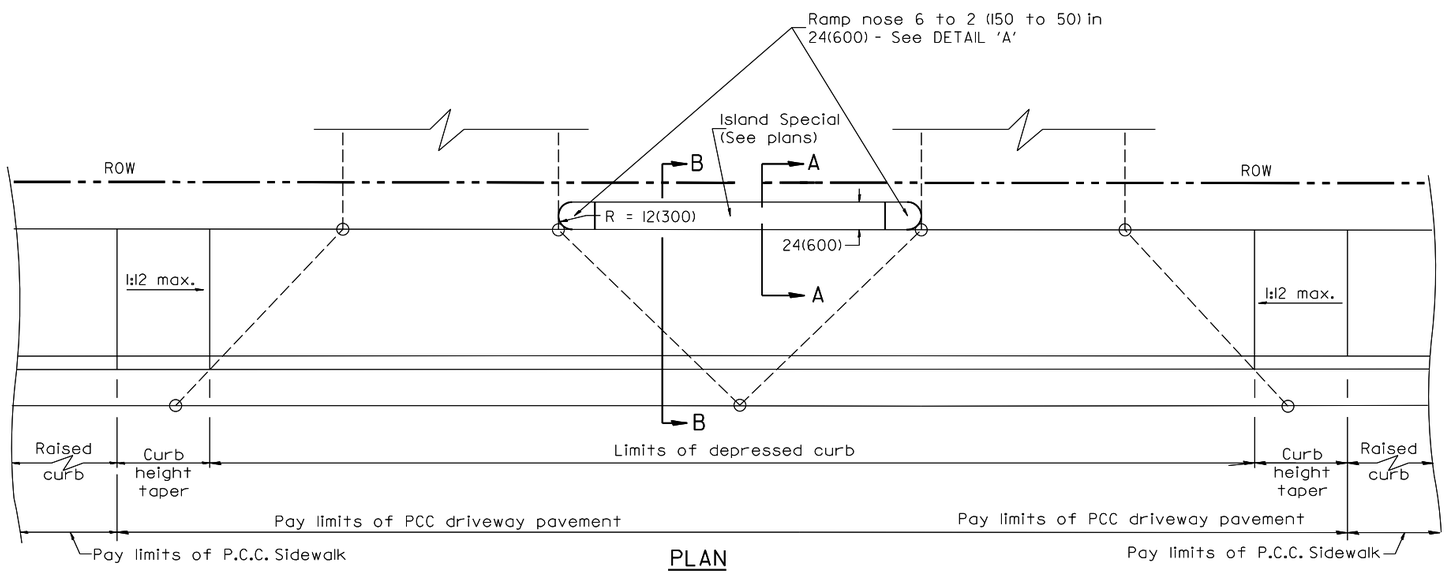

PLAN

All dimensions are in inches (millimeters) unless otherwise noted.

DESIGNER NOTES:
1. THIS DRAWING SHOULD BE USED IN CONJUNCTION WITH DISTRICT CADD STD. "URBAN ENTRANCES, ACCESSIBLE TO THE DISABLED, FOR CURBLINE SIDEWALKS."
2. THIS DRAWING IS FOR USE WHEN DISTANCE BETWEEN DRIVEWAY FLARES IS LESS THAN 6'(1.8m).
3. INCLUDE STATE STANDARD 606001 AND APPLICABLE SIDEWALK STANDARDS.

DESIGNED	JFC	7/26/2023 12:00:00 AM
DRAWN	RLA	7/26/2023 12:00:00 AM
REVIEWED	MGD	10/25/2024 12:00:00 AM

MODEL: sht-IDOTstandard06
FILE NAME: K:\13jobs\13L0177A\CADRoad\Sheet\Plan-Set 3 (8in-10in)\sht-IDOTstandard06.dgn

Final

USER NAME = ander00846	DESIGNED - SD/JC	REVISED -	
	DRAWN - RA/CL	REVISED -	
PLOT SCALE = 0.16666667 ' / in.	CHECKED - MGD	REVISED -	
PLOT DATE = 3/26/2025	DATE - 10/25/2024 12:00:00 AM	REVISED -	

STATE OF ILLINOIS
DEPARTMENT OF TRANSPORTATION

URBAN ENTRANCES, SPECIAL DESIGN FOR CLOSELY SPACED ENTRANCES /DISTRICT 4 DETAIL NO. 423121

SCALE: N/A | SHEET OF SHEETS | STA. TO STA.

F.A.P. RTE.	SECTION	COUNTY	TOTAL SHEETS	SHEET NO.
693	20-00196-01-RS	TAZEWELL	136	111
	13L0177A	CONTRACT NO. 89859		
	ILLINOIS	FED. AID PROJECT		

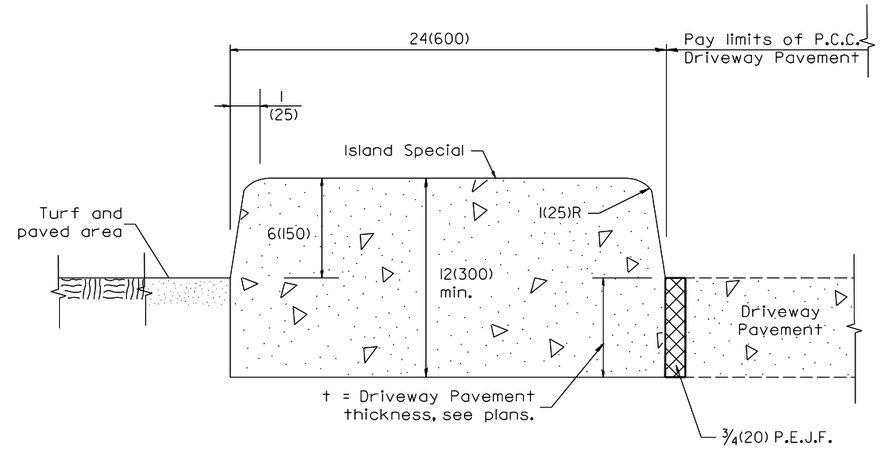

SECTION A-A

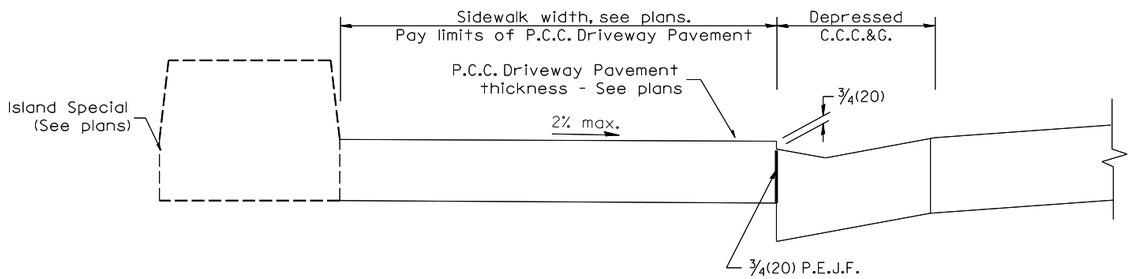

SECTION B-B

GENERAL NOTES

1. All provisions in Section 606 of the Standard Specifications shall apply unless otherwise shown.

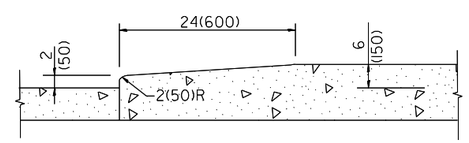

DETAIL 'A'
Nose ramping detail

ISLAND SPECIAL

All dimensions are in inches (millimeters) unless otherwise noted.

DESIGNED	JFC 7/26/2023 12:00:00 AM				
DRAWN	RLA 7/26/2023 12:00:00 AM				
REVIEWED	MGD 10/25/2024 12:00:00 AM				

MODEL: sht:IDOTstandard07
FILE NAME: K:\13jobs\13L0177A\CADRoad\Sheet\Plan-Set 3 (6th-10th)\sht-IDOTstandard07.dgn

Final

USER NAME = ander00846	DESIGNED - SD/JC	REVISED -			
	DRAWN - RA/CL	REVISED -			
PLOT SCALE = 0.16666667 ' / in.	CHECKED - MGD	REVISED -			
PLOT DATE = 3/26/2025	DATE - 10/25/2024 12:00:00 AM	REVISED -			

STATE OF ILLINOIS
DEPARTMENT OF TRANSPORTATION

URBAN ENTRANCES, SPECIAL DESIGN FOR CLOSELY SPACED ENTRANCES /DISTRICT 4 DETAIL NO. 423121

SCALE: N/A | SHEET OF SHEETS | STA. TO STA.

F.A.P. RTE.	SECTION	COUNTY	TOTAL SHEETS	SHEET NO.
693	20-00196-01-RS	TAZEWELL	136	112
	13L0177A	CONTRACT NO. 89859		
	ILLINOIS	FED. AID PROJECT		

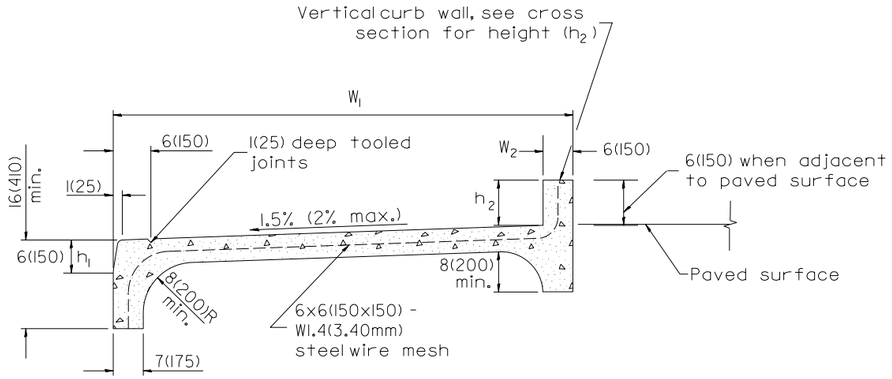

COMBINATION CONCRETE CURB-SIDEWALK 4"(100mm) (SPECIAL)

Measurement formula: $(W_1 + W_2 + h_1 + h_2) \times$ length constructed = Payment area in square feet (square meters)

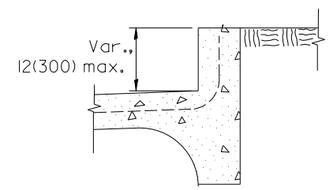

WITH TURF BORDER

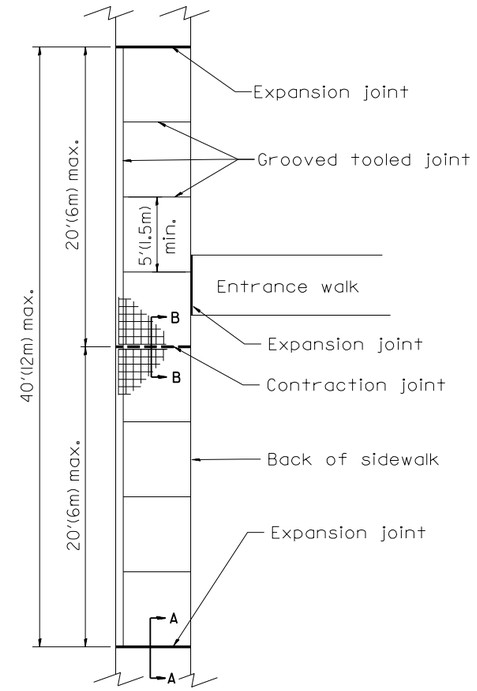

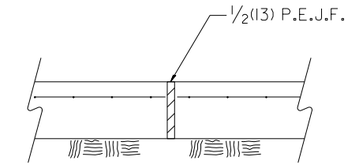

SEC. A-A
Expansion Joint

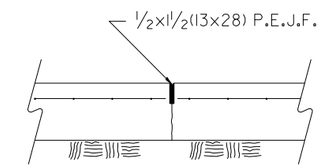

SEC. B-B
Contraction Joint

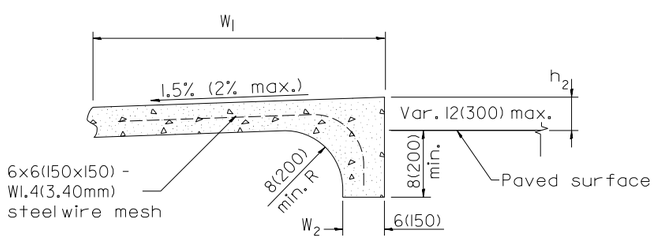

ALTERNATE BACK DETAIL

WHEN SIDEWALK GRADE ABOVE EXISTING GRADE

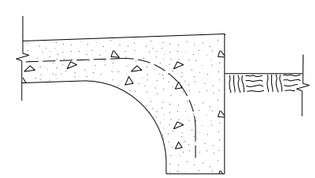

WITH TURF BORDER

DESIGNER NOTES:
1. THIS DRAWING SHOULD BE USED IN CONJUNCTION WITH STATE STANDARD 424001 AND DISTRICT CADD STDS. "CURB RAMPS ACCESSIBLE TO THE DISABLED" AND "COMBINATION CONCRETE CURB & SIDEWALK 4" (100mm).

GENERAL NOTES:
1. All provisions in Section 424 of the Standard Specifications shall apply, unless otherwise shown.

All dimensions are in inches (millimeters) unless otherwise noted.

DESIGNED	JC 7/26/2023 12:00:00 AM	
DRAWN	RLA 7/26/2023 12:00:00 AM	
REVIEWED	MGD 10/25/2024 12:00:00 AM	

MODEL: sht:IDOTStandard08
FILE NAME: k:\13jobs\13L0177A\CAD\Road\Sheet\Plan-Set 3 (8th-10th)\sht-IDOTStandard08.dgn

Final

USER NAME = ander00846	DESIGNED - SD/JC	REVISED -	
	DRAWN - RA/CL	REVISED -	
PLOT SCALE = 0.16666667 ' / in.	CHECKED - MGD	REVISED -	
PLOT DATE = 4/25/2025	DATE - 10/25/2024 12:00:00 AM	REVISED -	

STATE OF ILLINOIS
DEPARTMENT OF TRANSPORTATION

COMBINATION CONCRETE CURB-SIDEWALK 4" (SPECIAL)
DISTRICT 4 DETAIL NO. 424106

SCALE: N/A | SHEET OF SHEETS | STA. TO STA.

F.A.P. RTE.	SECTION	COUNTY	TOTAL SHEETS	SHEET NO.
693	20-00196-01-RS	TAZEWELL	136	113
	13L0177A	CONTRACT NO. 89859		
	ILLINOIS	FED. AID PROJECT		

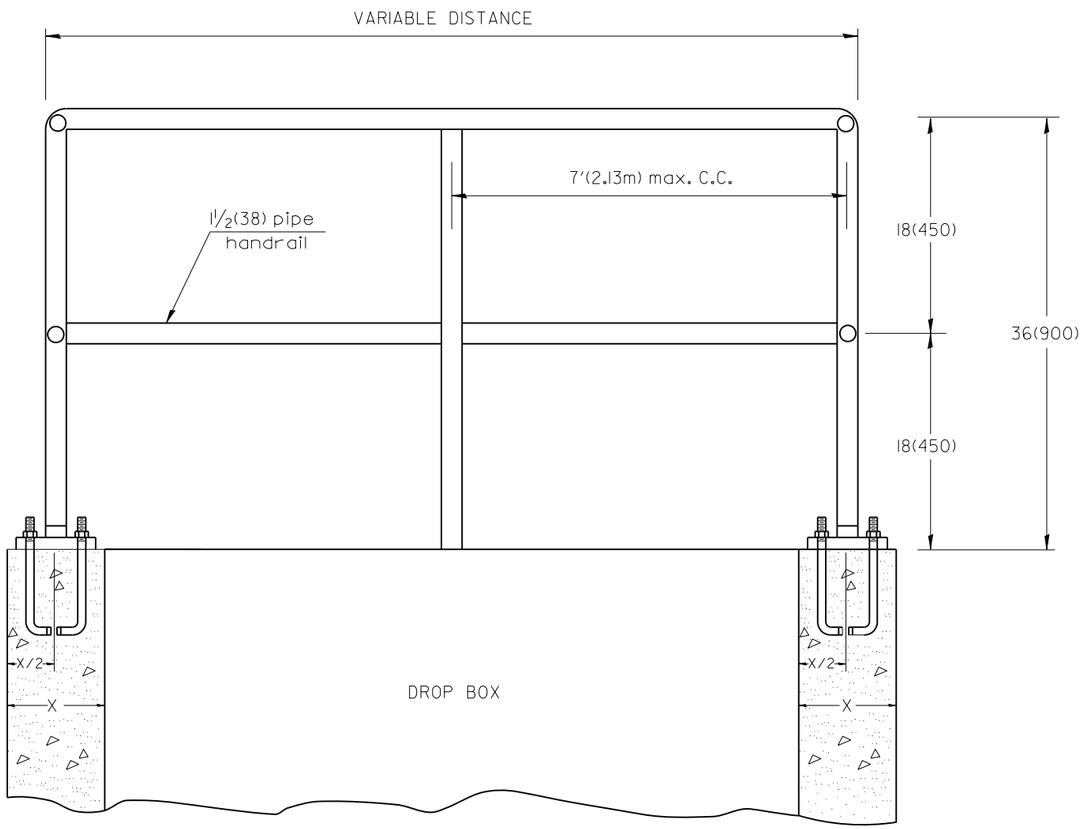

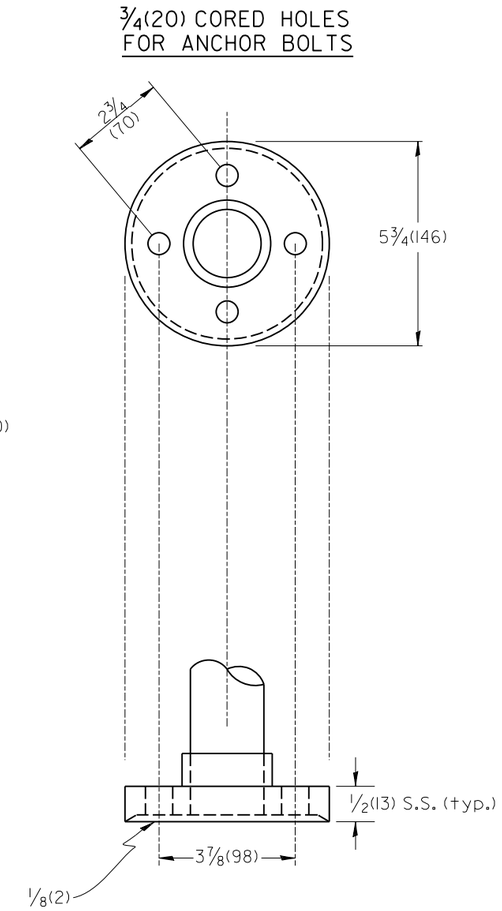

CAST IRON OR STRUCTURAL STEEL FITTING

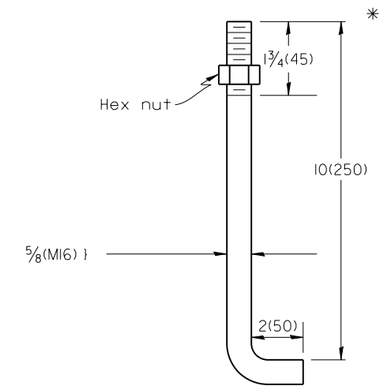

BUILT-IN ANCHOR BOLT
⅝(M16) ⌇, 12(300) LONG
(SEE GENERAL NOTE 3)

GENERAL NOTES:

1. Article 509.04 of the Standard Specifications shall apply.
2. Connection of railing to posts shall be made be continuous welding or with using standard pipe fitting.
3. An equivalent epoxy anchor stud can be used in place of anchor shown. Anchor bolt holes shall be ¾(20) in diameter and 5(125) deep. They shall be predrilled with an electric hammer drill to a depth of 4(100) prior to use of a pnuematic drill for the remaining 4(100). A two component encapsulated epoxy such as "Parabond" or an equivalent shall be used. Installation shall be according to Manufacturer's recommendations.
4. The pipe handrail shall be galvanized by the hot dip process.

All dimensions are in inches (millimeters) unless otherwise noted.

DESIGNED	JFC	7/26/2023 12:00:00 AM			
DRAWN	RLA	7/26/2023 12:00:00 AM			
REVIEWED	MGD	10/25/2024 12:00:00 AM			

MODE: sht-IDOTstandard07
FILE NAME: K:\13Jobs\13L0177A\CAD\RoadSheet\Plan-Set 3 (6th-10th)\sht-IDOTstandard16.dgn

Final

USER NAME = ander00846	DESIGNED - SD/JC	REVISED -	
	DRAWN - RA/CL	REVISED -	
PLOT SCALE = 0.16666667 ' / in.	CHECKED - MGD	REVISED -	
PLOT DATE = 3/26/2025	DATE - 10/25/2024 12:00:00 AM	REVISED -	

STATE OF ILLINOIS
DEPARTMENT OF TRANSPORTATION

PIPE HANDRAIL FASTENING
DISTRICT 4 DETAIL NO. 510001

SCALE: N/A | SHEET OF SHEETS | STA. TO STA.

F.A.P. RTE.	SECTION	COUNTY	TOTAL SHEETS	SHEET NO.
693	20-00196-01-RS	TAZEWELL	136	114
	13L0177A	CONTRACT NO. 89859		
	ILLINOIS	FED. AID PROJECT		

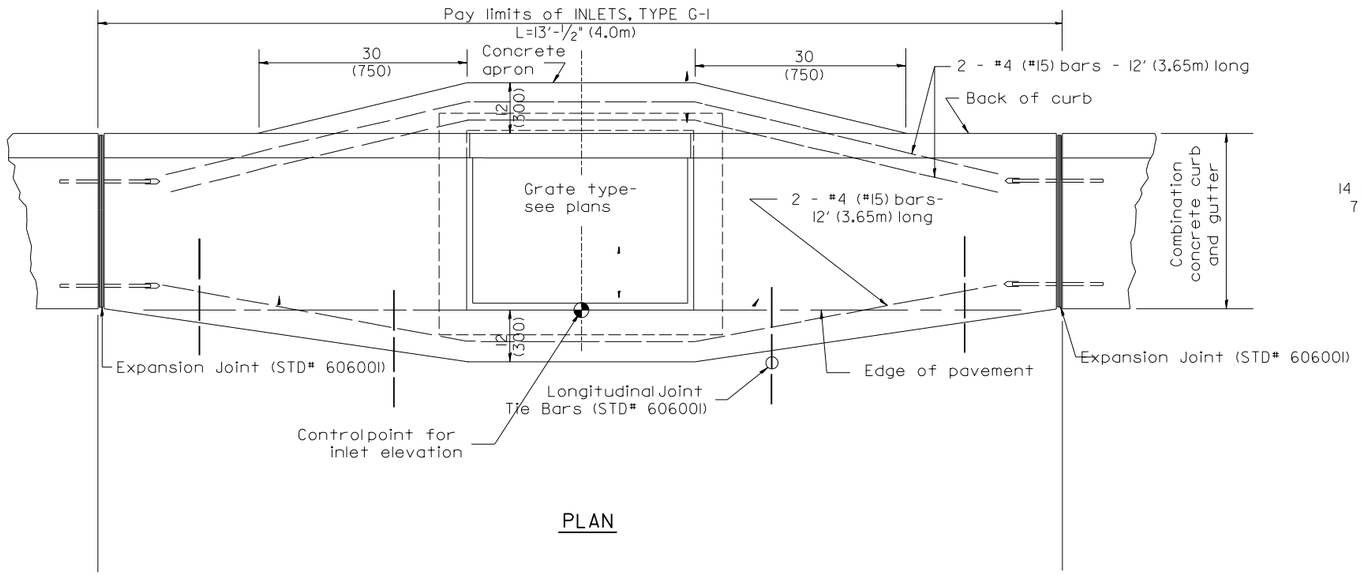

PLAN

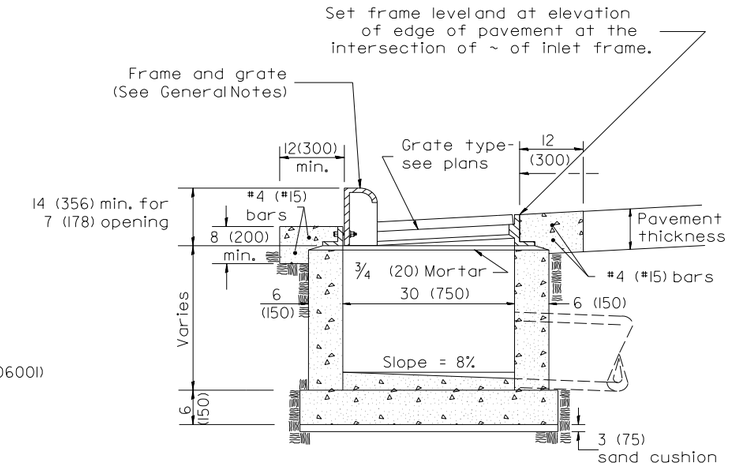

ELEVATION
SIDE

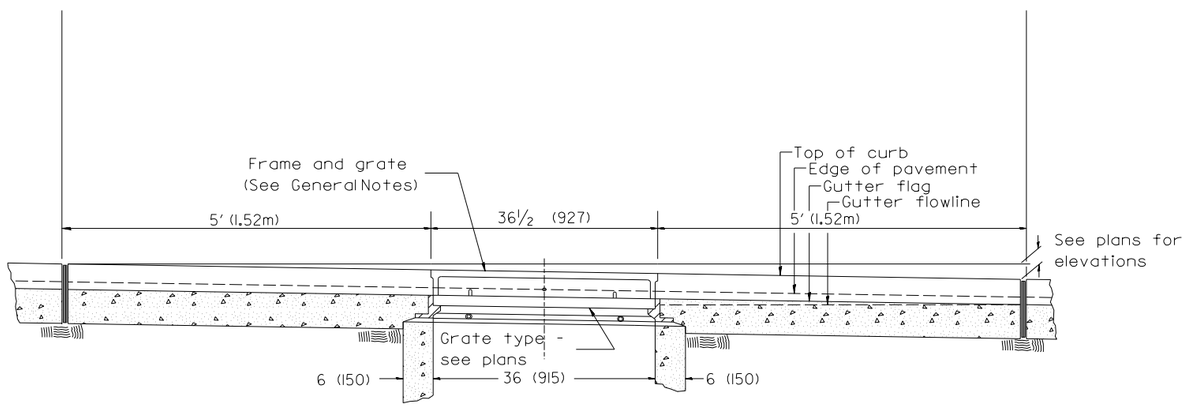

ELEVATION
FRONT

GENERAL NOTES

1. Inlet construction shall be in accordance with Section 602 of the Standard Specifications.
2. Combination Concrete Curb & Gutter shall be constructed in accordance with Section 606 of the Standard Specifications.
3. See District CADD Standard 604001-D4 for frame and grates.

DESIGNER NOTES:

1. Include State Standard 606001 for combination concrete curb and gutter details.
2. Include State Standard 420001 for pavement joints.
3. Include District CADD Standard for frame and grates and specify grate type in plans.
4. Include District Special Provision. Pay item includes transitional c.c.c &g., inlet and frame and grate. All work within pay limits.
5. The designer should include pavement removal quantities when the apron requires pavement removal.

All dimensions are in inches (millimeters) unless otherwise noted.

DESIGNED	JFC	7/26/2023 12:00:00 AM
DRAWN	RLA	7/26/2023 12:00:00 AM
REVIEWED	MGD	10/25/2024 12:00:00 AM

MODEL: sht-IDOTStandard05
FILE NAME: k:\13jobs\13L0177A\CAD\Road\Sheet\Plan-Set 3 (8in-10in)\sht-IDOTStandard09.dgn

Final

USER NAME = ander00846	DESIGNED - SD/JC	REVISED -	
	DRAWN - RA/CL	REVISED -	
PLOT SCALE = 0.16666667 ' / in.	CHECKED - MGD	REVISED -	
PLOT DATE = 3/26/2025	DATE - 10/25/2024 12:00:00 AM	REVISED -	

STATE OF ILLINOIS
DEPARTMENT OF TRANSPORTATION

INLETS, TYPE G-1
DISTRICT 4 DETAIL NO. 602001

SCALE: N/A | SHEET OF SHEETS | STA. TO STA.

F.A.P. RTE.	SECTION	COUNTY	TOTAL SHEETS	SHEET NO.
693	20-00196-01-RS	TAZEWELL	136	115
	13L0177A	CONTRACT NO. 89859		
	ILLINOIS	FED. AID PROJECT		

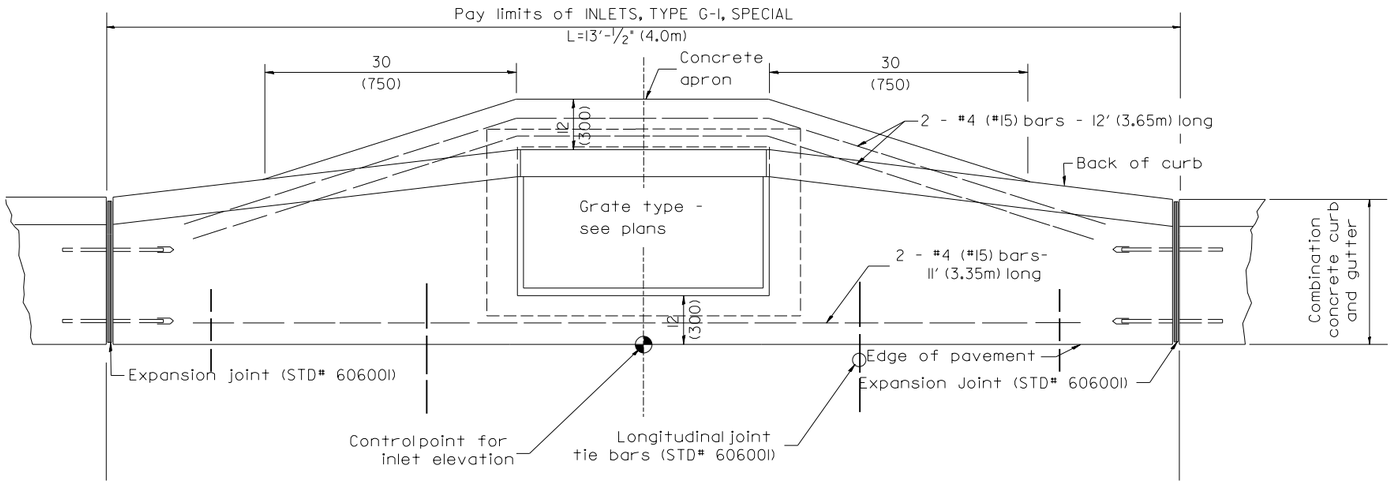

PLAN

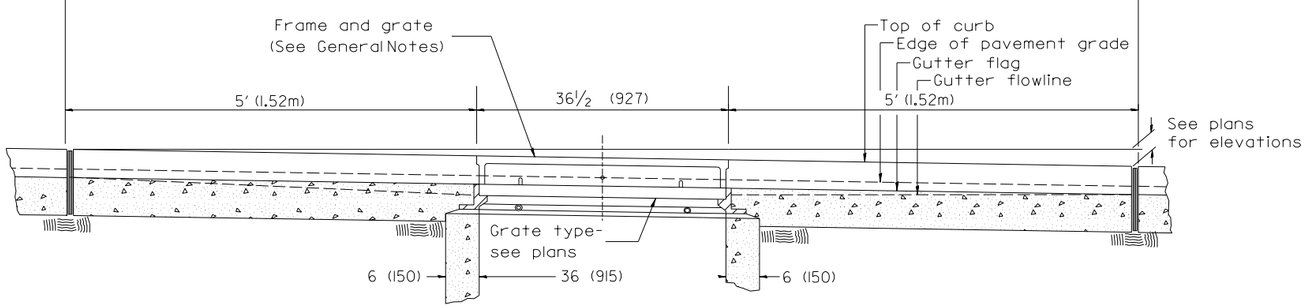

ELEVATION
(FRONT)

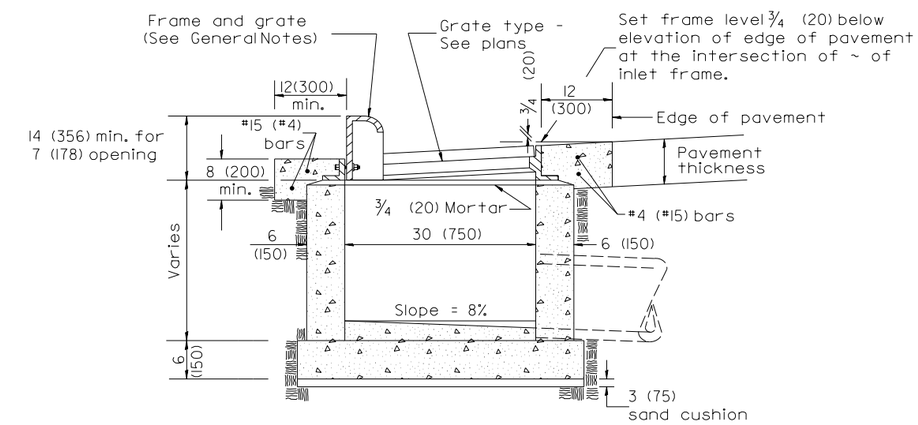

ELEVATION
(SIDE)

GENERAL NOTES

1. Inlet construction shall be in accordance with Section 602 of the Standard Specifications.
2. Combination Concrete Curb and Gutter shall be constructed in accordance with Section 606 of the Standard Specifications.
3. See District CADD Standard 604001-D4 for frame and grates.

All dimensions are in inches (millimeters) unless otherwise noted.

DESIGNER NOTES:
1. Include State Standard 606001 for combination concrete curb and gutter details.
2. Include State Standard 420001 for pavement joint joints.
3. Include District CADD Standard for frame and grates.
4. Include District Special Provision. Pay item includes transitional c.c.c &g., inlet and frame and grate. All work within pay limits.
5. Specify grate type in plans

DESIGNED	JFC	7/26/2023 12:00:00 AM
DRAWN	RLA	7/26/2023 12:00:00 AM
REVIEWED	MGD	10/25/2024 12:00:00 AM

MODEL: sht-IDOTStandard05
FILE NAME: k:\Jobs\13L0177A\CAD\Road\Sheet\Plan-Set 3 (8th-10th)\sht-IDOTstandard09A.dgn

Final

USER NAME = ander00846	DESIGNED - SD/JC	REVISED -	
	DRAWN - RA/CL	REVISED -	
PLOT SCALE = 0.16666667 ' / in.	CHECKED - MGD	REVISED -	
PLOT DATE = 3/26/2025	DATE - 10/25/2024 12:00:00 AM	REVISED -	

STATE OF ILLINOIS
DEPARTMENT OF TRANSPORTATION

INLETS, TYPE G-1, SPECIAL
DISTRICT 4 DETAIL NO. 602006

SCALE: N/A | SHEET OF SHEETS | STA. TO STA.

F.A.P. RTE.	SECTION	COUNTY	TOTAL SHEETS	SHEET NO.
693	20-00196-01-RS	TAZEWELL	136	116
	13L0177A	CONTRACT NO. 89859		
		ILLINOIS	FED. AID PROJECT	

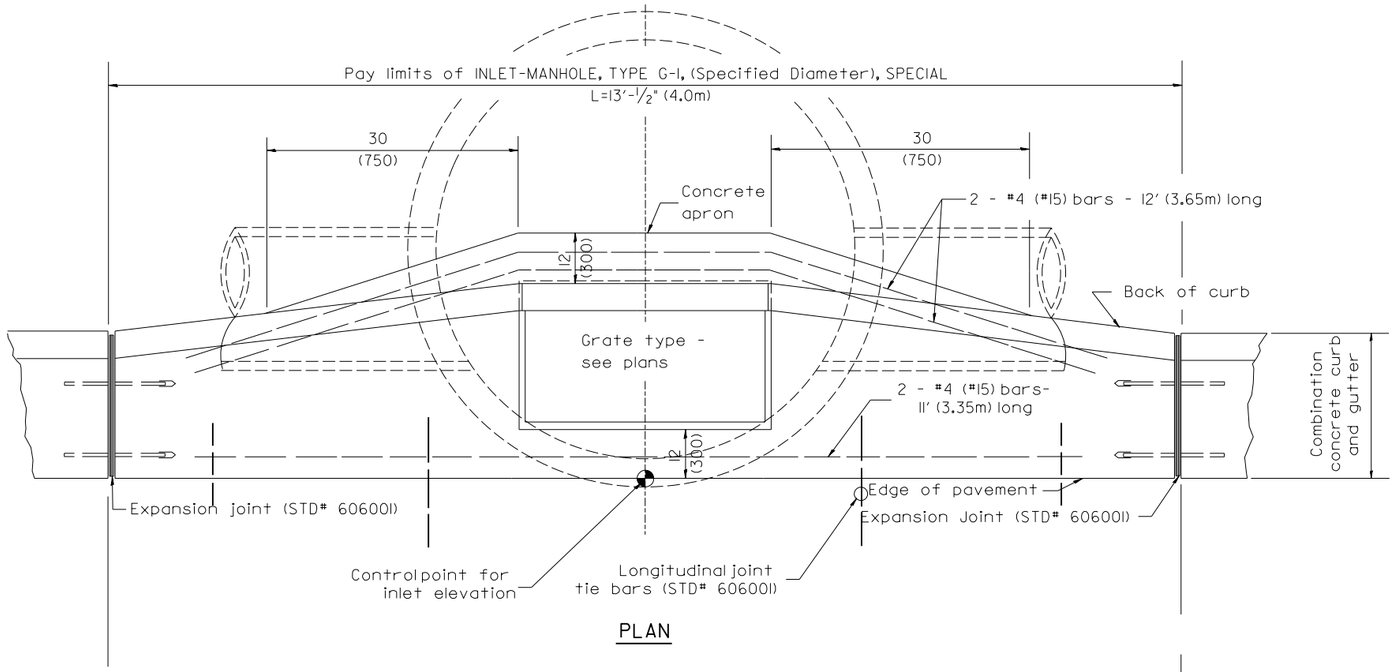

PLAN

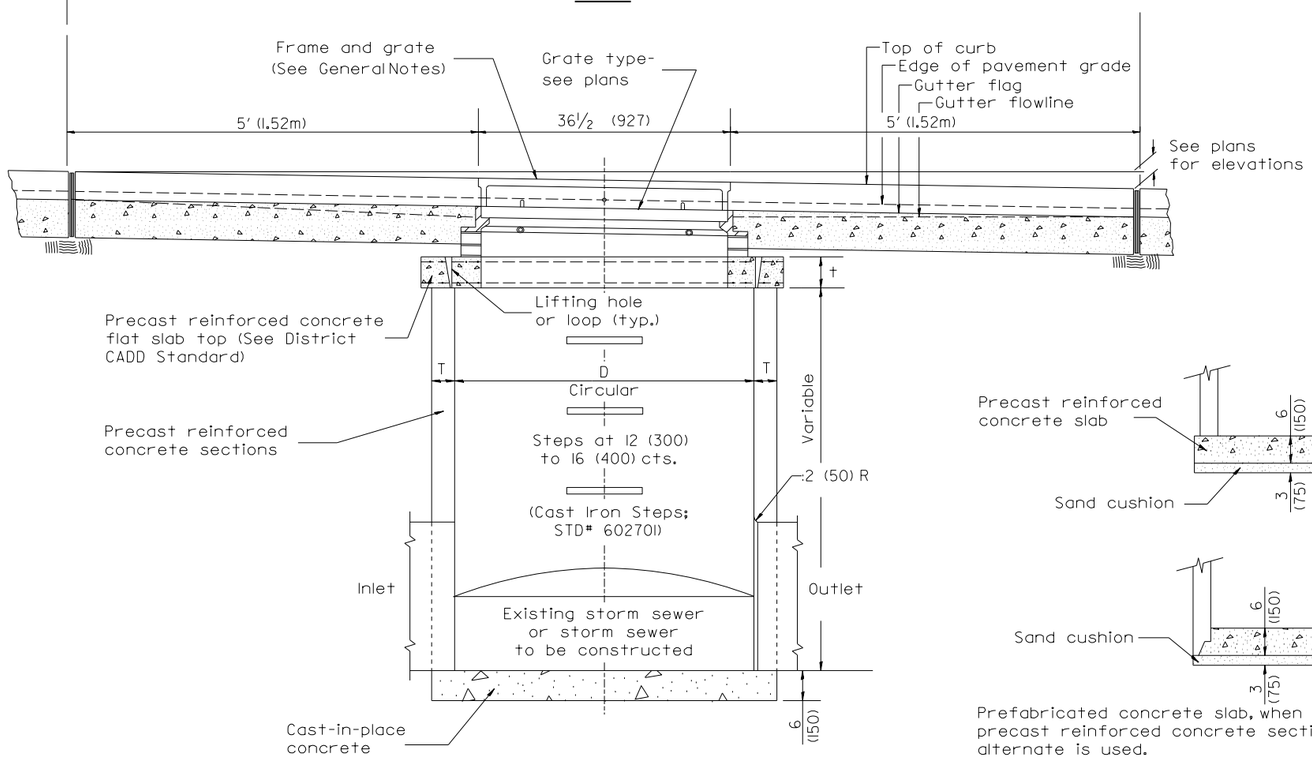

ELEVATION
(FRONT)

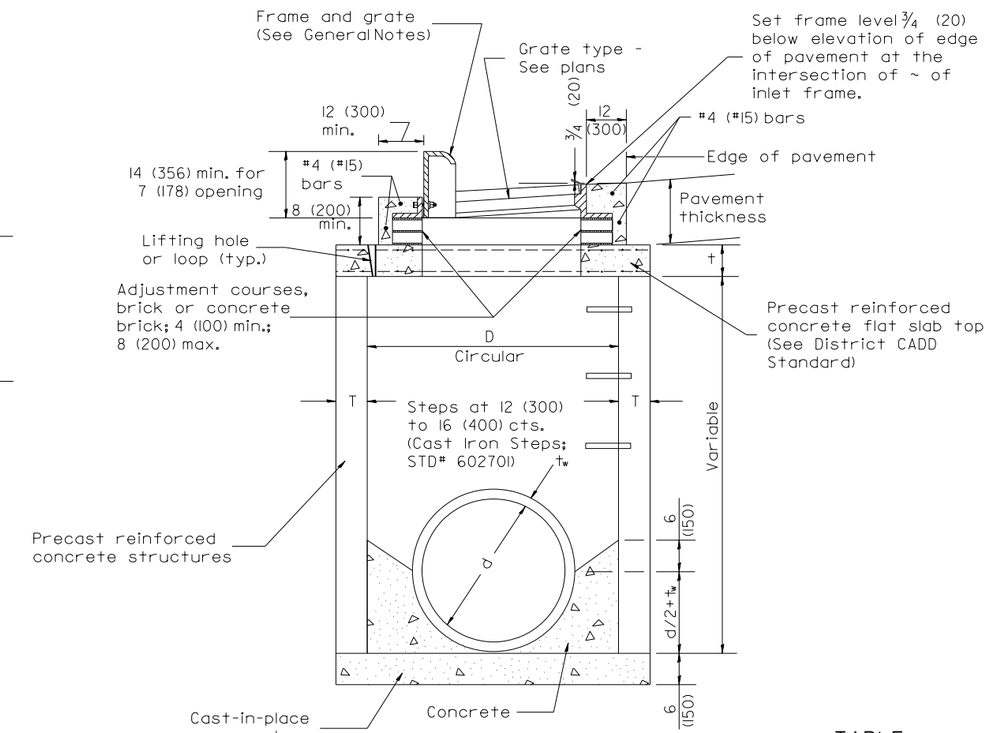

ELEVATION
(SIDE)

TABLE

D	T	t
4' (1.2m)	5 (125)	6 (150)
5' (1.5m)	6 (150)	8 (200)
6' (1.8m)	7 3/4 (195)	8 (200)
8' (2.4m)	9 (225)	10 (250)

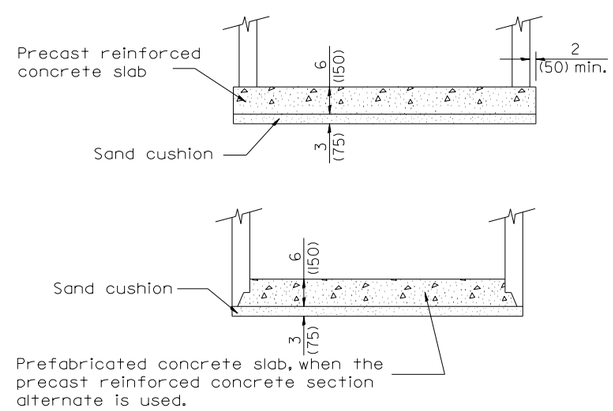

ALTERNATE BOTTOM SLAB

GENERAL NOTES

1. Inlet-manhole construction shall be in accordance with Section 602 of the Standard Specifications.
2. Combination concrete curb and gutter shall be constructed in accordance with Section 606 of the Standard Specifications.
3. See District CADD Standard 604001-D4 for frame and grates.
4. See District CADD Standard for precast reinforced concrete flat slab top.

All dimensions are in inches (millimeters) unless otherwise noted.

DESIGNER NOTES:
1. Include State STD# 606001 for combination concrete curb and gutter details.
2. Include State STD# 420001 for pavement joints.
3. Include State STD# 602701 for cast iron steps.
4. Include District CADD Standard for frame and grates.
5. Include District CADD Standard for precast reinforced concrete flat slab top.
6. Include District Special Provision. Pay item includes inlet - manhole, flat slab top, transitional c.c.&g. and frame and grate. All work within pay limits.
7. Specify diameter of inlet - manhole in plans.
8. Specify grate type in plans.

DESIGNED	JFC	7/26/2023 12:00:00 AM
DRAWN	RLA	7/26/2023 12:00:00 AM
REVIEWED	MGD	10/25/2024 12:00:00 AM

MODEL: sht-IDOTStandard10
FILE NAME: k:\13jobs\13L0177A\CAD\Road\Sheet\Plan-Set 3 (8th-10th)\sht-IDOTStandard10.dgn

Final

USER NAME = ander00846	DESIGNED - SD/JC	REVISED -	
	DRAWN - RA/CL	REVISED -	
PLOT SCALE = 0.16666667 ' / in.	CHECKED - MGD	REVISED -	
PLOT DATE = 4/25/2025	DATE - 10/25/2024 12:00:00 AM	REVISED -	

STATE OF ILLINOIS
DEPARTMENT OF TRANSPORTATION

INLET–MANHOLE, TYPE G–1, SPECIAL
DISTRICT 4 DETAIL NO. 602026

SCALE: N/A | SHEET OF SHEETS | STA. TO STA.

F.A.P. RTE.	SECTION	COUNTY	TOTAL SHEETS	SHEET NO.
693	20-00196-01-RS	TAZEWELL	136	117
	13L0177A	CONTRACT NO. 89859		
		ILLINOIS	FED. AID PROJECT	

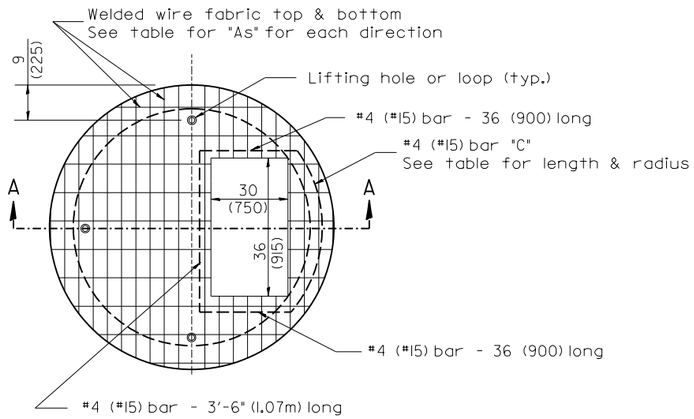

PLAN

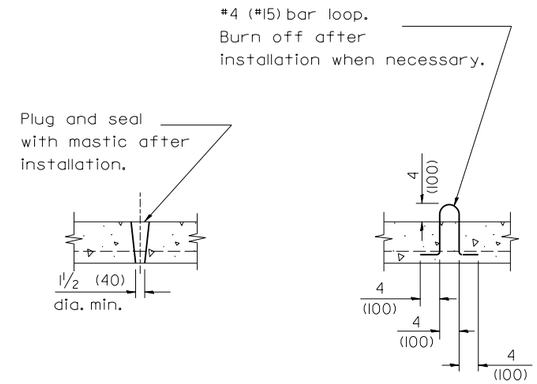

LIFTING HOLE OR LIFTING LOOP
TYPICAL

(3 required per slab)

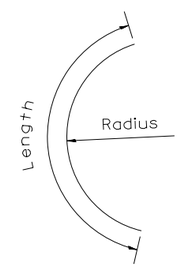

BAR "C"

TABLE

D	T	D_o (min.)	t	Reinforcement "A s" W.W.F. each direction	Bar size	No. 15 (No. 4) Bar C Length	Radius
4' (1.2m)	5 (125)	4'-10" (1.5m)	6 (150)	0.70 sq. inch/lin. ft. (1480mm ²/m)	No. 15 (No. 5)	1.35m (4'-6")	660 (26)
5' (1.5m)	6 (150)	6'-0" (1.8m)	8 (200)	0.70 sq. inch/lin. ft. (1480mm ²/m)	No. 15 (No. 5)	1.5m (5'-0")	810 (32)
6' (1.8m)	7 3/4 (195)	7'-3 1/2" (2.2m)	8 (200)	0.88 sq. inch/lin. ft. (1860mm ²/m)	No. 20 (No. 6)	1.8m (6'-0")	965 (38)
8' (2.4m)	9 (225)	9'-6" (2.9m)	10 (250)	0.88 sq. inch/lin. ft. (1860mm ²/m)	No. 20 (No. 6)	2.3m (7'-6")	1.27m (4'-2")

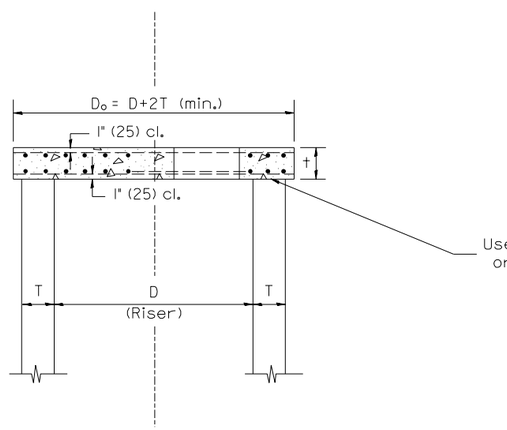

SECTION A-A

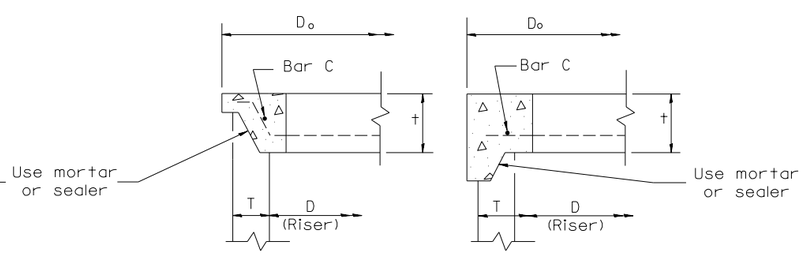

ALTERNATE JOINT CONFIGURATIONS

GENERAL NOTES

1. The precast reinforced concrete flat slab top shall be used with INLET-MANHOLE, TYPE G-1 and INLET-MANHOLE, TYPE G-1, SPECIAL.
2. Joint configuration and dimensions of flat slab top shall match and fit the riser joint detail.
3. Lifting devices shall be approved by the Engineer.

All dimensions are in inches (millimeters) unless otherwise noted.

DESIGNER NOTES:

1. Include this standard with Type G-1 and Type G-1, Special Inlet-Manholes.
2. The flat slab top is included in the cost of INLET-MANHOLES as per District Special Provision.

DESIGNED	JFC	7/26/2023 12:00:00 AM
DRAWN	RLA	7/26/2023 12:00:00 AM
REVIEWED	MGD	10/25/2024 12:00:00 AM

MODEL: sht-IDOTStandard11
FILE NAME: K:\13Jobs\13L0177A\CAD\RoadSheets\Plan-Set 3 (8th-10th)\sht-IDOTStandard11.dgn

Final

USER NAME = ander00846	DESIGNED - SD/JC	REVISED -	
	DRAWN - RA/CL	REVISED -	
PLOT SCALE = 0.16666667 ' / in.	CHECKED - MGD	REVISED -	
PLOT DATE = 4/25/2025	DATE - 10/25/2024 12:00:00 AM	REVISED -	

STATE OF ILLINOIS
DEPARTMENT OF TRANSPORTATION

PRECAST REINFORCED CONCRETE FLAT SLAB TOP FOR INLET-MANHOLE
TYPE G-1 AND G-1, SPECIAL / DISTRICT 4 DETAIL NO. 602101

SCALE: N/A | SHEET OF SHEETS | STA. TO STA.

F.A.P. RTE.	SECTION	COUNTY	TOTAL SHEETS	SHEET NO.
693	20-00196-01-RS	TAZEWELL	136	118
	13L0177A	CONTRACT NO. 89859		
		ILLINOIS	FED. AID PROJECT	

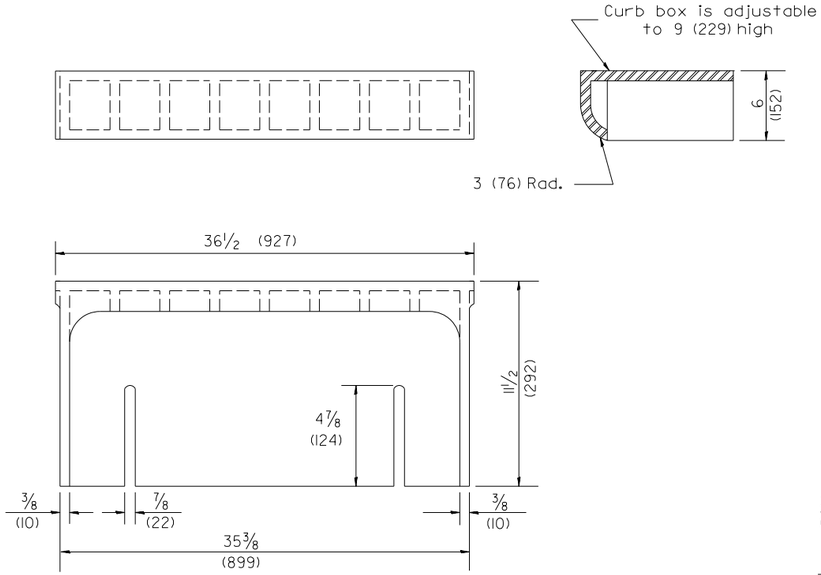

CAST CURB BOX
110 lbs. (50 kg)

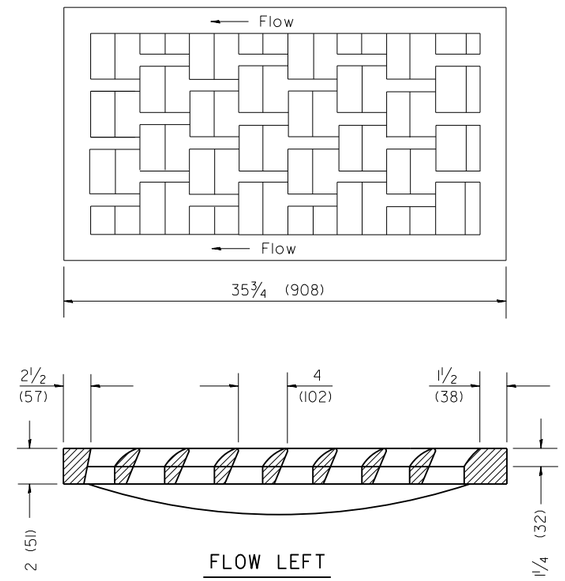

FLOW LEFT

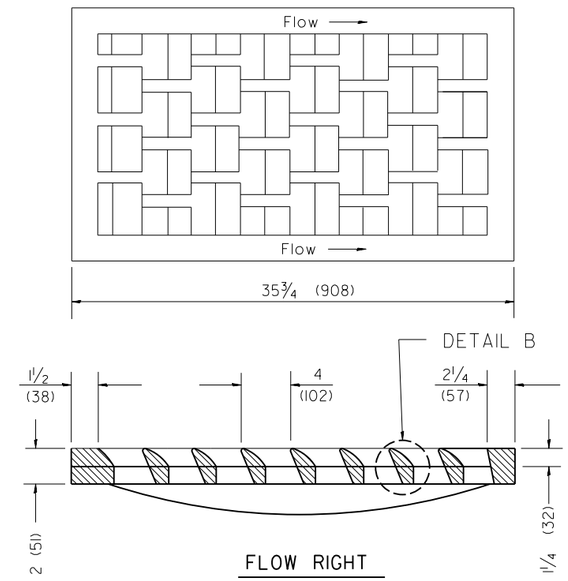

FLOW RIGHT

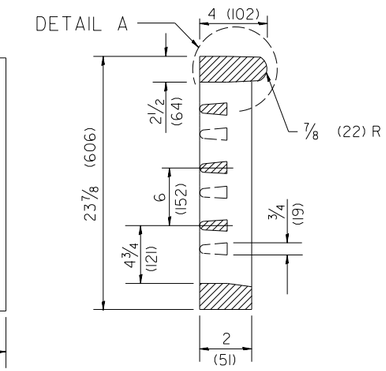

CAST VANE GRATES
(SPECIFY LEFT OR RIGHT FLOW)
230 lbs. (104 KG)

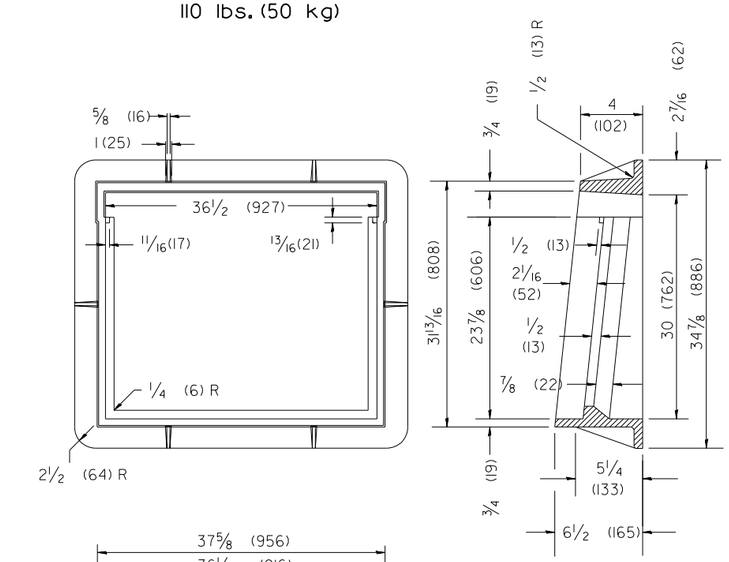

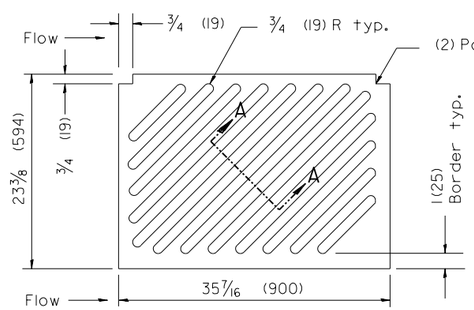

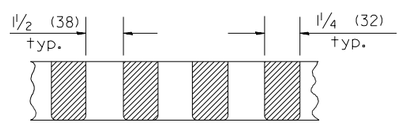

SECTION A-A

DETAIL A

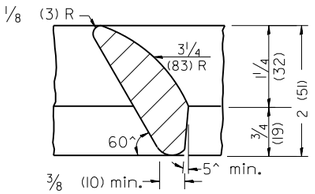

DETAIL B

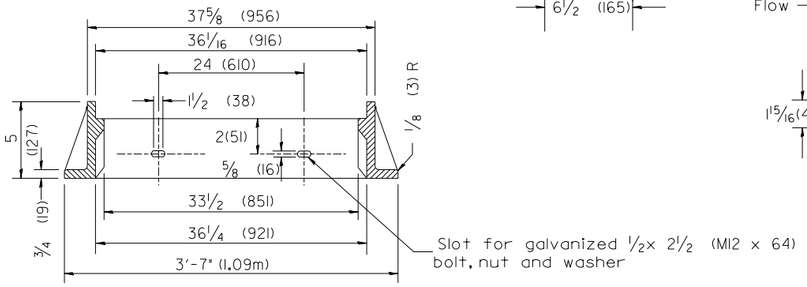

CAST FRAME
271 lbs. (123 kg)

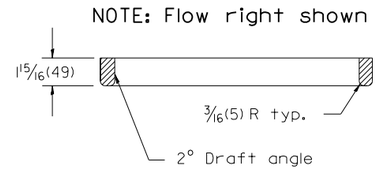

NOTE: Flow right shown

CAST DIAGONAL GRATE
(Reversible for flow)
217 lbs. (98 kg)

GENERAL NOTES

1. The frame and grate shown on this drawing are for use with all TYPE G-1 and TYPE G-1, SPECIAL DRAINAGE STRUCTURES. See plans for grate type and flow direction.
2. Flow direction: As viewed from street side.
3. Material: cast gray iron.

All dimensions are in inches (millimeters) unless otherwise noted.

1. Include this standard with all Type G-1 and Type G-1, Special Drainage Structures.
2. Specify grate types and flow directions in plans.
3. These castings are included in the cost of the drainage structures as per District Special Provision.
4. This drawing based upon "NEENAH" designs as follows: Inlet Frame: R-3246-A , Curb Box: R-3290
Reversable Diagonal Grate: R-3246-A
Vane Grates: R-3246-AL(flow left)
R-3246-AL(flow right)

DESIGNED	JFC	7/26/2023 12:00:00 AM
DRAWN	RLA	7/26/2023 12:00:00 AM
REVIEWED	MGD	10/25/2024 12:00:00 AM

MODEL: sht:IDOTstandard12
FILE NAME: K:\13jobs\13L0177A\CADRoad\Sheet\Plan-Set 3 (8th-10th)\sht-IDOTstandard12.dgn

Final

USER NAME = ander00846	DESIGNED - SD/JC	REVISED -	
	DRAWN - RA/CL	REVISED -	
PLOT SCALE = 0.16666667 ' / in.	CHECKED - MGD	REVISED -	
PLOT DATE = 3/26/2025	DATE - 10/25/2024 12:00:00 AM	REVISED -	

STATE OF ILLINOIS
DEPARTMENT OF TRANSPORTATION

FRAME & GRATES FOR TYPE G-1 AND TYPE G-1 SPECIAL DRAINAGE STRUCTURES /DISTRICT 4 DETAIL NO. 604001

SCALE: N/A | SHEET OF SHEETS | STA. TO STA.

F.A.P. RTE.	SECTION	COUNTY	TOTAL SHEETS	SHEET NO.
693	20-00196-01-RS	TAZEWELL	136	119
	13L0177A	CONTRACT NO. 89859		
	ILLINOIS	FED. AID PROJECT		

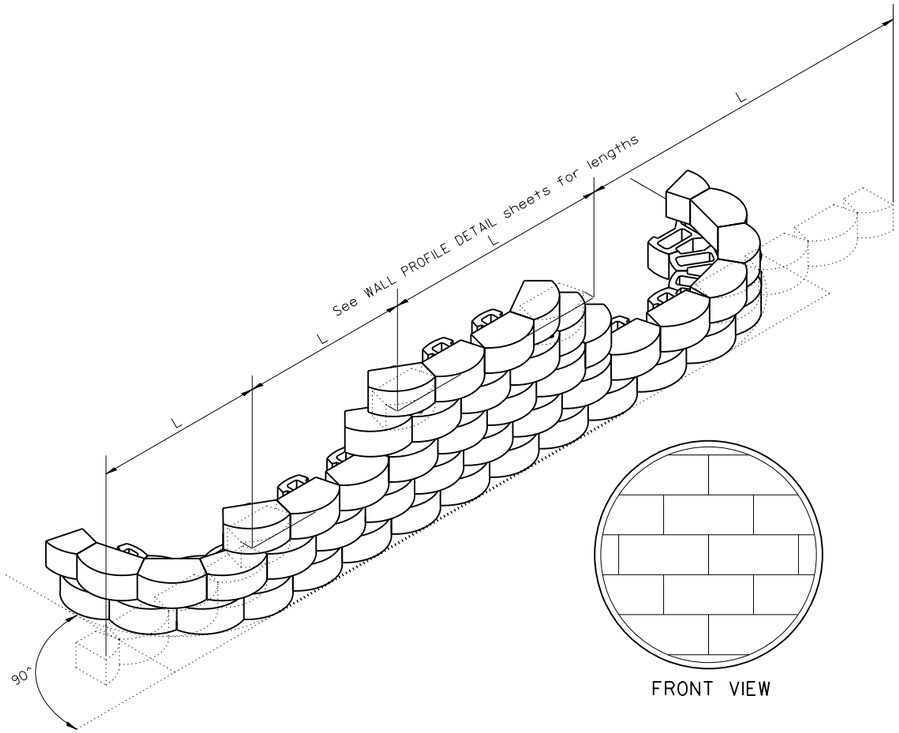

INSTALLATION OF COURSES IN RUNNING BOND

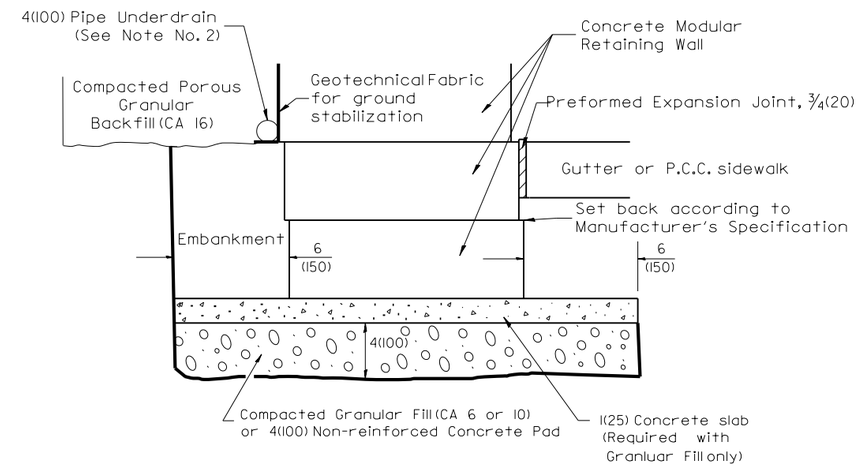

LEVELING BASE PAD DETAIL

NOTES:

1. At the Contractor's option the portion of the stone wall below top of sidewalk elevation may be constructed with class SI concrete. The width shall match the width of the modular block plus the 12(300) maximum trench.
2. 4(100) Pipe Underdrains shall outlet into inlets or storm sewer.
3. Pipe drains and pipe underdrains shall meet the requirements of the applicable portions of section 601 of the Standard Specifications.
4. Preformed expansion joint filler shall be placed between the gutter or sidewalk and the wall.
5. The geotechnical fabric shall meet the requirements of the applicable portions of Sections 210 and 1080 of the Standard Specifications.

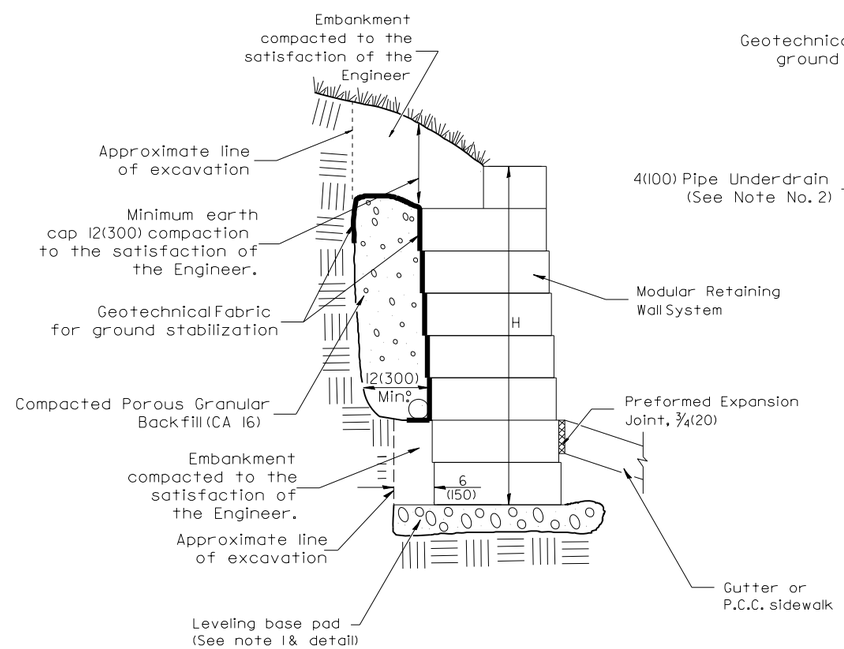

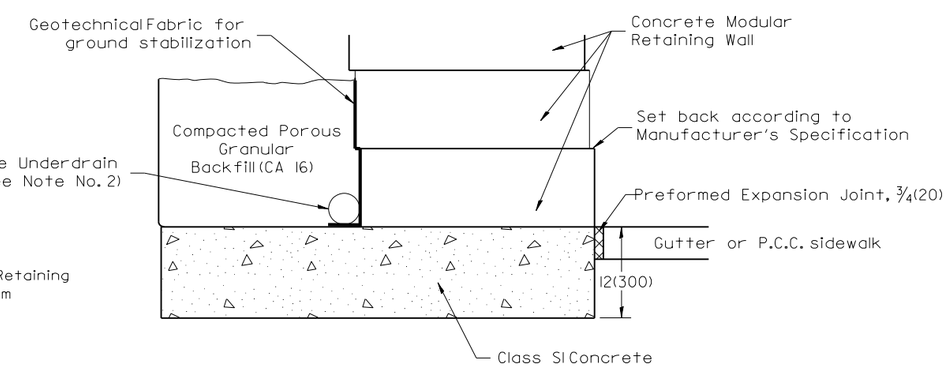

LEVELING BASE PAD
CONCRETE ALTERNATE
(See Note 1)

All dimensions are in inches (millimeters) unless otherwise noted.

DESIGNER NOTES:
1. Use in conjunction with Guide Bridge Special Provisions.

DESIGNED	JFC	7/26/2023 12:00:00 AM
DRAWN	RLA	7/26/2023 12:00:00 AM
REVIEWED	MGD	10/25/2024 12:00:00 AM

MODEL: sht-IDOTStandard13
FILE NAME: h:\13jobs\13L0177A\CADRoadSheet\Plan-Set 3 (8th-10th)\sht-IDOTstandard13.dgn

Final

USER NAME = ander00846	DESIGNED - SD/JC	REVISED -	
	DRAWN - RA/CL	REVISED -	
PLOT SCALE = 0.16666667 ' / in.	CHECKED - MGD	REVISED -	
PLOT DATE = 3/26/2025	DATE - 10/25/2024 12:00:00 AM	REVISED -	

STATE OF ILLINOIS
DEPARTMENT OF TRANSPORTATION

MODULAR RETAINING WALL SYSTEM DETAIL
DISTRICT 4 DETAIL NO. 660101

SCALE: N/A | SHEET OF SHEETS | STA. TO STA.

F.A.P. RTE.	SECTION	COUNTY	TOTAL SHEETS	SHEET NO.
693	20-00196-01-RS	TAZEWELL	136	120
	13L0177A	CONTRACT NO. 89859		
		ILLINOIS	FED. AID PROJECT	

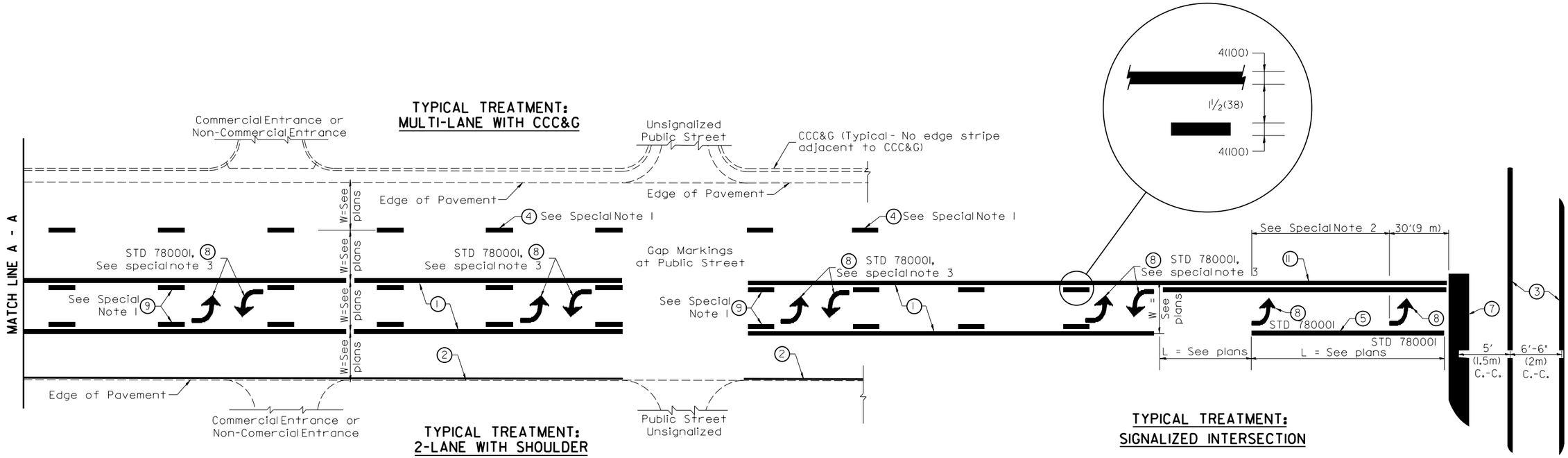

FLUSH PAVED MEDIAN: TWO-WAY LEFT TURN LANE WITH ONE-WAY LEFT TURN LANE AT SIGNALIZED INTERSECTION

TYPICAL PAVEMENT MARKING LEGEND

(Note: This is a District Standard Legend.
Some elements may not apply to specific project.)

1. 4(100) Solid (Yellow)
2. 4(100) Solid (White)
3. 2-6(150) Crosswalk @ 6'-6" (2m)min C.-C. (White)
   2-8(200) Crosswalk @ 6'-6" (2m)min C.-C. (White) (When traffic signals are present.)
4. 6(150) Skip-Dash (White) — 10' (3.05m) / 30' (9.14m) / 10' (3.05m) (See Special Note 1)
5. 8(200) Solid (White)
6. 12(300) Diagonal (White) (Item 6 is shown on Std. 78001)
7. 24(600) Stop Bar (White)
8. Letters & Arrows — 33' (10m) (See Std. 78001 and Special Notes 2 & 3)
9. 4(100) Skip-Dash (Yellow) — 10' (3.05m) / 30' (9.14m) / 10' (3.05m) (See Special Note 1)
10. 12(300) Diagonal (Yellow) (See Table A) — 45°
11. 4(100) Double Solid (Yellow) — 11(280) C.-C. — See Table A

SPECIAL NOTES

1. Skip-Dash markings will be centered between both ends of city blocks and shall be placed in alignment transversely across the pavement.
2. The following shall apply to arrows located in one-way left turn lanes:
   A. A minimum of two (2) arrows is required.
   B. The maximum spacing between arrows is 80' (24 m).
   C. Arrows shall be evenly spaced if three (3) or more are required.
3. The following shall apply to arrow pairs located in two-way left turn lanes:
   A. A minimum of two (2) arrow pairs is required.
   B. The maximum spacing between arrow pairs is 200' (61 m).
   C. Arrow pairs shall be evenly spaced if three (3) or more are required.
   D. The spacing between Bi Directional Left Turn Arrows is 33' (10 m).

GENERAL NOTES

1. Refer to State Standard 78001 for additional Pavement Markings including letters & arrows.
2. See Plans for Pavement Markings adjacent to curbed islands and medians, and through lane reductions.
3. Refer to Article 780.13 for letter, number and symbol areas (sq. ft.)
4. Areas are grooved 1" beyond each edge for the following symbols:
   Through Arrow= 14.8 sq. ft.
   Large Left or Right Arrow= 21.9 sq. ft.
   2 Arrow Combination Left (or Right) and Through= 34.9 sq. ft.
   Wrong Way Arrow= 29.5 sq. ft.
   Railroad Crossing Symbol= 69.8 sq. ft.
   (For further information, refer to BDE Special Provision: Grooving for Recessed Pavement Markings)

DESIGNER NOTES:
1. Include State Standard 78001 (Typical Pavement Markings)

DESIGNED	JFC	7/26/2023 12:00:00 AM
DRAWN	RLA	7/26/2023 12:00:00 AM
REVIEWED	MGD	10/25/2024 12:00:00 AM

MODEL: sht-IDOTstandard06
FILE NAME: I:\13jobs\13L0177A\CADRoad\Sheet\Plan-Set 3 (8th-10th)\sht-IDOTstandard14.dgn

Final

USER NAME = ander00846	DESIGNED - SD/JC	REVISED -	
	DRAWN - RA/CL	REVISED -	
PLOT SCALE = 0.16666667 ' / in.	CHECKED - MGD	REVISED -	
PLOT DATE = 3/26/2025	DATE - 10/25/2024 12:00:00 AM	REVISED -	

STATE OF ILLINOIS
DEPARTMENT OF TRANSPORTATION

TYPICAL PAVEMENT MARKINGS
DISTRICT 4 DETAIL NO. 780001

SCALE: N/A | SHEET OF SHEETS | STA. TO STA.

F.A.P. RTE.	SECTION	COUNTY	TOTAL SHEETS	SHEET NO.
693	20-00196-01-RS	TAZEWELL	136	121
	13L0177A	CONTRACT NO. 89859		
		ILLINOIS	FED. AID PROJECT	

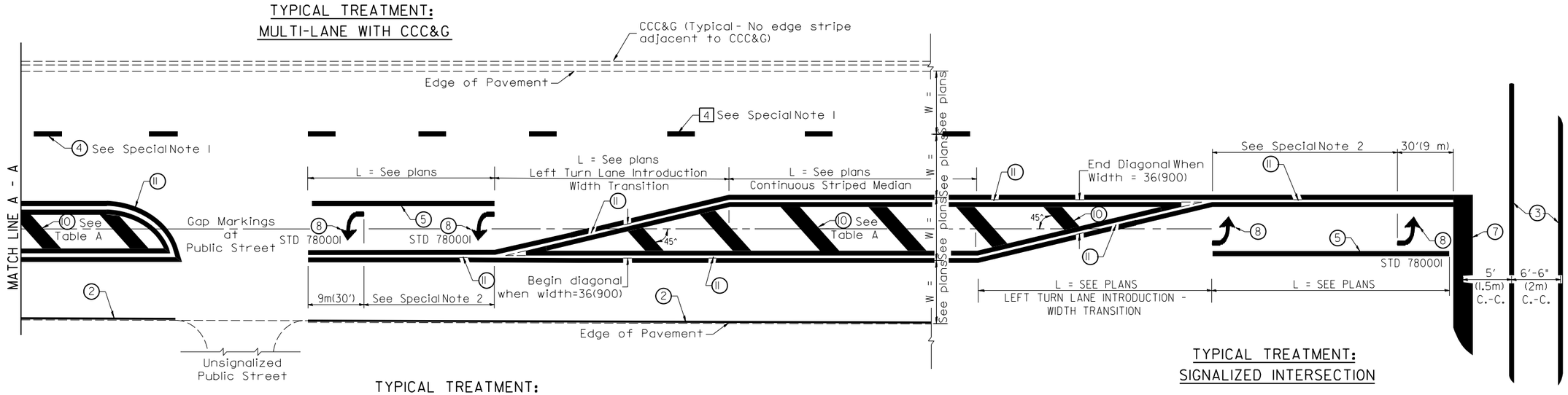

TYPICAL MEDIAN TRANSITIONS

FLUSH PAVED MEDIAN: RESTRICTED LEFT TURN LANE

TABLE A

RECOMMENDED SPACING BETWEEN DIAGONAL LINES

SPEED LIMIT RANGE	CONTINUOUS	INTERSECTION CHANNELIZATION (Includes Width Transitions for Median and Left Turn Lane Introductions)
Less Than 30 mph (50 km/h)	50' (15m)	15' (5m)
30 - 45 mph (50 - 70 km/h)	75' (23m)	20' (6m)
Over 45 mph (70 km/h)	150' (46m)	30' (9m)

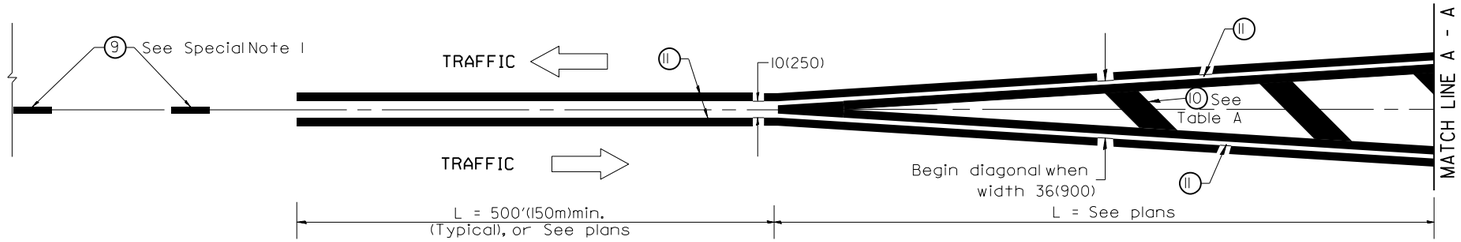

MEDIAN INTRODUCTION - WIDTH TRANSITIONS

All dimensions are in inches (millimeters) unless otherwise noted.

Final

USER NAME = ander00846	DESIGNED - SD/JC	REVISED -	
	DRAWN - RA/CL	REVISED -	
PLOT SCALE = 0.16666667 ' / in.	CHECKED - MGD	REVISED -	
PLOT DATE = 3/26/2025	DATE - 10/25/2024 12:00:00 AM	REVISED -	

STATE OF ILLINOIS
DEPARTMENT OF TRANSPORTATION

TYPICAL PAVEMENT MARKINGS
DISTRICT 4 DETAIL NO. 780001

SCALE: N/A | SHEET OF SHEETS | STA. TO STA.

F.A.P. RTE.	SECTION	COUNTY	TOTAL SHEETS	SHEET NO.
693	20-00196-01-RS	TAZEWELL	136	122
	13L0177A	CONTRACT NO. 89859		
	ILLINOIS	FED. AID PROJECT		

DESIGNED	JFC	7/26/2023 12:00:00 AM
DRAWN	RLA	7/26/2023 12:00:00 AM
REVIEWED	MGD	10/25/2024 12:00:00 AM

MODEL: sht-IDOTstandard07
FILE NAME: E:\13Jobs\13L0177A\CAD\RoadSheet\Plan-Set 3 (8th-10th)\sht-IDOTstandard15.dgn

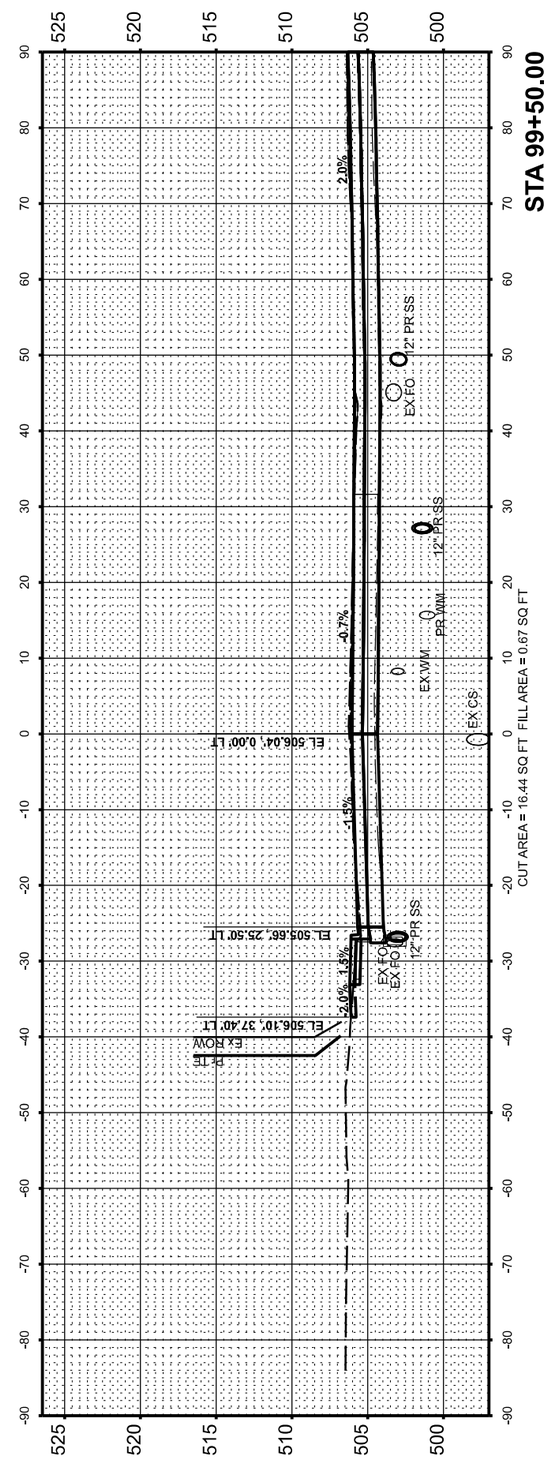

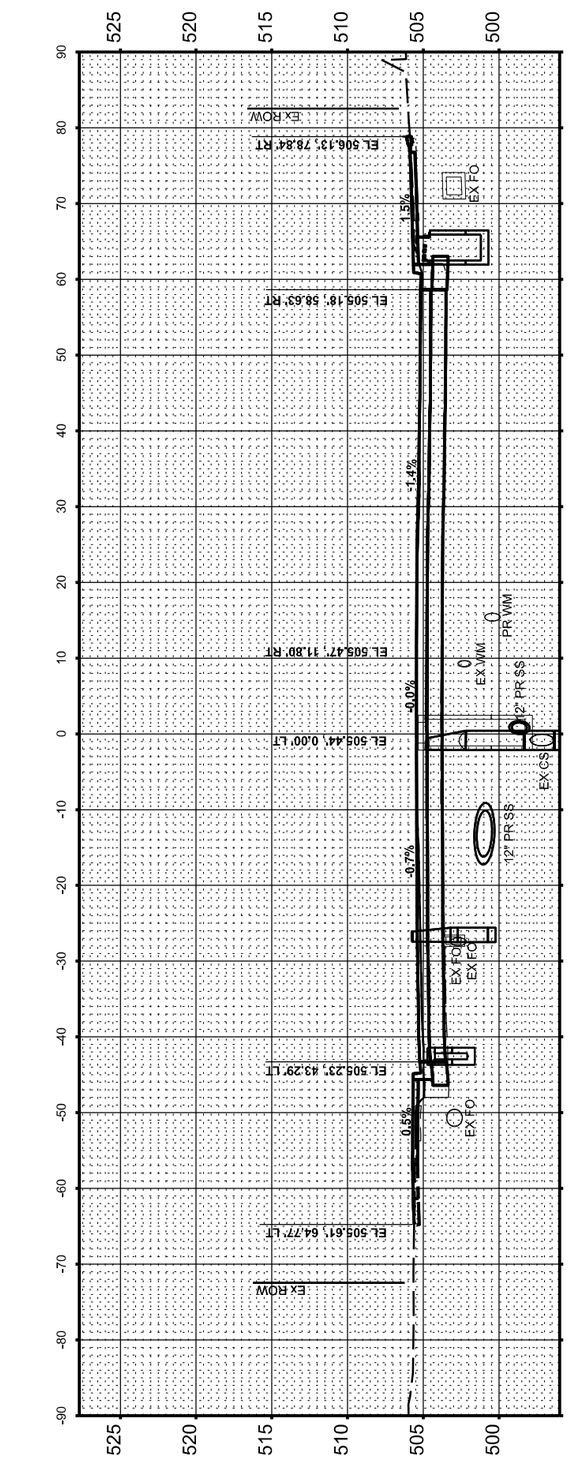

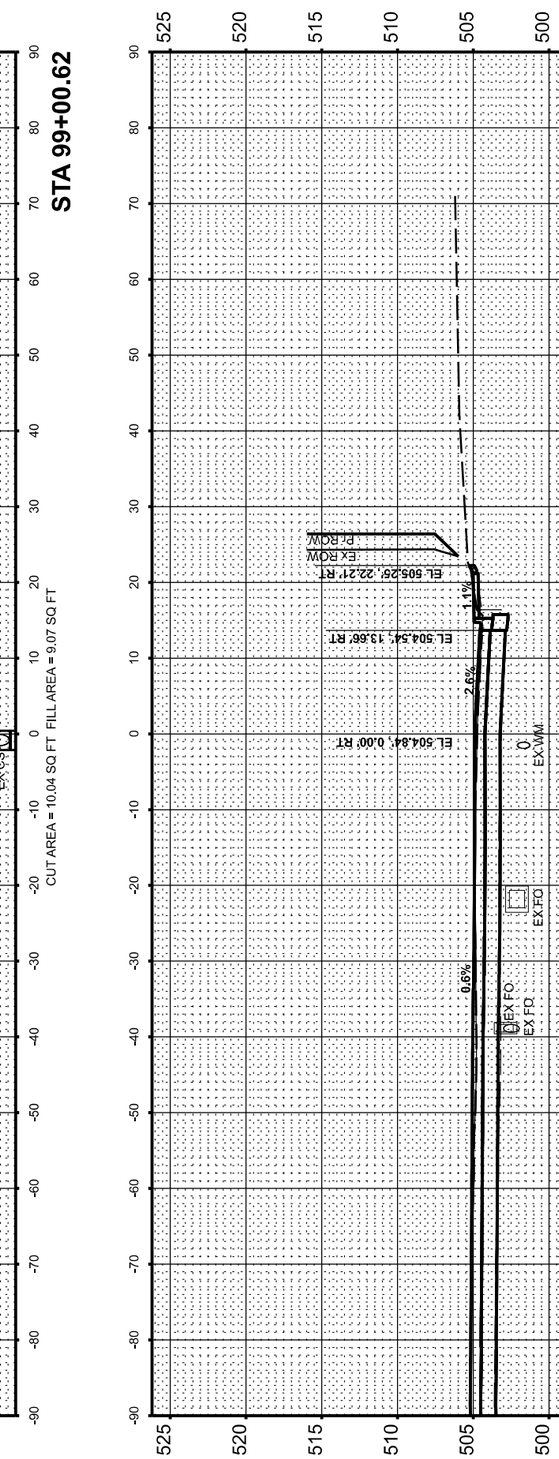

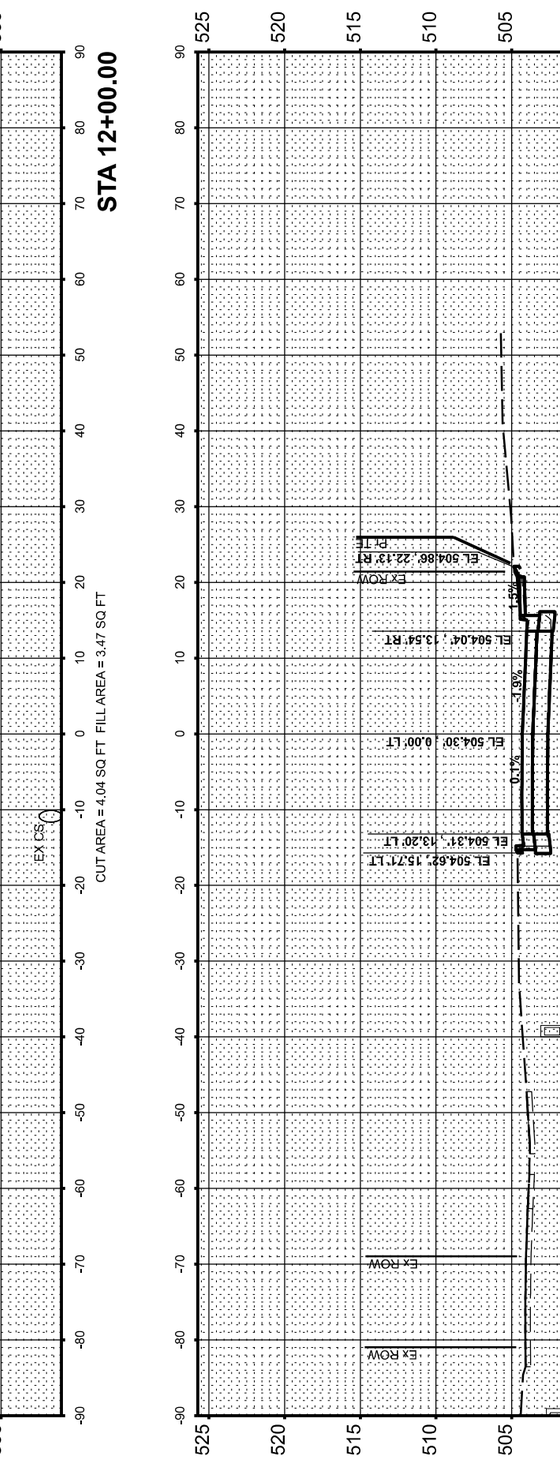

© Copyright Hanson Professional Services Inc. 2025

HANSON
Hanson Professional Services Inc.

FINAL SURVEY		BY	DATE
NOTE BOOK	SURVEYED		
	PLOTTED		
	TEMPLATE		
	AREAS		
NO.	AREAS CHECKED		

ORIGINAL SURVEY		BY	DATE
NOTE BOOK	SURVEYED		
	PLOTTED		
	TEMPLATE		
	AREAS		
NO.	AREAS CHECKED		

DESIGNED	CM	4/30/2024 12:00:00 AM
DRAWN	RLA	4/30/2024 12:00:00 AM
REVIEWED	MGD	10/25/2024 12:00:00 AM

MODEL: AL_CourtSt - 11+65.72 [Sheet]
FILE NAME: I:\13Jobs\13L0177A\CAD\Road\Model\PS3-XS.dgn

Final

USER NAME = ander00846	DESIGNED - SD/JC	REVISED -	
	DRAWN - RA/CL	REVISED -	
PLOT SCALE = 0.16666667 ' / in.	CHECKED - MGD	REVISED -	
PLOT DATE = 3/26/2025	DATE - 10/25/2024 12:00:00 AM	REVISED -	

STATE OF ILLINOIS
DEPARTMENT OF TRANSPORTATION

COURT STREET
CROSS SECTIONS

SCALE: 1" = 10' | SHEET OF SHEETS | STA.

F.A.P. RTE.	SECTION	COUNTY	TOTAL SHEETS	SHEET NO.
693	20-00196-02-RS	TAZEWELL	136	123
	13L0177A	CONTRACT NO. 89859		
		ILLINOIS	FED. AID PROJECT	

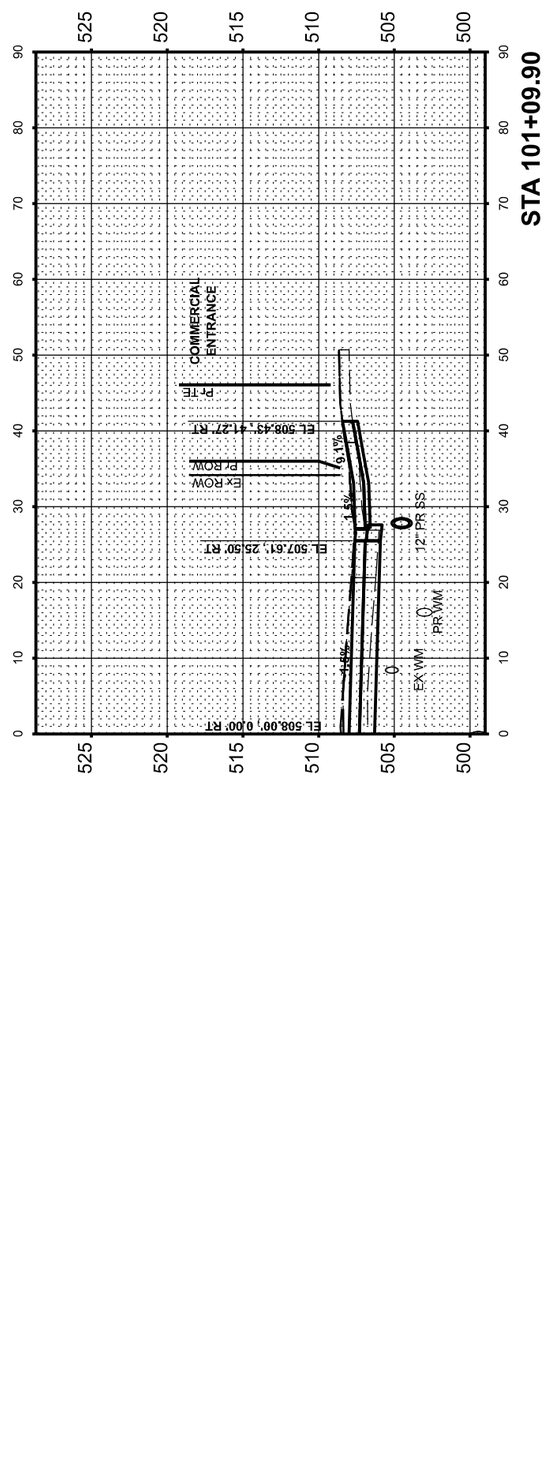

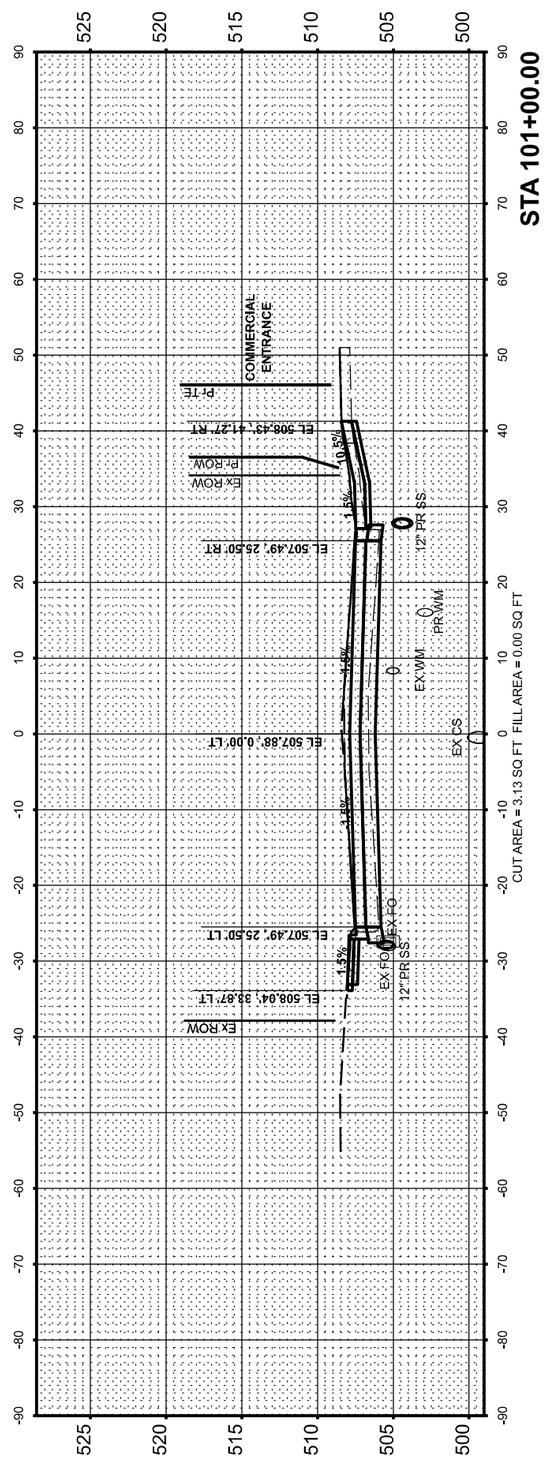

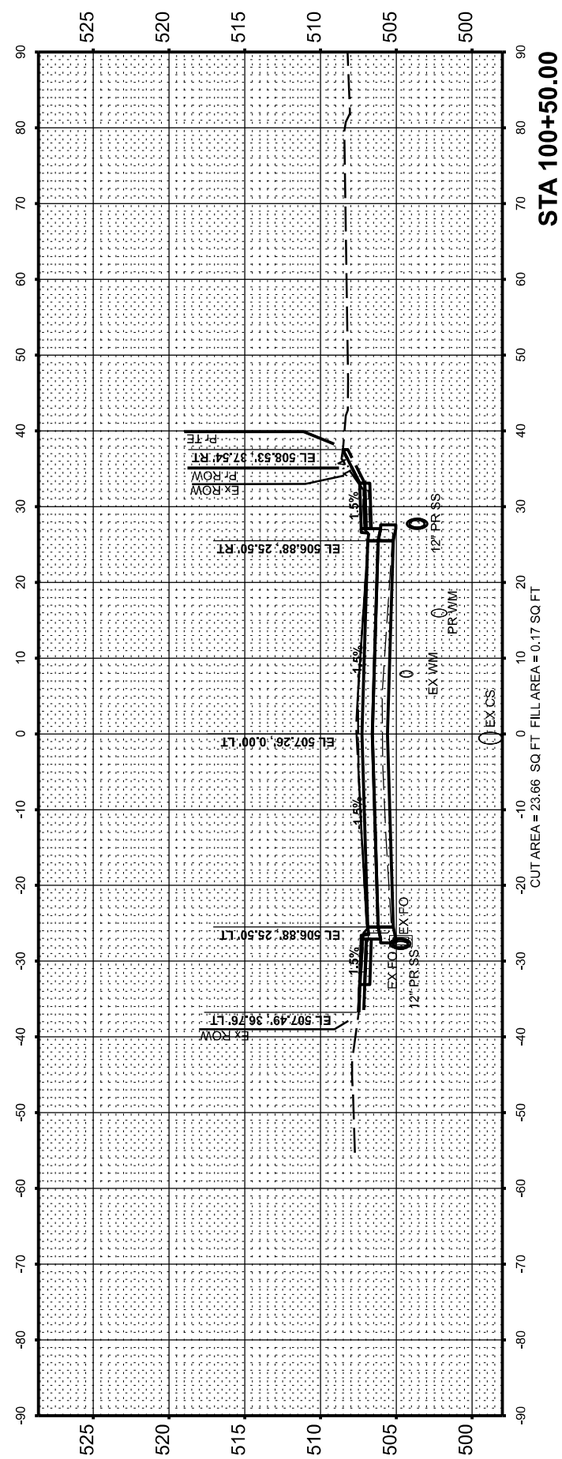

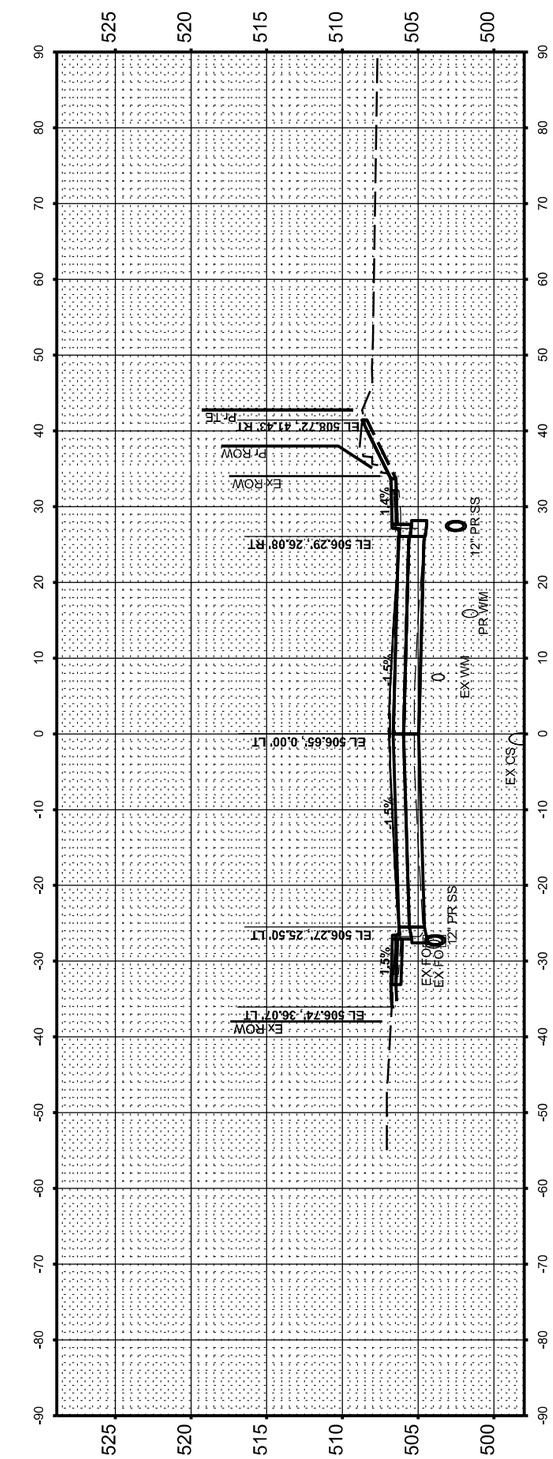

FINAL SURVEY		BY	DATE
NOTE BOOK	SURVEYED		
	PLOTTED		
	TEMPLATE		
	AREAS		
NO.	AREAS CHECKED		

ORIGINAL SURVEY		BY	DATE
NOTE BOOK	SURVEYED		
	PLOTTED		
	TEMPLATE		
	AREAS		
NO.	AREAS CHECKED		

© Copyright Hanson Professional Services Inc. 2025

HANSON
Hanson Professional Services Inc.

DESIGNED	CM	4/30/2024 12:00:00 AM
DRAWN	RLA	4/30/2024 12:00:00 AM
REVIEWED	MGD	10/25/2024 12:00:00 AM

MODEL: AL_CourtSt - 100+00.00 [Sheet]
FILE NAME: I:\13\obs\13L0177A\CAD\Road\Model\PS3-XS.dgn

Final

USER NAME = ander00846	DESIGNED - SD/JC	REVISED -	
	DRAWN - RA/CL	REVISED -	
PLOT SCALE = 0.16666667 ' / in.	CHECKED - MGD	REVISED -	
PLOT DATE = 3/26/2025	DATE - 10/25/2024 12:00:00 AM	REVISED -	

STATE OF ILLINOIS
DEPARTMENT OF TRANSPORTATION

COURT STREET
CROSS SECTIONS

SCALE: 1" = 10' | SHEET OF SHEETS | STA.

F.A.P. RTE.	SECTION	COUNTY	TOTAL SHEETS	SHEET NO.
693	20-00196-02-RS	TAZEWELL	136	124
	13L0177A	CONTRACT NO. 89859		
		ILLINOIS	FED. AID PROJECT	

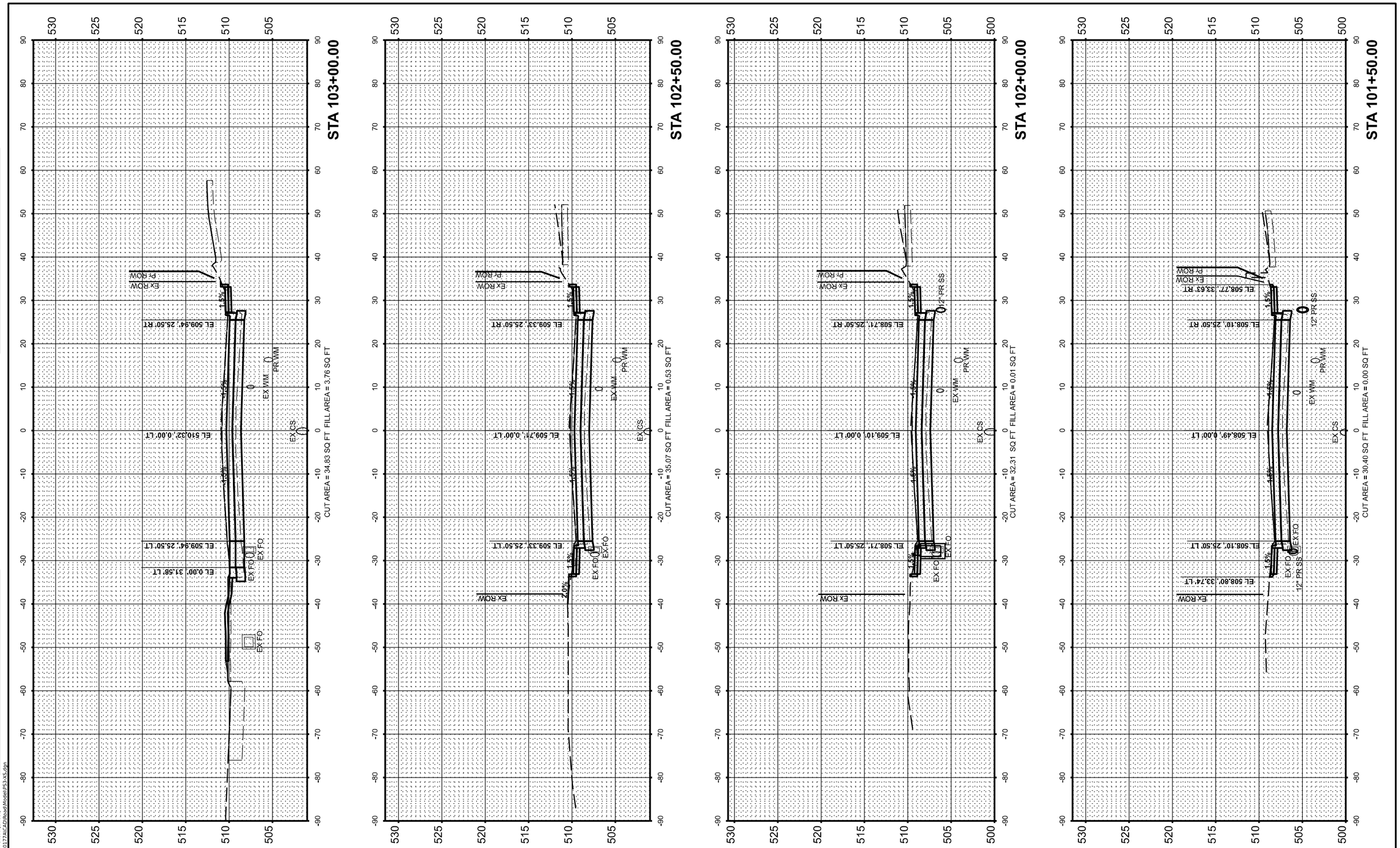

DESIGNED	CM	4/30/2024 12:00:00 AM	ORIGINAL SURVEY	SURVEYED	BY	DATE
DRAWN	RLA	4/30/2024 12:00:00 AM		PLOTTED		
REVIEWED	MGD	10/25/2024 12:00:00 AM	NOTE BOOK	TEMPLATE		
				AREAS		
			NO.	AREAS CHECKED		

MODEL: AL_CourtSt - 101+50.00 [Sheet]
FILE NAME: I:\13jobs\13L0177A\CAD\Road\Model\PS3-XS.dgn

FINAL SURVEY	SURVEYED	BY	DATE
	PLOTTED		
NOTE BOOK	TEMPLATE		
	AREAS		
NO.	AREAS CHECKED		

© Copyright Hanson Professional Services Inc. 2025

HANSON
Hanson Professional Services Inc.

Final

USER NAME = ander00846	DESIGNED - SD/JC	REVISED -	
	DRAWN - RA/CL	REVISED -	
PLOT SCALE = 0.16666667 ' / in.	CHECKED - MGD	REVISED -	
PLOT DATE = 3/26/2025	DATE - 10/25/2024 12:00:00 AM	REVISED -	

STATE OF ILLINOIS
DEPARTMENT OF TRANSPORTATION

COURT STREET
CROSS SECTIONS

SCALE: 1" = 10' | SHEET OF SHEETS | STA.

F.A.P. RTE.	SECTION	COUNTY	TOTAL SHEETS	SHEET NO.
693	20-00196-02-RS	TAZEWELL	136	125
	13L0177A	CONTRACT NO. 89859		
		ILLINOIS	FED. AID PROJECT	

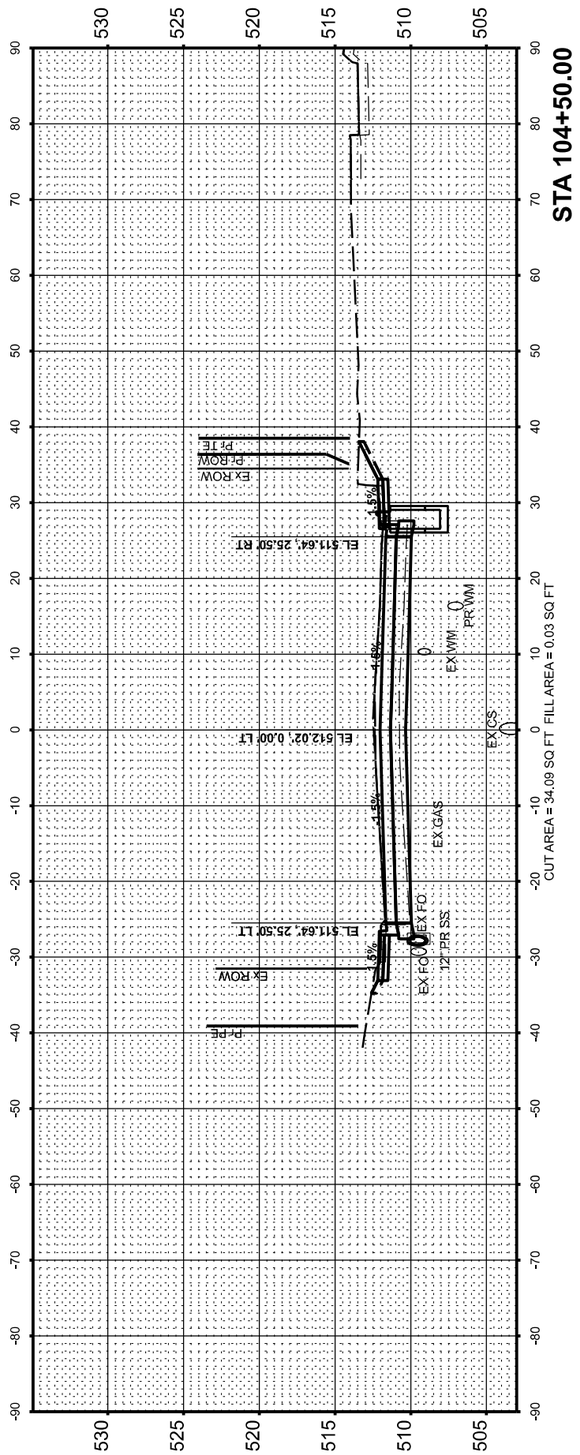

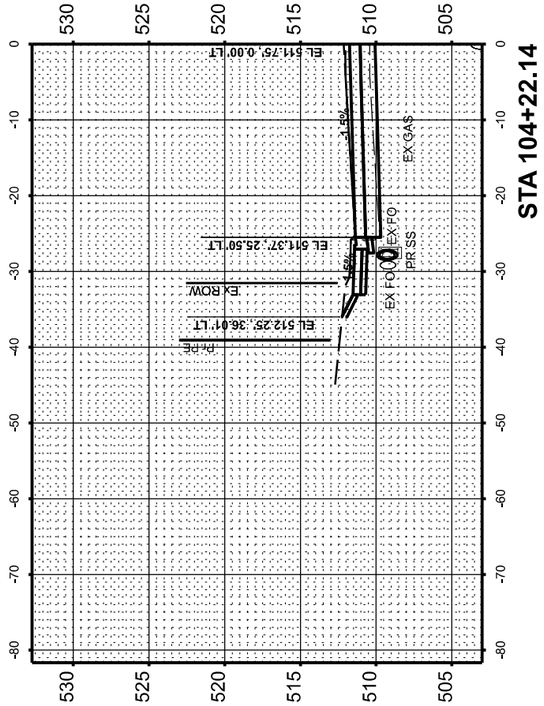

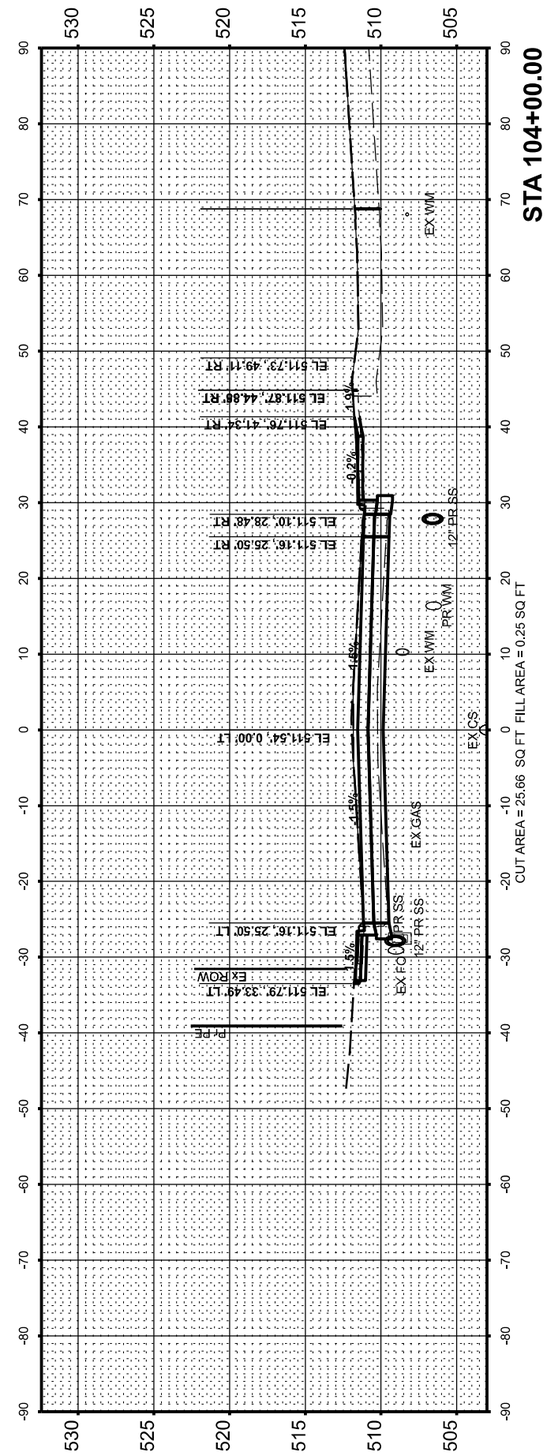

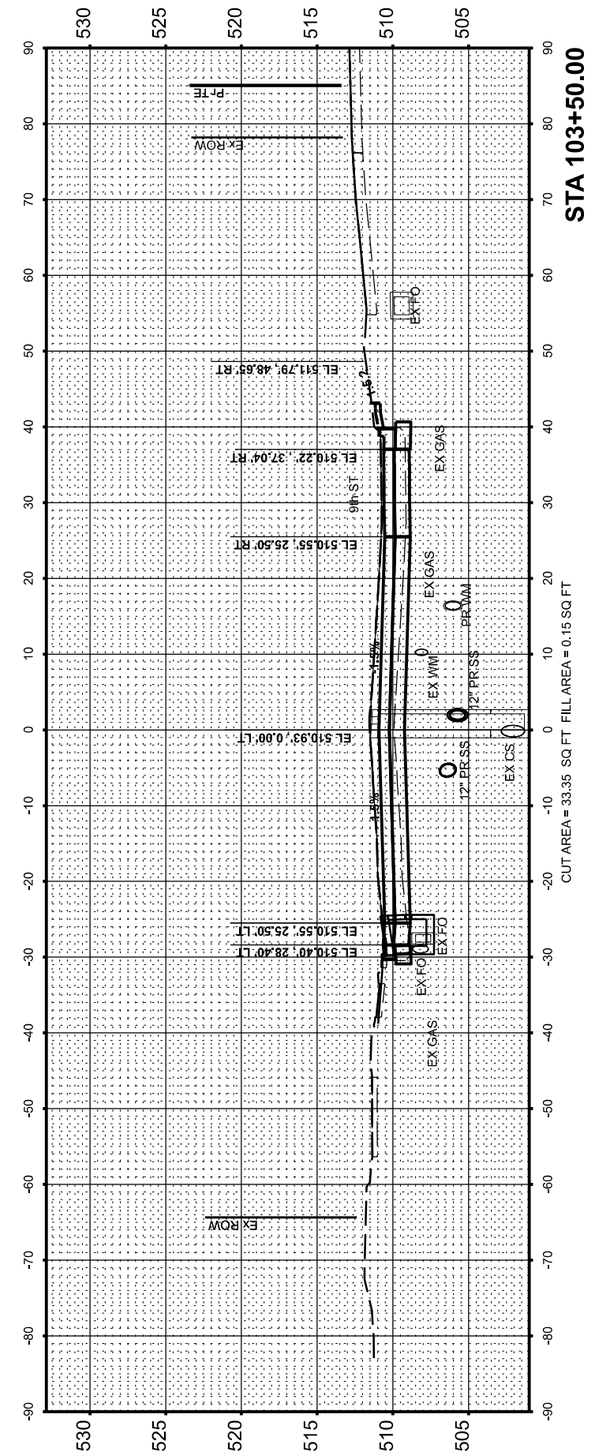

FINAL SURVEY	BY	DATE
SURVEYED		
PLOTTED		
TEMPLATE		
AREAS		
AREAS CHECKED		

NOTE BOOK NO.

ORIGINAL SURVEY	BY	DATE
SURVEYED		
PLOTTED		
TEMPLATE		
AREAS		
AREAS CHECKED		

NOTE BOOK NO.

© Copyright Hanson Professional Services Inc. 2025

HANSON
Hanson Professional Services Inc.

DESIGNED	CM	4/30/2024 12:00:00 AM
DRAWN	RLA	4/30/2024 12:00:00 AM
REVIEWED	MGD	10/25/2024 12:00:00 AM

MODEL: AL_CourtSt - 103+50.00 [Sheet]
FILE NAME: h:\13jobs\13L0177A\CADD\Road\Model\PS3-XS.dgn

Final

USER NAME = ander00846	DESIGNED - SD/JC	REVISED -	
	DRAWN - RA/CL	REVISED -	
PLOT SCALE = 0.16666667 ' / in.	CHECKED - MGD	REVISED -	
PLOT DATE = 3/26/2025	DATE - 10/25/2024 12:00:00 AM	REVISED -	

STATE OF ILLINOIS
DEPARTMENT OF TRANSPORTATION

COURT STREET
CROSS SECTIONS

SCALE: 1" = 10' | SHEET OF SHEETS | STA.

F.A.P. RTE.	SECTION	COUNTY	TOTAL SHEETS	SHEET NO.
693	20-00196-02-RS	TAZEWELL	136	126
	13L0177A	CONTRACT NO. 89859		
	ILLINOIS	FED. AID PROJECT		

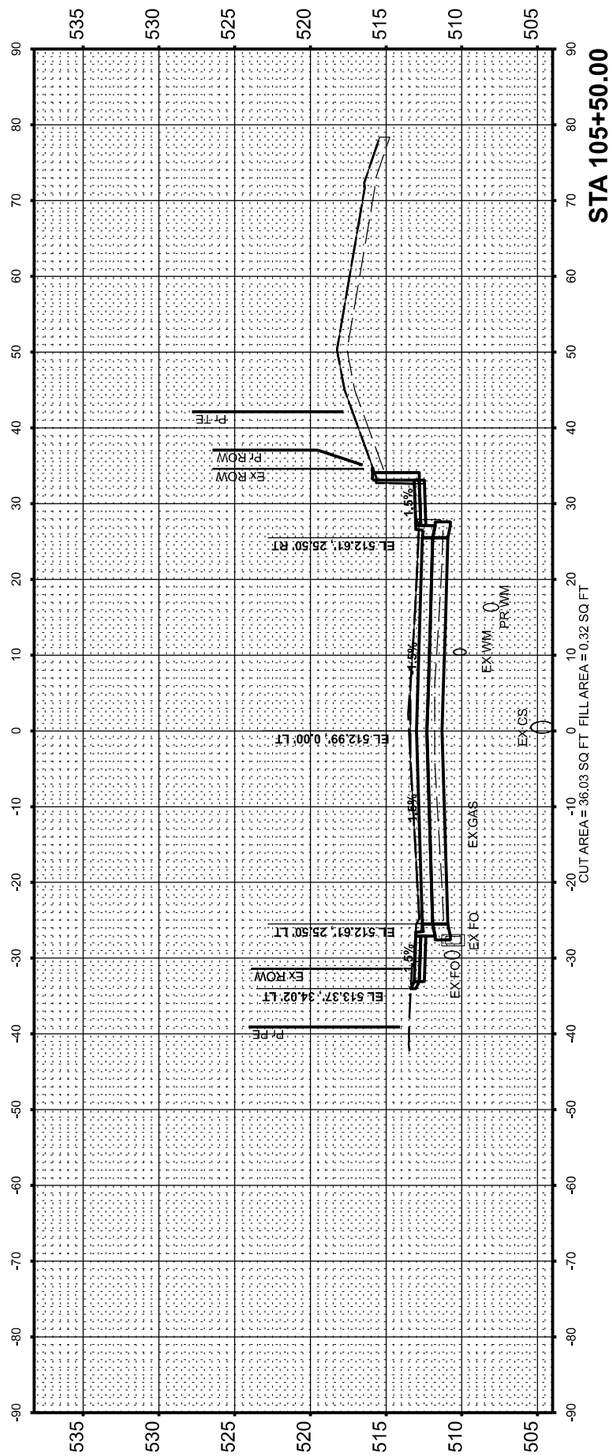

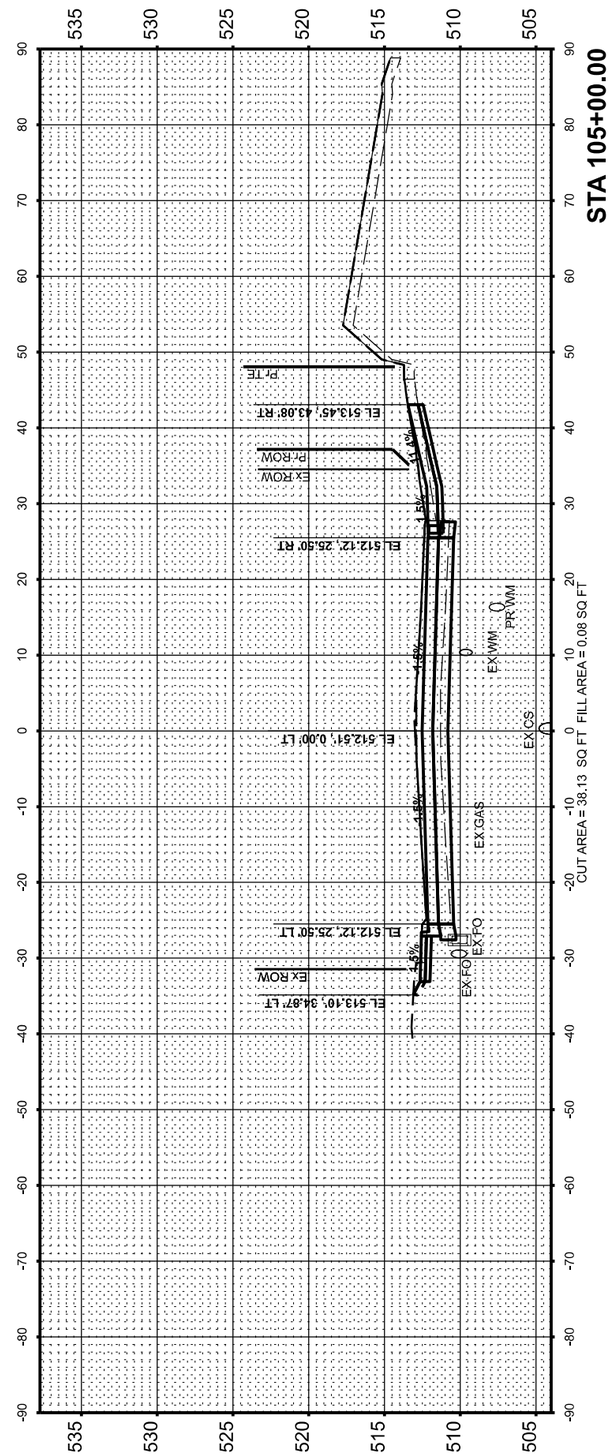

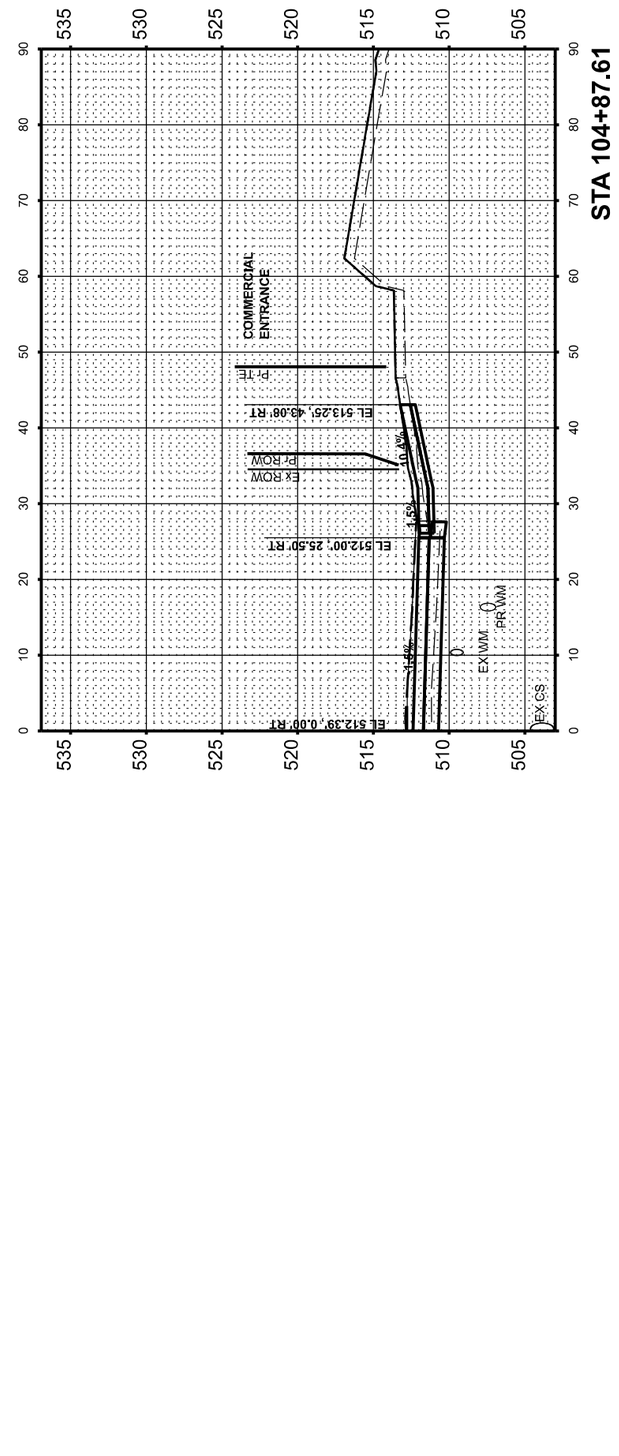

© Copyright Hanson Professional Services Inc. 2025

HANSON
Hanson Professional Services Inc.

FINAL SURVEY		BY	DATE
NOTE BOOK	SURVEYED		
	PLOTTED		
	TEMPLATE		
	AREAS		
NO.	AREAS CHECKED		

ORIGINAL SURVEY		BY	DATE
NOTE BOOK	SURVEYED		
	PLOTTED		
	TEMPLATE		
	AREAS		
NO.	AREAS CHECKED		

DESIGNED	CM	4/30/2024 12:00:00 AM
DRAWN	RLA	4/30/2024 12:00:00 AM
REVIEWED	MGD	10/25/2024 12:00:00 AM

MODEL: AL_CourtSt - 104+87.61 [Sheet]
FILE NAME: I:\13jobs\13L0177A\CAD\Road\Model\PS3-XS.dgn

Final

USER NAME = ander00846	DESIGNED - SD/JC	REVISED -	
	DRAWN - RA/CL	REVISED -	
PLOT SCALE = 0.16666667 ' / in.	CHECKED - MGD	REVISED -	
PLOT DATE = 3/26/2025	DATE - 10/25/2024 12:00:00 AM	REVISED -	

STATE OF ILLINOIS
DEPARTMENT OF TRANSPORTATION

COURT STREET
CROSS SECTIONS

SCALE: 1" = 10' | SHEET OF SHEETS | STA.

F.A.P. RTE.	SECTION	COUNTY	TOTAL SHEETS	SHEET NO.
693	20-00196-02-RS	TAZEWELL	136	127
	13L0177A	CONTRACT NO. 89859		
		ILLINOIS	FED. AID PROJECT	

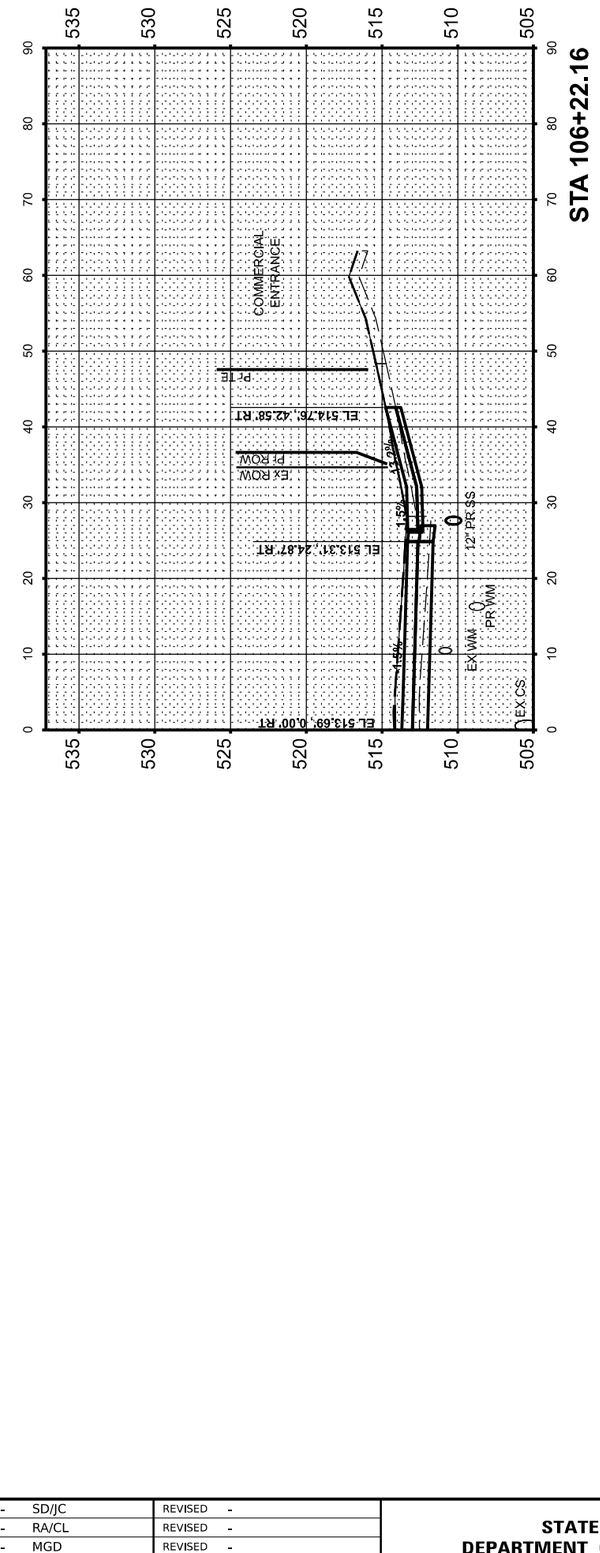

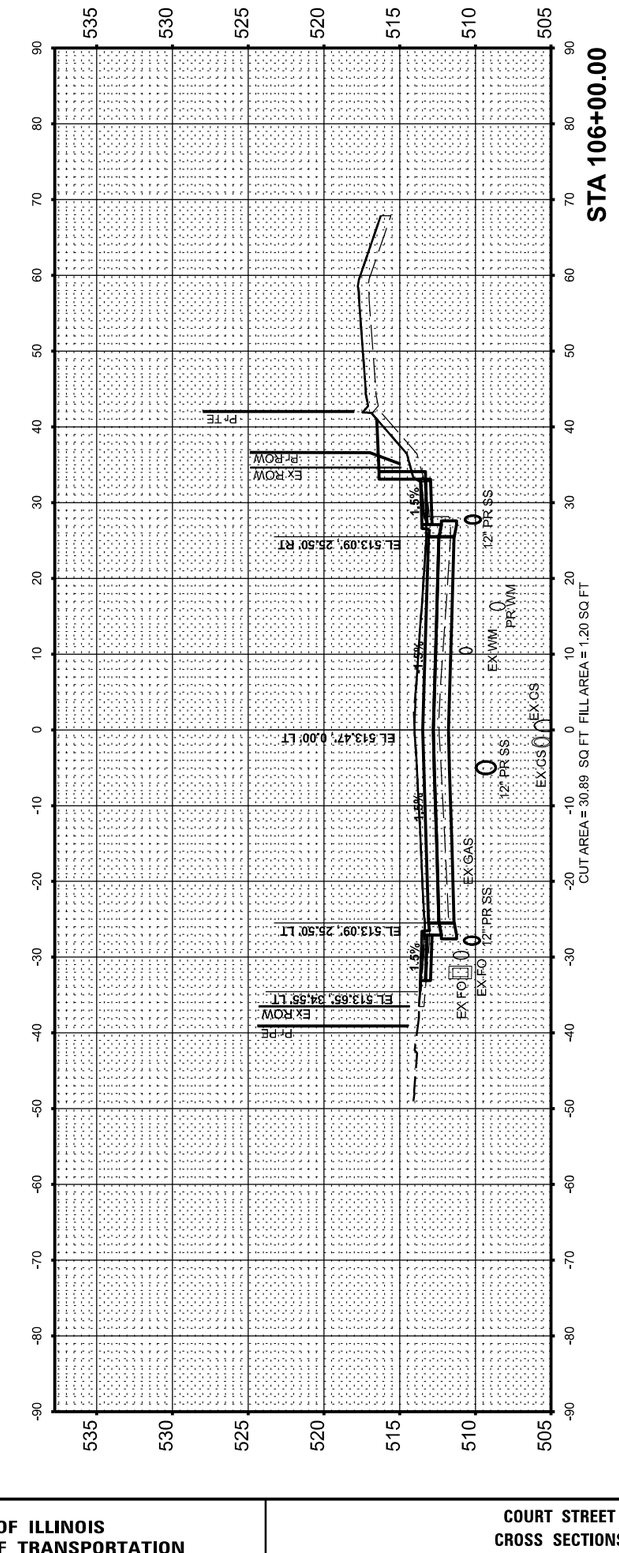

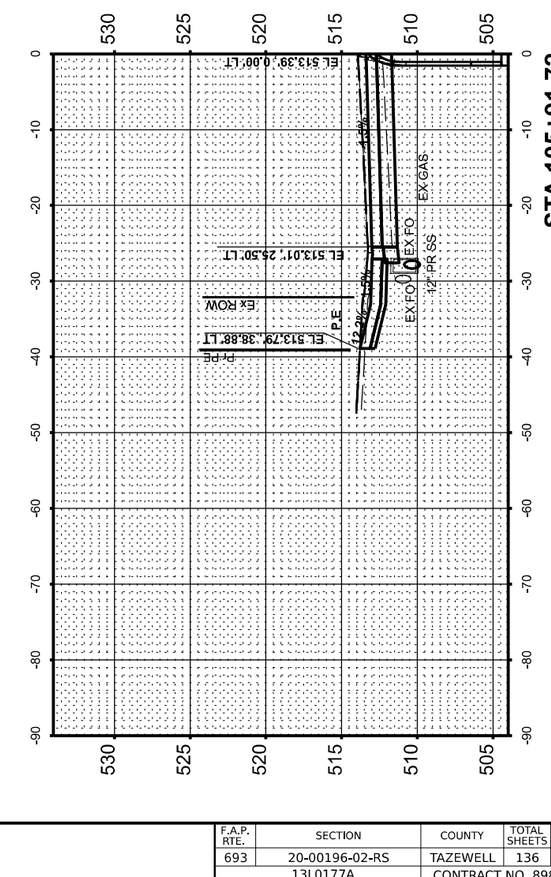

FINAL SURVEY		BY	DATE
NOTE BOOK	SURVEYED		
	PLOTTED		
	TEMPLATE		
	AREAS		
NO.	AREAS CHECKED		

ORIGINAL SURVEY		BY	DATE
NOTE BOOK	SURVEYED		
	PLOTTED		
	TEMPLATE		
	AREAS		
NO.	AREAS CHECKED		

© Copyright Hanson Professional Services Inc. 2025

HANSON
Hanson Professional Services Inc.

DESIGNED	CM	4/30/2024 12:00:00 AM
DRAWN	RLA	4/30/2024 12:00:00 AM
REVIEWED	MGD	10/25/2024 12:00:00 AM

MODEL: AL_CourtSt - 105+91.72 [Sheet]
FILE NAME: I:\13\obs\13L0177A\CAD\Road\Model\PS3-XS.dgn

Final

USER NAME = ander00846	DESIGNED - SD/JC	REVISED -	
	DRAWN - RA/CL	REVISED -	
PLOT SCALE = 0.16666667 ' / in.	CHECKED - MGD	REVISED -	
PLOT DATE = 3/26/2025	DATE - 10/25/2024 12:00:00 AM	REVISED -	

STATE OF ILLINOIS
DEPARTMENT OF TRANSPORTATION

COURT STREET
CROSS SECTIONS

SCALE: 1" = 10' | SHEET OF SHEETS | STA.

F.A.P. RTE.	SECTION	COUNTY	TOTAL SHEETS	SHEET NO.
693	20-00196-02-RS	TAZEWELL	136	128
	13L0177A	CONTRACT NO. 89859		
	ILLINOIS	FED. AID PROJECT		

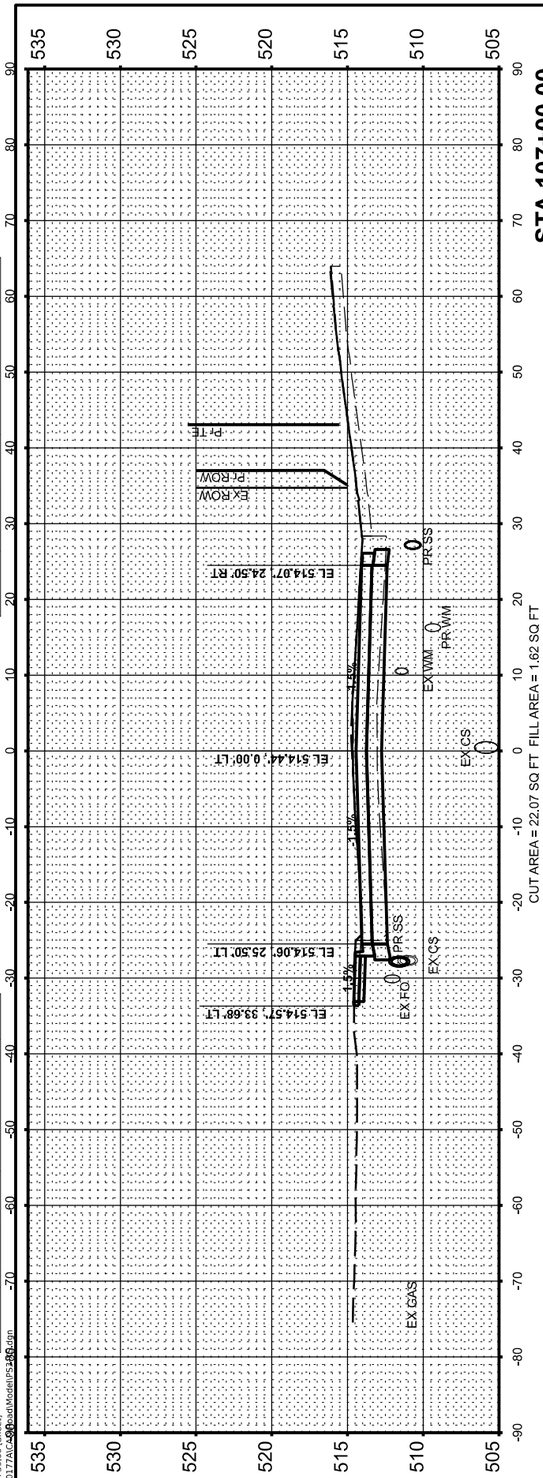

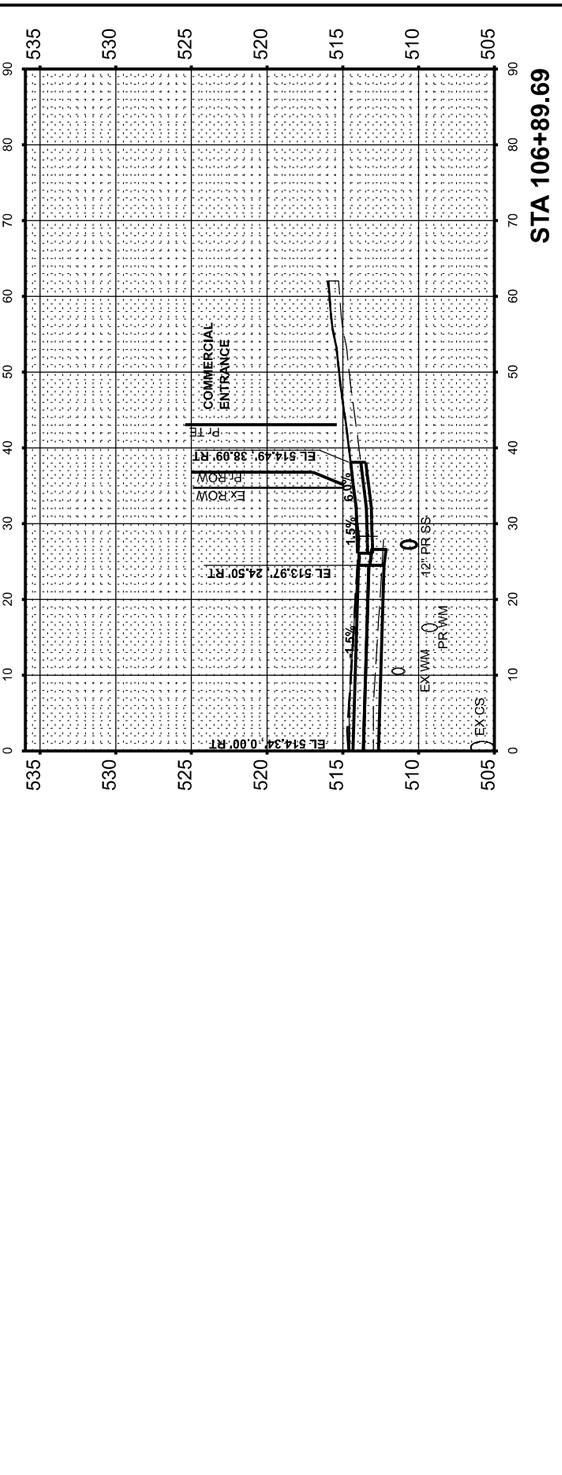

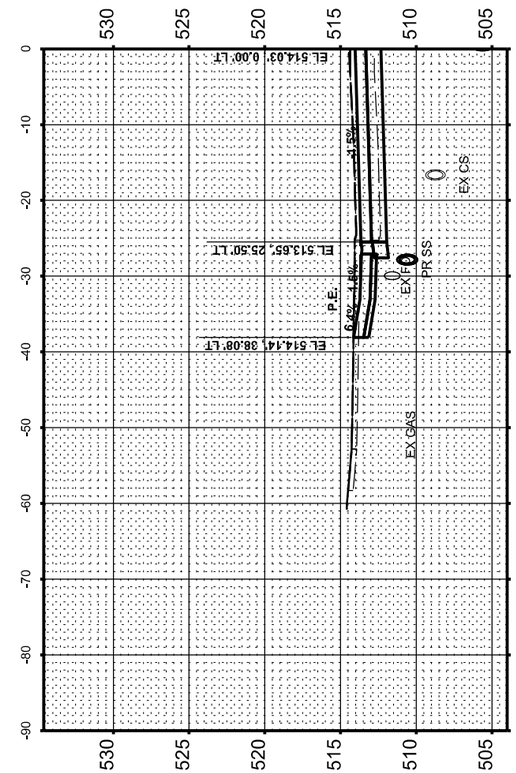

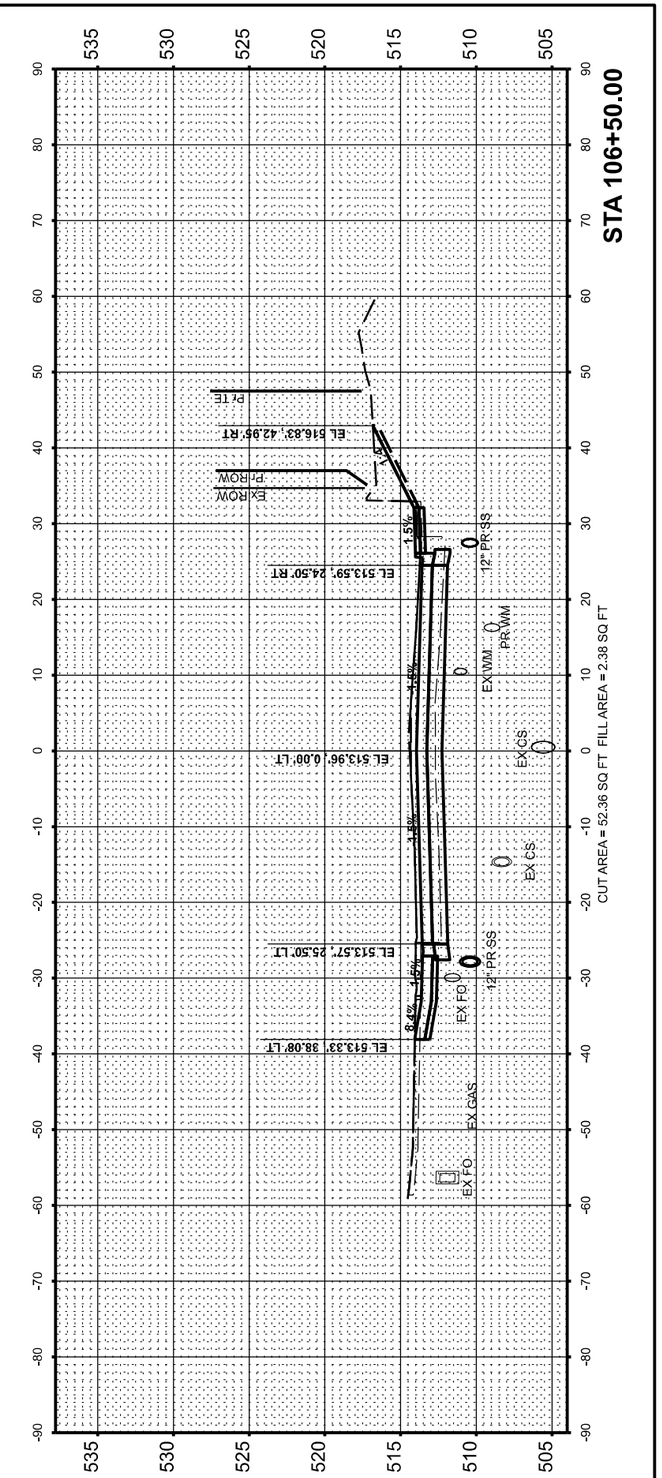

© Copyright Hanson Professional Services Inc. 2025

HANSON
Hanson Professional Services Inc.

FINAL SURVEY	BY	DATE
NOTE BOOK	SURVEYED	
NO.	PLOTTED	
	TEMPLATE	
	AREAS	
	AREAS CHECKED	

ORIGINAL SURVEY	BY	DATE
NOTE BOOK	SURVEYED	
NO.	PLOTTED	
	TEMPLATE	
	AREAS	
	AREAS CHECKED	

DESIGNED	CM	4/30/2024 12:00:00 AM
DRAWN	RLA	4/30/2024 12:00:00 AM
REVIEWED	MGD	10/25/2024 12:00:00 AM

MODEL: AL_CourtSt - 106+50.00 [Sheet]
FILE NAME: I:\13\obs\13L0177A\CAD\Road\Model\PS13L0177A.dgn

Final

USER NAME = ander00846	DESIGNED - SD/JC	REVISED -	
	DRAWN - RA/CL	REVISED -	
PLOT SCALE = 0.16666667 ' / in.	CHECKED - MGD	REVISED -	
PLOT DATE = 3/26/2025	DATE - 10/25/2024 12:00:00 AM	REVISED -	

STATE OF ILLINOIS
DEPARTMENT OF TRANSPORTATION

COURT STREET
CROSS SECTIONS

SCALE: 1" = 10' | SHEET OF SHEETS | STA.

F.A.P. RTE.	SECTION	COUNTY	TOTAL SHEETS	SHEET NO.
693	20-00196-02-RS	TAZEWELL	136	129
	13L0177A	CONTRACT NO. 89859		
		ILLINOIS	FED. AID PROJECT	

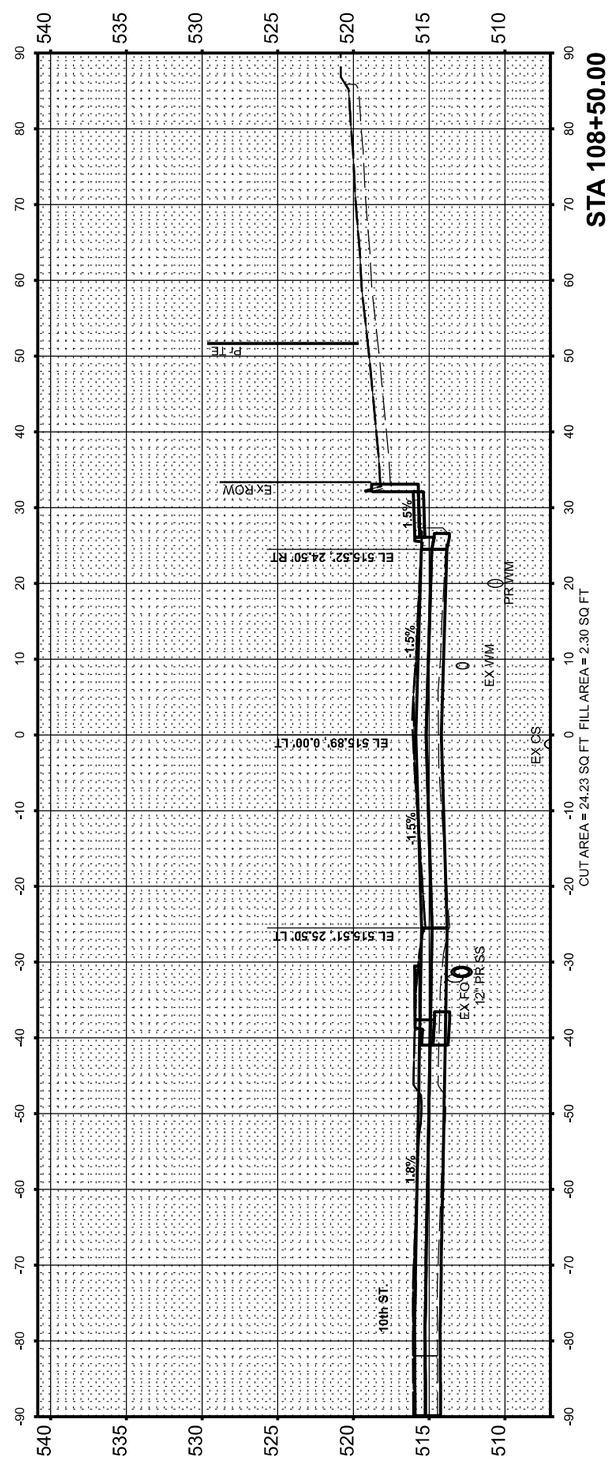

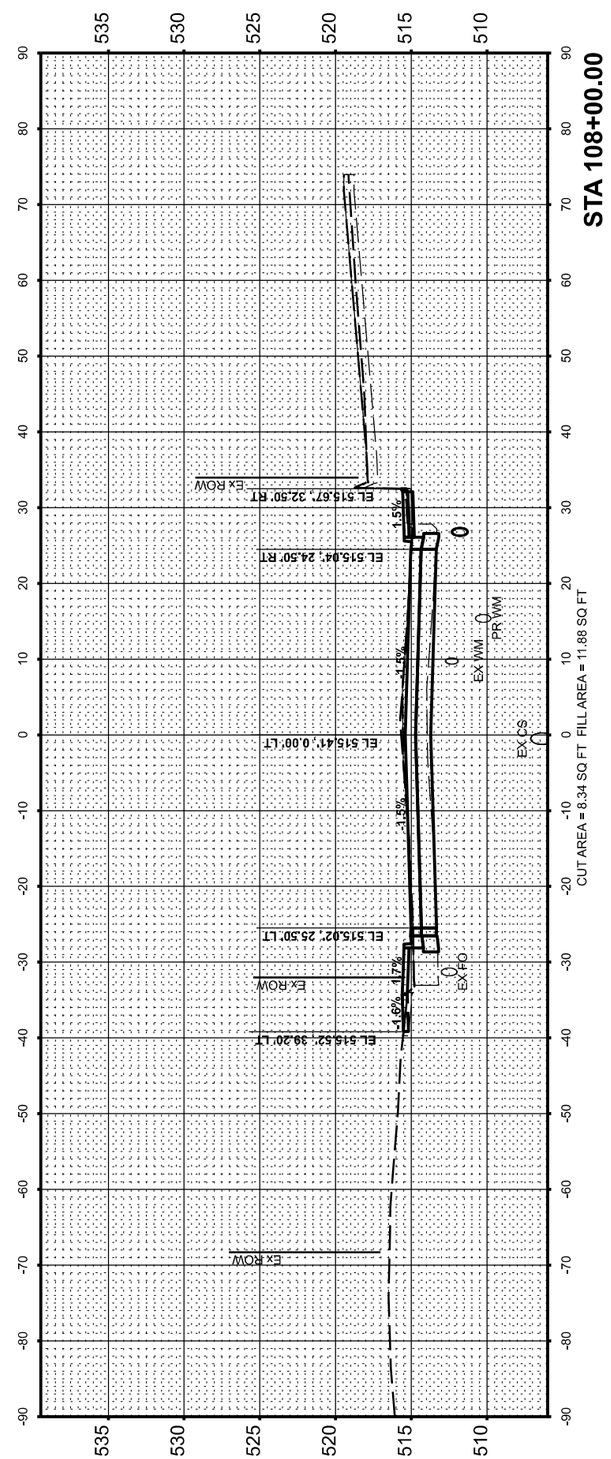

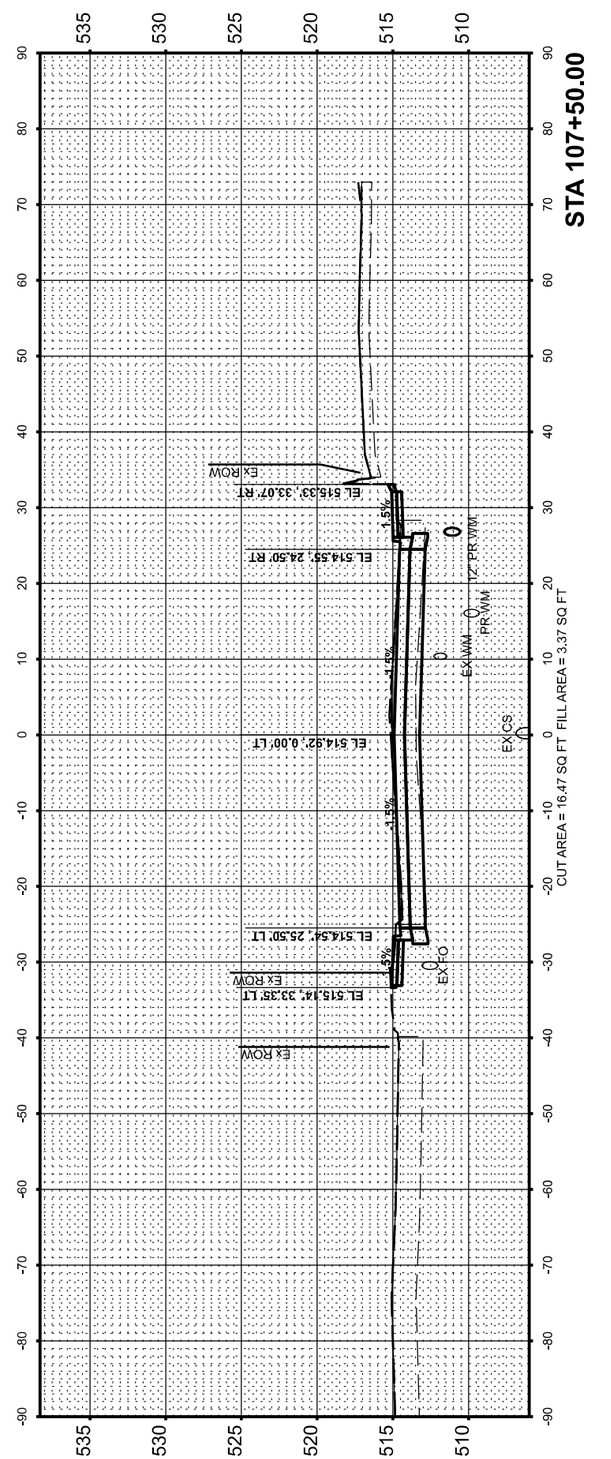

© Copyright Hanson Professional Services Inc. 2025

HANSON
Hanson Professional Services Inc.

FINAL SURVEY		BY	DATE
NOTE BOOK	SURVEYED		
	PLOTTED		
	TEMPLATE		
	AREAS		
NO.	AREAS CHECKED		

ORIGINAL SURVEY		BY	DATE
NOTE BOOK	SURVEYED		
	PLOTTED		
	TEMPLATE		
	AREAS		
NO.	AREAS CHECKED		

DESIGNED	CM	4/30/2024 12:00:00 AM
DRAWN	RLA	4/30/2024 12:00:00 AM
REVIEWED	MGD	10/25/2024 12:00:00 AM

MODEL: AL_CourtSt - 107+50.00 [Sheet]
FILE NAME: I:\13jobs\13L0177A\CAD\Road\Model\PS3-XS.dgn

Final

USER NAME = ander00846	DESIGNED - SD/JC	REVISED -	
	DRAWN - RA/CL	REVISED -	
PLOT SCALE = 0.16666667 ' / in.	CHECKED - MGD	REVISED -	
PLOT DATE = 3/26/2025	DATE - 10/25/2024 12:00:00 AM	REVISED -	

STATE OF ILLINOIS
DEPARTMENT OF TRANSPORTATION

COURT STREET
CROSS SECTIONS

SCALE: 1" = 10' | SHEET OF SHEETS | STA.

F.A.P. RTE.	SECTION	COUNTY	TOTAL SHEETS	SHEET NO.
693	20-00196-02-RS	TAZEWELL	136	130
	13L0177A	CONTRACT NO. 89859		
	ILLINOIS	FED. AID PROJECT		

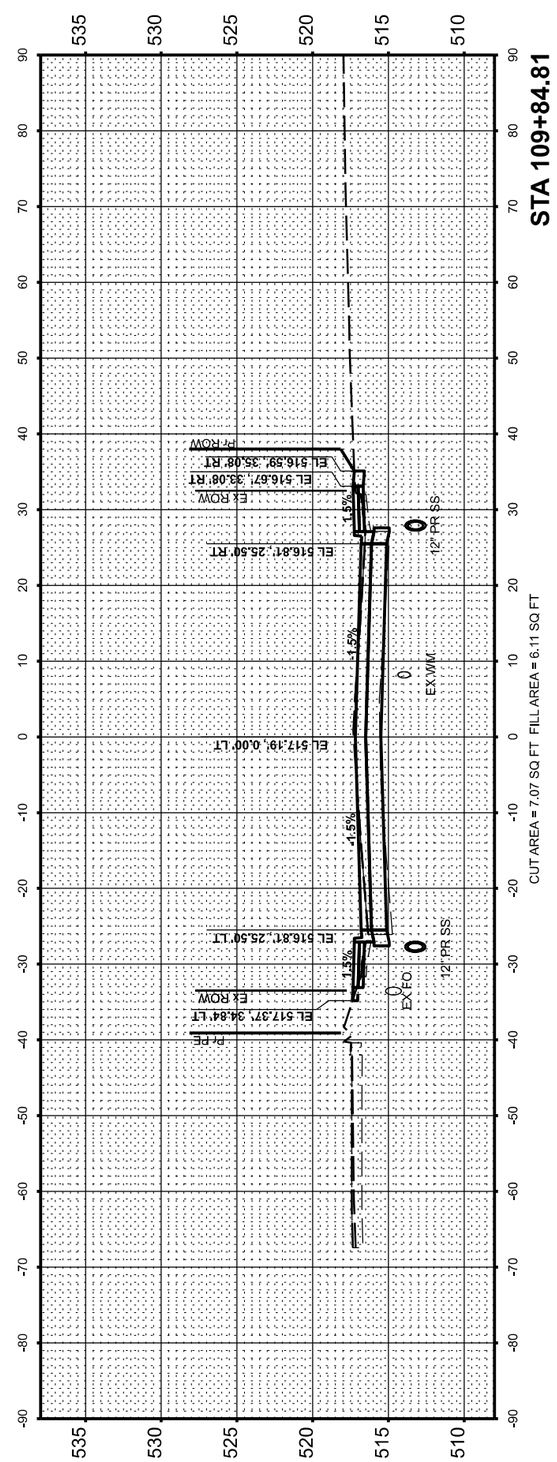

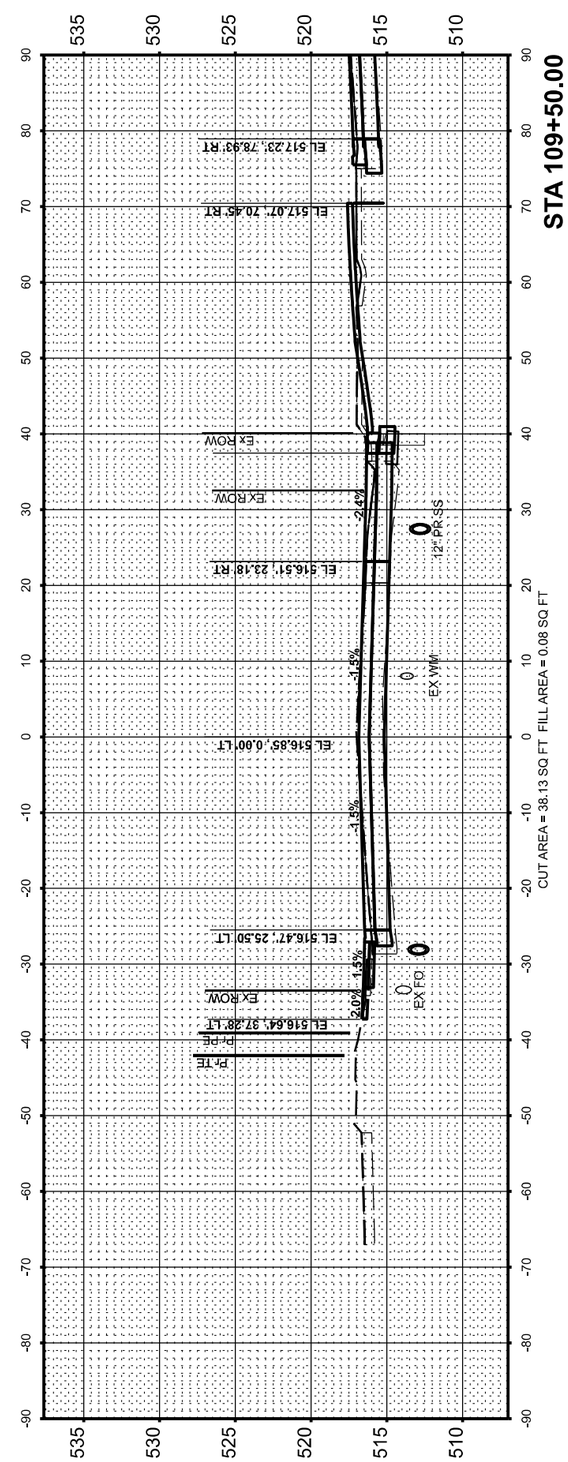

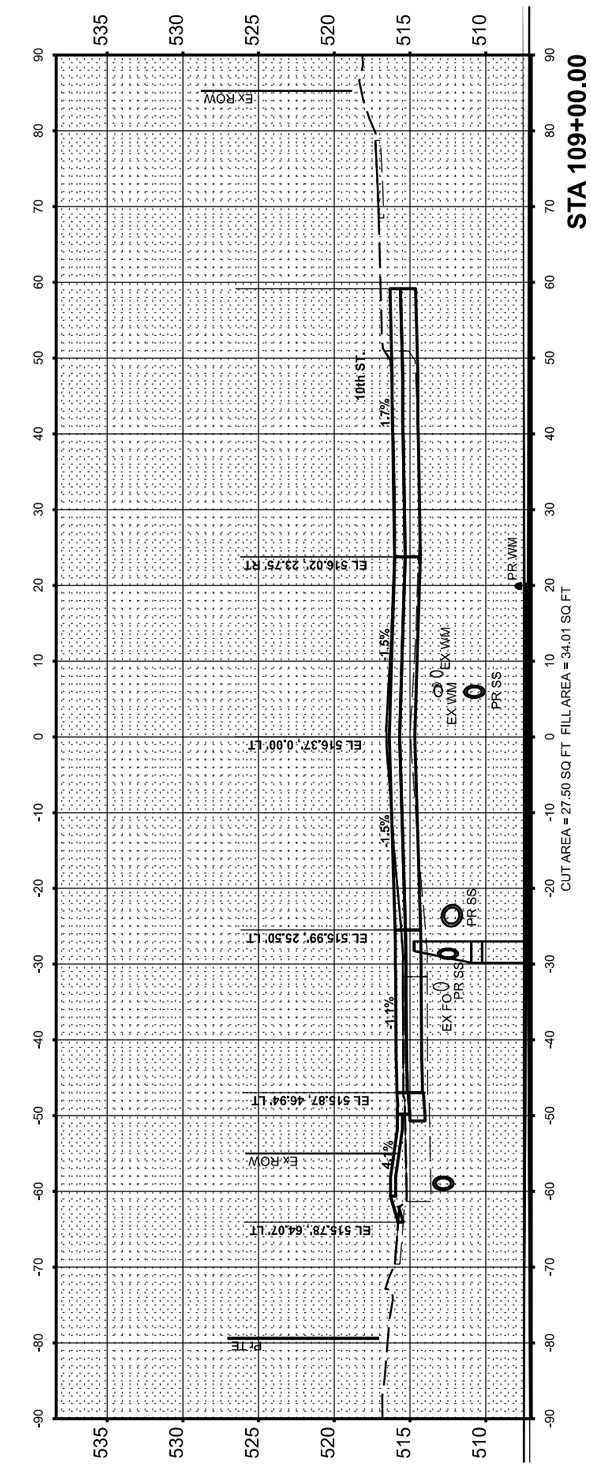

© Copyright Hanson Professional Services Inc. 2025

HANSON
Hanson Professional Services Inc.

FINAL SURVEY		BY	DATE
NOTE BOOK	SURVEYED		
	PLOTTED		
	TEMPLATE		
	AREAS		
NO.	AREAS CHECKED		

ORIGINAL SURVEY		BY	DATE
NOTE BOOK	SURVEYED		
	PLOTTED		
	TEMPLATE		
	AREAS		
NO.	AREAS CHECKED		

DESIGNED	CM	4/30/2024 12:00:00 AM
DRAWN	RLA	4/30/2024 12:00:00 AM
REVIEWED	MGD	10/25/2024 12:00:00 AM

MODEL: AL_CourtSt - 109+00.00 [Sheet]
FILE NAME: I:\13jobs\13L0177A\CAD\Bond\Model\PS3-XS.dgn

Final

USER NAME = ander00846	DESIGNED - SD/JC	REVISED -	
	DRAWN - RA/CL	REVISED -	
PLOT SCALE = 0.16666667 ' / in.	CHECKED - MGD	REVISED -	
PLOT DATE = 3/26/2025	DATE - 10/25/2024 12:00:00 AM	REVISED -	

STATE OF ILLINOIS
DEPARTMENT OF TRANSPORTATION

COURT STREET
CROSS SECTIONS

SCALE: 1" = 10' | SHEET OF SHEETS | STA.

F.A.P. RTE.	SECTION	COUNTY	TOTAL SHEETS	SHEET NO.
693	20-00196-02-RS	TAZEWELL	136	131
	13L0177A	CONTRACT NO. 89859		
	ILLINOIS	FED. AID PROJECT		

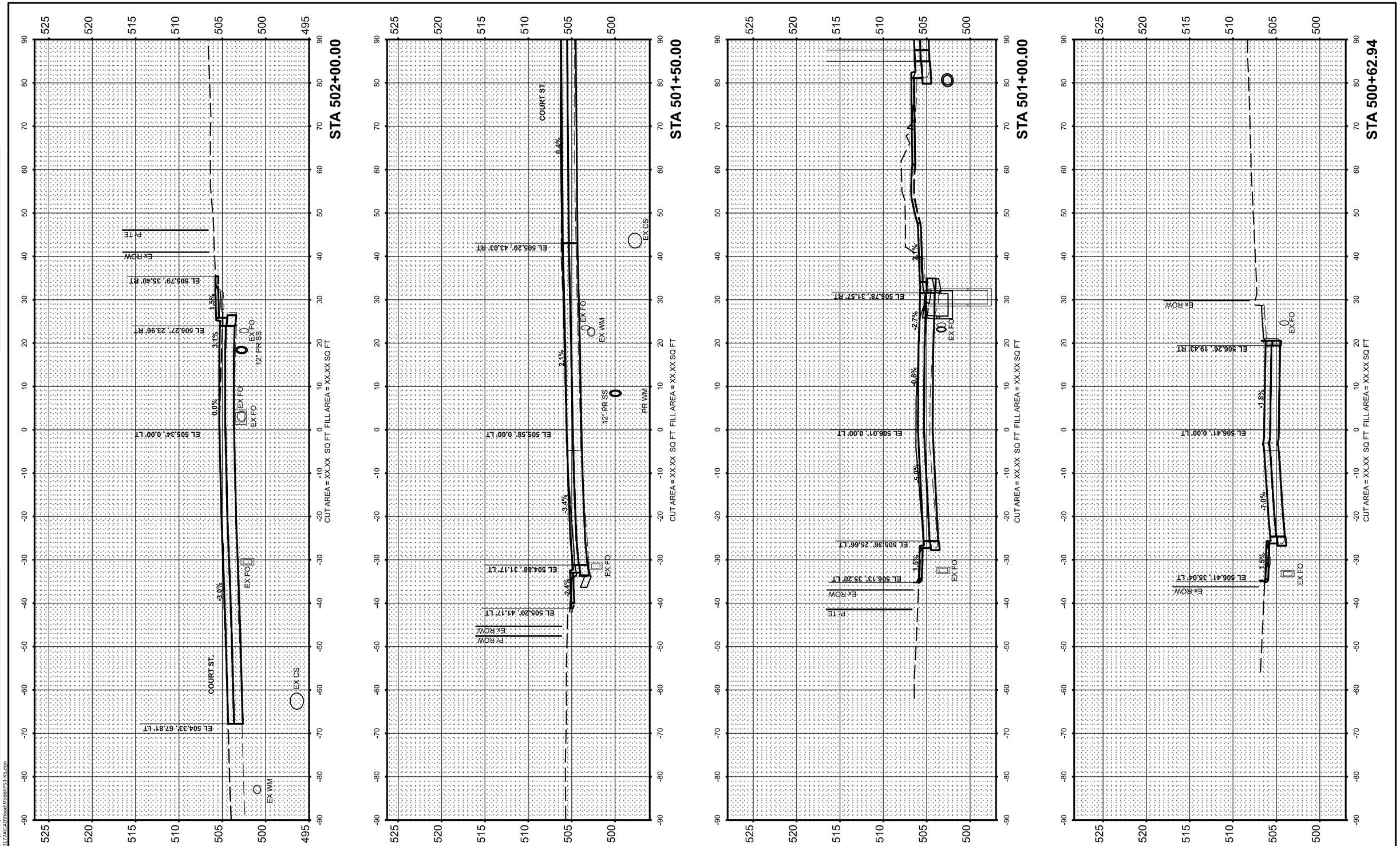

Final

USER NAME = ander00846	DESIGNED - SD/JC	REVISED -	
	DRAWN - RA/CL	REVISED -	
PLOT SCALE = 0.16666667 ' / in.	CHECKED - MGD	REVISED -	
PLOT DATE = 3/26/2025	DATE - 10/25/2024 12:00:00 AM	REVISED -	

STATE OF ILLINOIS
DEPARTMENT OF TRANSPORTATION

8TH STREET
CROSS SECTIONS

SCALE: 1" = 10' | SHEET OF SHEETS | STA.

F.A.P. RTE.	SECTION	COUNTY	TOTAL SHEETS	SHEET NO.
693	20-00196-02-RS	TAZEWELL	136	132
	13L0177A	CONTRACT NO. 89859		
	ILLINOIS	FED. AID PROJECT		

FINAL SURVEY		BY	DATE
NOTE BOOK	SURVEYED		
	PLOTTED		
	TEMPLATE		
	AREAS		
NO.	AREAS CHECKED		

ORIGINAL SURVEY		BY	DATE
NOTE BOOK	SURVEYED		
	PLOTTED		
	TEMPLATE		
	AREAS		
NO.	AREAS CHECKED		

© Copyright Hanson Professional Services Inc. 2025

HANSON
Hanson Professional Services Inc.

DESIGNED	CM	4/30/2024 12:00:00 AM
DRAWN	RLA	4/30/2024 12:00:00 AM
REVIEWED	MGD	10/25/2024 12:00:00 AM

MODEL: AL_8th - 500+62.94 [Sheet]
FILE NAME: I:\13jobs\13L0177A\CAD\Road\Model\PS3-XS.dgn

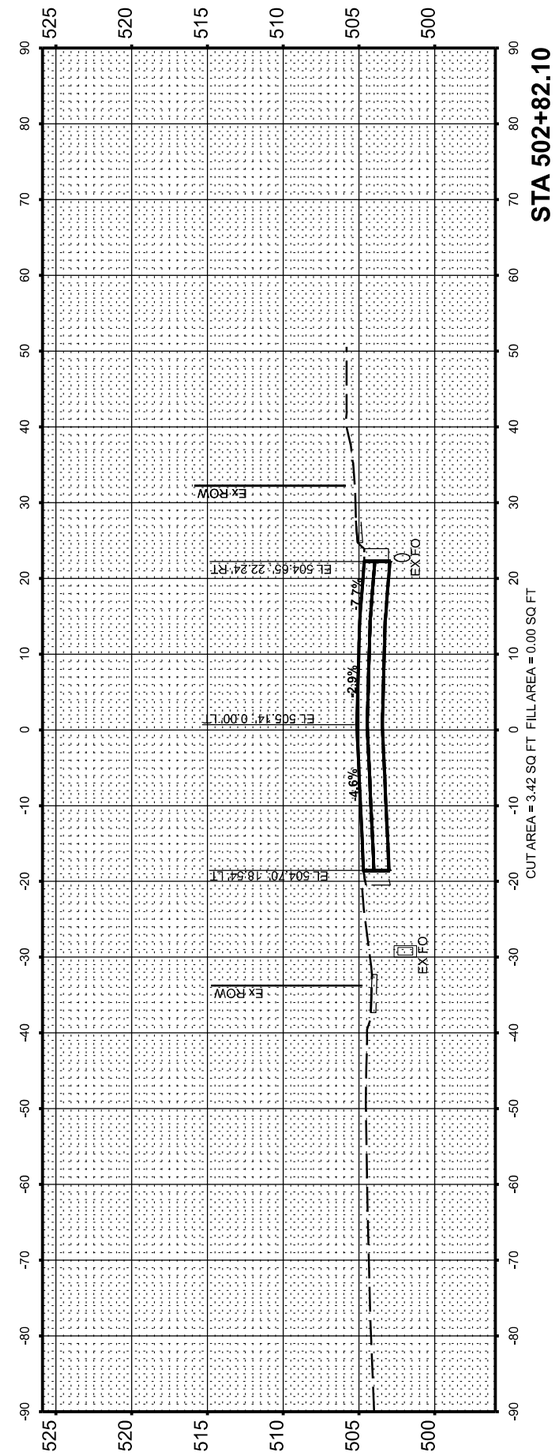

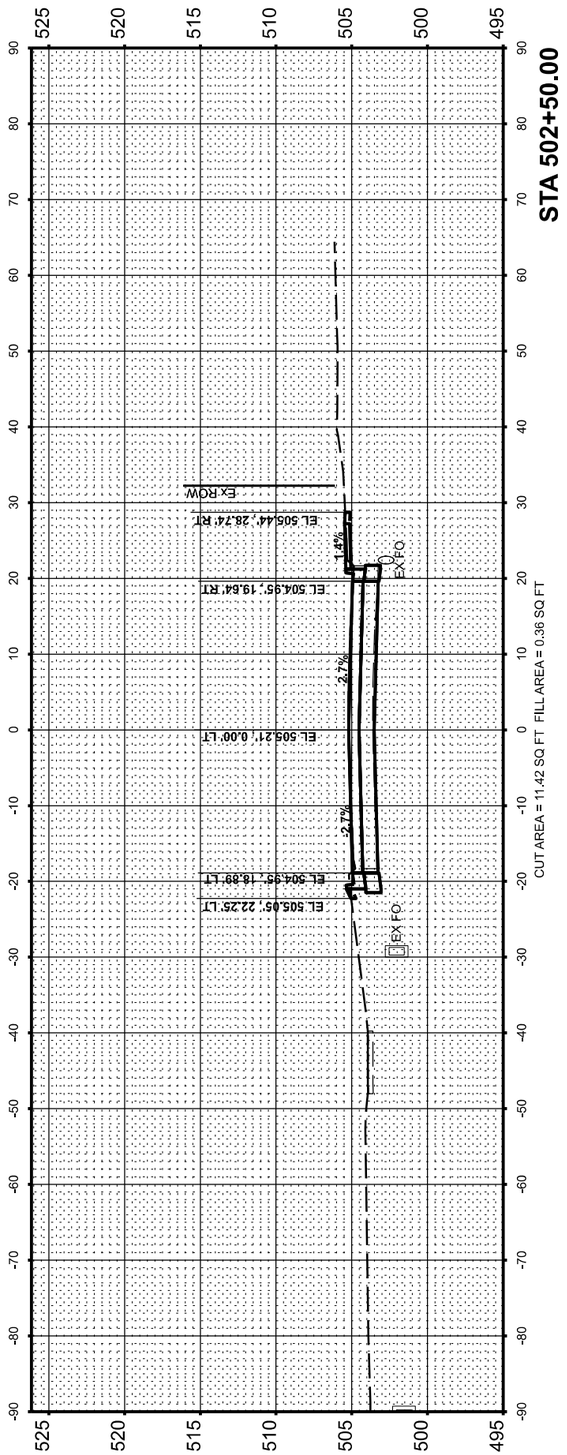

© Copyright Hanson Professional Services Inc. 2025

HANSON
Hanson Professional Services Inc.

FINAL SURVEY		BY	DATE
NOTE BOOK	SURVEYED		
	PLOTTED		
	TEMPLATE		
	AREAS		
NO.	AREAS CHECKED		

ORIGINAL SURVEY		BY	DATE
NOTE BOOK	SURVEYED		
	PLOTTED		
	TEMPLATE		
	AREAS		
NO.	AREAS CHECKED		

DESIGNED	CM	4/30/2024 12:00:00 AM
DRAWN	RLA	4/30/2024 12:00:00 AM
REVIEWED	MGD	10/25/2024 12:00:00 AM

MODEL: AL_8th - 502+50.00 [Sheet]
FILE NAME: I:\13jobs\13L0177A\CAD\Road\Model\PS3-XS.dgn

Final

USER NAME = ander00846	DESIGNED - SD/JC	REVISED -	
	DRAWN - RA/CL	REVISED -	
PLOT SCALE = 0.16666667 ' / in.	CHECKED - MGD	REVISED -	
PLOT DATE = 3/26/2025	DATE - 10/25/2024 12:00:00 AM	REVISED -	

STATE OF ILLINOIS
DEPARTMENT OF TRANSPORTATION

8TH STREET
CROSS SECTIONS

SCALE: 1" = 10' | SHEET OF SHEETS | STA.

F.A.P. RTE.	SECTION	COUNTY	TOTAL SHEETS	SHEET NO.
693	20-00196-02-RS	TAZEWELL	136	133
	13L0177A	CONTRACT NO. 89859		
		ILLINOIS	FED. AID PROJECT	

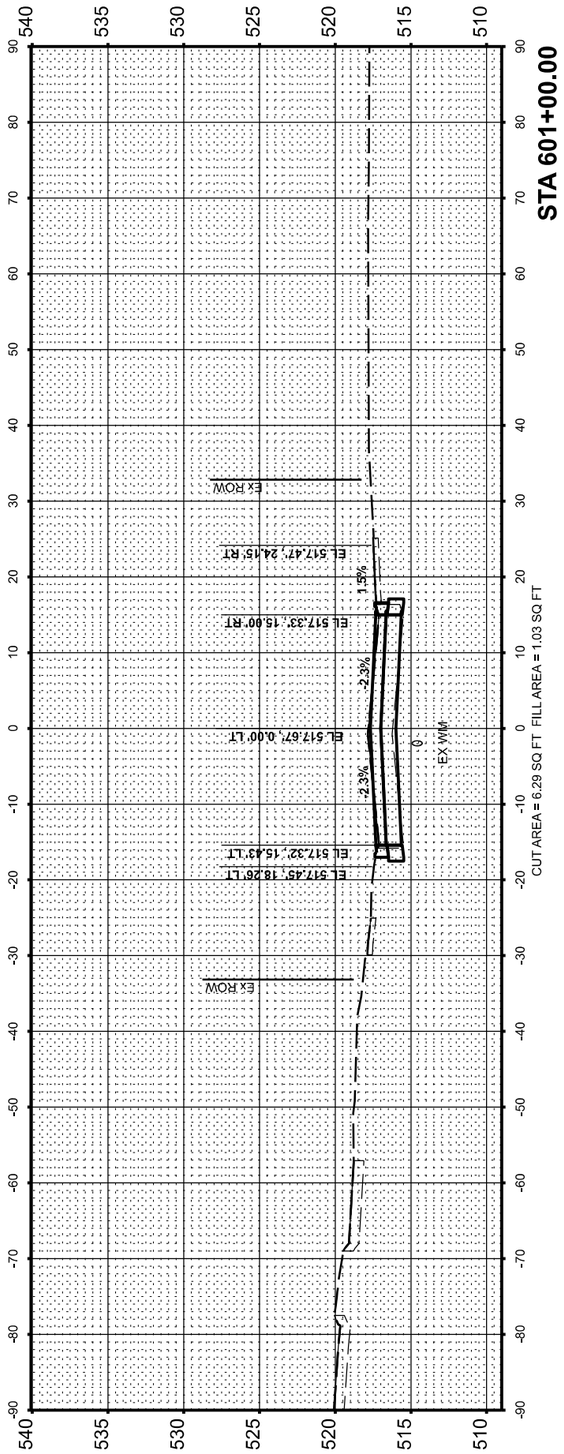

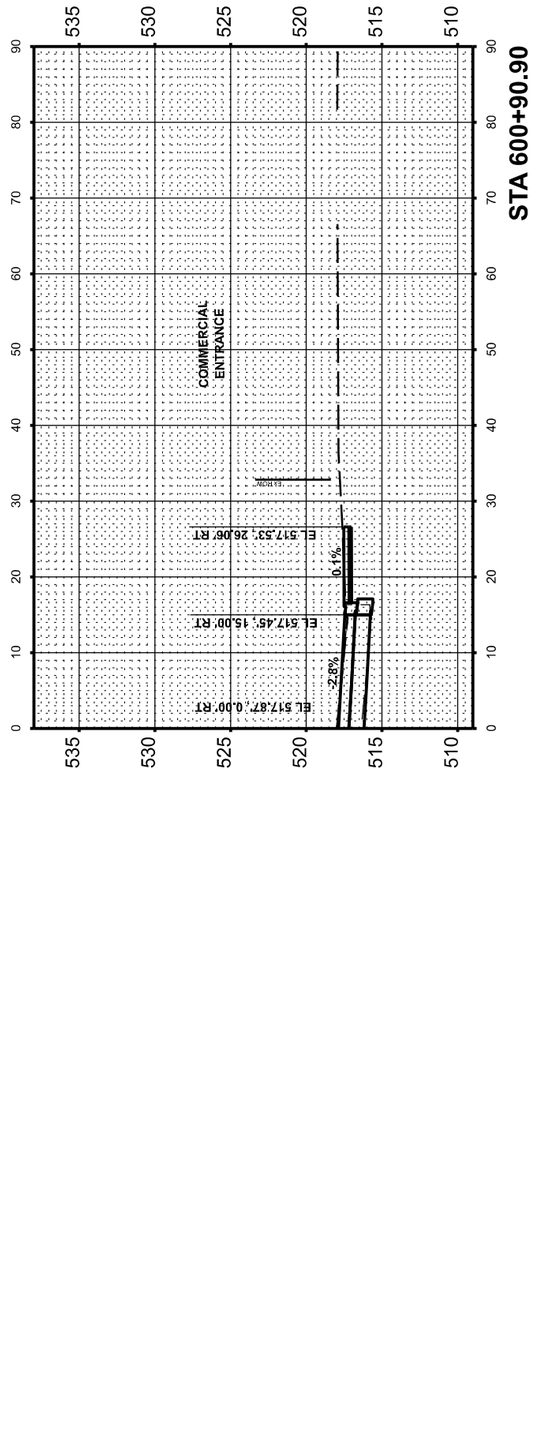

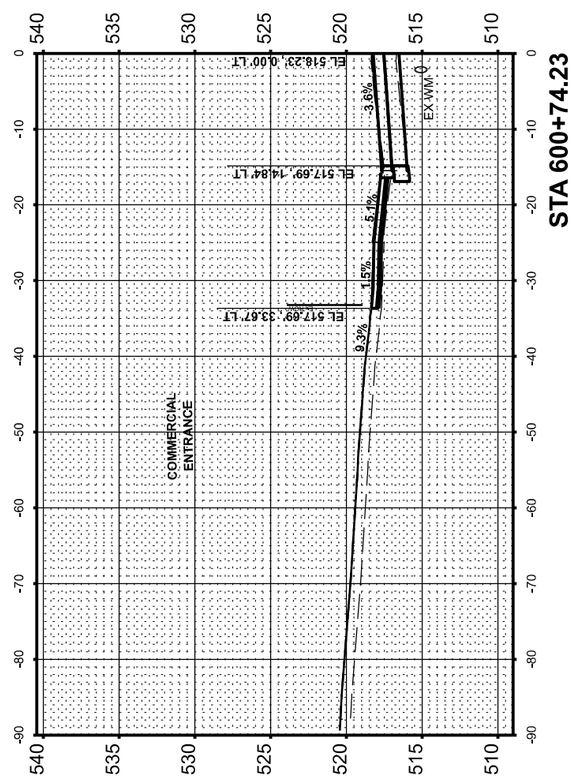

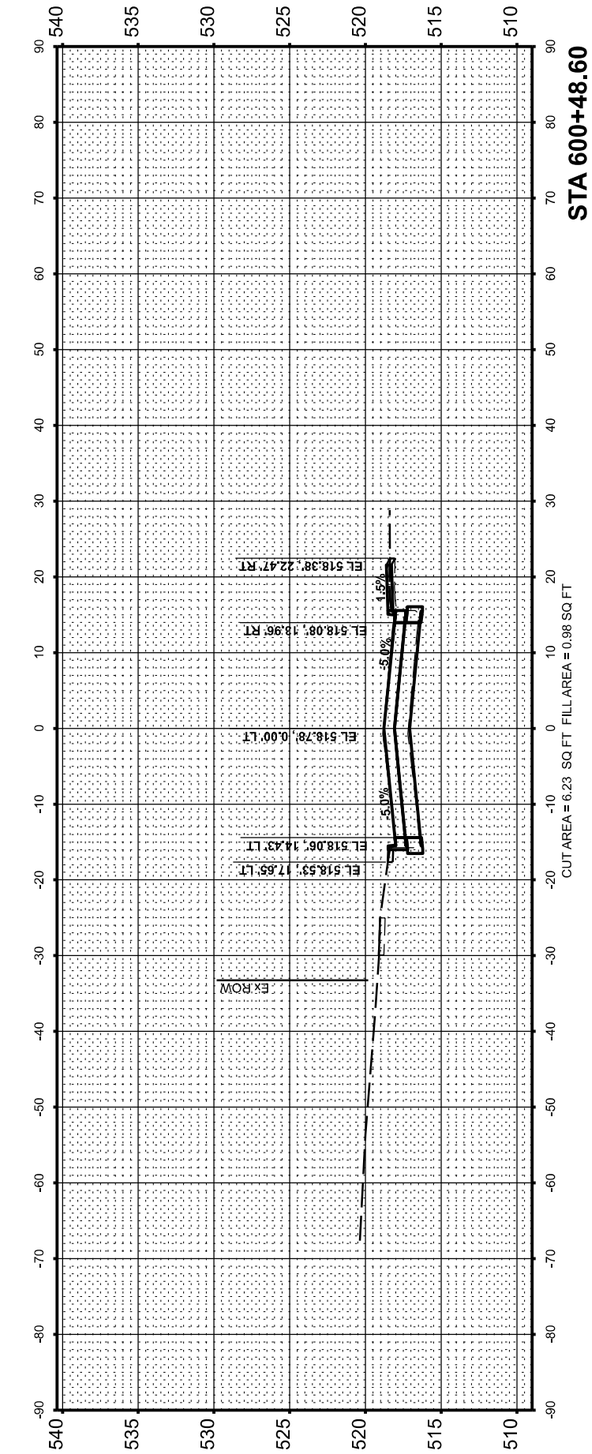

© Copyright Hanson Professional Services Inc. 2025

HANSON
Hanson Professional Services Inc.

FINAL SURVEY		BY	DATE
NOTE BOOK	SURVEYED		
	PLOTTED		
	TEMPLATE		
	AREAS		
NO.	AREAS CHECKED		

ORIGINAL SURVEY		BY	DATE
NOTE BOOK	SURVEYED		
	PLOTTED		
	TEMPLATE		
	AREAS		
NO.	AREAS CHECKED		

DESIGNED CM 4/30/2024 12:00:00 AM
DRAWN RLA 4/30/2024 12:00:00 AM
REVIEWED MGD 10/25/2024 12:00:00 AM

MODEL: AL_10th - 600+48.60 [Sheet]
FILE NAME: t:\13jobs\13L0177A\CAD\Road\Model\PS3-XS.dgn

Final

USER NAME = ander00846	DESIGNED - SD/JC	REVISED -	
	DRAWN - RA/CL	REVISED -	
PLOT SCALE = 0.16666667 ' / in.	CHECKED - MGD	REVISED -	
PLOT DATE = 3/26/2025	DATE - 10/25/2024 12:00:00 AM	REVISED -	

STATE OF ILLINOIS
DEPARTMENT OF TRANSPORTATION

10TH STREET
CROSS SECTIONS

SCALE: 1" = 10' | SHEET OF SHEETS | STA.

F.A.P. RTE.	SECTION	COUNTY	TOTAL SHEETS	SHEET NO.
693	20-00196-02-RS	TAZEWELL	136	134
	13L0177A	CONTRACT NO. 89859		
		ILLINOIS	FED. AID PROJECT	

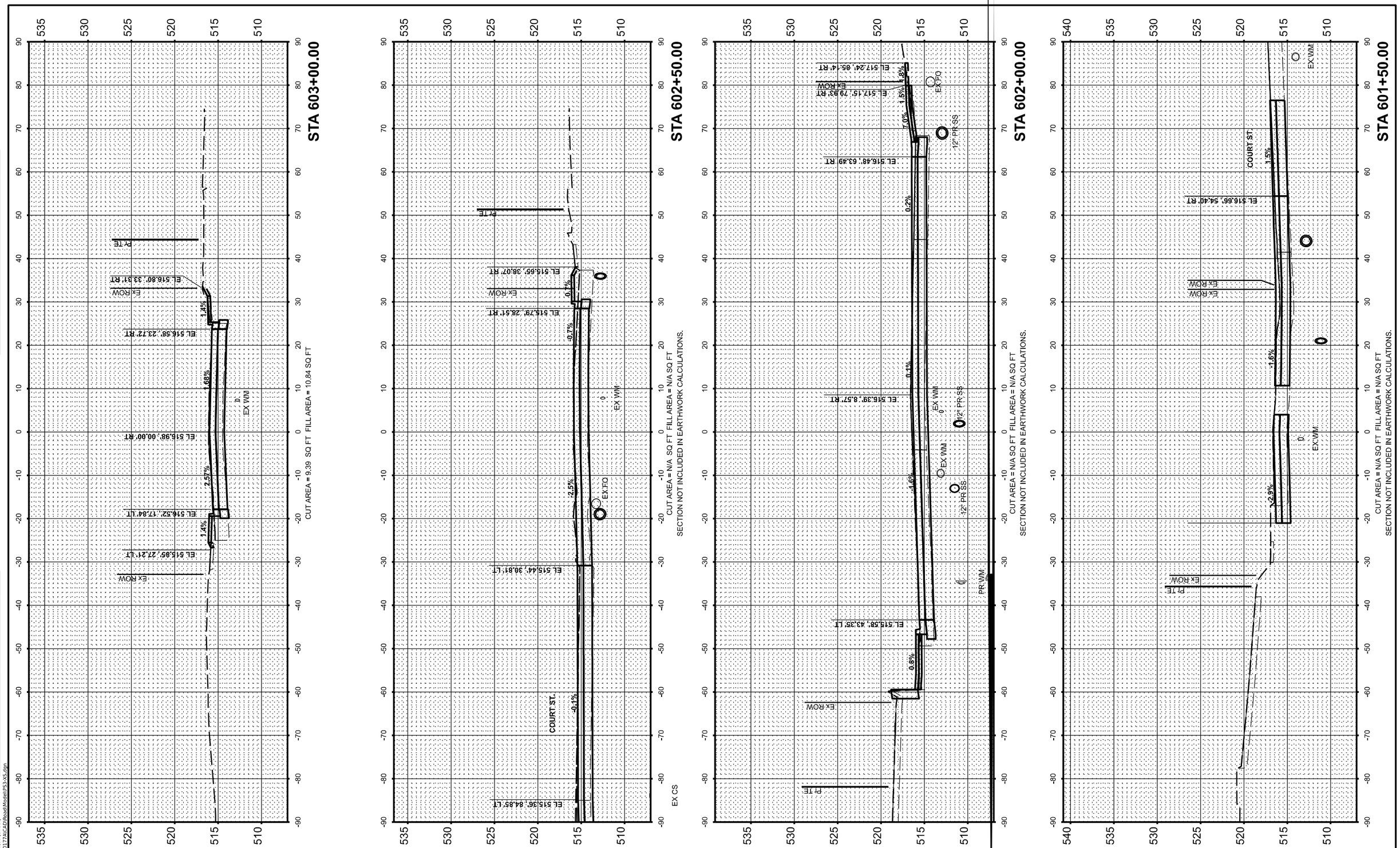

Final	USER NAME = ander00846	DESIGNED - SD/JC	REVISED -	STATE OF ILLINOIS DEPARTMENT OF TRANSPORTATION	10TH STREET CROSS SECTIONS
		DRAWN - RA/CL	REVISED -		
	PLOT SCALE = 0.16666667 ' / in.	CHECKED - MGD	REVISED -		SCALE: 1" = 10' SHEET OF SHEETS STA.
	PLOT DATE = 3/26/2025	DATE - 10/25/2024 12:00:00 AM	REVISED -		

F.A.P. RTE.	SECTION	COUNTY	TOTAL SHEETS	SHEET NO.
693	20-00196-02-RS	TAZEWELL	136	135
	13L0177A	CONTRACT NO. 89859		
	ILLINOIS	FED. AID PROJECT		

DESIGNED	CM	4/30/2024 12:00:00 AM
DRAWN	RLA	4/30/2024 12:00:00 AM
REVIEWED	MGD	10/25/2024 12:00:00 AM

MODEL: AL_10in - 601+50.00 (Sheet)
FILE NAME: I:\13jobs\13L0177A\CAD\Road\Model\PS3-XS.dgn

ORIGINAL SURVEY	BY	DATE
SURVEYED		
PLOTTED		
TEMPLATE		
AREAS		
AREAS CHECKED		

FINAL SURVEY	BY	DATE
SURVEYED		
PLOTTED		
TEMPLATE		
AREAS		
AREAS CHECKED		

NOTE BOOK NO.

© Copyright Hanson Professional Services Inc. 2025

HANSON
Hanson Professional Services Inc.

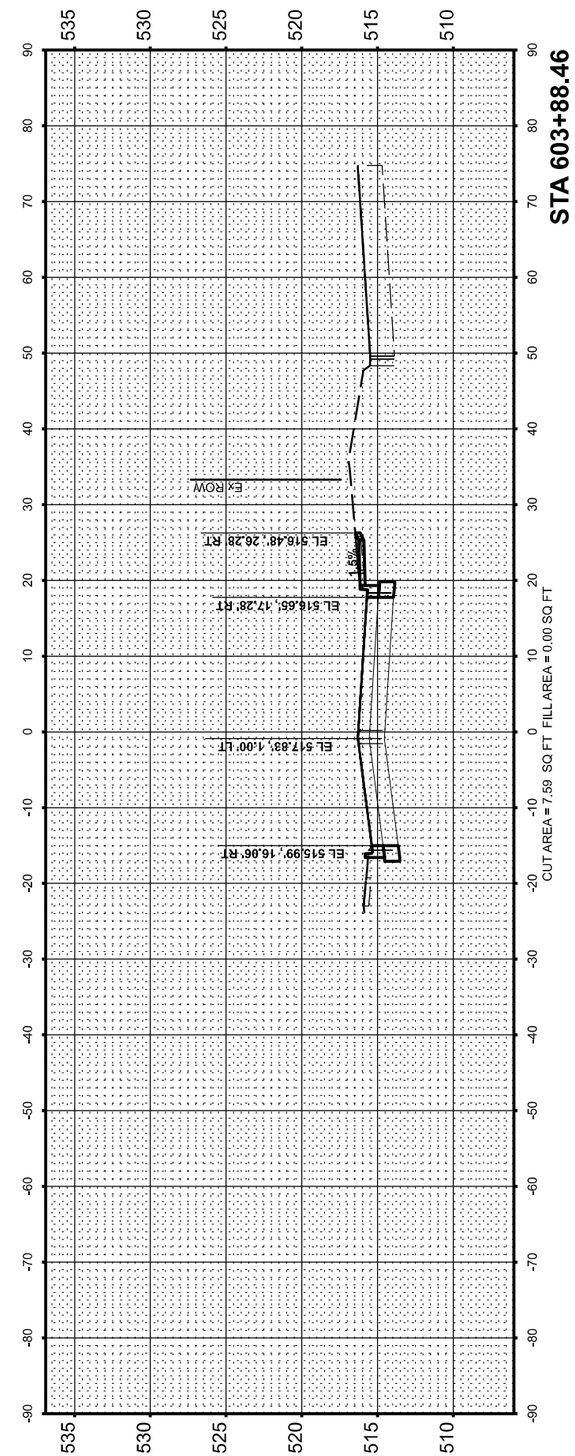

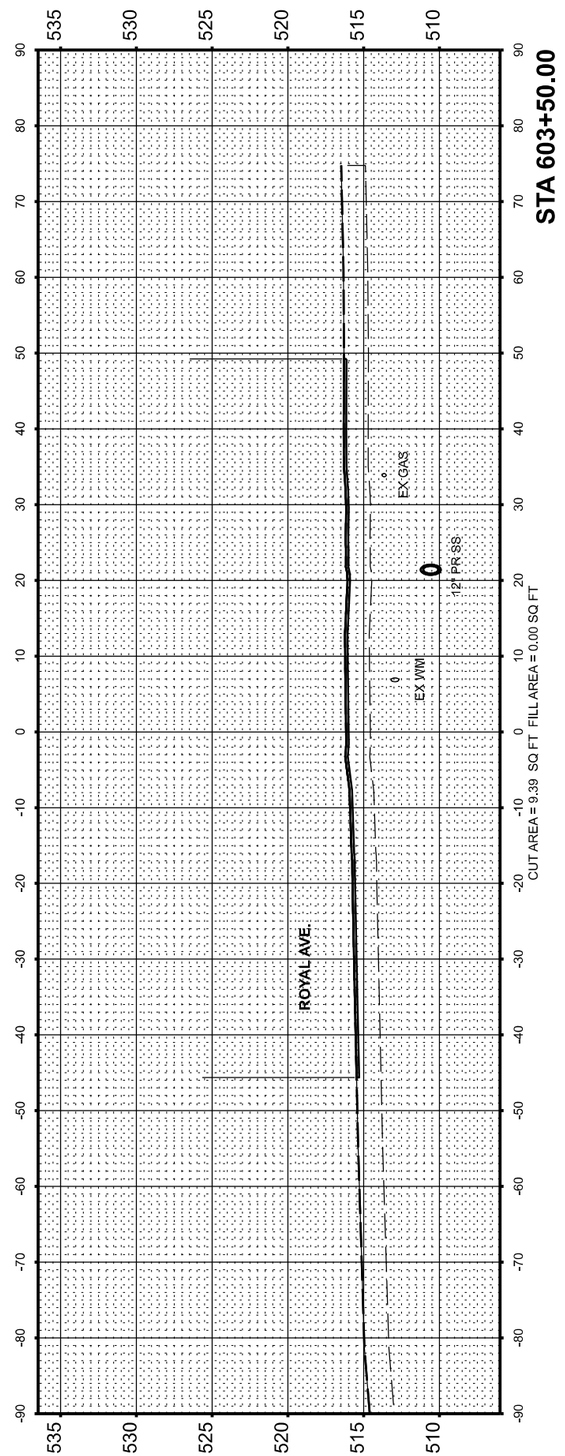

© Copyright Hanson Professional Services Inc. 2025

HANSON
Hanson Professional Services Inc.

FINAL SURVEY		BY	DATE
NOTE BOOK	SURVEYED		
	PLOTTED		
	TEMPLATE		
	AREAS		
NO.	AREAS CHECKED		

ORIGINAL SURVEY		BY	DATE
NOTE BOOK	SURVEYED		
	PLOTTED		
	TEMPLATE		
	AREAS		
NO.	AREAS CHECKED		

DESIGNED	CM	4/30/2024 12:00:00 AM
DRAWN	RLA	4/30/2024 12:00:00 AM
REVIEWED	MGD	10/25/2024 12:00:00 AM

MODEL: AL_10th - 603+50.00 [Sheet]
FILE NAME: I:\13jobs\13L0177A\CAD\Road\Model\PS3-XS.dgn

Final

USER NAME = ander00846	DESIGNED - SD/JC	REVISED -	
	DRAWN - RA/CL	REVISED -	
PLOT SCALE = 0.16666667 ' / in.	CHECKED - MGD	REVISED -	
PLOT DATE = 3/26/2025	DATE - 10/25/2024 12:00:00 AM	REVISED -	

STATE OF ILLINOIS
DEPARTMENT OF TRANSPORTATION

10TH STREET
CROSS SECTIONS

SCALE: 1" = 10' | SHEET OF SHEETS | STA.

F.A.P. RTE.	SECTION	COUNTY	TOTAL SHEETS	SHEET NO.
693	20-00196-02-RS	TAZEWELL	136	136
	13L0177A	CONTRACT NO. 89859		
		ILLINOIS	FED. AID PROJECT	