06-13-2025 LETTING ITEM 088

F.A.P. RTE.	SECTION	COUNTY	TOTAL SHEETS	SHEET NO.
310 & 562	(115BDR, 116SR)RS-5, 124RS-8	MORGAN	69	1
	ILLINOIS	CONTRACT NO. 72263		

INDEX OF SHEETS

STATE OF ILLINOIS
DEPARTMENT OF TRANSPORTATION

PROPOSED HIGHWAY PLANS

FAP ROUTE 310 & 562 (IL 100, IL 104, US 67)
SECTION (115BDR, 116SR)RS-5, 124RS-8
PROJECT NHPP-HSIP-TEFH(581)
DESIGNED OVERLAY, NEW SHOULDERS, BRIDGE DECK OVERLAY, BRIDGE REPAIR
MORGAN COUNTY

D-96-004-23

LOCATION OF SECTION INDICATED THUS: -

ADT: 2910 (2023)
MU: 15.6%
SU: 4.4%
PV: 80.0%

C-96-042-23

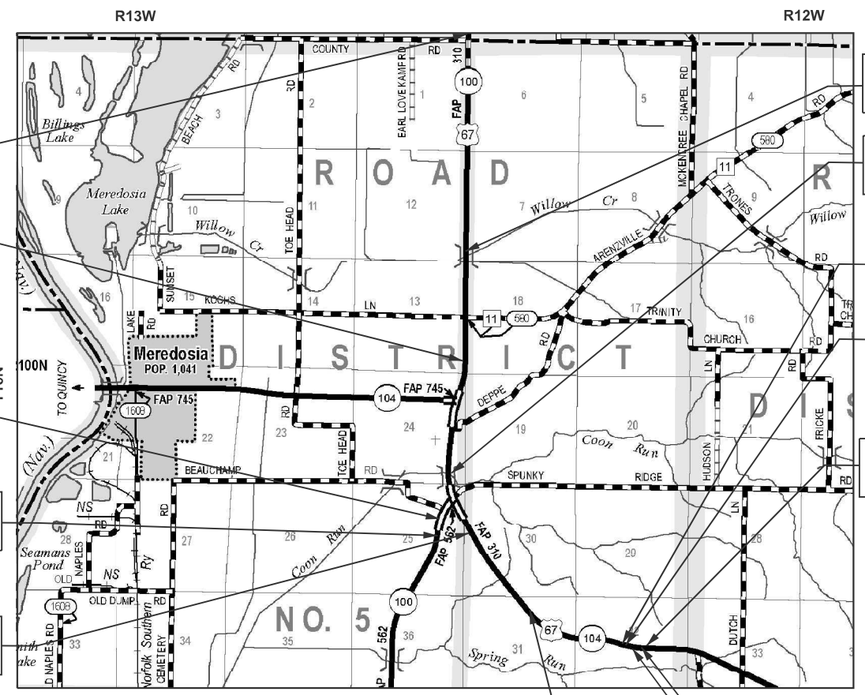

BEGIN PROJECT
STATION 558+00.70

EQN: STA. 709+00.00 BK
=STA. 136+29.00 AH

EQN: STA. 14+51.92 BK
=STA. 21+11.26 AH

STATION 25+00.00
IMPROVEMENT ENDS

EQN: STA. 212+68.65 BK
=STA. 212+99.99 AH

EQN: STA. 271+86.60 BK
=STA. 273+79.67 AH

069–0065
BRIDGE IMPROVEMENT

069–0017
BRIDGE IMPROVEMENT

POT STA 10+85.74 (TRANSC) =
POC STA 312+19.50 (EX67) =

POT STA 17+24.96 (TRANSD) =
PT STA 9+15.75 (TRANSC) =

END PROJECT
STATION 1133+50.00

POT STA 1134+89.60 @ 37.0' RT (P67)
PC STA 0+00.00 (TRANSC)

STA. 1139+91.23 (P67) =
STA. B 318+09.64 (EX67)

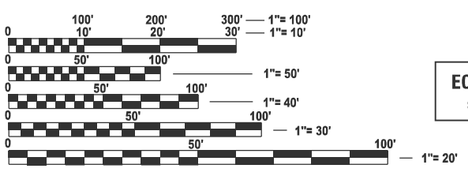

FULL SIZE PLANS HAVE BEEN PREPARED USING STANDARD ENGINEERING SCALES. REDUCED SIZED PLANS WILL NOT CONFORM TO STANDARD SCALES. IN MAKING MEASUREMENTS ON REDUCED PLANS, THE ABOVE SCALES MAY BE USED.

J.U.L.I.E.
JOINT UTILITY LOCATION INFORMATION FOR EXCAVATION
1-800-892-0123
OR 811

STATE OF ILLINOIS
DEPARTMENT OF TRANSPORTATION

SUBMITTED April 3 20 25
REGIONAL ENGINEER

May 9 20 25
ENGINEER OF DESIGN AND ENVIRONMENT

May 9 20 25
DIRECTOR OF HIGHWAYS PROJECT IMPLEMENTATION

PROJECT ENGINEER: JON KELLEY (217)785-2739
PROJECT MANAGER: CARL JOHNSON (217)782-3332

GROSS LENGTH = 35,878.63 FT. = 6.795 MILE
NET LENGTH = 35,878.63 FT. = 6.795 MILE

PRINTED BY THE AUTHORITY OF THE STATE OF ILLINOIS

CONTRACT NO. 72263

REV - MS

GENERAL NOTES

1. REMOVED GUARDRAIL THAT IS NOT REPLACED ON THE SAME DAY MUST BE DELINEATED WITH LIGHTED BARRICADES. LIGHTED BARRICADES SHALL NOT REMAIN FOR MORE THAN 3 CALENDAR DAYS PER LOCATION, NO LOCATION SHALL BE LEFT WITHOUT EITHER LIGHTED BARRICADES OR NEW GUARDRAIL AT ANY TIME.
2. ALL GUARDRAIL SHALL HAVE A PRELIMINARY LAYOUT, GUARDRAIL POSTS SHALL BE ADJUSTED SO AS TO MISS ANY SHOULDER DRAINS, INLETS, PIPE CULVERTS, STORM SEWER OR ANY OTHER HAZARD THAT MAY INTERFERE WITH GUARDRAIL CONSTRUCTION.
3. THE CONTRACTOR SHALL NOTIFY THE DISTRICT 6 BUREAU OF OPERATIONS AT (217) 785-5306 THREE WEEKS PRIOR TO IMPLEMENTING ANY TRAFFIC CONTROL.
4. NO PASSING ZONES ARE TO BE FIELD VERIFIED BY THE RESIDENT ENGINEER. THE RESIDENT SHALL NOTIFY THE DISTRCIT 6 TRAFFIC OPERATIONS ENGINEER (PH: 217-785-5306) IF REVISIONS TO THE PLAN NO PASSING ZONES ARE RECOMMENDED AT LEAST 14 DAYS PRIOR TO THE INTALLATION OF FINAL PERMANENT MARKINGS.

STATE OF ILLINOIS
DEPARTMENT OF TRANSPORTATION
DIVISION OF HIGHWAYS
DISTRICT 6

EXAMINED March 27, 20 25
ENGINEER OF OPERATIONS

EXAMINED March 27, 20 25
ENGINEER OF PROJECT IMPLEMENTATION

EXAMINED March 27, 20 25
ENGINEER OF PROGRAM DEVELOPMENT

HIGHWAY STANDARS

000001-08	STANDARD SYMBOLS, ABBREVIATIONS AND PATTERNS
482001-02	HMA SHOULDER ADJACENT TO FLEXIBLE PAVEMENT
606001-08	CONCRETE CURB TYPE B AND COMBINATION CONCRETE CURB AND GUTTER
606301-04	PC CONCRETE ISLANDS AND MEDIANS
630001-13	STEEL PLATE BEAM GUARDRAIL
630301-09	SHOULDERS WIDENING FOR TYPE 1 (SPECIAL) GUARDRAIL TERMINALS
631011-10	TRAFFIC BARRIER TERMINAL, TYPE 2
631031-18	TRAFFIC BARRIER TERMINAL, TYPE 6
635001-02	DELINEATORS
642006-01	SHOULDER RUBLE STRIPS 8"
701001-02	OFF-RD OPERATIONS, 2L, 2W, MORE THAN 15' AWAY
701006-05	OFF-RD OPERATIONS, 2L, 2W, 15' TO 24" FROM PAVEMENT EDGE
701101-05	OFF-RD OPERATIONS, MULTILANE, 15' TO 24" FROM PAVEMENT EDGE
701106-02	OFF-RD OPERATIONS, MULTILANE, MORE THAN 15' AWAY
701201-05	LANE CLOSURE, 2L, 2W, DAY ONLY, FOR SPEEDS > 45 MPH
701306-04	LANE CLOSURE, 2L, 2W, SLOW MVOING OPERATIONS DAY ONLY, FOR SPEEDS > 45 MPH
701316-14	LANE CLOSURE, 2L, 2W, BRIDGE REPAIR, FOR SPEEDS > 45 MPH
701326-04	LANE CLOSURE, 2L, 2W, PAVEMENT WIDENING, FOR SPEEDS > 45 MPH
701421-08	LANE CLOSURE, MULTILANE, DAY OPERATIONS ONLY, FOR SPEEDS > 45 MPH TO 55 MPH
701701-10	URBAN LANE CLOSURE, MULTILANE INTERSECTION
701901-10	TRAFFIC CONTROL DEVICES
780001-05	TYPICAL PAVEMENT MARKINGS
781001-04	TYPICAL APPLICATIONS RAISED REFLECTIVE PAVEMENT MARKERS
782006-01	GUARDRAIL AND BARRIER WALL REFLECTOR MOUNTING DETAILS

Location(s):	
Mixture Use(s):	HMA Surface Course
PG:	SBS PG 64-28
Design Air Voids:	4.0% @ N50
Mixture Composition:	IL-9.5
Friction Aggregate:	Mix "C"
Mixture Weight:	112 lb/sy*in
Quality Management:	QCP
Sublot Size:	1000 Tons
Material Transfer Device Required:	Yes

Location(s):	
Mixture Use(s):	HMA Binder Course
PG:	PG 64-22
Design Air Voids:	4.0% @ N50
Mixture Composition:	IL-19.0
Friction Aggregate:	N/A
Mixture Weight:	112 lb/sy*in
Quality Management:	QCP
Sublot Size:	1000 Tons
Material Transfer Device Required:	No

Location(s):	
Mixture Use(s):	HMA Shoulders (Top Lift) / Incidental HMA
PG:	PG 64-22
Design Air Voids:	4.0% @ N50
Mixture Composition:	IL-9.5
Friction Aggregate:	Mix "C"
Mixture Weight:	112 lb/sy*in
Quality Management:	QC/QA
Sublot Size:	N/A
Material Transfer Device Required:	No

Location(s):	
Mixture Use(s):	HMA Shoulders (Lower Lifts)
PG:	PG 64-22
Design Air Voids:	4.0% @ N50
Mixture Composition:	IL-19.0
Friction Aggregate:	N/A
Mixture Weight:	112 lb/sy*in
Quality Management:	QC/QA
Sublot Size:	N/A
Material Transfer Device Required:	No

*NOTE: NUCLEAR GAUGE WILL BE USED FOR DENSITY VERIFICATION BY THE ENGINEER ON QC/QA ITEMS

APPLICATION RATES

HMA BINDER COURSE:.....0.056 TONS/SY*INCH
HMA SURFACE COURSE:.....0.056 TONS/SY*INCH
BITUMINOUS TACK COAT (MILLED SURFACE):.....0.05 POUNDS/SQ FT
BITUMINOUS TACK COAT (BETWEEN LIFTS):.....0.025 POUNDS/SQ FT
HMA SHOULDRS:.....0.056 TONS/SY*INCH
AGG SHOULDERS:.....1.60 TONS/CY
NITROGEN FERTILIZER NUTRIENT:.....90 POUNDS/ACRE
PHOSPOROUS FERTILIZER BUTRIENT:.....90 POUNDS/ACRE
POTASSIOUM FERTILIZER NUTRIENT:.....90 POUNDS/ACRE
MULCH, METHOD 2:.....2 TONS/ACRE

COMMITMENTS

NONE

CODE NO.	ITEM	UNIT	TOTAL QUANTITY	6-60130-0000 80% FEDERAL 20% STATE ROADWAY 0005 RURAL	6-60130-0000 80% FEDERAL 20% STATE BRIDGE 0047 069-0017	6-60130-0100 80% FEDERAL 20% STATE BRIDGE 0047 069-0065	6-60130-0200 90% FEDERAL 10% STATE SAFETY 0021 RURAL
25000200	SEEDING, CLASS 2	ACRE	7				7
25000400	NITROGEN FERTILIZER NUTRIENT	POUND	617				617
25000500	PHOSPHORUS FERTILIZER NUTRIENT	POUND	617				617
25000600	POTASSIUM FERTILIZER NUTRIENT	POUND	617				617
25100115	MULCH, METHOD 2	ACRE	7				7
28000305	TEMPORARY DITCH CHECKS	FOOT	60				60
28000500	INLET AND PIPE PROTECTION	EACH	21				21
31101000	SUBBASE GRANULAR MATERIAL, TYPE B	TON	4,729	4,729			
35800100	PREPARATION OF BASE	SQ YD	247	247			
35800200	AGGREGATE BASE REPAIR	TON	20	20			
40200800	AGGREGATE SURFACE COURSE, TYPE B	TON	29	29			
40600290	BITUMINOUS MATERIALS (TACK COAT)	POUND	97,182	94,191			2,991
40600370	LONGITUDINAL JOINT SEALANT	FOOT	37,215	37,215			
40600405	MATERIAL TRANSFER DEVICE	TON	10,689	10,689			

* - INDICATES PAY ITEM REQUIRES A SPECIAL PROVISION

CODE NO.	ITEM	UNIT	TOTAL QUANTITY	6-60130-0000 80% FEDERAL 20% STATE ROADWAY 0005 RURAL	6-60130-0000 80% FEDERAL 20% STATE BRIDGE 0047 069-0017	6-60130-0100 80% FEDERAL 20% STATE BRIDGE 0047 069-0065	6-60130-0200 90% FEDERAL 10% STATE SAFETY 0021 RURAL
40600982	HOT-MIX ASPHALT SURFACE REMOVAL - BUTT JOINT	SQ YD	4,310	4,310			
40603080	HOT-MIX ASPHALT BINDER COURSE, IL-19.0, N50	TON	14,249	14,249			
40604150	POLYMERIZED HOT-MIX ASPHALT SURFACE COURSE, IL-9.5, MIX "C", N50	TON	10,678	10,678			
40800029	BITUMINOUS MATERIALS (TACK COAT)	POUND	798	798			
40800050	INCIDENTAL HOT-MIX ASPHALT SURFACING	TON	305	305			
44000155	HOT-MIX ASPHALT SURFACE REMOVAL, 1 1/2"	SQ YD	135,732	135,732			
44000500	COMBINATION CURB AND GUTTER REMOVAL	FOOT	5,353	5,353			
48102100	AGGREGATE WEDGE SHOULDER, TYPE B	TON	1,234	1,234			
48203023	HOT-MIX ASPHALT SHOULDERS, 6 1/2"	SQ YD	13,125				13,125
48203100	HOT-MIX ASPHALT SHOULDERS	TON	3,661	2,523			1,138
48300300	PORTLAND CEMENT CONCRETE SHOULDERS 8"	SQ YD	50	50			
58700300	CONCRETE SEALER	SQ FT	10		10		
60260100	INLETS TO BE ADJUSTED	EACH	8	8			
60608552	COMBINATION CONCRETE CURB AND GUTTER, TYPE M-4.06	FOOT	5,353	5,353			

* - INDICATES PAY ITEM REQUIRES A SPECIAL PROVISION

MODEL: SOQ-2 [Sheet]
FILE NAME: c:\pw_work\pwidot\carl.johnson@illinois.gov\d0858453\D672263 Sht - SOQ.dgn

USER NAME = carl.johnson	DESIGNED -	REVISED -
	DRAWN -	REVISED -
	CHECKED -	REVISED -
PLOT DATE = 4/3/2025	DATE -	REVISED -

STATE OF ILLINOIS
DEPARTMENT OF TRANSPORTATION

SUMMARY OF QUANTITIES

SCALE: | SHEET 2 OF 6 SHEETS | STA. TO STA.

F.A.P RTE.	SECTION	COUNTY	TOTAL SHEETS	SHEET NO.
*	(1115BDR, 116SR)RS-5, 124RS-8	MORGAN	69	4

CONTRACT NO. 72263

ILLINOIS | FED. AID PROJECT

*US 67 / IL 100 / IL 104

	CODE NO.	ITEM	UNIT	TOTAL QUANTITY	6-60130-0000 80% FEDERAL 20% STATE ROADWAY 0005 RURAL	6-60130-0000 80% FEDERAL 20% STATE BRIDGE 0047 069-0017	6-60130-0100 80% FEDERAL 20% STATE BRIDGE 0047 069-0065	6-60130-0200 90% FEDERAL 10% STATE SAFETY 0021 RURAL
	60618300	CONCRETE MEDIAN SURFACE, 4 INCH	SQ FT	26,600	26,600			
	60624600	CORRUGATED MEDIAN	SQ FT	2,297	2,297			
*	63000001	STEEL PLATE BEAM GUARDRAIL, TYPE A, 6 FOOT POSTS	FOOT	69	69			
*	63100045	TRAFFIC BARRIER TERMINAL, TYPE 2	EACH	2	2			
*	63100167	TRAFFIC BARRIER TERMINAL, TYPE 1 (SPECIAL) TANGENT	EACH	8	8			
	63200310	GUARDRAIL REMOVAL	FOOT	737	737			
	64200108	SHOULDER RUMBLE STRIPS, 8 INCH	FOOT	30,290				30,290
	64300260	IMPACT ATTENUATORS (FULLY REDIRECTIVE, NARROW), TEST LEVEL 3	EACH	2	2			
	67000400	ENGINEER'S FIELD OFFICE, TYPE A	CAL MO	12	11			1
	67100100	MOBILIZATION	L SUM	1	0.8			0.2
	70100100	TRAFFIC CONTROL AND PROTECTION, STANDARD 701316	EACH	1			1	
	70100310	TRAFFIC CONTROL AND PROTECTION, STANDARD 701421	L SUM	1	1			
	70100450	TRAFFIC CONTROL AND PROTECTION, STANDARD 701201	L SUM	1	1			
	70100460	TRAFFIC CONTROL AND PROTECTION, STANDARD 701306	L SUM	1	1			

* SPECIALTY ITEM

* - INDICATES PAY ITEM REQUIRES A SPECIAL PROVISION

MODEL: SOQ-3 [Sheet]
FILE NAME: c:\pw_work\pwidot\carl.johnson@illinois.gov\d0858453\D672263 Sht - SOQ.dgn

USER NAME = carl.johnson	DESIGNED -	REVISED -
	DRAWN -	REVISED -
	CHECKED -	REVISED -
PLOT DATE = 4/3/2025	DATE -	REVISED -

STATE OF ILLINOIS
DEPARTMENT OF TRANSPORTATION

SUMMARY OF QUANTITIES

SCALE: SHEET 3 OF 6 SHEETS STA. TO STA.

F.A.P RTE.	SECTION	COUNTY	TOTAL SHEETS	SHEET NO.
*	(1115BDR, 116SR)RS-5, 124RS-8	MORGAN	69	5

CONTRACT NO. 72263

ILLINOIS FED. AID PROJECT

*US 67 / IL 100 / IL 104

CODE NO.	ITEM	UNIT	TOTAL QUANTITY	6-60130-0000 80% FEDERAL 20% STATE ROADWAY 0005 RURAL	6-60130-0000 80% FEDERAL 20% STATE BRIDGE 0047 069-0017	6-60130-0100 80% FEDERAL 20% STATE BRIDGE 0047 069-0065	6-60130-0200 90% FEDERAL 10% STATE SAFETY 0021 RURAL
70100500	TRAFFIC CONTROL AND PROTECTION, STANDARD 701326	L SUM	1				1
70102635	TRAFFIC CONTROL AND PROTECTION, STANDARD 701701	L SUM	1	1			
70106500	TEMPORARY BRIDGE TRAFFIC SIGNALS	EACH	1			1	
70106700	TEMPORARY RUMBLE STRIPS	EACH	6			6	
70107025	CHANGEABLE MESSAGE SIGN	CAL DA	650	650			
70300100	SHORT TERM PAVEMENT MARKING	FOOT	11,660	11,660			
70300150	SHORT TERM PAVEMENT MARKING REMOVAL	SQ FT	1,296	1,296			
* 72501000	TERMINAL MARKER - DIRECT APPLIED	EACH	8	8			
* 78009000	MODIFIED URETHANE PAVEMENT MARKING - LETTERS AND SYMBOLS	SQ FT	234	234			
* 78009005	MODIFIED URETHANE PAVEMENT MARKING - LINE 5"	FOOT	111,255	111,255			
* 78009006	MODIFIED URETHANE PAVEMENT MARKING - LINE 6"	FOOT	1,217	1,217			
* 78009008	MODIFIED URETHANE PAVEMENT MARKING - LINE 8"	FOOT	698	698			
* 78009012	MODIFIED URETHANE PAVEMENT MARKING - LINE 12"	FOOT	1,717	1,717			
* 78009024	MODIFIED URETHANE PAVEMENT MARKING - LINE 24"	FOOT	103	103			

* SPECIALTY ITEM

* - INDICATES PAY ITEM REQUIRES A SPECIAL PROVISION

MODEL: SOQ-4 [Sheet]
FILE NAME: c:\pw_work\pwidot\carl.johnson@illinois.gov\d0858453\D672263 Sht - SOQ.dgn

USER NAME = carl.johnson	DESIGNED -	REVISED -
	DRAWN -	REVISED -
	CHECKED -	REVISED -
PLOT DATE = 4/3/2025	DATE -	REVISED -

STATE OF ILLINOIS
DEPARTMENT OF TRANSPORTATION

SUMMARY OF QUANTITIES

SCALE: SHEET 4 OF 6 SHEETS STA. TO STA.

F.A.P RTE.	SECTION	COUNTY	TOTAL SHEETS	SHEET NO.
*	(1115BDR, 116SR)RS-5, 124RS-8	MORGAN	69	6

CONTRACT NO. 72263

ILLINOIS FED. AID PROJECT

*US 67 / IL 100 / IL 104

	CODE NO.	ITEM	UNIT	TOTAL QUANTITY	6-60130-0000 80% FEDERAL 20% STATE ROADWAY 0005 RURAL	6-60130-0000 80% FEDERAL 20% STATE BRIDGE 0047 069-0017	6-60130-0100 80% FEDERAL 20% STATE BRIDGE 0047 069-0065	6-60130-0200 90% FEDERAL 10% STATE SAFETY 0021 RURAL
*	78100100	RAISED REFLECTIVE PAVEMENT MARKER	EACH	640	640			
*	78200005	GUARDRAIL REFLECTORS, TYPE A	EACH	23	23			
*	78200020	CURB REFLECTORS	EACH	211	211			
	78300200	RAISED REFLECTIVE PAVEMENT MARKER REMOVAL	EACH	632	632			
	78300201	PAVEMENT MARKING REMOVAL - GRINDING	SQ FT	871	871			
*	X0325748	ACRYLIC COATING	SQ YD	68		68		
*	X0325749	FIBER WRAP	SQ FT	304		304		
*	X2020060	EXCAVATING AND GRADING EXISTING SHOULDER, (SPECIAL)	UNIT	299				299
*	X2020110	GRADING AND SHAPING SHOULDERS	UNIT	299				299
*	X4402020	CONCRETE MEDIAN SURFACE REMOVAL	SQ FT	26,600	26,600			
*	X6060500	CORRUGATED MEDIAN REMOVAL	SQ FT	2,297	2,297			
* *	X6310214	TRAFFIC BARRIER TERMINAL, TYPE 6 (SPECIAL)	EACH	2	2			
*	X6320100	GUARDRAIL REMOVAL (SPECIAL)	FOOT	769	769			
* *	X6330725	STEEL PLATE BEAM GUARDRAIL (SHORT RADIUS)	FOOT	50	50			

* SPECIALTY ITEM

* - INDICATES PAY ITEM REQUIRES A SPECIAL PROVISION

MODEL: SOQ 5 [Sheet]
FILE NAME: c:\pw_work\pwidot\carl.johnson@illinois.gov\d0858453\D672263 Sht - SOQ.dgn

USER NAME = carl.johnson	DESIGNED -	REVISED -	STATE OF ILLINOIS DEPARTMENT OF TRANSPORTATION
	DRAWN -	REVISED -	
	CHECKED -	REVISED -	
PLOT DATE = 4/3/2025	DATE -	REVISED -	

SUMMARY OF QUANTITIES

SCALE: SHEET 5 OF 6 SHEETS STA. TO STA.

F.A.P RTE.	SECTION	COUNTY	TOTAL SHEETS	SHEET NO.
*	(1115BDR, 116SR)RS-5, 124RS-8	MORGAN	69	7

CONTRACT NO. 72263

ILLINOIS FED. AID PROJECT

*US 67 / IL 100 / IL 104

	CODE NO.	ITEM	UNIT	TOTAL QUANTITY	6-60130-0000 80% FEDERAL 20% STATE ROADWAY 0005 RURAL	6-60130-0000 80% FEDERAL 20% STATE BRIDGE 0047 069-0017	6-60130-0100 80% FEDERAL 20% STATE BRIDGE 0047 069-0065	6-60130-0200 90% FEDERAL 10% STATE SAFETY 0021 RURAL
* *	X6331007	REMOVAL AND REPLACEMENT OF STEEL PLATE BEAM GUARDRAIL, RAIL ELEMENT	FOOT	54	54			
*	X7200201	WIDTH RESTRICTION SIGNING	L SUM	1			1	
*	Z0001800	APPROACH SLAB REPAIR (PARTIAL DEPTH)	SQ YD	10			10	
*	Z0012130	BRIDGE DECK SCARIFICATION 3/4"	SQ YD	570			570	
*	Z0012164	BRIDGE DECK MICROSILICA CONCRETE OVERLAY 2 1/2"	SQ YD	570			570	
*	Z0012754	STRUCTURAL REPAIR OF CONCRETE (DEPTH EQUAL TO OR LESS THAN 5 INCHES)	SQ FT	10		10		
*	Z0013798	CONSTRUCTION LAYOUT	L SUM	1	1			
*	Z0016001	DECK SLAB REPAIR (FULL DEPTH, TYPE I)	SQ YD	5			5	
*	Z0041895	POLYMER CONCRETE	CU FT	3			3	
*	Z0043800	PRECAST PRESTRESSED CONCRETE I-BEAM REPAIR	SQ FT	38		38		
Ø	Z0076600	TRAINEES	HOUR	2500	2500			
Ø	Z0076604	TRAINEES TRAINING PROGRAM GRADUATE	HOUR	2500	2500			

* SPECIALTY ITEM

Ø 0042

* - INDICATES PAY ITEM REQUIRES A SPECIAL PROVISION

REV - MS

MODEL: SOQ 6 [Sheet]
FILE NAME: c:\pw_work\pwidot\carl.johnson@illinois.gov\d0858453\D672263 Sht - SOQ.dgn

USER NAME = carl.johnson	DESIGNED -	REVISED -	
	DRAWN -	REVISED -	
	CHECKED -	REVISED -	
PLOT DATE = 4/3/2025	DATE -	REVISED -	

STATE OF ILLINOIS
DEPARTMENT OF TRANSPORTATION

SUMMARY OF QUANTITIES

SCALE: SHEET 6 OF 6 SHEETS STA. TO STA.

F.A.P RTE.	SECTION	COUNTY	TOTAL SHEETS	SHEET NO.
*	(1115BDR, 116SR)RS-5, 124RS-8	MORGAN	69	8

CONTRACT NO. 72263

ILLINOIS FED. AID PROJECT

*US 67 / IL 100 / IL 104

LEGEND

1. EXISTING P.C.C. PAVEMENT, 9"-6"-9"
2. EXISTING P.C.C. BASE COURSE, 8"
3. EXISTING P.C.C. PAVEMENT, 8" WITH REINFORCEMENT
4. EXISTING P.C.C. PAVEMENT, 10"
5. EXISTING P.C.C. WIDENING
6. EXISTING P.C.C. SHOULDERS, 10"
7. EXISTING BITUMINOUS CONCRETE, 7.5"
8. EXISTING BITUMINOUS CONCRETE BASE COURSE,10"
9. EXISTING BITUMINOUS SHOULDER SUPERPAVE, 2.25"
10. EXISTING BITUMINOUS SHOULDER, 6"
11. EXISTING BITUMINOUS SHOULDER, 8"
12. POLYMERIZED STON MATRIX ASPHALT, SUPERPAVE, 1.5"
13. EXISTING HMA SHOULDER, 10.25"
14. EXISTING HMA SHOULDER, 10.5"
15. EXISTING AGGREGATE SHOULDER
16. EXISTING STABALIZED SUB-BASE
17. EXISTING SUB-BASE GRANULAR MATERIAL
18. EXISTING SUB-BASE GRANULAR MATERIAL, 4"
19. EXISTING SMOOTH BAR, 3/4"
20. EXISTING TIE BAR, 1/2"
21. EXISTING P.C.C. MEDIAN SURFACE, 4"
22. EXISTING CORRUGATED P.C. CONCRETE MEDIAN
23. EXISTING BAM SHOULDER, 2.5"
24. EXISISTING UNDERDRAINS, 6"

- (A) PR HMA SURFACE REMOVAL, 1.5"
- (B) PR POLYMERIZED HMA SURFACE COURSE, MIX C, N50, 1.5"
- (C) PR HMA BINDER COURSE, N50, 2.25"
- (D) PR HMA SHOULDERS, 1.5"
- (E) PR HMA SHOULDERS, 6.5"
- (F) PR AGGREGATE WEDGE SHOULDER, TYPE B
- (G) PR CONC MEDIAN SURFACE REMOVAL
- (H) PR COMBINATION CURB AND GUTTER REMOVAL
- (I) PR COMBINATION CURB AND GUTTER, TYPE M6.06
- (J) PR CONC MEDIAN SURFACE, 4 INCH
- (K) PR EXCAVATING AND GRADING EXISTING SHOULDER (SPECIAL)
- (L) PR CORRUGATED MEDIAN REMOVAL
- (M) PR CORRUGATED MEDIAN
- (N) PR GRADING AND SHAPING SHOULDER
- (O) PR SUBBASE GRANULAR MATERIAL, TYPE B

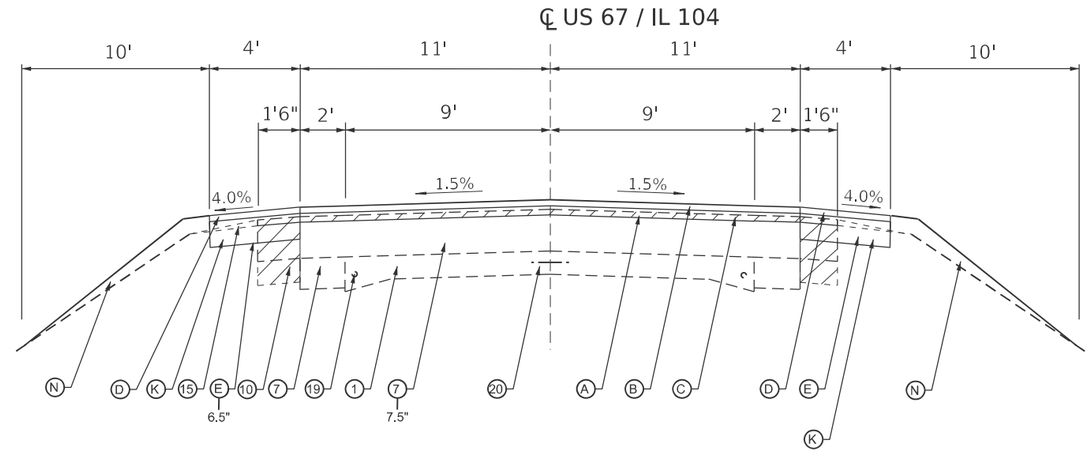

TYPICAL SECTION

STA. 558+00.7 TO STA. 658+49.13

NOTE:
SHOULDER IMPROVEMENT ENDS AT STA 559+26.6

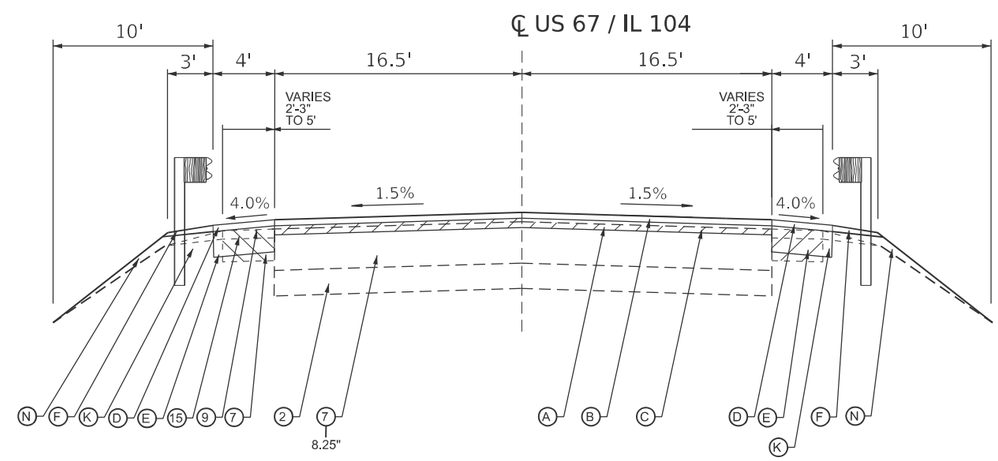

TYPICAL SECTION

STA. 658+49.13 TO STA. 660+88.96
GUARDRAIL LOCATIONS:
RT STA. 659+00.00 TO RT STA. 660+19.35
RT STA. 660+56.01 TO STA. 660+88.96
LT STA. 659+65.66 TO STA. 660+88.96

MODEL: Page 28 [Sheet]
FILE NAME: c:\pw_work\pwidot\carl.johnson@illinois.gov\d0858453\D672263 Sht - Typicals.dgn

USER NAME = carl.johnson	DESIGNED -	REVISED -	
	DRAWN -	REVISED -	
	CHECKED -	REVISED -	
PLOT DATE = 4/3/2025	DATE -	REVISED -	

STATE OF ILLINOIS
DEPARTMENT OF TRANSPORTATION

TYPICAL SECTIONS

SCALE: SHEET 1 OF 15 SHEETS STA. TO STA.

F.A.P RTE.	SECTION	COUNTY	TOTAL SHEETS	SHEET NO.
*	(1115BDR, 116SR)RS-5, 124RS-8	MORGAN	69	9
		CONTRACT NO. 72263		
	ILLINOIS	FED. AID PROJECT		

*US 67 / IL 100 / IL 104

LEGEND

1. EXISTING P.C.C. PAVEMENT, 9"-6"-9"
2. EXISTING P.C.C. BASE COURSE, 8"
3. EXISTING P.C.C. PAVEMENT, 8" WITH REINFORCEMENT
4. EXISTING P.C.C. PAVEMENT, 10"
5. EXISTING P.C.C. WIDENING
6. EXISTING P.C.C. SHOULDERS, 10"
7. EXISTING BITUMINOUS CONCRETE
8. EXISTING BITUMINOUS CONCRETE BASE COURSE,10"
9. EXISTING BITUMINOUS SHOULDER SUPERPAVE, 2.25"
10. EXISTING BITUMINOUS SHOULDER, 6"
11. EXISTING BITUMINOUS SHOULDER, 8"
12. POLYMERIZED STON MATRIX ASPHALT, SUPERPAVE, 1.5"
13. EXISTING HMA SHOULDER, 10.25"
14. EXISTING HMA SHOULDER, 10.5"
15. EXISTING AGGREGATE SHOULDER
16. EXISTING STABALIZED SUB-BASE
17. EXISTING SUB-BASE GRANULAR MATERIAL
18. EXISTING SUB-BASE GRANULAR MATERIAL, 4"
19. EXISTING SMOOTH BAR, 3/4"
20. EXISTING TIE BAR, 1/2"
21. EXISTING P.C.C. MEDIAN SURFACE, 4"
22. EXISTING CORRUGATED P.C. CONCRETE MEDIAN
23. EXISTING BAM SHOULDER, 2.5"
24. EXISISTING UNDERDRAINS, 6"

- A PR HMA SURFACE REMOVAL, 1.5"
- B PR POLYMERIZED HMA SURFACE COURSE, MIX C, N50, 1.5"
- C PR HMA BINDER COURSE, N50, 2.25"
- D PR HMA SHOULDER TOP LIFT, N50, 1.5"
- E PR HMA SHOULDER LOWER LIFT, N50
- F PR AGGREGATE WEDGE SHOULDER, TYPE B
- G PR CONCRETE MEDIAN SURFACE REMOVAL
- H PR COMBINATION CURB AND GUTTER REMOVAL
- I PR COMBINATION CURB AND GUTTER, TYPE M6.06
- J PR CONCRETE MEDIAN SURFACE, 4"
- K PR EXCAVATING AND GRADING EXISTING SHOULDER (SPECIAL)
- L PR CORRUGATED MEDIAN REMOVAL
- M PR CORRUGATED MEDIAN
- N PR GRADING AND SHAPING SHOULDER
- O PR SUBBASE GRANULAR MATERIAL, TYPE B

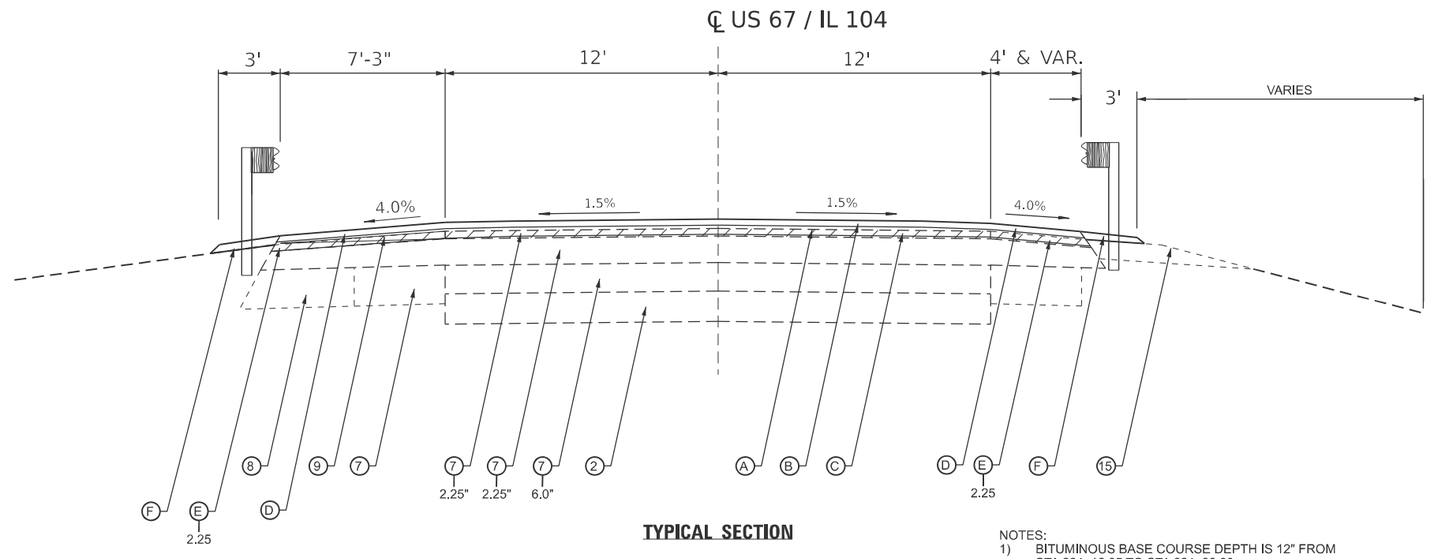

TYPICAL SECTION

STA. 662+50.10 TO STA. 664+97.37
GUARDRAIL LOCATIONS:
LT STA. 662+50.10 TO STA. 662+60.22
RT STA. 662+50.10 TO STA. 663+24.54
LT STA. 662+73.64 TO STA. 663+86.47
RT STA. 663+53.29 TO STA. 664+97.37
LT STA. 664+15.27 TO STA. 664+88.09

NOTES:
1) BITUMINOUS BASE COURSE DEPTH IS 12" FROM STA 664+16.05 TO STA 664+88.80.
2) BITUMINIOUS CONCRETE BASE COURSE WIDENING, SUPERPAVE 10" USED FROM STA 662+79.88 TO STA 666+22.47

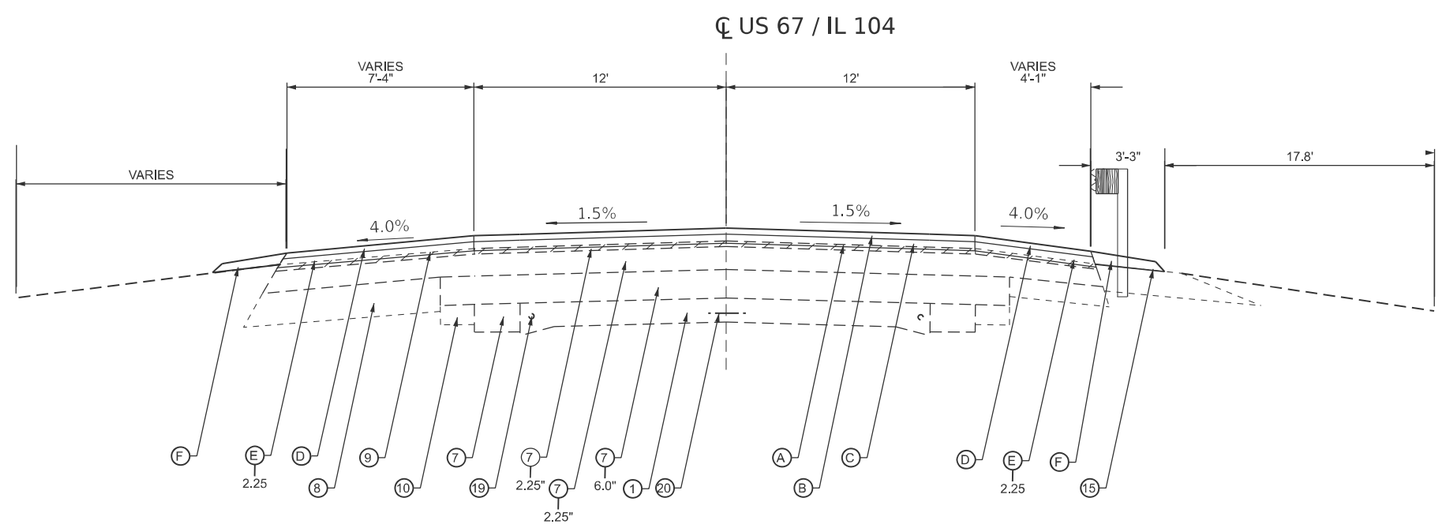

TYPICAL SECTION

STA. 664+97.37 TO STA. 666+00.00
GUARDRAIL LOCATIONS:
RT STA. 664+97.37 TO STA. 665+14.78

NOTE:
BITUMINIOUS CONCRETE BASE COURSE WIDENING, SUPERPAVE 10" USED FROM STA 662+79.88 TO STA 666+22.47

MODEL: Page 29 [Sheet]
FILE NAME: c:\pw_work\pwidot\carl.johnson@illinois.gov\d0858453\D672263 Sht - Typicals.dgn

USER NAME = carl.johnson	DESIGNED -	REVISED -	
	DRAWN -	REVISED -	
	CHECKED -	REVISED -	
PLOT DATE = 4/3/2025	DATE -	REVISED -	

STATE OF ILLINOIS
DEPARTMENT OF TRANSPORTATION

TYPICAL SECTIONS

SCALE: | SHEET 2 OF 15 SHEETS | STA. | TO STA.

F.A.P RTE.	SECTION	COUNTY	TOTAL SHEETS	SHEET NO.
*	(1115BDR, 116SR)RS-5, 124RS-8	MORGAN	69	10

CONTRACT NO. 72263

ILLINOIS | FED. AID PROJECT

*US 67 / IL 100 / IL 104

LEGEND

1. EXISTING P.C.C. PAVEMENT, 9"-6"-9"
2. EXISTING P.C.C. BASE COURSE, 8"
3. EXISTING P.C.C. PAVEMENT, 8" WITH REINFORCEMENT
4. EXISTING P.C.C. PAVEMENT, 10"
5. EXISTING P.C.C. WIDENING
6. EXISTING P.C.C. SHOULDERS, 10"
7. EXISTING BITUMINOUS CONCRETE
8. EXISTING BITUMINOUS CONCRETE BASE COURSE,10"
9. EXISTING BITUMINOUS SHOULDER SUPERPAVE, 2.25"
10. EXISTING BITUMINOUS SHOULDER, 6"
11. EXISTING BITUMINOUS SHOULDER, 8"
12. POLYMERIZED STON MATRIX ASPHALT, SUPERPAVE, 1.5"
13. EXISTING HMA SHOULDER, 10.25"
14. EXISTING HMA SHOULDER, 10.5"
15. EXISTING AGGREGATE SHOULDER
16. EXISTING STABALIZED SUB-BASE
17. EXISTING SUB-BASE GRANULAR MATERIAL
18. EXISTING SUB-BASE GRANULAR MATERIAL, 4"
19. EXISTING SMOOTH BAR, 3/4"
20. EXISTING TIE BAR, 1/2"
21. EXISTING P.C.C. MEDIAN SURFACE, 4"
22. EXISTING CORRUGATED P.C. CONCRETE MEDIAN
23. EXISTING BAM SHOULDER, 2.5"
24. EXISITING UNDERDRAINS, 6"

- (A) PR HMA SURFACE REMOVAL, 1.5"
- (B) PR POLYMERIZED HMA SURFACE COURSE, MIX C, N50, 1.5"
- (C) PR HMA BINDER COURSE, N50, 2.25"
- (D) PR HMA SHOULDER TOP LIFT, N50, 1.5"
- (E) PR HMA SHOULDER LOWER LIFT, N50
- (F) PR AGGREGATE WEDGE SHOULDER, TYPE B
- (G) PR CONCRETE MEDIAN SURFACE REMOVAL
- (H) PR COMBINATION CURB AND GUTTER REMOVAL
- (I) PR COMBINATION CURB AND GUTTER, TYPE M6.06
- (J) PR CONCRETE MEDIAN SURFACE, 4"
- (K) PR EXCAVATING AND GRADING EXISTING SHOULDER (SPECIAL)
- (L) PR CORRUGATED MEDIAN REMOVAL
- (M) PR CORRUGATED MEDIAN
- (N) PR GRADING AND SHAPING SHOULDER
- (O) PR SUBBASE GRANULAR MATERIAL, TYPE B

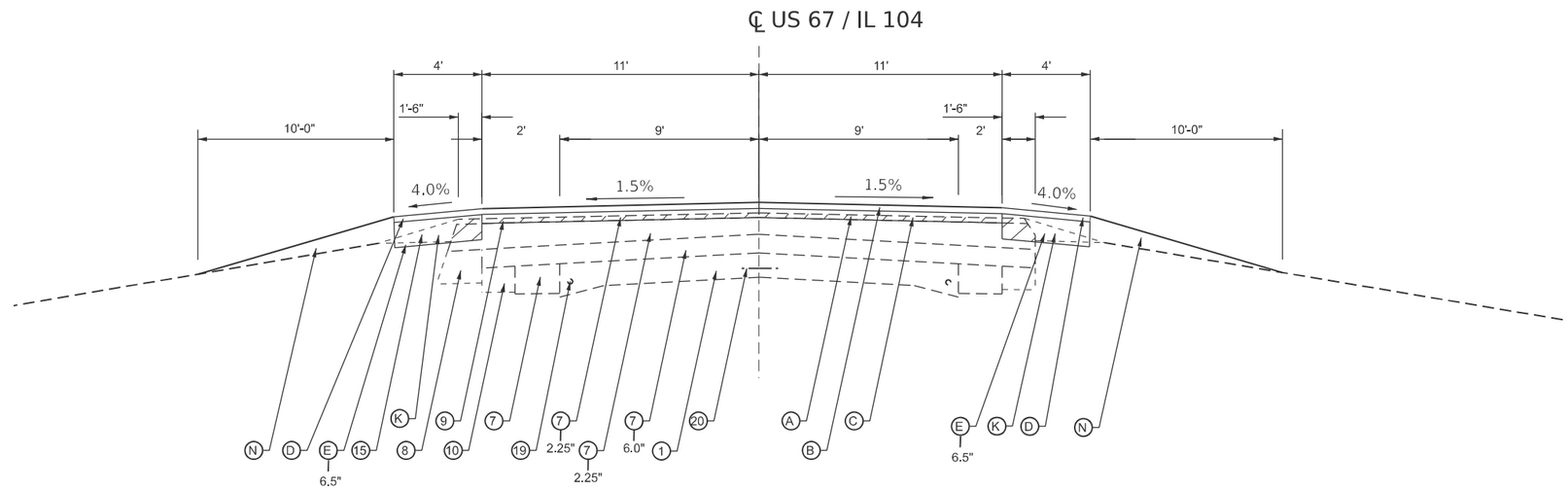

TYPICAL SECTION

STA. 666+00.00 TO STA. 667+00.00

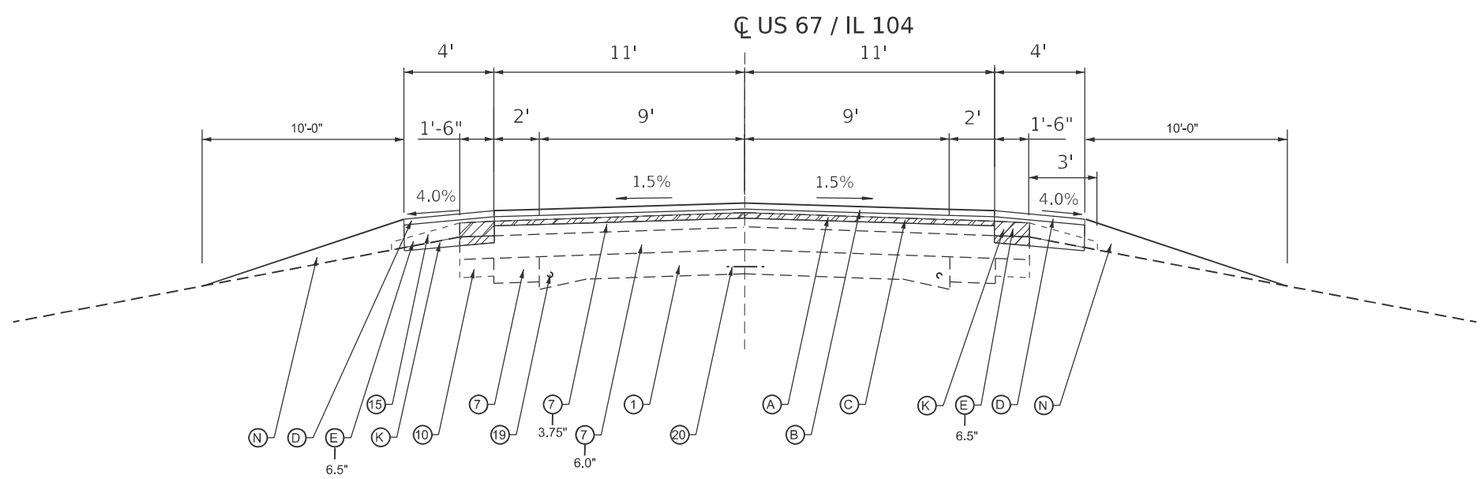

TYPICAL SECTION

STA. 667+00.00 TO STA. 709+93.60
EQN: STA. 709+93.60 BK = STA. 136+29.00 AH

MODEL: Page 30 [Sheet]
FILE NAME: c:\pw_work\pwidot\carl.johnson@illinois.gov\d0858453\D672263 Sht - Typicals.dgn

USER NAME = carl.johnson	DESIGNED -	REVISED -	
	DRAWN -	REVISED -	
	CHECKED -	REVISED -	
PLOT DATE = 4/3/2025	DATE -	REVISED -	

STATE OF ILLINOIS
DEPARTMENT OF TRANSPORTATION

TYPICAL SECTIONS

SCALE: SHEET 3 OF 15 SHEETS STA. TO STA.

F.A.P RTE.	SECTION	COUNTY	TOTAL SHEETS	SHEET NO.
*	(1115BDR, 116SR)RS-5, 124RS-8	MORGAN	69	11
		CONTRACT NO. 72263		
	ILLINOIS	FED. AID PROJECT		

*US 67 / IL 100 / IL 104

LEGEND

1. EXISTING P.C.C. PAVEMENT, 9"-6"-9"
2. EXISTING P.C.C. BASE COURSE, 8"
3. EXISTING P.C.C. PAVEMENT, 8" WITH REINFORCEMENT
4. EXISTING P.C.C. PAVEMENT, 10"
5. EXISTING P.C.C. WIDENING
6. EXISTING P.C.C. SHOULDERS, 10"
7. EXISTING BITUMINOUS CONCRETE
8. EXISTING BITUMINOUS CONCRETE BASE COURSE,10"
9. EXISTING BITUMINOUS SHOULDER SUPERPAVE, 2.25"
10. EXISTING BITUMINOUS SHOULDER, 6"
11. EXISTING BITUMINOUS SHOULDER, 8"
12. POLYMERIZED STON MATRIX ASPHALT, SUPERPAVE, 1.5"
13. EXISTING HMA SHOULDER, 10.25"
14. EXISTING HMA SHOULDER, 10.5"
15. EXISTING AGGREGATE SHOULDER
16. EXISTING STABALIZED SUB-BASE
17. EXISTING SUB-BASE GRANULAR MATERIAL
18. EXISTING SUB-BASE GRANULAR MATERIAL, 4"
19. EXISTING SMOOTH BAR, 3/4"
20. EXISTING TIE BAR, 1/2"
21. EXISTING P.C.C. MEDIAN SURFACE, 4"
22. EXISTING CORRUGATED P.C. CONCRETE MEDIAN
23. EXISTING BAM SHOULDER, 2.5"
24. EXISISTING UNDERDRAINS, 6"

- A PR HMA SURFACE REMOVAL, 1.5"
- B PR POLYMERIZED HMA SURFACE COURSE, MIX C, N50, 1.5"
- C PR HMA BINDER COURSE, N50, 2.25"
- D PR HMA SHOULDER TOP LIFT, N50, 1.5"
- E PR HMA SHOULDER LOWER LIFT, N50
- F PR AGGREGATE WEDGE SHOULDER, TYPE B
- G PR CONCRETE MEDIAN SURFACE REMOVAL
- H PR COMBINATION CURB AND GUTTER REMOVAL
- I PR COMBINATION CURB AND GUTTER, TYPE M6.06
- J PR CONCRETE MEDIAN SURFACE, 4"
- K PR EXCAVATING AND GRADING EXISTING SHOULDER (SPECIAL)
- L PR CORRUGATED MEDIAN REMOVAL
- M PR CORRUGATED MEDIAN
- N PR GRADING AND SHAPING SHOULDER
- O PR SUBBASE GRANULAR MATERIAL, TYPE B

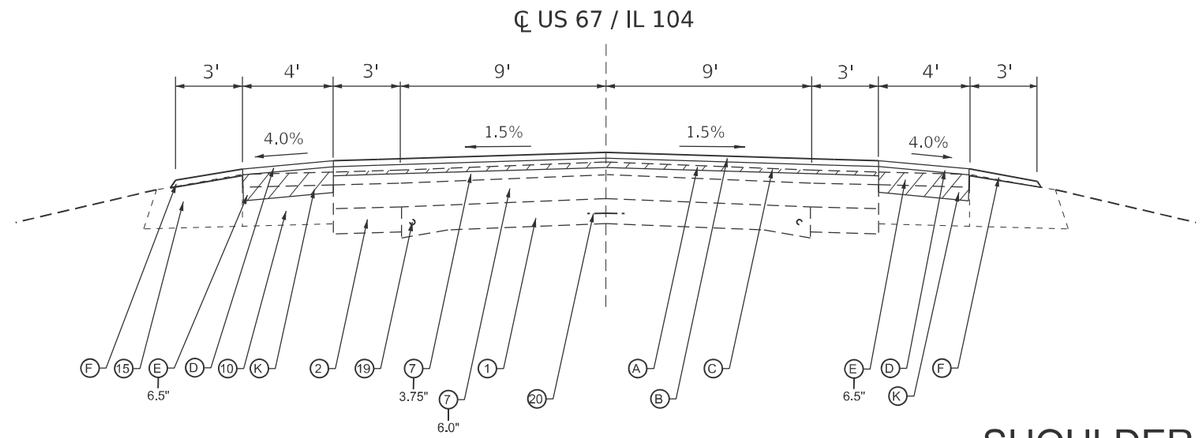

TYPICAL SECTION

STA. 136+29.00 TO STA. 149+83.00

SHOULDER DETAIL

EXISTING SHOULDERS
VARIES 1.5' TO 4'

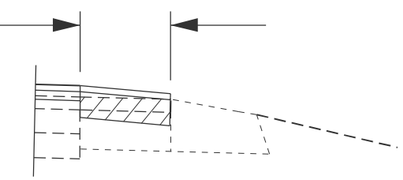

BETWEEN STA 140+00 TO STA 143+00
NOTE:
PR SHOULDER ENDS AT STA 140+96.7

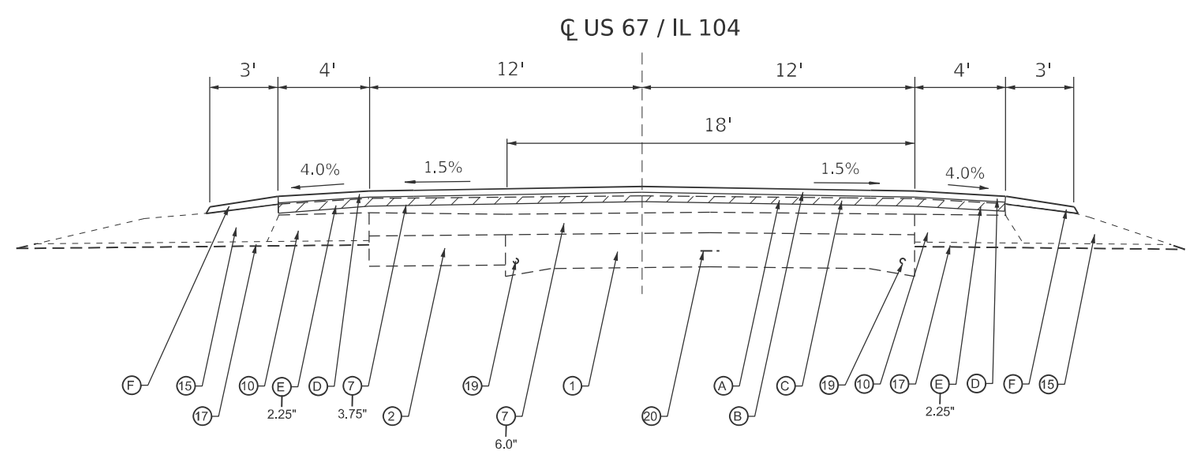

TYPICAL SECTION

STA. 149+83.00 TO STA. 150+60.00

MODEL: Page 31 [Sheet]
FILE NAME: c:\pw_work\pwidot\carl.johnson@illinois.gov\d0858453\D672263 Sht - Typicals.dgn

USER NAME = carl.johnson	DESIGNED -	REVISED -	
	DRAWN -	REVISED -	
	CHECKED -	REVISED -	
PLOT DATE = 4/3/2025	DATE -	REVISED -	

STATE OF ILLINOIS
DEPARTMENT OF TRANSPORTATION

TYPICAL SECTIONS

SCALE: | SHEET 4 OF 15 SHEETS | STA. | TO STA.

F.A.P RTE.	SECTION	COUNTY	TOTAL SHEETS	SHEET NO.
*	(1115BDR, 116SR)RS-5, 124RS-8	MORGAN	69	12
		CONTRACT NO. 72263		
	ILLINOIS	FED. AID PROJECT		

*US 67 / IL 100 / IL 104

LEGEND

1. EXISTING P.C.C. PAVEMENT, 9"-6"-9"
2. EXISTING P.C.C. BASE COURSE, 8"
3. EXISTING P.C.C. PAVEMENT, 8" WITH REINFORCEMENT
4. EXISTING P.C.C. PAVEMENT, 10"
5. EXISTING P.C.C. WIDENING
6. EXISTING P.C.C. SHOULDERS, 10"
7. EXISTING BITUMINOUS CONCRETE
8. EXISTING BITUMINOUS CONCRETE BASE COURSE,10"
9. EXISTING BITUMINOUS SHOULDER SUPERPAVE, 2.25"
10. EXISTING BITUMINOUS SHOULDER, 6"
11. EXISTING BITUMINOUS SHOULDER, 8"
12. POLYMERIZED STON MATRIX ASPHALT, SUPERPAVE, 1.5"
13. EXISTING HMA SHOULDER, 10.25"
14. EXISTING HMA SHOULDER, 10.5"
15. EXISTING AGGREGATE SHOULDER
16. EXISTING STABALIZED SUB-BASE
17. EXISTING SUB-BASE GRANULAR MATERIAL
18. EXISTING SUB-BASE GRANULAR MATERIAL, 4"
19. EXISTING SMOOTH BAR, 3/4"
20. EXISTING TIE BAR, 1/2"
21. EXISTING P.C.C. MEDIAN SURFACE, 4"
22. EXISTING CORRUGATED P.C. CONCRETE MEDIAN
23. EXISTING BAM SHOULDER, 2.5"
24. EXISISITING UNDERDRAINS, 6"

- A PR HMA SURFACE REMOVAL, 1.5"
- B PR POLYMERIZED HMA SURFACE COURSE, MIX C, N50, 1.5"
- C PR HMA BINDER COURSE, N50, 2.25"
- D PR HMA SHOULDER TOP LIFT, N50, 1.5"
- E PR HMA SHOULDER LOWER LIFT, N50
- F PR AGGREGATE WEDGE SHOULDER, TYPE B
- G PR CONCRETE MEDIAN SURFACE REMOVAL
- H PR COMBINATION CURB AND GUTTER REMOVAL
- I PR COMBINATION CURB AND GUTTER, TYPE M6.06
- J PR CONCRETE MEDIAN SURFACE, 4"
- K PR EXCAVATING AND GRADING EXISTING SHOULDER (SPECIAL)
- L PR CORRUGATED MEDIAN REMOVAL
- M PR CORRUGATED MEDIAN
- N PR GRADING AND SHAPING SHOULDER
- O PR SUBBASE GRANULAR MATERIAL, TYPE B

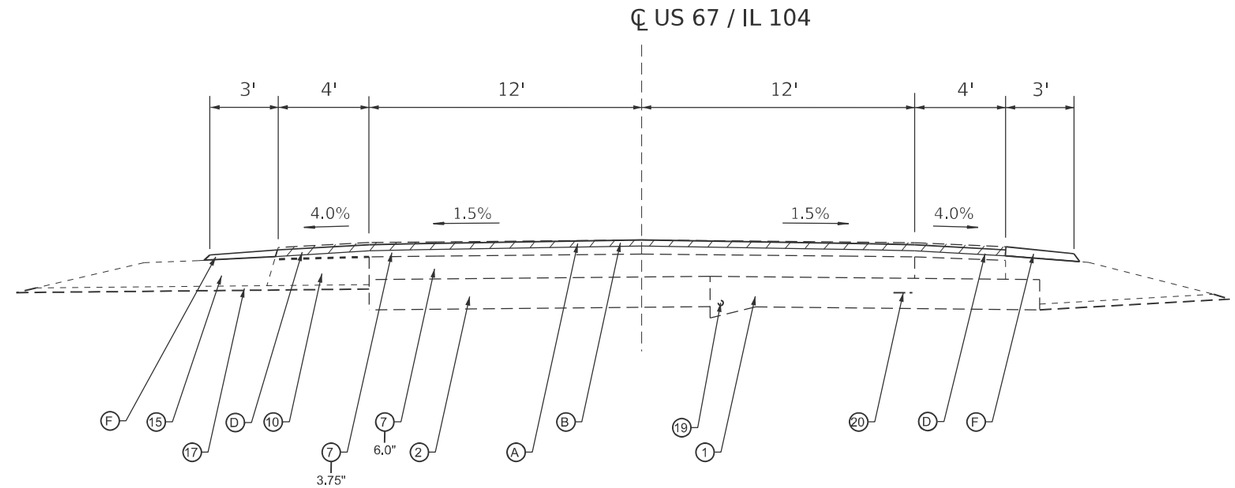

TYPICAL SECTION

STA. 150+60.00 TO STA. 152+52.00

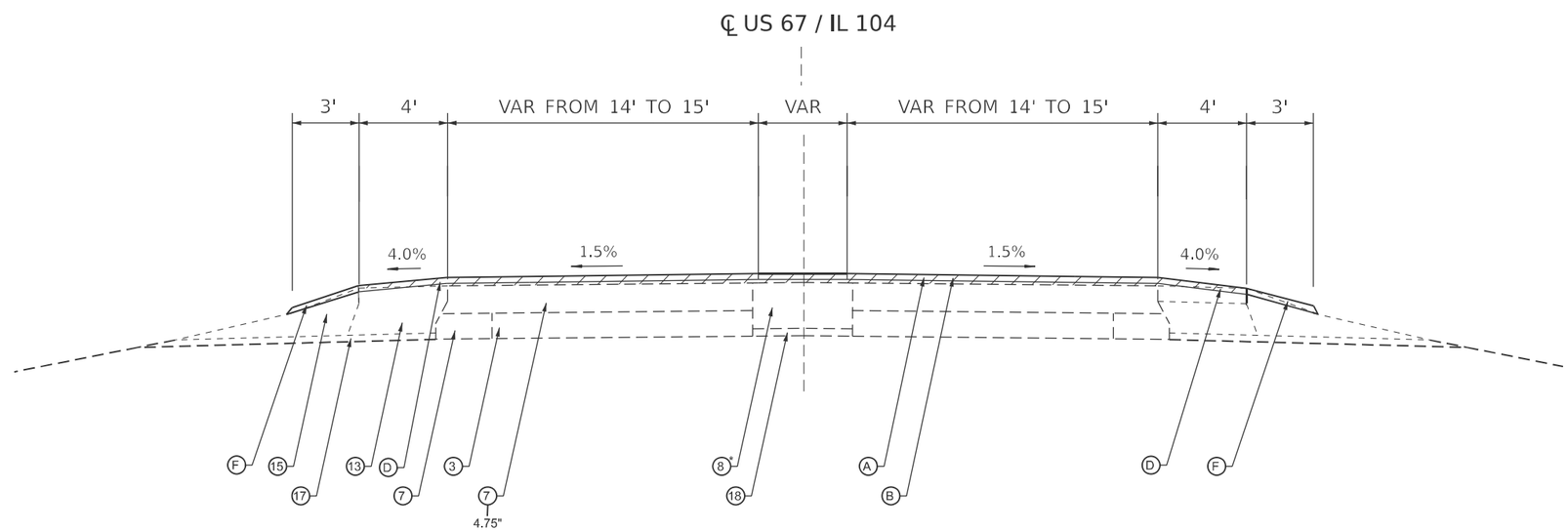

NOTE:
* PCC BASE COURSE, 10" IS PRESANT INSTEAD WHEN THE WIDTH OF THE EXISTING BASE IS LESS THAN OR EQUAL TO 4'

TYPICAL SECTION

STA. 152+52.00 TO STA. 153+63.00

MODEL: Page 32 [Sheet]
FILE NAME: c:\pw_work\pwidot\carl.johnson@illinois.gov\d0859453\D672263 Sht - Typicals.dgn

USER NAME = carl.johnson	DESIGNED -	REVISED -	
	DRAWN -	REVISED -	
	CHECKED -	REVISED -	
PLOT DATE = 4/3/2025	DATE -	REVISED -	

STATE OF ILLINOIS
DEPARTMENT OF TRANSPORTATION

TYPICAL SECTIONS

SCALE: SHEET 5 OF 15 SHEETS STA. TO STA.

F.A.P RTE.	SECTION	COUNTY	TOTAL SHEETS	SHEET NO.
*	(1115BDR, 116SR)RS-5, 124RS-8	MORGAN	69	13
		CONTRACT NO. 72263		
	ILLINOIS	FED. AID PROJECT		

*US 67 / IL 100 / IL 104

LEGEND

1. EXISTING P.C.C. PAVEMENT, 9"-6"-9"
2. EXISTING P.C.C. BASE COURSE, 8"
3. EXISTING P.C.C. PAVEMENT, 8" WITH REINFORCEMENT
4. EXISTING P.C.C. PAVEMENT, 10"
5. EXISTING P.C.C. WIDENING
6. EXISTING P.C.C. SHOULDERS, 10"
7. EXISTING BITUMINOUS CONCRETE
8. EXISTING BITUMINOUS CONCRETE BASE COURSE,10"
9. EXISTING BITUMINOUS SHOULDER SUPERPAVE, 2.25"
10. EXISTING BITUMINOUS SHOULDER, 6"
11. EXISTING BITUMINOUS SHOULDER, 8"
12. POLYMERIZED STON MATRIX ASPHALT, SUPERPAVE, 1.5"
13. EXISTING HMA SHOULDER, 10.25"
14. EXISTING HMA SHOULDER, 10.5"
15. EXISTING AGGREGATE SHOULDER
16. EXISTING STABALIZED SUB-BASE
17. EXISTING SUB-BASE GRANULAR MATERIAL
18. EXISTING SUB-BASE GRANULAR MATERIAL, 4"
19. EXISTING SMOOTH BAR, 3/4"
20. EXISTING TIE BAR, 1/2"
21. EXISTING P.C.C. MEDIAN SURFACE, 4"
22. EXISTING CORRUGATED P.C. CONCRETE MEDIAN
23. EXISTING BAM SHOULDER, 2.5"
24. EXISITING UNDERDRAINS, 6"

- A PR HMA SURFACE REMOVAL, 1.5"
- B PR POLYMERIZED HMA SURFACE COURSE, MIX C, N50, 1.5"
- C PR HMA BINDER COURSE, N50, 2.25"
- D PR HMA SHOULDER TOP LIFT, N50, 1.5"
- E PR HMA SHOULDER LOWER LIFT, N50
- F PR AGGREGATE WEDGE SHOULDER, TYPE B
- G PR CONCRETE MEDIAN SURFACE REMOVAL
- H PR COMBINATION CURB AND GUTTER REMOVAL
- I PR COMBINATION CURB AND GUTTER, TYPE M6.06
- J PR CONCRETE MEDIAN SURFACE, 4"
- K PR EXCAVATING AND GRADING EXISTING SHOULDER (SPECIAL)
- L PR CORRUGATED MEDIAN REMOVAL
- M PR CORRUGATED MEDIAN
- N PR GRADING AND SHAPING SHOULDER
- O PR SUBBASE GRANULAR MATERIAL, TYPE B

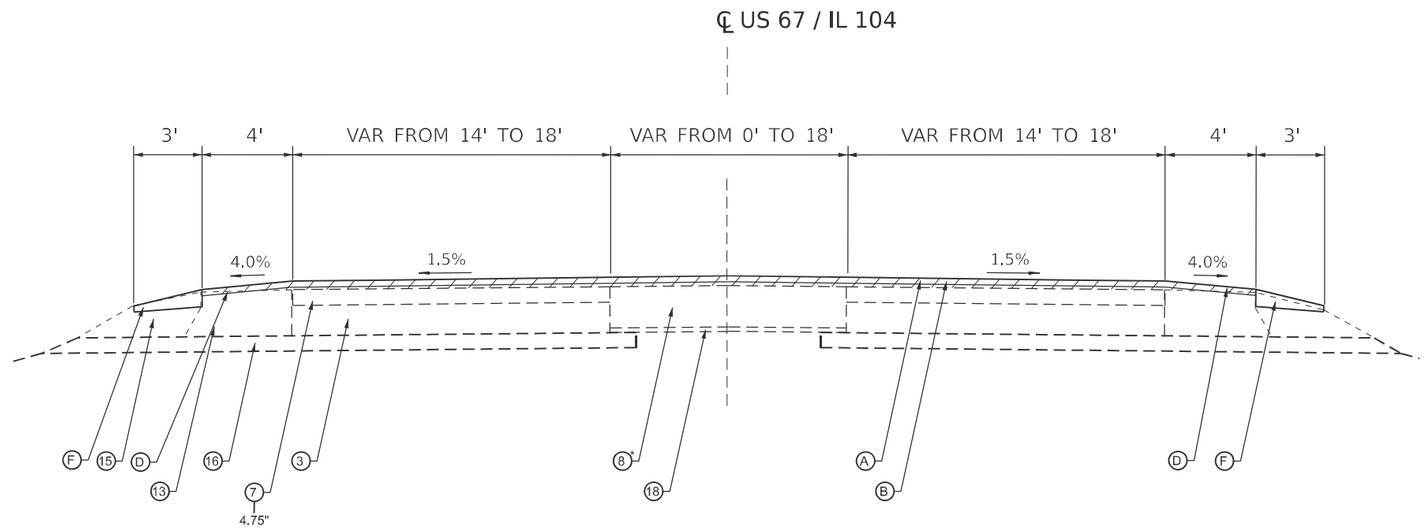

TYPICAL SECTION

STA. 153+63.00 TO STA. 168+40.90

NOTE:
* PCC BASE COURSE, 10" IS PRESANT INSTEAD WHEN THE WIDTH OF THE EXISTING BASE IS LESS THAN OR EQUAL TO 4'

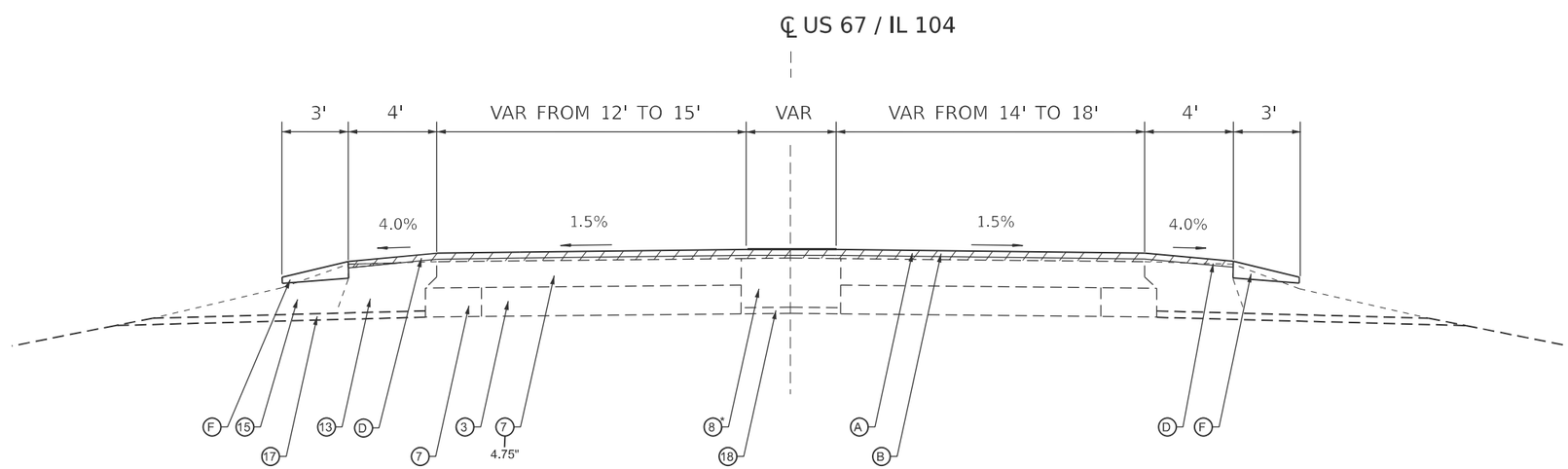

NOTE:
* PCC BASE COURSE, 10" IS PRESANT INSTEAD WHEN THE WIDTH OF THE EXISTING BASE IS LESS THAN OR EQUAL TO 4'

TYPICAL SECTION

STA. 168+40.90 TO STA. 169+92.80

MODEL: Page 33 [Sheet]
FILE NAME: c:\pw_work\pwidot\carl.johnson@illinois.gov\d0858453\D672263 Sht - Typicals.dgn

USER NAME = carl.johnson	DESIGNED -	REVISED -	
	DRAWN -	REVISED -	
	CHECKED -	REVISED -	
PLOT DATE = 4/3/2025	DATE -	REVISED -	

STATE OF ILLINOIS
DEPARTMENT OF TRANSPORTATION

TYPICAL SECTIONS

SCALE: | SHEET 6 OF 15 SHEETS | STA. | TO STA.

F.A.P RTE.	SECTION	COUNTY	TOTAL SHEETS	SHEET NO.
*	(1115BDR, 116SR)RS-5, 124RS-8	MORGAN	69	14

CONTRACT NO. 72263

ILLINOIS | FED. AID PROJECT

*US 67 / IL 100 / IL 104

LEGEND

1. EXISTING P.C.C. PAVEMENT, 9"-6"-9"
2. EXISTING P.C.C. BASE COURSE, 8"
3. EXISTING P.C.C. PAVEMENT, 8" WITH REINFORCEMENT
4. EXISTING P.C.C. PAVEMENT, 10"
5. EXISTING P.C.C. WIDENING
6. EXISTING P.C.C. SHOULDERS, 10"
7. EXISTING BITUMINOUS CONCRETE
8. EXISTING BITUMINOUS CONCRETE BASE COURSE,10"
9. EXISTING BITUMINOUS SHOULDER SUPERPAVE, 2.25"
10. EXISTING BITUMINOUS SHOULDER, 6"
11. EXISTING BITUMINOUS SHOULDER, 8"
12. POLYMERIZED STON MATRIX ASPHALT, SUPERPAVE, 1.5"
13. EXISTING HMA SHOULDER, 10.25"
14. EXISTING HMA SHOULDER, 10.5"
15. EXISTING AGGREGATE SHOULDER
16. EXISTING STABALIZED SUB-BASE
17. EXISTING SUB-BASE GRANULAR MATERIAL
18. EXISTING SUB-BASE GRANULAR MATERIAL, 4"
19. EXISTING SMOOTH BAR, 3/4"
20. EXISTING TIE BAR, 1/2"
21. EXISTING P.C.C. MEDIAN SURFACE, 4"
22. EXISTING CORRUGATED P.C. CONCRETE MEDIAN
23. EXISTING BAM SHOULDER, 2.5"
24. EXISITING UNDERDRAINS, 6"

- A PR HMA SURFACE REMOVAL, 1.5"
- B PR POLYMERIZED HMA SURFACE COURSE, MIX C, N50, 1.5"
- C PR HMA BINDER COURSE, N50, 2.25"
- D PR HMA SHOULDER TOP LIFT, N50, 1.5"
- E PR HMA SHOULDER LOWER LIFT, N50
- F PR AGGREGATE WEDGE SHOULDER, TYPE B
- G PR CONCRETE MEDIAN SURFACE REMOVAL
- H PR COMBINATION CURB AND GUTTER REMOVAL
- I PR COMBINATION CURB AND GUTTER, TYPE M6.06
- J PR CONCRETE MEDIAN SURFACE, 4"
- K PR EXCAVATING AND GRADING EXISTING SHOULDER (SPECIAL)
- L PR CORRUGATED MEDIAN REMOVAL
- M PR CORRUGATED MEDIAN
- N PR GRADING AND SHAPING SHOULDER
- O PR SUBBASE GRANULAR MATERIAL, TYPE B

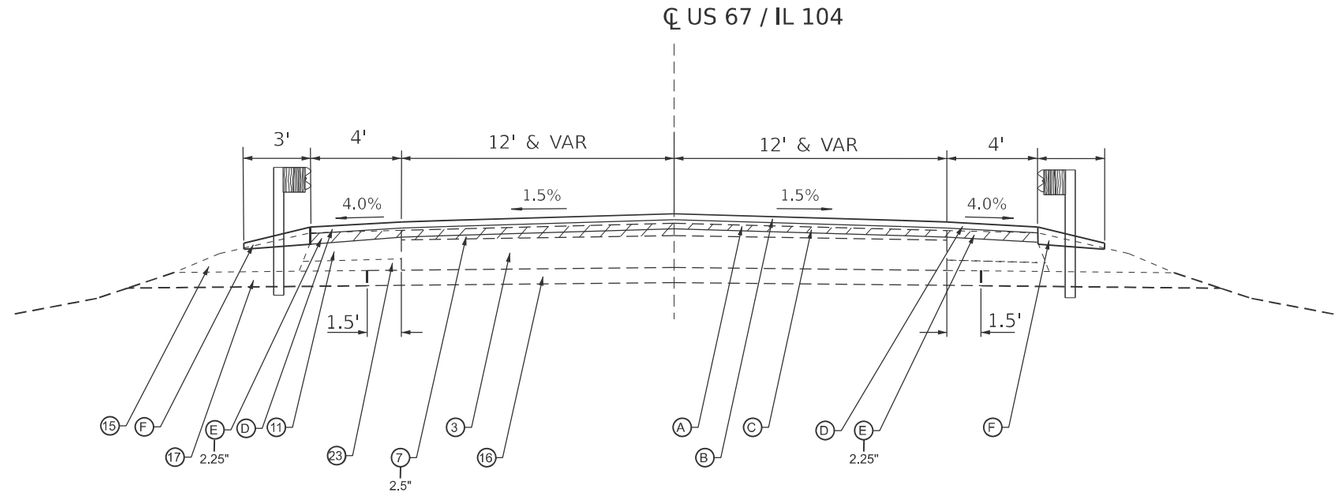

TYPICAL SECTION

STA. 169+92.80 TO STA. 174+00.00
STA. 195+00.00 TO STA. 199+07.87
24' PAV'T
STA. 174+00.00 TO STA. 192+22.20
STA. 194+06.40 TO STA. 195+00.00
STA. 268+80.00 TO STA. 269+00.00

GUARDRAIL LOCATIONS:
RT STA. 190+60.50 TO STA. 192+15.64
LT STA. 191+32.5 TO STA. 192+22.19
RT STA. 194+06.40 TO STA. 194+87.50
LT STA. 194+06.40 TO STA. 195+67.50
PARAPET LOCATIONS:
RT STA. 192+15.64 TO STA. 192+22.19

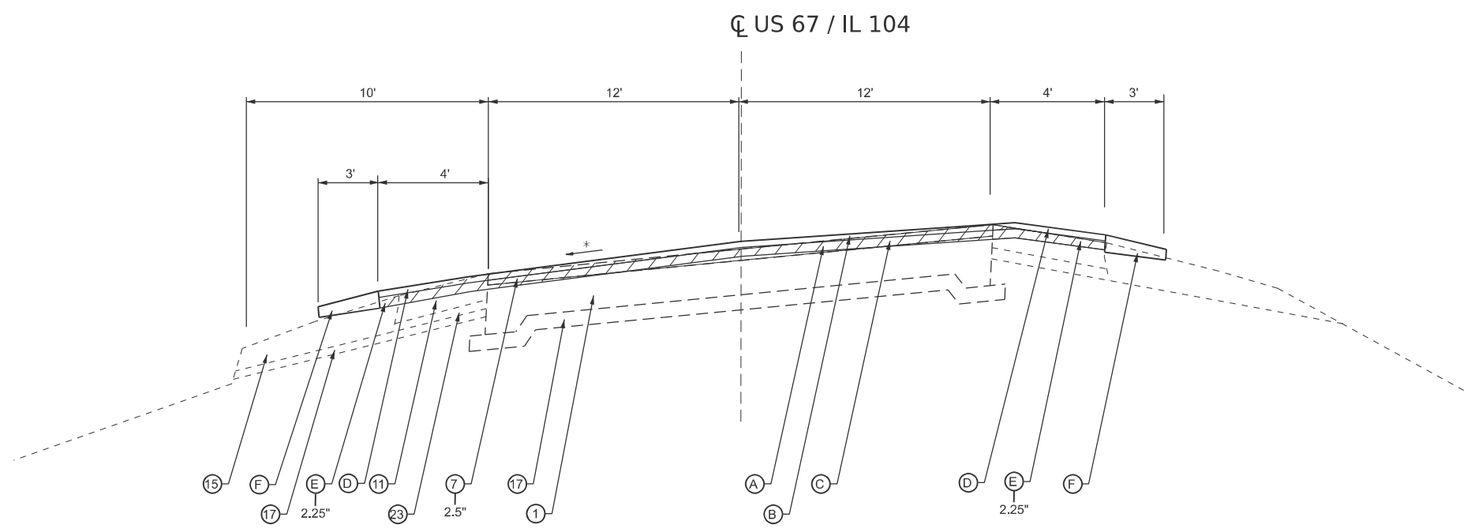

TYPICAL SECTION

STA. 192+22.19 TO STA. 192+49.12
STA. 193+79.47 TO STA. 194+06.40

* MATCH EXISTING SUPER ELEVATION

MODEL: Page 34 [Sheet]
FILE NAME: c:\pw_work\pwidot\carl.johnson@illinois.gov\d0858453\D672263 Sht - Typicals.dgn

USER NAME = carl.johnson	DESIGNED -	REVISED -	STATE OF ILLINOIS DEPARTMENT OF TRANSPORTATION
	DRAWN -	REVISED -	
	CHECKED -	REVISED -	
PLOT DATE = 4/3/2025	DATE -	REVISED -	

TYPICAL SECTIONS

SCALE: SHEET 7 OF 15 SHEETS STA. TO STA.

F.A.P RTE.	SECTION	COUNTY	TOTAL SHEETS	SHEET NO.
*	(1115BDR, 116SR)RS-5, 124RS-8	MORGAN	69	15
		CONTRACT NO. 72263		
	ILLINOIS	FED. AID PROJECT		

*US 67 / IL 100 / IL 104

LEGEND

1. EXISTING P.C.C. PAVEMENT, 9"-6"-9"
2. EXISTING P.C.C. BASE COURSE, 8"
3. EXISTING P.C.C. PAVEMENT, 8" WITH REINFORCEMENT
4. EXISTING P.C.C. PAVEMENT, 10"
5. EXISTING P.C.C. WIDENING
6. EXISTING P.C.C. SHOULDERS, 10"
7. EXISTING BITUMINOUS CONCRETE
8. EXISTING BITUMINOUS CONCRETE BASE COURSE,10"
9. EXISTING BITUMINOUS SHOULDER SUPERPAVE, 2.25"
10. EXISTING BITUMINOUS SHOULDER, 6"
11. EXISTING BITUMINOUS SHOULDER, 8"
12. POLYMERIZED STON MATRIX ASPHALT, SUPERPAVE, 1.5"
13. EXISTING HMA SHOULDER, 10.25"
14. EXISTING HMA SHOULDER, 10.5"
15. EXISTING AGGREGATE SHOULDER
16. EXISTING STABALIZED SUB-BASE
17. EXISTING SUB-BASE GRANULAR MATERIAL
18. EXISTING SUB-BASE GRANULAR MATERIAL, 4"
19. EXISTING SMOOTH BAR, 3/4"
20. EXISTING TIE BAR, 1/2"
21. EXISTING P.C.C. MEDIAN SURFACE, 4"
22. EXISTING CORRUGATED P.C. CONCRETE MEDIAN
23. EXISTING BAM SHOULDER, 2.5"
24. EXISITING UNDERDRAINS, 6"

- A PR HMA SURFACE REMOVAL, 1.5"
- B PR POLYMERIZED HMA SURFACE COURSE, MIX C, N50, 1.5"
- C PR HMA BINDER COURSE, N50, 2.25"
- D PR HMA SHOULDER TOP LIFT, N50, 1.5"
- E PR HMA SHOULDER LOWER LIFT, N50
- F PR AGGREGATE WEDGE SHOULDER, TYPE B
- G PR CONCRETE MEDIAN SURFACE REMOVAL
- H PR COMBINATION CURB AND GUTTER REMOVAL
- I PR COMBINATION CURB AND GUTTER, TYPE M6.06
- J PR CONCRETE MEDIAN SURFACE, 4"
- K PR EXCAVATING AND GRADING EXISTING SHOULDER (SPECIAL)
- L PR CORRUGATED MEDIAN REMOVAL
- M PR CORRUGATED MEDIAN
- N PR GRADING AND SHAPING SHOULDER
- O PR SUBBASE GRANULAR MATERIAL, TYPE B

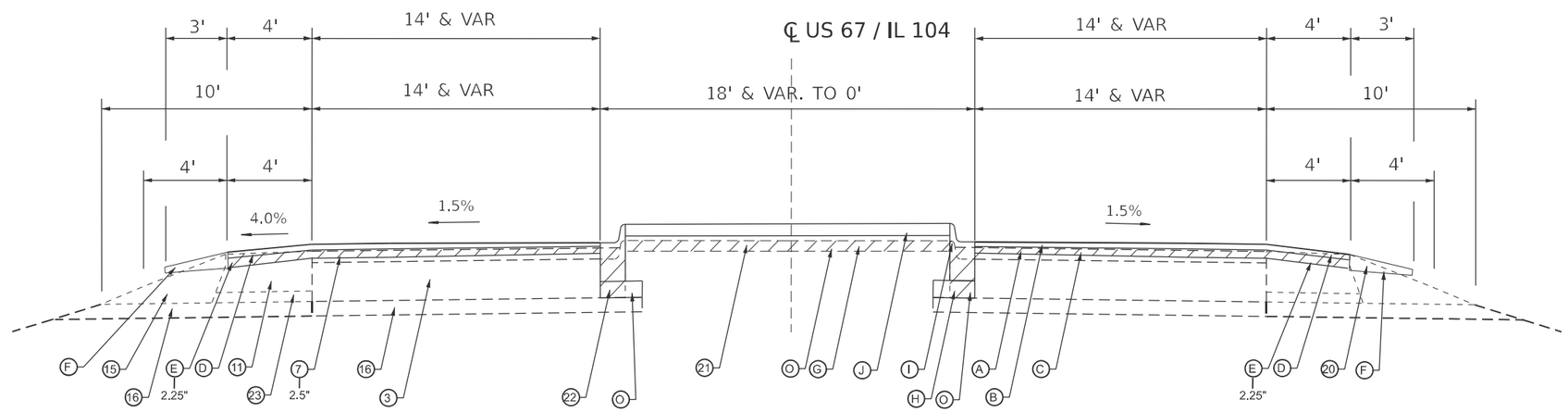

TYPICAL SECTION

STA. 199+07.81 TO STA. 216+67.19 (US 67)
STA. 0+26.00 TO STA. 21+98 (IL 100)
EQN: STA. 212+58.72 BK = STA. 212+99.44 AH

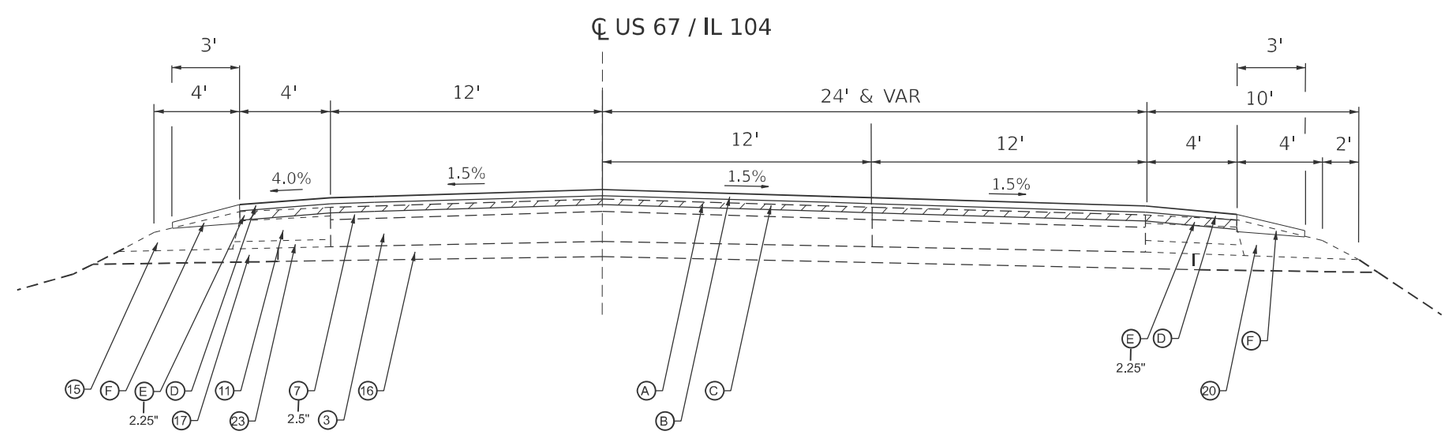

TYPICAL SECTION

STA. 216+67.19 TO STA. 268+80.00

MODEL: Page 35 [Sheet]
FILE NAME: c:\pw_work\pwidot\carl.johnson@illinois.gov\d0858453\D672263 Sht - Typicals.dgn

USER NAME = carl.johnson	DESIGNED -	REVISED -	
	DRAWN -	REVISED -	
	CHECKED -	REVISED -	
PLOT DATE = 4/3/2025	DATE -	REVISED -	

STATE OF ILLINOIS
DEPARTMENT OF TRANSPORTATION

TYPICAL SECTIONS

SCALE: | SHEET 8 OF 15 SHEETS | STA. | TO STA.

F.A.P RTE.	SECTION	COUNTY	TOTAL SHEETS	SHEET NO.
*	(1115BDR, 116SR)RS-5, 124RS-8	MORGAN	69	16
		CONTRACT NO. 72263		
	ILLINOIS	FED. AID PROJECT		

*US 67 / IL 100 / IL 104

LEGEND

1. EXISTING P.C.C. PAVEMENT, 9"-6"-9"
2. EXISTING P.C.C. BASE COURSE, 8"
3. EXISTING P.C.C. PAVEMENT, 8" WITH REINFORCEMENT
4. EXISTING P.C.C. PAVEMENT, 10"
5. EXISTING P.C.C. WIDENING
6. EXISTING P.C.C. SHOULDERS, 10"
7. EXISTING BITUMINOUS CONCRETE
8. EXISTING BITUMINOUS CONCRETE BASE COURSE,10"
9. EXISTING BITUMINOUS SHOULDER SUPERPAVE, 2.25"
10. EXISTING BITUMINOUS SHOULDER, 6"
11. EXISTING BITUMINOUS SHOULDER, 8"
12. POLYMERIZED STON MATRIX ASPHALT, SUPERPAVE, 1.5"
13. EXISTING HMA SHOULDER, 10.25"
14. EXISTING HMA SHOULDER, 10.5"
15. EXISTING AGGREGATE SHOULDER
16. EXISTING STABALIZED SUB-BASE
17. EXISTING SUB-BASE GRANULAR MATERIAL
18. EXISTING SUB-BASE GRANULAR MATERIAL, 4"
19. EXISTING SMOOTH BAR, 3/4"
20. EXISTING TIE BAR, 1/2"
21. EXISTING P.C.C. MEDIAN SURFACE, 4"
22. EXISTING CORRUGATED P.C. CONCRETE MEDIAN
23. EXISTING BAM SHOULDER, 2.5"
24. EXISISTING UNDERDRAINS, 6"

- A PR HMA SURFACE REMOVAL, 1.5"
- B PR POLYMERIZED HMA SURFACE COURSE, MIX C, N50, 1.5"
- C PR HMA BINDER COURSE, N50, 2.25"
- D PR HMA SHOULDER TOP LIFT, N50, 1.5"
- E PR HMA SHOULDER LOWER LIFT, N50
- F PR AGGREGATE WEDGE SHOULDER, TYPE B
- G PR CONCRETE MEDIAN SURFACE REMOVAL
- H PR COMBINATION CURB AND GUTTER REMOVAL
- I PR COMBINATION CURB AND GUTTER, TYPE M6.06
- J PR CONCRETE MEDIAN SURFACE, 4"
- K PR EXCAVATING AND GRADING EXISTING SHOULDER (SPECIAL)
- L PR CORRUGATED MEDIAN REMOVAL
- M PR CORRUGATED MEDIAN
- N PR GRADING AND SHAPING SHOULDER
- O PR SUBBASE GRANULAR MATERIAL, TYPE B

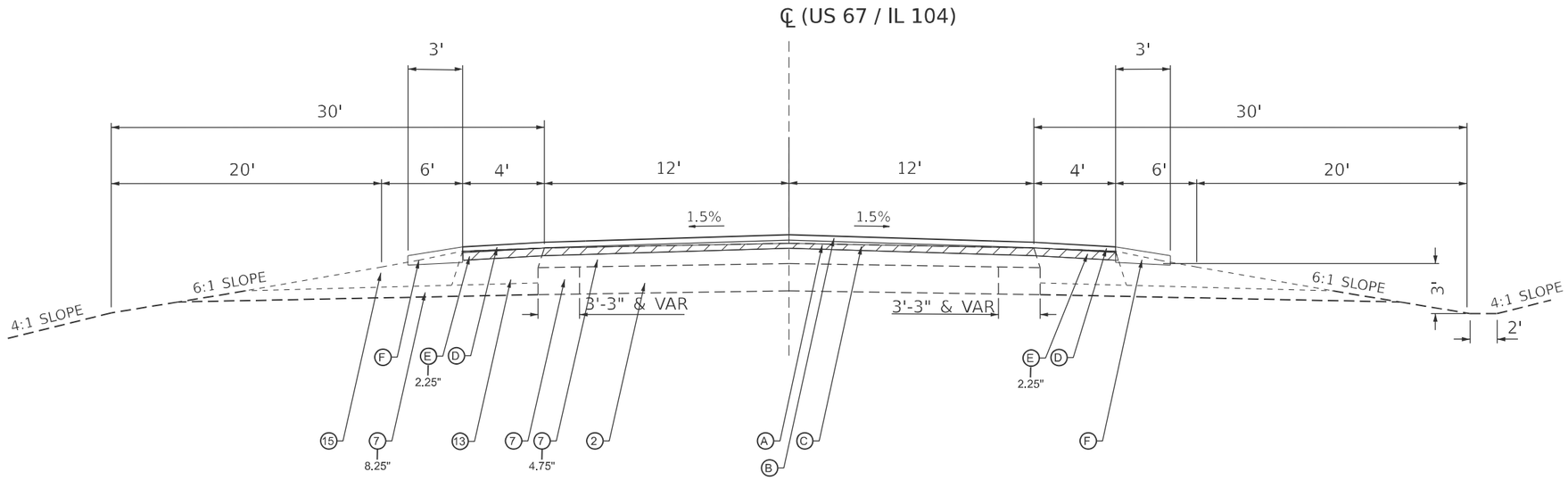

TYPICAL SECTION

STA. 269+00.00 TO STA. 312+16.60

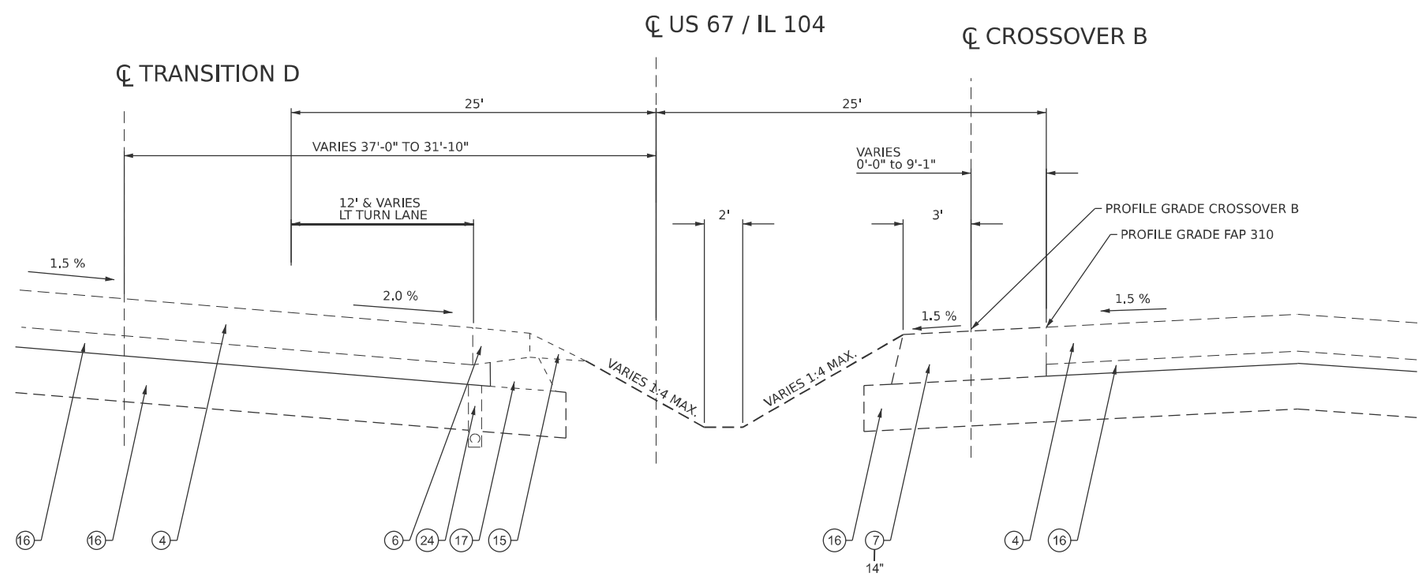

TYPICAL SECTION FAP 310 (US 67/IL 104) WITH CROSSOVER B & TRANSITION D

STA. 1126+83.80 TO STA 1130+05.25 FAP 310 (US 67)
STA 15+30.22 TO STA 22+99.37 CROSSOVER B
STA 0+00.00 TO STA 3+21.51 TRANSITION D

MODEL: Page 36 [Sheet]
FILE NAME: c:\pw_work\pwidot\carl.johnson@illinois.gov\d0858453\D672263 Sht - Typicals.dgn

USER NAME = carl.johnson	DESIGNED -	REVISED -	STATE OF ILLINOIS DEPARTMENT OF TRANSPORTATION
	DRAWN -	REVISED -	
	CHECKED -	REVISED -	
PLOT DATE = 4/3/2025	DATE -	REVISED -	

TYPICAL SECTIONS

SCALE: SHEET 9 OF 15 SHEETS STA. TO STA.

F.A.P RTE.	SECTION	COUNTY	TOTAL SHEETS	SHEET NO.
*	(1115BDR, 116SR)RS-5, 124RS-8	MORGAN	69	17
		CONTRACT NO. 72263		
		ILLINOIS	FED. AID PROJECT	

*US 67 / IL 100 / IL 104

LEGEND

1. EXISTING P.C.C. PAVEMENT, 9"-6"-9"
2. EXISTING P.C.C. BASE COURSE, 8"
3. EXISTING P.C.C. PAVEMENT, 8" WITH REINFORCEMENT
4. EXISTING P.C.C. PAVEMENT, 10"
5. EXISTING P.C.C. WIDENING
6. EXISTING P.C.C. SHOULDERS, 10"
7. EXISTING BITUMINOUS CONCRETE
8. EXISTING BITUMINOUS CONCRETE BASE COURSE,10"
9. EXISTING BITUMINOUS SHOULDER SUPERPAVE, 2.25"
10. EXISTING BITUMINOUS SHOULDER, 6"
11. EXISTING BITUMINOUS SHOULDER, 8"
12. POLYMERIZED STON MATRIX ASPHALT, SUPERPAVE, 1.5"
13. EXISTING HMA SHOULDER, 10.25"
14. EXISTING HMA SHOULDER, 10.5"
15. EXISTING AGGREGATE SHOULDER
16. EXISTING STABALIZED SUB-BASE
17. EXISTING SUB-BASE GRANULAR MATERIAL
18. EXISTING SUB-BASE GRANULAR MATERIAL, 4"
19. EXISTING SMOOTH BAR, 3/4"
20. EXISTING TIE BAR, 1/2"
21. EXISTING P.C.C. MEDIAN SURFACE, 4"
22. EXISTING CORRUGATED P.C. CONCRETE MEDIAN
23. EXISTING BAM SHOULDER, 2.5"
24. EXISISTING UNDERDRAINS, 6"

A. PR HMA SURFACE REMOVAL, 1.5"
B. PR POLYMERIZED HMA SURFACE COURSE, MIX C, N50, 1.5"
C. PR HMA BINDER COURSE, N50, 2.25"
D. PR HMA SHOULDER TOP LIFT, N50, 1.5"
E. PR HMA SHOULDER LOWER LIFT, N50
F. PR AGGREGATE WEDGE SHOULDER, TYPE B
G. PR CONCRETE MEDIAN SURFACE REMOVAL
H. PR COMBINATION CURB AND GUTTER REMOVAL
I. PR COMBINATION CURB AND GUTTER, TYPE M6.06
J. PR CONCRETE MEDIAN SURFACE, 4"
K. PR EXCAVATING AND GRADING EXISTING SHOULDER (SPECIAL)
L. PR CORRUGATED MEDIAN REMOVAL
M. PR CORRUGATED MEDIAN
N. PR GRADING AND SHAPING SHOULDER
O. PR SUBBASE GRANULAR MATERIAL, TYPE B

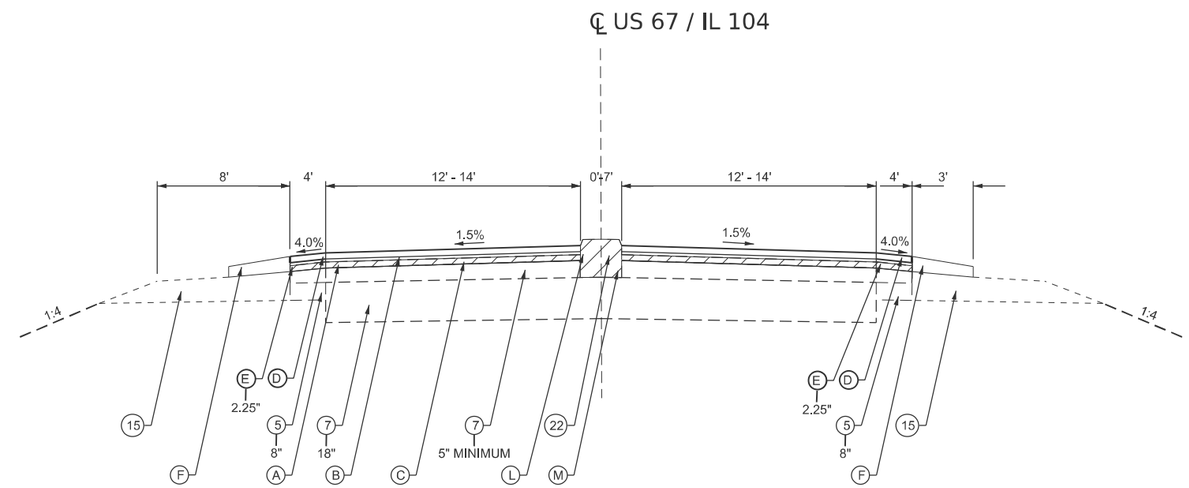

TYPICAL SECTION

STA. 21+98 TO STA. 25+00 (IL 100)

MODEL: Page 43 [Sheet]
FILE NAME: c:\pw_work\pwidot\carl.johnson@illinois.gov\d0858453\D672263 Sht - Typicals.dgn

USER NAME = carl.johnson	DESIGNED -	REVISED -	STATE OF ILLINOIS DEPARTMENT OF TRANSPORTATION
	DRAWN -	REVISED -	
	CHECKED -	REVISED -	
PLOT DATE = 4/3/2025	DATE -	REVISED -	

TYPICAL SECTIONS

SCALE: | SHEET 15 OF 15 SHEETS | STA. | TO STA.

F.A.P RTE.	SECTION	COUNTY	TOTAL SHEETS	SHEET NO.
*	(1115BDR, 116SR)RS-5, 124RS-8	MORGAN	69	18
		CONTRACT NO. 72263		
	ILLINOIS	FED. AID PROJECT		

*US 67 / IL 100 / IL 104

LEGEND

1. EXISTING P.C.C. PAVEMENT, 9"-6"-9"
2. EXISTING P.C.C. BASE COURSE, 8"
3. EXISTING P.C.C. PAVEMENT, 8" WITH REINFORCEMENT
4. EXISTING P.C.C. PAVEMENT, 10"
5. EXISTING P.C.C. WIDENING
6. EXISTING P.C.C. SHOULDERS, 10"
7. EXISTING BITUMINOUS CONCRETE
8. EXISTING BITUMINOUS CONCRETE BASE COURSE,10"
9. EXISTING BITUMINOUS SHOULDER SUPERPAVE, 2.25"
10. EXISTING BITUMINOUS SHOULDER, 6"
11. EXISTING BITUMINOUS SHOULDER, 8"
12. POLYMERIZED STON MATRIX ASPHALT, SUPERPAVE, 1.5"
13. EXISTING HMA SHOULDER, 10.25"
14. EXISTING HMA SHOULDER, 10.5"
15. EXISTING AGGREGATE SHOULDER
16. EXISTING STABALIZED SUB-BASE
17. EXISTING SUB-BASE GRANULAR MATERIAL
18. EXISTING SUB-BASE GRANULAR MATERIAL, 4"
19. EXISTING SMOOTH BAR, 3/4"
20. EXISTING TIE BAR, 1/2"
21. EXISTING P.C.C. MEDIAN SURFACE, 4"
22. EXISTING CORRUGATED P.C. CONCRETE MEDIAN
23. EXISTING BAM SHOULDER, 2.5"
24. EXISITING UNDERDRAINS, 6"

- A PR HMA SURFACE REMOVAL, 1.5"
- B PR POLYMERIZED HMA SURFACE COURSE, MIX C, N50, 1.5"
- C PR HMA BINDER COURSE, N50, 2.25"
- D PR HMA SHOULDER TOP LIFT, N50, 1.5"
- E PR HMA SHOULDER LOWER LIFT, N50
- F PR AGGREGATE WEDGE SHOULDER, TYPE B
- G PR CONCRETE MEDIAN SURFACE REMOVAL
- H PR COMBINATION CURB AND GUTTER REMOVAL
- I PR COMBINATION CURB AND GUTTER, TYPE M6.06
- J PR CONCRETE MEDIAN SURFACE, 4"
- K PR EXCAVATING AND GRADING EXISTING SHOULDER (SPECIAL)
- L PR CORRUGATED MEDIAN REMOVAL
- M PR CORRUGATED MEDIAN
- N PR GRADING AND SHAPING SHOULDER
- O PR SUBBASE GRANULAR MATERIAL, TYPE B

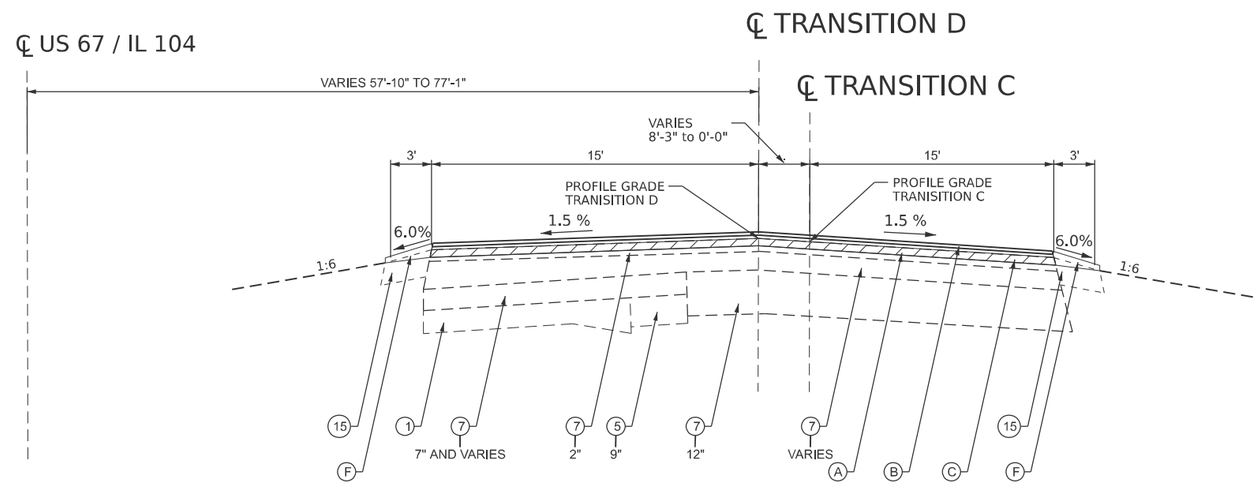

TYPICAL SECTION TRANSITION C & TRANSITION D

STA 1141+35.20 TO STA 1143+83.80 FAP 310
STA 14+54.93 TO STA 17+04.58 TRANSITION D
STA 57+35.65 TO STA 59+85.00 TRANSITION C

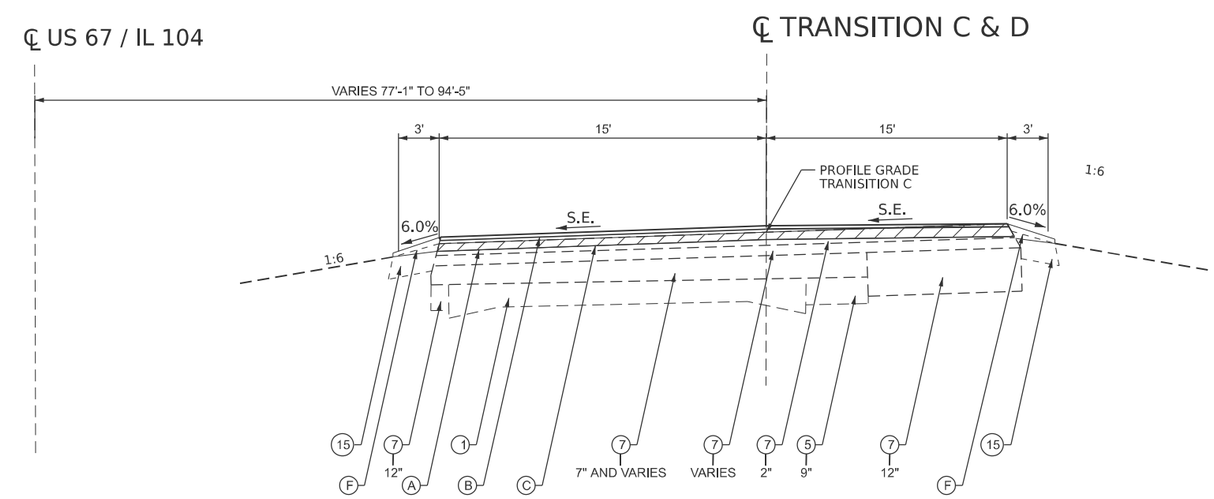

TYPICAL SECTION TRANSITION C & TRANSITION D

STA 1143+83.80 STA 1145+73.37 FAP 310
STA 17+04.58 TO 17+24.96 TRANSITION D
STA 59+85.00 TO 61+55.00 S.E. TRANS TRANSITION C
STA 61+55.00 TO STA 61+75.36 S.E. = 5.1%

MODEL: Page 44 [Sheet]
FILE NAME: c:\pw_work\pwidot\carl.johnson@illinois.gov\d0858453\D672263 Sht - Typicals.dgn

USER NAME = carl.johnson	DESIGNED -	REVISED -	STATE OF ILLINOIS DEPARTMENT OF TRANSPORTATION
	DRAWN -	REVISED -	
	CHECKED -	REVISED -	
PLOT DATE = 4/3/2025	DATE -	REVISED -	

TYPICAL SECTIONS

SCALE: SHEET 14 OF 15 SHEETS STA. TO STA.

F.A.P RTE.	SECTION	COUNTY	TOTAL SHEETS	SHEET NO.
*	(1115BDR, 116SR)RS-5, 124RS-8	MORGAN	69	19
		CONTRACT NO. 72263		
		ILLINOIS	FED. AID PROJECT	

*US 67 / IL 100 / IL 104

LEGEND

1. EXISTING P.C.C. PAVEMENT, 9"-6"-9"
2. EXISTING P.C.C. BASE COURSE, 8"
3. EXISTING P.C.C. PAVEMENT, 8" WITH REINFORCEMENT
4. EXISTING P.C.C. PAVEMENT, 10"
5. EXISTING P.C.C. WIDENING
6. EXISTING P.C.C. SHOULDERS, 10"
7. EXISTING BITUMINOUS CONCRETE
8. EXISTING BITUMINOUS CONCRETE BASE COURSE,10"
9. EXISTING BITUMINOUS SHOULDER SUPERPAVE, 2.25"
10. EXISTING BITUMINOUS SHOULDER, 6"
11. EXISTING BITUMINOUS SHOULDER, 8"
12. POLYMERIZED STON MATRIX ASPHALT, SUPERPAVE, 1.5"
13. EXISTING HMA SHOULDER, 10.25"
14. EXISTING HMA SHOULDER, 10.5"
15. EXISTING AGGREGATE SHOULDER
16. EXISTING STABALIZED SUB-BASE
17. EXISTING SUB-BASE GRANULAR MATERIAL
18. EXISTING SUB-BASE GRANULAR MATERIAL, 4"
19. EXISTING SMOOTH BAR, 3/4"
20. EXISTING TIE BAR, 1/2"
21. EXISTING P.C.C. MEDIAN SURFACE, 4"
22. EXISTING CORRUGATED P.C. CONCRETE MEDIAN
23. EXISTING BAM SHOULDER, 2.5"
24. EXISISITING UNDERDRAINS, 6"

- A PR HMA SURFACE REMOVAL, 1.5"
- B PR POLYMERIZED HMA SURFACE COURSE, MIX C, N50, 1.5"
- C PR HMA BINDER COURSE, N50, 2.25"
- D PR HMA SHOULDER TOP LIFT, N50, 1.5"
- E PR HMA SHOULDER LOWER LIFT, N50
- F PR AGGREGATE WEDGE SHOULDER, TYPE B
- G PR CONCRETE MEDIAN SURFACE REMOVAL
- H PR COMBINATION CURB AND GUTTER REMOVAL
- I PR COMBINATION CURB AND GUTTER, TYPE M6.06
- J PR CONCRETE MEDIAN SURFACE, 4"
- K PR EXCAVATING AND GRADING EXISTING SHOULDER (SPECIAL)
- L PR CORRUGATED MEDIAN REMOVAL
- M PR CORRUGATED MEDIAN
- N PR GRADING AND SHAPING SHOULDER
- O PR SUBBASE GRANULAR MATERIAL, TYPE B

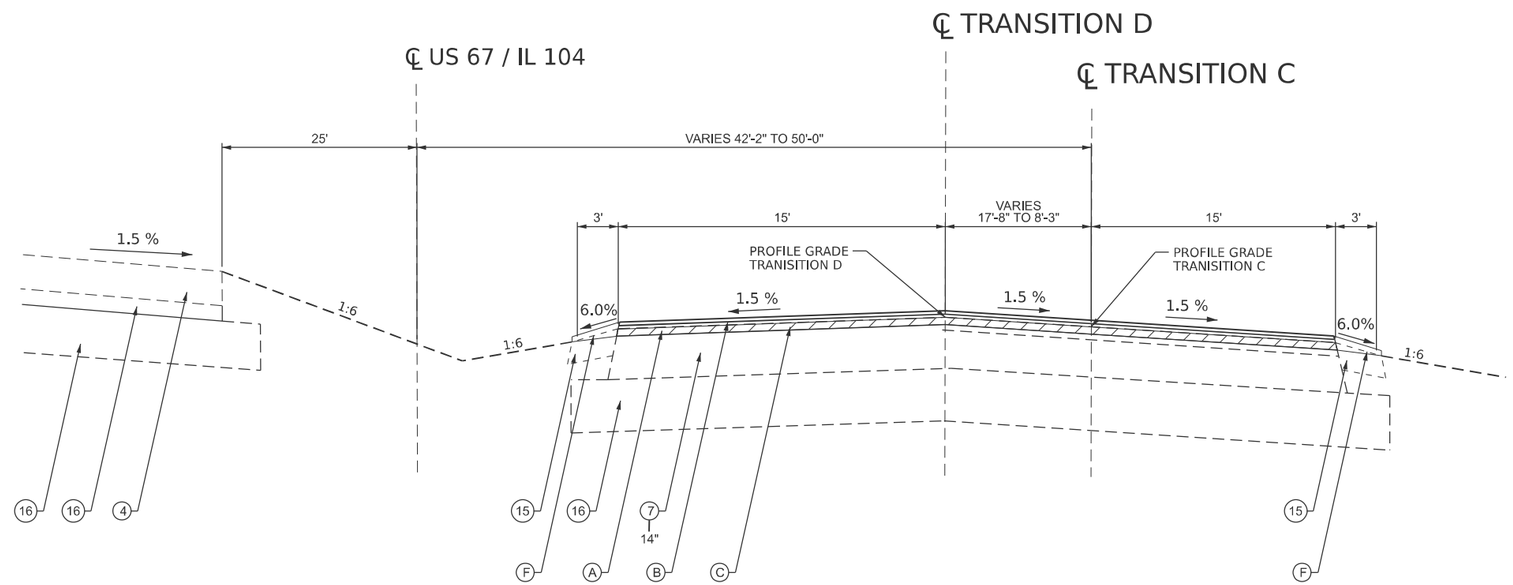

TYPICAL SECTION FAP 310 (US 67/IL 104) WITH TRANSITION C & TRANSITION D

STA 1138+12.30 TO STA 1140+00.00 FAP 310
STA 11+30.68 TO STA 13+19.17 TRANSITION D
STA 54+12.36 TO STA 56+00.23 TRANSITION C

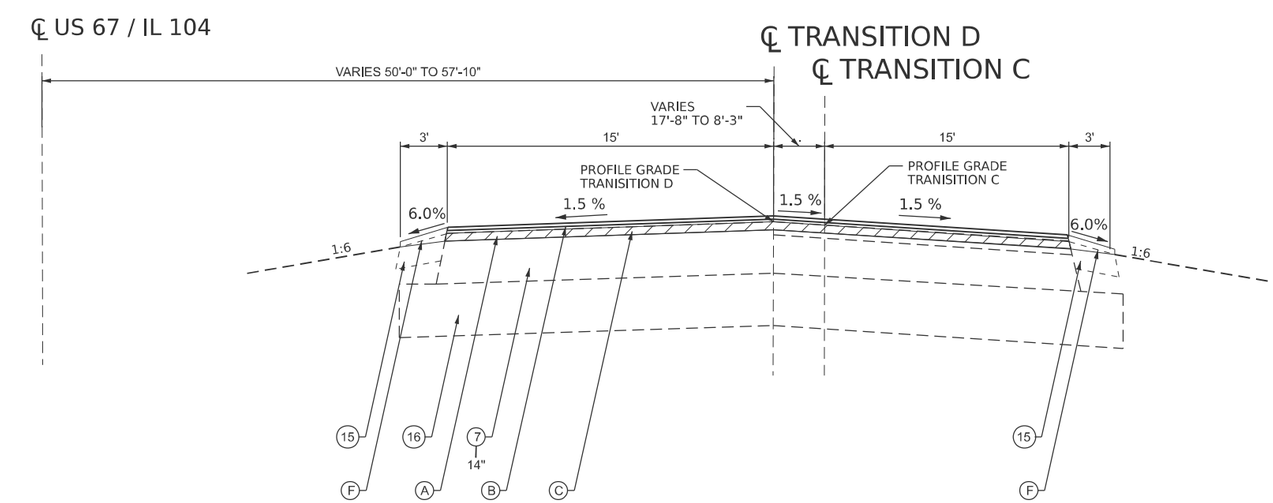

TYPICAL SECTION TRANSITION C & TRANSITION D

STA 1140+00.00 TO STA 1141+35.20 FAP 310
STA 13+19.17 TO STA 14+54.93 TRANSITION D
STA 56+00.23 TO STA 57+35.65 TRANSITION C

MODEL: Page 45 [Sheet]
FILE NAME: c:\pw_work\pwidot\carl.johnson@illinois.gov\d0858453\D672263 Sht - Typicals.dgn

USER NAME = carl.johnson	DESIGNED -	REVISED -	
	DRAWN -	REVISED -	
	CHECKED -	REVISED -	
PLOT DATE = 4/3/2025	DATE -	REVISED -	

STATE OF ILLINOIS
DEPARTMENT OF TRANSPORTATION

TYPICAL SECTIONS

SCALE: | SHEET 13 OF 15 SHEETS | STA. TO STA.

F.A.P RTE.	SECTION	COUNTY	TOTAL SHEETS	SHEET NO.
*	(1115BDR, 116SR)RS-5, 124RS-8	MORGAN	69	20
		CONTRACT NO. 72263		
	ILLINOIS	FED. AID PROJECT		

*US 67 / IL 100 / IL 104

LEGEND

1. EXISTING P.C.C. PAVEMENT, 9"-6"-9"
2. EXISTING P.C.C. BASE COURSE, 8"
3. EXISTING P.C.C. PAVEMENT, 8" WITH REINFORCEMENT
4. EXISTING P.C.C. PAVEMENT, 10"
5. EXISTING P.C.C. WIDENING
6. EXISTING P.C.C. SHOULDERS, 10"
7. EXISTING BITUMINOUS CONCRETE
8. EXISTING BITUMINOUS CONCRETE BASE COURSE,10"
9. EXISTING BITUMINOUS SHOULDER SUPERPAVE, 2.25"
10. EXISTING BITUMINOUS SHOULDER, 6"
11. EXISTING BITUMINOUS SHOULDER, 8"
12. POLYMERIZED STON MATRIX ASPHALT, SUPERPAVE, 1.5"
13. EXISTING HMA SHOULDER, 10.25"
14. EXISTING HMA SHOULDER, 10.5"
15. EXISTING AGGREGATE SHOULDER
16. EXISTING STABALIZED SUB-BASE
17. EXISTING SUB-BASE GRANULAR MATERIAL
18. EXISTING SUB-BASE GRANULAR MATERIAL, 4"
19. EXISTING SMOOTH BAR, 3/4"
20. EXISTING TIE BAR, 1/2"
21. EXISTING P.C.C. MEDIAN SURFACE, 4"
22. EXISTING CORRUGATED P.C. CONCRETE MEDIAN
23. EXISTING BAM SHOULDER, 2.5"
24. EXISITING UNDERDRAINS, 6"

- A. PR HMA SURFACE REMOVAL, 1.5"
- B. PR POLYMERIZED HMA SURFACE COURSE, MIX C, N50, 1.5"
- C. PR HMA BINDER COURSE, N50, 2.25"
- D. PR HMA SHOULDER TOP LIFT, N50, 1.5"
- E. PR HMA SHOULDER LOWER LIFT, N50
- F. PR AGGREGATE WEDGE SHOULDER, TYPE B
- G. PR CONCRETE MEDIAN SURFACE REMOVAL
- H. PR COMBINATION CURB AND GUTTER REMOVAL
- I. PR COMBINATION CURB AND GUTTER, TYPE M6.06
- J. PR CONCRETE MEDIAN SURFACE, 4"
- K. PR EXCAVATING AND GRADING EXISTING SHOULDER (SPECIAL)
- L. PR CORRUGATED MEDIAN REMOVAL
- M. PR CORRUGATED MEDIAN
- N. PR GRADING AND SHAPING SHOULDER
- O. PR SUBBASE GRANULAR MATERIAL, TYPE B

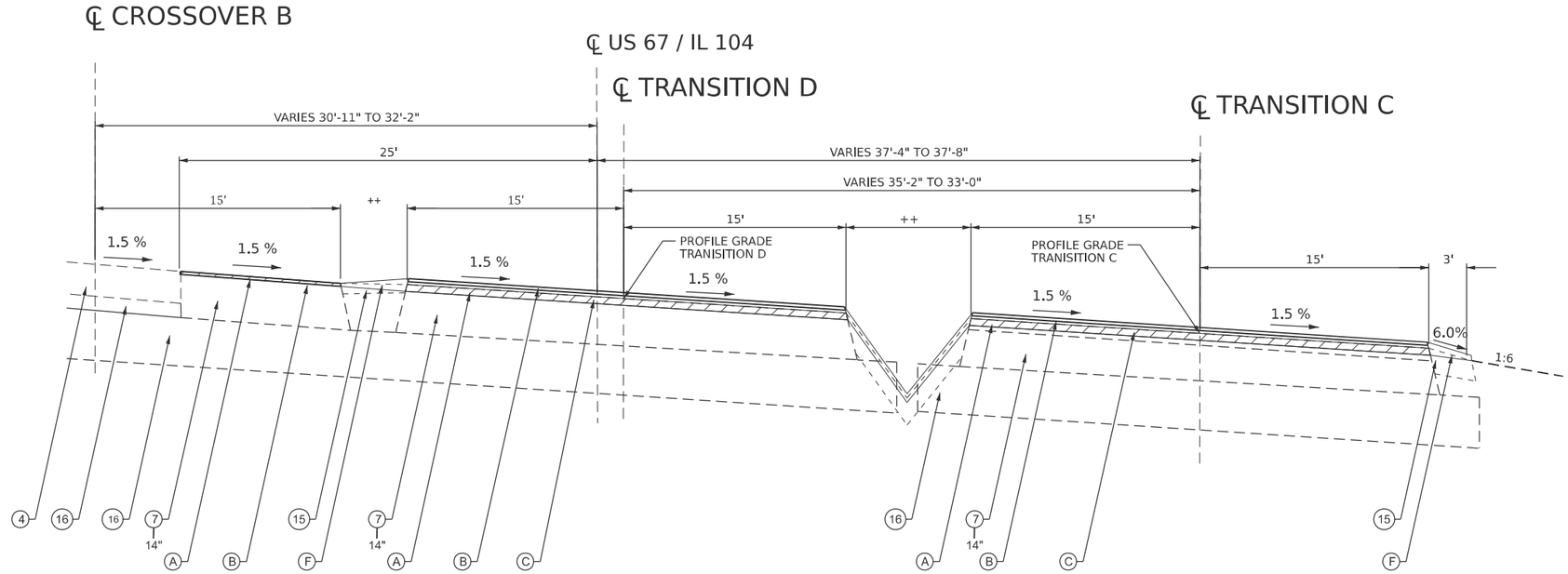

TYPICAL SECTION FAP 310 (US 67/IL 104) WITH CROSSOVER B & TRANSITION C & TRANSITION D

STA 1135+67.67 TO STA 1135+93.63 FAP 310
STA 28+63.82 TO STA 28+89.81 CROSSOVER B
STA 8+85.03 TO STA 9+11.09 TRANSITION D
STA 51+67.67 TO STA 51+93.63 TRANSITION C

NOTE:
TRANSITION ALONG TRANSITION D FROM 3.25" DESIGN OVERLAY TO 1.5" REPAVING STA 8+93.92 TO STA 9+38.92

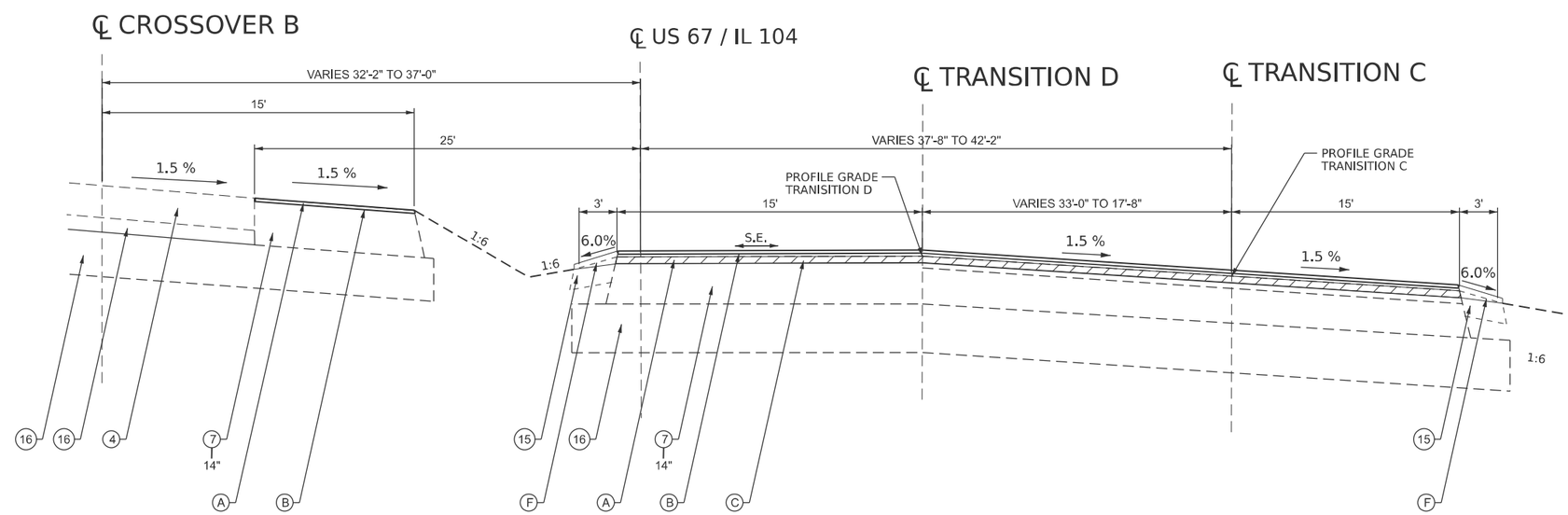

TYPICAL SECTION FAP 310 (US 67/IL 104) WITH CROSSOVER B & TRANSITION C & TRANSITION D

STA 1135+93.63 TO STA 1138+12.30 FAP 310
STA 28+89.81 TO STA 31+08.55 CROSSOVER B
STA 9+11.09 TO STA 11+30.68 TRANSITION D
STA 51+93.63 TO STA 54+12.36 TRANSITION C

NOTE:
TRANSITION ALONG TRANSITION D FROM 3.25" DESIGN OVERLAY TO 1.5" REPAVING STA 8+93.92 TO STA 9+38.92

MODEL: Page 46 [Sheet]
FILE NAME: c:\pw_work\pwidot\carl.johnson@illinois.gov\d0858453\D672263 Sht - Typicals.dgn

USER NAME = carl.johnson	DESIGNED -	REVISED -	
	DRAWN -	REVISED -	
	CHECKED -	REVISED -	
PLOT DATE = 4/3/2025	DATE -	REVISED -	

STATE OF ILLINOIS
DEPARTMENT OF TRANSPORTATION

TYPICAL SECTIONS

SCALE: | SHEET 12 OF 15 SHEETS | STA. | TO STA.

F.A.P RTE.	SECTION	COUNTY	TOTAL SHEETS	SHEET NO.
*	(1115BDR, 116SR)RS-5, 124RS-8	MORGAN	69	21
		CONTRACT NO. 72263		
		ILLINOIS	FED. AID PROJECT	

*US 67 / IL 100 / IL 104

LEGEND

1. EXISTING P.C.C. PAVEMENT, 9"-6"-9"
2. EXISTING P.C.C. BASE COURSE, 8"
3. EXISTING P.C.C. PAVEMENT, 8" WITH REINFORCEMENT
4. EXISTING P.C.C. PAVEMENT, 10"
5. EXISTING P.C.C. WIDENING
6. EXISTING P.C.C. SHOULDERS, 10"
7. EXISTING BITUMINOUS CONCRETE
8. EXISTING BITUMINOUS CONCRETE BASE COURSE,10"
9. EXISTING BITUMINOUS SHOULDER SUPERPAVE, 2.25"
10. EXISTING BITUMINOUS SHOULDER, 6"
11. EXISTING BITUMINOUS SHOULDER, 8"
12. POLYMERIZED STON MATRIX ASPHALT, SUPERPAVE, 1.5"
13. EXISTING HMA SHOULDER, 10.25"
14. EXISTING HMA SHOULDER, 10.5"
15. EXISTING AGGREGATE SHOULDER
16. EXISTING STABALIZED SUB-BASE
17. EXISTING SUB-BASE GRANULAR MATERIAL
18. EXISTING SUB-BASE GRANULAR MATERIAL, 4"
19. EXISTING SMOOTH BAR, 3/4"
20. EXISTING TIE BAR, 1/2"
21. EXISTING P.C.C. MEDIAN SURFACE, 4"
22. EXISTING CORRUGATED P.C. CONCRETE MEDIAN
23. EXISTING BAM SHOULDER, 2.5"
24. EXISISTING UNDERDRAINS, 6"

- A PR HMA SURFACE REMOVAL, 1.5"
- B PR POLYMERIZED HMA SURFACE COURSE, MIX C, N50, 1.5"
- C PR HMA BINDER COURSE, N50, 2.25"
- D PR HMA SHOULDER TOP LIFT, N50, 1.5"
- E PR HMA SHOULDER LOWER LIFT, N50
- F PR AGGREGATE WEDGE SHOULDER, TYPE B
- G PR CONCRETE MEDIAN SURFACE REMOVAL
- H PR COMBINATION CURB AND GUTTER REMOVAL
- I PR COMBINATION CURB AND GUTTER, TYPE M6.06
- J PR CONCRETE MEDIAN SURFACE, 4"
- K PR EXCAVATING AND GRADING EXISTING SHOULDER (SPECIAL)
- L PR CORRUGATED MEDIAN REMOVAL
- M PR CORRUGATED MEDIAN
- N PR GRADING AND SHAPING SHOULDER
- O PR SUBBASE GRANULAR MATERIAL, TYPE B

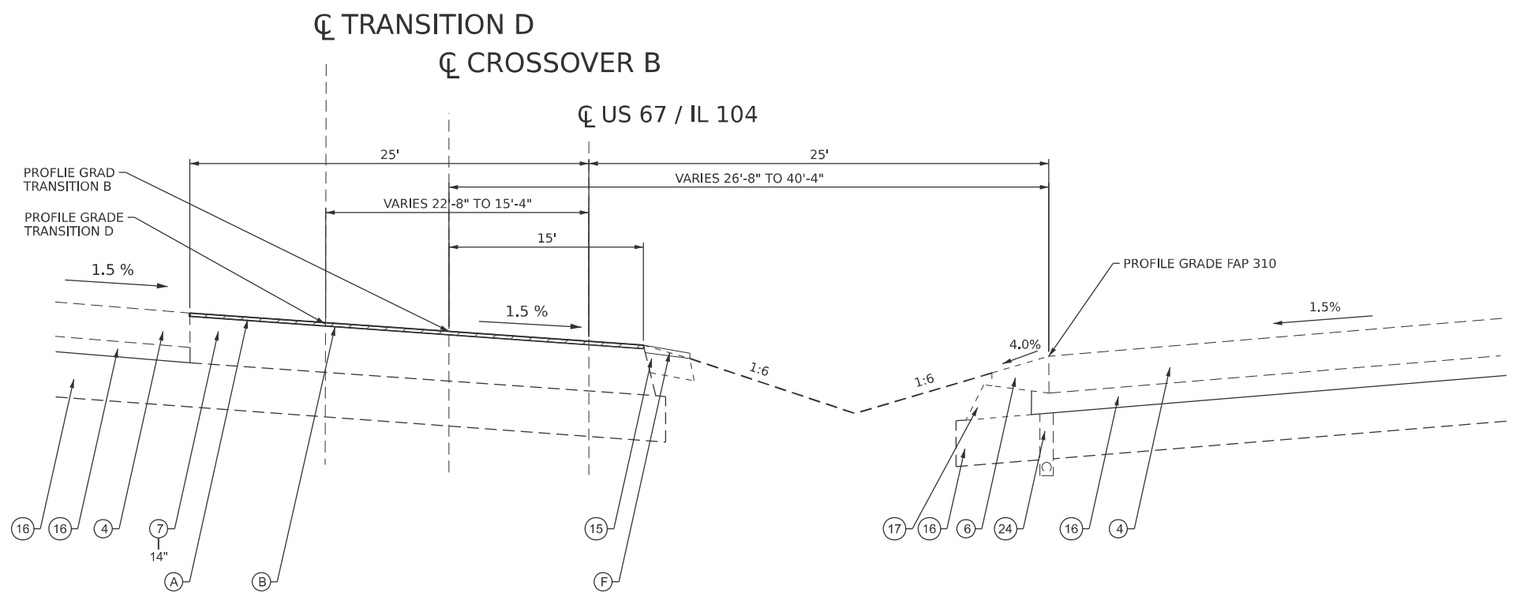

TYPICAL SECTION FAP 310 (US 67/IL 104) WITH CROSSOVER B & TRANSITION C & TRANSITION D

STA 1132+18.86 TO STA 1133+50 FAP 310
STA 25+13.72 TO STA 26+45.57 CROSSOVER B
STA 5+35.31 TO STA 6+66.69 TRANSITION D

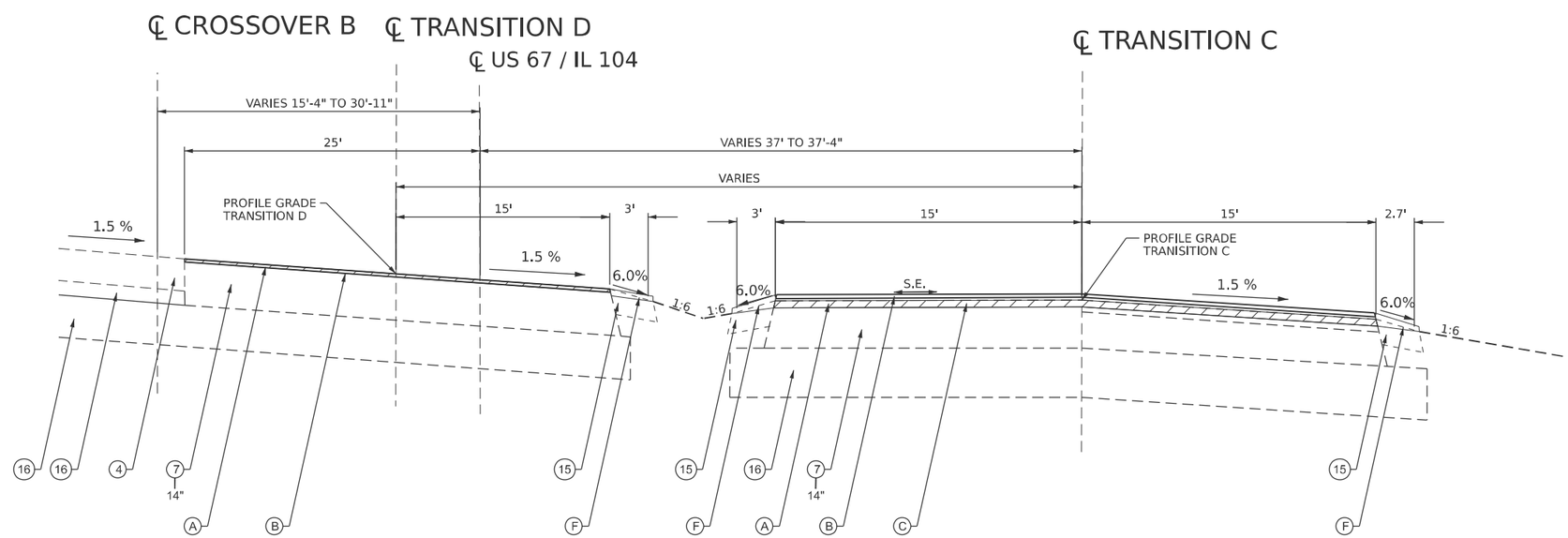

TYPICAL SECTION FAP 310 (US 67/IL 104) WITH CROSSOVER B & TRANSITION C & TRANSITION D

STA 1133+50 TO STA 1135+67.67 FAP 310
STA 26+45.57 TO STA 28+63.82 CROSSOVER B
STA 6+66.69 TO STA 8+85.03 TRANSITION D
STA 49+50.00 TO STA 51+67.67 TRANSITION C

MODEL: Page 47 [Sheet]
FILE NAME: c:\pw_work\pwidot\carl.johnson@illinois.gov\d0858453\D672263 Sht - Typicals.dgn

USER NAME = carl.johnson	DESIGNED -	REVISED -	
	DRAWN -	REVISED -	
	CHECKED -	REVISED -	
PLOT DATE = 4/3/2025	DATE -	REVISED -	

STATE OF ILLINOIS
DEPARTMENT OF TRANSPORTATION

TYPICAL SECTIONS

SCALE: | SHEET 11 OF 15 SHEETS | STA. | TO STA.

F.A.P RTE.	SECTION	COUNTY	TOTAL SHEETS	SHEET NO.
*	(1115BDR, 116SR)RS-5, 124RS-8	MORGAN	69	22
		CONTRACT NO. 72263		
		ILLINOIS FED. AID PROJECT		

*US 67 / IL 100 / IL 104

LEGEND

1. EXISTING P.C.C. PAVEMENT, 9"-6"-9"
2. EXISTING P.C.C. BASE COURSE, 8"
3. EXISTING P.C.C. PAVEMENT, 8" WITH REINFORCEMENT
4. EXISTING P.C.C. PAVEMENT, 10"
5. EXISTING P.C.C. WIDENING
6. EXISTING P.C.C. SHOULDERS, 10"
7. EXISTING BITUMINOUS CONCRETE
8. EXISTING BITUMINOUS CONCRETE BASE COURSE,10"
9. EXISTING BITUMINOUS SHOULDER SUPERPAVE, 2.25"
10. EXISTING BITUMINOUS SHOULDER, 6"
11. EXISTING BITUMINOUS SHOULDER, 8"
12. POLYMERIZED STON MATRIX ASPHALT, SUPERPAVE, 1.5"
13. EXISTING HMA SHOULDER, 10.25"
14. EXISTING HMA SHOULDER, 10.5"
15. EXISTING AGGREGATE SHOULDER
16. EXISTING STABALIZED SUB-BASE
17. EXISTING SUB-BASE GRANULAR MATERIAL
18. EXISTING SUB-BASE GRANULAR MATERIAL, 4"
19. EXISTING SMOOTH BAR, 3/4"
20. EXISTING TIE BAR, 1/2"
21. EXISTING P.C.C. MEDIAN SURFACE, 4"
22. EXISTING CORRUGATED P.C. CONCRETE MEDIAN
23. EXISTING BAM SHOULDER, 2.5"
24. EXISISTING UNDERDRAINS, 6"

- A PR HMA SURFACE REMOVAL, 1.5"
- B PR POLYMERIZED HMA SURFACE COURSE, MIX C, N50, 1.5"
- C PR HMA BINDER COURSE, N50, 2.25"
- D PR HMA SHOULDER TOP LIFT, N50, 1.5"
- E PR HMA SHOULDER LOWER LIFT, N50
- F PR AGGREGATE WEDGE SHOULDER, TYPE B
- G PR CONCRETE MEDIAN SURFACE REMOVAL
- H PR COMBINATION CURB AND GUTTER REMOVAL
- I PR COMBINATION CURB AND GUTTER, TYPE M6.06
- J PR CONCRETE MEDIAN SURFACE, 4"
- K PR EXCAVATING AND GRADING EXISTING SHOULDER (SPECIAL)
- L PR CORRUGATED MEDIAN REMOVAL
- M PR CORRUGATED MEDIAN
- N PR GRADING AND SHAPING SHOULDER
- O PR SUBBASE GRANULAR MATERIAL, TYPE B

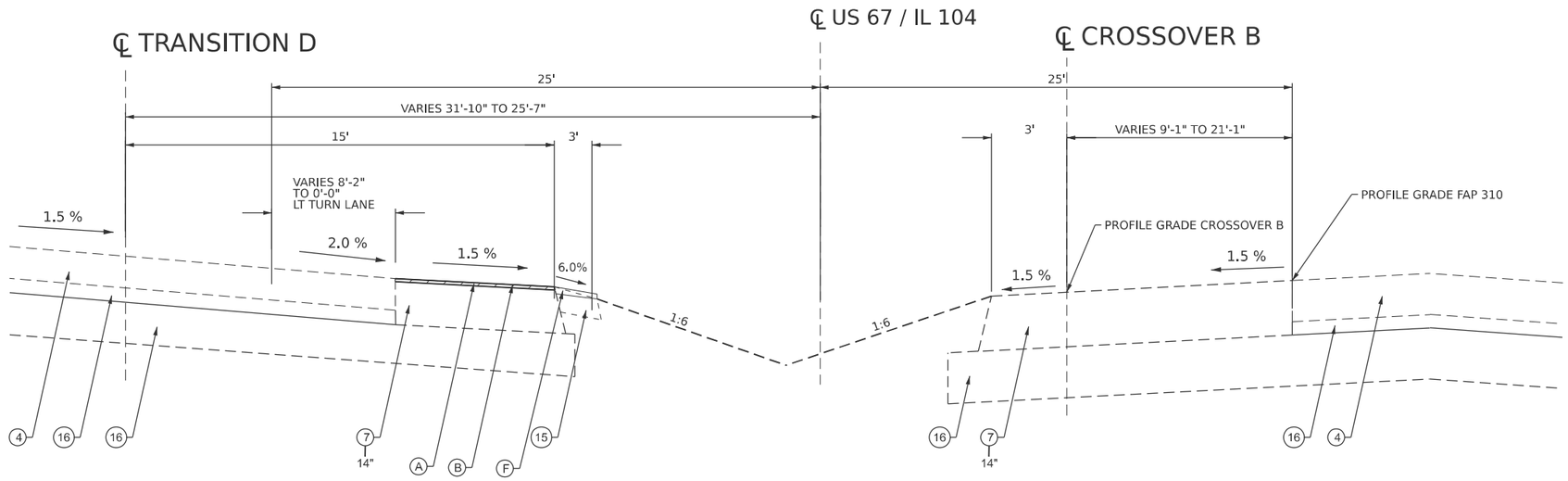

TYPICAL SECTION FAP 310 (US 67/IL 104) WITH CROSSOVER B & TRANSITION D

STA 1130+05.25 TO STA 1131+62.23 FAP 310
STA 22+99.37 TO STA 24+56.81 CROSSOVER B
STA 3+21.51 TO STA 4+78.61 TRANSITION D

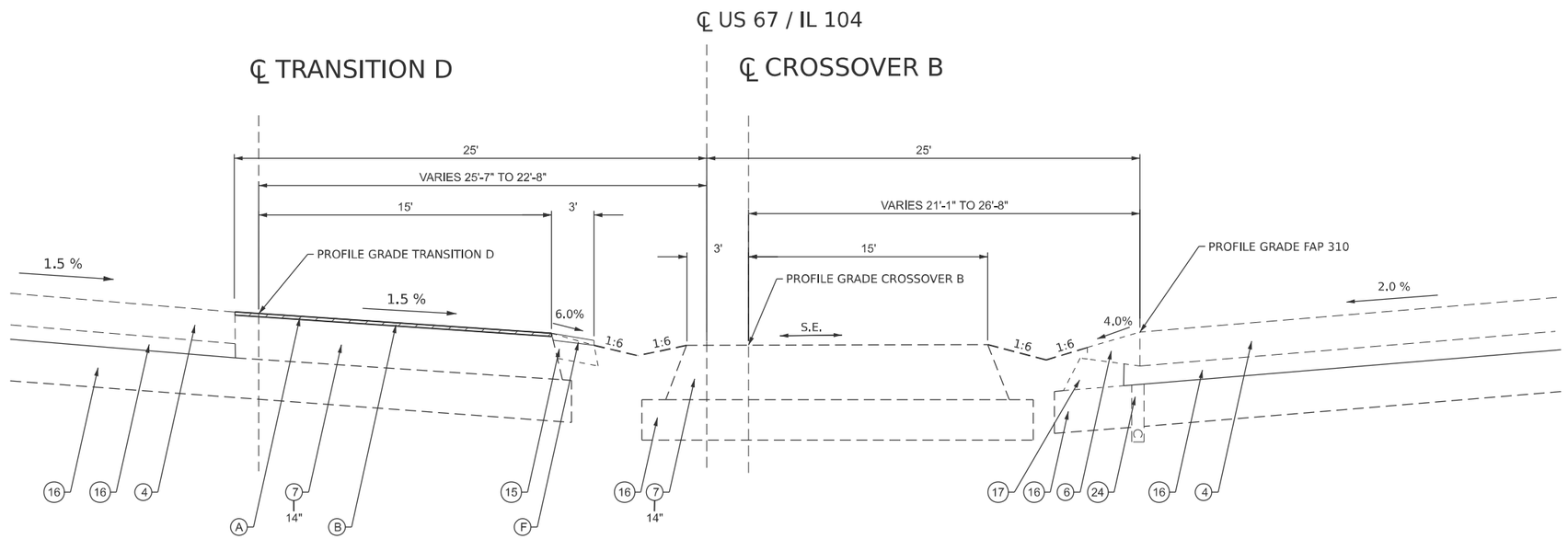

TYPICAL SECTION FAP 310 (US 67/IL 104) WITH CROSSOVER B & TRANSITION D

STA 1131+62.23 TO STA 1132+18.86 FAP 310
STA 24+56.81 TO 25+13.72 CROSSOVER B
STA 4+78.61 TO STA 5+35.31 TRANSITION D

MODEL: Page 48 [Sheet]
FILE NAME: c:\pw_work\pwidot\carl.johnson@illinois.gov\d0858453\D672263 Sht - Typicals.dgn

USER NAME = carl.johnson	DESIGNED -	REVISED -	STATE OF ILLINOIS DEPARTMENT OF TRANSPORTATION
	DRAWN -	REVISED -	
	CHECKED -	REVISED -	
PLOT DATE = 4/3/2025	DATE -	REVISED -	

TYPICAL SECTIONS

SCALE: | SHEET 10 OF 15 SHEETS | STA. | TO STA.

F.A.P RTE.	SECTION	COUNTY	TOTAL SHEETS	SHEET NO.
*	(1115BDR, 116SR)RS-5, 124RS-8	MORGAN	69	23

CONTRACT NO. 72263

ILLINOIS | FED. AID PROJECT

*US 67 / IL 100 / IL 104

PAVING SCHEDULE

LOCATION			TOTAL MAINLINE WIDTH	TOTAL SHOULDER WIDTH	LENGTH	DESCRIPTION	40603080 HOT-MIX ASPHALT BINDER COURSE	40604150 POLYMERIZED HOT-MIX ASPHALT SURFACE COURSE	48203023 HOT-MIX ASPHALT SHOULDERS, 6 1/2"	48203100 HOT-MIX ASPHALT SHOULDERS	40600290 BITUMINOUS MATERIALS (TACK COAT)	40600370 LONGITUDINAL JOINT SEALANT	64200108 RUMBLE STRIP	40600982 HOT-MIX ASPHALT SURFACE REMOVAL - BUTT JOINT	44000155 HOT-MIX ASPHALT SURFACE REMOVAL, 1 1/2"
			(FOOT)	(FOOT)	(FOOT)		(TON)	(TON)	(SQ YD)	(TON)	(POUND)	(FOOT)	(FOOT)	(SQ YD)	(SQ YD)
US 67															
STA 558+00.7	TO	STA 558+45.7	22.0	0.0	45.0	BUTT JOINT	13.9	9.2	0.0	0.0	74.3	45.0	0.0	110.0	0.0
STA 558+45.7	TO	STA 559+26.6	VARIABLE	0.0	80.9	INTERSECTION	40.0	26.7	0.0	0.0	214.5	80.9	0.0	0.0	317.8
STA 559+26.6	TO	STA 660+31.6	22.0	8.0	10105.0	MAINLINE & NEW SHOULDERS	3112.3	2074.9	8982.2	754.5	18694.3	10105.0	20210.0	0.0	24701.1
STA 660+31.6	TO	STA 660+83.8	22.0	8.0	52.2	BRIDGE BUTT JOINT	145.3	96.9	46.4	39.0	96.6	45.0	104.4	1153.0	0.0
STA 662+45.3	TO	STA 662+95.7	24.0	8.0	50.4	BRIDGE BUTT JOINT	22.6	15.1	0.0	56.4	121.3	45.0	100.8	179.7	0.0
STA 662+95.7	TO	STA 666+00	24.0	8.0	304.3	MAINLINE & SHOULDERS	136.3	90.9	0.0	340.8	730.3	304.3	608.6	0.0	1082.0
STA 666+00	TO	STA 690+08.2	22.0	8.0	2408.2	MAINLINE & NEW SHOULDERS	741.7	494.5	2140.6	179.8	4455.2	2408.2	4816.4	1.0	5886.7
STA 690+08.2	TO	STA 691+59.8	VARIABLE	0.0	151.6	INTERSECTION	114.8	76.5	0.0	0.0	614.8	151.6	0.0	0.0	1366.2
STA 691+59.8	TO	STA 708+93.6	22.0	8.0	1733.8	MAINLINE & NEW SHOULDERS	534.0	356.0	1541.2	129.5	3207.5	1733.8	3467.6	0.0	4238.2
STATION EQUATION STA 708+93.6 BK = STA 136+23.41 AH															
STA 136+23.41	TO	STA 140+96.7	22.0	8.0	466.1	MAINLINE & NEW SHOULDERS	143.6	95.7	414.3	34.8	862.3	466.1	932.2	0.0	1139.4
STA 140+96.7	TO	STA 148+74.07	24.0	8.0	777.4	MAINLINE & SHOULDERS	261.2	174.1	0.0	87.1	1710.3	777.4	0.0	0.0	2764.1
STA 148+74.07	TO	STA 150+89.0	VARIABLE	8.0	214.9	MAINLINE & SHOULDERS	75.1	50.1	0.0	24.1	2313.4	214.9	0.0	0.0	596.2
STA 150+89.0	TO	STA 151+34.0	VARIABLE	8.0	45.0	BUTT JOINT	16.6	11.1	0.0	5.0	98.1	45.0	0.0	132.0	0.0
STA 151+34.0	TO	STA 157+49.5	VARIABLE	8.0	615.5	MAINLINE, SHOULDERS, & MEDIAN	335.9	224.0	0.0	68.9	2045.9	615.5	0.0	0.0	2666.2
STA 157+49.5	TO	STA 160+03.4	VARIABLE	8.0	253.9	INTERSECTION US 67 / IL 104	307.4	205.0	0.0	28.4	1766.7	389.8	0.0	0.0	2440.0
STA 160+03.4	TO	STA 170+76	VARIABLE	8.0	1130.8	MAINLINE & SHOULDERS	629.8	419.9	0.0	126.6	3826.5	1130.8	0.0	0.0	4998.8
STA 170+76	TO	STA 171+21	VARIABLE	8.0	45.0	BUTT JOINT	17.6	11.7	0.0	5.0	103.3	45.0	0.0	139.7	0.0
STA 171+21	TO	STA 172+33.7	VARIABLE	8.0	99.7	INTERSECTION	60.5	40.3	0.0	11.2	369.5	99.7	0.0	0.0	480.0
STA 172+33.7	TO	STA 190+36.7	24.0	8.0	1803.0	MAINLINE & SHOULDERS	605.8	403.9	0.0	201.9	3966.6	1803.0	0.0	0.0	6410.7
STA 190+36.7	TO	STA 191+99	24.0	16.0	162.3	MAINLINE & SHOULDERS	54.5	36.4	0.0	36.4	422.0	162.3	0.0	0.0	721.3
STA 191+99	TO	STA 192+49.7	24.0	16.0	50.7	BUTT JOINT	17.0	11.3	0.0	11.4	114.6	45.0	0.0	135.1	0.0
STA 193+80.4	TO	STA 194+30.7	24.0	16.0	50.3	BUTT JOINT	17.4	11.6	0.0	11.3	114.4	45.0	50.3	137.8	0.0
STA 194+30.7	TO	STA 195+76.6	24.0	16.0	145.9	MAINLINE & SHOULDERS	49.0	32.7	0.0	32.7	379.3	145.9	0.0	0.0	648.4
STA 195+76.6	TO	STA 204+26.8	VARIABLE	8.0	950.2	MAINLINE & SHOULDERS	475.9	317.2	0.0	106.4	2929.3	950.2	0.0	0.0	3776.7
STA 204+26.8	TO	STA 207+83.4	VARIABLE	8.0	356.6	INTERSECTION US 67/ IL 100	440.4	293.6	0.0	39.9	2541.3	356.6	0.0	0.0	3495.4
STA 207+83.4	TO	STA 212+68.65	VARIABLE	8.0	485.3	MAINLINE & SHOULDERS	312.6	208.4	0.0	54.3	1868.6	485.3	0.0	0.0	2480.8
STATION EQUATION STA 212+68.65 BK – STA 212+99.99 AH															
STA 212+99.99	TO	STA 220+00	VARIABLE	8.0	700.0	MAINLINE & SHOULDERS	395.4	263.6	0.0	78.4	2398.3	700.0	0.0	0.0	3138.1
STA 212+68.65	TO	STA 262+93.2	36.0	8.0	4293.2	MAINLINE & SHOULDERS	2163.8	1442.5	0.0	480.8	13308.9	4293.2	0.0	0.0	20989.0
STA 262+93.2	TO	STA 267+93.2	VARIABLE	8.0	500.0	MAINLINE & SHOULDERS	210.0	140.0	0.0	56.0	1325.0	500.0	0.0	0.0	2111.1
STA 267+93.2	TO	STA 271+86.6	24.0	8.0	393.4	MAINLINE & SHOULDERS	132.2	88.1	0.0	44.1	865.5	393.4	0.0	0.0	1398.8
STATION EQUATION STA 271+86.60 BK = STA 273+79.67 AH															
STA 273+79.67	TO	STA 312+19.50	24.0	8.0	3839.8	MAINLINE & SHOULDERS	1290.2	860.1	0.0	430.1	8447.6	3839.8	0.0	0.0	13652.7
POC STA 312+19.50 (EX67) = POT STA 10+85.74 (TRANSC)															
TRANSITION C															
STA 10+85.74	TO	STA 9+15.75	30.0	0.0	170.0	MAINLINE TRANSITION C	71.4	47.6	0.0	0.0	382.5	170.0	0.0	0.0	566.6
POT STA 17+24.96 (TRANSD) = PT STA 9+15.75 (TRANSC)															
STA 9+15.75	TO	STA 0+00.00	30.0	0.0	915.8	MAINLINE TRANSITION C	384.6	256.4	0.0	0.0	2060.4	915.8	0.0	0.0	3052.5
POT STA 1134+89.60 @ 37.0' RT (P67) = PC STA 0+00.00 (TRANSC)															
TRANSITION D															
STA 17+24.96	TO	STA 9+38.9	VARIES	0.0	786.1	MAINLINE TRANSITION D	113.3	75.5	0.0	0.0	606.7	1006.2	0.0	0.0	898.9
STA 9+38.9	TO	STA 8+93.9	VARIES	0.0	45.0	BUTT JOINT	19.6	58.9	0.0	0.0	105.1	72.7	0.0	155.7	0.0
STA 8+93.9	TO	STA 3+21.0	VARIES	0.0	328.2	MAINLINE TRANSITION D	0.0	1070.4	0.0	0.0	8601.7	1210.6	0.0	0.0	12743.2
P67															
STA 1134+89.60	TO	STA 1133+13.5	VARIES	0.0	94.6	MAINLINE P67	46.2	30.8	0.0	0.0	247.5	94.6	0.0	0.0	366.7
STA 1133+86.5		STA 1133+50	VARIES	0.0	45.0	BUTT JOINT	23.3	7.8	0.0	0.0	124.8	45.0	0.0	184.8	0.0
IL 100															
STA 1+87.3	TO	STA 6+12.8	VARIABLE	8.0	425.5	MAINLINE & SHOULDERS	168.6	112.4	0.0	47.7	1073.4	0.0	0.0	0.0	1716.3
STA 6+12.8	TO	STA 7+90.0	VARIABLE	8.0	177.2	INTERSECTION	120.8	80.5	0.0	19.8	718.1	177.2	0.0	0.0	1143.4
STA 7+90.0	TO	STA 14+51.92	VARIABLE	8.0	661.9	MAINLINE & SHOULDERS	262.0	244.3	0.0	74.1	2228.3	661.9	0.0	0.0	2667.4
STATION EQUATION STA 14+51.92 BK = STA 21+11.26 AH															
STA 21+11.3	TO	STA 24+55.1	VARIABLE	8.0	343.8	MAINLINE & SHOULDERS	135.7	90.5	0.0	38.5	864.6	343.8	0.0	0.0	1077.1
STA 24+55	TO	STA 25+00	VARIABLE	8.0	45.0	BUTT JOINT	16.8	11.2	0.0	5.0	107.8	45.0	0.0	133.0	0.0
SPUNKY RIDGE ROAD															
STA 10+95.0	TO	STA 11+45.0	20.0	0.0	50.0	BUTT JOINT	14.0	9.3	0.0	0.0	75.0	50.0	0.0	111.1	0.0
						TOTAL	**14249.2**	**10677.6**	**13124.7**	**3660.1**	**97181.9**	**37215.4**	**30290.3**	**2573.0**	**135731.7**

MODEL: Schedule of Quantities-01 [Sheet]
FILE NAME: c:\pw_work\pwidot\carl.johnson@illinois.gov\d0858453\D672263 Sht - Schedule of Quantities.dgn

USER NAME = carl.johnson	DESIGNED -	REVISED -	
	DRAWN -	REVISED -	
	CHECKED -	REVISED -	
PLOT DATE = 4/3/2025	DATE -	REVISED -	

STATE OF ILLINOIS
DEPARTMENT OF TRANSPORTATION

SCHEDULE OF QUANTITIES

SCALE: | SHEET 1 OF 6 SHEETS | STA. | TO STA.

F.A.P RTE.	SECTION	COUNTY	TOTAL SHEETS	SHEET NO.
*	(1115BDR, 116SR)RS-5, 124RS-8	MORGAN	69	24
		CONTRACT NO. 72263		
	ILLINOIS	FED. AID PROJECT		

*US 67 / IL 100 / IL 104

AGGREGATE SHOULDERS

LOCATION			DESCRIPTION	LENGTH (FOOT)	48102100 AGGREGATE WEDGE SHOULDERS, TYPE B (TON)
	US 67				
RT STA 658+86.7	TO	RT STA 660+08.5	2 WAY ROAD GUARDRAIL	121.7	3.8
LT STA 658+86.7	TO	LT STA 660+41.7	2 WAY ROAD GUARDRAIL	102.1	3.2
RT STA 660+32.3	TO	RT STA 660+83.8	2 WAY ROAD GUARDRAIL	51.5	1.6
RT STA 662+52.9	TO	RT STA 663+25.2	2 WAY ROAD GUARDRAIL	72.3	2.3
LT STA 662+82.4	TO	LT STA 663+84.8	2 WAY ROAD GUARDRAIL	102.4	3.2
RT STA 663+49.5	TO	RT STA 665+13.6	2 WAY ROAD GUARDRAIL	164.1	5.2
STATION EQUATION STA 709+93.6 BK = STA 136+29.00 AH					
RT STA 140+96.7	TO	RT STA 144+10.3	2 WAY ROAD	313.6	9.9
LT STA 140+96.7	TO	LT STA 143+28.8	2 WAY ROAD	232.1	7.3
LT STA 143+60.6	TO	LT STA 143+97.4	2 WAY ROAD	36.8	1.2
RT STA 144+34.4	TO	RT STA 157+49.5	2 WAY ROAD	1315.1	41.4
LT STA 144+45.1	TO	LT STA 157+49.5	2 WAY ROAD	1304.4	41.1
STA 157+49.5	TO	STA 160+03.4	US 67 / IL 104 INTERSECTION	353.9	17.2
RT STA 160+03.4	TO	RT STA 171+43.6	2 WAY ROAD	1144.5	36.0
LT STA 160+03.4	TO	LT STA 171+33.8	2 WAY ROAD	1125.3	35.4
LT STA 171+33.8	TO	LT STA 172+33.7	SIDE ROAD	99.9	3.8
RT STA 171+67.6	TO	RT STA 180+35.3	2 WAY ROAD	867.7	27.3
LT STA 172+33.7	TO	LT STA 173+80.6	2 WAY ROAD	146.9	4.6
LT STA 174+25.8	TO	LT STA 190+66.8	2 WAY ROAD	1641.0	51.7
RT STA 180+94.3	TO	RT STA 192+40.2	2 WAY ROAD	1145.9	36.1
LT STA 190+90.9	TO	LT STA 192+59.4	2 WAY ROAD	168.5	5.3
RT STA 193+70.9	TO	RT STA 196+87.7	2 WAY ROAD	316.8	10.0
LT STA 193+89.4	TO	LT STA 204+26.8	2 WAY ROAD	1037.4	32.7
RT STA 197+08.4	TO	RT STA 204+26.8	2 WAY ROAD	718.4	22.6
STA 204+26.8	TO	STA 207+83.4	US 67 / IL 100 INTERSECTION	356.6	26.7
RT STA 207+83.4	TO	RT STA 212+68.65	2 WAY ROAD	485.3	15.3
LT STA 207+83.4	TO	LT STA 211+63.7	2 WAY ROAD	380.3	12.0
LT STA 211+79.7	TO	LT STA 212+68.65	2 WAY ROAD	89.0	2.8
STATION EQUATION STA 212+68.65 BK = STA 212+99.99 AH					
RT STA 212+99.99	TO	RT STA 233+66.6	2 WAY ROAD	2066.6	65.1
LT STA 212+99.99	TO	LT STA 233+00.5	2 WAY ROAD	2000.51	63.0
LT STA 233+24.6	TO	LT STA 239+56.2	2 WAY ROAD	631.6	19.9
RT STA 233+76.6	TO	RT STA 242+89.2	2 WAY ROAD	912.6	28.7
LT STA 240+35.2	TO	LT STA 243+15.3	2 WAY ROAD	280.1	8.8
RT STA 243+37.2	TO	RT STA 246+16.9	2 WAY ROAD	279.7	8.8
LT STA 243+66.4	TO	LT STA 246+68.6	2 WAY ROAD	302.2	9.5
RT STA 246+64.9	TO	RT STA 264+06.2	2 WAY ROAD	1741.3	54.8
LT STA 247+01.8	TO	LT STA 261+13.1	2 WAY ROAD	1411.3	44.4
LT STA 261+82.6	TO	LT STA 271+86.60	2 WAY ROAD	1004	31.6
RT STA 264+30.2	TO	RT STA 271+86.60	2 WAY ROAD	756.4	23.8
STATION EQUATION STA 271+86.60 BK = STA 273+79.67 AH					
RT STA 273+79.67	TO	RT STA 280+17.3	2 WAY ROAD	637.6	20.1
LT STA 273+79.67	TO	LT STA 279+34.3	2 WAY ROAD	554.6	17.5
LT STA 279+87.7	TO	LT STA 297+96.7	2 WAY ROAD	1809.0	57.0
RT STA 280+33.1	TO	RT STA 283+95.7	2 WAY ROAD	362.6	11.4
RT STA 284+40.6	TO	RT STA 298+04.4	2 WAY ROAD	1363.8	42.9
LT STA 298+20.9	TO	LT STA 305+06.5	2 WAY ROAD	685.6	21.6
RT STA 298+28.2	TO	RT STA 311+51.3	2 WAY ROAD	1323.1	41.7
LT STA 305+30.5	TO	LT STA 307+76.7	2 WAY ROAD	246.2	7.8
LT STA 308+37.8	TO	LT STA 310+81.9	2 WAY ROAD	244.1	7.7
LT STA 311+57.5	TO	LT STA 312+19.50	2 WAY ROAD	62.0	2.0
RT STA 311+75.4	TO	RT STA 312+19.50	2 WAY ROAD	44.1	1.4
POC STA 312+19.50 (EX67) = POT STA 10+85.74 (TRANSC)					
	TRANSITION C				
STA 10+85.74	TO	STA 9+15.75	2 WAY TRANSITION	170.0	10.7
POT STA 17+24.96 (TRANSD) = PT STA 9+15.75 (TRANSC)					
LT STA 9+15.75	TO	LT STA 0+00.00	WEST BOUND SIDE TRANSITION	915.8	28.8
RT STA 1+03.8	TO	RT STA 0+00.00	WEST BOUND SIDE TRANSITION	103.8	3.3
POT STA 1134+89.60 @ 37.0' RT (P67) = PC STA 0+00.00 (TRANSC)					
	TRANSITION D				
RT STA 17+24.96	TO	LT STA 8+93.9	EAST BOUND SIDE OF TRANSITION	831.1	26.2
LT STA 9+12.6	TO	LT STA 6+66.7	EAST BOUND SIDE OF TRANSITION	246.2	7.8
LT STA 5+35.3	TO	LT STA 3+21.0	EAST BOUND SIDE OF TRANSITION	214.3	6.7
	P67				
STA 1134+89.60	TO	STA 1133+50	WEST BOUND SIDE OF TRANSITION	139.6	8.8
	IL 100				
STA 1+87.3	TO	STA 6+12.8	2 WAY ROAD	425.5	26.8
STA 6+12.8	TO	STA 7+43.6	INTERSECTION	130.8	8.2
STA 7+43.6	TO	STA 14+51.92	2 WAY ROAD	661.9	41.7
STATION EQUATION STA 14+51.92 BK = STA 21+11.26 AH					
STA 21+11.26	TO	STA 23+70.9	2 WAY ROAD & BUTT JOINT TRANSITION	259.6	16.3
				TOTAL	**1234.2**

ENTRANCE AND SIDEROADS

LOCATION	TYPE	EXISTING MATERIAL TYPE	35800100 PREPERATION OF BASE (SQ YD)	35800200 AGGREGATE BASE REPAIR (TON)	40200800 AGGREGATE SURFACE COURSE TYPE-B (TON)	40600982 HMA SURFACE REMOVAL - BUTT JOINT (SQ YD)	40800029 BITUMINOUS MATERIALS (TACK COAT) (POUND)	40800050 INCIDENTAL HMA SURFACE (TON)
US 67								
RT STA 558+91.20	Side Road	HMA				120	54	18
LT STA 565+31.90	FE	earth/aggr			1.0			
RT STA 572+14.10	PE	earth/aggr	31	2.5			3	3
LT STA 575+67.80	FE	earth/aggr			0.6			
RT STA 585+12.10	FE	earth/aggr			1.0			
LT STA 589+07.80	FE	earth/aggr			0.6			
RT STA 601+68.80	PE	earth/aggr	32	2.5			3	3
RT STA 603+09.60	PE	earth/aggr	33	2.6			3	3
LT STA 612+22.80	FE	earth/aggr			1.0			
RT STA 612+38.10	PE	earth/aggr	38	3.1			4	3
RT STA 615+00.00	PE	earth/aggr	37	2.9			4	3
LT STA 633+40.60	PE	earth/aggr	33	2.6			3	3
LT STA 642+25.60	PE	earth/aggr	43	3.4			4	4
RT STA 651+11.40	FE	earth/aggr			1.0			
LT STA 660+00.80	FE	earth/aggr			1.0			
RT STA 660+20.40	FE	earth/aggr			1.0			
LT STA 660+51.20	FE	earth/aggr			0.9			
LT STA 662+70.20	FE	earth/aggr			1.0			
RT STA 663+37.40	FE	earth/aggr			1.0			
LT STA 663+96.80	FE	earth/aggr			1.0			
LT STA 664+94.50	FE	earth/aggr			1.0			
RT STA 665+27.10	FE	earth/aggr			1.0			
LT STA 677+81.00	FE	earth/aggr			0.9			
RT STA 690+77.30	Side Road	HMA				163	74	24
LT STA 690+79.70	Side Road	HMA				377	170	55
LT STA 698+00.80	FE	earth/aggr			0.7			
RT STA 703+95.90	FE	earth/aggr			0.9			
LT STA 704+28.40	FE	earth/aggr			1.0			
STATION EQUATION STA 708+93.6 BK = STA 136+23.41 AH								
LT STA 143+45.30	PE	earth/aggr				32	14	7
RT STA 144+22.40	FE	HMA			1.0			
LT STA 144+23.10	PE	earth/aggr				41	18	9
LT STA 153+37.10	FE	earth/aggr			1.0			
LT STA 158+10.40	PE	earth/aggr				41	18	9
RT STA 171+55.10	FE	earth/aggr			1.0			
LT STA 171+84.50	Side Road	HMA				151	68	22
RT STA 180+64.80	CE	earth/aggr				31	14	6
LT STA 190+78.80	FE	earth/aggr			1.0			
RT STA 196+98.10	FE	earth/aggr			0.9			
LT STA 205+55.50	Side Road	HMA				385	173	57
LT STA 211+71.80	FE	earth/aggr			0.7			
STATION EQUATION STA 212+68.65 BK = STA 212+99.99 AH								
LT STA 233+12.50	FE	earth/aggr			1.0			
RT STA 233+71.60	FE	earth/aggr			0.5			
LT STA 239+71.50	PE L-MB	earth/aggr				79	36	17
RT STA 243+15.90	PE	earth/aggr				25	11	5
LT STA 243+34.60	PE L-MB	earth/aggr				71	32	15
RT STA 246+40.90	PE	earth/aggr				36	16	8
LT STA 246+84.00	MB	HMA				30	6	3
LT STA 261+62.60	PE T-MB	HMA				60	27	9
RT STA 264+18.20	FE	earth/aggr				9	4	
STATION EQUATION STA 271+86.60 BK = STA 273+79.67 AH								
LT STA 279+68.60	PE T-MB	earth/aggr				43	19	9
RT STA 280+25.20	FE	earth/aggr			0.7			
RT STA 284+18.90	PE	earth/aggr				48	22	10
LT STA 298+08.80	FE	earth/aggr			1.0			
RT STA 298+16.40	FE	earth/aggr			1.0			
LT STA 305+18.60	FE	earth/aggr			1.0			
LT STA 308+24.00	PE	HMA				68	31	10
LT STA 311+31.50	PE	HMA				78	35	12
RT STA 311+63.30	FE	earth/aggr						
IL 100								
LT STA 6+96.6	PE	earth/aggr				54	24	11
		TOTAL	**247**	**19.6**	**28.3**	**1942**	**890**	**338**

MODEL: Schedule of Quantities-11 [Sheet]
FILE NAME: c:\pw_work\pwidot\carl.johnson@illinois.gov\d0859453\D672263 Sht - Sched.Ule of Quantities.dgn

USER NAME = carl.johnson	DESIGNED -	REVISED -	
	DRAWN -	REVISED -	
	CHECKED -	REVISED -	
PLOT DATE = 4/3/2025	DATE -	REVISED -	

STATE OF ILLINOIS
DEPARTMENT OF TRANSPORTATION

SCHEDULE OF QUANTITIES

SCALE: | SHEET 2 OF 6 SHEETS | STA. TO STA.

F.A.P RTE.	SECTION	COUNTY	TOTAL SHEETS	SHEET NO.
*	(1115BDR, 116SR)RS-5, 124RS-8	MORGAN	69	25
		CONTRACT NO. 72263		
	ILLINOIS	FED. AID PROJECT		

*US 67 / IL 100 / IL 104

PAVEMENT MARKINGS - 24-INCH		
LOCATION	STATION	78009024 MODIFIED URETHANE PAVEMENT MARKING - LINE - 24" WHITE (FOOT)
INTERSECTION US 67 / IL 104	STA 158+44.8	13.5
INTERSECTION US 67 / IL 104	STA 158+89.0	18.6
INTERSECTION US 67 / IL 100	STA 205+19.4	38.8
INTERSECTION US 67 / IL 100	STA 206+00.3	13.9
INTERSECTION US 67 / IL 100	STA 206+65.2	17.7
	TOTAL	**103.0**

PAVEMENT MARKINGS - SYMBOLS		
STATIONING	DESCRIPTION	78009000 MODIFIED URETHANE PAVEMENT MARKING - LETTERS AND SYMBOLS WHITE (SQ FT)
US 67		
STA 156+72.1	LEFT TURN ARROW	15.6
STA 157+35.4	LEFT TURN ARROW	15.6
STA 159+02.8	LEFT TURN ARROW	15.6
STA 160+21.8	LEFT TURN ARROW	15.6
STA 161+42.4	LEFT TURN ARROW	15.6
STA 202+53.2	RIGHT TURN ARROW	15.6
STA 203+32.1	RIGHT TURN ARROW	15.6
STA 204+11.9	RIGHT TURN ARROW	15.6
STA 204+90.6	RIGHT TURN ARROW	15.6
STA 206+17.3	LEFT TURN ARROW	15.6
STA 207+07.4	LEFT TURN ARROW	15.6
STA 207+96.1	LEFT TURN ARROW	15.6
STA 208+99.0	LEFT TURN ARROW	15.6
STA 260+00	MERGING ARROW	15.6
STA 262+00	MERGING ARROW	15.6
TOTAL		**234.0**

PAVEMENT MARKING: 5 - 12 INCHES, PART 1 OF 2

STATIONING			DESCRIPTION	LENGTH	78009005 MODIFIED URETHANE PAVT MKG LINE - 5" WHITE EDGE LINE (FOOT)	78009005 MODIFIED URETHANE PAVT MKG LINE - 5" WHITE SKIPDASH (FOOT)	78009005 MODIFIED URETHANE PAVT MKG LINE - 5" YELLOW SOLID (FOOT)	78009005 MODIFIED URETHAN PAVT MKG LINE - 5" YELLOW SKIP DASH (FOOT)	78009006 MODIFIED URETHANE PAVEMENT MARKING - LANE- 6" WHITE SOLID (FOOT)	78009006 MODIFIED URETHANE PAVEMENT MARKING - LANE- 6" WHITE SKIP DASH (FOOT)	78009008 MODIFIED URETHANE PAVEMENT MARKING - LANE- 8" WHITE SOLID (FOOT)	78009012 MODIFIED URETHANE PAVEMENT MARKING - LANE- 12" WHITE SOLID (FOOT)	78009012 MODIFIED URETHANE PAVEMENT MARKING - LANE- 12" YELLOW SOLID (FOOT)
US 67 / IL 100													
STA 558+00.7	TO	STA 653+85	CENTER SKIP DASH	9584.3				2396.1					
RT STA 558+00.7	TO	STA 558+45.7	RIGHT EDGELINE	45.0	45.0								
LT STA 558+00.7	TO	LT STA 690+08.2	LEFT EDGELINE	13207.5	13207.5								
RT STA 559+26.6	TO	RT STA 690+22	RIGHT EDGELINE	13095.4	13095.4								
RT STA 653+85	TO	RT STA 662+35	RIGHT NO PASSING	425.0			850.0						
LT STA 653+85	TO	LT STA 662+35	LEFT SKIP DASH	850.0				212.5					
STA 662+35	TO	STA 663+67	DOUBLE CENTERLINE	132.0			264.0						
RT STA 663+67	TO	RT STA 669+68	RIGHT SKIP DASH	601.0				150.3					
LT STA 663+67	TO	LT STA 669+68	LEFT NO PASSING	300.5			601.0						
STA 669+68	TO	STA 708+93.60	CENTER SKIP DASH	3925.6				981.4					
RT STA 690+22	TO	RT STA 708+93.60	RIGHT EDGELINE	1778.6	1778.6								
LT STA 690+08.2	TO	LT STA 708+93.60	LEFT EDGELINE	1733.8	1733.8								
STATION EQUATION STA 708+93.60 = STA 136+23.41													
STA 136+23.41	TO	STA 144+40	CENTER SKIP DASH	816.6				204.1					
RT STA 136+23.41	TO	LT STA 157+49.5	RIGHT EDGELINE	2123.4	2123.4								
LT STA 136+23.41	TO	LT STA 157+49.5	LEFT EDGELINE	2129.5	2129.5								
RT STA 144+40	TO	RT STA 151+00	RIGHT NO PASSING	330.0			660.0						
LT STA 144+40	TO	LT STA 151+00	LEFT SKIP DASH	660.0				165.0					
STA 151+00	TO	STA 151+50	DOUBLE CENTERLINE	50.0			100.0						
STA 151+50	TO	STA 157+64	PAINTED MEDIAN	1228.0			2456.0						
STA 151+73.6	TO	STA 157+62.1	CHEVRONS	588.5									157.9
STA 154+74.5	TO	STA 156+50.6	LT TURNING LANE SKIP DASH	176.1						44.0			
STA 156+50.6	TO	STA 157+64	LT TURNING LANE	113.6					113.6				
INTERSECTION US 67 / IL 104			EDGELINE	358.0	358.0								
STA 158+45.3	TO	STA 159+23.4	TURNING ISLAND	205.8							205.8		
STA 158+47.6	TO	STA 159+32.6	CHEVRONS	85.0								139.4	
STA 158+79	TO	STA 162+00	LT TURNING LANE	320.7					320.7				
STA 158+79	TO	STA 170+90	PAINTED MEDIAN	2422.0			4844.0						
STA 158+84.6	TO	STA 170+75.0	CHEVRONS	1190.4									351.9
RT STA 160+03.4	TO	RT STA 204+26.6	RIGHT EDGELINE	4456.4	4456.4								
LT STA 160+03.4	TO	LT STA 204+26.6	LEFT EDGELINE	4419.5	4419.5								
STA 162+00	TO	STA 164+40.0	LT TURNING LANE SKIP DASH	239.5						59.9			
STA 170+90	TO	STA 171+44	DOUBLE CENTERLINE	54.0			108.0						
RT STA 171+44	TO	RT STA 176+42	RIGHT SKIP DASH	498.0				124.5					
LT STA 171+44	TO	LT STA 176+42	LEFT NO PASSING	249.0			498.0						
STA 176+42	TO	STA 191+38	SKIP DASH	1496.0				374.0					
RT STA 191+38	TO	RT STA 198+39	RIGHT NO PASSING	350.5			701.0						
LT STA 191+38	TO	LT STA 198+39	LEFT SKIP DASH	701.0				175.3					
STA 198+39	TO	STA 205+14	SOLID LINE	675.0			1350.0						
STA 200+19.4	TO	STA 202+52.9	RT TURNING LANE SKIP DASH	231.9						58.0			
STA 202+52.9	TO	STA 204+88.8	RT TURNING LANE	237.2					237.2				
INTERSECTION US 67 / IL 100			EDGELINE	892.8	892.8								
STA 205+84.2	TO	STA 209+21.2	LT TURNING LANE	336.3					336.3				
STA 205+92.1	TO	STA 207+13.6	TURNING ISLAND	307.9							307.9		
STA 205+95	TO	STA 206+98	CHEVRONS	103.0								221.4	
STA 206+10.4	TO	STA 212+68.65	SOLID LINE	658.3			1316.5						
RT STA 207+83.4	TO	RT STA 212+68.65	RIGHT EDGELINE	489.1	489.1								
RT STA 207+83.4	TO	LT STA 212+68.65	LEFT EDGELINE	482.8	482.8								
STA 207+01.7	TO	STA 212+68.65	LANE LINE	567.0	567.0								
STA 209+21.2	TO	STA 211+12.1	LT TURNING LANE	47.6						47.6			
STATION EQUATION STA 212+68.65 BK = STA 212+99.99 AH													
STA 212+99.99	TO	STA 215+01.7	LANE LINE	201.7	201.7								
STA 212+99.99	TO	STA 252+38	SOLID LINE	3938.0			7876.0						
RT STA 212+99.99	TO	RT STA 271+86.60	RIGHT EDGELINE	5890.6	5890.6								
LT STA 212+99.99	TO	LT STA 271+86.60	LEFT EDGELINE	5884.6	5884.6								
STA 215+01.7	TO	STA 263+66.3	SKIP DASH	4864.6		1216.2							
RT STA 252+38	TO	RT STA 261+96.5	RIGHT NO PASSING	479.3			958.5						
LT STA 252+38	TO	LT STA 261+96.5	LEFT SKIP DASH	958.5				239.6					
STA 261+96.5	TO	STA 271+86.60	SKIP DASH	990.1				247.5					
STATION EQUATION STA 271+86.60 BK = STA 273+79.67 AH													
				SUBTOTAL	**57755.7**	**1216.2**	**22583.0**	**5270.3**	**1007.8**	**209.5**	**513.7**	**360.8**	**509.8**

MODEL: Schedule of Quantities-12 [Sheet]
FILE NAME: c:\pw_work\pwidot\carl.johnson\d0858453\D672263 Sht - Schedule of Quantities.dgn

USER NAME = carl.johnson	DESIGNED -	REVISED -
	DRAWN -	REVISED -
	CHECKED -	REVISED -
PLOT DATE = 4/3/2025	DATE -	REVISED -

STATE OF ILLINOIS
DEPARTMENT OF TRANSPORTATION

SCHEDULE OF QUANTITIES

SCALE: SHEET 3 OF 6 SHEETS STA. TO STA.

F.A.P RTE.	SECTION	COUNTY	TOTAL SHEETS	SHEET NO.
*	(1115BDR, 116SR)RS-5, 124RS-8	MORGAN	69	26

CONTRACT NO. 72263

ILLINOIS FED. AID PROJECT

*US 67 / IL 100 / IL 104

REFLECTORS

LOCATION			LENGTH	DESCRIPTION	78100100 RAISED REFLECTIVE PAVEMENT MARKER	78300200 RAISED REFLECTIVE PAVEMENT MARKER REMOVAL	78200005 GUARDRAIL REFLECTORS, TYPE A	78200020 CURB REFLECTORS
			(FOOT)		(EACH)	(EACH)	(EACH)	(EACH)
US 67								
STA 559+26.6	TO	STA 708+93.6	14967.0	TWO-LANE / TWO-WAY	189.0	189.0	0.0	0.0
RT STA 658+96.7	TO	RT STA 660+08.5	111.8	GUARDRAIL REFLECTOR	0.0	0.0	3.0	0.0
RT STA 660+35.1	TO	RT STA 661+22.8	87.7	GUARDRAIL REFLECTOR	0.0	0.0	3.0	0.0
LT STA 660+62.6	TO	LT STA 661+02.3	39.7	GUARDRAIL REFLECTOR	0.0	0.0	2.0	0.0
LT STA 662+05.4	TO	LT STA 662+55.3	49.9	GUARDRAIL REFLECTOR	0.0	0.0	2.0	0.0
RT STA 662+18.1	TO	RT STA 663+21	95.9	GUARDRAIL REFLECTOR	0.0	0.0	3.0	0.0
LT STA 662+82.4	TO	LT STA 663+83.6	112.3	GUARDRAIL REFLECTOR	0.0	0.0	3.0	0.0
RT STA 663+51.4	TO	RT STA 665+12.9	161.5	GUARDRAIL REFLECTOR	0.0	0.0	4.0	0.0
LT STA 664+13.9	TO	LT STA 664+89.8	114.4	GUARDRAIL REFLECTOR	0.0	0.0	3.0	0.0
STATION EQUATION STA 708+93.6 BK = STA 136+23.41 AH								
STA 136+23.41	TO	STA 151+44	1520.6	TWO-LANE / TWO-WAY	21.0	21.0	0.0	0.0
STA 149+80	TO	STA 157+66	786.0	PAINTED MEDIAN	40.0	40.0	0.0	0.0
STA 156+50.6	TO	STA 157+64	113.4	RURAL LEFT TURN	4.0	4.0	0.0	0.0
STA 158+77	TO	STA 172+38	1361.0	PAINTED MEDIAN	69.0	69.0	0.0	0.0
STA 158+76	TO	STA 162+00	324.0	RURAL LEFT TURN	10.0	10.0	0.0	0.0
STA 171+18	TO	STA 199+02.1	2784.1	TWO-LANE / TWO-WAY	36.0	36.0	0.0	0.0
STA 199+02.1	TO	STA 200+49.1	147.0	CORRIGATED MEDIAN	6.0	6.0	0.0	0.0
STA 200+49.1	TO	STA 205+19	469.9	MEDIAN ISLAND	0.0	0.0	0.0	36.0
STA 202+52.9	TO	STA 204+88.8	235.9	RURAL RIGHT TURN	7.0	7.0	0.0	0.0
STA 205+84.2	TO	STA 209+21.2	337.0	RURAL LEFT TURN	10.0	10.0	0.0	0.0
STA 206+06.7	TO	STA 206+32.6	25.9	CORNER ISLAND	0.0	0.0	0.0	13.0
STA 206+10.4	TO	STA 211+63.8	553.4	MEDIAN ISLAND	0.0	0.0	0.0	53.0
STA 207+01.7	TO	STA 212+68.65	567.0	LANE LINE	9.0	9.0	0.0	0.0
STA 211+79.8	TO	STA 212+68.65	88.9	MEDIAN ISLAND	0.0	0.0	0.0	11.0
STATION EQUATION STA 212+68.65 BK = STA 212+99.99 AH								
STA 212+99.99	TO	STA 263+66.3	5066.3	LANE LINE	65.0	65.0	0.0	0.0
STA 212+99.99	TO	STA 215+08.0	208.0	MEDIAN ISLAND	0.0	0.0	0.0	15.0
STA 215+08.0	TO	STA 216+73.9	165.9	CORRIGATED MEDIAN	8.0	0.0	0.0	0.0
STA 216+73.9	TO	STA 271+86.60	5512.7	TWO-LANE / TWO-WAY	70.0	70.0	0.0	0.0
STATION EQUATION STA 271+86.60 BK = STA 273+79.67 AH								
STA 273+79.67	TO	STA 312+19.5	3839.8	TWO-LANE / TWO-WAY	49.0	49.0	0.0	0.0
POC STA 312+19.50 (EX67) = POT STA 10+85.74 (TRANSC)								
TRANSITION C								
STA 10+85.74	TO	STA 9+15.75	170.0	TWO-LANE / TWO-WAY	4.0	4.0	0.0	0.0
POT STA 17+24.96 (TRANSD) = PT STA 9+15.75 (TRANSC)								
STA 9+15.75	TO	STA 0+00.00	915.8	TRANSITION	13.0	13.0	0.0	0.0
POT STA 1134+89.60 @ 37.0' RT (P67) = PC STA 0+00.00 (TRANSC)								
TRANSITION D								
STA 17+24.96	TO	3+21.0	1403.96	TRANSITION	19.0	19.0	0.0	0.0
P67								
STA 1134+89.60	TO	STA 1133+50	139.6	FOUR-LANE DEVIDED HWY	3.0	3.0	0.0	0.0
IL 100								
STA 0+61.0	TO	STA 6+60.2	599.2	MEDIAN ISLAND	0.0	0.0	0.0	38.0
STA 7+12.3	TO	STA 21+71.9	1459.6	MEDIAN ISLAND	0.0	0.0	0.0	40.0
STATION EQUATION STA 14+51.92 BK = STA 21+11.26 AH								
STA 21+11.26	TO	STA 21+72	60.7	MEDIAN ISLAND	0.0	0.0	0.0	5.0
STA 21+72	TO	STA 23+25.9	153.9	CORRIGATED MEDIAN	6.0	6.0	0.0	0.0
STA 23+25.9	TO	STA 23+70.9	45.0	TWO-LANE / TWO-WAY	2.0	2.0	0.0	0.0
				TOTAL	**640.0**	**632.0**	**23.0**	**211.0**

PAVEMENT MARKING: 5 - 12 INCHES, PART 2 OF 2

STATIONING			DESCRIPTION	LENGTH	78009005 MODIFIED URETHANE PAVT MKG LINE - 5"	78009005 MODIFIED URETHANE PAVT MKG LINE - 5"	78009005 MODIFIED URETHANE PAVT MKG LINE - 5"	78009005 MODIFIED URETHAN PAVT MKG LINE - 5"	78009006 MODIFIED URETHANE PAVEMENT MARKING - LANE- 6"	78009006 MODIFIED URETHANE PAVEMENT MARKING - LANE- 6"	78009008 MODIFIED URETHANE PAVEMENT MARKING - LANE- 8"	78009012 MODIFIED URETHANE PAVEMENT MARKING - LANE- 12"	78009012 MODIFIED URETHANE PAVEMENT MARKING - LANE- 12"
					WHITE	WHITE	YELLOW	YELLOW	WHITE	WHITE	WHITE	WHITE	YELLOW
					EDGE LINE	SKIPDASH	SOLID	SKIP DASH	SOLID	SKIP DASH	SOLID	SOLID	SOLID
					(FOOT)	(FOOT)	(FOOT)	(FOOT)	(FOOT)	(FOOT)	(FOOT)	(FOOT)	(FOOT)
				SUBTOTAL	**57755.7**	**1216.2**	**22583.0**	**5270.3**	**1007.8**	**209.5**	**513.7**	**360.8**	**509.8**
STATION EQUATION STA 271+86.60 BK = STA 273+79.67 AH													
STA 273+79.67	TO	STA 302+85	SKIP DASH	2905.3				726.3					
RT STA 273+79.67	TO	RT STA 312+19.5	RIGHT EDGELINE	3848.4	3848.4								
LT STA 273+79.67	TO	LT STA 312+19.5	LEFT EDGELINE	3831.3	3831.3								
STA 302+85	TO	STA 312+19.5	DOUBLE CENTERLINE	934.5			1869						
POC STA 312+19.50 (EX67) = POT STA 10+85.74 (TRANSC)													
TRANSITION C													
STA 10+85.74	TO	STA 9+15.75	DOUBLE CENTERLINE	170.0			340.0						
RT STA 10+85.74	TO	RT STA 9+15.75	RIGHT EDGELINE	170.0	170.0								
LT STA 10+85.74	TO	LT STA 9+15.75	LEFT EDGELINE	170.0	170.0								
POT STA 17+24.96 (TRANSD) = PT STA 9+15.75 (TRANSC)													
STA 9+15.75	TO	STA 7+64.2	DOUBLE CENTERLINE	151.6			303.1						
LT STA 9+15.75	TO	STA 0+00.00	LEFT EDGELINE	915.8	915.8								
STA 7+64.2	TO	STA 1+03.8	PAINTED MEDIAN	1320.8			1320.8						
STA 6+53.8	TO	STA 1+03.8	CHEVRONS	550.0									342.5
STA 1+03.8	TO	STA 0+00.00	PAINTED MEDIAN	207.6			207.6						
STA 1+03.8	TO	STA 0+00.00	CHEVRONS	103.8									79.1
POT STA 1134+89.60 @ 37.0' RT (P67) = PC STA 0+00.00 (TRANSC)													
TRANSITION D													
RT STA 17+24.96	TO	RT 3+21.0	RT EDGELINE	1404.4	1404.4								
STA 15+73.4	TO	STA 9+15.75	PAINTED MEDIAN	809.2			1618.4						
STA 9+15.75	TO	STA 3+21	PAINTED MEDIAN	594.8			1189.5						
STA 9+15.75	TO	STA 3+93.4	CHEVRONS	522.4									317.3
P67													
STA 1134+89.60	TO	STA 1133+50	PAINTED MEDIAN	139.6			279.2						
LT STA 1134+89.6	TO	LT STA 1133+50	LEFT EDGE LINE	139.6	139.6								
STA 1134+89.60	TO	STA 1133+50	CHEVRONS										79.6
IL 100													
STA 0+60.4	TO	STA 6+60.8	DOUBLE CENTERLINE	600.4			600.4						
RT STA 1+72.4	TO	STA 6+13	RIGHT EDGELINE	440.6	444.7								
LT STA 1+72.4	TO	STA 14+51.92	LEFT EDGELINE	1279.5	1298.2								
STA 7+11.8	TO	STA 14+51.92	DOUBLE CENTERLINE	740.1			1483.6						
RT STA 7+43.7	TO	STA 14+51.92	RIGHT EDGELINE	708.2	714.3								
STATION EQUATION STA 14+51.92 BK = STA 21+11.26 AH													
STA 21+11.26	TO	STA 25+00	DOUBLE CENTERLINE	388.7			777.5						
RT STA 21+11.26	TO	RT STA 25+00	RIGHT EDGELINE	388.7	389.2								
LT STA 21+11.26	TO	LT STA 25+00	LEFT EDGELINE	388.7	388.2								
IL 104													
STA 235+71.3	TO	STA 236+68.6	PAINTED MEIDAN	97.3							184.4		
STA 236+07.2	TO	STA 236+53.3	CHEVRONS									28.0	
				TOTAL	**71469.7**	**1216.2**	**32572.1**	**5996.6**	**1007.8**	**209.5**	**698.1**	**388.8**	**1328.3**

MODEL: Schedule of Quantities-13 [Sheet]
FILE NAME: c:\pw_work\pwidot\carl.johnson@illinois.gov\d0858453\D672263 Sht - Schedule of Quantities.dgn

USER NAME = carl.johnson	DESIGNED -	REVISED -	
	DRAWN -	REVISED -	
	CHECKED -	REVISED -	
PLOT DATE = 4/3/2025	DATE -	REVISED -	

STATE OF ILLINOIS
DEPARTMENT OF TRANSPORTATION

SCHEDULE OF QUANTITIES

SCALE: | SHEET 4 OF 6 SHEETS | STA. | TO STA.

F.A.P RTE.	SECTION	COUNTY	TOTAL SHEETS	SHEET NO.
*	(1115BDR, 116SR)RS-5, 124RS-8	MORGAN	69	27

CONTRACT NO. 72263

ILLINOIS | FED. AID PROJECT

*US 67 / IL 100 / IL 104

MEDIANS & CURB AND GUTTERS

LOCATION			DESCRIPTION	60618300 CONCRETE MEDIAN SURFACE, 4 INCH (SQ FT)	60608552 COMBINATION CONCRETE CURB AND GUTTER, TYPE B-4.06 (FOOT)	60624600 CORRUGATED MEDIAN (SQ FT)	44000500 COMBINATION CURB AND GUTTER REMOVAL (FOOT)	X4402020 MEDIAN SURFACE REMOVAL (SQ FT)	X6060500 CORRUGATED MEDIAN REMOVAL (SQ FT)	31101000 SUBBASE GRANULAR MATERIAL, TYPE B (TON)
US 67										
STA 199+02.1	TO	STA 201+42.0	CORRUGATED MEDIAN			958.7			958.7	
STA 200+49.1	TO	STA 205+19.0	MEDIAN & CURB AND GUTTER	5775.4	852.6		852.6	5775.4		342.2
STA 206+06.7	TO	STA 206+32.6	MEDIAN & CURB AND GUTTER	181.5	69.2		69.2	181.5		10.8
STA 206+10.4	TO	STA 211+63.8	MEDIAN & CURB AND GUTTER	3816.8	1124.8		1124.8	3816.8		226.2
STA 211+79.8	TO	STA 212+68.65	MEDIAN & CURB AND GUTTER	1428.2	193.9		193.9	1428.2		84.6
STATION EQUATION STA 212+68.65 BK = STA 212+99.99 AH										
STA 212+99.99	TO	STA 215+08.0	MEDIAN & CURB AND GUTTER	2260.4	340.7		340.7	2260.4		133.9
STA 214+34.8	TO	STA 216+73.9	CORRUGATED MEDIAN			1313.1			1313.1	
IL 100										
STA 0+61.0	TO	STA 6+60.2	MEDIAN & CURB AND GUTTER	6253.7	1207.5		1207.5	6253.7		370.6
STA 7+12.3	TO	STA 21+71.9	MEDIAN & CURB AND GUTTER	6664.5	1482.1		1482.1	6664.5		394.9
STATION EQUATION STA 14+51.92 BK = STA 21+11.26 AH										
STA 21+11.26	TO	STA 21+72	MEDIAN & CURB AND GUTTER	219.9	82.3		82.3	219.9		13.0
STA 21+35.2	TO	STA 23+25.9	CORRUGATED MEDIAN			983.7			983.7	
			TOTAL	**26600.4**	**5353.1**	**2296.8**	**5353.1**	**26600.4**	**2296.8**	**1576.3**

SEEDING AND FERTILIZER

STATIONS			25000200 SEEDING CLASS II (ACRE)	25000400 NITROGEN FERTILIZER NUTRIENT (POUND)	25000500 PHOSPHORUS FERTILIZER NUTRIENT (POUND)	25000600 POTASSIUM FERTILIZER NUTRIENT (POUND)	25100115 MULCH, METHOD 2 (ACRE)
US 67							
STA 559+26.6	TO	STA 660+31.6	4.7	419	419	419	4.7
STA 662+45.3	TO	STA 690+08.2	1.1	100	100	100	1.1
STA 690+08.2	TO	STA 708+93.6	0.8	72	72	72	0.8
STATION EQUATION STA 708+93.6 BK = STA 136+23.41 AH							
STA 136+23.41	TO	STA 140+96.7	0.2	20	20	20	0.2
LT STA 140+96.7	TO	STA 144+00	0.1	6	6	6	0.1
		TOTAL	**6.9**	**617**	**617**	**617**	**6.9**

EXCAVATION

LOCATION			LENGTH	X20200600 EXCAVATING AND GRADING EXISTING SHOULDER (SPECIAL) (UNIT)	X2020110 GRADING AND SHAPING SHOULDERS (UNIT)
US 67					
STA 559+26.6	TO	STA 660+83.8	10157.2	203.1	203.1
STA 666+00	TO	STA 690+08.2	2408.2	48.2	48.2
STA 691+59.8	TO	STA 708+93.6	1733.8	34.7	34.7
STATION EQUATION STA 708+93.6 BK = STA 136+23.41 AH					
STA 136+23.41	TO	STA 140+96.7	473.29	9.5	9.5
LT STA 140+96.7	TO	LT STA 144+00	305.1	3.1	3.1
			TOTAL	**298.5**	**298.5**

SHORT-TERM PAVEMENT MARKING

STATIONS			DESCRIPTION	LENGTH (FOOT)	70300100 SHORT TERM PAVEMENT MARKING (WHITE) (FOOT)	70300150 SHORT TERM PAVEMENT MARKING REMOVAL (SQ FT)
US 67						
STA 558+00.7	TO	STA 708+93.60	CENTERLINE	15092.9	4527.9	503.1
STATION EQUATION STA 708+93.60 = STA 136+23.41						
STA 136+23.41	TO	STA 151+73.6	CENTERLINE	1550.19	465.1	51.7
STA 151+73.6	TO	STA 157+64	PAINTED MEDIAN	590.4	177.1	19.7
STA 158+79	TO	STA 170+90	PAINTED MEDIAN	1211	363.3	40.4
STA 170+90	TO	STA 199+02.1	CENTERLINE	2812.1	843.6	93.7
STA 207+06.2	TO	STA 212+68.65	SKIP DASH	562.45	168.7	18.7
STATION EQUATION STA 212+68.65 BK = STA 212+99.99 AH						
STA 212+99.99	TO	STA 262+93.2	SKIP DASH	4993.21	1498.0	166.4
STA 216+74	TO	STA 271+86.6	CENTERLINE	5512.6	1653.8	183.8
STATION EQUATION STA 271+86.60 BK = STA 273+79.67 AH						
STA 273+79.67	TO	STA 312+19.5	CENTERLINE	3839.8	1151.9	128.0
POC STA 312+19.50 (EX67) = POT STA 10+85.74 (TRANSC)						
TRANSITION C						
STA 10+85.74	TO	STA 9+15.75	CENTERLINE	170.0	51.0	5.7
POT STA 17+24.96 (TRANSD) = PT STA 9+15.75 (TRANSC)						
STA 9+15.75	TO	STA 7+64.2	CENTERLINE	151.6	45.5	5.1
STA 7+64.2	TO	STA 0+00.00	PAINTED MEDIAN	764.2	229.3	25.5
POT STA 1134+89.60 @ 37.0' RT (P67) = PC STA 0+00.00 (TRANSC)						
TRANSITION D						
STA 15+73.42	TO	3+21.0	PAINTED MEIDAN	1252.4	375.7	41.7
P67						
STA 1134+89.60	TO	STA 1133+50	PAINTED MEIDAN	139.6	41.9	4.7
IL 104						
STATION EQUATION STA 14+51.92 BK = STA 21+11.26 AH						
STA 23+25.9	TO	STA 25+00.0	CENTERLINE	174.1	52.2	5.8
SPUNKY RIDGE ROAD						
STA 10+95.0	TO	STA 11+45.0	CENTERLINE	50	15.0	1.7
				TOTAL	**11660.0**	**1295.6**

MODEL: Schedule of Quantities-14 [Sheet]
FILE NAME: c:\pw_work\pwidot\carl.johnson@illinois.gov\d0858453\D672263 Sht - Schedule of Quantities.dgn

USER NAME = carl.johnson	DESIGNED -	REVISED -	
	DRAWN -	REVISED -	
	CHECKED -	REVISED -	
PLOT DATE = 4/3/2025	DATE -	REVISED -	

STATE OF ILLINOIS
DEPARTMENT OF TRANSPORTATION

SCHEDULE OF QUANTITIES

SCALE: | SHEET 5 OF 6 SHEETS | STA. TO STA.

F.A.P RTE.	SECTION	COUNTY	TOTAL SHEETS	SHEET NO.
*	(1115BDR, 116SR)RS-5, 124RS-8	MORGAN	69	28

CONTRACT NO. 72263

ILLINOIS | FED. AID PROJECT

*US 67 / IL 100 / IL 104

GUARDRAIL													
STATIONING			SIDE	63000001	63100045	63100085	63100167	63200310	64300260	72501000	X6310214	X6330725	X6331007
				STEEL PLATE BEAM GUARDRAIL, TYPE A, 6 FOOT POSTS	TRAFFIC BARRIER TERMINAL, TYPE 2	TRAFFIC BARRIER TERMINAL, TYPE 6	TRAFFIC BARRIER TERMINAL, TYPE 1 (SPECIAL) TANGENT	GUARDRAIL REMOVAL	IMPACT ATTENUATORS (FULLY REDIRECTIVE), TEST LEVEL 3	TERMINAL MARKER - DIRECT APPLIED	TRAFFIC BARRIER TERMINAL, TYPE 6 (SPECIAL)	STELL PLATE BEAM GUARDRAIL (SHORT RADIUS)	REMOVAL & REPLACEMENT OF STEEL PLATE BEAM GUARDRAIL, RAIL ELEMENT
				(FOOT)	(EACH)	(EACH)	(EACH)	(FOOT)	(EACH)	(EACH)	(EACH)	(FOOT)	(FOOT)
US 67													
RT STA 658+96.1	TO	RT STA 659+46.1	RT				1	50		1			
RT STA 659+46.1	TO	RT STA 659+58.5	RT	12.5				11.9					
RT STA 659+58.5	TO	RT STA 660+08.5	RT				1	50		1			
RT STA 660+35.1	TO	RT STA 660+85.4	RT				1	42.5		1			
LT STA 660+59.6	TO	LT STA 661+02.3	LT					44					
LT STA 660+62.6	TO	LT STA 660+98.3	LT						1				
LT STA 660+79.4	TO	LT STA 661+02.3	LT								1		
RT STA 660+85.4	TO	RT STA 661+22.8	RT			1		37.5					
LT STA 662+05.4	TO	LT STA 662+48.1	LT					45.4					
LT STA 662+05.4	TO	LT STA 662+38.5	LT								1		
RT STA 662+18.1	TO	RT STA 662+62.7	RT			1		37.5					
LT STA 662+19.6	TO	LT STA 662+55.3	LT						1				
RT STA 662+62.7	TO	RT STA 662+71.1	RT	8.4				8.4					
RT STA 662+71.1	TO	RT STA 663+21	RT				1	50		1			
LT STA 662+72.4	TO	LT STA 663+42.3	LT					50					
LT STA 662+83.7	TO	LT STA 663+32.3	LT				1			1			
LT STA 663+42.3	TO	LT STA 663+53.6	LT					11.3					
LT STA 663+33.6	TO	LT STA 663+83.6	LT				1	50		1			
RT STA 663+51.4	TO	RT STA 664+01.4	RT				1	50		1			
RT STA 664+01.4	TO	RT STA 664+49.4	RT	48				48					
LT STA 664+12.2	TO	LT STA 664+28.7	LT		1			50				25	
LT STA 664+28.7	TO	LT STA 664+69.7	LT										40
RT STA 664+49.4	TO	RT STA 664+62.5	RT										13.5
RT STA 664+62.5	TO	RT STA 665+12.9	RT				1	50		1			
LT STA 664+69.7	TO	LT STA 664+88.1	LT		1			50				25	
		TOTAL		68.9	1	2	8	686.5	2	8	2	50	53.5

CONCRETE PAD FOR CRASH ATTENUATORS				
STATIONING			LENGTH	48300300 PORTALND CEMENT CONCRETE SHOULDRS, 8"
				(SQ YD)
LT STA 660+62.1	TO	LT STA 660+99.1	37	25.1
LT STA 662+18.8	TO	LT STA 662+55.8	37	25.1
			TOTAL	50.2

MODEL: Schedule of Quantities-15 [Sheet]
FILE NAME: c:\pw_work\pwidot\carl.johnson@illinois.gov\d0858453\D672263 Sht - Schedule of Quantities.dgn

USER NAME = carl.johnson	DESIGNED -	REVISED -	
	DRAWN -	REVISED -	
	CHECKED -	REVISED -	
PLOT DATE = 4/3/2025	DATE -	REVISED -	

STATE OF ILLINOIS
DEPARTMENT OF TRANSPORTATION

SCHEDULE OF QUANTITIES

SCALE: | SHEET 6 OF 6 SHEETS | STA. TO STA.

F.A.P RTE.	SECTION	COUNTY	TOTAL SHEETS	SHEET NO.
*	(1115BDR, 116SR)RS-5, 124RS-8	MORGAN	69	29
		CONTRACT NO. 72263		
	ILLINOIS	FED. AID PROJECT		

*US 67 / IL 100 / IL 104

HORIZONTAL ALIGNMENT CONTROL

NAD83/1997 ADJ - STATE PLANE WEST ZONE

POINT TYPE	STATION	NORTHING	EASTING	RADIUS	LENGTH	TANGENT	DELTA / THETA	ROTATION
ALIGNMENT NAME: E200								
DESCRIPTION: MAINLINE US 67								
POT	28+63.010	1215247.651	2220897.475					
PI	40+80.449	1214030.216	2220900.535					
POT	44+46.428	1213664.240	2220902.007					
PC	63+59.340	1211751.344	2220909.702					
PI	66+49.040	1211461.646	2220910.867	1420.91	571.57	289.70	23.047°	RIGHT
PT	69+30.906	1211194.616	2220798.525					
PC	73+37.135	1210820.174	2220640.995					
PI	77+49.335	1210440.230	2220481.149	1921.13	812.09	412.20	24.220°	RIGHT
PT	81+49.223	1210159.303	2220179.505					
POT	117+06.149	1207735.147	2217576.584					
PC	124+63.089	1207219.269	2217022.663					
PI	128+73.189	1206939.773	2216722.557	17242.25	820.05	410.10	2.725°	RIGHT
PT	132+83.135	1206674.861	2216409.501					
PC	138+54.719	1206305.635	2215973.175					
PI	143+33.719	1205996.216	2215607.524	4299.11	954.07	479.00	12.715°	LEFT
PT	148+08.784	1205613.903	2215318.944					
POT	172+00.000	1203705.360	2213878.328					
PC	196+77.670	1201727.814	2212385.625					
PI	202+03.070	1201308.467	2212069.092	11441.87	1050.06	525.40	5.258°	RIGHT
PT	207+27.732	1200919.894	2211715.459					
PC	225+03.242	1199606.769	2210520.412					
PI	230+18.442	1199225.739	2210173.645	7641.47	1028.84	515.20	7.714°	RIGHT
PT	235+32.085	1198894.705	2209778.869					
PC	257+19.720	1197489.075	2208102.579					
PI	262+26.520	1197163.439	2207714.240	1638.54	983.02	506.80	34.374°	LEFT
PT	267+02.735	1196675.416	2207577.566					
PC	297+21.742	1193768.263	2206763.401					
PI	302+46.142	1193263.292	2206621.981	3820.86	1042.29	524.40	15.630°	RIGHT
PT	307+64.030	1192815.094	2206349.742					
PC	333+52.755	1190602.545	2205005.821					
PI	339+82.655	1190064.178	2204678.812	2292.94	1229.47	629.90	30.722°	LEFT
PT	345+82.225	1189434.307	2204672.734					
POT	377+00.000	1186316.678	2204642.647					
POT	405+00.000	1183516.808	2204615.627					
POT	432+00.000	1180816.934	2204589.571					
PC	459+73.052	1178044.011	2204562.811					
PI	464+88.452	1177528.635	2204557.837	1636.15	998.60	515.40	34.970°	RIGHT
PT	469+71.653	1177109.157	2204258.378					
PC	510+48.602	1173790.981	2201889.577					
PI	515+64.802	1173370.853	2201589.653	1636.52	1000.07	516.20	35.013°	LEFT
PT	520+48.672	1172854.673	2201585.064					
POT	545+00.000	1170403.442	2201563.274					
POT	580+00.000	1166903.581	2201532.163					
POT	615+00.000	1163403.719	2201501.052					
POT	645+00.000	1160403.837	2201474.385					
PI	676+04.137	1157299.823	2201446.792					
POT	708+93.598	1154010.490	2201417.809					

POINT TYPE	STATION	NORTHING	EASTING	RADIUS	LENGTH	TANGENT	DELTA / THETA	ROTATION
ALIGNMENT NAME: US67_IL100_E102								
DESCRIPTION: MAINLINE US 67								
POT	136+23.410	1154010.490	2201417.809					
PC	140+89.464	1153544.454	2201413.703					
PI	144+84.464	1153149.469	2201410.222	2743.59	784.61	395.00	16.385°	RIGHT
PT	148+74.073	1152771.508	2201295.460					
PC	160+34.249	1151661.378	2200958.384					
PI	164+13.259	1151298.717	2200848.267	3829.26	755.56	379.01	11.305°	LEFT
PT	167+89.809	1150921.506	2200811.380					
POT	175+54.996	1150159.952	2200736.910					

POINT TYPE	STATION	NORTHING	EASTING	RADIUS	LENGTH	TANGENT	DELTA / THETA	ROTATION
ALIGNMENT NAME: EX67								
DESCRIPTION: MAINLINE US 67								
POT	175+55.000	1150159.952	2200736.910					
PC	186+86.853	1149033.472	2200626.755					
PI	200+20.113	1147706.541	2200496.998	4194.49	2581.80	1333.26	35.267°	LEFT
PT STA EQ	212+68.649 BK=	1146548.219	2201157.203					
POT	212+99.990 AH	1146548.219	2201157.203					
PC	234+48.770	1144681.381	2202221.239					
PI	239+17.370	1144274.266	2202453.281	5735.56	935.12	468.60	9.341°	LEFT
PT	243+83.892	1143910.215	2202748.328					
POT STA EQ	271+86.602 BK=	1141732.816	2204513.010					
PC	273+79.669 AH	1141732.816	2204513.010					
PI	278+76.269	1141347.011	2204825.687	2293.56	978.10	496.60	24.434°	LEFT
PT	283+57.771	1141125.099	2205269.947					
PC	290+33.485	1140823.147	2205874.442					
PI	295+57.685	1140588.901	2206343.392	2288.74	1030.62	524.20	25.800°	LEFT
PT	300+64.109	1140582.111	2206867.548					
PC	305+99.976	1140575.169	2207403.370					
PI	311+12.476	1140568.530	2207915.827	3815.04	1018.90	512.50	15.302°	RIGHT
PT	316+18.876	1140426.884	2208408.364					
PC	322+74.328	1140245.728	2209038.284					
PI	327+73.228	1140107.840	2209517.751	3817.53	992.18	498.90	14.891°	LEFT
PT	332+66.505	1140097.798	2210016.550					

POINT TYPE	STATION	NORTHING	EASTING	RADIUS	LENGTH	TANGENT	DELTA / THETA	ROTATION
ALIGNMENT NAME: P67								
DESCRIPTION: MAINLINE US 67								
POT	714+38.480	1126291.823	2247553.501					
PC	745+02.665	1128063.941	2245053.735					
PI	752+86.521	1128517.270	2244414.264	2624.23	1523.44	783.86	33.262°	33.262°
PT	760+26.100	1128545.606	2243630.921					
PC	770+13.153	1128581.287	2242644.512					
PI	775+28.873	1128599.930	2242129.130	5729.58	1028.67	515.72	10.287°	RIGHT
PT	780+41.820	1128710.307	2241625.361					
PC	844+65.430	1130085.120	2235350.598					
PI	848+54.347	1130168.358	2234970.693	32808.33	777.80	388.92	1.358°	LEFT
PT	852+43.227	1130242.567	2234588.921					
PC	871+03.734	1130597.569	2232762.597					
PI	876+76.403	1130706.839	2232200.450	32808.32	1145.22	572.67	2.000°	RIGHT
PT	882+48.956	1130835.662	2231642.458					
PC	893+62.926	1131086.250	2230557.039					
PI	903+14.322	1131300.268	2229630.027	6561.67	1889.62	951.40	16.500°	LEFT
PT	912+52.550	1131242.187	2228680.406					
PC	927+32.356	1131151.847	2227203.360					
PI	937+25.110	1131091.240	2226212.458	2952.75	1915.39	992.75	37.167°	RIGHT
PT	946+47.747	1131641.584	2225386.211					
POT	951+64.988	1131928.322	2224955.724					
PC	970+00.675	1132945.954	2223427.924					
PI	979+37.530	1133465.309	2222648.202	13123.33	1870.54	936.86	8.167°	RIGHT
PT	988+71.212	1134090.160	2221950.162					
PC	1022+63.006	1136352.371	2219422.977					
PI	1031+15.755	1136921.126	2218787.604	5905.50	1693.79	852.75	16.433°	LEFT
PT	1039+56.796	1137286.900	2218017.285					
PC	1089+68.354	1139436.533	2213490.168					
PI	1104+58.925	1140075.892	2212143.683	8202.08	2948.96	1490.57	20.600°	LEFT
PT	1119+17.313	1140200.619	2210658.339					
PC	1159+36.604	1140536.945	2206653.145					
PI	1170+00.048	1140625.932	2205593.430	3280.83	2056.77	1063.44	35.919°	RIGHT
PT	1179+93.374	1141319.670	2204787.427					

MODEL: Survey Sheet 1 [Sheet]
FILE NAME: c:\pw_work\pwidot\carl.johnson@illinois.gov\d0858453\D672263 Sht - Ties and Benchmarks.dgn

USER NAME = carl.johnson	DESIGNED -	REVISED -	
	DRAWN -	REVISED -	
	CHECKED -	REVISED -	
PLOT DATE = 4/3/2025	DATE -	REVISED -	

STATE OF ILLINOIS
DEPARTMENT OF TRANSPORTATION

ALIGNMENT, TIES, AND BENCHMARKS

SCALE: | SHEET A001 OF 4 SHEETS | STA. | TO STA.

F.A.P RTE.	SECTION	COUNTY	TOTAL SHEETS	SHEET NO.
*	(1115BDR, 116SR)RS-5, 124RS-8	MORGAN	69	30

CONTRACT NO. 72263

ILLINOIS | FED. AID PROJECT

*US 67 / IL 100 / IL 104

POINT TYPE	STATION	NORTHING	EASTING	RADIUS	LENGTH	TANGENT	DELTA / THETA	ROTATION
ALIGNMENT NAME: DUTCH_LN_W								
DESCRIPTION: SIDE ROAD								
POT	193+08.003	1138201.695	2214577.685					
PI	194+99.477	1138393.157	2214579.858					
PC	195+86.460	1138480.134	2214580.846					
PI	196+49.146	1138542.816	2214581.557	735.00	125.07	62.69	9.750°	RIGHT
PT	197+11.530	1138604.473	2214592.873					
POT	200+00.000	1138888.204	2214644.948					
PC	202+89.559	1139173.006	2214697.219					
PI	204+20.000	1139301.304	2214720.766	565.00	256.39	130.44	26.000°	LEFT
PT	205+45.948	1139426.939	2214685.688					
PC	207+60.223	1139633.321	2214628.065					
PI	208+59.277	1139728.725	2214601.427	665.00	196.66	99.05	16.944°	RIGHT
PT	209+56.884	1139827.751	2214603.751					
POT	215+45.309	1140416.023	2214617.191					

POINT TYPE	STATION	NORTHING	EASTING	RADIUS	LENGTH	TANGENT	DELTA / THETA	ROTATION
ALIGNMENT NAME: HARTSGRAVEL_RD								
DESCRIPTION: SIDE ROAD								
PC	288+77.398	1138715.410	2212524.474					
PI	289+55.590	1138792.798	2212513.290	760.11	155.84	78.19	11.747°	RIGHT
PT	290+33.234	1138870.842	2212518.096					
PC	291+46.250	1138983.646	2212525.027					
PI	292+33.091	1139070.324	2212530.352	665.00	172.71	86.84	14.880°	LEFT
PT	293+18.955	1139155.462	2212513.240					
PC	295+31.319	1139363.662	2212471.393					
PI	296+27.634	1139458.089	2212452.414	565.00	190.80	96.32	19.348°	RIGHT
PT	297+22.115	1139553.470	2212465.792					
POT	300+00.000	1139828.662	2212504.388					

POINT TYPE	STATION	NORTHING	EASTING	RADIUS	LENGTH	TANGENT	DELTA / THETA	ROTATION
ALIGNMENT NAME: TRANSD								
DESCRIPTION: CROSSOVER TRANSITION								
PC	0+00.000	1140227.888	2209891.437					
PI	4+58.196	1140266.229	2209434.848	10000.00	915.75	458.20	5.247°	RIGHT
PT	9+15.751	1140346.163	2208983.679					
POT	17+24.961	1140487.332	2208186.877					

POINT TYPE	STATION	NORTHING	EASTING	RADIUS	LENGTH	TANGENT	DELTA / THETA	ROTATION
ALIGNMENT NAME: TRANSC								
DESCRIPTION: SIDE ROAD								
PC	0+00.000	1140369.058	2209094.635					
PI	4+58.196	1140407.398	2208638.047	10000.00	915.75	458.20	5.247°	RIGHT
PT	9+15.751	1140487.332	2208186.877					
POT	10+85.737	1140516.987	2208019.498					

POINT TYPE	STATION	NORTHING	EASTING	RADIUS	LENGTH	TANGENT	DELTA / THETA	ROTATION
ALIGNMENT NAME: SPUNKYRIDGE								
DESCRIPTION: SIDE ROAD								
POT	10+00.000	1147194.716	2200858.325					
PC	14+37.071	1147528.563	2201140.419					
PI	15+61.811	1147623.843	2201220.928	459.60	243.61	124.74	30.370°	RIGHT
PT	16+80.682	1147665.344	2201338.562					
POT	21+39.471	1147817.986	2201771.214					

POINT TYPE	STATION	NORTHING	EASTING	RADIUS	LENGTH	TANGENT	DELTA / THETA	ROTATION
ALIGNMENT NAME: IL100Y								
DESCRIPTION: SIDE ROAD								
POT	0+00.000	1147194.716	2200858.325					
PC	2+88.864	1146974.074	2200671.886					
PI	8+83.354	1146519.986	2200288.190	2278.61	1163.05	594.49	29.245°	LEFT
PT	14+51.917	1145936.324	2200175.244					

POINT TYPE	STATION	NORTHING	EASTING	RADIUS	LENGTH	TANGENT	DELTA / THETA	ROTATION
ALIGNMENT NAME: IL100_E001								
DESCRIPTION: SIDE ROAD								
POT	21+11.260	1145936.324	2200175.244					
PC	28+88.979	1145172.770	2200027.486					
PI	33+88.029	1144682.810	2199932.672	2851.45	988.09	499.05	19.854°	RIGHT
PT	38+77.071	1144254.175	2199677.089					
POT	51+00.000	1143203.798	2199050.779					
PC	64+50.883	1142043.521	2198358.939					
PI	72+01.103	1141399.156	2197974.722	2864.39	1467.48	750.22	29.354°	LEFT
PT	79+18.360	1140649.177	2197955.701					

POINT TYPE	STATION	NORTHING	EASTING	RADIUS	LENGTH	TANGENT	DELTA / THETA	ROTATION
ALIGNMENT NAME: BEAUCHAMP								
DESCRIPTION: SIDE ROAD								
POT	1+15.580	1146982.587	2199625.734					
PC	4+19.897	1146888.743	2199915.220					
PI	5+73.747	1146841.300	2200061.572	1999.32	307.10	153.85	8.801°	RIGHT
PT	7+26.992	1146772.023	2200198.943					
POT	10+00.003	1146649.091	2200442.710					

POINT TYPE	STATION	NORTHING	EASTING	RADIUS	LENGTH	TANGENT	DELTA / THETA	ROTATION
ALIGNMENT NAME: PR_IL104								
DESCRIPTION: SIDE ROAD								
POT	0+00.000	1152864.535	2177359.134					
PC	40+02.194	1152807.189	2181360.918					
PI	44+05.377	1152801.412	2181764.059	14500.00	806.16	403.18	3.185°	RIGHT
PT	48+08.352	1152773.242	2182166.256					
PC	50+13.352	1152758.918	2182370.755					
PI	54+56.850	1152727.931	2182813.170	14500.00	886.72	443.50	3.504°	LEFT
PT	59+00.072	1152724.041	2183256.652					
PC	85+39.279	1152700.887	2185895.757					
PI	86+45.877	1152699.952	2186002.351	800.00	211.95	106.60	15.180°	RIGHT
PT	87+51.227	1152671.138	2186104.981					
PC	95+14.274	1152464.883	2186839.624					
PI	96+21.087	1152436.011	2186942.460	800.00	212.37	106.81	15.210°	LEFT
PT	97+26.644	1152435.131	2187049.269					
PC	128+90.164	1152409.042	2190212.683					
PI	133+95.164	1152404.878	2190717.665	7170.00	1008.34	505.00	8.058°	RIGHT
PT	138+98.499	1152329.972	2191217.079					
PC	148+61.899	1152187.071	2192169.822					
PI	153+74.999	1152110.963	2192677.246	8613.84	1024.99	513.10	6.818°	LEFT
PT	158+86.888	1152095.631	2193190.117					
PI	214+78.855	1151928.535	2198779.587					
POT	224+69.162	1151898.487	2199769.438					
POT	237+19.162	1151860.559	2201018.862					

POINT TYPE	STATION	NORTHING	EASTING	RADIUS	LENGTH	TANGENT	DELTA / THETA	ROTATION
ALIGNMENT NAME: ARENSVILLE_RD								
DESCRIPTION: SIDE ROAD								
POT	20+00.000	1155824.351	2201433.791					
POT	22+20.022	1155819.547	2201653.761					
POT	37+51.156	1155786.115	2203184.530					

POINT TYPE	STATION	NORTHING	EASTING	RADIUS	LENGTH	TANGENT	DELTA / THETA	ROTATION
ALIGNMENT NAME: KOCHS_LN								
DESCRIPTION: SIDE ROAD								
POT	7+02.284	1155861.768	2200136.570					
POT	19+32.779	1155828.532	2201366.616					
POT	20+00.000	1155826.716	2201433.812					

POINT TYPE	STATION	NORTHING	EASTING	RADIUS	LENGTH	TANGENT	DELTA / THETA	ROTATION
ALIGNMENT NAME: MORGAN-CASS-W								
DESCRIPTION: SIDE ROAD								
POT	6+30.622	1169025.502	2200181.594					
POT	19+38.112	1169012.868	2201489.023					
POT	20+00.000	1169012.270	2201550.908					

MODEL: Survey Sheet 2 [Sheet]
FILE NAME: c:\pw_work\pwidot\carl.johnson@illinois.gov\d0858453\D672263 Sht - Ties and Benchmarks.dgn

USER NAME = carl.johnson	DESIGNED -	REVISED -
	DRAWN -	REVISED -
	CHECKED -	REVISED -
PLOT DATE = 4/3/2025	DATE -	REVISED -

STATE OF ILLINOIS
DEPARTMENT OF TRANSPORTATION

ALIGNMENT, TIES, AND BENCHMARKS

SCALE: | SHEET A002 OF 4 SHEETS | STA. | TO STA.

F.A.P RTE.	SECTION	COUNTY	TOTAL SHEETS	SHEET NO.
*	(1115BDR, 116SR)RS-5, 124RS-8	MORGAN	69	31

CONTRACT NO. 72263

ILLINOIS | FED. AID PROJECT

*US 67 / IL 100 / IL 104

POINT TYPE	STATION	NORTHING	EASTING	RADIUS	LENGTH	TANGENT	DELTA / THETA	ROTATION
ALIGNMENT NAME: MORGAN-CASS-E								
DESCRIPTION: SIDE ROAD								
POT	20+00.000	1169669.667	2201556.752					
POT	20+90.048	1169668.391	2201646.791					
POT	29+61.713	1169656.041	2202518.368					

POINT TYPE	STATION	NORTHING	EASTING	RADIUS	LENGTH	TANGENT	DELTA / THETA	ROTATION
ALIGNMENT NAME: ACREAGE-AVE								
DESCRIPTION: SIDE ROAD								
POT	20+00.000	1172651.462	2201583.258					
POT	20+54.573	1172655.109	2201637.708					
POT	24+82.188	1172683.686	2202064.368					

POINT TYPE	STATION	NORTHING	EASTING	RADIUS	LENGTH	TANGENT	DELTA / THETA	ROTATION
ALIGNMENT NAME: GLENWOOD-AVE								
DESCRIPTION: SIDE ROAD								
POT	20+00.000	1172974.812	2201590.551					
POT	20+45.197	1172974.406	2201635.746					
POT	25+88.519	1172969.524	2202179.046					

POINT TYPE	STATION	NORTHING	EASTING	RADIUS	LENGTH	TANGENT	DELTA / THETA	ROTATION
ALIGNMENT NAME: THURMAN-LN								
DESCRIPTION: SIDE ROAD								
POT	20+00.000	1173282.836	2201646.018					
POT	20+41.931	1173281.883	2201687.937					
POT	23+52.155	1173274.835	2201998.082					

POINT TYPE	STATION	NORTHING	EASTING	RADIUS	LENGTH	TANGENT	DELTA / THETA	ROTATION
ALIGNMENT NAME: HONEYPOINT-RD								
DESCRIPTION: SIDE ROAD								
POT	5+93.310	1174296.632	2200797.360					
PC	12+18.290	1174285.182	2201422.235					
PI	13+29.114	1174283.152	2201533.040	1390.64	221.18	110.82	9.113°	RIGHT
PT	14+39.471	1174263.598	2201642.126					
PC	14+39.471	1174263.598	2201642.126					
PI	15+32.070	1174247.259	2201733.272	1070.71	184.74	92.60	9.886°	LEFT
PT	16+24.209	1174246.812	2201825.870					
PC	19+23.130	1174245.367	2202124.788					
PI	19+44.928	1174245.262	2202146.585	100.20	42.93	21.80	24.546°	RIGHT
PT	19+66.056	1174236.111	2202166.369					
POT	20+00.000	1174221.861	2202197.176					

POINT TYPE	STATION	NORTHING	EASTING	RADIUS	LENGTH	TANGENT	DELTA / THETA	ROTATION
ALIGNMENT NAME: KUHLMAN-RD								
DESCRIPTION: SIDE ROAD								
POT	20+00.000	1178198.367	2204564.301					
POT	20+56.696	1178198.270	2204620.997					
POT	31+38.664	1178196.411	2205702.963					

HORIZONTAL CONTROL STATION - NAD83/1997

POINT	DESCRIPTION	NORTHING	EASTING	STATION	OFFSET	CHAIN
4036	#4 REBAR W CAP	1178191.060	2204545.335	458+26.179	18.894 RT	E200
50031	NGS J 255 - NGS DISK IN CONC	1178123.100	2203818.441			
4023	#4 REBAR W CAP	1177565.066	2204505.966	464+53.984	18.759 LT	E200
4024	#4 REBAR W CAP	1176500.854	2203874.661	476+89.692	41.136 LT	E200
902165	#4 REBAR W CAP	1176175.793	2203636.663	480+92.537	36.300 LT	E200
4025	#4 REBAR W CAP	1175282.175	2202977.711	492+02.708	19.201 LT	E200
4037	#4 REBAR W CAP	1174270.310	2201793.428	15+90.939	22.835 LT	HONEYPOINT-RD
902158	#4 REBAR W CAP	1174215.914	2202150.521	505+51.140	34.516 RT	E200
50000	NGS D 243 - NGS DISK IN CONC	1174210.049	2202139.535	505+62.297	40.050 RT	E200
4026	#4 REBAR W CAP	1173014.040	2201577.220	518+90.770	16.951 RT	E200
902155	#4 REBAR W CAP	1172285.069	2201558.207	526+18.493	21.793 RT	E200
4027	#4 REBAR W CAP	1170816.955	2201549.316	540+86.628	17.634 RT	E200
4028	#4 REBAR W CAP	1169299.914	2201570.103	556+03.424	16.638 LT	E200
4034	#4 REBAR W CAP	1169040.737	2201067.139	15+15.978	23.791 LT	MORGAN-CASS-W
145094	NGS G 255 - NGS DISK IN CONC	1168857.913	2201509.820	560+45.943	39.714 RT	E200
4029	#4 REBAR W CAP	1167352.819	2201518.767	575+50.898	17.389 RT	E200
902148	#4 REBAR W CAP	1166393.983	2201493.182	585+09.924	34.450 RT	E200
4030	#4 REBAR W CAP	1164938.524	2201496.273	599+65.298	18.421 RT	E200
70478	NGS F 255 - NGS DISK IN CONC	1164721.986	2201473.949	601+82.026	38.820 RT	E200
4031	#4 REBAR W CAP	1163386.106	2201482.540	615+17.777	18.354 RT	E200
4032	#4 REBAR W CAP	1162458.592	2201476.863	624+45.305	15.787 RT	E200
902142	#4 REBAR W CAP	1161577.713	2201502.622	633+25.920	17.801 LT	E200
4033	#4 REBAR W CAP	1160137.702	2201488.085	647+66.003	16.065 LT	E200
4040	#4 REBAR W CAP	1158496.765	2201422.737	664+07.456	34.694 RT	E200
902135	#4 REBAR W CAP	1157122.432	2201466.365	677+81.349	21.135 LT	E200
4035	#4 REBAR W CAP	1155850.637	2201399.495	690+53.684	34.527 RT	E200
902133	#4 REBAR W CAP	1155795.589	2202043.876	26+10.567	15.434 RT	ARENZVILLE_RD
902130	#4 REBAR W CAP	1154774.677	2201387.101	701+29.711	37.440 RT	E200
902117	#4 REBAR W CAP	1151649.780	2200882.340	160+66.849	69.535 RT	US67_IL100_E102
902107	#4 REBAR W CAP	1148135.724	2200664.179	195+89.735	28.475 LT	EX67
902101	#4 REBAR W CAP	1147523.542	2201107.268	14+11.839	22.081 LT	SPUNKYRIDGE
145083_1	NGS EA 160 - NGS ROD IN VAULT	1146847.324	2200098.954	6+05.311	25.961 LT	BEAUCHAMP
90299	#4 REBAR W CAP	1146735.733	2200441.660	6+14.116	45.661 RT	IL100Y
102	#4 REBAR W CAP	1146218.658	2200249.390	11+59.780	0.458 LT	IL100Y
90296	#4 REBAR W CAP	1145126.156	2201997.198	229+51.413	25.600 LT	EX67
145080	NGS EA 159 - NGS ROD IN VAULT	1143790.552	2202927.783	245+89.849	64.073 LT	EX67
145076	NGS EA 158 - NGS ROD IN VAULT	1140648.500	2206644.492	298+34.595	52.259 LT	EX67

BENCHMARKS

BENCHMARK	NAVD 88 DATUM	DESCRIPTION	STATION	OFFSET	CHAIN
NGS H 255	457.036	NGS DISK IN CONC ON W SIDE OF US67/IL100 AT KUHLMAN RD 'T', 16' S OF CL OF OLD LOGGING RD	458+37.66	37.95 RT	E200
NGS D 243	440.317	NGS DISK IN CONC IN SW QUAD OF US67/IL100 & HONEY POINT RD, 35' S OF SIDE ROAD, NEAR PP	505+62.30	40.05 RT	E200
BM BD-24	442.223	CHSLD [] IN N END OF E CONC HDWL OF 2X2 BOX CULVERT AT CASS/MORGAN CO LINE RD ON US 67 / IL 100	558+45.15	20.87 LT	E200
NGS G 255	441.974	NGS DISK IN CONC, 155' S OF CL CASS MORGAN CO RD, 39.4' W OF CL US67 / IL 100	560+45.94	39.71 RT	E200
BM TM-23	441.397	CHSLD [] IN CENTER OF E CONC HDWL, 0.13 MI S OF CASS/MORG CO LINE ON US 67 / IL 100	566+90.46	27.58 LT	E200
BM TM-21	442.289	CHSLD [] IN CENTER OF E CONC HDWL, 0.60 MI S OF CASS/MORG CO LINE ON US 67 / IL 100	590+63.82	20.27 LT	E200
NGS F 255	443.477	NGS DISK IN CONC 1.14 MI N OF WILLOW CREEK, 13' S OF CL OF N FE, 128' N OF CL OF S FE ON US 67 / IL 100	601+82.03	38.82 RT	E200
BM WS-18	441.630	60D SPIKE NAIL IN W SIDE OF PP, 0.63 MI N OF WILLOW CREEK ON US 67 / IL 100	628+18.13	40.29 LT	E200
BM WS-17	442.948	60D SPIKE NAIL IN W SIDE OF PP, 0.43 MI N OF WILLOW CREEK ON US 67 / IL 100	638+78.15	40.76 LT	E200
BM WS-13	444.868	CHSLD [] IN CENTER OF W CONC HDWL, 150' S OF ARENZVILLE RD ON US 67 / IL 100	692+43.47	20.52 RT	E200
BM RA-14	453.120	CHSLD [] IN CENTER OF CONC HDWL IN SW QUAD OF US 67 / IL 104 / IL 100 JCT TO MEREDOSIA	159+15.81	126.04 RT	US67_IL100_E102
BM WS-10	464.871	CHSLD [] IN W CONC HDWL, 1750' S OF US67/104 JCT TO MEREDOSIA & 375' S OF DEPPE RD ON US 67	175+54.46	43.91 RT	US67_IL100_E102
BM 87	471.590	CHSLD [] IN W CONC HDWL, 0.46 MI N OF IL100 & 950' S OF DEPPE RD ON US 67 / IL 104 / IL 100	181+08.86	44.96 RT	EX67
BM 91	592.447	CHSLD [] ON NW END OF CONC HDWL, 0.85 MI S'ERLY FROM JCT IL100 TO BLUFFS ON US 67 / IL 104	250+15.57	42.12 LT	EX67
BM RA-11	582.869	CHSLD [] ON W CONC HDWL, 1.18 MI S'ERLY FROM JCT IL100 TO BLUFFS ON US 67 / IL 104	268+07.86	59.85 RT	EX67
BM 92	591.776	CHSLD [] IN CENTER OF N'ERLY CONC HDWL, 1.38 MI S'ERLY FROM JCT IL100 TO BLUFFS ON US 67 / IL 104	280+81.73	43.00 LT	EX67
BM 93	596.488	CHSLD [] ON CENTER OF N CONC HDWL TO 24" CULVERT, 0.97 MILE W OF HARTS GRAVEL RD ON US 67 / IL 104	305+74.05	42.47 LT	EX67

MODEL: Survey Sheet 3 [Sheet]
FILE NAME: c:\pw_work\pwidot\carl.johnson@illinois.gov\d0858453\D672263 Sht - Ties and Benchmarks.dgn

USER NAME = carl.johnson	DESIGNED -	REVISED -	
	DRAWN -	REVISED -	
	CHECKED -	REVISED -	
PLOT DATE = 4/3/2025	DATE -	REVISED -	

STATE OF ILLINOIS
DEPARTMENT OF TRANSPORTATION

ALIGNMENT, TIES, AND BENCHMARKS

SCALE: | SHEET A003 OF 4 SHEETS | STA. | TO STA.

F.A.P RTE.	SECTION	COUNTY	TOTAL SHEETS	SHEET NO.
*	(1115BDR, 116SR)RS-5, 124RS-8	MORGAN	69	32

CONTRACT NO. 72263

ILLINOIS | FED. AID PROJECT

*US 67 / IL 100 / IL 104

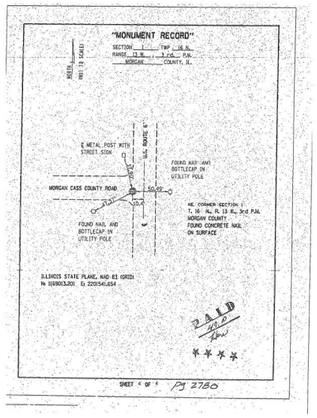

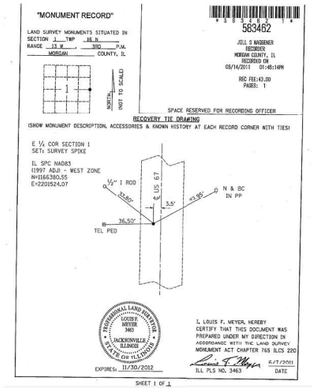

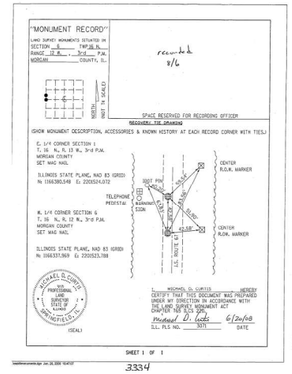

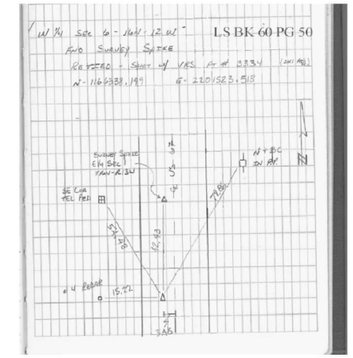

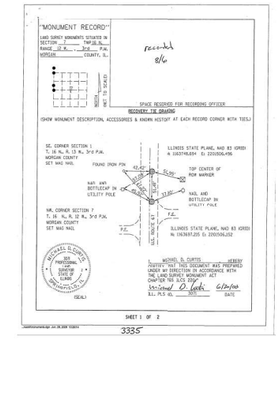

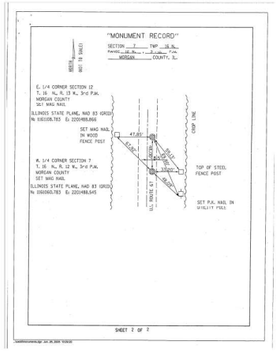

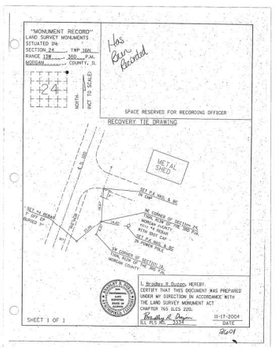

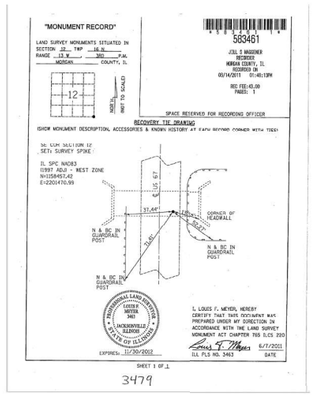

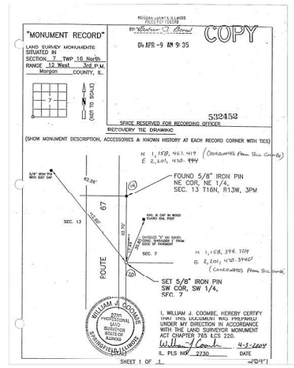

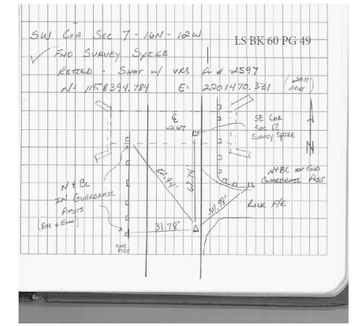

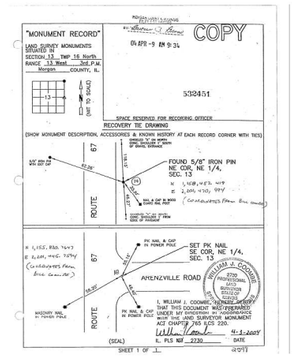

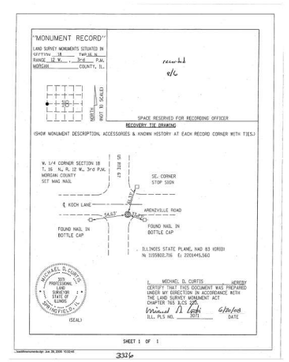

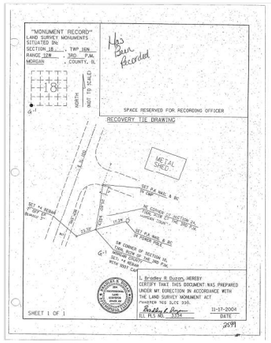

MODEL: Survey Sheet 4 [Sheet]
FILE NAME: c:\pw_work\pwidot\carl.johnson@illinois.gov\d0858453\D672263 Sht - Ties and Benchmarks.dgn

USER NAME = carl.johnson	DESIGNED -	REVISED -	
	DRAWN -	REVISED -	
	CHECKED -	REVISED -	
PLOT DATE = 4/3/2025	DATE -	REVISED -	

STATE OF ILLINOIS
DEPARTMENT OF TRANSPORTATION

ALIGNMENT, TIES, AND BENCHMARKS

SCALE: | SHEET A004 OF 4 SHEETS | STA. | TO STA.

F.A.P RTE.	SECTION	COUNTY	TOTAL SHEETS	SHEET NO.
*	(1115BDR, 116SR)RS-5, 124RS-8	MORGAN	69	33
		CONTRACT NO. 72263		
		ILLINOIS	FED. AID PROJECT	

*US 67 / IL 100 / IL 104

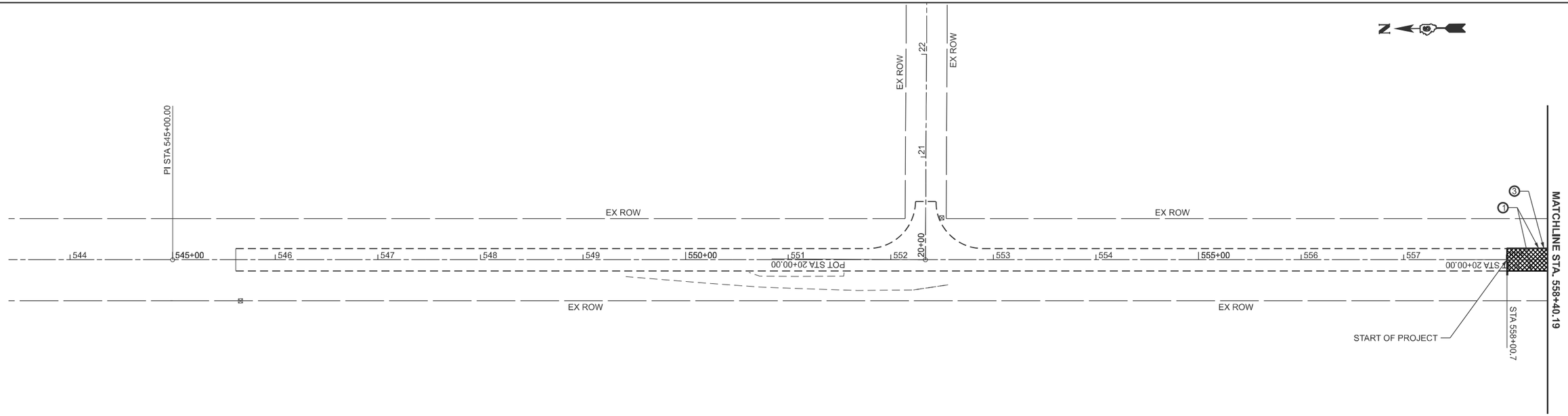

1. PROP. MODIFIED URETHANE PAVEMENT MARKING (WHITE) - LINE 5"
2. PROP. MODIFIED URETHANE PAVEMENT MARKING (WHITE SKIP DASH) - LINE 5"
3. PROP. MODIFIED URETHANE PAVEMENT MARKING (YELLOW SKIP DASH) - LINE 5"
4. PROP. MODIFIED URETHANE PAVEMENT MARKING (YELLOW) - LINE 5"
5. PROP. MODIFIED URETHANE PAVEMENT MARKING (DOUBLE YELLOW) - LINE 5"
6. PROP. MODIFIED URETHANE PAVEMENT MARKING (WHITE) - LINE 6"
7. PROP. MODIFIED URETHANE PAVEMENT MARKING (WHITE SKIP DASH) - LINE 6"
8. PROP. MODIFIED URETHANE PAVEMENT MARKING (WHITE) - LINE 8"
9. PROP. MODIFIED URETHANE PAVEMENT MARKING (WHITE) - LINE 12"
10. PROP. MODIFIED URETHANE PAVEMENT MARKING (YELLOW) - LINE 12"
11. PROP. MODIFIED URETHANE PAVEMENT MARKING (WHITE) - LINE 24
12. PROP. MODIFIED URETHANE PAVEMENT MARKING (WHITE) - LETTERS & SYMBOLS

MODEL: ExCL22 - Plan 23 [Sheet]
FILE NAME: c:\pw_work\pwidot\carl.johnson@illinois.gov\d0858455\D672263-Design Final.dgn

USER NAME = carl.johnson	DESIGNED -	REVISED -	
	DRAWN -	REVISED -	
	CHECKED -	REVISED -	
PLOT DATE = 4/3/2025	DATE -	REVISED -	

STATE OF ILLINOIS
DEPARTMENT OF TRANSPORTATION

US 67 PLAN SHEETS

SCALE: 1"=50' | SHEET 1 OF 14 SHEETS | STA. 543+40.19 TO STA. 558+40.19

F.A.P RTE.	SECTION	COUNTY	TOTAL SHEETS	SHEET NO.
*	(1115BDR, 116SR)RS-5, 124RS-8	MORGAN	69	34
		CONTRACT NO. 72263		
	ILLINOIS	FED. AID PROJECT		

*US 67 / IL 100 / IL 104

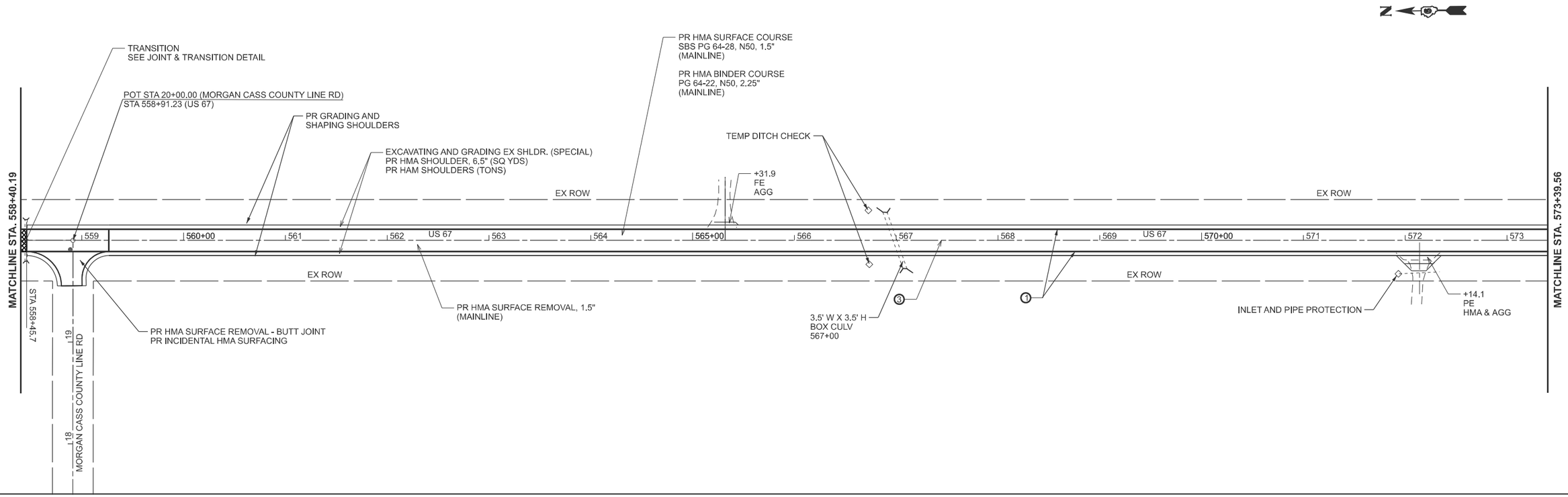

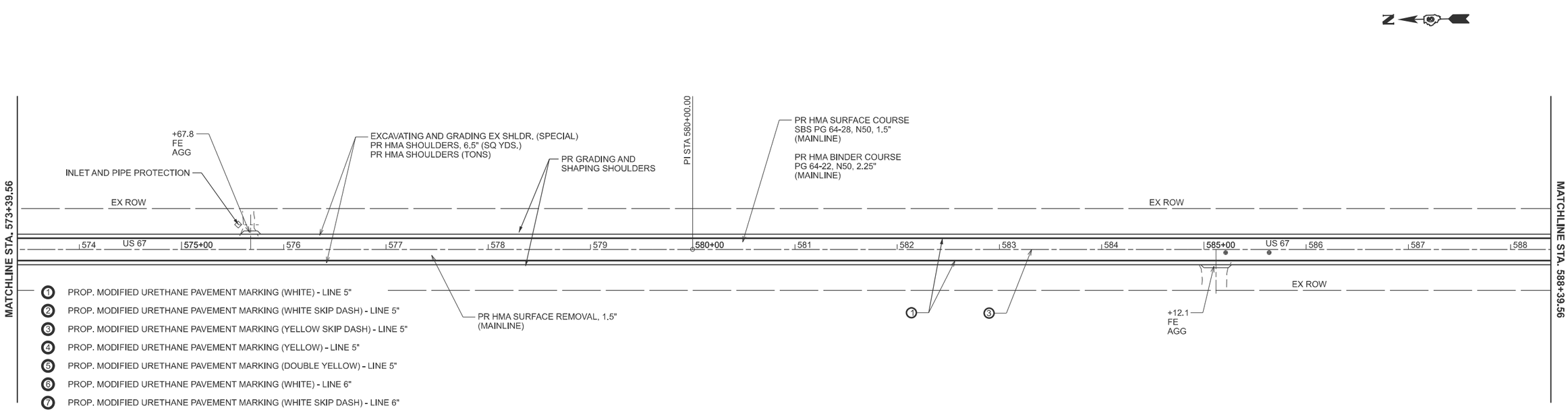

1. PROP. MODIFIED URETHANE PAVEMENT MARKING (WHITE) - LINE 5"
2. PROP. MODIFIED URETHANE PAVEMENT MARKING (WHITE SKIP DASH) - LINE 5"
3. PROP. MODIFIED URETHANE PAVEMENT MARKING (YELLOW SKIP DASH) - LINE 5"
4. PROP. MODIFIED URETHANE PAVEMENT MARKING (YELLOW) - LINE 5"
5. PROP. MODIFIED URETHANE PAVEMENT MARKING (DOUBLE YELLOW) - LINE 5"
6. PROP. MODIFIED URETHANE PAVEMENT MARKING (WHITE) - LINE 6"
7. PROP. MODIFIED URETHANE PAVEMENT MARKING (WHITE SKIP DASH) - LINE 6"
8. PROP. MODIFIED URETHANE PAVEMENT MARKING (WHITE) - LINE 8"
9. PROP. MODIFIED URETHANE PAVEMENT MARKING (WHITE) - LINE 12"
10. PROP. MODIFIED URETHANE PAVEMENT MARKING (YELLOW) - LINE 12"
11. PROP. MODIFIED URETHANE PAVEMENT MARKING (WHITE) - LINE 24
12. PROP. MODIFIED URETHANE PAVEMENT MARKING (WHITE) - LETTERS & SYMBOLS

USER NAME = carl.johnson	DESIGNED -	REVISED -	
	DRAWN -	REVISED -	
	CHECKED -	REVISED -	
PLOT DATE = 4/3/2025	DATE -	REVISED -	

STATE OF ILLINOIS
DEPARTMENT OF TRANSPORTATION

US 67 PLAN SHEETS

SCALE: 1"=50' | SHEET 2 OF 14 SHEETS | STA. 558+39.56 TO STA. 588+39.56

F.A.P RTE.	SECTION	COUNTY	TOTAL SHEETS	SHEET NO.
*	(1115BDR, 116SR)RS-5, 124RS-8	MORGAN	69	35
		CONTRACT NO. 72263		
		ILLINOIS FED. AID PROJECT		

*US 67 / IL 100 / IL 104

MODEL: ExCL18 - Plan 1 [Sheet]
FILE NAME: c:\pw_work\pwidot\carl.johnson@illinois.gov\d0858455\D672263-Design Final.dgn

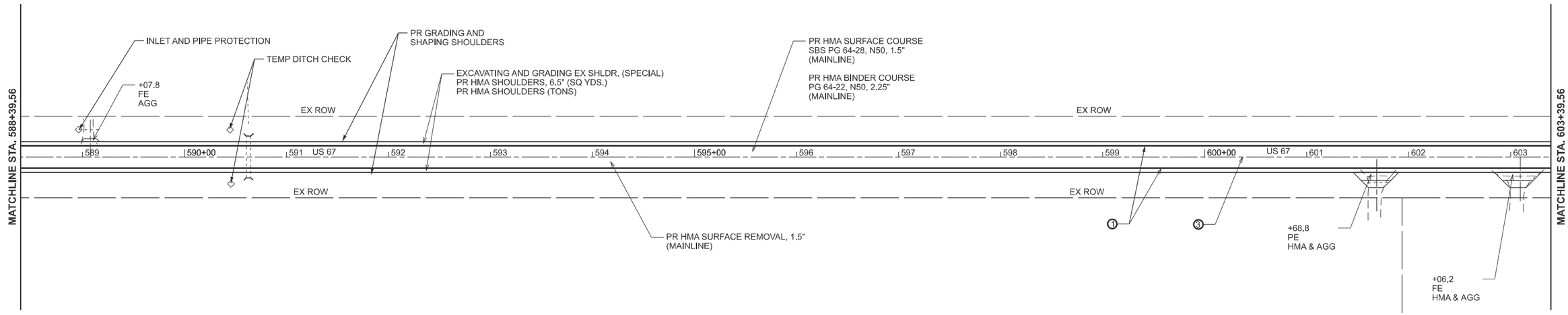

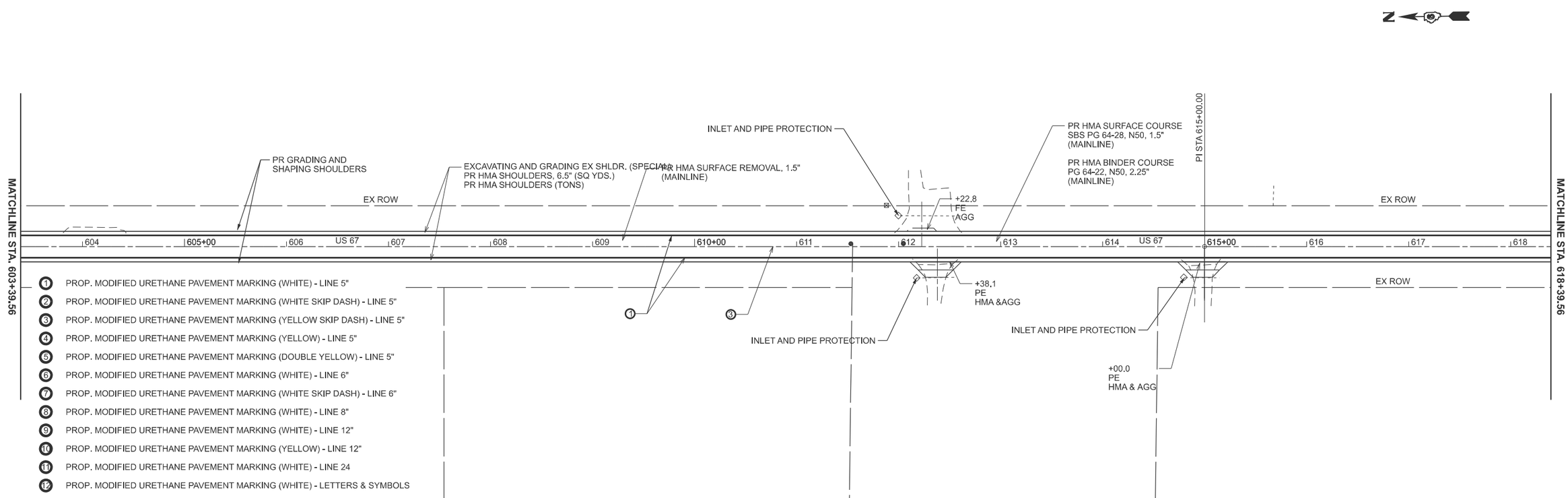

1. PROP. MODIFIED URETHANE PAVEMENT MARKING (WHITE) - LINE 5"
2. PROP. MODIFIED URETHANE PAVEMENT MARKING (WHITE SKIP DASH) - LINE 5"
3. PROP. MODIFIED URETHANE PAVEMENT MARKING (YELLOW SKIP DASH) - LINE 5"
4. PROP. MODIFIED URETHANE PAVEMENT MARKING (YELLOW) - LINE 5"
5. PROP. MODIFIED URETHANE PAVEMENT MARKING (DOUBLE YELLOW) - LINE 5"
6. PROP. MODIFIED URETHANE PAVEMENT MARKING (WHITE) - LINE 6"
7. PROP. MODIFIED URETHANE PAVEMENT MARKING (WHITE SKIP DASH) - LINE 6"
8. PROP. MODIFIED URETHANE PAVEMENT MARKING (WHITE) - LINE 8"
9. PROP. MODIFIED URETHANE PAVEMENT MARKING (WHITE) - LINE 12"
10. PROP. MODIFIED URETHANE PAVEMENT MARKING (YELLOW) - LINE 12"
11. PROP. MODIFIED URETHANE PAVEMENT MARKING (WHITE) - LINE 24
12. PROP. MODIFIED URETHANE PAVEMENT MARKING (WHITE) - LETTERS & SYMBOLS

USER NAME = carl.johnson	DESIGNED -	REVISED -	
	DRAWN -	REVISED -	
	CHECKED -	REVISED -	
PLOT DATE = 4/3/2025	DATE -	REVISED -	

STATE OF ILLINOIS
DEPARTMENT OF TRANSPORTATION

US 67 PLAN SHEETS

SCALE: 1"=50' | SHEET 3 OF 14 SHEETS | STA. 588+39.56 TO STA. 618+39.56

F.A.P RTE.	SECTION	COUNTY	TOTAL SHEETS	SHEET NO.
*	(1115BDR, 116SR)RS-5, 124RS-8	MORGAN	69	36
		CONTRACT NO. 72263		
		ILLINOIS FED. AID PROJECT		

*US 67 / IL 100 / IL 104

MODEL: ExCL18 - Plan 3 [Sheet]
FILE NAME: c:\pw_work\pwidot\carl.johnson@illinois.gov\d0858455\D672263-Design Final.dgn

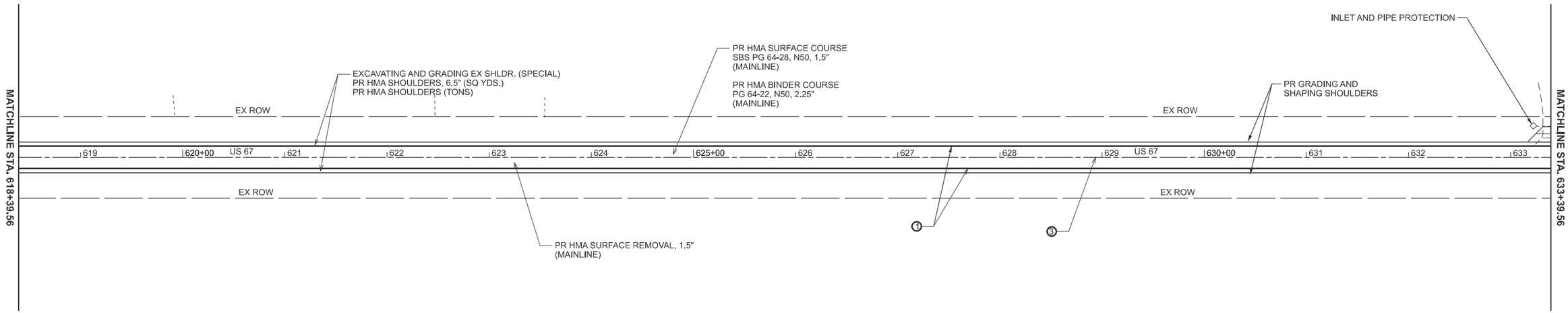

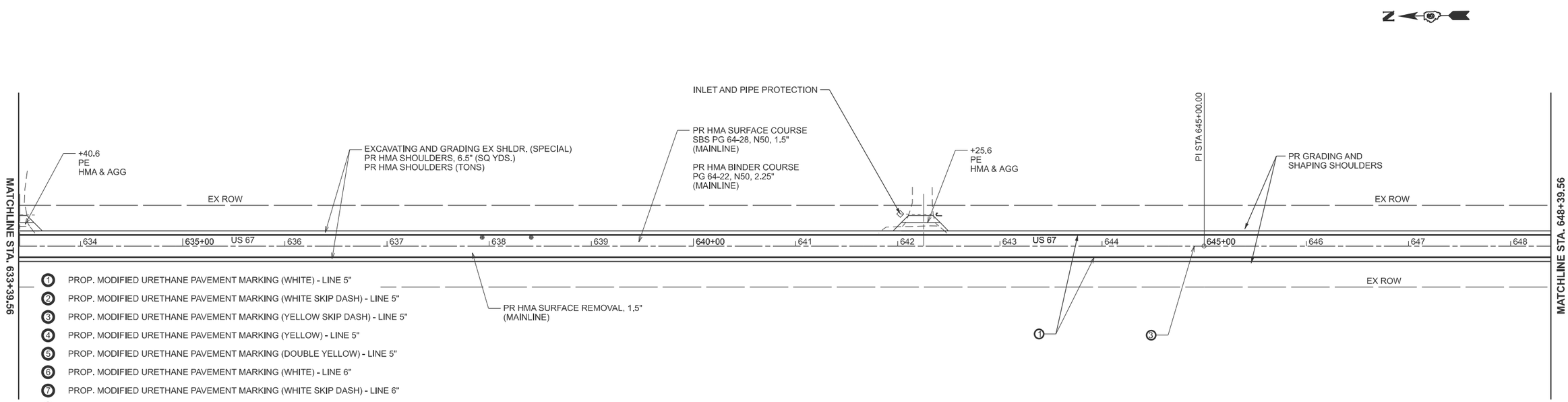

1. PROP. MODIFIED URETHANE PAVEMENT MARKING (WHITE) - LINE 5"
2. PROP. MODIFIED URETHANE PAVEMENT MARKING (WHITE SKIP DASH) - LINE 5"
3. PROP. MODIFIED URETHANE PAVEMENT MARKING (YELLOW SKIP DASH) - LINE 5"
4. PROP. MODIFIED URETHANE PAVEMENT MARKING (YELLOW) - LINE 5"
5. PROP. MODIFIED URETHANE PAVEMENT MARKING (DOUBLE YELLOW) - LINE 5"
6. PROP. MODIFIED URETHANE PAVEMENT MARKING (WHITE) - LINE 6"
7. PROP. MODIFIED URETHANE PAVEMENT MARKING (WHITE SKIP DASH) - LINE 6"
8. PROP. MODIFIED URETHANE PAVEMENT MARKING (WHITE) - LINE 8"
9. PROP. MODIFIED URETHANE PAVEMENT MARKING (WHITE) - LINE 12"
10. PROP. MODIFIED URETHANE PAVEMENT MARKING (YELLOW) - LINE 12"
11. PROP. MODIFIED URETHANE PAVEMENT MARKING (WHITE) - LINE 24
12. PROP. MODIFIED URETHANE PAVEMENT MARKING (WHITE) - LETTERS & SYMBOLS

MODEL: ExCL18 - Plan 5 [Sheet]
FILE NAME: c:\pw_work\pwidot\carl.johnson@illinois.gov\d0858455\D672263-Design Final.dgn

USER NAME = carl.johnson	DESIGNED -	REVISED -	
	DRAWN -	REVISED -	
	CHECKED -	REVISED -	
PLOT DATE = 4/3/2025	DATE -	REVISED -	

STATE OF ILLINOIS
DEPARTMENT OF TRANSPORTATION

US 67 PLAN SHEETS

SCALE: 1"=50' | SHEET 4 OF 14 SHEETS | STA. 618+39.56 | TO STA. 648+39.56

F.A.P RTE.	SECTION	COUNTY	TOTAL SHEETS	SHEET NO.
*	(1115BDR, 116SR)RS-5, 124RS-8	MORGAN	69	37
		CONTRACT NO. 72263		
		ILLINOIS FED. AID PROJECT		

*US 67 / IL 100 / IL 104

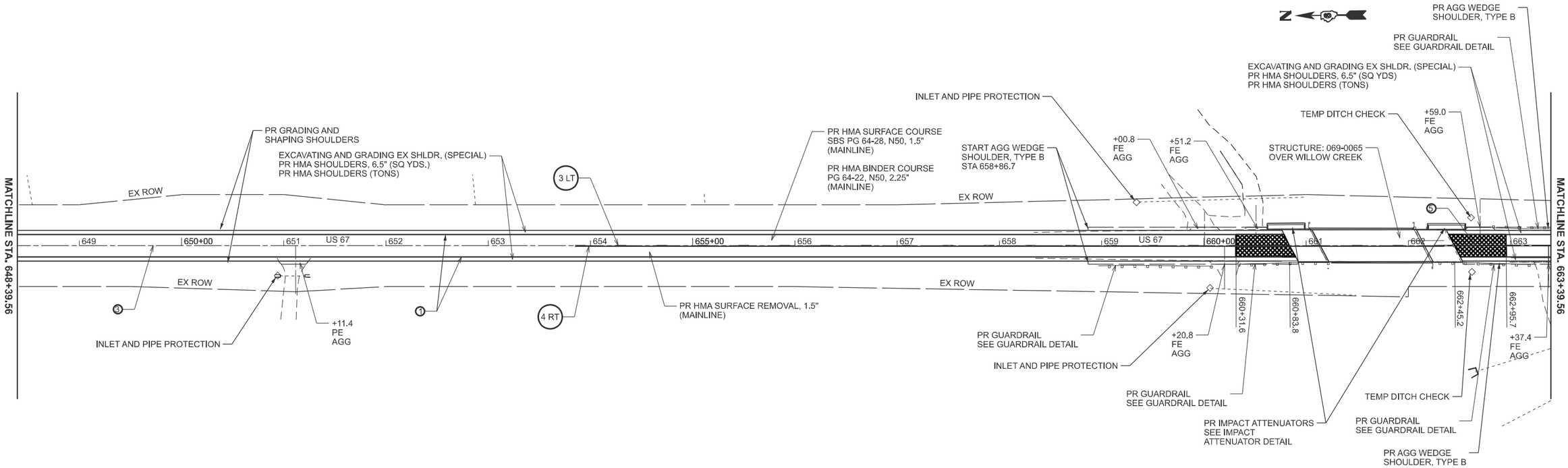

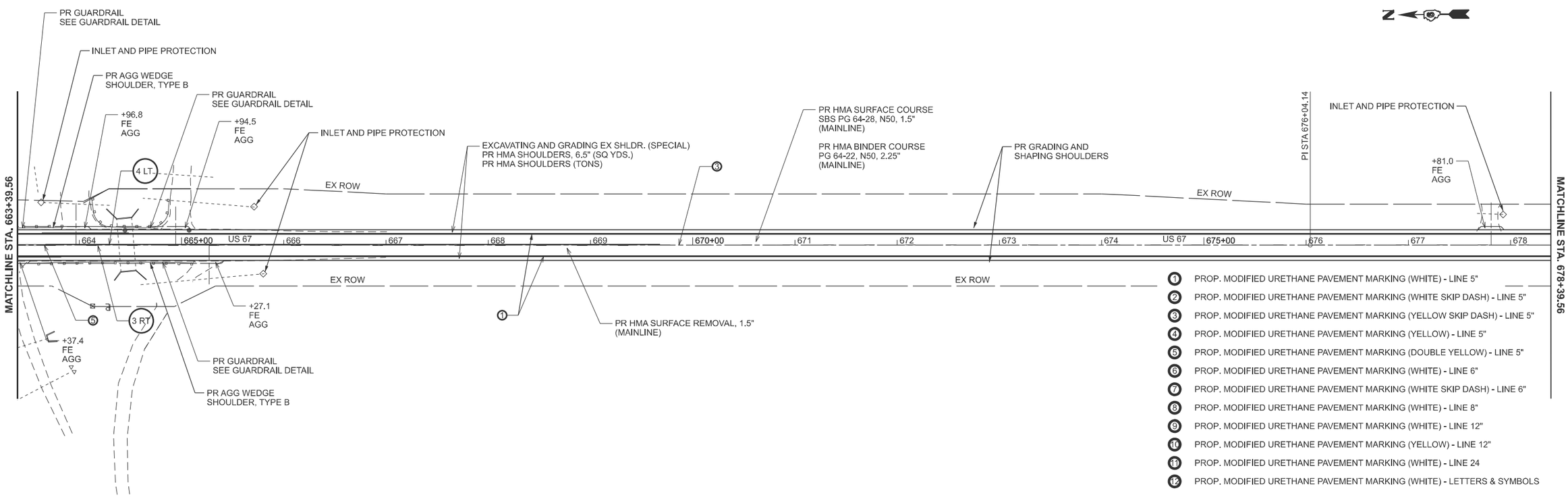

1. PROP. MODIFIED URETHANE PAVEMENT MARKING (WHITE) - LINE 5"
2. PROP. MODIFIED URETHANE PAVEMENT MARKING (WHITE SKIP DASH) - LINE 5"
3. PROP. MODIFIED URETHANE PAVEMENT MARKING (YELLOW SKIP DASH) - LINE 5"
4. PROP. MODIFIED URETHANE PAVEMENT MARKING (YELLOW) - LINE 5"
5. PROP. MODIFIED URETHANE PAVEMENT MARKING (DOUBLE YELLOW) - LINE 5"
6. PROP. MODIFIED URETHANE PAVEMENT MARKING (WHITE) - LINE 6"
7. PROP. MODIFIED URETHANE PAVEMENT MARKING (WHITE SKIP DASH) - LINE 6"
8. PROP. MODIFIED URETHANE PAVEMENT MARKING (WHITE) - LINE 8"
9. PROP. MODIFIED URETHANE PAVEMENT MARKING (WHITE) - LINE 12"
10. PROP. MODIFIED URETHANE PAVEMENT MARKING (YELLOW) - LINE 12"
11. PROP. MODIFIED URETHANE PAVEMENT MARKING (WHITE) - LINE 24
12. PROP. MODIFIED URETHANE PAVEMENT MARKING (WHITE) - LETTERS & SYMBOLS

MODEL: ExCL18 - Plan 7 [Sheet]
FILE NAME: c:\pw_work\pwidot\carl.johnson@illinois.gov\d0858455\D672263-Design Final.dgn

USER NAME = carl.johnson	DESIGNED -	REVISED -	
	DRAWN -	REVISED -	
	CHECKED -	REVISED -	
PLOT DATE = 4/3/2025	DATE -	REVISED -	

STATE OF ILLINOIS
DEPARTMENT OF TRANSPORTATION

US 67 PLAN SHEETS

SCALE: 1"=50' | SHEET 5 OF 14 SHEETS | STA. | TO STA.

F.A.P RTE.	SECTION	COUNTY	TOTAL SHEETS	SHEET NO.
*	(1115BDR, 116SR)RS-5, 124RS-8	MORGAN	69	38
		CONTRACT NO. 72263		
	ILLINOIS	FED. AID PROJECT		

*US 67 / IL 100 / IL 104

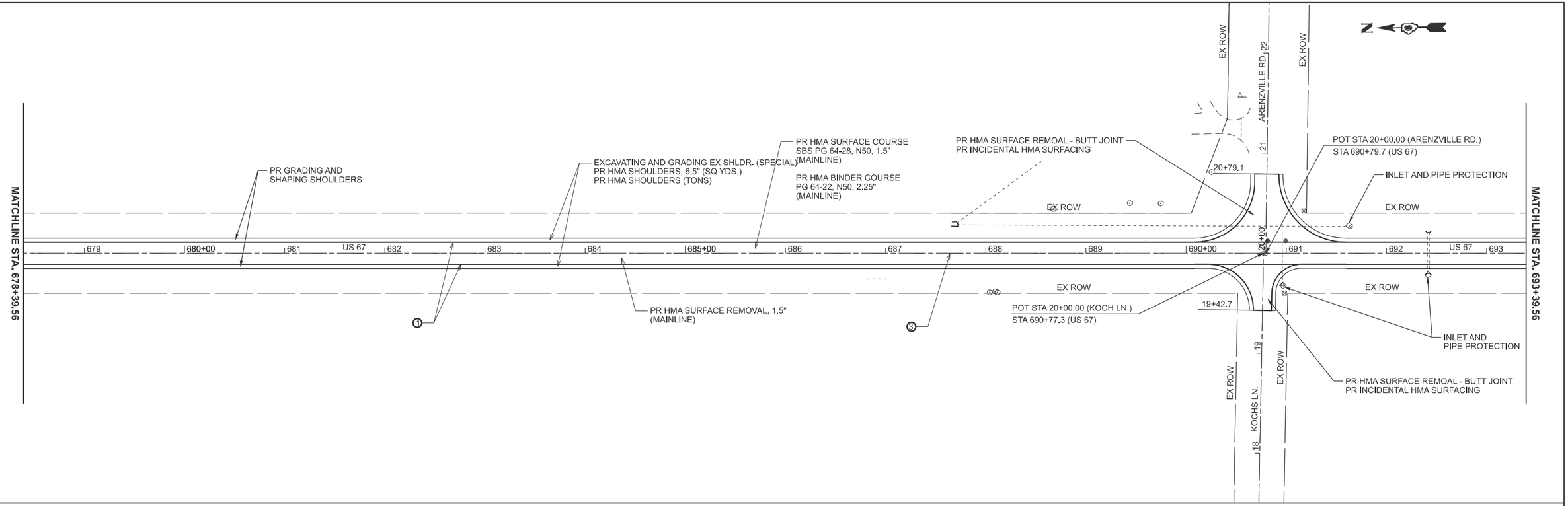

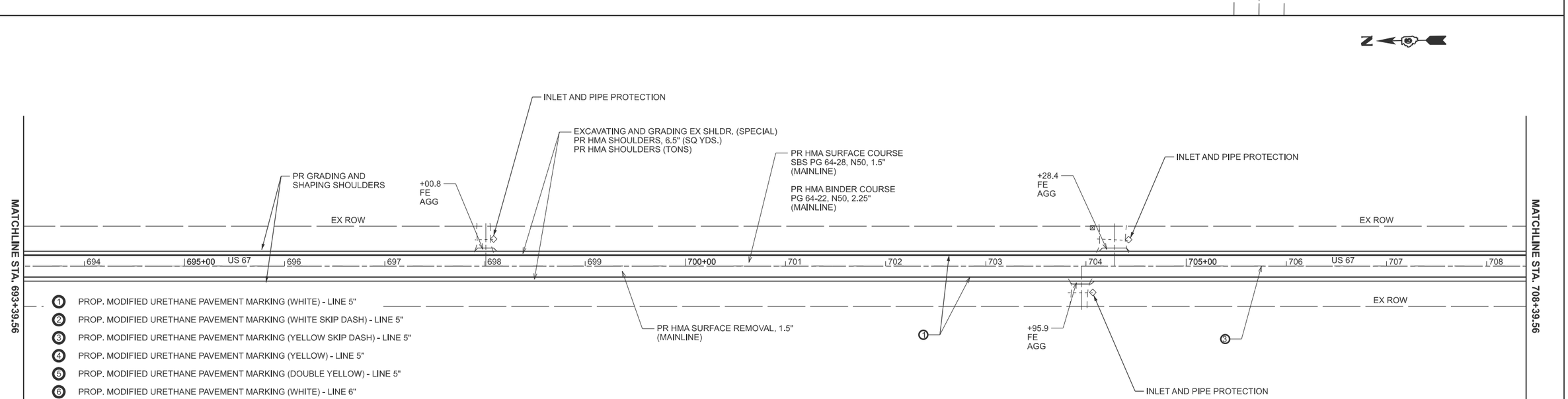

1. PROP. MODIFIED URETHANE PAVEMENT MARKING (WHITE) - LINE 5"
2. PROP. MODIFIED URETHANE PAVEMENT MARKING (WHITE SKIP DASH) - LINE 5"
3. PROP. MODIFIED URETHANE PAVEMENT MARKING (YELLOW SKIP DASH) - LINE 5"
4. PROP. MODIFIED URETHANE PAVEMENT MARKING (YELLOW) - LINE 5"
5. PROP. MODIFIED URETHANE PAVEMENT MARKING (DOUBLE YELLOW) - LINE 5"
6. PROP. MODIFIED URETHANE PAVEMENT MARKING (WHITE) - LINE 6"
7. PROP. MODIFIED URETHANE PAVEMENT MARKING (WHITE SKIP DASH) - LINE 6"
8. PROP. MODIFIED URETHANE PAVEMENT MARKING (WHITE) - LINE 8"
9. PROP. MODIFIED URETHANE PAVEMENT MARKING (WHITE) - LINE 12"
10. PROP. MODIFIED URETHANE PAVEMENT MARKING (YELLOW) - LINE 12"
11. PROP. MODIFIED URETHANE PAVEMENT MARKING (WHITE) - LINE 24
12. PROP. MODIFIED URETHANE PAVEMENT MARKING (WHITE) - LETTERS & SYMBOLS

USER NAME = carl.johnson	DESIGNED -	REVISED -	STATE OF ILLINOIS DEPARTMENT OF TRANSPORTATION
	DRAWN -	REVISED -	
	CHECKED -	REVISED -	
PLOT DATE = 4/3/2025	DATE -	REVISED -	

US 67 PLAN SHEETS

SCALE: 1"=50' | SHEET 6 OF 14 SHEETS | STA. 678+39.56 TO STA. 708+39.56

F.A.P RTE.	SECTION	COUNTY	TOTAL SHEETS	SHEET NO.
*	(1115BDR, 116SR)RS-5, 124RS-8	MORGAN	69	39

CONTRACT NO. 72263

ILLINOIS | FED. AID PROJECT

*US 67 / IL 100 / IL 104

MODEL: ExCL18 - Plan 9 [Sheet]
FILE NAME: c:\pw_work\pwidot\carl.johnson@illinois.gov\d0858455\D672263-Design Final.dgn

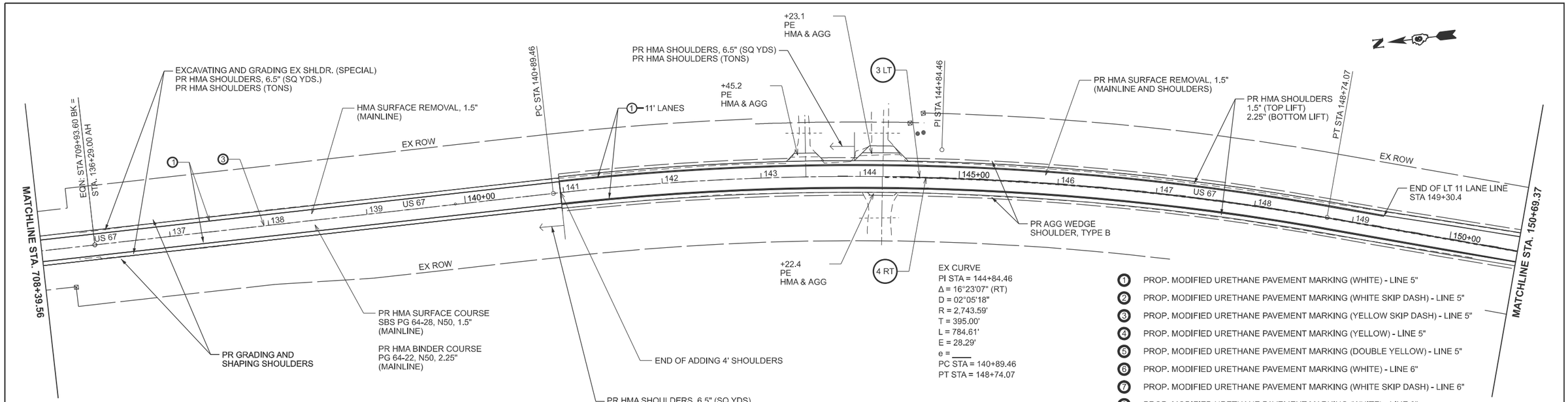

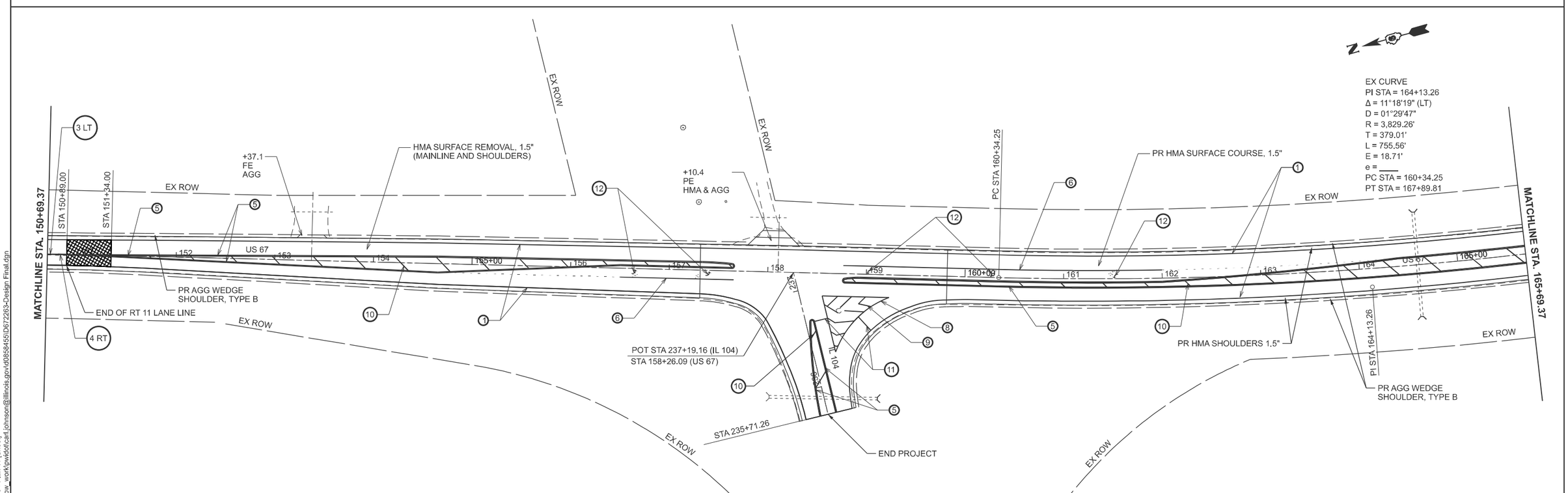

MODEL: ExCL18 - Plan 11 [Sheet]
FILE NAME: c:\pw_work\pwidot\carl.johnson\d0858455\D672263-Design Final.dgn

USER NAME = carl.johnson	DESIGNED -	REVISED -	
	DRAWN -	REVISED -	
	CHECKED -	REVISED -	
PLOT DATE = 4/3/2025	DATE -	REVISED -	

STATE OF ILLINOIS
DEPARTMENT OF TRANSPORTATION

US 67 PLAN SHEETS

SCALE: 1"=50' | SHEET 7 OF 14 SHEETS | STA. 708+39.56 TO STA. 165+69.37 R2

F.A.P RTE.	SECTION	COUNTY	TOTAL SHEETS	SHEET NO.
*	(1115BDR, 116SR)RS-5, 124RS-8	MORGAN	69	40

CONTRACT NO. 72263

ILLINOIS | FED. AID PROJECT

*US 67 / IL 100 / IL 104

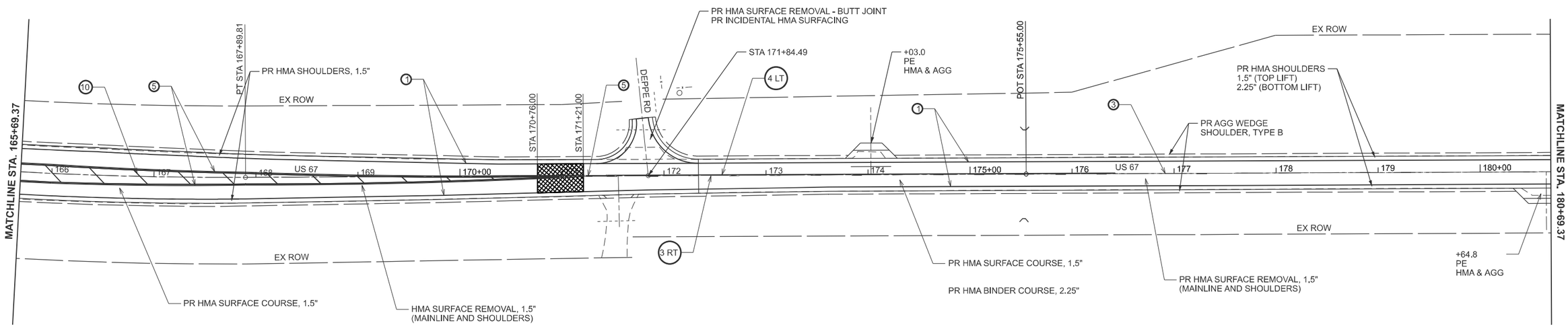

1. PROP. MODIFIED URETHANE PAVEMENT MARKING (WHITE) - LINE 5"
2. PROP. MODIFIED URETHANE PAVEMENT MARKING (WHITE SKIP DASH) - LINE 5"
3. PROP. MODIFIED URETHANE PAVEMENT MARKING (YELLOW SKIP DASH) - LINE 5"
4. PROP. MODIFIED URETHANE PAVEMENT MARKING (YELLOW) - LINE 5"
5. PROP. MODIFIED URETHANE PAVEMENT MARKING (DOUBLE YELLOW) - LINE 5"
6. PROP. MODIFIED URETHANE PAVEMENT MARKING (WHITE) - LINE 6"
7. PROP. MODIFIED URETHANE PAVEMENT MARKING (WHITE SKIP DASH) - LINE 6"
8. PROP. MODIFIED URETHANE PAVEMENT MARKING (WHITE) - LINE 8"
9. PROP. MODIFIED URETHANE PAVEMENT MARKING (WHITE) - LINE 12"
10. PROP. MODIFIED URETHANE PAVEMENT MARKING (YELLOW) - LINE 12"
11. PROP. MODIFIED URETHANE PAVEMENT MARKING (WHITE) - LINE 24
12. PROP. MODIFIED URETHANE PAVEMENT MARKING (WHITE) - LETTERS & SYMBOLS

EX CURVE
PI STA = 200+20.11
Δ = 35°16'00" (LT)
D = 01° 21'58"
R = 4,194.49'
T = 1,333.26'
L = 2581.80'
E = 206.80'
e =
PC STA = 186+86.85
PT STA = 212+99.99

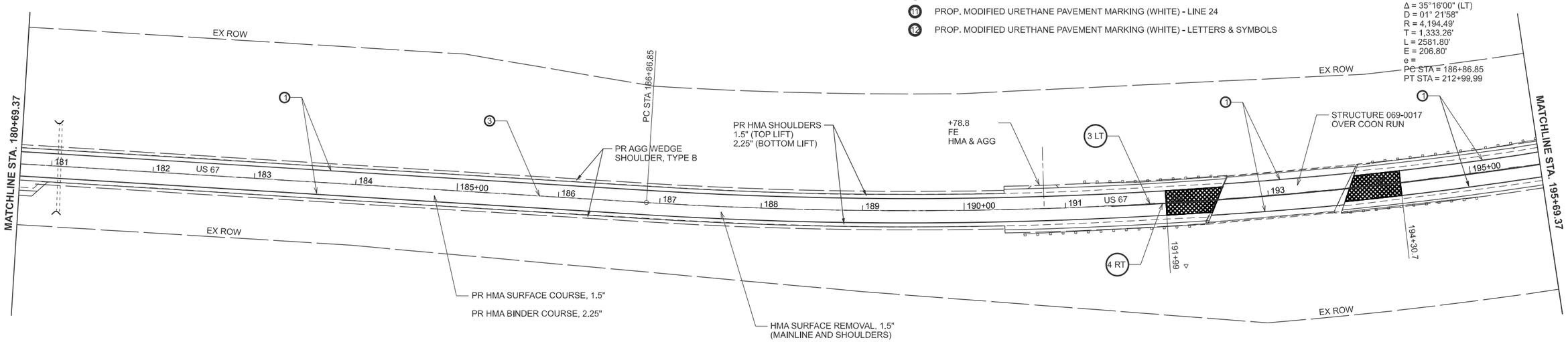

MODEL: EXCL18 - Plan 13 [Sheet]
FILE NAME: c:\pw_work\pwidot\carl.johnson@illinois.gov\d0858455\D672263-Design Final.dgn

USER NAME = carl.johnson	DESIGNED -	REVISED -	
	DRAWN -	REVISED -	
	CHECKED -	REVISED -	
PLOT DATE = 4/3/2025	DATE -	REVISED -	

STATE OF ILLINOIS
DEPARTMENT OF TRANSPORTATION

US 67 PLAN SHEETS

SCALE: 1"=50' | SHEET 8 OF 14 SHEETS | STA. 165+69.37 R2 TO STA. 195+69.37 R2

F.A.P RTE.	SECTION	COUNTY	TOTAL SHEETS	SHEET NO.
*	(1115BDR, 116SR)RS-5, 124RS-8	MORGAN	69	41
		CONTRACT NO. 72263		
		ILLINOIS	FED. AID PROJECT	

*US 67 / IL 100 / IL 104

1. PROP. MODIFIED URETHANE PAVEMENT MARKING (WHITE) - LINE 5"
2. PROP. MODIFIED URETHANE PAVEMENT MARKING (WHITE SKIP DASH) - LINE 5"
3. PROP. MODIFIED URETHANE PAVEMENT MARKING (YELLOW SKIP DASH) - LINE 5"
4. PROP. MODIFIED URETHANE PAVEMENT MARKING (YELLOW) - LINE 5"
5. PROP. MODIFIED URETHANE PAVEMENT MARKING (DOUBLE YELLOW) - LINE 5"
6. PROP. MODIFIED URETHANE PAVEMENT MARKING (WHITE) - LINE 6"
7. PROP. MODIFIED URETHANE PAVEMENT MARKING (WHITE SKIP DASH) - LINE 6"
8. PROP. MODIFIED URETHANE PAVEMENT MARKING (WHITE) - LINE 8"
9. PROP. MODIFIED URETHANE PAVEMENT MARKING (WHITE) - LINE 12"
10. PROP. MODIFIED URETHANE PAVEMENT MARKING (YELLOW) - LINE 12"
11. PROP. MODIFIED URETHANE PAVEMENT MARKING (WHITE) - LINE 24
12. PROP. MODIFIED URETHANE PAVEMENT MARKING (WHITE) - LETTERS & SYMBOLS

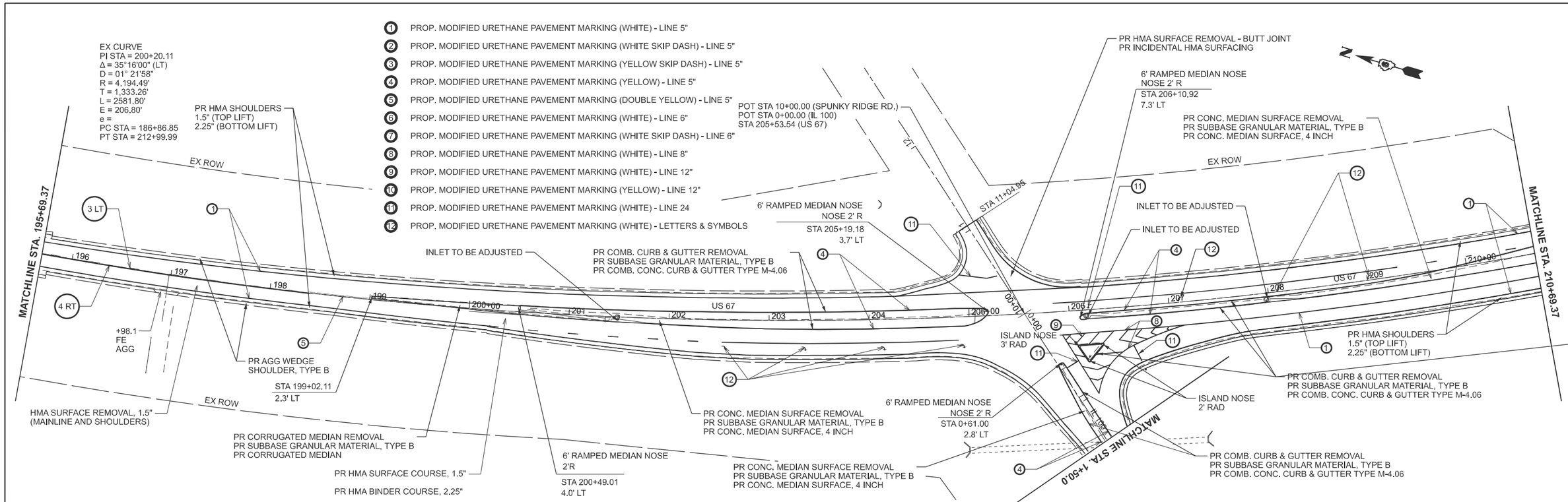

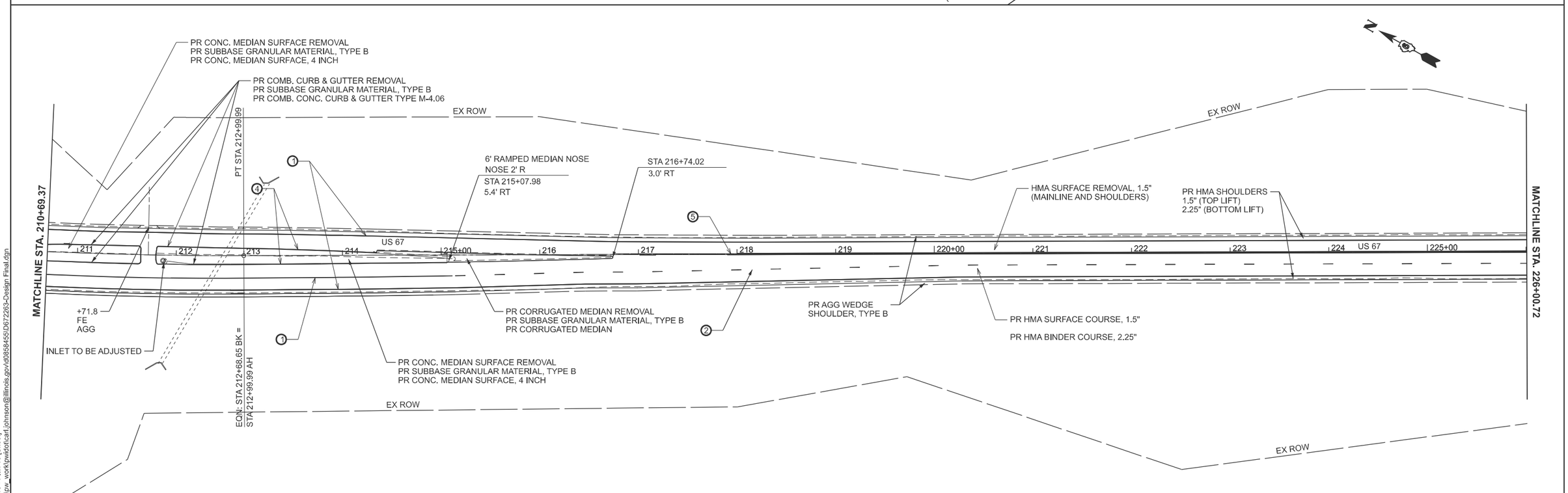

MODEL: ExCL18 - Plan 15 [Sheet]
FILE NAME: c:\pw_work\pwidot\carl.johnson@illinois.gov\d0858455\D672263-Design Final.dgn

USER NAME = carl.johnson	DESIGNED -	REVISED -	
	DRAWN -	REVISED -	
	CHECKED -	REVISED -	
PLOT DATE = 4/3/2025	DATE -	REVISED -	

STATE OF ILLINOIS
DEPARTMENT OF TRANSPORTATION

US 67 PLAN SHEETS

SCALE: 1"=50' | SHEET 9 OF 14 SHEETS | STA. | TO STA.

F.A.P RTE.	SECTION	COUNTY	TOTAL SHEETS	SHEET NO.
*	(1115BDR, 116SR)RS-5, 124RS-8	MORGAN	69	42

CONTRACT NO. 72263

ILLINOIS | FED. AID PROJECT

*US 67 / IL 100 / IL 104

1. PROP. MODIFIED URETHANE PAVEMENT MARKING (WHITE) - LINE 5"
2. PROP. MODIFIED URETHANE PAVEMENT MARKING (WHITE SKIP DASH) - LINE 5"
3. PROP. MODIFIED URETHANE PAVEMENT MARKING (YELLOW SKIP DASH) - LINE 5"
4. PROP. MODIFIED URETHANE PAVEMENT MARKING (YELLOW) - LINE 5"
5. PROP. MODIFIED URETHANE PAVEMENT MARKING (DOUBLE YELLOW) - LINE 5"
6. PROP. MODIFIED URETHANE PAVEMENT MARKING (WHITE) - LINE 6"
7. PROP. MODIFIED URETHANE PAVEMENT MARKING (WHITE SKIP DASH) - LINE 6"
8. PROP. MODIFIED URETHANE PAVEMENT MARKING (WHITE) - LINE 8"
9. PROP. MODIFIED URETHANE PAVEMENT MARKING (WHITE) - LINE 12"
10. PROP. MODIFIED URETHANE PAVEMENT MARKING (YELLOW) - LINE 12"
11. PROP. MODIFIED URETHANE PAVEMENT MARKING (WHITE) - LINE 24
12. PROP. MODIFIED URETHANE PAVEMENT MARKING (WHITE) - LETTERS & SYMBOLS

EX CURVE
PI STA = 239+17.37
Δ = 09°20'29" (LT)
D = 00°59'56"
R = 5,735.55'
T = 468.60'
L = 935.12'
E = 19.11'
e = ____
PC STA = 234+48.77
PT STA = 243+83.89

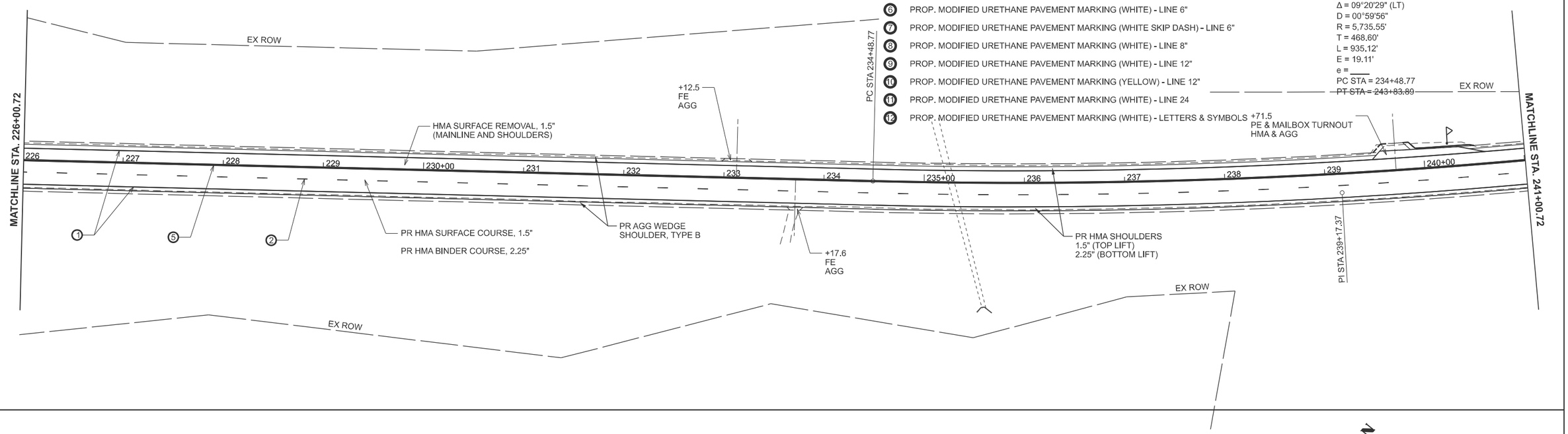

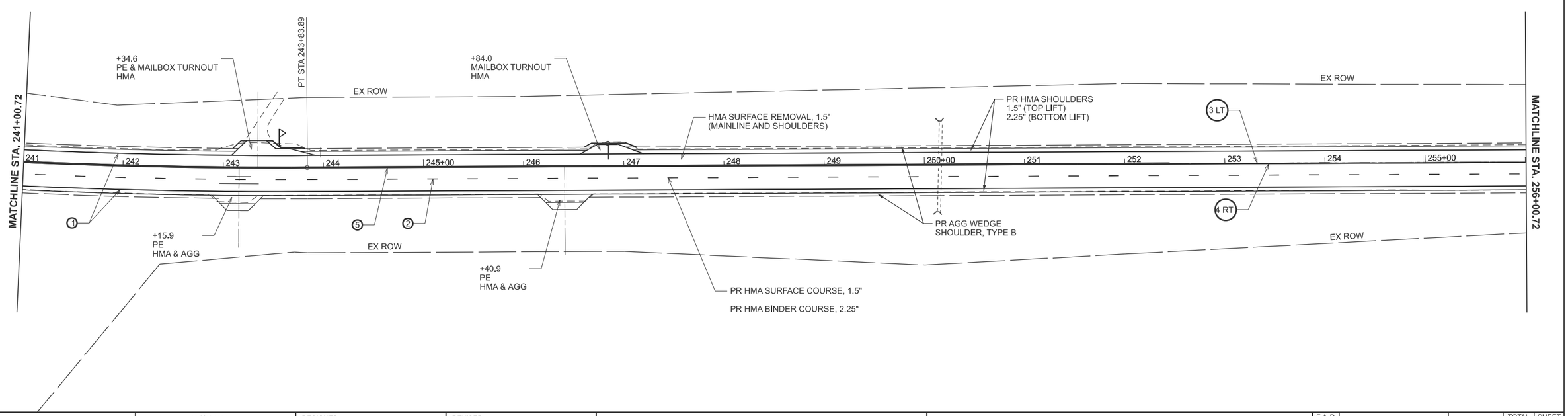

MODEL: ExCL18 - Plan 17 [Sheet]
FILE NAME: c:\pw_work\pwidot\carl.johnson@illinois.gov\d0858455\D672263-Design Final.dgn

USER NAME = carl.johnson	DESIGNED -	REVISED -	
	DRAWN -	REVISED -	
	CHECKED -	REVISED -	
PLOT DATE = 4/3/2025	DATE -	REVISED -	

STATE OF ILLINOIS
DEPARTMENT OF TRANSPORTATION

US 67 PLAN SHEETS

SCALE: 1"=50' | SHEET 10 OF 14 SHEETS | STA. | TO STA.

F.A.P RTE.	SECTION	COUNTY	TOTAL SHEETS	SHEET NO.
*	(1115BDR, 116SR)RS-5, 124RS-8	MORGAN	69	43

CONTRACT NO. 72263

ILLINOIS | FED. AID PROJECT

*US 67 / IL 100 / IL 104

1. PROP. MODIFIED URETHANE PAVEMENT MARKING (WHITE) - LINE 5"
2. PROP. MODIFIED URETHANE PAVEMENT MARKING (WHITE SKIP DASH) - LINE 5"
3. PROP. MODIFIED URETHANE PAVEMENT MARKING (YELLOW SKIP DASH) - LINE 5"
4. PROP. MODIFIED URETHANE PAVEMENT MARKING (YELLOW) - LINE 5"
5. PROP. MODIFIED URETHANE PAVEMENT MARKING (DOUBLE YELLOW) - LINE 5"
6. PROP. MODIFIED URETHANE PAVEMENT MARKING (WHITE) - LINE 6"
7. PROP. MODIFIED URETHANE PAVEMENT MARKING (WHITE SKIP DASH) - LINE 6"
8. PROP. MODIFIED URETHANE PAVEMENT MARKING (WHITE) - LINE 8"
9. PROP. MODIFIED URETHANE PAVEMENT MARKING (WHITE) - LINE 12"
10. PROP. MODIFIED URETHANE PAVEMENT MARKING (YELLOW) - LINE 12"
11. PROP. MODIFIED URETHANE PAVEMENT MARKING (WHITE) - LINE 24
12. PROP. MODIFIED URETHANE PAVEMENT MARKING (WHITE) - LETTERS & SYMBOLS

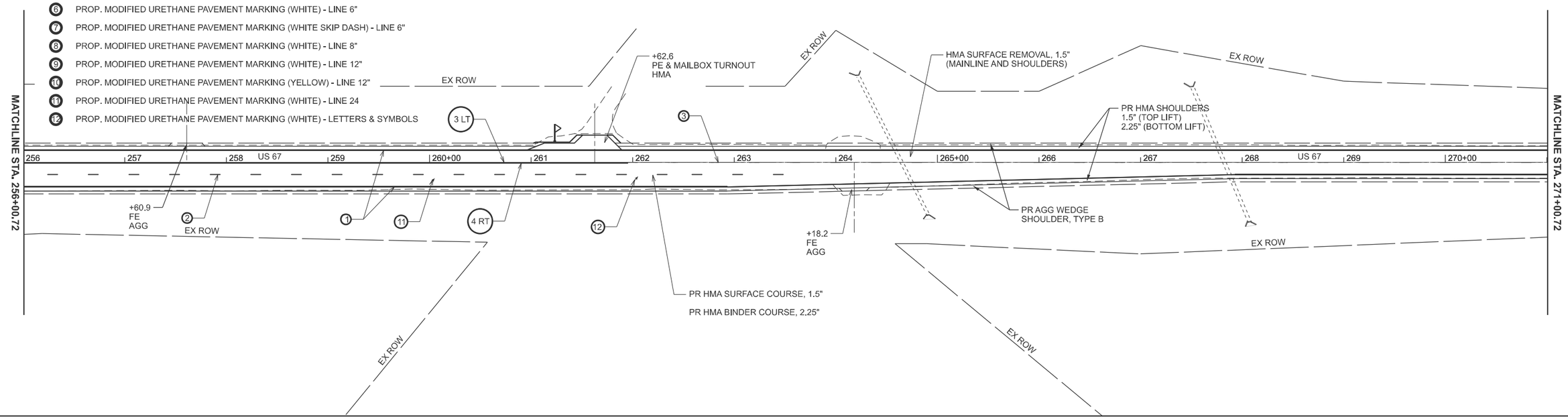

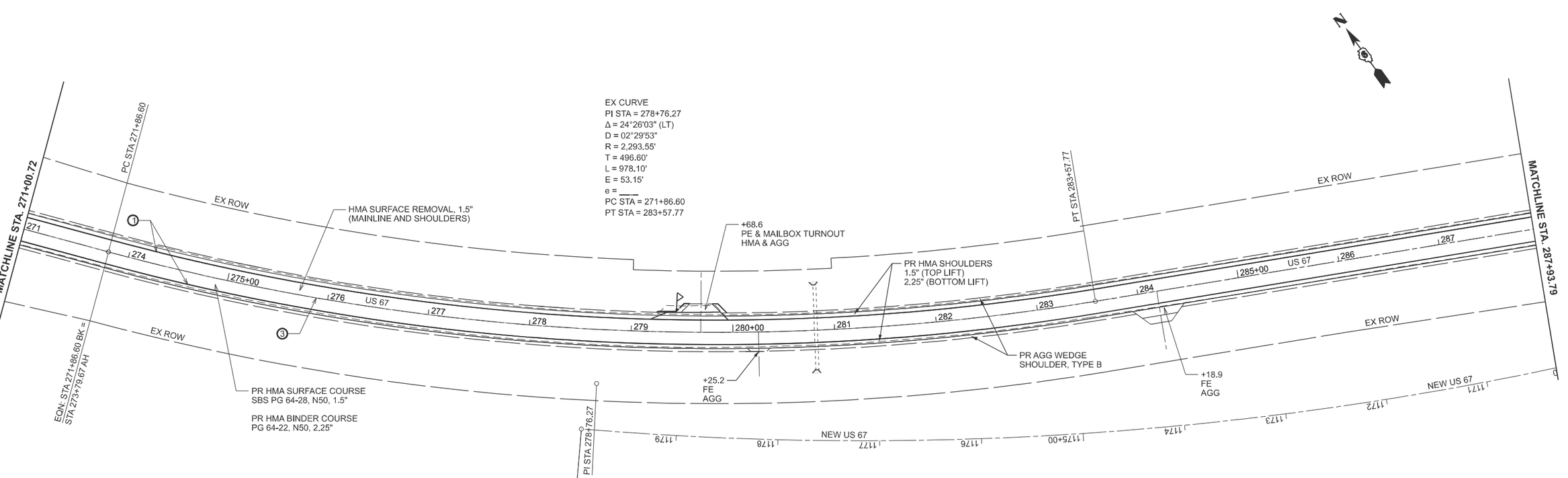

MODEL: ExCL18 - Plan 19 [Sheet]
FILE NAME: c:\pw_work\pwidot\carl.johnson@illinois.gov\d0858455\D672263-Design Final.dgn

USER NAME = carl.johnson	DESIGNED -	REVISED -	
	DRAWN -	REVISED -	
	CHECKED -	REVISED -	
PLOT DATE = 4/3/2025	DATE -	REVISED -	

STATE OF ILLINOIS
DEPARTMENT OF TRANSPORTATION

US 67 PLAN SHEETS

SCALE: 1"=50' | SHEET 11 OF 14 SHEETS | STA. 256+00.72 R3 TO STA. 287+93.79 R4

F.A.P RTE.	SECTION	COUNTY	TOTAL SHEETS	SHEET NO.
*	(1115BDR, 116SR)RS-5, 124RS-8	MORGAN	69	44

CONTRACT NO. 72263

ILLINOIS | FED. AID PROJECT

*US 67 / IL 100 / IL 104

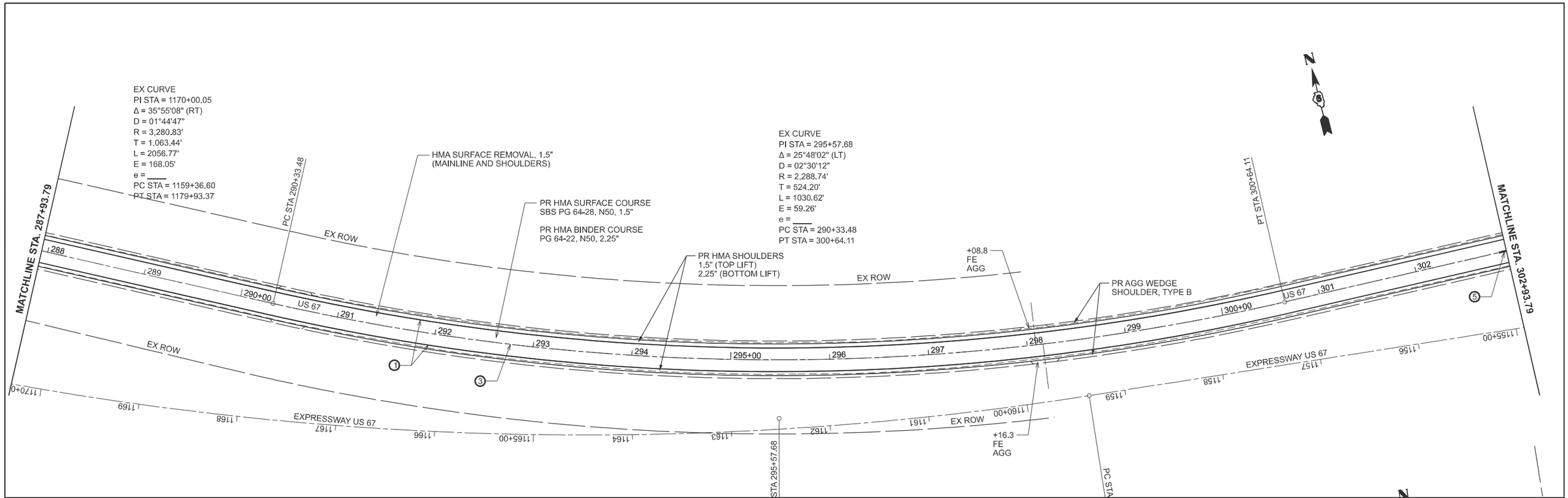

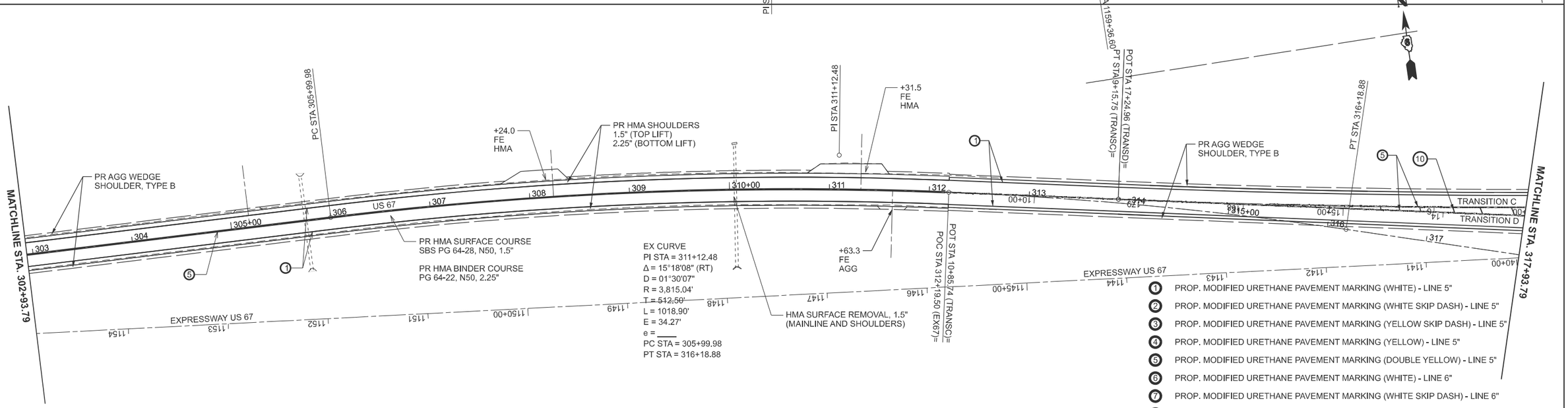

1. PROP. MODIFIED URETHANE PAVEMENT MARKING (WHITE) - LINE 5"
2. PROP. MODIFIED URETHANE PAVEMENT MARKING (WHITE SKIP DASH) - LINE 5"
3. PROP. MODIFIED URETHANE PAVEMENT MARKING (YELLOW SKIP DASH) - LINE 5"
4. PROP. MODIFIED URETHANE PAVEMENT MARKING (YELLOW) - LINE 5"
5. PROP. MODIFIED URETHANE PAVEMENT MARKING (DOUBLE YELLOW) - LINE 5"
6. PROP. MODIFIED URETHANE PAVEMENT MARKING (WHITE) - LINE 6"
7. PROP. MODIFIED URETHANE PAVEMENT MARKING (WHITE SKIP DASH) - LINE 6"
8. PROP. MODIFIED URETHANE PAVEMENT MARKING (WHITE) - LINE 8"
9. PROP. MODIFIED URETHANE PAVEMENT MARKING (WHITE) - LINE 12"
10. PROP. MODIFIED URETHANE PAVEMENT MARKING (YELLOW) - LINE 12"
11. PROP. MODIFIED URETHANE PAVEMENT MARKING (WHITE) - LINE 24
12. PROP. MODIFIED URETHANE PAVEMENT MARKING (WHITE) - LETTERS & SYMBOLS

MODEL: EXCL18 - Plan 21 [Sheet]
FILE NAME: c:\pw_work\pwidot\carl.johnson@illinois.gov\d085845\D672263-Design Final.dgn

USER NAME = carl.johnson	DESIGNED -	REVISED -	
	DRAWN -	REVISED -	
	CHECKED -	REVISED -	
PLOT DATE = 4/3/2025	DATE -	REVISED -	

STATE OF ILLINOIS
DEPARTMENT OF TRANSPORTATION

US 67 PLAN SHEETS

SCALE: 1"=50' | SHEET 12 OF 14 SHEETS | STA. | TO STA.

F.A.P RTE.	SECTION	COUNTY	TOTAL SHEETS	SHEET NO.
*	(1115BDR, 116SR)RS-5, 124RS-8	MORGAN	69	45
		CONTRACT NO. 72263		
	ILLINOIS	FED. AID PROJECT		

*US 67 / IL 100 / IL 104

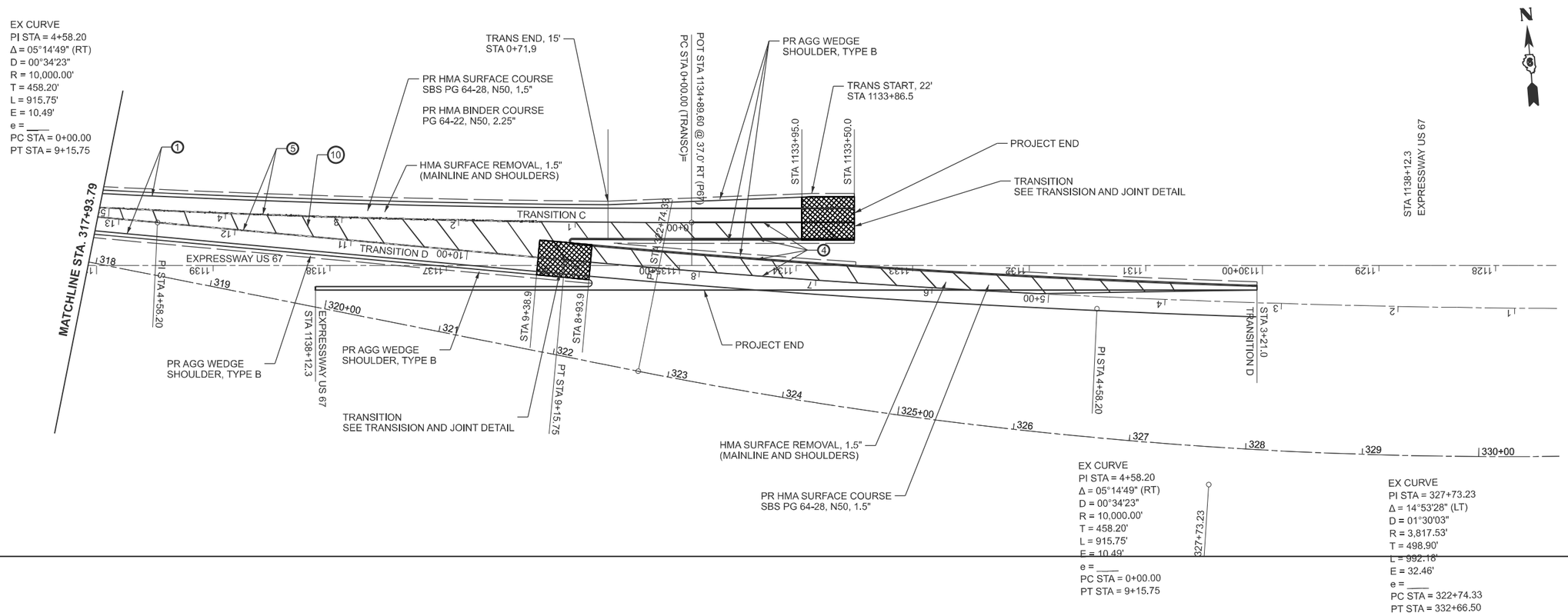

1. PROP. MODIFIED URETHANE PAVEMENT MARKING (WHITE) - LINE 5"
2. PROP. MODIFIED URETHANE PAVEMENT MARKING (WHITE SKIP DASH) - LINE 5"
3. PROP. MODIFIED URETHANE PAVEMENT MARKING (YELLOW SKIP DASH) - LINE 5"
4. PROP. MODIFIED URETHANE PAVEMENT MARKING (YELLOW) - LINE 5"
5. PROP. MODIFIED URETHANE PAVEMENT MARKING (DOUBLE YELLOW) - LINE 5"
6. PROP. MODIFIED URETHANE PAVEMENT MARKING (WHITE) - LINE 6"
7. PROP. MODIFIED URETHANE PAVEMENT MARKING (WHITE SKIP DASH) - LINE 6"
8. PROP. MODIFIED URETHANE PAVEMENT MARKING (WHITE) - LINE 8"
9. PROP. MODIFIED URETHANE PAVEMENT MARKING (WHITE) - LINE 12"
10. PROP. MODIFIED URETHANE PAVEMENT MARKING (YELLOW) - LINE 12"
11. PROP. MODIFIED URETHANE PAVEMENT MARKING (WHITE) - LINE 24
12. PROP. MODIFIED URETHANE PAVEMENT MARKING (WHITE) - LETTERS & SYMBOLS

MODEL: P67 - Plan 24 [Sheet]
FILE NAME: c:\pw_work\pwidot\carl.johnson@illinois.gov\d0858455\D672263-Design Final.dgn

USER NAME = carl.johnson	DESIGNED -	REVISED -	
	DRAWN -	REVISED -	
	CHECKED -	REVISED -	
PLOT DATE = 4/3/2025	DATE -	REVISED -	

STATE OF ILLINOIS
DEPARTMENT OF TRANSPORTATION

US 67 PLAN SHEETS

SCALE: 1"=50' | SHEET 13 OF 14 SHEETS | STA. 1125+90.33 | TO STA. 1140+90.33

F.A.P RTE.	SECTION	COUNTY	TOTAL SHEETS	SHEET NO.
*	(1115BDR, 116SR)RS-5, 124RS-8	MORGAN	69	46

CONTRACT NO. 72263

ILLINOIS | FED. AID PROJECT

*US 67 / IL 100 / IL 104

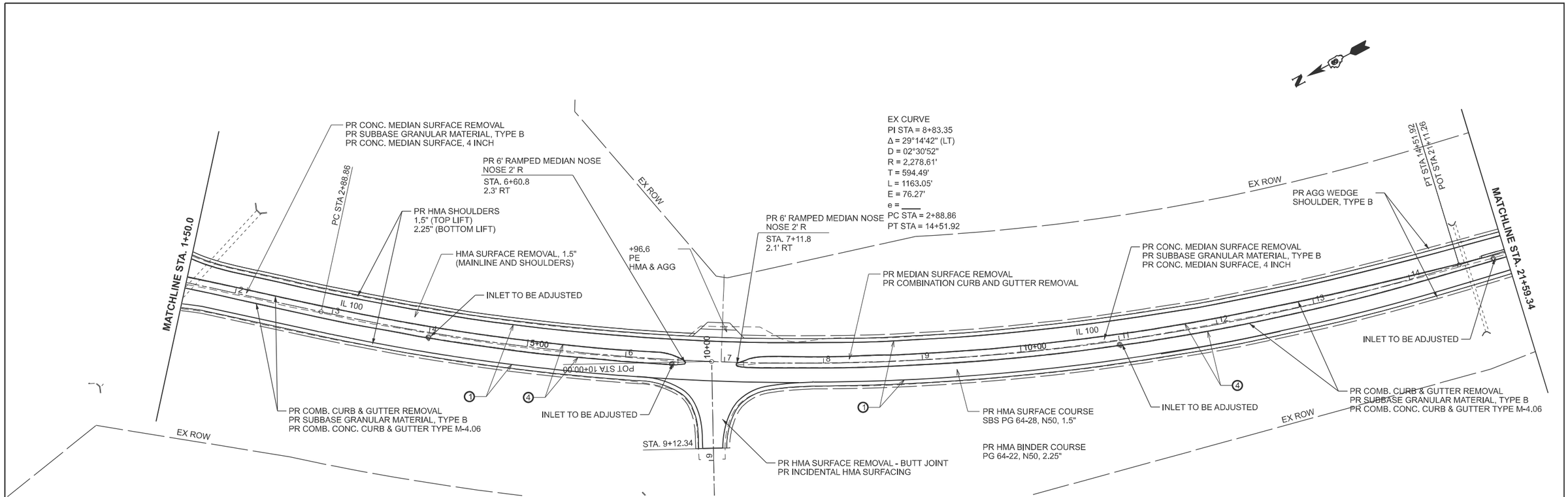

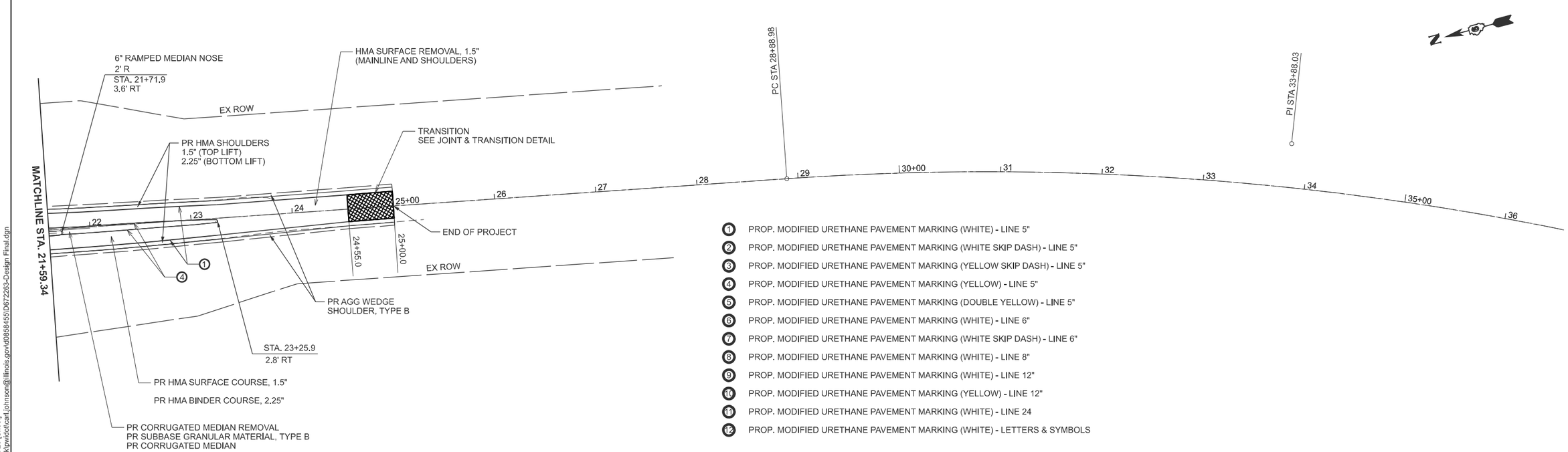

1. PROP. MODIFIED URETHANE PAVEMENT MARKING (WHITE) - LINE 5"
2. PROP. MODIFIED URETHANE PAVEMENT MARKING (WHITE SKIP DASH) - LINE 5"
3. PROP. MODIFIED URETHANE PAVEMENT MARKING (YELLOW SKIP DASH) - LINE 5"
4. PROP. MODIFIED URETHANE PAVEMENT MARKING (YELLOW) - LINE 5"
5. PROP. MODIFIED URETHANE PAVEMENT MARKING (DOUBLE YELLOW) - LINE 5"
6. PROP. MODIFIED URETHANE PAVEMENT MARKING (WHITE) - LINE 6"
7. PROP. MODIFIED URETHANE PAVEMENT MARKING (WHITE SKIP DASH) - LINE 6"
8. PROP. MODIFIED URETHANE PAVEMENT MARKING (WHITE) - LINE 8"
9. PROP. MODIFIED URETHANE PAVEMENT MARKING (WHITE) - LINE 12"
10. PROP. MODIFIED URETHANE PAVEMENT MARKING (YELLOW) - LINE 12"
11. PROP. MODIFIED URETHANE PAVEMENT MARKING (WHITE) - LINE 24
12. PROP. MODIFIED URETHANE PAVEMENT MARKING (WHITE) - LETTERS & SYMBOLS

MODEL: ExCL18 - Plan 25 [Sheet]
FILE NAME: c:\pw_work\pwidot\carl.johnson@illinois.gov\d0858455\D672263-Design Final.dgn

USER NAME = carl.johnson	DESIGNED -	REVISED -	
	DRAWN -	REVISED -	
	CHECKED -	REVISED -	
PLOT DATE = 4/3/2025	DATE -	REVISED -	

STATE OF ILLINOIS
DEPARTMENT OF TRANSPORTATION

IL 100 PLAN SHEETS

SCALE: 1"=50' | SHEET 14 OF 14 SHEETS | STA. 0+00.00 TO STA. 36+59.34 R2

F.A.P RTE.	SECTION	COUNTY	TOTAL SHEETS	SHEET NO.
*	(1115BDR, 116SR)RS-5, 124RS-8	MORGAN	69	47

CONTRACT NO. 72263

ILLINOIS | FED. AID PROJECT

*US 67 / IL 100 / IL 104

STAGE ONE TRAFFIC CONTROL

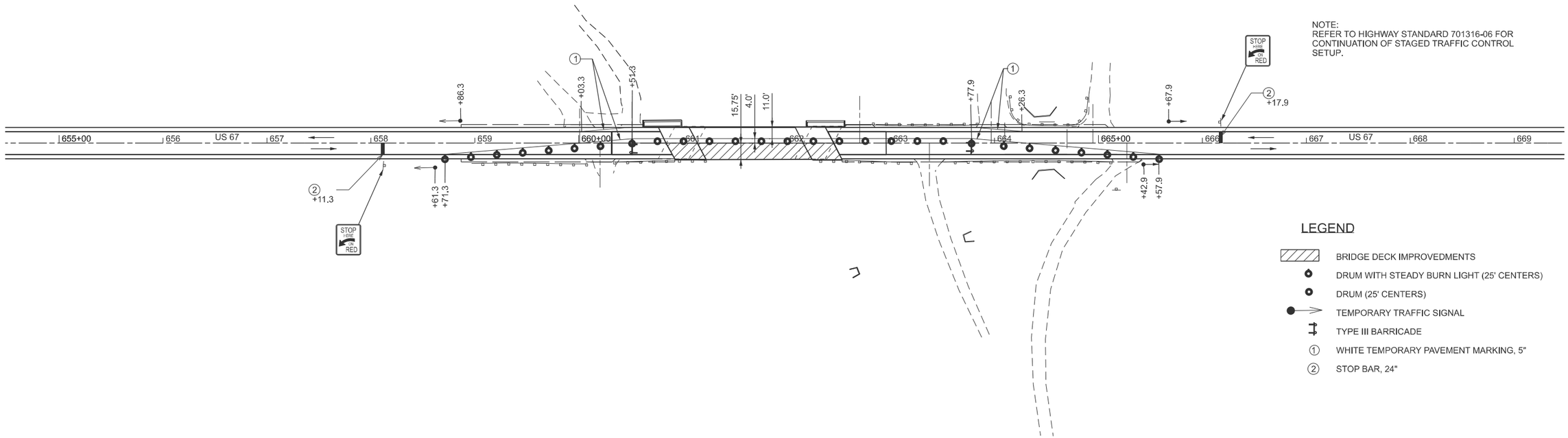

NOTE:
REFER TO HIGHWAY STANDARD 701316-06 FOR CONTINUATION OF STAGED TRAFFIC CONTROL SETUP.

LEGEND

- BRIDGE DECK IMPROVEDMENTS
- DRUM WITH STEADY BURN LIGHT (25' CENTERS)
- DRUM (25' CENTERS)
- TEMPORARY TRAFFIC SIGNAL
- TYPE III BARRICADE
- (1) WHITE TEMPORARY PAVEMENT MARKING, 5"
- (2) STOP BAR, 24"

LOOKING NORTH

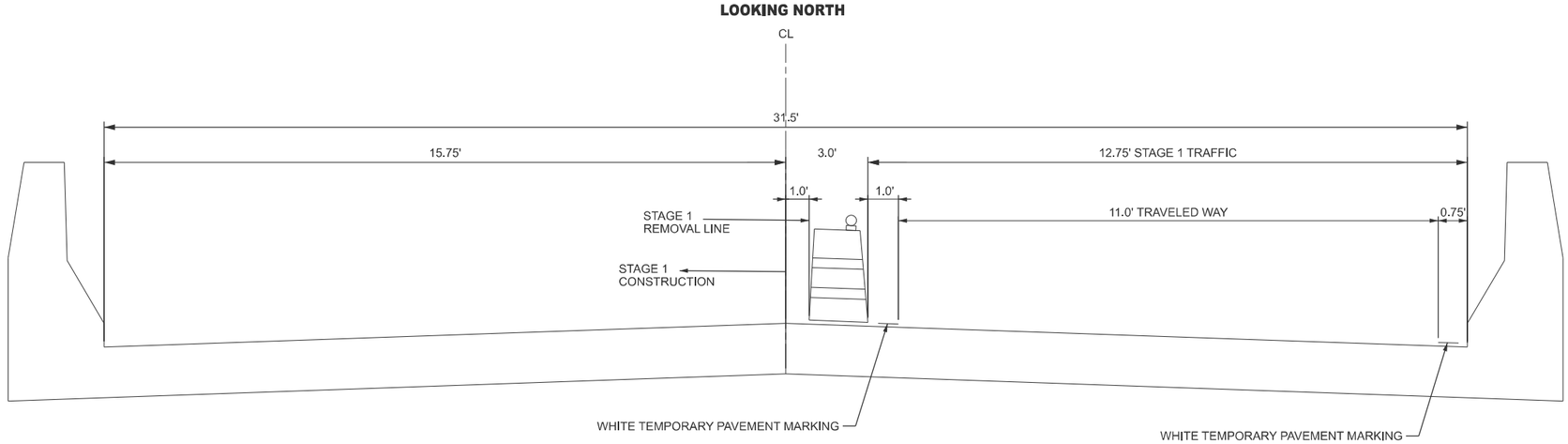

MODEL: Staging Construction - Staging Construction [Sheet]
FILE NAME: c:\pw_work\pwidot\carl.johnson@illinois.gov\d0858453\D672263 Sht - South Bound Staged Construction.dgn

USER NAME = carl.johnson	DESIGNED -	REVISED -	
	DRAWN -	REVISED -	
	CHECKED -	REVISED -	
PLOT DATE = 4/3/2025	DATE -	REVISED -	

STATE OF ILLINOIS
DEPARTMENT OF TRANSPORTATION

TRAFFIC CONTROL PLAN - STAGE I
(WILLOW CREEK)

SCALE:1"=50' | SHEET A001 OF 2 SHEETS | STA. 654+48.21 TO STA. 669+48.21

F.A.P RTE.	SECTION	COUNTY	TOTAL SHEETS	SHEET NO.
*	(1115BDR, 116SR)RS-5, 124RS-8	MORGAN	69	48
		CONTRACT NO. 72263		
	ILLINOIS	FED. AID PROJECT		

*US 67 / IL 100 / IL 104

STAGE TWO TRAFFIC CONTROL

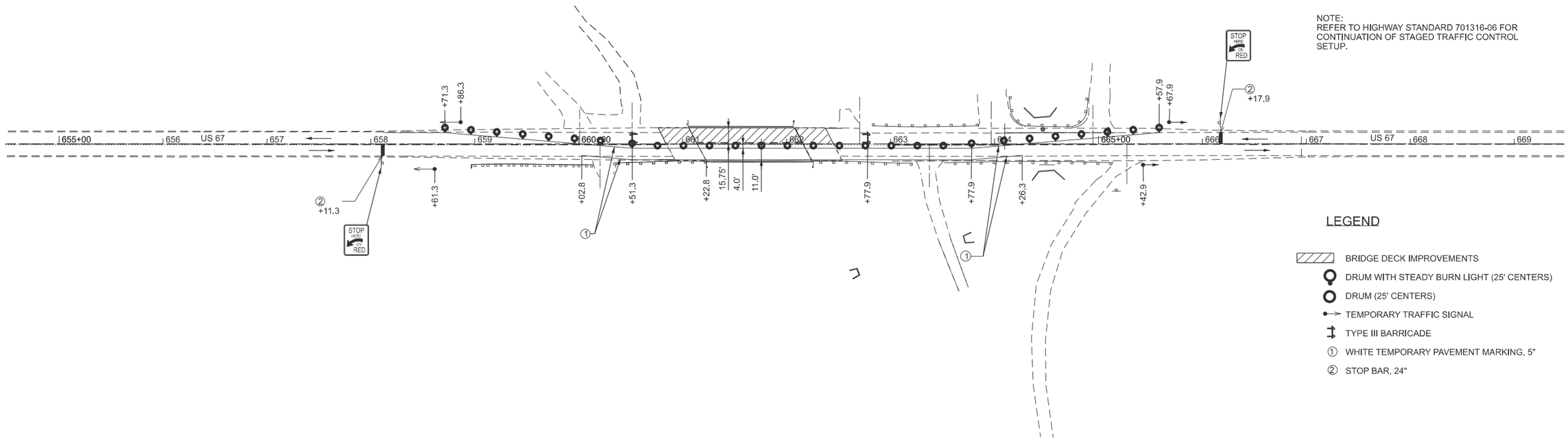

NOTE:
REFER TO HIGHWAY STANDARD 701316-06 FOR CONTINUATION OF STAGED TRAFFIC CONTROL SETUP.

LEGEND

- BRIDGE DECK IMPROVEMENTS
- DRUM WITH STEADY BURN LIGHT (25' CENTERS)
- DRUM (25' CENTERS)
- TEMPORARY TRAFFIC SIGNAL
- TYPE III BARRICADE
- ① WHITE TEMPORARY PAVEMENT MARKING, 5"
- ② STOP BAR, 24"

LOOKING NORTH

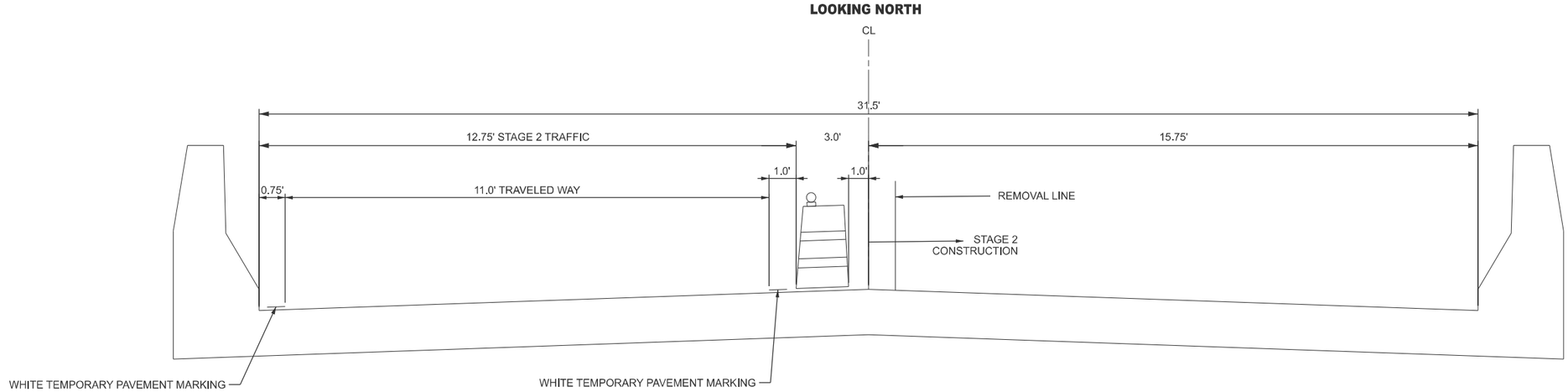

MODEL: Staging Construction - Staging Construction [Sheet]
FILE NAME: c:\pw_work\pwidot\carl.johnson@illinois.gov\d0858453\D672263 Sht - North Bound Staged Construction.dgn

USER NAME = carl.johnson	DESIGNED -	REVISED -	
	DRAWN -	REVISED -	
	CHECKED -	REVISED -	
PLOT DATE = 4/3/2025	DATE -	REVISED -	

STATE OF ILLINOIS
DEPARTMENT OF TRANSPORTATION

TRAFFIC CONTROL PLAN - STAGE II
(WILLOW CREEK)

SCALE:1"=50' | SHEET A002 OF 2 SHEETS | STA. 654+48.21 TO STA. 669+48.21

F.A.P RTE.	SECTION	COUNTY	TOTAL SHEETS	SHEET NO.
*	(1115BDR, 116SR)RS-5, 124RS-8	MORGAN	69	49

CONTRACT NO. 72263

ILLINOIS | FED. AID PROJECT

*US 67 / IL 100 / IL 104

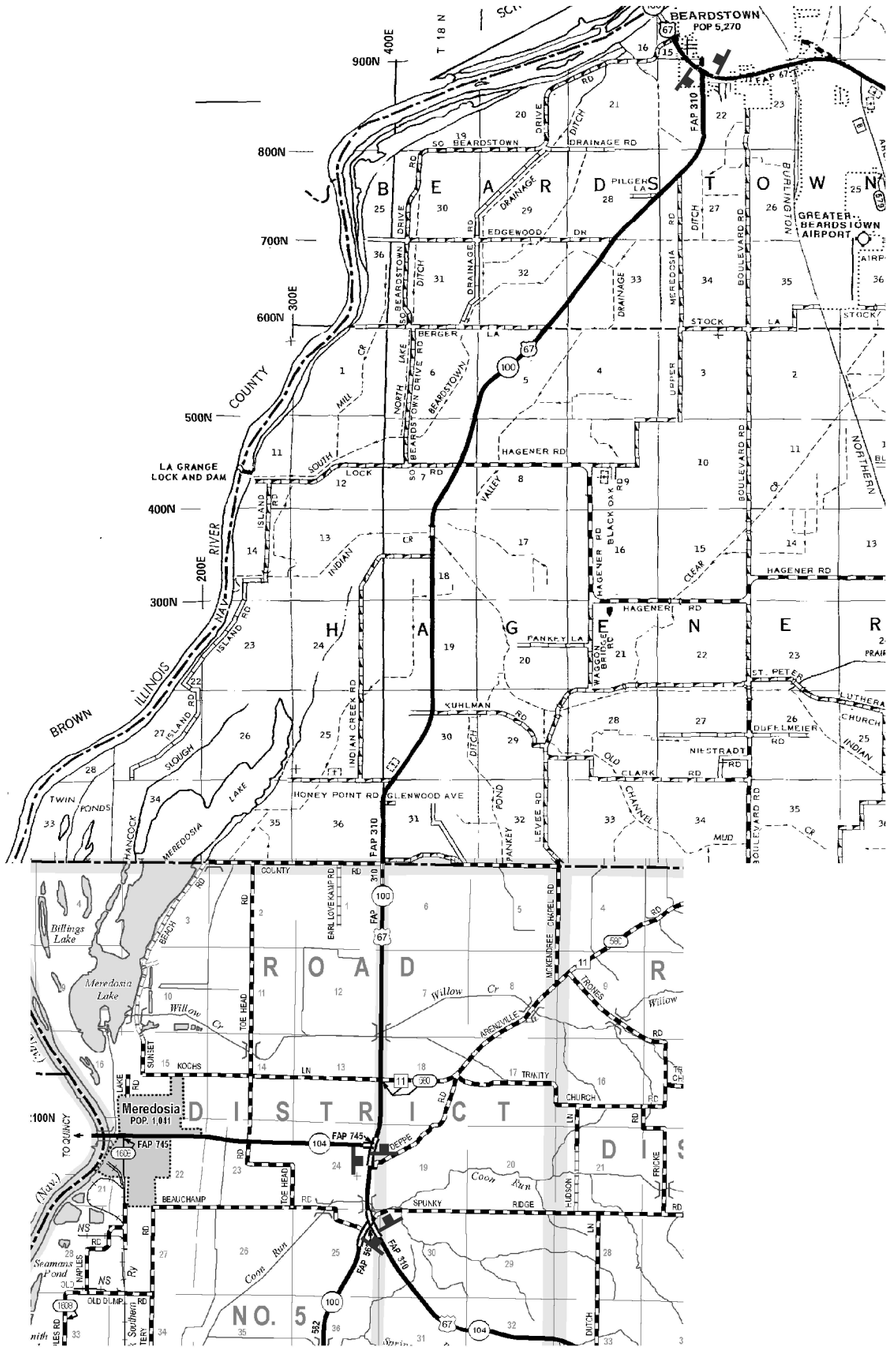

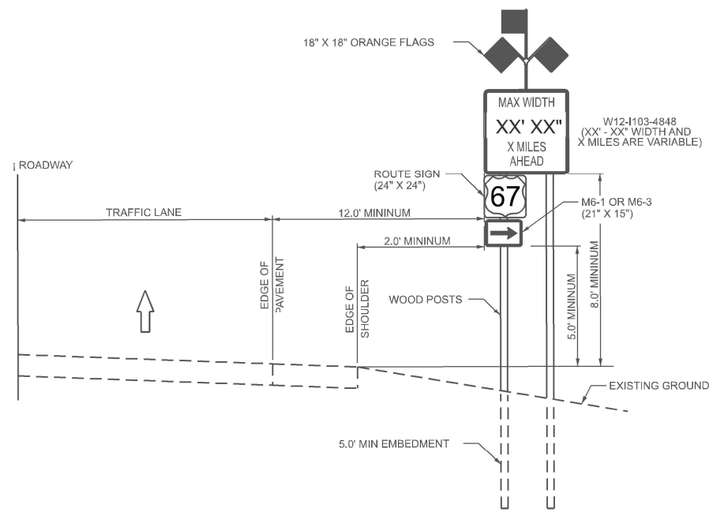

WIDTH RESTRICTION SIGN
CONVENTIONAL ROADWAYS

WIDTH RESTRICTION SIGN LOCATIONS

MODEL: Width Restriction Signage-1 [Sheet]
FILE NAME: c:\pw_work\pwidot\carl.johnson@illinois.gov\d0858453\D672263 Sht - Details.dgn

USER NAME = carl.johnson	DESIGNED -	REVISED -	
	DRAWN -	REVISED -	
	CHECKED -	REVISED -	
PLOT DATE = 4/3/2025	DATE -	REVISED -	

STATE OF ILLINOIS
DEPARTMENT OF TRANSPORTATION

WIDTH RESTRICTION SIGNAGE DETAIL

SCALE: | SHEET A001 OF 17 SHEETS | STA. | TO STA.

F.A.P RTE.	SECTION	COUNTY	TOTAL SHEETS	SHEET NO.
*	(1115BDR, 116SR)RS-5, 124RS-8	MORGAN	69	50
		CONTRACT NO. 72263		
	ILLINOIS	FED. AID PROJECT		

*US 67 / IL 100 / IL 104

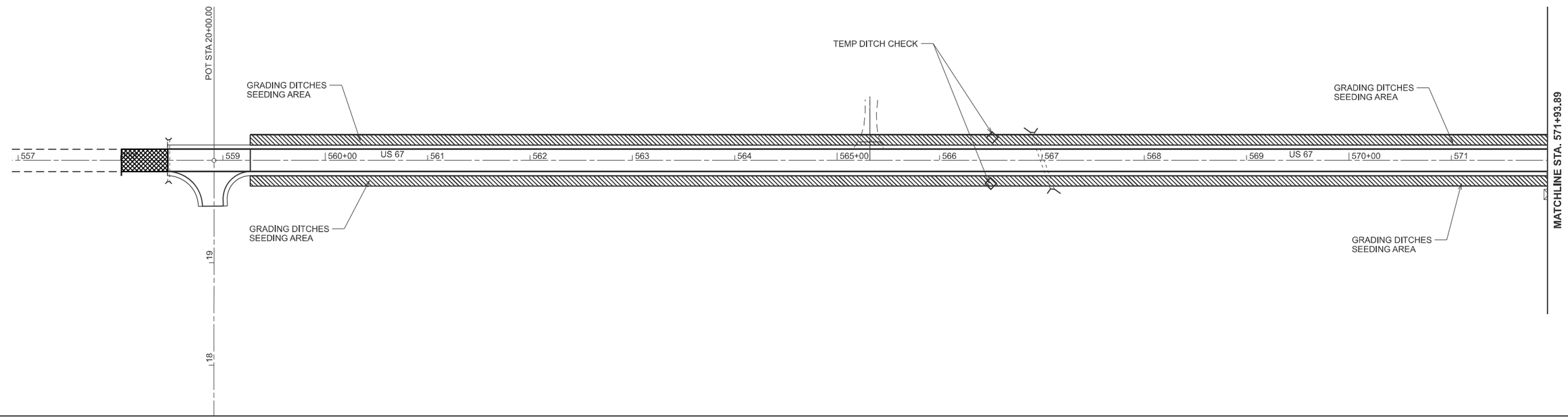

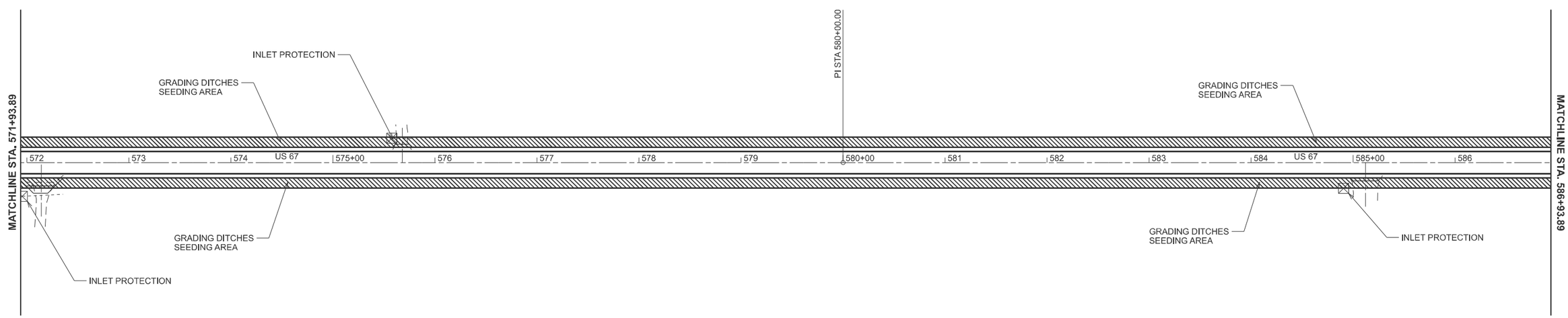

MODEL: Erosion Control - Erosion Control [Sheet]
FILE NAME: c:\pw_work\pwidot\carl.johnson@illinois.gov\d0858453\D672263 Sht - Erosion Control.dgn

USER NAME = carl.johnson	DESIGNED -	REVISED -	
	DRAWN -	REVISED -	
	CHECKED -	REVISED -	
PLOT DATE = 4/3/2025	DATE -	REVISED -	

STATE OF ILLINOIS
DEPARTMENT OF TRANSPORTATION

EROSION CONTROL PLAN SHEETS

SCALE: 1"=50' | SHEET A001 OF 6 SHEETS | STA. 556+93.89 TO STA. 586+93.89

F.A.P RTE.	SECTION	COUNTY	TOTAL SHEETS	SHEET NO.
*	(1115BDR, 116SR)RS-5, 124RS-8	MORGAN	69	51
		CONTRACT NO. 72263		
		ILLINOIS	FED. AID PROJECT	

*US 67 / IL 100 / IL 104

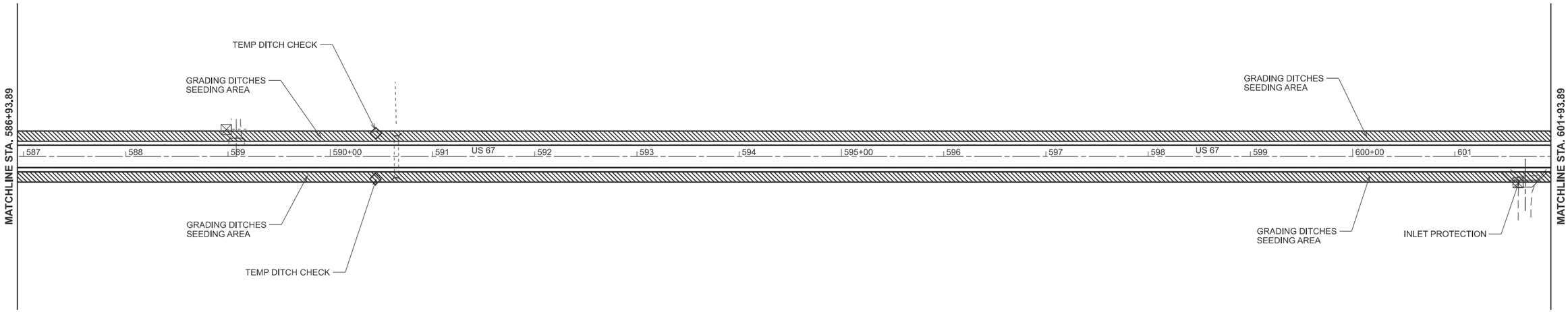

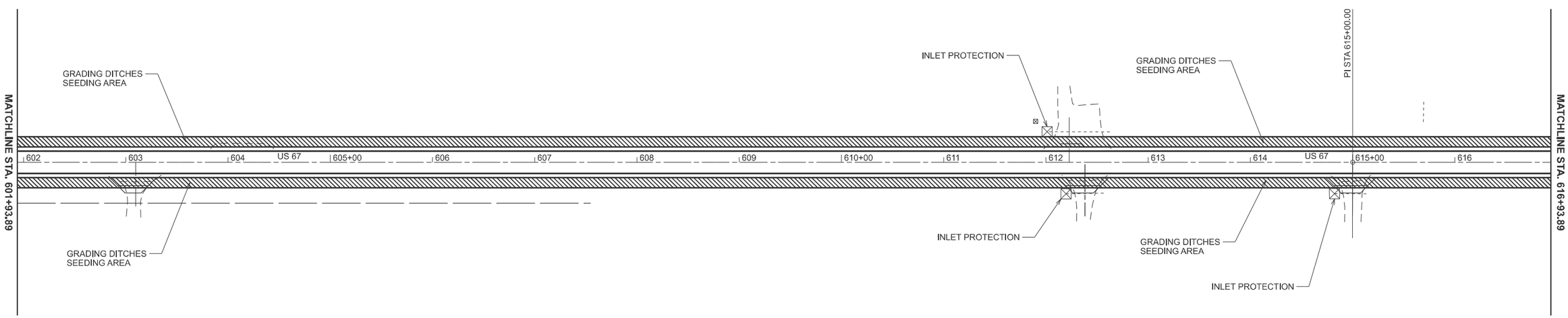

MODEL: Erosion Control - Erosion Control-2 [Sheet]
FILE NAME: c:\pw_work\pwidot\carl.johnson@illinois.gov\d0858453\D672263 Sht - Erosion Control.dgn

USER NAME = carl.johnson	DESIGNED -	REVISED -	
	DRAWN -	REVISED -	
	CHECKED -	REVISED -	
PLOT DATE = 4/3/2025	DATE -	REVISED -	

STATE OF ILLINOIS
DEPARTMENT OF TRANSPORTATION

EROSION CONTROL PLAN SHEETS

SCALE: 1"=50' | SHEET A002 OF 6 SHEETS | STA. 586+93.89 TO STA. 616+93.89

F.A.P RTE.	SECTION	COUNTY	TOTAL SHEETS	SHEET NO.
*	(1115BDR, 116SR)RS-5, 124RS-8	MORGAN	69	52
		CONTRACT NO. 72263		
		ILLINOIS	FED. AID PROJECT	

*US 67 / IL 100 / IL 104

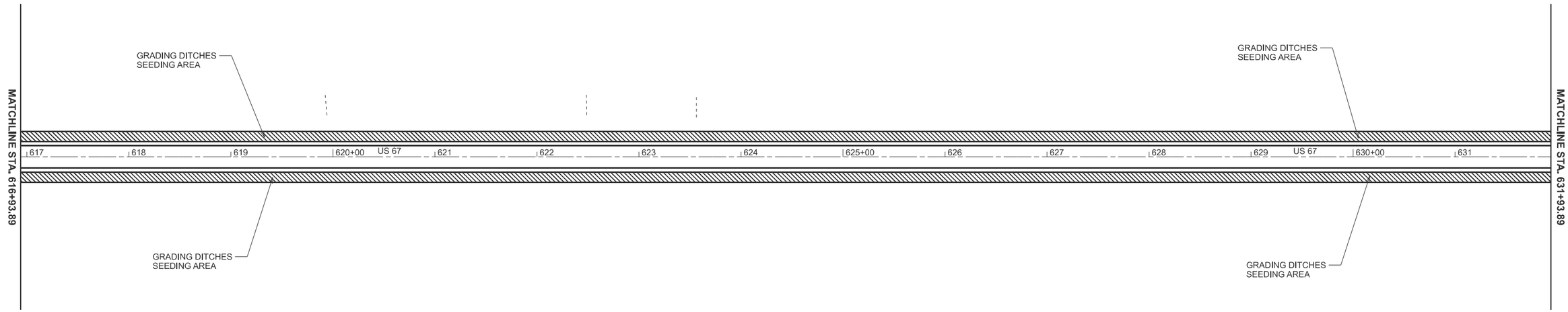

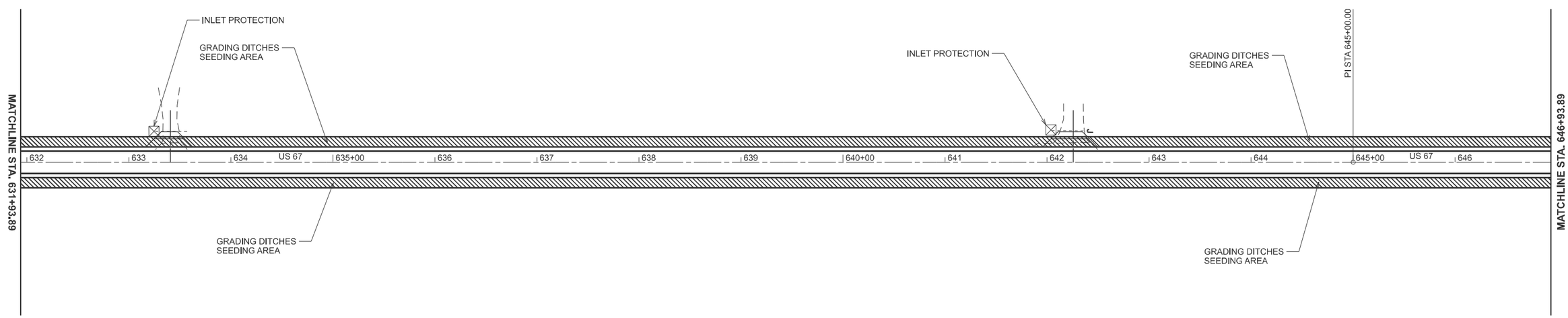

MODEL: Erosion Control - Erosion Control-4 [Sheet]
FILE NAME: c:\pw_work\pwidot\carl.johnson@illinois.gov\d0858453\D672263 Sht - Erosion Control.dgn

USER NAME = carl.johnson	DESIGNED -	REVISED -	
	DRAWN -	REVISED -	
	CHECKED -	REVISED -	
PLOT DATE = 4/3/2025	DATE -	REVISED -	

STATE OF ILLINOIS
DEPARTMENT OF TRANSPORTATION

EROSION CONTROL PLAN SHEETS

SCALE: 1"=50' | SHEET A003 OF 6 SHEETS | STA. 616+93.89 TO STA. 646+93.89

F.A.P RTE.	SECTION	COUNTY	TOTAL SHEETS	SHEET NO.
*	(1115BDR, 116SR)RS-5, 124RS-8	MORGAN	69	53
		CONTRACT NO. 72263		
		ILLINOIS	FED. AID PROJECT	

*US 67 / IL 100 / IL 104

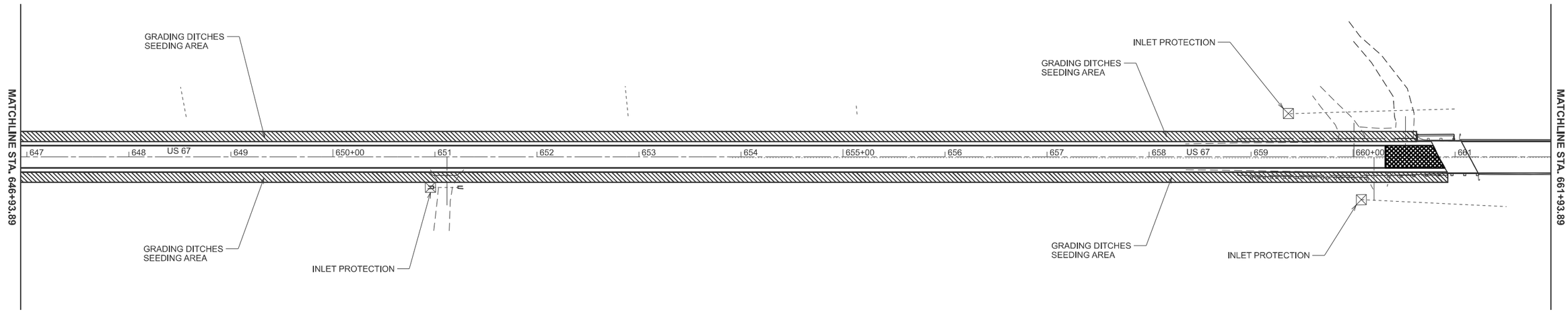

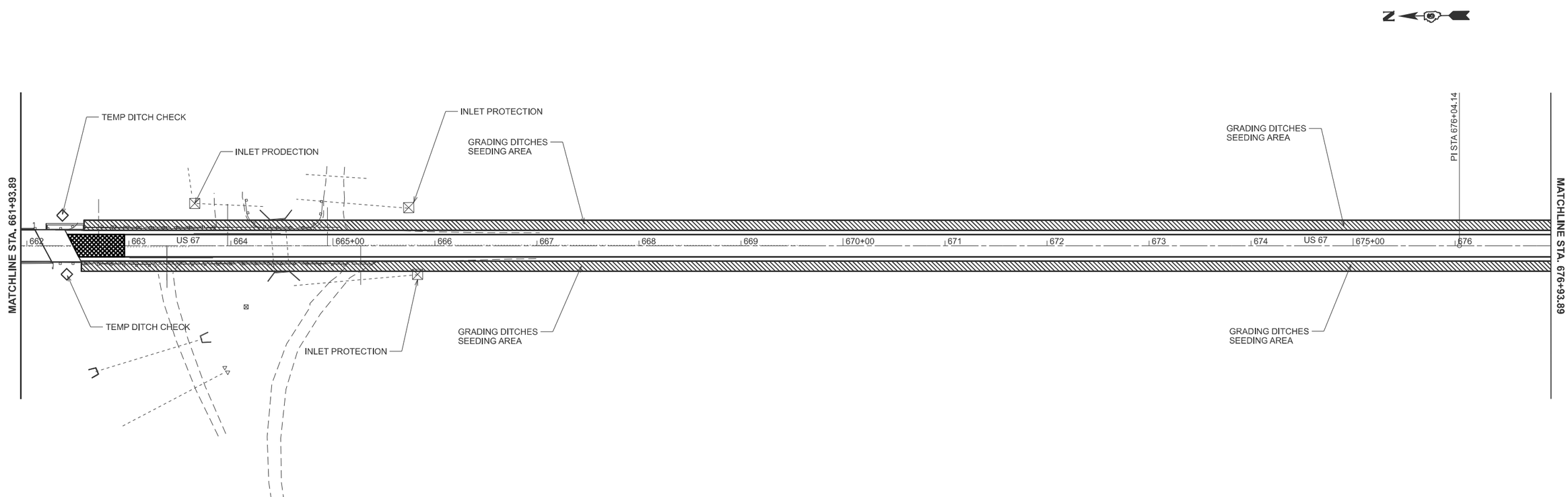

MODEL: Erosion Control - Erosion Control-6 [Sheet]
FILE NAME: c:\pw_work\pwidot\carl.johnson@illinois.gov\d0858453\D672263 Sht - Erosion Control.dgn

USER NAME = carl.johnson	DESIGNED -	REVISED -	
	DRAWN -	REVISED -	
	CHECKED -	REVISED -	
PLOT DATE = 4/3/2025	DATE -	REVISED -	

STATE OF ILLINOIS
DEPARTMENT OF TRANSPORTATION

EROSION CONTROL PLAN SHEETS

SCALE: 1"=50' | SHEET A004 OF 6 SHEETS | STA. 646+93.89 TO STA. 676+93.89

F.A.P RTE.	SECTION	COUNTY	TOTAL SHEETS	SHEET NO.
*	(1115BDR, 116SR)RS-5, 124RS-8	MORGAN	69	54
		CONTRACT NO. 72263		
		ILLINOIS FED. AID PROJECT		

*US 67 / IL 100 / IL 104

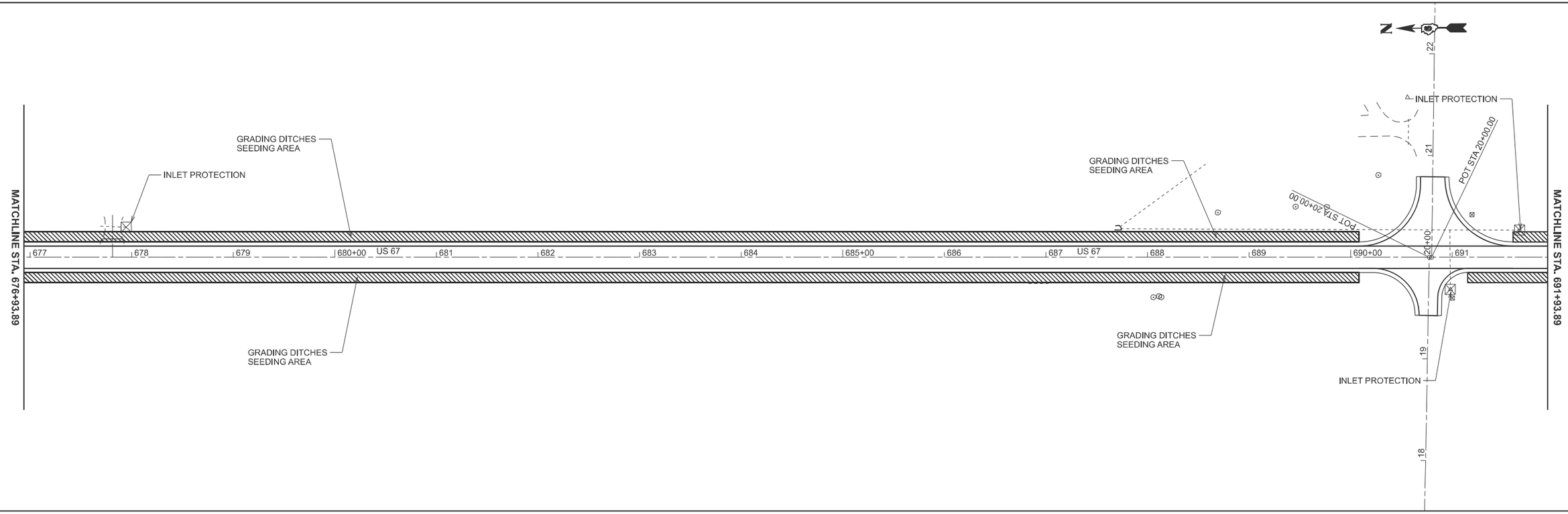

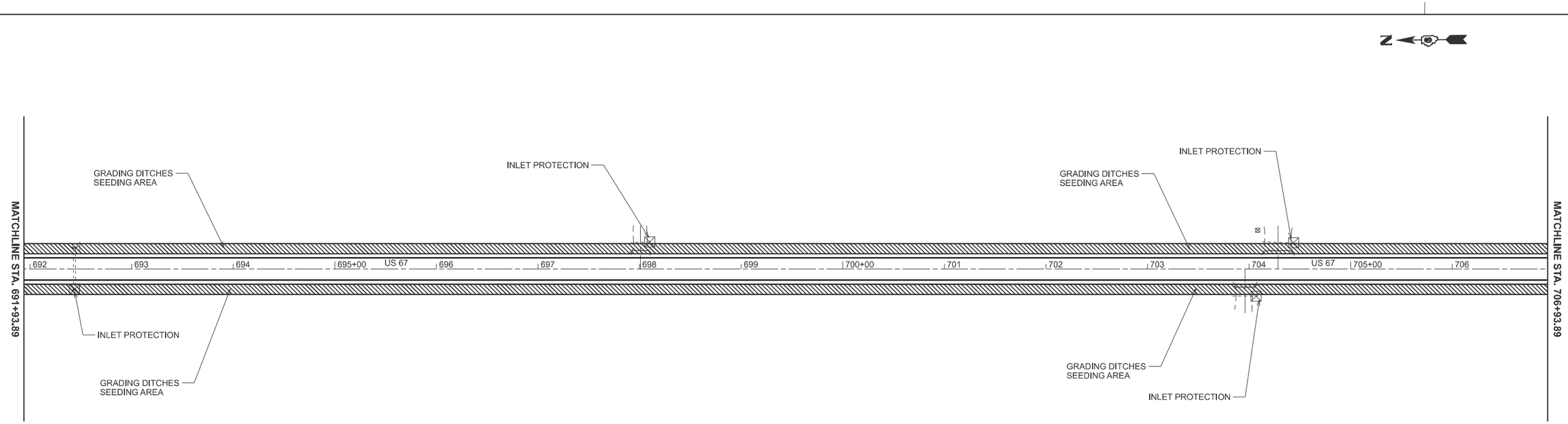

MODEL: Erosion Control - Erosion Control-8 [Sheet]
FILE NAME: c:\pw_work\pwidot\carl.johnson@illinois.gov\d0858453\D672263 Sht - Erosion Control.dgn

USER NAME = carl.johnson	DESIGNED -	REVISED -	
	DRAWN -	REVISED -	
	CHECKED -	REVISED -	
PLOT DATE = 4/3/2025	DATE -	REVISED -	

STATE OF ILLINOIS
DEPARTMENT OF TRANSPORTATION

EROSION CONTROL PLAN SHEETS

SCALE: 1"=50' | SHEET A005 OF 6 SHEETS | STA. 676+93.89 TO STA. 706+93.89

F.A.P RTE.	SECTION	COUNTY	TOTAL SHEETS	SHEET NO.
*	(1115BDR, 116SR)RS-5, 124RS-8	MORGAN	69	55
		CONTRACT NO. 72263		
		ILLINOIS FED. AID PROJECT		

*US 67 / IL 100 / IL 104

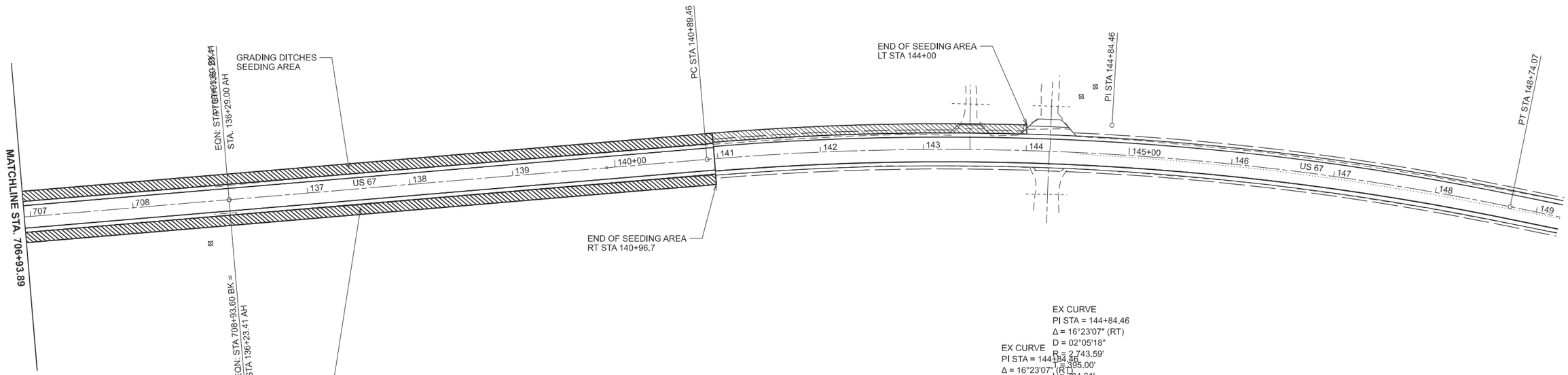

EX CURVE
PI STA = 144+84.46
Δ = 16°23'07" (RT)
D = 02°05'18"
R = 2,743.59'
T = 395.00'
L = 784.61'
E = 28.29'
e = ____
PC STA = 140+89.46

EX CURVE
PI STA = 144+84.46
Δ = 16°23'07" (RT)
D = 02°05'18"
R = 2,743.59'
T = 395.00'

MODEL: Erosion Control - Erosion Control-10 [Sheet]
FILE NAME: c:\pw_work\pwidot\carl.johnson@illinois.gov\d0858453\D672263 Sht - Erosion Control.dgn

USER NAME = carl.johnson	DESIGNED -	REVISED -	STATE OF ILLINOIS DEPARTMENT OF TRANSPORTATION
	DRAWN -	REVISED -	
	CHECKED -	REVISED -	
PLOT DATE = 4/3/2025	DATE -	REVISED -	

EROSION CONTROL PLAN SHEETS

SCALE: 1"=50' | SHEET A006 OF 6 SHEETS | STA. 706+93.89 TO STA. 149+23.71 R2

F.A.P RTE.	SECTION	COUNTY	TOTAL SHEETS	SHEET NO.
*	(1115BDR, 116SR)RS-5, 124RS-8	MORGAN	69	56
		CONTRACT NO. 72263		
	ILLINOIS	FED. AID PROJECT		

*US 67 / IL 100 / IL 104

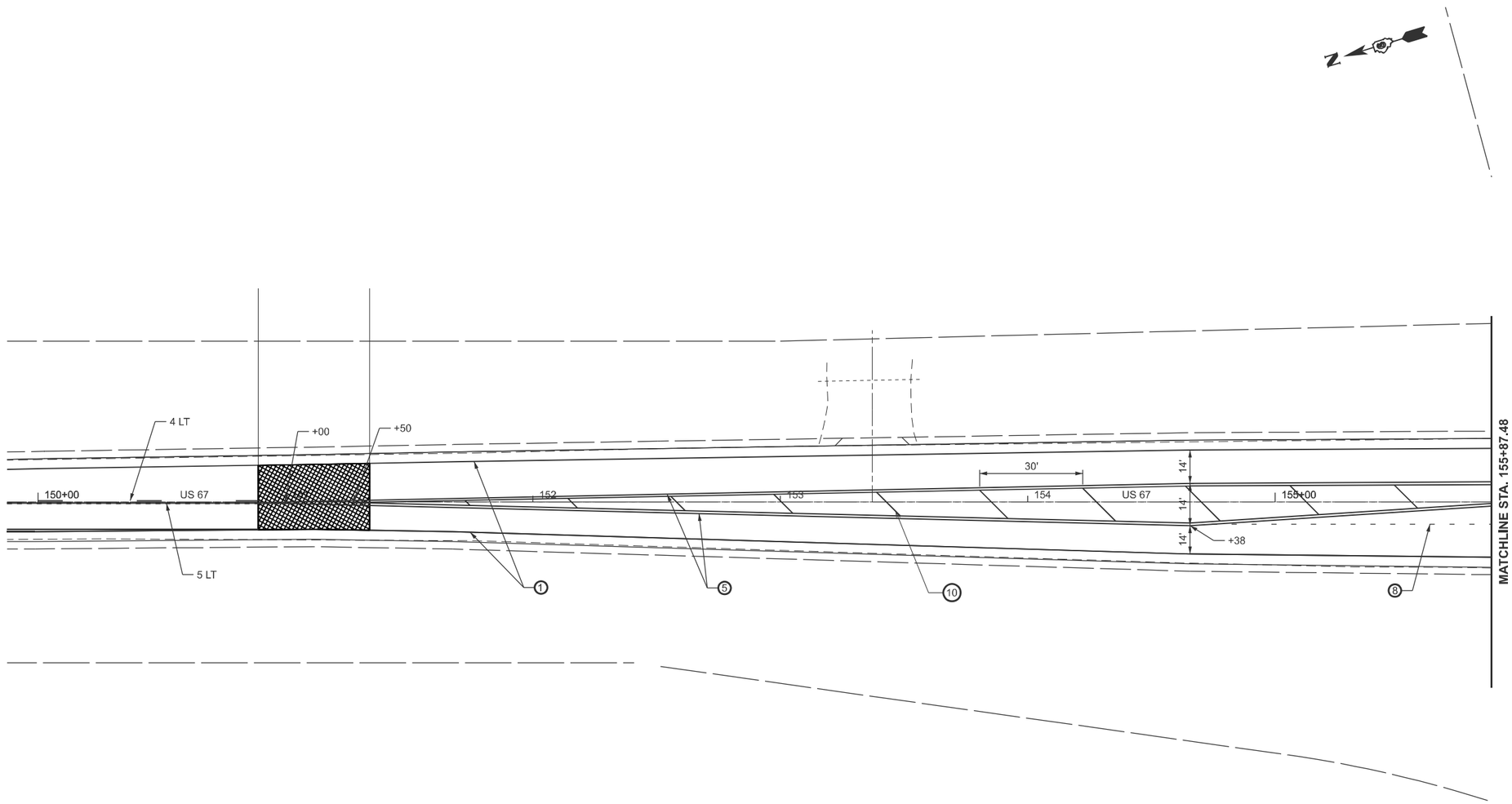

1. PROP. MODIFIED URETHANE PAVEMENT MARKING (WHITE) - LINE 5"
2. PROP. MODIFIED URETHANE PAVEMENT MARKING (WHITE SKIP DASH) - LINE 5"
3. PROP. MODIFIED URETHANE PAVEMENT MARKING (YELLOW SKIP DASH) - LINE 5"
4. PROP. MODIFIED URETHANE PAVEMENT MARKING (YELLOW) - LINE 5"
5. PROP. MODIFIED URETHANE PAVEMENT MARKING (DOUBLE YELLOW) - LINE 5"
6. PROP. MODIFIED URETHANE PAVEMENT MARKING (WHITE) - LINE 6"
7. PROP. MODIFIED URETHANE PAVEMENT MARKING (WHITE SKIP DASH) - LINE 6"
8. PROP. MODIFIED URETHANE PAVEMENT MARKING (WHITE) - LINE 8"
9. PROP. MODIFIED URETHANE PAVEMENT MARKING (WHITE) - LINE 12"
10. PROP. MODIFIED URETHANE PAVEMENT MARKING (YELLOW) - LINE 12"
11. PROP. MODIFIED URETHANE PAVEMENT MARKING (WHITE) - LINE 24
12. PROP. MODIFIED URETHANE PAVEMENT MARKING (WHITE) - LETTERS & SYMBOLS

MODEL: ExCL20 - Pavement Marking Detail [Sheet]
FILE NAME: c:\pw_work\pwidot\carl.johnson@illinois.gov\d085845\D672263-Design Final.dgn

USER NAME = carl.johnson	DESIGNED -	REVISED -	
	DRAWN -	REVISED -	
	CHECKED -	REVISED -	
PLOT DATE = 4/3/2025	DATE -	REVISED -	

STATE OF ILLINOIS
DEPARTMENT OF TRANSPORTATION

DETAIL SHEETS - PAVEMENT MARKINGS

SCALE: CUSTOM 1:300 | SHEET A001 OF 4 SHEETS | STA. 149+87.48 R2 TO STA. 155+87.48 R2

F.A.P RTE.	SECTION	COUNTY	TOTAL SHEETS	SHEET NO.
*	(1115BDR, 116SR)RS-5, 124RS-8	MORGAN	69	57
		CONTRACT NO. 72263		
		ILLINOIS FED. AID PROJECT		

*US 67 / IL 100 / IL 104

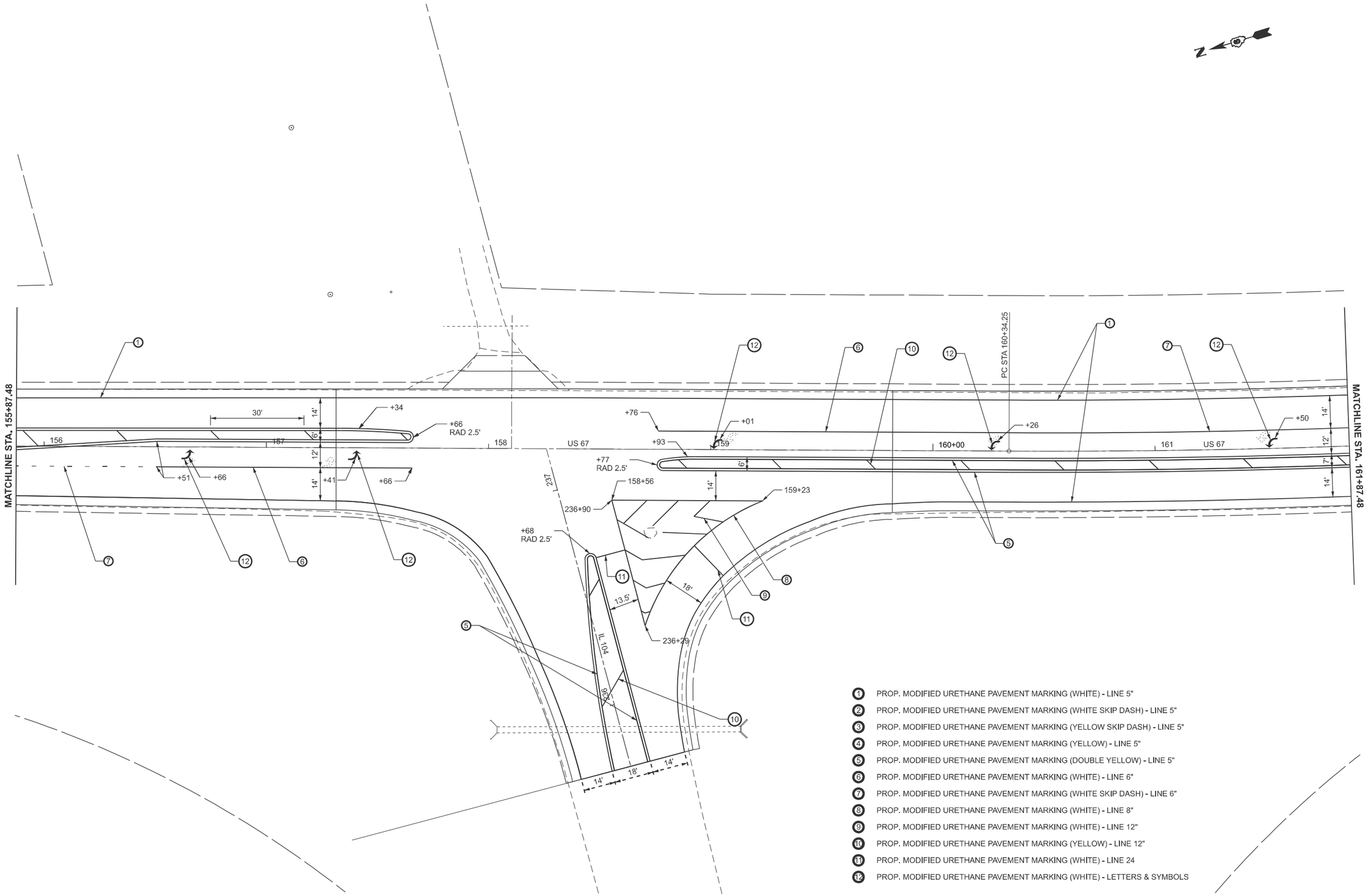

1. PROP. MODIFIED URETHANE PAVEMENT MARKING (WHITE) - LINE 5"
2. PROP. MODIFIED URETHANE PAVEMENT MARKING (WHITE SKIP DASH) - LINE 5"
3. PROP. MODIFIED URETHANE PAVEMENT MARKING (YELLOW SKIP DASH) - LINE 5"
4. PROP. MODIFIED URETHANE PAVEMENT MARKING (YELLOW) - LINE 5"
5. PROP. MODIFIED URETHANE PAVEMENT MARKING (DOUBLE YELLOW) - LINE 5"
6. PROP. MODIFIED URETHANE PAVEMENT MARKING (WHITE) - LINE 6"
7. PROP. MODIFIED URETHANE PAVEMENT MARKING (WHITE SKIP DASH) - LINE 6"
8. PROP. MODIFIED URETHANE PAVEMENT MARKING (WHITE) - LINE 8"
9. PROP. MODIFIED URETHANE PAVEMENT MARKING (WHITE) - LINE 12"
10. PROP. MODIFIED URETHANE PAVEMENT MARKING (YELLOW) - LINE 12"
11. PROP. MODIFIED URETHANE PAVEMENT MARKING (WHITE) - LINE 24
12. PROP. MODIFIED URETHANE PAVEMENT MARKING (WHITE) - LETTERS & SYMBOLS

MODEL: ExCL20 - Pavement Marking Detail-1 [Sheet]
FILE NAME: c:\pw_work\pwidot\carl.johnson@illinois.gov\d0858455\D672263-Design Final.dgn

USER NAME = carl.johnson	DESIGNED -	REVISED -	
	DRAWN -	REVISED -	
	CHECKED -	REVISED -	
PLOT DATE = 4/3/2025	DATE -	REVISED -	

STATE OF ILLINOIS
DEPARTMENT OF TRANSPORTATION

DETAIL SHEETS - PAVEMENT MARKINGS

SCALE: 1:250 | SHEET A002 OF 4 SHEETS | STA. 155+87.48 R2 TO STA. 161+87.48 R2

F.A.P RTE.	SECTION	COUNTY	TOTAL SHEETS	SHEET NO.
*	(1115BDR, 116SR)RS-5, 124RS-8	MORGAN	69	58

CONTRACT NO. 72263

ILLINOIS | FED. AID PROJECT

*US 67 / IL 100 / IL 104

EX CURVE
PI STA = 164+13.26
Δ = 11°18'19" (LT)
D = 01°29'47"
R = 3,829.26'
T = 379.01'
L = 755.56'
E = 18.71'
e = ____
PC STA = 160+34.25
PT STA = 167+89.81

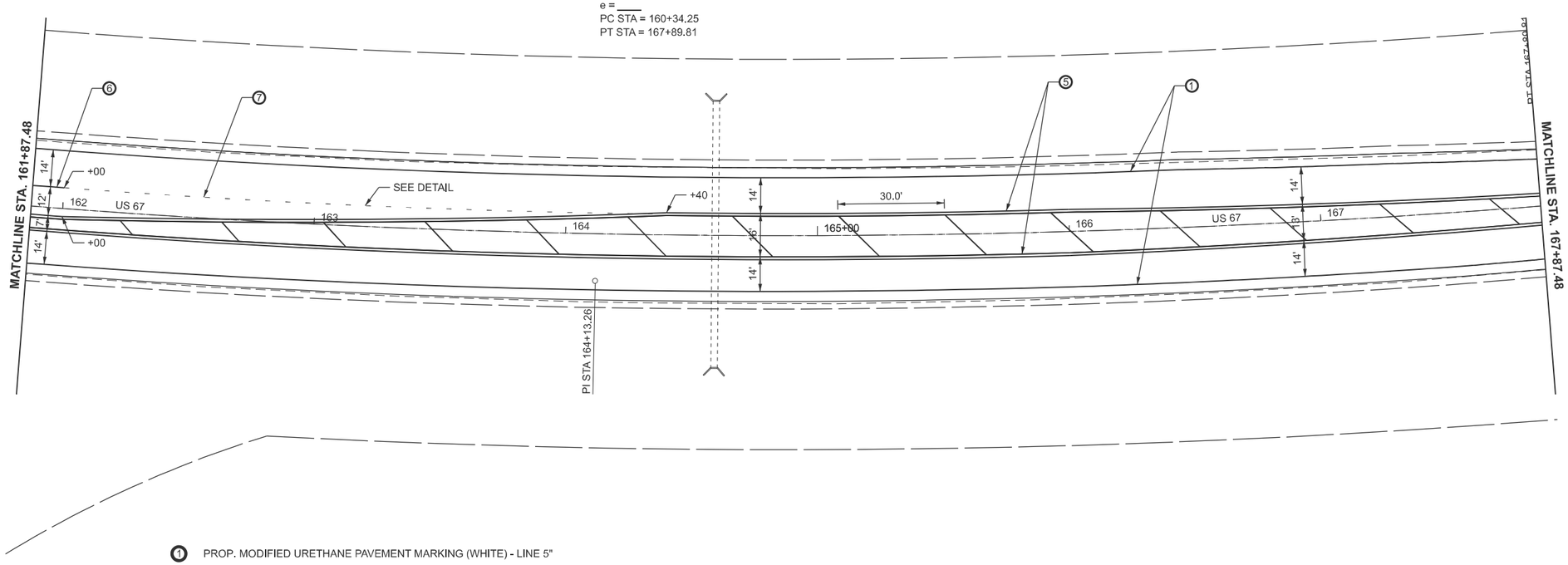

1. PROP. MODIFIED URETHANE PAVEMENT MARKING (WHITE) - LINE 5"
2. PROP. MODIFIED URETHANE PAVEMENT MARKING (WHITE SKIP DASH) - LINE 5"
3. PROP. MODIFIED URETHANE PAVEMENT MARKING (YELLOW SKIP DASH) - LINE 5"
4. PROP. MODIFIED URETHANE PAVEMENT MARKING (YELLOW) - LINE 5"
5. PROP. MODIFIED URETHANE PAVEMENT MARKING (DOUBLE YELLOW) - LINE 5"
6. PROP. MODIFIED URETHANE PAVEMENT MARKING (WHITE) - LINE 6"
7. PROP. MODIFIED URETHANE PAVEMENT MARKING (WHITE SKIP DASH) - LINE 6"
8. PROP. MODIFIED URETHANE PAVEMENT MARKING (WHITE) - LINE 8"
9. PROP. MODIFIED URETHANE PAVEMENT MARKING (WHITE) - LINE 12"
10. PROP. MODIFIED URETHANE PAVEMENT MARKING (YELLOW) - LINE 12"
11. PROP. MODIFIED URETHANE PAVEMENT MARKING (WHITE) - LINE 24
12. PROP. MODIFIED URETHANE PAVEMENT MARKING (WHITE) - LETTERS & SYMBOLS

MODEL: ExCL20 - Pavement Marking Detail-2 [Sheet]
FILE NAME: c:\pw_work\pwidot\carl.johnson@illinois.gov\d0858455\D672263-Design Final.dgn

USER NAME = carl.johnson	DESIGNED -	REVISED -	
	DRAWN -	REVISED -	
	CHECKED -	REVISED -	
PLOT DATE = 4/3/2025	DATE -	REVISED -	

STATE OF ILLINOIS
DEPARTMENT OF TRANSPORTATION

DETAIL SHEETS - PAVEMENT MARKINGS

SCALE: CUSTOM 1:300 | SHEET A003 OF 4 SHEETS | STA. 161+87.48 R2 TO STA. 167+87.48 R2

F.A.P RTE.	SECTION	COUNTY	TOTAL SHEETS	SHEET NO.
*	(1115BDR, 116SR)RS-5, 124RS-8	MORGAN	69	59
		CONTRACT NO. 72263		
	ILLINOIS	FED. AID PROJECT		

*US 67 / IL 100 / IL 104

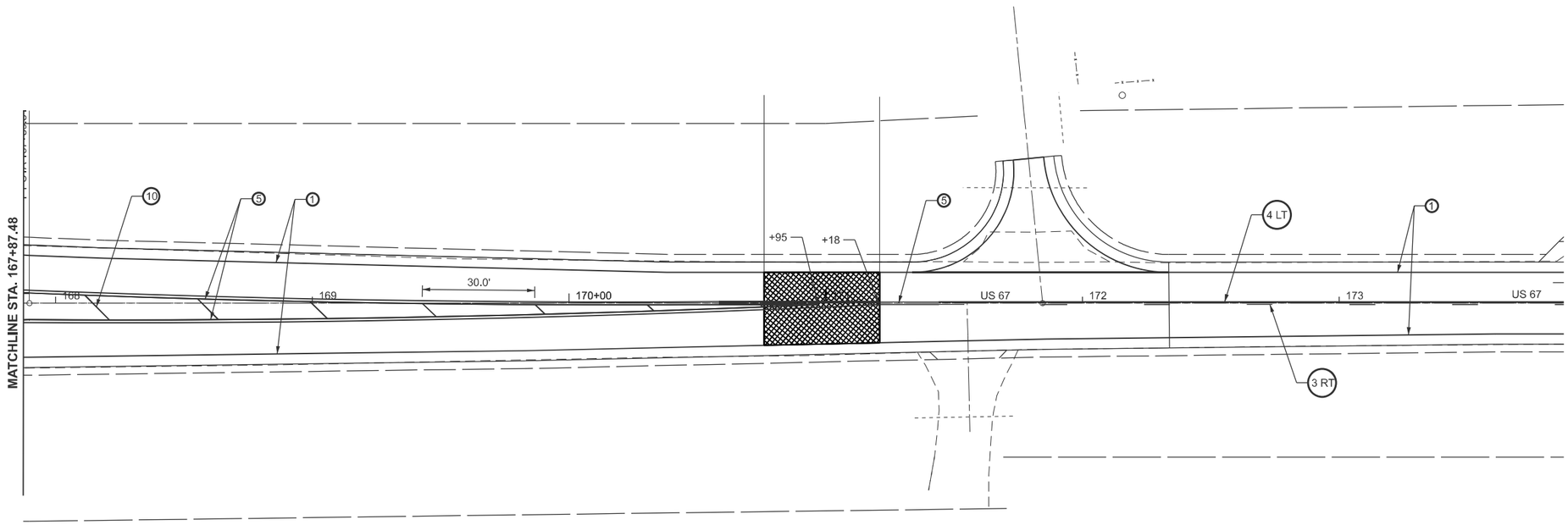

1. PROP. MODIFIED URETHANE PAVEMENT MARKING (WHITE) - LINE 5"
2. PROP. MODIFIED URETHANE PAVEMENT MARKING (WHITE SKIP DASH) - LINE 5"
3. PROP. MODIFIED URETHANE PAVEMENT MARKING (YELLOW SKIP DASH) - LINE 5"
4. PROP. MODIFIED URETHANE PAVEMENT MARKING (YELLOW) - LINE 5"
5. PROP. MODIFIED URETHANE PAVEMENT MARKING (DOUBLE YELLOW) - LINE 5"
6. PROP. MODIFIED URETHANE PAVEMENT MARKING (WHITE) - LINE 6"
7. PROP. MODIFIED URETHANE PAVEMENT MARKING (WHITE SKIP DASH) - LINE 6"
8. PROP. MODIFIED URETHANE PAVEMENT MARKING (WHITE) - LINE 8"
9. PROP. MODIFIED URETHANE PAVEMENT MARKING (WHITE) - LINE 12"
10. PROP. MODIFIED URETHANE PAVEMENT MARKING (YELLOW) - LINE 12"
11. PROP. MODIFIED URETHANE PAVEMENT MARKING (WHITE) - LINE 24
12. PROP. MODIFIED URETHANE PAVEMENT MARKING (WHITE) - LETTERS & SYMBOLS

MODEL: ExCL20 - Pavement Marking Detail-3 [Sheet]
FILE NAME: c:\pw_work\pwidot\carl.johnson@illinois.gov\d0858455\D672263-Design Final.dgn

USER NAME = carl.johnson	DESIGNED -	REVISED -	
	DRAWN -	REVISED -	
	CHECKED -	REVISED -	
PLOT DATE = 4/3/2025	DATE -	REVISED -	

STATE OF ILLINOIS
DEPARTMENT OF TRANSPORTATION

DETAIL SHEETS - PAVEMENT MARKINGS

SCALE: CUSTOM 1:300 | SHEET A004 OF 4 SHEETS | STA. 167+87.48 R2 TO STA. 173+87.48 R2

F.A.P RTE.	SECTION	COUNTY	TOTAL SHEETS	SHEET NO.
*	(1115BDR, 116SR)RS-5, 124RS-8	MORGAN	69	60
		CONTRACT NO. 72263		
		ILLINOIS	FED. AID PROJECT	

*US 67 / IL 100 / IL 104

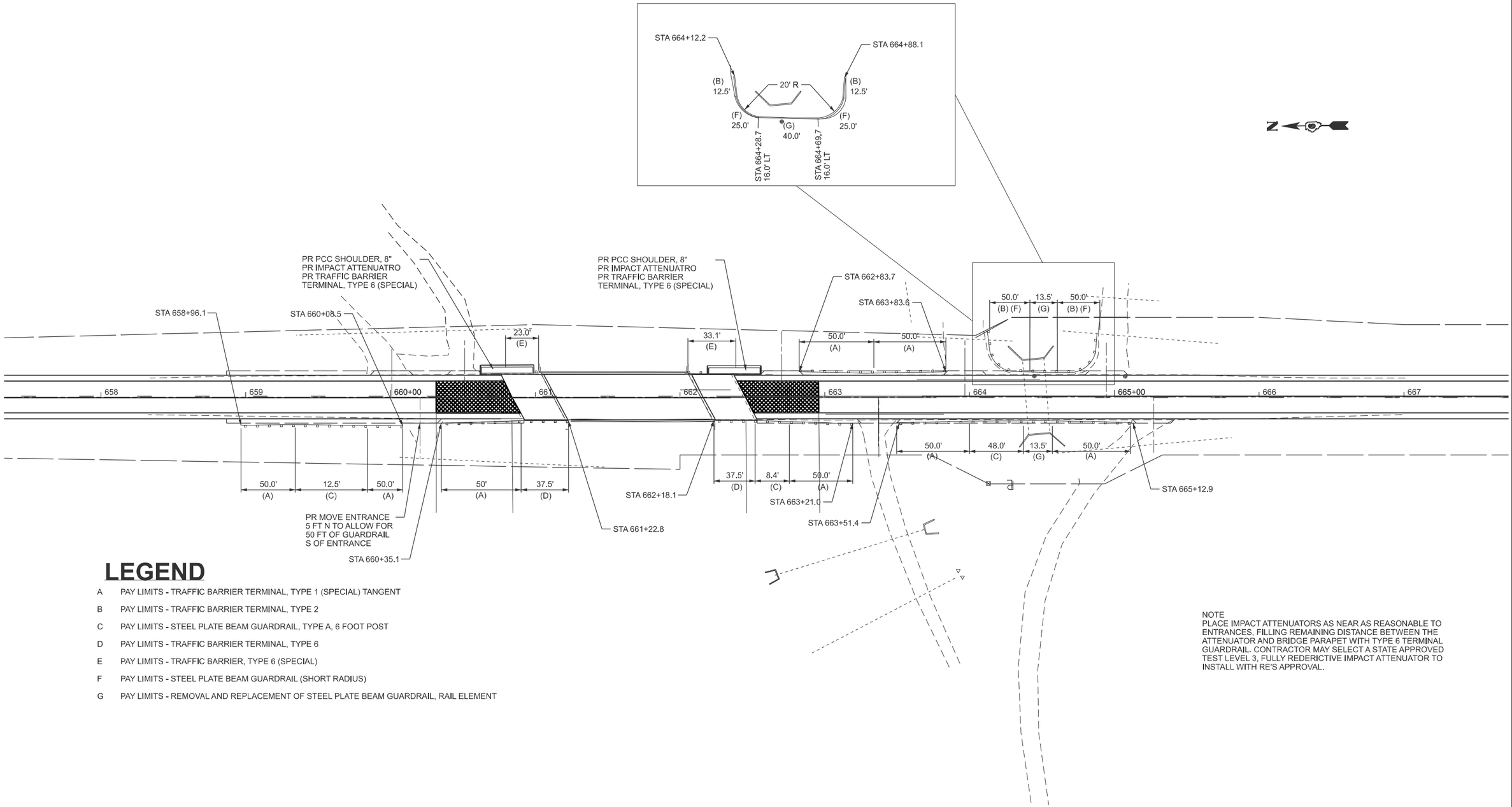

LEGEND

A PAY LIMITS - TRAFFIC BARRIER TERMINAL, TYPE 1 (SPECIAL) TANGENT

B PAY LIMITS - TRAFFIC BARRIER TERMINAL, TYPE 2

C PAY LIMITS - STEEL PLATE BEAM GUARDRAIL, TYPE A, 6 FOOT POST

D PAY LIMITS - TRAFFIC BARRIER TERMINAL, TYPE 6

E PAY LIMITS - TRAFFIC BARRIER, TYPE 6 (SPECIAL)

F PAY LIMITS - STEEL PLATE BEAM GUARDRAIL (SHORT RADIUS)

G PAY LIMITS - REMOVAL AND REPLACEMENT OF STEEL PLATE BEAM GUARDRAIL, RAIL ELEMENT

NOTE
PLACE IMPACT ATTENUATORS AS NEAR AS REASONABLE TO ENTRANCES, FILLING REMAINING DISTANCE BETWEEN THE ATTENUATOR AND BRIDGE PARAPET WITH TYPE 6 TERMINAL GUARDRAIL. CONTRACTOR MAY SELECT A STATE APPROVED TEST LEVEL 3, FULLY REDERICTIVE IMPACT ATTENUATOR TO INSTALL WITH RE'S APPROVAL.

MODEL: Guardrail Detail [Sheet]
FILE NAME: c:\pw_work\pwidot\carl.johnson@illinois.gov\d0858455\D672263-Design Final.dgn

USER NAME = carl.johnson	DESIGNED -	REVISED -	
	DRAWN -	REVISED -	
	CHECKED -	REVISED -	
PLOT DATE = 4/3/2025	DATE -	REVISED -	

STATE OF ILLINOIS
DEPARTMENT OF TRANSPORTATION

DETAIL SHEETS - GUARDRAIL

SCALE: 1:400 | SHEET A002 OF 17 SHEETS | STA. 654+49.24 TO STA. 669+49.24

F.A.P RTE.	SECTION	COUNTY	TOTAL SHEETS	SHEET NO.
*	(1115BDR, 116SR)RS-5, 124RS-8	MORGAN	69	61
		CONTRACT NO. 72263		
	ILLINOIS	FED. AID PROJECT		

*US 67 / IL 100 / IL 104

NOTES

THE IMPACT ATTENUATOR SHALL BE FULLY REDIRECTIVE, NARROW, AND MEET TEST LEVEL 3 CRASH REQUIREMENTS.

ATTENUATOR ANCHORS MUST BE ANCHORED IN THE PR PCC PAD. NO ATTENUATOR ANCHORS WILL BE ALLOWED TO BE DRILLED INTO THE APPROACH PAVEMENT.

THE IMPACT ATTENUATOR SHALL BE ON IDOT'S QUALIFIED PRODUCT LIST

THE TRAFFIC TERMINAL BARRIER, TYPE 6 SHALL BE AFFIXED TO THE BRIDGE PARAPET AS WELL AS THE TRAFFIC SIDE OF THE IMPACT ATTENUATOR.

THE QUANTITIES AND MEASUREMENTS FOR THE IMPACT ATTENUATOR, PCC SHOULDER, AND TRAFFIC BARRIER TERMINAL, TYPE 6, ARE ASSUMED MAXIMUMS. QUANTITIES MAY BE ADJUSTED AS REQUIRED BY THE MANUFACTURE'S RECOMMENDATIONS.

ALL EARTHWORK REQUIRED TO INSTALL THE PCC SHOULDER (ANCHOR PAD) SHALL BE CONSIDERED INCLUDED IN THE COST OF THE PCC SHOULDER INSTALLATION.

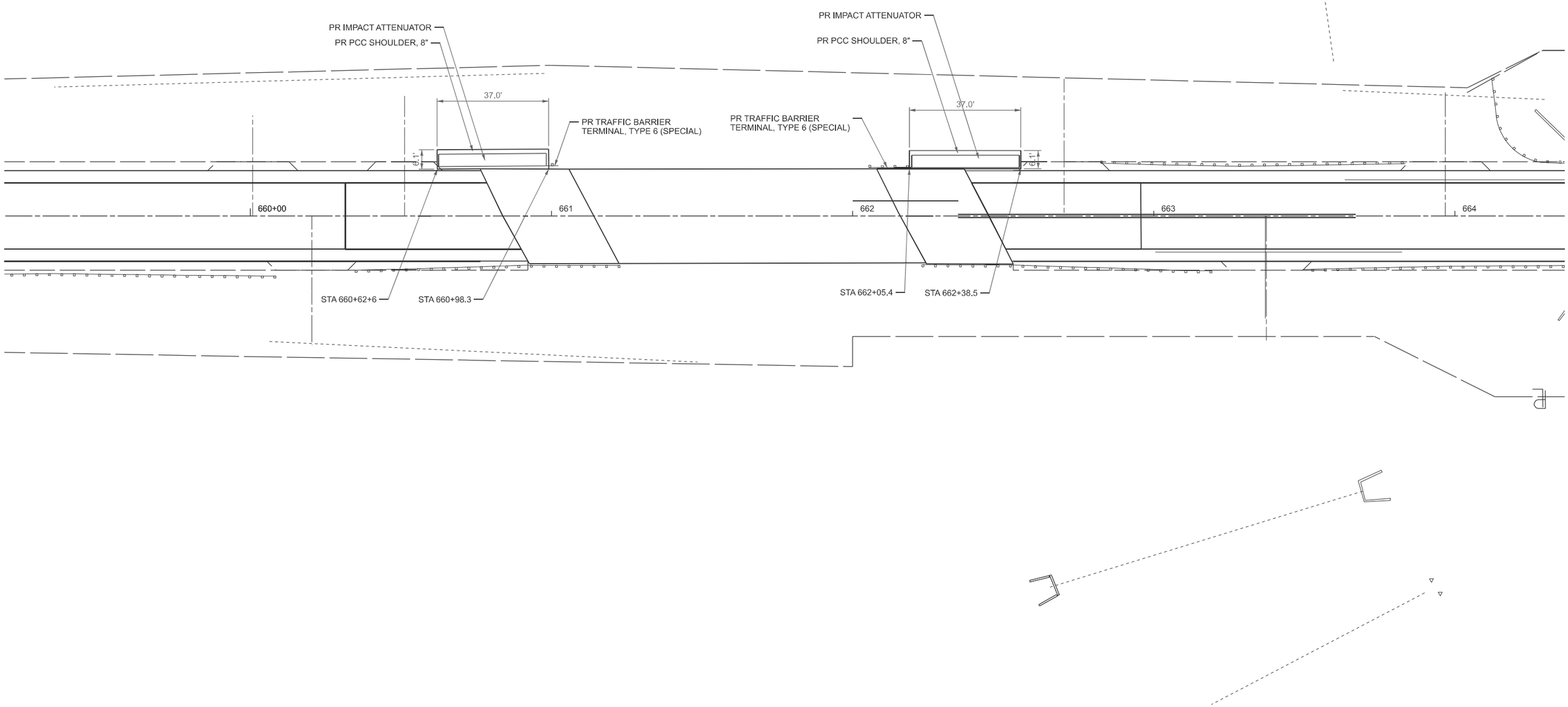

MODEL: Crash Cushions [Sheet]
FILE NAME: c:\pw_work\pwidot\carl.johnson@illinois.gov\d0858455\D672263-Design Final.dgn

USER NAME = carl.johnson	DESIGNED -	REVISED -	
	DRAWN -	REVISED -	
	CHECKED -	REVISED -	
PLOT DATE = 4/3/2025	DATE -	REVISED -	

STATE OF ILLINOIS
DEPARTMENT OF TRANSPORTATION

CRASH ATTENUATOR DETAIL

SCALE: | SHEET A003 OF 17 SHEETS | STA. | TO STA.

F.A.P RTE.	SECTION	COUNTY	TOTAL SHEETS	SHEET NO.
*	(1115BDR, 116SR)RS-5, 124RS-8	MORGAN	69	62

CONTRACT NO. 72263

ILLINOIS | FED. AID PROJECT

*US 67 / IL 100 / IL 104

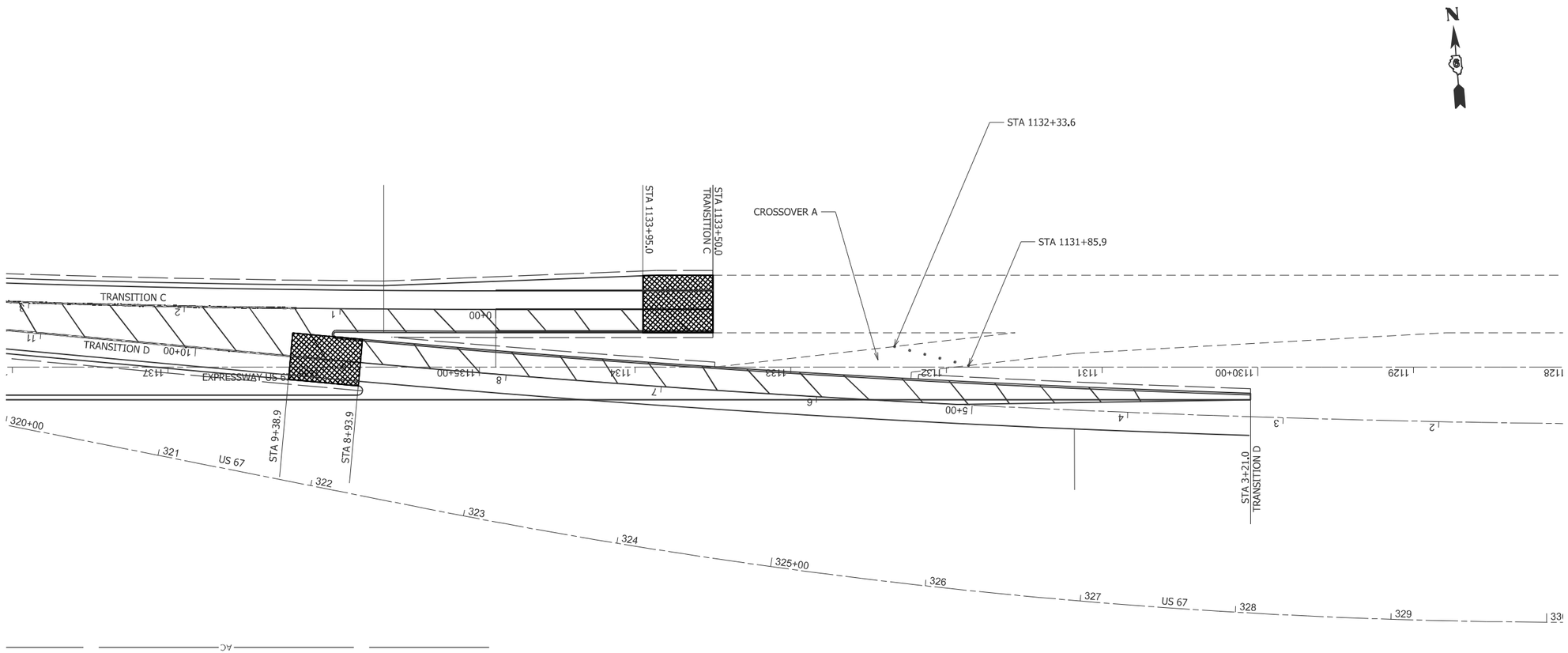

MODEL: Crossover Cone Detail - Crossover Cone Detail [Sheet]
FILE NAME: c:\pw_work\pwidot\carl.johnson@illinois.gov\d0858455\D672263-Detail for Crossover.dgn

USER NAME = carl.johnson	DESIGNED -	REVISED -	
	DRAWN -	REVISED -	
	CHECKED -	REVISED -	
PLOT DATE = 4/3/2025	DATE -	REVISED -	

STATE OF ILLINOIS
DEPARTMENT OF TRANSPORTATION

CROSSOVER CONE DETAIL

SCALE: CUSTOM 1:461.53 SHEET A004 OF 17 SHEETS STA. 1128+04.06 TO STA. 1138+04.06

F.A.P RTE.	SECTION	COUNTY	TOTAL SHEETS	SHEET NO.
*	(1115BDR, 116SR)RS-5, 124RS-8	MORGAN	69	63
		CONTRACT NO. 72263		
	ILLINOIS	FED. AID PROJECT		

*US 67 / IL 100 / IL 104

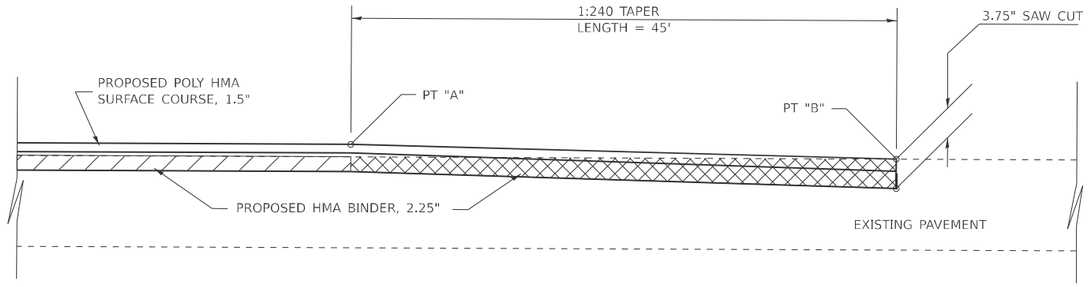

HMA SURFACE REMOVAL, 1.5"

HMA SURFACE REMOVAL - BUTT JOINT

	PT "A"	PT "B"
US 67	STA 559+76.61 STA 311+66.60	STA 559+26.61 SAT 312+16.60
IL 100	STA 23+25.87	STA 23+70.87
SPUNKY RIDGE RD	STA 11+04.95	STA 11+49.94

MODEL: Detail - Butt Joint [Sheet]
FILE NAME: c:\pw_work\pwidot\carl.johnson@illinois.gov\d0858453\D672263 Sht - Details.dgn

USER NAME = carl.johnson	DESIGNED -	REVISED -	
	DRAWN -	REVISED -	
	CHECKED -	REVISED -	
PLOT DATE = 4/3/2025	DATE -	REVISED -	

STATE OF ILLINOIS
DEPARTMENT OF TRANSPORTATION

BUTT JOINT DETAIL

SCALE: | SHEET A005 OF 17 SHEETS | STA. | TO STA.

F.A.P RTE.	SECTION	COUNTY	TOTAL SHEETS	SHEET NO.
*	(1115BDR, 116SR)RS-5, 124RS-8	MORGAN	69	64

CONTRACT NO. 72263

ILLINOIS | FED. AID PROJECT

*US 67 / IL 100 / IL 104

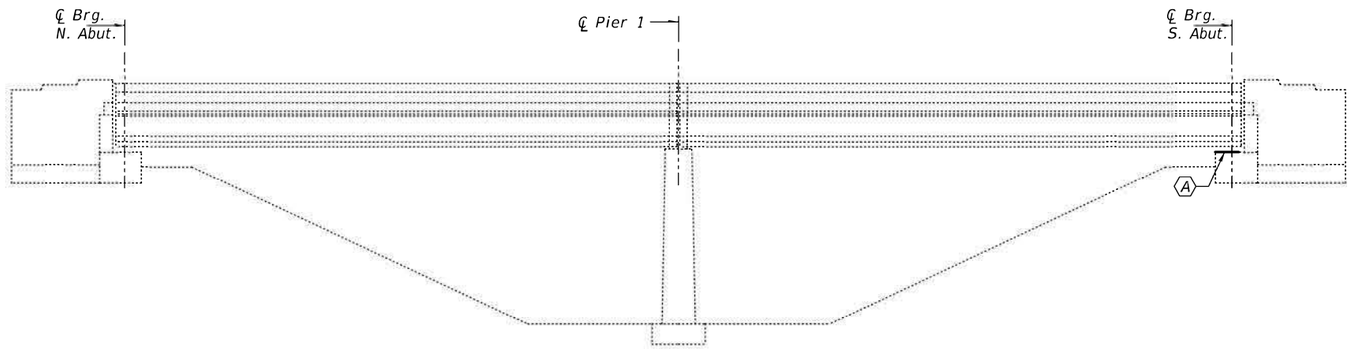

ELEVATION

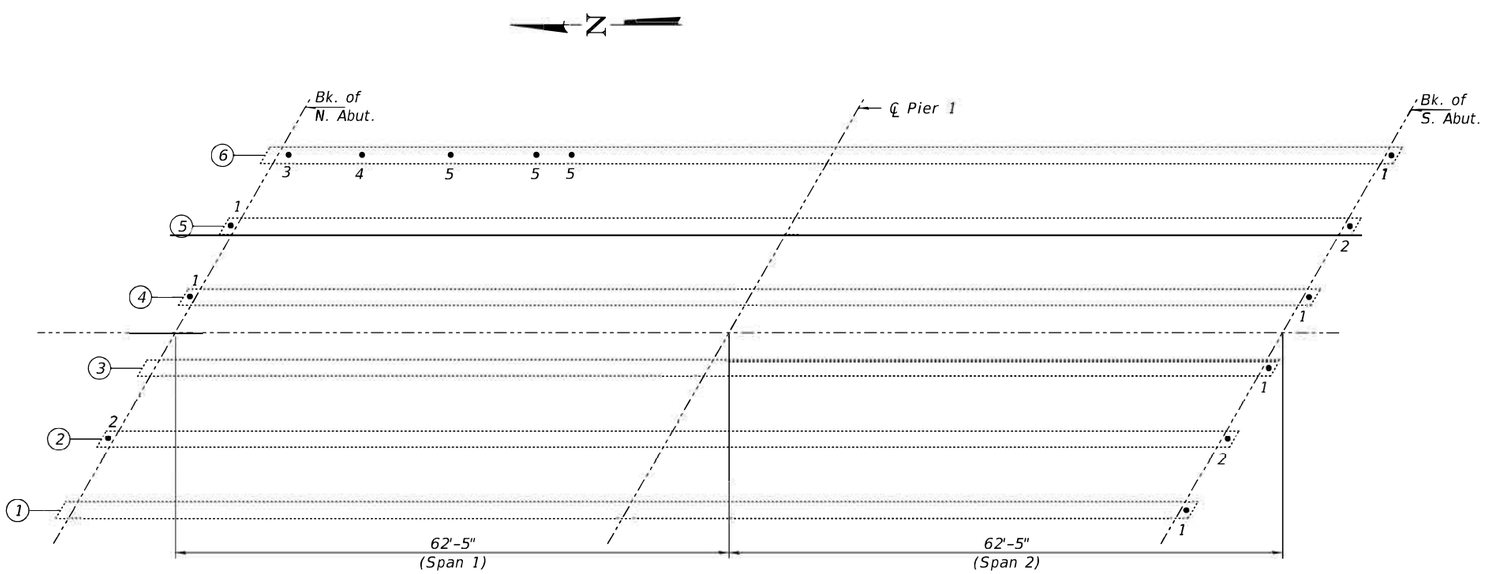

FRAMING PLAN

• # – Repair location with Repair Type Number

(A) – Substructure Repair

GENERAL NOTES

All structural steel shall conform to AASHTO Classification M-270 Gr. 36, unless otherwise noted.

Plan dimensions and details relative to the existing structure have been taken from existing plans and are subject to nominal construction variations. The Contractor shall field verify existing dimensions and details affecting new construction and make necessary approved adjustments prior to construction or ordering of materials. Such variations shall not be cause for additional compensation for a change in scope of the work, however, the Contractor will be paid for the quantity actually furnished at the unit price bid for the work.

The existing concrete surface shall be cleaned and prepared in accordance with the Special Provisions.

See Special Provisions for "FRP Strengthening for PPC I-Beam Repairs".

See Special Provisions for "Precast Prestressed Concrete I-Beam Repair".

Acrylic coating shall be placed over Fiber Wrap repairs. Two coats shall be applied.

Reinforcement bars designated (E) shall be epoxy coated.

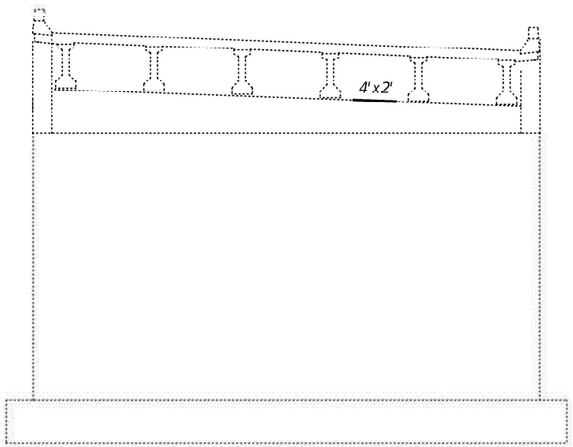

ELEVATION VIEW OF SOUTH ABUTMENT
(Looking South)

TOTAL BILL OF MATERIAL

ITEM	UNIT	QUANTITY
Concrete Sealer	Sq. Ft.	10
Fiber Wrap	Sq. Ft.	304
Acrylic Coating	Sq. Yd.	68
Precast Prestressed Concrete I-Beam Repair	Sq. Ft.	38
Structural Repair of Concrete (Depth ≤ 5")	Sq. Ft.	10

LICENSED STRUCTURAL ENGINEER
JAYME F SCHIFF
081-005540
STATE OF ILLINOIS

EXPIRES 11-30-2026

DESIGNED - JSB	EXAMINED	DATE - MAY 1, 2025	STATE OF ILLINOIS DEPARTMENT OF TRANSPORTATION
CHECKED - SMR	ENGINEER OF STRUCTURAL SERVICES		
DRAWN - Venkata Ramana Reddy	PASSED	REVISED -	
CHECKED - JSB SMR	ENGINEER OF BRIDGES AND STRUCTURES	REVISED -	

GENERAL PLAN AND ELEVATION
US 67 IL 100 & IL 104 OVER COON RUN
SN 069-0017
SHEET NO. 1 OF 2 SHEETS

F.A.P. RTE.	SECTION	COUNTY	TOTAL SHEETS	SHEET NO.
310	(115BDR,116SR)RS-5, 124RS-8	MORGAN	69	65

CONTRACT NO. 72263

ILLINOIS | FED. AID PROJECT

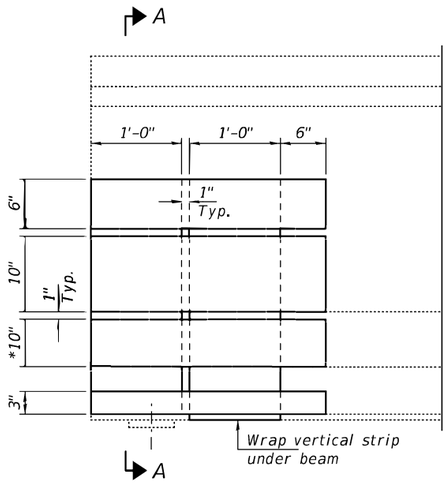

REPAIR TYPE 1
(6 Required)
(Location: N. End of Beam #6 Interior)
(1 Required)

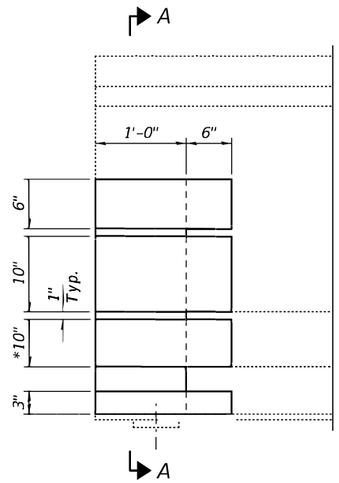

REPAIR TYPE 2
(3 Required)

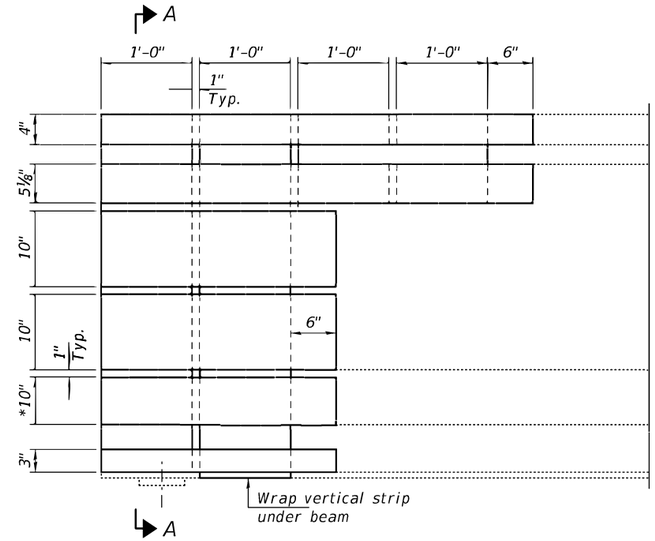

REPAIR TYPE 3
(Location: N. End of Beam #6 Exterior Facia)
(1 Required)

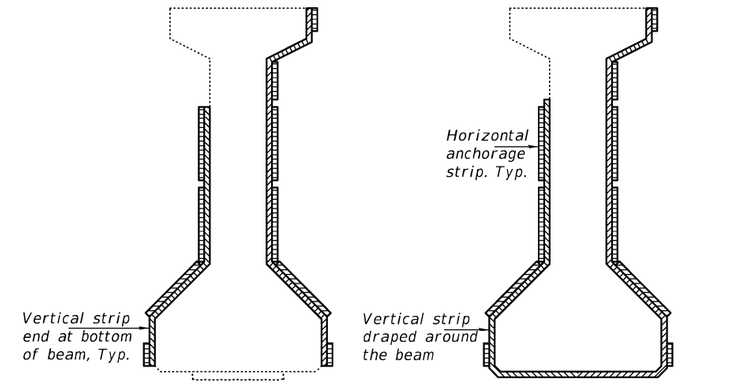

SECTION THRU BEARING
SECTION OUTSIDE BEARING

SECTION A-A

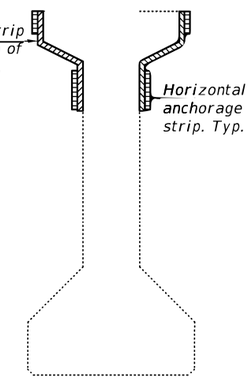

SECTION B-B

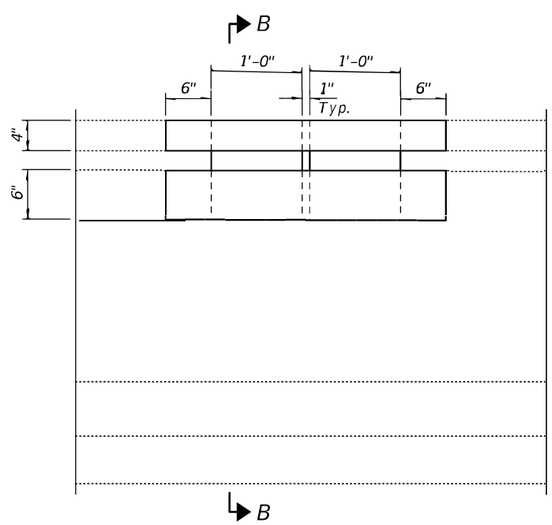

REPAIR TYPE 4
(1 Required)

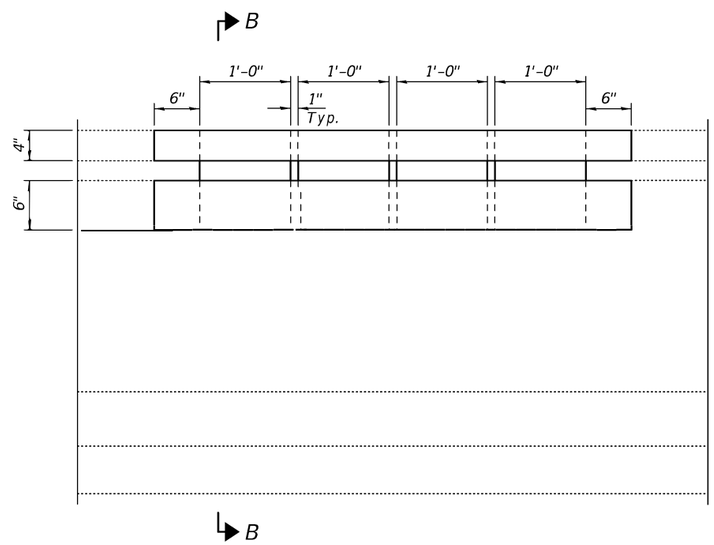

REPAIR TYPE 5
(3 Required)

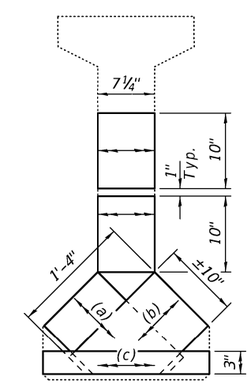

FRP TREATMENT
AT END OF BEAM

Note:
Place FRP in the following order (a), (b) and (c).

direction
FRP

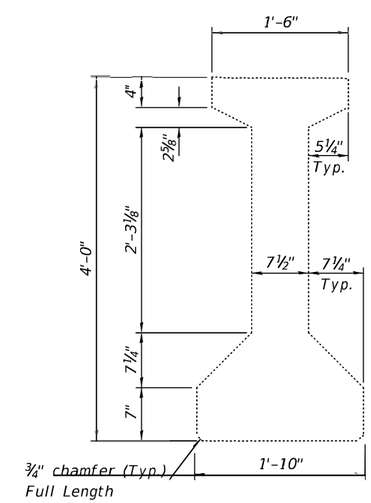

CROSS SECTION
(Showing Dimensions)

DESIGNED - JSB	EXAMINED	DATE - MAY 1, 2025	STATE OF ILLINOIS DEPARTMENT OF TRANSPORTATION
CHECKED - SMR	ENGINEER OF STRUCTURAL SERVICES		
DRAWN - Venkat Ramana Reddy	PASSED	REVISED -	
CHECKED - JSB SMR	ENGINEER OF BRIDGES AND STRUCTURES	REVISED -	

FRP REPAIR DETAILS
SN 069-0017
SHEET NO. 2 OF 2 SHEETS

F.A.P. RTE.	SECTION	COUNTY	TOTAL SHEETS	SHEET NO.
310	(115BDR,116SR)RS-5, 124RS-8	MORGAN	69	66
		CONTRACT NO. 72263		
	ILLINOIS	FED. AID PROJECT		

GENERAL NOTES

All structural steel shall conform to AASHTO Classification M-270 Gr. 36, unless otherwise noted.

Plan dimensions and details relative to to the existing structure have been taken from existing plans and are subject to nominal construction variations. The Contractor shall field verify existing dimensions and details affecting new construction and make necessary approved adjustments prior to construction or ordering of materials. Such variations shall not be cause for additional compensation for a change in scope of the work, however, the Contractor will be paid for the quantity actually furnished at the unit price bid for the work.

Existing reinforcement bars extending into the removal area shall be cleaned,straightened and incorporated into the new construction. Any reinforcement bars that are damaged during concrete removal shall be replaced with an approved bar splicer or anchorage system. Cost included with Concrete Removal.

Joint openings shall be adjusted according to Article 520.04 of the Standard Specifications when the deck is poured at an ambient temperature other than 50° F.

Traffic will be maintained using stage construction.

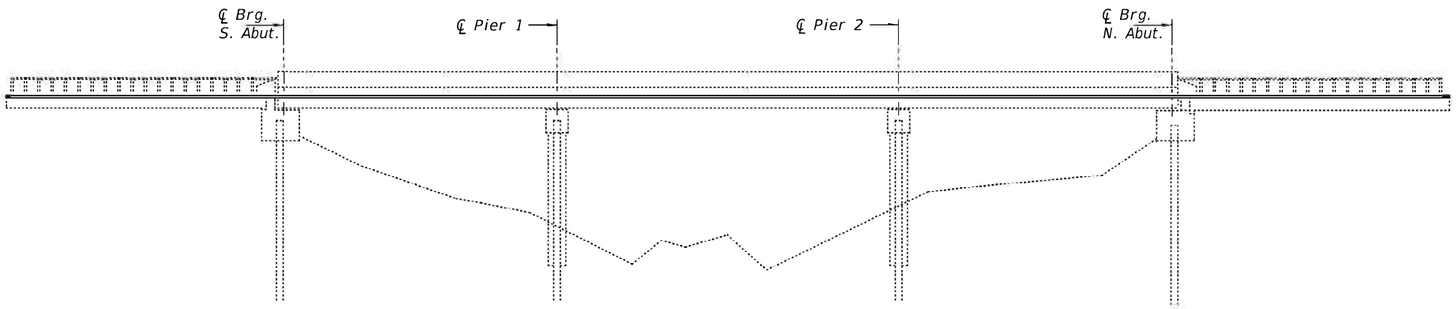

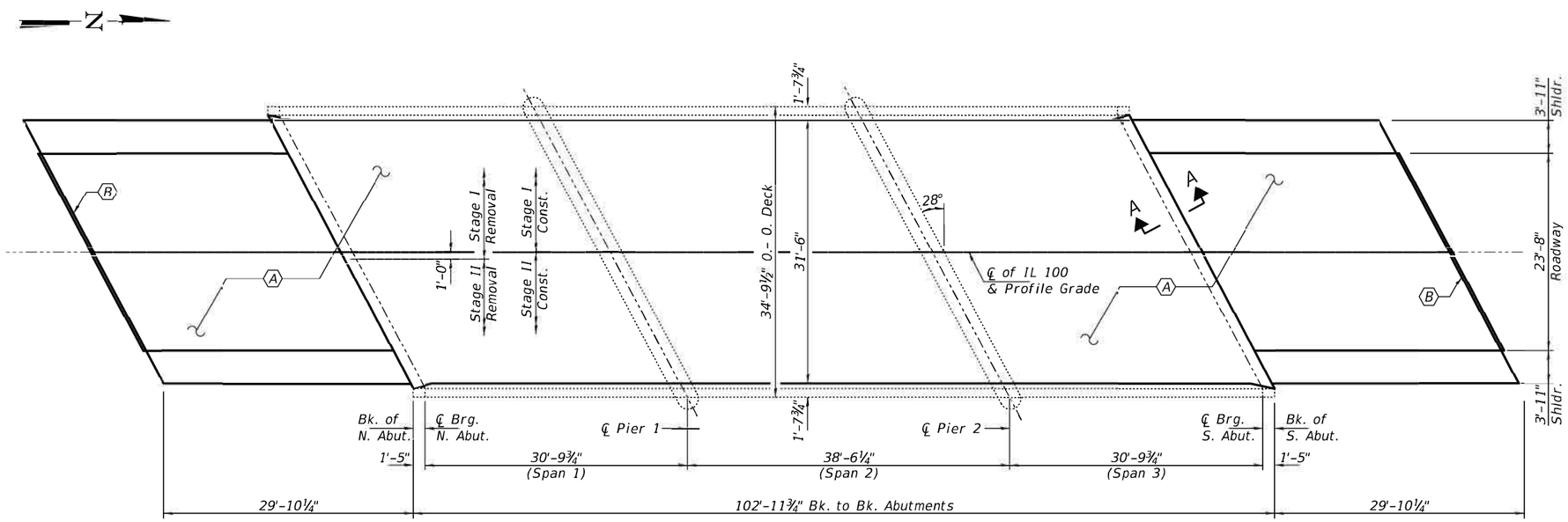

PLAN

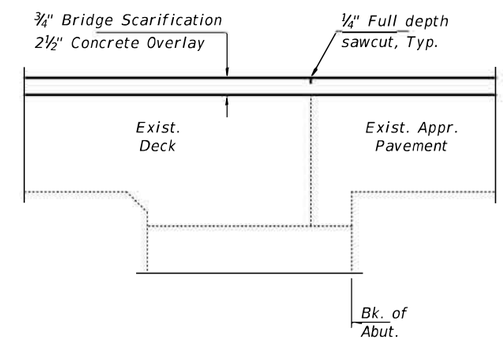

SEC A-A

Ⓐ – ¾" Bridge Deck Scarification, 2½" Microsilica Concrete Overlay

Ⓑ – Polymer Concrete Nosing (See Repair B).

* Ⓒ – Approach Slab Patching. Estimated quantity, Size of patches and locations to be determined by the Engineer in the field and documented on sheet 2 of 3.

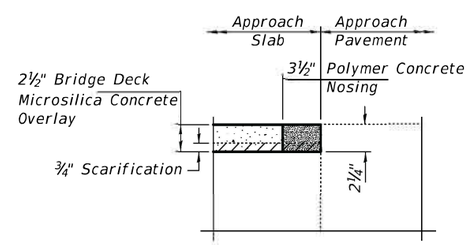

REPAIR B

TOTAL BILL OF MATERIAL

	ITEM	UNIT	QUANTITY
	Bridge Deck Microsilica Concrete Overlay 2½"	Sq. Yd.	570.0
	Bridge Deck Scarification ¾"	Sq. Yd.	570.0
	Polymer Concrete	Cu. Ft.	2.9
	Deck Slab Repair (Full Depth, Type I)	Sq. Yd.	5
*	Approach Slab Repair (Partial Depth)	Sq. Yd.	10

LICENSED STRUCTURAL ENGINEER
JAYME E. SCHIFF
081-005540
STATE OF ILLINOIS

EXPIRES 11-30-2026

DESIGNED - JSB	EXAMINED	DATE - MAY 1, 2025	STATE OF ILLINOIS DEPARTMENT OF TRANSPORTATION
CHECKED - SMR	ENGINEER OF STRUCTURAL SERVICES		
DRAWN - Venkata Ramana Reddy	PASSED	REVISED -	
CHECKED - JSB SMR	ENGINEER OF BRIDGES AND STRUCTURES	REVISED -	

GENERAL PLAN AND ELEVATION
US 67 & ILL 100 OVER WILLOW CREEK
SN 069-0065
SHEET NO. 1 OF 3 SHEETS

F.A.P. RTE.	SECTION	COUNTY	TOTAL SHEETS	SHEET NO.
310	(115BDR,116SR)RS-5, 124RS-8	MORGAN	69	67

CONTRACT NO. 72263

ILLINOIS | FED. AID PROJECT

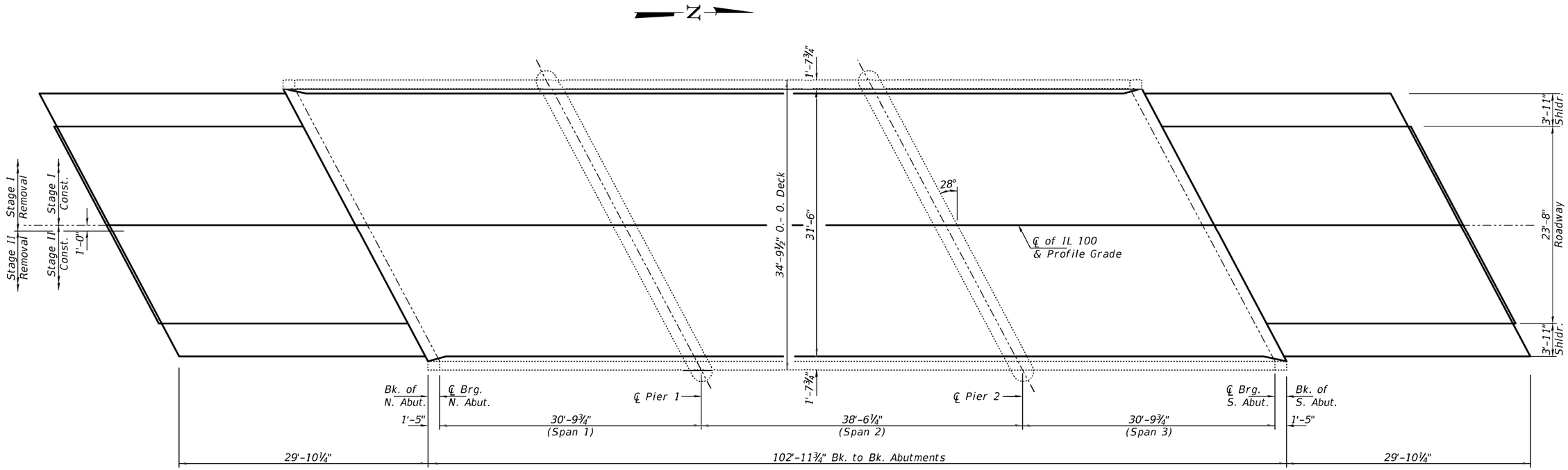

PLAN

Note:
The quantity of Deck Slab Repair (Full Depth, Type I) and Approach Slab Repair (Partial Depth) in plans are estimated. Engineer in field shall be responsible to figure out the actual locations and show it on As-built Plans.

BILL OF MATERIAL

ITEM	UNIT	QUANTITY
Deck Slab Repair (Full Depth, Type I)	Sq. Yd.	5
Approach Slab Repair (Partial Depth)	Sq. Yd.	10

DESIGNED - JSB	EXAMINED	DATE - MAY 1, 2025	STATE OF ILLINOIS DEPARTMENT OF TRANSPORTATION
CHECKED - SMR	ENGINEER OF STRUCTURAL SERVICES		
DRAWN - Venkata Ramana Reddy	PASSED	REVISED -	
CHECKED - JSB SMR	ENGINEER OF BRIDGES AND STRUCTURES	REVISED -	

DECK PATCHING DETAILS
SN 069-0065
SHEET NO. 2 OF 3 SHEETS

F.A.P. RTE.	SECTION	COUNTY	TOTAL SHEETS	SHEET NO.
310	(115BDR,116SR)RS-5, 124RS-8	MORGAN	69	68

CONTRACT NO. 72263
ILLINOIS | FED. AID PROJECT

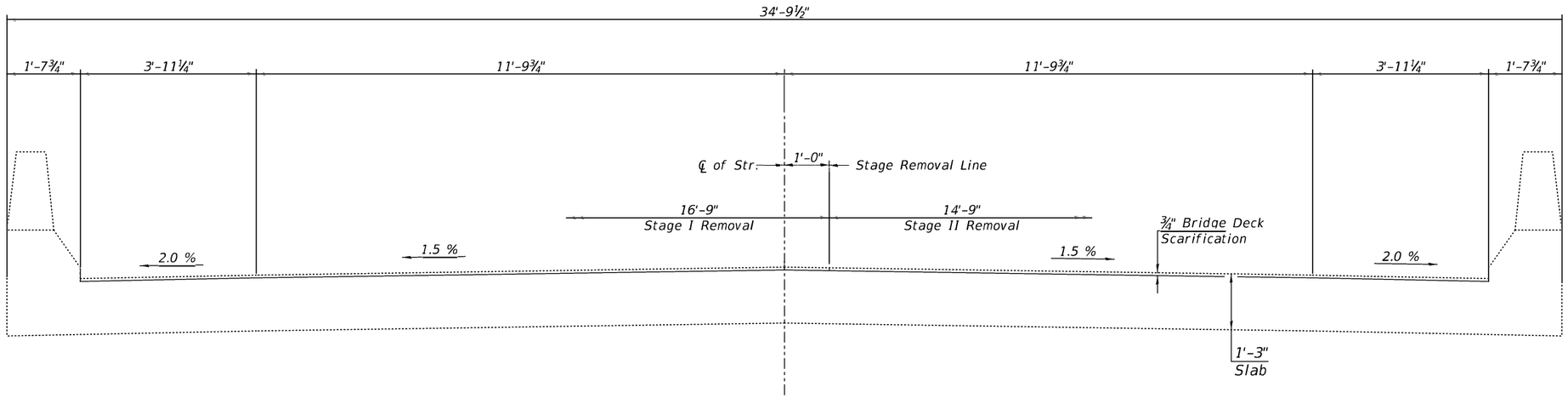

CROSS SECTION THRU REMOVAL AT MIDSPAN

(Looking North)

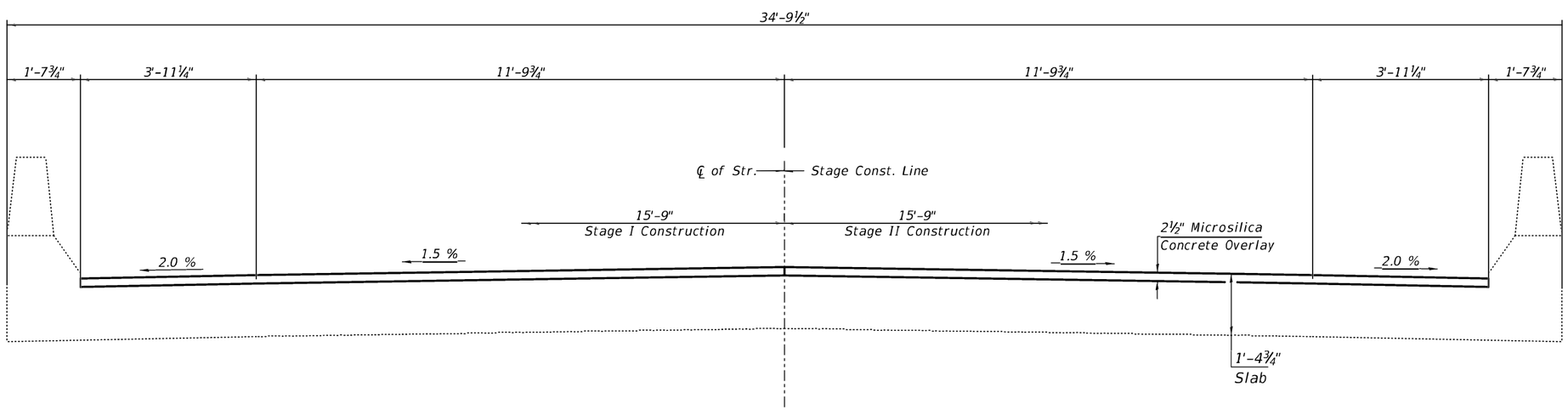

CROSS SECTION THRU REMOVAL AT MIDSPAN

(Looking North)

DESIGNED - JSB	EXAMINED	ENGINEER OF STRUCTURAL SERVICES	DATE - MAY 1, 2025	STATE OF ILLINOIS DEPARTMENT OF TRANSPORTATION	CROSS SECTIONS & STAGING DETAILS SN 069-0065	F.A.P. RTE.	SECTION	COUNTY	TOTAL SHEETS / SHEET NO.
CHECKED - SMR						310	(115BDR,116SR)RS-5, 124RS-8	MORGAN	69 / 69
DRAWN - Venkat Ramana Reddy	PASSED	ENGINEER OF BRIDGES AND STRUCTURES	REVISED -					CONTRACT NO. 72263	
CHECKED - JSB SMR			REVISED -		SHEET NO. 3 OF 3 SHEETS			ILLINOIS	FED. AID PROJECT