06-13-2025 LETTING ITEM 057

F.A.I. RTE.	SECTION	COUNTY	TOTAL SHEETS	SHEET NO.
57	((38-7B)BR)BR	IROQUOIS	84	1
	ILLINOIS	CONTRACT NO. 66M23		

STATE OF ILLINOIS
DEPARTMENT OF TRANSPORTATION

P-93-031-22
D-93-062-24

FOR INDEX OF SHEETS, SEE SHEET NO. 2
FOR LIST OF HIGHWAY STANDARDS, SEE SHEET NO. 2

PROPOSED HIGHWAY PLANS

FAI ROUTE 57 (I-57) OVER LOUIS CREEK
SECTION ((38-7B)BR)BR

STRUCTURE REPLACEMENT
IROQUOIS COUNTY

C-93-100-24

BEGIN PROJECT
STA 1180+40.00

END PROJECT
STA 1191+00.00

STRUCTURE REPLACEMENT
(OVER LOUIS CREEK)
STA 1187+00.00
EXIST. S.N. 038-0151 (SB)
PROP. S.N. 038-0229 (SB)
EXIST. S.N. 038-0152 (NB)
PROP. S.N. 038-0230 (NB)

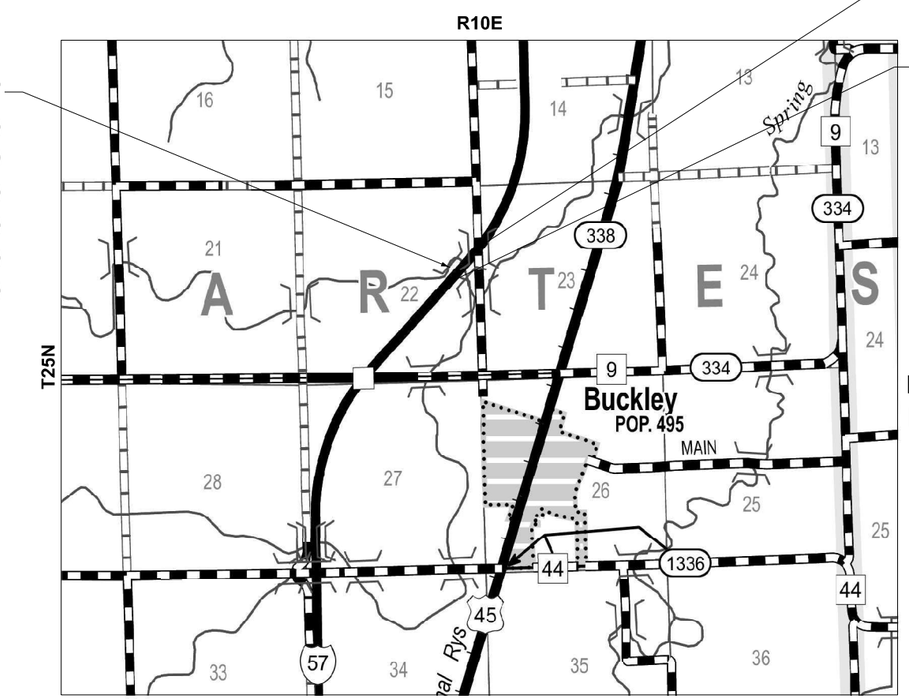

N

LOCATION MAP
NOT TO SCALE

TRAFFIC DATA - I-57
INTERSTATE (CLASS I TRUCK ROUTE)
2023 ADT = 17500
P.V. = 57.8%; S.U. = 3.3%; M.U. = 38.9%

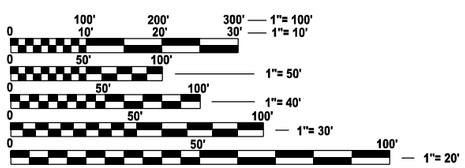

FULL SIZE PLANS HAVE BEEN PREPARED USING STANDARD ENGINEERING SCALES. REDUCED SIZED PLANS WILL NOT CONFORM TO STANDARD SCALES. IN MAKING MEASUREMENTS ON REDUCED PLANS, THE ABOVE SCALES MAY BE USED.

J.U.L.I.E.
JOINT UTILITY LOCATION INFORMATION FOR EXCAVATION
1-800-892-0123
OR 811

STATE OF ILLINOIS
DEPARTMENT OF TRANSPORTATION

SUBMITTED March 25, 20 25
Trisha Thompson REGIONAL ENGINEER

May 9, 20 25
ENGINEER OF DESIGN AND ENVIRONMENT

May 9, 20 25
DIRECTOR OF HIGHWAYS PROJECT IMPLEMENTATION

DISTRICT 3 NO. (815) 434-6131
PROJECT ENGINEER: JOSEPH KANNEL, PE
UNIT CHIEF: DARCY MITCHELL
TOWNSHIP(S): ARTESIA TOWNSHIP
CONTRACT NO. 66M23

GROSS LENGTH = 1060.00 FT. = 0.201 MILE
NET LENGTH = 1060.00 FT. = 0.201 MILE

EFK•Moen Civil Engineering Design

OATES ASSOCIATES
www.oatesassociates.com
ILLINOIS DESIGN FIRM LICENSE NO.: 184.001115

PRINTED BY THE AUTHORITY
OF THE STATE OF ILLINOIS

REV. 4/7/25

INDEX OF SHEETS

HIGHWAY STANDARDS

000001-08	STANDARD SYMBOLS, ABBREVIATIONS AND PATTERNS
001001-02	AREAS OF REINFORCEMENT BARS
001006	DECIMAL OF AN INCH AND OF A FOOT
202001-01	EARTH MEDIAN DITCH CHECK
280001-07	TEMPORARY EROSION CONTROL SYSTEMS
420001-10	PAVEMENT JOINTS
420401-13	PAVEMENT CONNECTOR (PCC) FOR BRIDGE APPROACH SLAB
515001-04	NAME PLATE FOR BRIDGES
601001-05	PIPE UNDERDRAINS
601101-02	CONCRETE HEADWALL FOR PIPE UNDERDRAINS
630001-13	STEEL PLATE BEAM GUARDRAIL
630201-07	PCC/HMA STABILIZATION AT STEEL PLATE BEAM GUARDRAIL
630301-09	SHOULDER WIDENING FOR TYPE 1 (SPECIAL) GUARDRAIL TERMINALS
631031-18	TRAFFIC BARRIER TERMINAL, TYPE 6
635001-02	DELINEATORS
642001-03	SHOULDER RUMBLE STRIP 16 IN.
701101-05	OFF-ROAD OPERATIONS, MULTILANE, 15' (4.5 M) TO 24" (600 MM) FROM PAVEMENT EDGE
701106-02	OFF-ROAD OPERATIONS, MULTILANE, MORE THAN 15' (4.5 M) AWAY
701400-12	APPROACH TO LANE CLOSURE, FREEWAY/EXPRESSWAY
701402-12	LANE CLOSURE, FREEWAY/EXPRESSWAY, WITH BARRIER
701406-13	LANE CLOSURE, FREEWAY/EXPRESSWAY, DAY OPERATIONS ONLY
701411-09	LANE CLOSURE, MULTILANE, AT ENTRANCE OR EXIT RAMP, FOR SPEEDS >= 45 MPH
701426-09	LANE CLOSURE, MULTILANE, INTERMITTENT OR MOVING OPERATION, FOR SPEEDS >= 45 MPH
701428-01	TRAFFIC CONTROL SETUP AND REMOVAL FREEWAY/EXPRESSWAY
701901-10	TRAFFIC CONTROL DEVICES
704001-08	TEMPORARY CONCRETE BARRIER
725001-01	OBJECT AND TERMINAL MARKERS
780001-05	TYPICAL PAVEMENT MARKINGS
781001-04	TYPICAL APPLICATIONS RAISED REFLECTIVE PAVEMENT MARKERS
782006-01	GUARDRAIL AND BARRIER WALL REFLECTOR MOUNTING DETAILS

GENERAL NOTES

1. THE ENGINEER WILL BE THE SOLE JUDGE CONCERNING CURING TIME FOR THE VARIOUS HMA LIFTS.
2. ALL ELEVATIONS REFERRING TO U.S.G.S. MEAN SEA LEVEL DATUM.
3. THE FOLLOWING RATES OF APPLICATION HAVE BEEN USED IN CALCULATING PLAN QUANTITIES:

GRANULAR MATERIALS	2.05	TONS / CU YD
HMA RESURFACING	112	LBS / SQ YD / IN
SHORT TERM PAVEMENT MARKING	10	FT / 100 FT OF APPLICATION

4. THE CONTRACTOR SHALL CONTACT JULIE AT LEAST 48 HOURS PRIOR TO EXCAVATION TO DETERMINE WHICH UTILITIES ARE IN THE AREA.
5. THE CONTRACTOR IS RESPONSIBLE FOR REPAIRING ANY TURF THEIR CONSTRUCTION ACTIVITIES MAY CAUSE, AT NO ADDITIONAL COMPENSATION.

COMMITMENTS

NONE.

BRIAN S. HEIL
062-054934
LICENSED PROFESSIONAL ENGINEER OF ILLINOIS

Signed: Brian Heil
Date: 3/21/2025
License Expires: 11/30/2025

The seal shown above is valid for Sheets 1-33 and 71-84.

LICENSED STRUCTURAL ENGINEER
ALEX C BENZ
081-007814
STATE OF ILLINOIS

Signed: Alex C. Benz
Date: 3/21/2025
License Expires: 11/30/2026

The seal shown above is valid for Sheets 34-70.

STATE OF ILLINOIS
DEPARTMENT OF TRANSPORTATION
DISTRICT THREE
AS BUILT INFORMATION

SUPERVISING CONSTRUCTION FIELD ENGINEER

RESIDENT ENGINEER / TECHNICIAN

START & END DATES OF CONSTRUCTION:

INSPECTORS:

MIXTURES TABLE

LOCATION(S):	I-57	I-57	I-57	I-57
MIXTURE USE(S):	SMA SURFACE COURSE	HMA BINDER VAR. DEPTH	HMA SHOULDER SURFACE	FILL EXIST RUMBLE STRIP
PG:	SBS PG 76-28	SBS PG 76-28	PG 64-22	PG 64-22
DESIGN AIR VOIDS:	4.0% @ Ndes=80	4.0% @ Ndes=50	4.0% @ Ndes=70	4.0% @ Ndes=70
MIXTURE COMPOSITION:	IL 12.5	IL 4.75	IL 9.5	IL 9.5
FRICTION AGG:	MIXTURE E	N/A	MIXTURE D	N/A
MIXTURE WEIGHT:	112.0 LB/SQ YD/IN	112.0 LB/SQ YD/IN	112.0 LB/SQ YD/IN	112.0 LB/SQ YD/IN
QUALITY MANAGEMENT PROGRAM:	QC/QA	QC/QA	QC/QA	QC/QA
SUBLOT SIZE:	N/A	N/A	N/A	N/A
DENSITY TEST METHOD:	CORES/NUCLEAR	CORES/NUCLEAR	CORES/NUCLEAR	SATISFACTION OF ENGINEER
MATERIAL TRANSFER DEVICE (REQUIRED?)	NO	NO	NO	NO

CODE NO.	ITEM	UNIT	TOTAL QUANTITY	CONSTRUCTION CODE IROQUOIS COUNTY SN 038-0229/0230 0013 100% STATE
20200100	EARTH EXCAVATION	CU YD	25	25
28000305	TEMPORARY DITCH CHECKS	FOOT	135	135
28000400	PERIMETER EROSION BARRIER	FOOT	725	725
28000500	INLET AND PIPE PROTECTION	EACH	2	2
28100107	STONE RIPRAP, CLASS A4	SQ YD	1,988	1,988
28200200	FILTER FABRIC	SQ YD	1,988	1,988
40600290	BITUMINOUS MATERIALS (TACK COAT)	POUND	3,413	3,413
40600370	LONGITUDINAL JOINT SEALANT	FOOT	1,763	1,763
40600990	TEMPORARY RAMP	SQ YD	162	162
40603200	POLYMERIZED HOT-MIX ASPHALT BINDER COURSE, IL-4.75, N50	TON	27	27
40604062	HOT-MIX ASPHALT SURFACE COURSE, IL-9.5, MIX "D", N70	TON	529	529
40605034	POLYMERIZED HOT-MIX ASPHALT SURFACE COURSE, STONE MATRIX ASPHALT, 12.5, MIX	TON	549	549
42000080	PAVEMENT CONNECTOR (PCC) FOR BRIDGE APPROACH SLAB	SQ YD	336	336
44000100	PAVEMENT REMOVAL	SQ YD	336	336

NOTES: * = SPECIALTY ITEM

MODEL: SOQ Sheets [Sheet]
FILE NAME: H:\P222101 - D3 V-VWO 13 - I-57 over Louis Creek-PSE\CADD\Microstation\CADD Sheets\D368M23-sht-SOQ.dgn

OATES ASSOCIATES
www.oatesassociates.com
ILLINOIS DESIGN FIRM LICENSE NO.: 184.001115

USER NAME = breanna.frahm	DESIGNED -	REVISED -
	DRAWN -	REVISED -
	CHECKED -	REVISED -
PLOT DATE = 3/20/2025	DATE -	REVISED -

STATE OF ILLINOIS
DEPARTMENT OF TRANSPORTATION

SUMMARY OF QUANTITIES

SCALE: | SHEET 1 OF 6 SHEETS | STA. TO STA.

F.A.I. RTE.	SECTION	COUNTY	TOTAL SHEETS	SHEET NO.
57	((38-7B)BR)BR	IROQUOIS	84	3

CONTRACT NO. 66M23

ILLINOIS | FED. AID PROJECT

REV. 4/7/25

CODE NO.	ITEM	UNIT	TOTAL QUANTITY	CONSTRUCTION CODE IROQUOIS COUNTY SN 038-0229/0230 0013 100% STATE
44000157	HOT-MIX ASPHALT SURFACE REMOVAL, 2"	SQ YD	732	732
48102100	AGGREGATE WEDGE SHOULDER, TYPE B	TON	87	87
50100100	REMOVAL OF EXISTING STRUCTURES	EACH	2	2
50200100	STRUCTURE EXCAVATION	CU YD	191	191
50200300	COFFERDAM EXCAVATION	CU YD	360	360
50201101	COFFERDAM (TYPE 1) (LOCATION - 1)	EACH	1	1
50201102	COFFERDAM (TYPE 1) (LOCATION - 2)	EACH	1	1
50201103	COFFERDAM (TYPE 1) (LOCATION - 3)	EACH	1	1
50201104	COFFERDAM (TYPE 1) (LOCATION - 4)	EACH	1	1
50300100	FLOOR DRAINS	EACH	12	12
50300225	CONCRETE STRUCTURES	CU YD	444.8	444.8
50300255	CONCRETE SUPERSTRUCTURE	CU YD	394.4	394.4
50300300	PROTECTIVE COAT	SQ YD	1,458	1,458
50301350	CONCRETE SUPERSTRUCTURE (APPROACH SLAB)	CU YD	234.0	234.0

NOTES: * = SPECIALTY ITEM

				CONSTRUCTION CODE
				IROQUOIS COUNTY
CODE NO.	ITEM	UNIT	TOTAL QUANTITY	SN 038-0229/0230 0013 100% STATE
50800205	REINFORCEMENT BARS, EPOXY COATED	POUND	251,200	251,200
50800515	BAR SPLICERS	EACH	1,198	1,198
51200958	FURNISHING METAL SHELL PILES 14" X 0.250"	FOOT	1,871	1,871
51202305	DRIVING PILES	FOOT	1,871	1,871
51203200	TEST PILE METAL SHELLS	EACH	8	8
51204650	PILE SHOES	EACH	52	52
51500100	NAME PLATES	EACH	2	2
52200020	TEMPORARY SOIL RETENTION SYSTEM	SQ FT	209	209
58600101	GRANULAR BACKFILL FOR STRUCTURES	CU YD	128	128
59100100	GEOCOMPOSITE WALL DRAIN	SQ YD	89	89
60100060	CONCRETE HEADWALLS FOR PIPE DRAINS	EACH	4	4
60146304	PIPE UNDERDRAINS FOR STRUCTURES 4"	FOOT	268	268
* 63000001	STEEL PLATE BEAM GUARDRAIL, TYPE A, 6 FOOT POSTS	FOOT	1,126	1,126
* 63100085	TRAFFIC BARRIER TERMINAL, TYPE 6	EACH	4	4

NOTES: * = SPECIALTY ITEM

MODEL: SOQ Sheets-2 [Sheet]
FILE NAME: H:\P222101 - D3 V-V\WO 13 - I-57 over Louis Creek-PSE\CADD\Microstation\CADD Sheets\D366M23-sht-SOQ.dgn

OATES ASSOCIATES
www.oatesassociates.com
ILLINOIS DESIGN FIRM LICENSE NO.: 184.001115

USER NAME = breanna.frahm	DESIGNED -	REVISED -	
	DRAWN -	REVISED -	
	CHECKED -	REVISED -	
PLOT DATE = 3/20/2025	DATE -	REVISED -	

STATE OF ILLINOIS
DEPARTMENT OF TRANSPORTATION

SUMMARY OF QUANTITIES

SCALE: | SHEET 3 OF 6 SHEETS | STA. TO STA.

F.A.I. RTE.	SECTION	COUNTY	TOTAL SHEETS	SHEET NO.
57	((38-7B)BR)BR	IROQUOIS	84	5
		CONTRACT NO. 66M23		
		ILLINOIS	FED. AID PROJECT	

REV. 4/7/25

	CODE NO.	ITEM	UNIT	TOTAL QUANTITY	CONSTRUCTION CODE IROQUOIS COUNTY SN 038-0229/0230 0013 100% STATE
*	63100167	TRAFFIC BARRIER TERMINAL, TYPE 1 (SPECIAL) TANGENT	EACH	4	4
	63200310	GUARDRAIL REMOVAL	FOOT	1,351	1,351
	63500105	DELINEATORS	EACH	4	4
	64200116	SHOULDER RUMBLE STRIPS, 16 INCH	FOOT	2,278	2,278
	67000400	ENGINEER'S FIELD OFFICE, TYPE A	CAL MO	16	16
	67100100	MOBILIZATION	L SUM	1	1
	70100420	TRAFFIC CONTROL AND PROTECTION, STANDARD 701411	EACH	1	1
	70100700	TRAFFIC CONTROL AND PROTECTION, STANDARD 701406	L SUM	1	1
	70103815	TRAFFIC CONTROL SURVEILLANCE	CAL DA	20	20
	70106700	TEMPORARY RUMBLE STRIPS	EACH	8	8
	70107025	CHANGEABLE MESSAGE SIGN	CAL DA	28	28
	70300100	SHORT TERM PAVEMENT MARKING	FOOT	1,126	1,126
	70300150	SHORT TERM PAVEMENT MARKING REMOVAL	SQ FT	188	188
	70307120	TEMPORARY PAVEMENT MARKING - LINE 4" - TYPE IV TAPE	FOOT	10,862	10,862

* = SPECIALTY ITEM

	CODE NO.	ITEM	UNIT	TOTAL QUANTITY	CONSTRUCTION CODE IROQUOIS COUNTY SN 038-0229/0230 0013 100% STATE
	70400100	TEMPORARY CONCRETE BARRIER	FOOT	800	800
	70400125	PINNING TEMPORARY CONCRETE BARRIER	EACH	720	720
	70400200	RELOCATE TEMPORARY CONCRETE BARRIER	FOOT	700	700
	70600250	IMPACT ATTENUATORS, TEMPORARY (NON- REDIRECTIVE), TEST LEVEL 3	EACH	2	2
	70600350	IMPACT ATTENUATORS, RELOCATE (NON- REDIRECTIVE), TEST LEVEL 3	EACH	2	2
*	72501000	TERMINAL MARKER - DIRECT APPLIED	EACH	4	4
*	78004645	PREFORMED PLASTIC PAVEMENT MARKING, TYPE D - STANDARD - LINE 9"	FOOT	1,191	1,191
*	78005130	EPOXY PAVEMENT MARKING - LINE 6"	FOOT	4,240	4,240
*	78011035	GROOVING FOR RECESSED PAVEMENT MARKING 7"	FOOT	5,430	5,430
*	78011050	GROOVING FOR RECESSED PAVEMENT MARKING 10"	FOOT	1,191	1,191
*	78100100	RAISED REFLECTIVE PAVEMENT MARKER	EACH	118	118
*	78200005	GUARDRAIL REFLECTORS, TYPE A	EACH	18	18
	78300200	RAISED REFLECTIVE PAVEMENT MARKER REMOVAL	EACH	119	119
	78300202	PAVEMENT MARKING REMOVAL - WATER BLASTING	SQ FT	1,811	1,811

* = SPECIALTY ITEM

MODEL: SOQ Sheets-4 [Sheet]
FILE NAME: H:\P222101 - D3 V-V\WO 13 - I-57 over Louis Creek-PSE\CADD\Microstation\CADD Sheets\D366M23-sht-SOQ.dgn

OATES ASSOCIATES
www.oatesassociates.com
ILLINOIS DESIGN FIRM LICENSE NO.: 184.001115

USER NAME = breanna.frahm	DESIGNED -	REVISED -
	DRAWN -	REVISED -
	CHECKED -	REVISED -
PLOT DATE = 3/20/2025	DATE -	REVISED -

STATE OF ILLINOIS
DEPARTMENT OF TRANSPORTATION

SUMMARY OF QUANITIES

SCALE: | SHEET 5 OF 6 SHEETS | STA. TO STA.

F.A.I. RTE.	SECTION	COUNTY	TOTAL SHEETS	SHEET NO.
57	((38-7B)BR)BR	IROQUOIS	84	7

CONTRACT NO. 66M23

ILLINOIS | FED. AID PROJECT

REV. 5/9/25REV. 4/7/25

CODE NO.	ITEM	UNIT	TOTAL QUANTITY	CONSTRUCTION CODE IROQUOIS COUNTY SN 038-0229/0230 0013 100% STATE
X4062952	HOT-MIX ASPHALT STABILIZATION 6" AT STEEL PLATE BEAM GUARD RAIL	SQ YD	442	442
X4401198	HOT-MIX ASPHALT SURFACE REMOVAL, VARIABLE DEPTH	SQ YD	7,644	7,644
X5030250	BRIDGE DECK GROOVING (LONGITUDINAL)	SQ YD	738	738
X6350204	LINEAR DELINEATOR PANELS, 4 INCH	EACH	18	18
X6350206	LINEAR DELINEATOR PANELS, 6 INCH	EACH	8	8
X7010216	TRAFFIC CONTROL AND PROTECTION, (SPECIAL)	L SUM	1	1
X7010239	CHANGEABLE MESSAGE SIGN (SPECIAL)	CAL WK	512	512
X7011858	REAL-TIME TRAFFIC CONTROL SENSOR UNIT	WEEK	320	320
X8570002	SMART TRAFFIC MONITORING SYSTEM	CAL WK	64	64
X8570004	SMART TRAFFIC MONITORING DEVICE	CAL WK	320	320
Z0013798	CONSTRUCTION LAYOUT	L SUM	1	1
Z0029090	DIAMOND GRINDING (BRIDGE SECTION)	SQ YD	1,108	1,108
Ø Z0076604	TRAINEES - TRAINING PROGRAM GRADUATE	HOUR	1,000	1,000

Ø 0042

* = SPECIALTY ITEM

MODEL: SOQ Sheets-5 [Sheet]
FILE NAME: H:\P222101 - D3 V-A\WO 13 - I-57 over Louis Creek-PSE\CADD\Microstation\CADD Sheets\D366M23-sht-SOQ.dgn

OATES ASSOCIATES
www.oatesassociates.com
ILLINOIS DESIGN FIRM LICENSE NO.: 184.001115

USER NAME = breanna.frahm	DESIGNED -	REVISED -
	DRAWN -	REVISED -
	CHECKED -	REVISED -
PLOT DATE = 3/20/2025	DATE -	REVISED -

STATE OF ILLINOIS
DEPARTMENT OF TRANSPORTATION

SUMMARY OF QUANTITIES

SCALE: | SHEET 6 OF 6 SHEETS | STA. TO STA.

F.A.I. RTE.	SECTION	COUNTY	TOTAL SHEETS	SHEET NO.
57	((38-7B)BR)BR	IROQUOIS	84	8

CONTRACT NO. 66M23

ILLINOIS | FED. AID PROJECT

REV. 5/9/25 REV. 4/23/25 REV. 4/7/25

SUPERELEVATION TRANSITION TABLES

NORTHBOUND I-57					
STATION (NB)	LT EDGE EOP	CROSS SLOPE	CL ELEV	CROSS SLOPE	PROFILE GRADE
1179+00	684.33	-2.30%	684.06	-2.30%	683.78
1179+50	684.54	-3.40%	684.13	-3.40%	683.73
1179+75	684.51	-3.40%	684.10	-3.40%	683.70
1180+00	684.35	-2.85%	684.01	-2.85%	683.67
1180+25	684.22	-2.30%	683.95	-2.30%	683.67
1180+50	684.09	-1.74%	683.88	-1.74%	683.67
1180+61	684.08	-1.50%	683.90	-1.50%	683.72
1180+75	684.00	-1.19%	683.86	-1.50%	683.68
1181+00	683.94	-0.64%	683.86	-1.50%	683.68
1181+25	683.89	-0.09%	683.88	-1.50%	683.70
1181+29	683.88	0.00%	683.88	-1.50%	683.70
1181+50	683.83	0.48%	683.89	-1.50%	683.71
1181+75	683.78	1.05%	683.91	-1.50%	683.73
1181+95	683.75	1.50%	683.93	-1.50%	683.75

SOUTHBOUND I-57					
STATION (SB)	PROFILE GRADE	CROSS SLOPE	CL ELEV	CROSS SLOPE	RT EDGE EOP
1179+00	684.52	-2.30%	684.25	-2.30%	683.97
1179+50	684.41	-3.40%	684.00	-3.40%	683.59
1179+75	684.36	-3.40%	683.95	-3.40%	683.54
1180+00	684.31	-2.85%	683.97	-2.85%	683.62
1180+25	684.20	-2.30%	683.93	-2.30%	683.65
1180+50	684.10	-1.74%	683.89	-1.74%	683.68
1180+61	684.06	-1.50%	683.88	-1.50%	683.70
1180+75	684.02	-1.19%	683.88	-1.50%	683.70
1181+00	683.95	-0.64%	683.88	-1.50%	683.70
1181+25	683.90	-0.09%	683.89	-1.50%	683.71
1181+29	683.89	0.00%	683.89	-1.50%	683.71
1181+50	683.86	0.48%	683.92	-1.50%	683.74
1181+75	683.84	1.05%	683.96	-1.50%	683.78
1181+95	683.83	1.50%	684.01	-1.50%	683.83

TYPICAL SECTIONS LEGEND

1. EXISTING HMA SURFACE, 4" TO 5"
2. EXISTING CRC PAVEMENT, 8"
3. EXISTING AGGREGATE SHOULDER
4. EXISTING HMA SHOULDER
5. EXISTING STABILIZED SUBBASE, 4" (BAM)
6. EXISTING 4" PIPE UNDERDRAIN

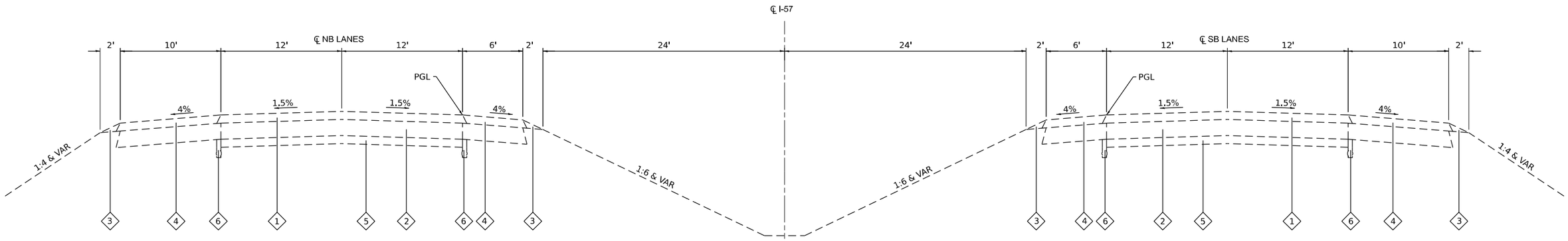

EXISTING TYPICAL SECTION

STA 1180+40 TO STA 1183+33
STA 1190+67 TO STA 1191+00

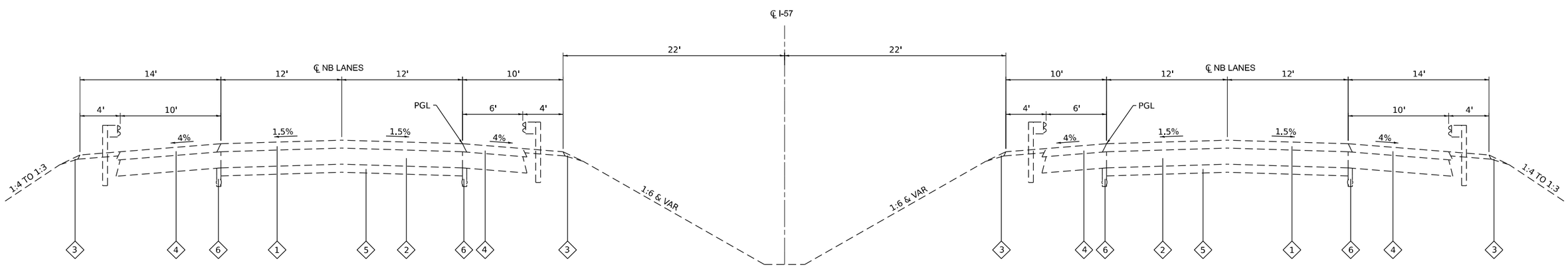

EXISTING TYPICAL SECTION

STA 1183+33 TO STA 1190+67
BRIDGE OMISSION
NB: STA 1186+01 TO STA 1187+80
SB: STA 1186+18 TO STA 1187+96

MODEL: Typical Sections [Sheet]
FILE NAME: H:\P222101 - D3 VA\WO 13 - I-57 over Louis Creek-PSE\CADD\Microstation\CADD Sheets\D368M23-sht-typical.dgn

OATES ASSOCIATES
www.oatesassociates.com
ILLINOIS DESIGN FIRM LICENSE NO.: 184.001115

USER NAME = breanna.frahm	DESIGNED -	REVISED -
	DRAWN -	REVISED -
	CHECKED -	REVISED -
PLOT DATE = 3/20/2025	DATE -	REVISED -

STATE OF ILLINOIS
DEPARTMENT OF TRANSPORTATION

TYPICAL SECTIONS

SCALE: | SHEET 1 OF 3 SHEETS | STA. | TO STA.

F.A.I. RTE.	SECTION	COUNTY	TOTAL SHEETS	SHEET NO.
57	((38-7B)BR)BR	IROQUOIS	84	9

CONTRACT NO. 66M23

ILLINOIS | FED. AID PROJECT

TYPICAL SECTIONS LEGEND

1. EXISTING HMA SURFACE, 4" TO 5"
2. EXISTING CRC PAVEMENT, 8"
3. EXISTING AGGREGATE SHOULDER
4. EXISTING HMA SHOULDER
5. EXISTING STABILIZED SUBBASE, 4" (BAM)
6. EXISTING 4" PIPE UNDERDRAIN
7. PROPOSED HMA SURFACE REMOVAL, VARIABLE DEPTH
8. PROPOSED POLYMERIZED HMA SURFACE COURSE, SMA, IL 12.5, MIX "E", N80, 2"
9. PROPOSED HMA SURFACE COURSE, IL 9.5, MIX "D", N70, 2"
10. PROPOSED BITUMINOUS MATERIALS TACK COAT
11. PROPOSED AGGREGATE SHOULDER WEDGE
12. PROPOSED POLYMERIZED HMA BINDER COURSE, IL 4.75, N50, (INCL SHOULDERS)
13. PROPOSED SHOULDER RUMBLE STRIPS, 16"
14. PROPOSED LONGITUDINAL JOINT SEALANT

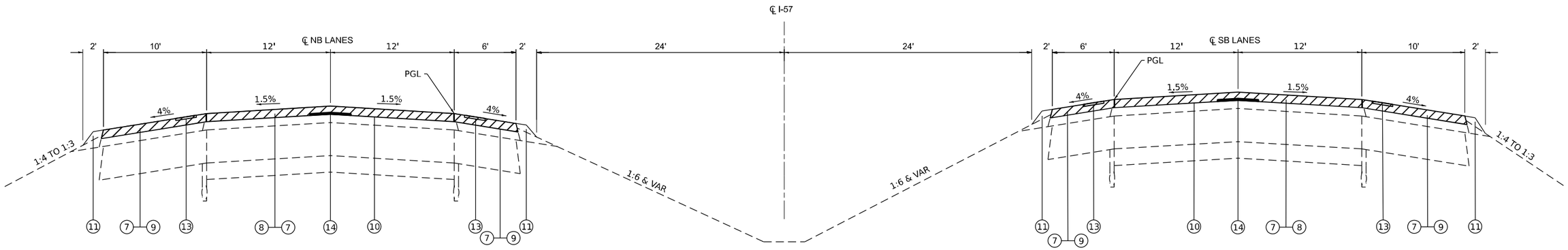

PROPOSED TYPICAL SECTION

STA 1180+40 TO STA 1181+87
STA 1182+53 TO STA 1182+70

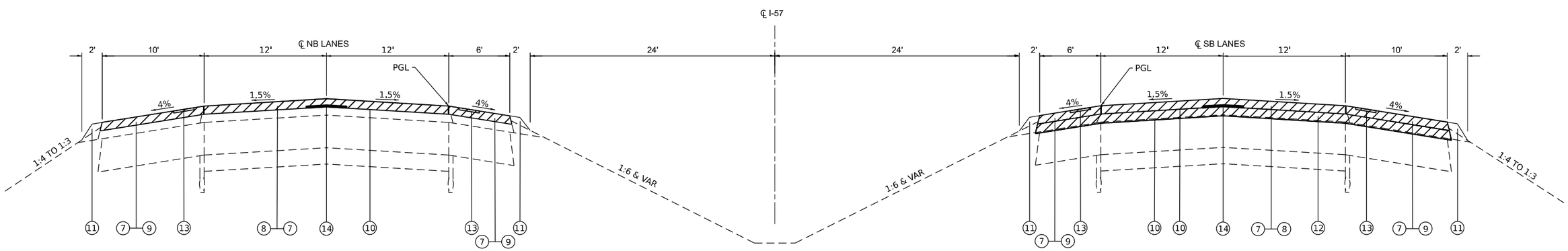

PROPOSED TYPICAL SECTION

STA 1181+87 TO STA 1182+53

MODEL: Typical Sections-1 [Sheet]
FILE NAME: H:\P222101 - D3 VA\WO 13 - I-57 over Louis Creek-PSE\CADD\Microstation\CADD Sheets\D386W23-sht-typical.dgn

OATES ASSOCIATES
www.oatesassociates.com
ILLINOIS DESIGN FIRM LICENSE NO.: 184.001115

USER NAME = breanna.frahm	DESIGNED -	REVISED -	
	DRAWN -	REVISED -	
	CHECKED -	REVISED -	
PLOT DATE = 3/20/2025	DATE -	REVISED -	

STATE OF ILLINOIS
DEPARTMENT OF TRANSPORTATION

TYPICAL SECTIONS

SCALE: | SHEET 2 OF 3 SHEETS | STA. | TO STA.

F.A.I. RTE.	SECTION	COUNTY	TOTAL SHEETS	SHEET NO.
57	((38-7B)BR)BR	IROQUOIS	84	10
		CONTRACT NO. 66M23		
		ILLINOIS	FED. AID PROJECT	

NOTES

1. GUARDRAIL FROM STA. 1185+42 TO STA. 1190+57 LT
2. GUARDRAIL FROM STA. 1185+49 TO STA. 1191+27 RT
3. GUARDRAIL FROM STA. 1182+70 TO STA. 1188+48 LT
4. GUARDRAIL FROM STA. 1183+40 TO STA. 1188+56 RT

TYPICAL SECTIONS LEGEND

1. EXISTING HMA SURFACE, 4" TO 5"
2. EXISTING CRC PAVEMENT, 8"
3. EXISTING AGGREGATE SHOULDER
4. EXISTING HMA SHOULDER
5. EXISTING STABILIZED SUBBASE, 4" (BAM)
6. EXISTING 4" PIPE UNDERDRAIN
7. PROPOSED HMA SURFACE REMOVAL, VARIABLE DEPTH
8. PROPOSED POLYMERIZED HMA SURFACE COURSE, SMA, IL 12.5, MIX "E", N80, 2"
9. PROPOSED HMA SURFACE COURSE, IL 9.5, MIX "D", N70, 2"
10. PROPOSED BITUMINOUS MATERIALS TACK COAT
11. PROPOSED AGGREGATE SHOULDER WEDGE
12. PROPOSED POLYMERIZED HMA BINDER COURSE, IL 4.75, N50, (INCL SHOULDERS)
13. PROPOSED SHOULDER RUMBLE STRIPS, 16"
14. PROPOSED LONGITUDINAL JOINT SEALANT
15. PROPOSED HOT-MIX ASPHALT STABILIZATION AT GUARDRAIL, 6"

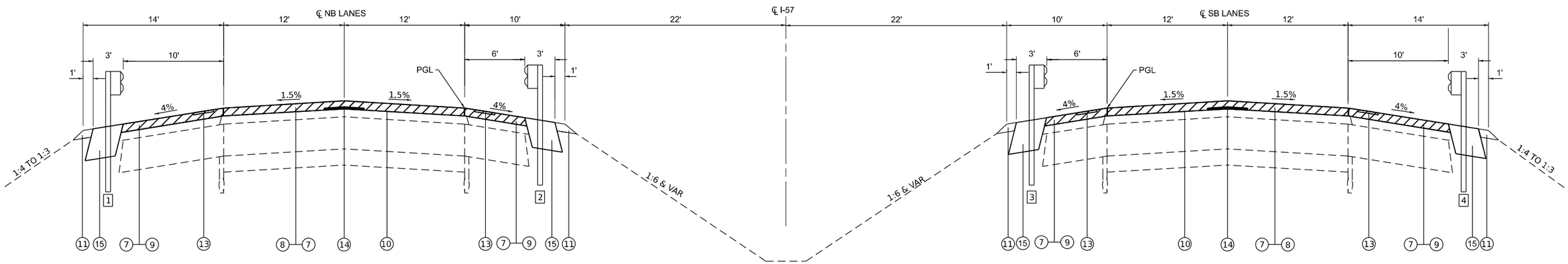

PROPOSED TYPICAL SECTION

STA 1182+70 TO STA 1185+00
STA 1187+80 TO STA 1191+00
BRIDGE OMISSION
NB: STA 1186+01 TO STA 1187+80
SB: STA 1186+18 TO STA 1187+96

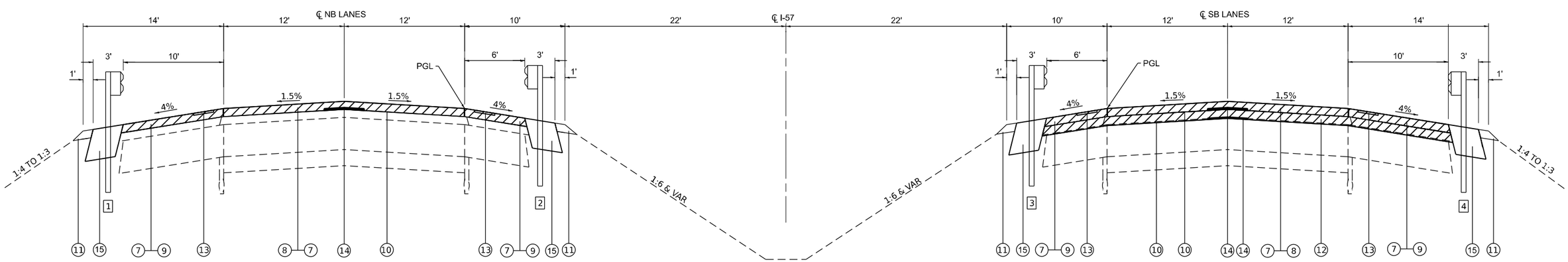

PROPOSED TYPICAL SECTION

STA 1185+00 TO STA 1186+18
BRIDGE OMISSION
NB: STA 1186+01 TO STA 1187+80
SB: STA 1186+18 TO STA 1187+96

MODEL: Typical Sections-4 [Sheet]
FILE NAME: H:\P222101 - D3 VA\WO 13 - I-57 over Louis Creek-PSE\CADD\Microstation\CADD Sheets\D368M23-sht-typical.dgn

OATES ASSOCIATES
www.oatesassociates.com
ILLINOIS DESIGN FIRM LICENSE NO.: 184.001115

USER NAME = breanna.frahm	DESIGNED -	REVISED -
	DRAWN -	REVISED -
	CHECKED -	REVISED -
PLOT DATE = 3/21/2025	DATE -	REVISED -

STATE OF ILLINOIS
DEPARTMENT OF TRANSPORTATION

TYPICAL SECTIONS

SCALE: | SHEET 3 OF 3 SHEETS | STA. | TO STA.

F.A.I. RTE.	SECTION	COUNTY	TOTAL SHEETS	SHEET NO.
57	((38-7B)BR)BR	IROQUOIS	84	11

CONTRACT NO. 66M23

ILLINOIS | FED. AID PROJECT

EARTHWORK

STATION	STATION	EARTH EXCAVATION (CU YD)
1182+70	1186+33	6
1183+40	1186+40	6
1187+57	1190+52	6
1187+64	1191+27	7
TOTAL		25

PAVEMENT

STATION	STATION	OFFSET	BIT MATLS TACK CT (POUND)	LONG JOINT SEALANT (FOOT)	TEMPORARY RAMP (SQ YD)	P HMA BC IL-4.75 N 50 (TON)	HMA SC IL-9.5 D N70 (TON)	P SC SMA 12.5 E N80 (TON)	PVT CON PCC BR APP SL (SQ YD)	PAVEMENT REM (SQ YD)	HMA SURF REM 2 (SQ YD)	AGG WEDGE SHLD TYPE B (TON)	SHOULDER RUM STRIP 16 (FOOT)	HMA STAB 6IN AT SPBGR (SQ YD)	HMA SURF REM VAR DP (SQ YD)	NOTES
1180+40	1180+47	RT			19											
1180+40	1180+47	LT			19											
1180+40	1186+01	LT	1,146	561			112	173					1,122		2,489	
1180+40	1186+01	LT					42									Rumble Strip
1180+40	1186+17	LT										14				
1180+40	1186+18	RT	1,271	578			138	178					1,156		2,489	
1180+40	1186+18	RT					44									Rumble Strip
1180+40	1186+24	LT										14				
1180+40	1186+33	RT										14				
1180+40	1186+40	RT										14				
1181+87	1182+53	RT				8										
1182+70	1186+33	+												121		
1183+39	1186+39	+												100		
1183+50	1186+18	RT									119					
1184+20	1186+18	RT									88					
1184+25	1186+01	LT									156					
1185+00	1185+50	RT				6										
1185+50	1186+18	RT				13										
1185+98	1186+01	RT			6											
1185+98	1186+01	LT			7											
1186+01	1186+24	LT							84	84						
1186+09	1186+18	RT			18											
1186+09	1186+18	LT			21											
1186+18	1186+40	RT							84	84						
1187+57	1187+80	LT							84	84						
1187+57	1190+57	+												100		
1187+57	1191+00	LT										8				
1187+64	1191+00	LT										8				
1187+64	1191+27	+												121		
1187+73	1187+96	RT							84	84						
1187+73	1191+00	RT										8				
1187+80	1187+84	RT			8											
1187+80	1187+84	LT			9											
1187+80	1189+80	LT									89					
1187+80	1190+50	LT									120					
1187+80	1191+00	LT	753	320			86	101							1,333	
1187+80	1191+00	LT					24									Rumble Strip
1187+81	1191+00	RT										7				
1187+96	1188+00	RT			8											
1187+96	1188+00	LT			9											
1187+96	1189+75	RT									160					
1187+96	1191+00	RT	243	304			61	97							1,333	
1187+96	1191+00	RT					22									Rumble Strip
1190+93	1191+00	RT			19											
1190+93	1191+00	LT			19											
TOTAL			3,413	1,763	162	27	529	549	336	336	732	87	2,278	442	7,644	

PAVEMENT NOTES:

1. APPLICATION RATES USED FOR QUANTITY ESTIMATES ARE AS FOLLOWS:
   HOT-MIX ASPHALT: 112 LBS/SY/INCH THICKNESS
2. THE PROPOSED SURFACE COURSE SHALL BE 2 IN. THICK.

MODEL: Schedule [Sheet]
FILE NAME: H:\P222101 - D3 VA\WO 13 - I-57 over Louis Creek-PSE\CADD\Microstation\CADD Sheets\D366M23-sht-SOQ.dgn

OATES ASSOCIATES
www.oatesassociates.com
ILLINOIS DESIGN FIRM LICENSE NO.: 184.001115

USER NAME = breanna.frahm	DESIGNED -	REVISED -
	DRAWN -	REVISED -
	CHECKED -	REVISED -
PLOT DATE = 3/20/2025	DATE -	REVISED -

STATE OF ILLINOIS
DEPARTMENT OF TRANSPORTATION

SCHEDULE

SCALE: | SHEET 1 OF 3 SHEETS | STA. TO STA.

F.A.I. RTE.	SECTION	COUNTY	TOTAL SHEETS	SHEET NO.
57	((38-7B)BR)BR	IROQUOIS	84	12
		CONTRACT NO. 66M23		
		ILLINOIS	FED. AID PROJECT	

VARIABLE DEPTH MILLING TABLE

NORTHBOUND I-57				
STATION	PROP PGL ELEV	EXIST PGL ELEV	PGL RAISE (FT)	DEPTH OF MILLING AT PGL (IN)
1180+50	683.67	683.67	0.00	2
1181+00	683.68	683.68	0.00	2
1181+50	683.71	683.71	0.00	2
1182+00	683.75	683.75	0.00	2
1182+50	683.75	683.75	0.00	2
1183+00	683.87	683.87	0.00	2
1183+50	684.05	684.05	0.00	2
1184+00	684.26	684.24	0.02	1 3/4
1184+50	684.47	684.48	-0.01	2
1185+00	684.68	684.64	0.04	1 1/2
1185+50	684.89	684.82	0.07	1 1/4
1186+00	685.10	685.00	0.10	3/4
BRIDGE OMISSION				
1188+00	685.94	685.87	0.07	1 1/4
1188+50	686.15	686.05	0.10	3/4
1189+00	686.36	686.24	0.12	1/2
1189+50	686.57	686.51	0.06	1 1/4
1190+00	686.78	686.72	0.06	1 1/4
1190+50	686.95	686.95	0.00	2
1191+00	687.19	687.19	0.00	2

SOUTHBOUND I-57					
STATION	PROP PGL ELEV	EXIST PGL ELEV	PGL RAISE (FT)	DEPTH OF MILLING AT PGL (IN)	DEPTH OF LEVELING BINDER (IN)
1180+50	684.10	684.10	0.00	2	0
1181+00	683.95	683.90	0.05	1 1/2	0
1181+50	683.86	683.77	0.09	1	0
1182+00	683.83	683.63	0.20	0	1/2
1182+50	683.85	683.68	0.17	0	0
1183+00	683.93	683.83	0.10	3/4	0
1183+50	684.07	684.00	0.07	1 1/4	0
1184+00	684.26	684.17	0.09	1	0
1184+50	684.47	684.39	0.08	1	0
1185+00	684.68	684.52	0.16	0	0
1185+50	684.89	684.68	0.21	0	1/2
1186+00	685.10	684.87	0.23	0	3/4
BRIDGE OMISSION					
1188+00	685.94	685.83	0.11	3/4	0
1188+50	686.15	686.10	0.05	1 1/2	0
1189+00	686.47	686.47	0.00	2	0
1189+50	686.71	686.71	0.00	2	0
1190+00	686.87	686.87	0.00	2	0
1190+50	687.09	687.09	0.00	2	0
1191+00	687.33	687.33	0.00	2	0

GUARDRAIL

STATION	STATION	OFFSET	SPBGR TY A 6FT POSTS (FOOT)	TRAF BAR TERM T6 (EACH)	TR BAR TRM T1 SPL TAN (EACH)	GUARDRAIL REMOV (FOOT)	DELINEATORS (EACH)	TERMINAL MARKER - DA (EACH)	GRDRAIL REF TYPE A (EACH)	LINEAR DELIN PANELS 4 (EACH)	LINEAR DELIN PANELS 6 (EACH)
1168+50	1205+50						4				
1182+70		RT			1			1	5	5	
1182+92	1186+48	RT				350					
1183+33	1186+50	RT				313					
1183+38		RT						1	4	4	
1183+40		RT			1						
1185+96	1186+33	RT	313								
1186+03	1186+40	RT	250								
1186+33		RT		1							
1186+40		RT		1							
1186+52		LT									1
1186+59		LT									1
1186+68		RT									1
1186+75		RT									1
1187+22		LT									1
1187+29		LT									1
1187+35	1191+02	LT				363					
1187+38		RT									1
1187+41		LT							4	4	
1187+44	1190+67	LT				325					
1187+45		RT									1
1187+48		LT							5	5	
1187+57		LT		1							
1187+64		LT		1							
1187+95	1187+57	LT	250								
1188+02	1187+64	LT	313								
1190+57		LT			1						
1190+59		LT						1			
1191+27		LT			1			1			
TOTAL			**1,126**	**4**	**4**	**1,351**	**4**	**4**	**18**	**18**	**8**

EROSION CONTROL

STATION	STATION	OFFSET	TEMP DITCH CHECKS (FOOT)	PERIMETER EROS BAR (FOOT)	INLET & PIPE PROTECT (EACH)
1181+29		CL			1
1181+53	1186+00	CL	75		
1183+32	1186+76	RT		345	
1187+21	1191+00	LT		380	
1188+00	1188+46	CL	15		
1188+58	1190+00	CL	30		
1190+00	1191+00	CL	15		
1190+00		CL			1
TOTAL			**135**	**725**	**2**

MODEL: Schedule-1 [Sheet]
FILE NAME: H:\P222101 - D3 V-V\WO 13 - I-57 over Louis Creek-PSE\CADD\Microstation\CADD Sheets\D368M23-sh-SOQ.dgn

OATES ASSOCIATES
www.oatesassociates.com
ILLINOIS DESIGN FIRM LICENSE NO.: 184.001115

USER NAME = breanna.frahm	DESIGNED -	REVISED -	
	DRAWN -	REVISED -	
	CHECKED -	REVISED -	
PLOT DATE = 3/20/2025	DATE -	REVISED -	

STATE OF ILLINOIS
DEPARTMENT OF TRANSPORTATION

SCHEDULE

SCALE: | SHEET 2 OF 3 SHEETS | STA. | TO STA.

F.A.I. RTE.	SECTION	COUNTY	TOTAL SHEETS	SHEET NO.
57	((38-7B)BR)BR	IROQUOIS	84	13

CONTRACT NO. 66M23

ILLINOIS | FED. AID PROJECT

PAVEMENT MARKING

STATION	STATION	OFFSET	COMMENT	SHORT TERM PAVT MKING (TWO APPLICATIONS) [2] (FOOT)	SHRT TRM PAVT MK REM [2] (SQ FT)	TMP PVT MK L4 T4 TAPE (TWO APPLICATIONS) (WHITE) (FOOT)	(YELLOW) (FOOT)	PREF PL PM TD STD L 9 CONTRAST 10' DASH-30' SKIP (FOOT)	EPOXY PVT MK LINE 6 (WHITE) (FOOT)	(YELLOW) (FOOT)	GRV RCSD PVT MRKG 7 [3] (FOOT)	GRV RCSD PVT MRKG 10 [3] (FOOT)	RAISED REFL PAVT MKR (EACH)	RAISED REF PVT MK REM (EACH)	PVT MKG REM WTR BLAST (SQ FT)
1168+50	1186+18	RT	SKIP DASH LINE			442		442				442	44	56	147
1180+40	1186+01	LT	WHITE LINE	49	16	561			561		561				187
1180+40	1186+01	LT	SKIP DASH LINE	56	19	140		140				140	14		47
1180+40	1186+01	LT	YELLOW LINE	49	16		561			561	561				187
1180+40	1186+18	RT	WHITE LINE	46	15	578			578		1,768				193
1180+40	1186+18	RT	SKIP DASH LINE	59	20										
1180+40	1186+18	RT	YELLOW LINE	46	15		578			578	578				193
1168+50	1191+00	LT	SKIP DASH LINE												
1180+40	1205+50	RT	SKIP DASH LINE												
1186+01	1187+80	LT	WHITE LINE	15	5	179			179		179				60
1186+01	1187+80	LT	SKIP DASH LINE	18	6	45		45				45	4		15
1186+01	1187+80	LT	YELLOW LINE	15	5		179			179	179				60
1186+18	1187+96	RT	WHITE LINE	15	5	178			178		178				59
1186+18	1187+96	RT	SKIP DASH LINE	18	6	45		45				45	4		15
1186+18	1187+96	RT	YELLOW LINE	15	5		178			178	178				59
1187+80	1191+00	LT	WHITE LINE	26	9	320			320		320				107
1187+80	1191+00	LT	YELLOW LINE	26	9		320			320	320				107
1187+80	1191+00	LT	SKIP DASH LINE	32	11										
1187+80	1205+50	LT	SKIP DASH LINE			443		443				443	44	63	148
1187+96	1191+00	RT	WHITE LINE	24	8	304			304		304				101
1187+96	1191+00	RT	SKIP DASH LINE	30	10	76		76				76	8		25
1187+96	1191+00	RT	YELLOW LINE	24	8		304			304	304				101
SUBTOTAL				**563**	**188**	**3,311**	**2,120**	**1,191**	**2,120**	**2,120**	**5,430**	**1,191**	**118**	**119**	**1,811**
TOTAL				**1,126**	**188**	**10,862**		**1,191**	**4,240**		**5,430**	**1,191**	**118**	**119**	**1,811**

NOTES:

1. SEE HIGHWAY STANDARD 780001 AND DISTRICT STANDARD 780-12 FOR PAVEMENT MARKING DETAILS.
2. APPLY TO MILLED AND FILLED SURFACE COURSES.
3. QUANTITIES INCLUDE GROOVING THROUGHOUT PROPOSED PAVEMENT MARKING LIMITS, HOWEVER IF EXISTING GROOVES EXIST, DO NOT GROOVE A NEW LINE AND SIMPLY USE THE EXISTING GROOVE.

TRAFFIC CONTROL

STATION	STATION	OFFSET	TRAF CONT-PROT 701411 (EACH)	TRAF CONT-PROT 701406 (L SUM)	TR CONT SURVEILLANCE (CAL DA)	TEMP RUMBLE STRIPS (EACH)	CHANGEABLE MESSAGE SN (CAL DA)	TEMP CONC BARRIER (FOOT)	PIN TEMP CONC BARRIER (EACH)	REL TEMP CONC BARRIER (FOOT)	IMP ATTN TEMP NRD TL3 (EACH)	IMP ATTN REL NRD TL3 (EACH)	TRAF CONT & PROT SPL (LSUM)	CHANGEABLE MSG SN SPL (CAL WK)	REAL-TIME TR CTRL SU (WEEK)	SMART TRAF MONIT SYS (CAL WK)	SMART TRAF MONIT DEV (CAL WK)	CONSTRUCTION LAYOUT (LSUM)
1168+50	1205+50		1	1	20	8	28						1	512	320	64	320	1
1184+00		RT										1						
1184+00	1188+00	RT						400	193									
1184+55		RT									1							
1186+00	1190+00	LT						400	193									
1184+55	1188+00	RT							167	350								
1186+00	1189+45	LT							167	350								
1189+45		LT									1							
1190+00		LT										1						
TOTAL			**1**	**1**	**20**	**8**	**28**	**800**	**720**	**700**	**2**	**2**	**1**	**512**	**320**	**64**	**320**	**1**

MODEL: Schedule-2 [Sheet]
FILE NAME: H:\P222101 - D3 VAVWO 13 - I-57 over Louis Creek-PSE\CADD\Microstation\CADD Sheets\D368M23-sht-SOQ.dgn

OATES ASSOCIATES
www.oatesassociates.com
ILLINOIS DESIGN FIRM LICENSE NO.: 184.001115

USER NAME = breanna.frahm	DESIGNED -	REVISED -
	DRAWN -	REVISED -
	CHECKED -	REVISED -
PLOT DATE = 3/20/2025	DATE -	REVISED -

STATE OF ILLINOIS
DEPARTMENT OF TRANSPORTATION

SCHEDULE

SCALE: | SHEET 3 OF 3 SHEETS | STA. | TO STA.

F.A.I. RTE.	SECTION	COUNTY	TOTAL SHEETS	SHEET NO.
57	((38-7B)BR)BR	IROQUOIS	84	14

CONTRACT NO. 66M23

ILLINOIS | FED. AID PROJECT

GROUND COORDINATES			
	STATION	NORTHING	EASTING
I-57			
POT	1120+00.00	1443156.865	1066033.755
PC	1123+50.13	1443152.768	1066070.820
PI	1158+89.98	1439267.642	1066129.596
PT	1180+25.48	1437546.005	1064177.855
PC	1222+60.95	1434488.948	1061544.908
PI	1246+17.35	1432788.560	1059913.556
PT	1267+31.76	1430432.449	1059950.452
POT	1275+00.00	1429664.303	1059962.481

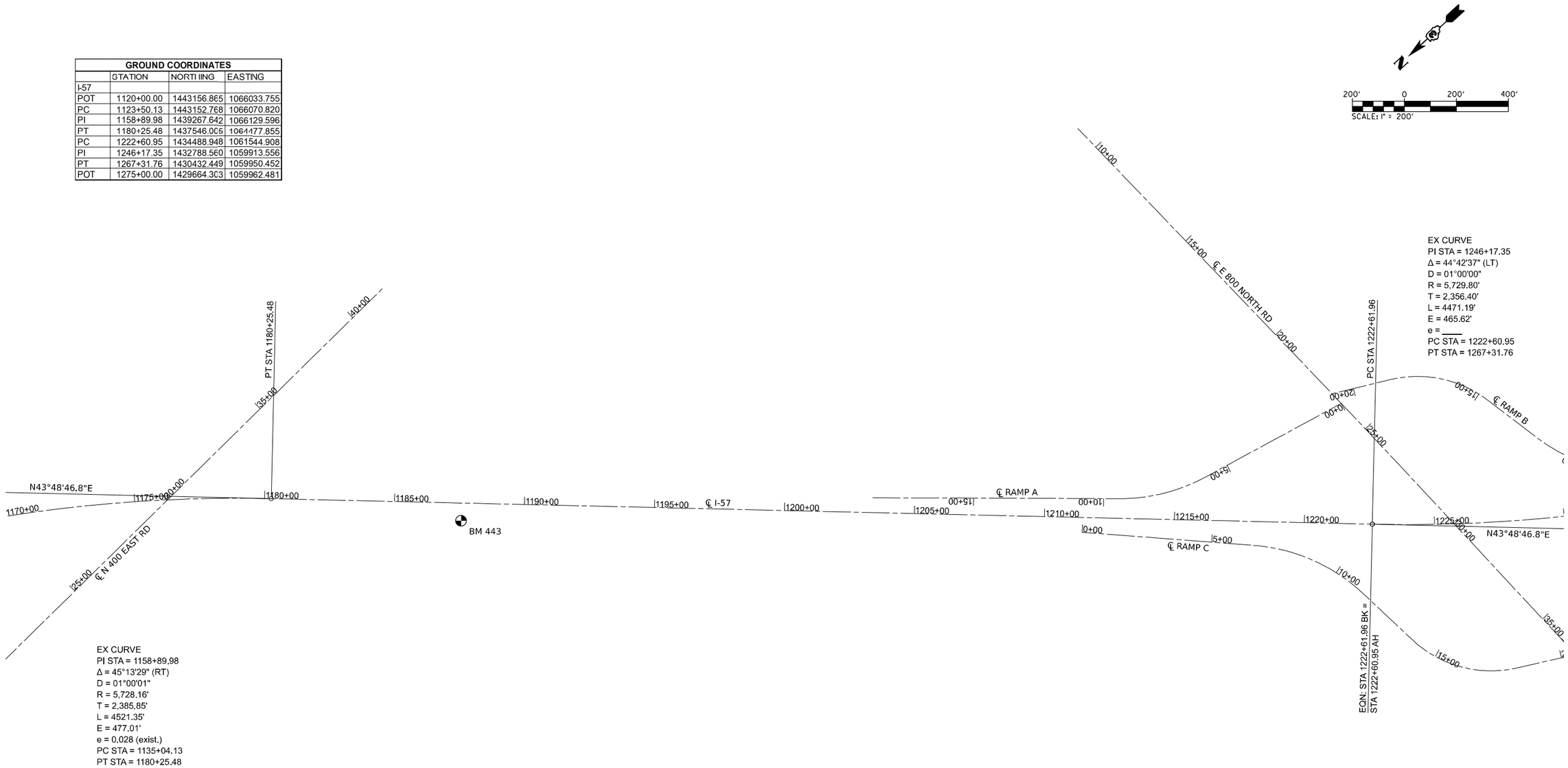

BM 443 - CHISELED SQUARE ON SOUTHWEST WINGWALL OF SOUTHBOUND STRUCTURE. STA. 1187+57.4, 68.1' RT., ELEV. 685.89.

MODEL: Alignment - Alignment [Sheet]
FILE NAME: H:\P\222101 - D3 V-V\WO 13 - I-57 over Louis Creek-PSE\CADD\Microstation\CADD Sheets\D368M23-sht-align.dgn

OATES ASSOCIATES
www.oatesassociates.com
ILLINOIS DESIGN FIRM LICENSE NO.: 184.001115

USER NAME = breanna.frahm	DESIGNED -	REVISED -
	DRAWN -	REVISED -
	CHECKED -	REVISED -
PLOT DATE = 3/20/2025	DATE -	REVISED -

STATE OF ILLINOIS
DEPARTMENT OF TRANSPORTATION

ALIGNMENT PLAN

SCALE: 1"=200' | SHEET 1 OF 1 SHEETS | STA. TO STA.

F.A.I. RTE.	SECTION	COUNTY	TOTAL SHEETS	SHEET NO.
57	((38-7B)BR)BR	IROQUOIS	84	15
		CONTRACT NO. 66M23		
	ILLINOIS	FED. AID PROJECT		

EX CURVE
PI STA = 1158+89.98
Δ = 45°13'29" (RT)
D = 01°00'01"
R = 5,728.16'
T = 2,385.85'
L = 4521.35'
E = 477.01'
e = 0.028 (existing)
PC STA = 1135+04.13
PT STA = 1180+25.48

SPBGR TY A 6' POSTS = 225'
TBT TY 1 (SPL) TAN = 1 EA
TBT TY 6 = 1 EA
PR LON = 300'

SPBGR TY A 6' POSTS = 287.5'
TBT TY 1 (SPL) TAN = 1 EA
TBT TY 6 = 1 EA
PR LON = 362.5'

50' 0 50' 100'
SCALE: 1" = 50'

PT STA 1180+25.48

I-57
BEGIN PROJECT
STA 1180+40

CONST. LIMITS

LOUIS CREEK

SN 038-0230

SN 038-0229

℄ I-57

1180+00 1181 1182 1183 1184 1185+00 1186 1187 1188 1189 1190+00 1191 1192

TRANSITION SHOULDER CROSS
SLOPE FROM 4% TO 2%
IN THIS SECTION

I-57
END PROJECT
STA 1191+00

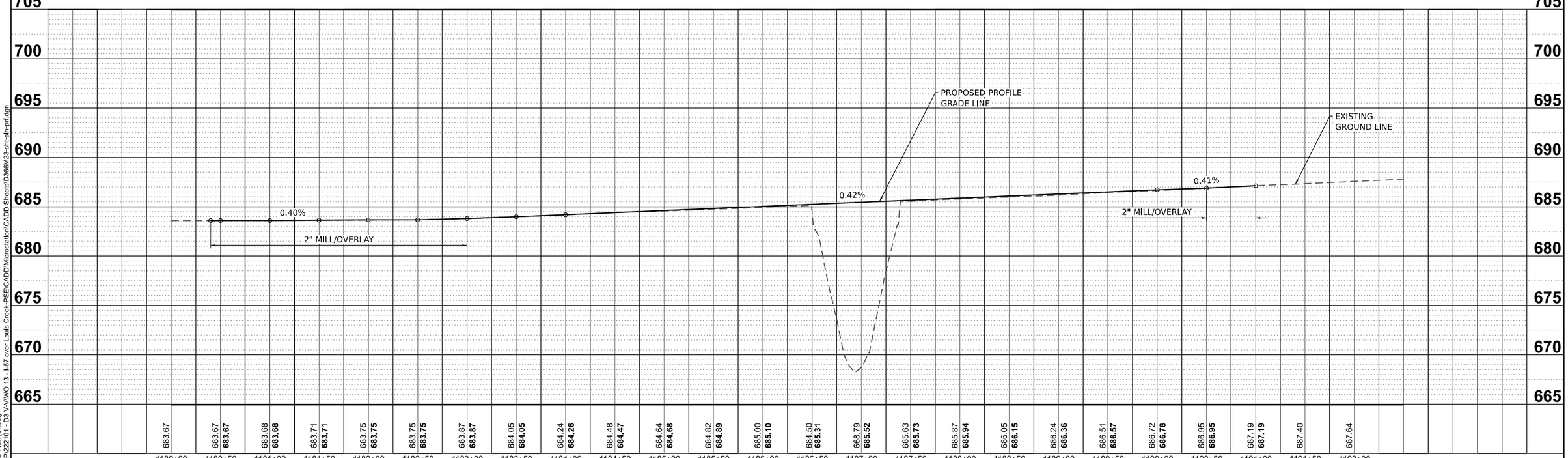

MODEL: NB - NB Plan [Sheet]
FILE NAME: H:\P222101 - D3 VA\WO 13 - I-57 over Louis Creek-PSE\CADD\Microstation\CADD Sheets\D366M23-sht-pln-prf.dgn

OATES ASSOCIATES
www.oatesassociates.com
ILLINOIS DESIGN FIRM LICENSE NO.: 184.001115

USER NAME = breanna.frahm	DESIGNED -	REVISED -	
	DRAWN -	REVISED -	
	CHECKED -	REVISED -	
PLOT DATE = 3/20/2025	DATE -	REVISED -	

STATE OF ILLINOIS
DEPARTMENT OF TRANSPORTATION

PLAN AND PROFILE
NB I-57

SCALE: 1" = 50' | SHEET 1 OF 2 SHEETS | STA. TO STA.

F.A.I. RTE.	SECTION	COUNTY	TOTAL SHEETS	SHEET NO.
57	((38-7B)BR)BR	IROQUOIS	84	16
		CONTRACT NO. 66M23		
		ILLINOIS	FED. AID PROJECT	

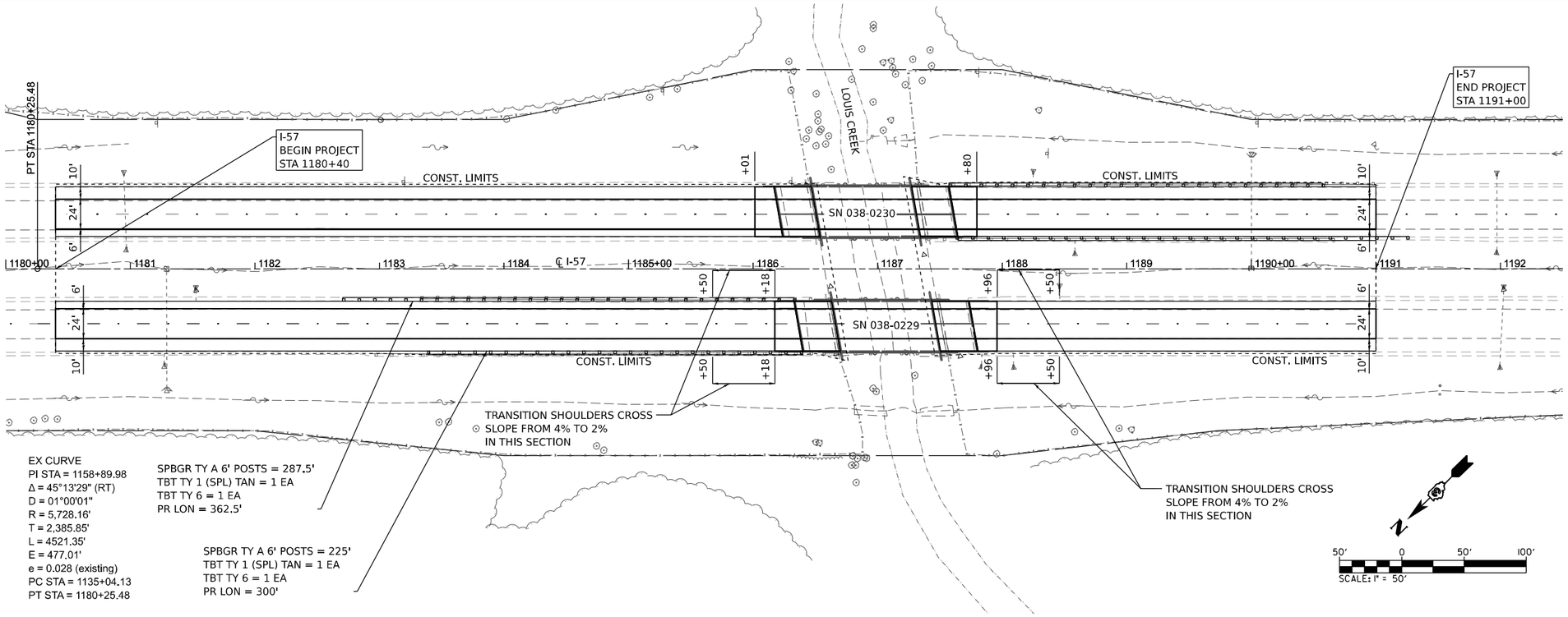

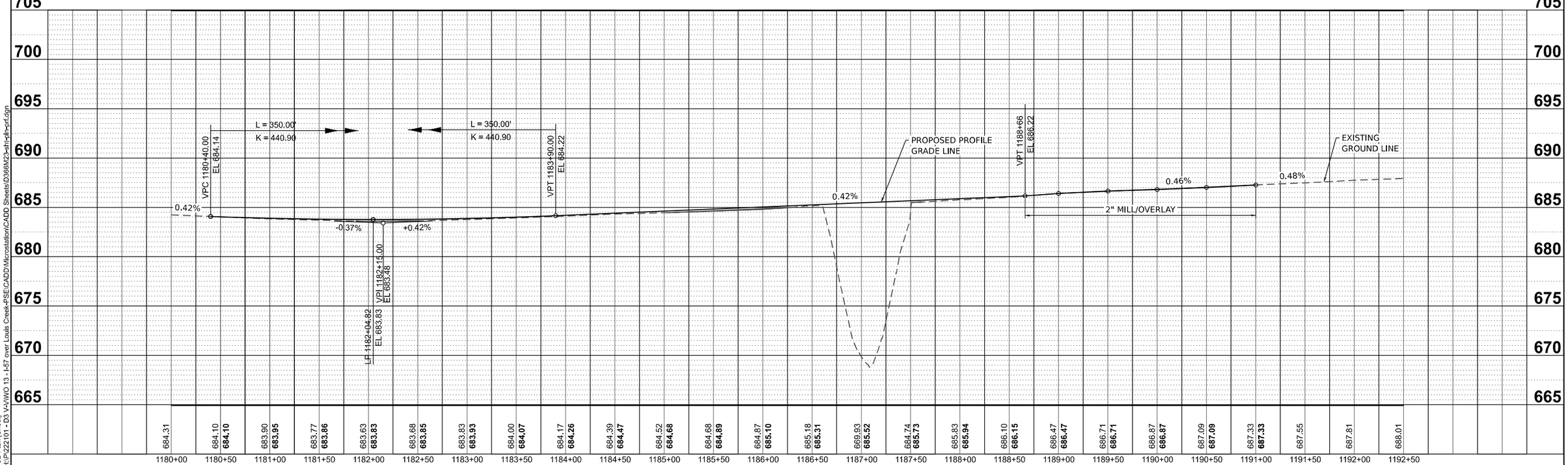

MODEL: SB - SB Plan [Sheet]
FILE NAME: H:\P222101 - D3 VA\WO 13 - I-57 over Louis Creek-PSE\CADD\Microstation\CADD Sheets\D366M23-sht-pln-prf.dgn

OATES ASSOCIATES
www.oatesassociates.com
ILLINOIS DESIGN FIRM LICENSE NO.: 184.001115

USER NAME = breanna.frahm	DESIGNED -	REVISED -	
	DRAWN -	REVISED -	
	CHECKED -	REVISED -	
PLOT DATE = 3/20/2025	DATE -	REVISED -	

STATE OF ILLINOIS
DEPARTMENT OF TRANSPORTATION

PLAN AND PROFILE
SB I-57

SCALE: 1" = 50' | SHEET 2 OF 2 SHEETS | STA. | TO STA.

F.A.I. RTE.	SECTION	COUNTY	TOTAL SHEETS	SHEET NO.
57	((38-7B)BR)BR	IROQUOIS	84	17
		CONTRACT NO. 66M23		
		ILLINOIS	FED. AID PROJECT	

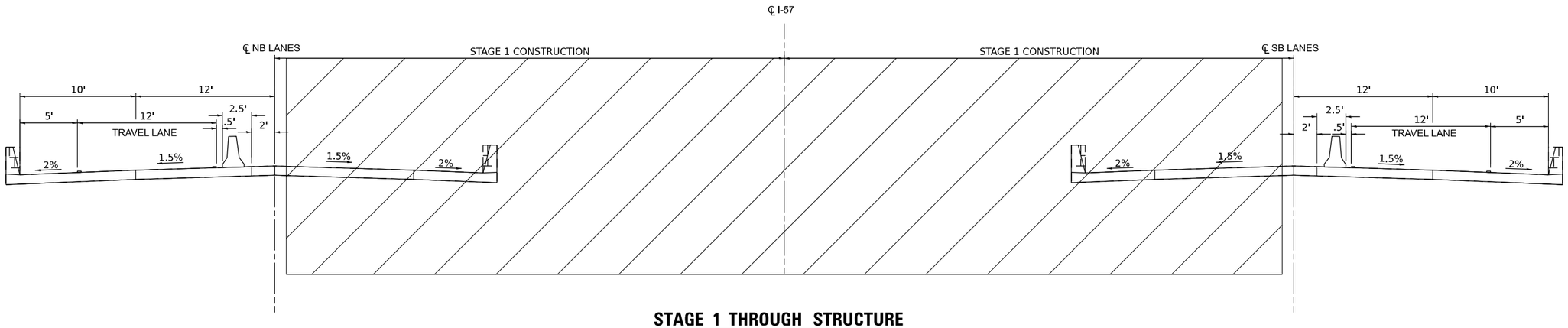

STAGE 1 THROUGH STRUCTURE

NB: STA 1186+01 TO STA 1187+80
SB: STA 1186+18 TO STA 1187+96

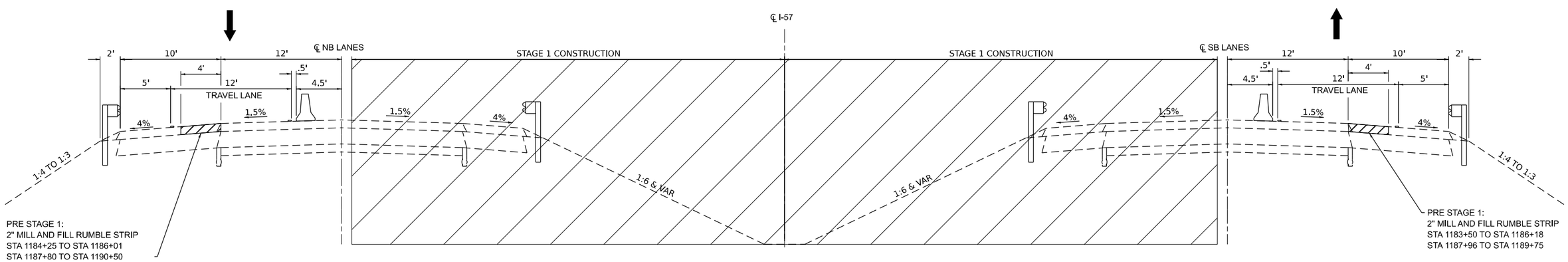

STAGE 1 MAINLINE

STA 1180+40 TO STA 1191+00
BRIDGE OMISSION
NB: STA 1186+01 TO STA 1187+80
SB: STA 1186+18 TO STA 1187+96

MODEL: MOT Stage 1 [Sheet]
FILE NAME: H:\P222101 - D3 VA\WO 13 - I-57 over Louis Creek-PSE\CADD\Microstation\CADD Sheets\D368M23-sht-typical.dgn

OATES ASSOCIATES
www.oatesassociates.com
ILLINOIS DESIGN FIRM LICENSE NO.: 184.001115

USER NAME = breanna.frahm	DESIGNED -	REVISED -
	DRAWN -	REVISED -
	CHECKED -	REVISED -
PLOT DATE = 3/20/2025	DATE -	REVISED -

STATE OF ILLINOIS
DEPARTMENT OF TRANSPORTATION

MAINTENANCE OF TRAFFIC PLANS
STAGE 1 TYPICAL SECTIIONS

SCALE: | SHEET 1 OF 10 SHEETS | STA. TO STA.

F.A.I. RTE.	SECTION	COUNTY	TOTAL SHEETS	SHEET NO.
57	((38-7B)BR)BR	IROQUOIS	84	18
		CONTRACT NO. 66M23		
	ILLINOIS	FED. AID PROJECT		

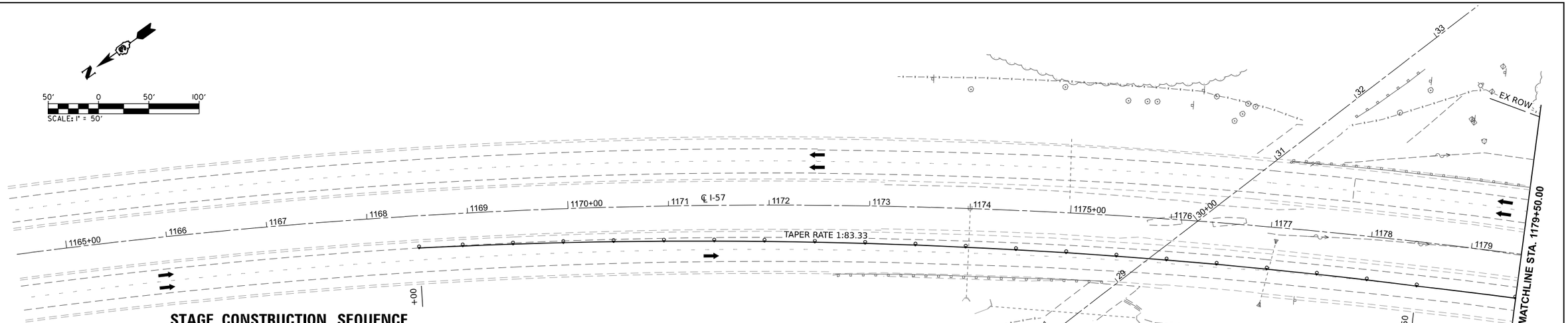

STAGE CONSTRUCTION SEQUENCE

THE FOLLOWING STAGE CONSTRUCTION SEQUENCE IS FOR INFORMATION ONLY. THE CONTRACTOR IS RESPONSIBLE FOR PLANNING AND EXECUTING THIS PROJECT WHICH SHALL BE SUBJECT TO THE APPROVAL OF THE ENGINEER.

PRE-STAGE 1:

1. FILL EXISTING RUMBLE STRIP ALONG NB AND SB LANES. UTILIZE TRAFFIC CONTROL STANDARD 701406.
2. EXISTING GUARDRAIL TO REMAIN IN PLACE.
3. SET UP STAGE 1 TRAFFIC CONTROL.

STAGE 1:

1. DEMOLISH HALF OF SN 038-0151 AND SN 038-0152
2. EXISTING GUARDRAIL ON DRIVING SHOULDER TO REMAIN IN PLACE.
3. CONSTRUCT INSIDE HALF OF SN 038-0230 AND SN 038-0229. UTILIZING TRAFFIC CONTROL STND 701402. INSTALL TRAFFIC BARRIER TERMINAL TYPE 6 TO APPROACH PARAPET OF THE NEW BRIDGE AND TIE IT INTO EXISTING GUARDRAIL OF THE APPROACH PASSING LANE.
4. CONSTRUCT TEMPORARY HMA RAMPS FROM EXISTING ROAD PROFILE TO NEW BRIDGE DECK FOR PASSING LANE.
5. RELOCATE TRAFFIC TO STAGE 2: DIRECT TRAFFIC ONTO PASSING LANES.

GENERAL NOTES

1. FOR DIMENSIONS AND SPACING NOT SHOWN, SEE HIGHWAY STANDARD 701400 AND 701402.

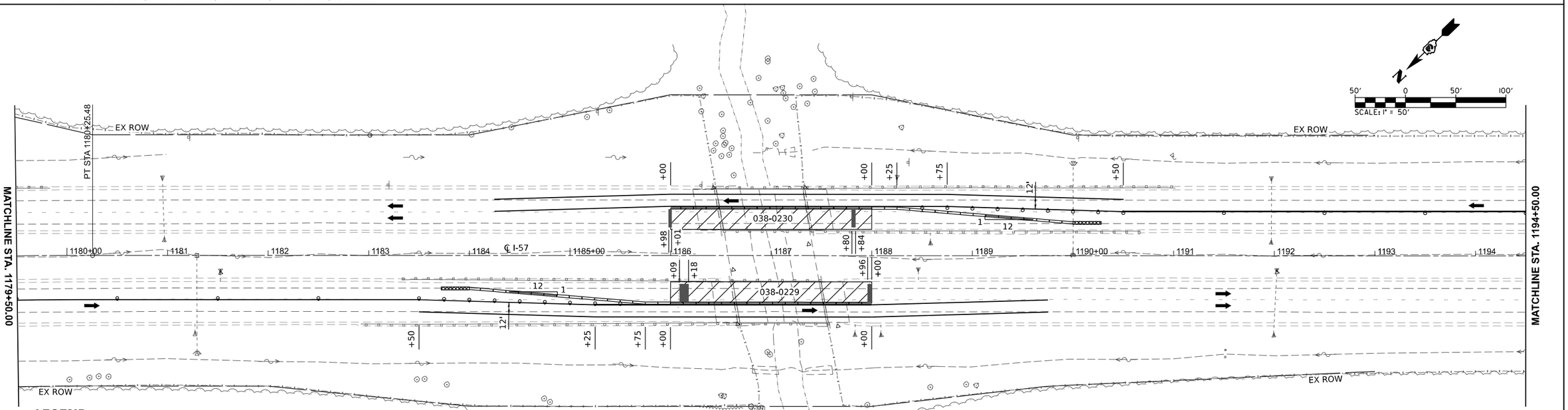

LEGEND

- WORK ZONE
- TEMPORARY CONCRETE BARRIER
- DRUM WITH STEADY BURNING BI-DIRECTIONAL LIGHT
- DIRECTION OF TRAFFIC
- TEMPORARY IMPACT ATTENUATOR
- TEMPORARY RAMP

MODEL: Stage 1 - Plan 1 [Sheet]
FILE NAME: H:\P222101 - D3 V-A\WO 13 - I-57 over Louis Creek-PSE\CADD\Microstation\CADD Sheets\D366M23-sht-staging_1.dgn

OATES ASSOCIATES
www.oatesassociates.com
ILLINOIS DESIGN FIRM LICENSE NO.: 184.001115

USER NAME = breanna.frahm	DESIGNED -	REVISED -
	DRAWN -	REVISED -
	CHECKED -	REVISED -
PLOT DATE = 4/4/2025	DATE -	REVISED -

STATE OF ILLINOIS
DEPARTMENT OF TRANSPORTATION

MAINTENANCE OF TRAFFIC PLANS
STAGE 1

SCALE: 1"=50' | SHEET 2 OF 10 SHEETS | STA. 1164+50.00 R4 TO STA. 1194+50.00 R4

F.A.I. RTE.	SECTION	COUNTY	TOTAL SHEETS	SHEET NO.
57	((38-7B)BR)BR	IROQUOIS	84	19

CONTRACT NO. 66M23

ILLINOIS | FED. AID PROJECT

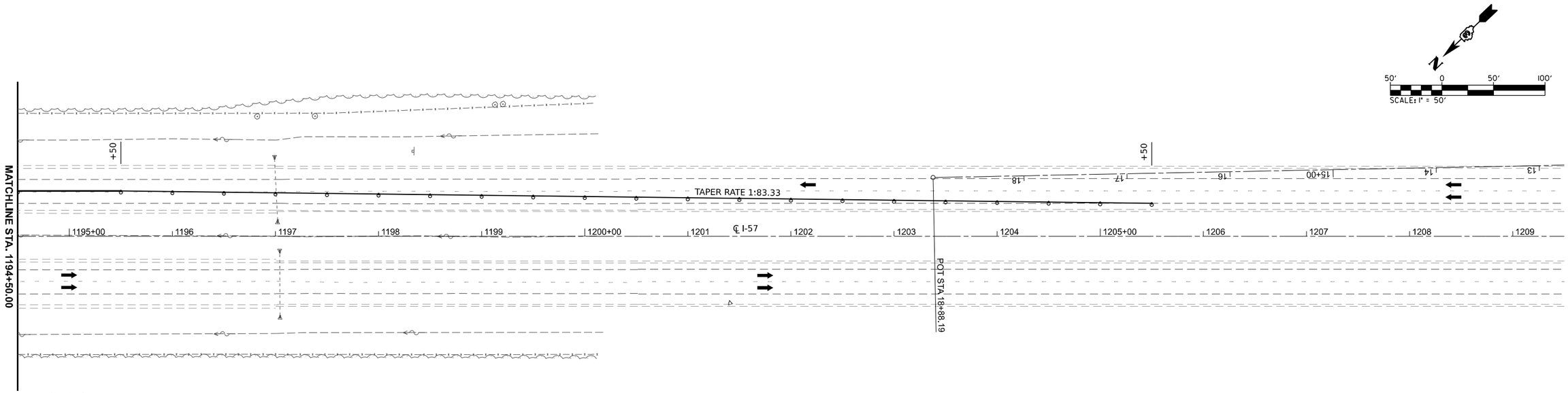

LEGEND

- WORK ZONE
- TEMPORARY CONCRETE BARRIER
- DRUM WITH STEADY BURNING BI-DIRECTIONAL LIGHT
- DIRECTION OF TRAFFIC
- TEMPORARY IMPACT ATTENUATOR

MODEL: Stage 1 - Plan 3 [Sheet]
FILE NAME: H:\P222101 - D3 VA\WO 13 - I-57 over Louis Creek-PSE\CADD\Microstation\CADD Drawings\D366M23-stage-1.dgn

OATES ASSOCIATES
www.oatesassociates.com
ILLINOIS DESIGN FIRM LICENSE NO.: 184.001115

USER NAME = breanna.frahm	DESIGNED -	REVISED -
	DRAWN -	REVISED -
	CHECKED -	REVISED -
PLOT DATE = 3/20/2025	DATE -	REVISED -

STATE OF ILLINOIS
DEPARTMENT OF TRANSPORTATION

MAINTENANCE OF TRAFFIC PLANS
STAGE 1

SCALE: 1"=50' | SHEET 3 OF 10 SHEETS | STA. 1194+50.00 R4 TO STA. 1209+50.00 R4

F.A.I. RTE.	SECTION	COUNTY	TOTAL SHEETS	SHEET NO.
57	((38-7B)BR)BR	IROQUOIS	84	20
		CONTRACT NO. 66M23		
	ILLINOIS	FED. AID PROJECT		

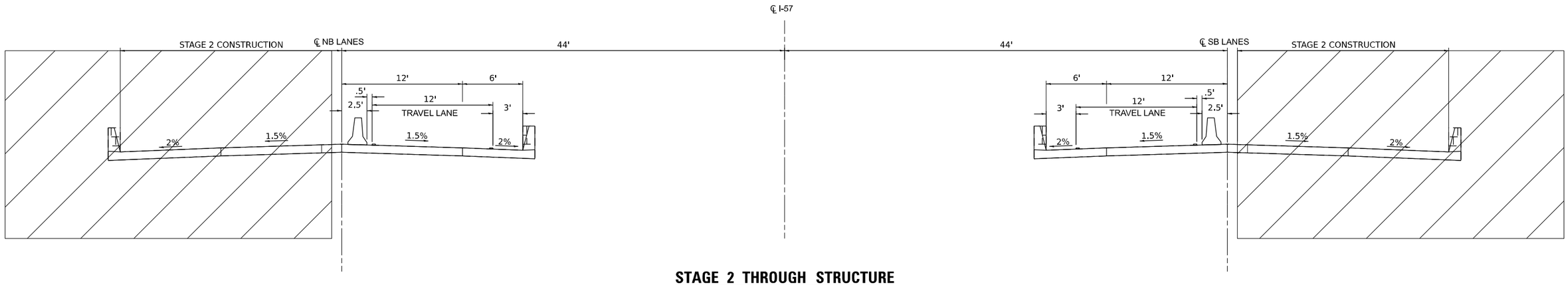

STAGE 2 THROUGH STRUCTURE

NB: STA 1186+01 TO STA 1187+80
SB: STA 1186+18 TO STA 1187+96

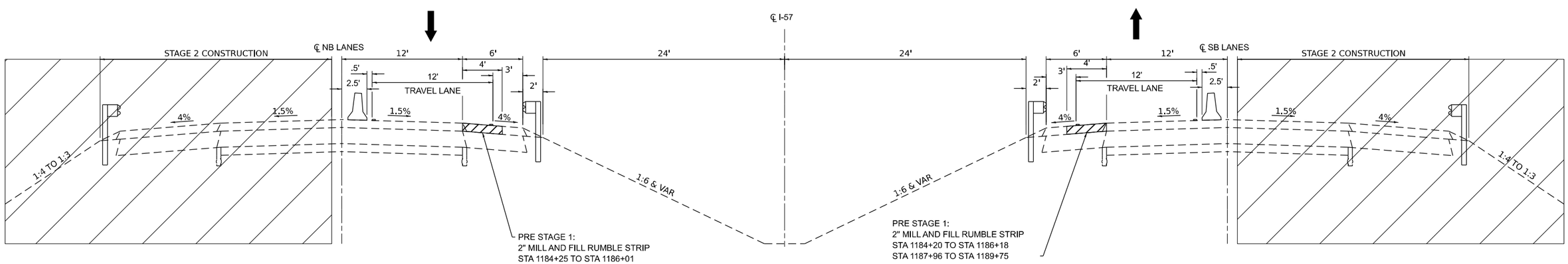

STAGE 2 MAINLINE

STA 1180+40 TO STA 1191+00
BRIDGE OMISSION
NB: STA 1186+01 TO STA 1187+80
SB: STA 1186+18 TO STA 1187+96

MODEL: MOT Stage 2 [Sheet]
FILE NAME: H:\P222101 - D3 VA\WO 13 - I-57 over Louis Creek-PSE\CADD\Microstation\CADD Sheets\D368M23-sht-typical.dgn

OATES ASSOCIATES
www.oatesassociates.com
ILLINOIS DESIGN FIRM LICENSE NO.: 184.001115

USER NAME = breanna.frahm	DESIGNED -	REVISED -
	DRAWN -	REVISED -
	CHECKED -	REVISED -
PLOT DATE = 3/20/2025	DATE -	REVISED -

STATE OF ILLINOIS
DEPARTMENT OF TRANSPORTATION

MAINTENANCE OF TRAFFIC PLANS
STAGE 2 TYPICAL SECTIONS

SCALE: | SHEET 4 OF 10 SHEETS | STA. | TO STA.

F.A.I. RTE.	SECTION	COUNTY	TOTAL SHEETS	SHEET NO.
57	((38-7B)BR)BR	IROQUOIS	84	21
		CONTRACT NO. 66M23		
	ILLINOIS	FED. AID PROJECT		

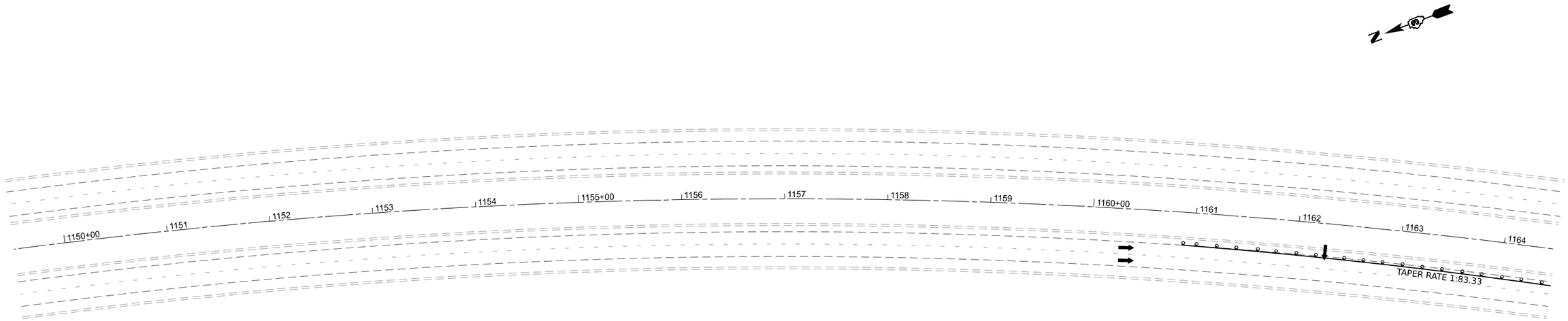

MODEL: Stage 2 - Plan 5 [Sheet]
FILE NAME: H:\P222101 - D3 VA-\WO 13 - I-57 over Louis Creek-PSE\CADD\Microstation\CADD Drawings\D366M23-stage-2.dgn

OATES ASSOCIATES
www.oatesassociates.com
ILLINOIS DESIGN FIRM LICENSE NO.: 184.001115

USER NAME = breanna.frahm	DESIGNED -	REVISED -
	DRAWN -	REVISED -
	CHECKED -	REVISED -
PLOT DATE = 3/20/2025	DATE -	REVISED -

STATE OF ILLINOIS
DEPARTMENT OF TRANSPORTATION

MAINTENANCE OF TRAFFIC
STAGE 2

SCALE: 1"=50' | SHEET 5 OF 10 SHEETS | STA. C 1149+50.00 TO STA. C 1164+50.00

F.A.I. RTE.	SECTION	COUNTY	TOTAL SHEETS	SHEET NO.
57	((38-7B)BR)BR	IROQUOIS	84	22
		CONTRACT NO. 66M23		
	ILLINOIS	FED. AID PROJECT		

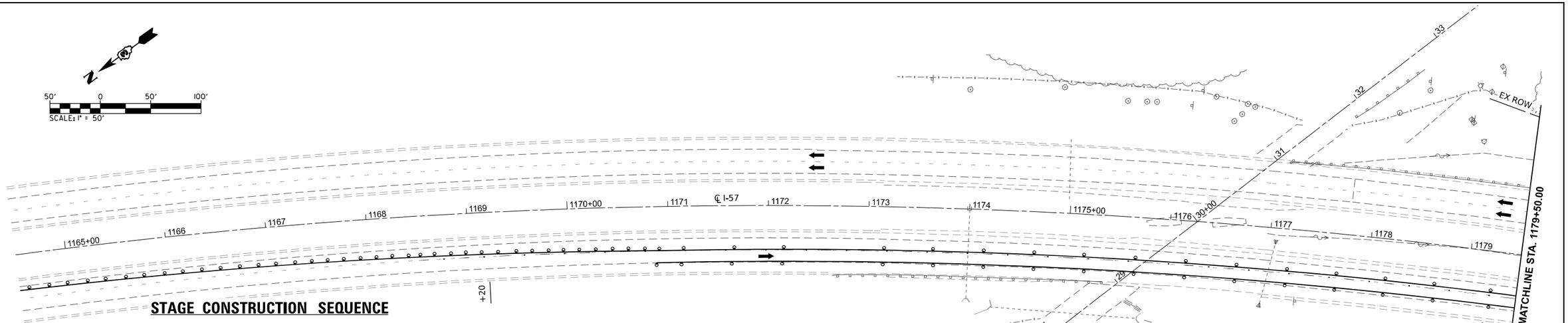

STAGE CONSTRUCTION SEQUENCE

THE FOLLOWING STAGE CONSTRUCTION SEQUENCE IS FOR INFORMATION ONLY. THE CONTRACTOR IS RESPONSIBLE FOR PLANNING AND EXECUTING THIS PROJECT WHICH SHALL BE SUBJECT TO THE APPROVAL OF THE ENGINEER.

STAGE 2:

1. STAGE 2 TRAFFIC CONTROL IN USE AT END OF STAGE 1.
2. DEMOLISH REMAINING HALF OF SN 038-0151 AND SN 038-0152. UTILIZE TRAFFIC CONTROL STANDARD 701402.
3. CONSTRUCT OUTSIDE HALF OF SN 038-0230 AND 038-0229. INSTALL TRAFFIC BARRIER TERMINAL TYPE 6 FROM NEW BRIDGE APPROACH DRIVING LANE PARAPET TO EXISTING GUARDRAIL. CONSTRUCT TEMPORARY HMA RAMP FROM EXISTING ROAD PROFILE TO NEW BRIDGE DECK FOR DRIVING LANE. UTILIZE TRAFFIC CONTROL STANDARD 701402.
4. REMOVE STAGE 2 TRAFFIC CONTROL.

STAGE 3:

1. MILL AND RESURFACE HMA MAINLINE AND SHOULDERS. UTILIZE TRAFFIC CONTROL STANDARD 701406. INSTALL TEMP RAMPS FOR MILLED TRAVEL LANES PRIOR TO OVERLAY PLACEMENT.
2. REMOVE EXISTING GUARDRAIL AND EXCAVATE FOR HMA GUARDRAIL STABILIZATION. INSTALL HMA GUARDRAIL STABILIZATION AND NEW GUARDRAIL. INSTALL PAVEMENT MARKINGS. UTILIZE TRAFFIC CONTROL STANDARD 701406.

GENERAL NOTES

1. FOR DIMENSIONS AND SPACING NOT SHOWN, SEE HIGHWAY STANDARD 701400 AND 701402.

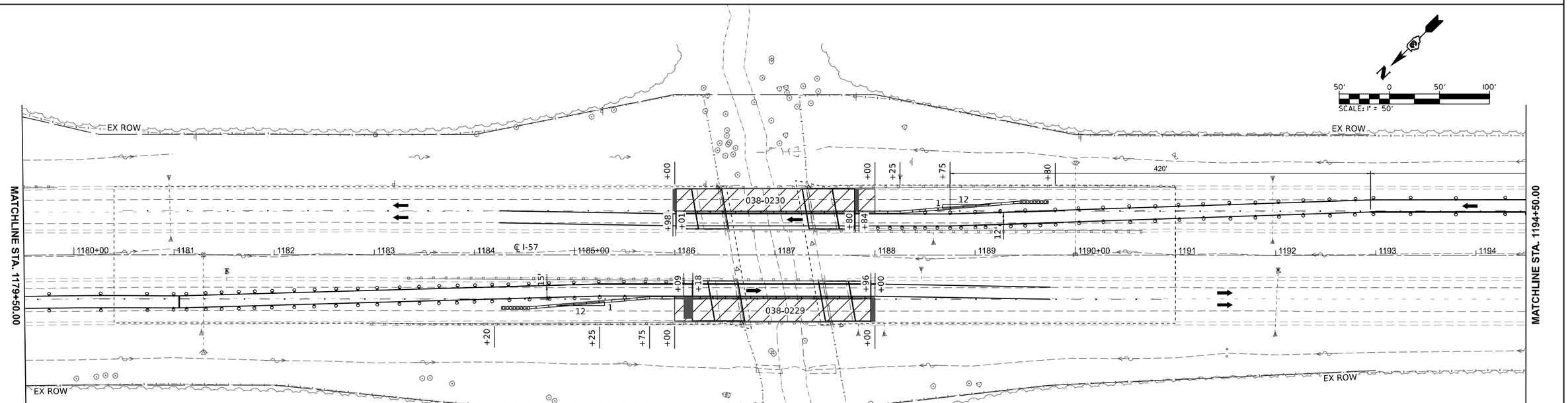

LEGEND

- WORK ZONE
- TEMPORARY CONCRETE BARRIER
- DRUM WITH STEADY BURNING BI-DIRECTIONAL LIGHT
- DIRECTION OF TRAFFIC
- TEMPORARY IMPACT ATTENUATOR

MODEL: Stage 2 - Plan 1 [Sheet]
FILE NAME: H:\P222101 - D3 V-A\WO 13 - I-57 over Louis Creek-PSE\CADD\Microstation\CADD Sheets\D366M23-sht-staging_2.dgn

OATES ASSOCIATES
www.oatesassociates.com
ILLINOIS DESIGN FIRM LICENSE NO.: 184.001115

USER NAME = breanna.frahm	DESIGNED -	REVISED -
	DRAWN -	REVISED -
	CHECKED -	REVISED -
PLOT DATE = 4/4/2025	DATE -	REVISED -

STATE OF ILLINOIS
DEPARTMENT OF TRANSPORTATION

MAINTENANCE OF TRAFFIC PLANS
STAGE 2

SCALE: 1"=50′ | SHEET 6 OF 10 SHEETS | STA. 1164+50.00 R4 TO STA. 1194+50.00 R4

F.A.I. RTE.	SECTION	COUNTY	TOTAL SHEETS	SHEET NO.
57	((38-7B)BR)BR	IROQUOIS	84	23

CONTRACT NO. 66M23

ILLINOIS | FED. AID PROJECT

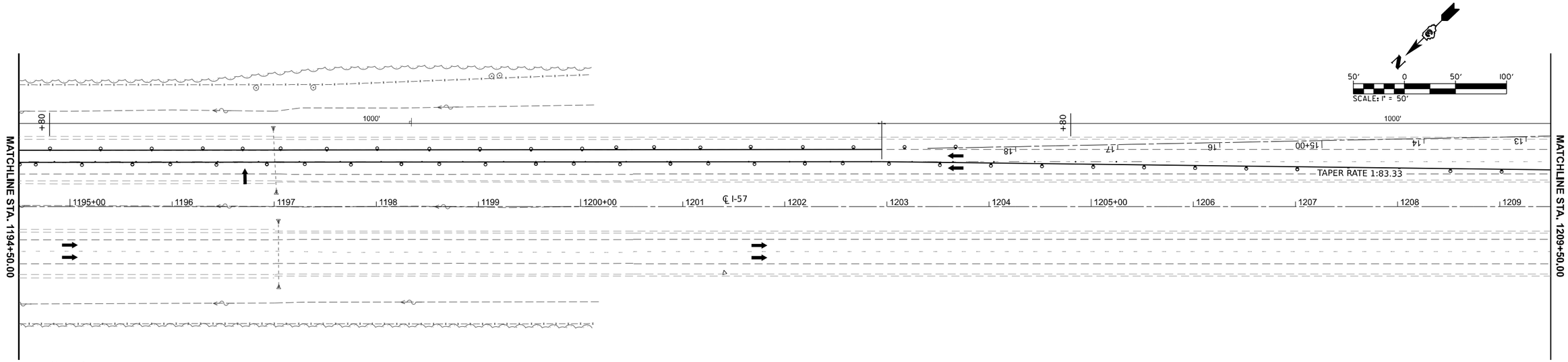

LEGEND

- WORK ZONE
- TEMPORARY CONCRETE BARRIER
- DRUM WITH STEADY BURNING BI-DIRECTIONAL LIGHT
- DIRECTION OF TRAFFIC
- TEMPORARY IMPACT ATTENUATOR

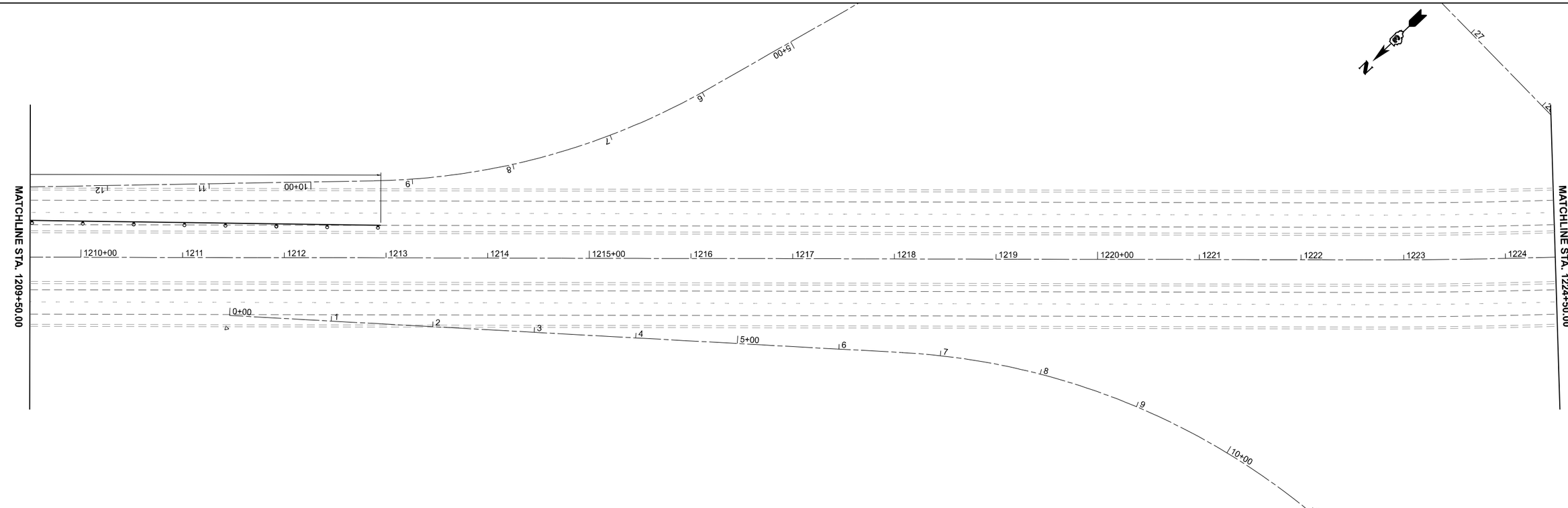

MODEL: Stage 2 - Plan 3 [Sheet]
FILE NAME: H:\P222101 - D3 V-A\WO 13 - I-57 over Louis Creek-PSE\CADD\Microstation\CADD Drawings\D36\M23-stage2.dgn

OATES ASSOCIATES
www.oatesassociates.com
ILLINOIS DESIGN FIRM LICENSE NO.: 184.001115

USER NAME = breanna.frahm	DESIGNED -	REVISED -	
	DRAWN -	REVISED -	
	CHECKED -	REVISED -	
PLOT DATE = 3/20/2025	DATE -	REVISED -	

STATE OF ILLINOIS
DEPARTMENT OF TRANSPORTATION

MAINTENANCE OF TRAFFIC PLANS
STAGE 2

SCALE: 1"=50' | SHEET 7 OF 10 SHEETS | STA. 1194+50.00 R4 TO STA. 1209+50.00 R4

F.A.I. RTE.	SECTION	COUNTY	TOTAL SHEETS	SHEET NO.
57	((38-7B)BR)BR	IROQUOIS	84	24
		CONTRACT NO. 66M23		
		ILLINOIS	FED. AID PROJECT	

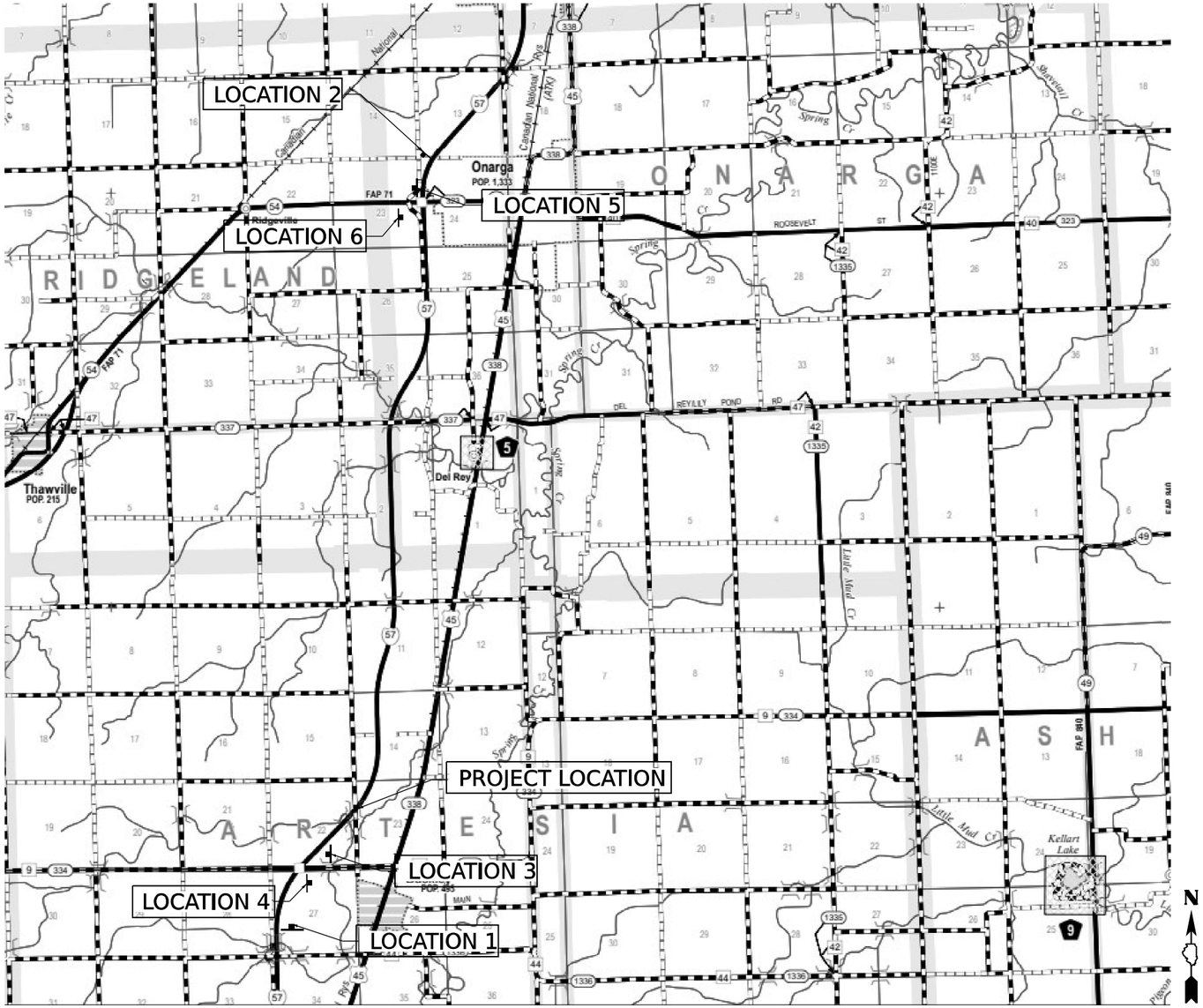

GENERAL NOTES:

ACTUAL MAXIMUM WIDTH ARE TO BE MEASURED BY THE ENGINEER AFTER TEMPORARY CONCRETE BARRIER WALL IS PLACED FOR STAGE 1.

ALL SIGNS SHALL BE POST MOUNTED IN ACCORDANCE WITH ARTICLE 701.14 OF THE STANDARD SPECIFICATIONS FOR ROAD AND BRIDGE CONSTRUCTION.

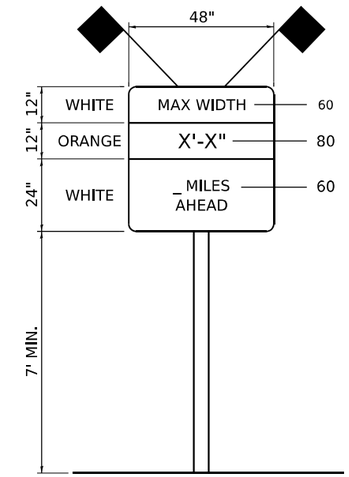

SIGN A
(WIDTH RESTRICTION SIGN)

SIGN B
"NORTH" - M3-1 (24x12)
57 - M1-1.2 (36x36)

SIGN C
"SOUTH" - M3-3 (24x12)
57 - M1-1.2 (36x36)

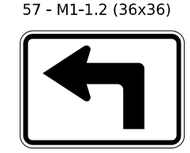

SIGN D
LEFT TURN - M5-1L (21x15)

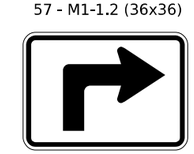

SIGN E
RIGHT TURN - M5-1R (21x15)

LOCATION		SIGNS	DISTANCE
1	US. 57 NB AT CH 9	A/B	1 MILE
2	US. 57 SB AT IL 54	A/C	7 1/2 MILES
3	CH 9 WB AT US. 57 NB ENT	A/B/E	1/2 MILES
4	CH 9 EB AT US. 57 NB ENT	A/B/D	1/2 MILES
5	IL 54 WB AT US. 57 SB ENT	A/C/D	7 1/2 MILES
6	IL 54 EB AT US. 57 SB ENT	A/C/E	7 1/2 MILES

MODEL: MOT-1 [Sheet]
FILE NAME: H:\P222101 - D3 VA\WO 13 - I-57 over Louis Creek-PSE\CADD\Microstation\CADD Sheets\D368M23-sht-traffic maintenance.dgn

OATES ASSOCIATES
www.oatesassociates.com
ILLINOIS DESIGN FIRM LICENSE NO.: 184.001115

USER NAME = breanna.frahm	DESIGNED -	REVISED -
	DRAWN -	REVISED -
	CHECKED -	REVISED -
PLOT DATE = 3/20/2025	DATE -	REVISED -

STATE OF ILLINOIS
DEPARTMENT OF TRANSPORTATION

MAINTENANCE OF TRAFFIC PLANS
MAXIMUM WIDTH SIGNING DETAIL

SCALE: | SHEET 8 OF 10 SHEETS | STA. | TO STA.

F.A.I. RTE.	SECTION	COUNTY	TOTAL SHEETS	SHEET NO.
57	((38-7B)BR)BR	IROQUOIS	84	25

CONTRACT NO. 66M23

ILLINOIS | FED. AID PROJECT

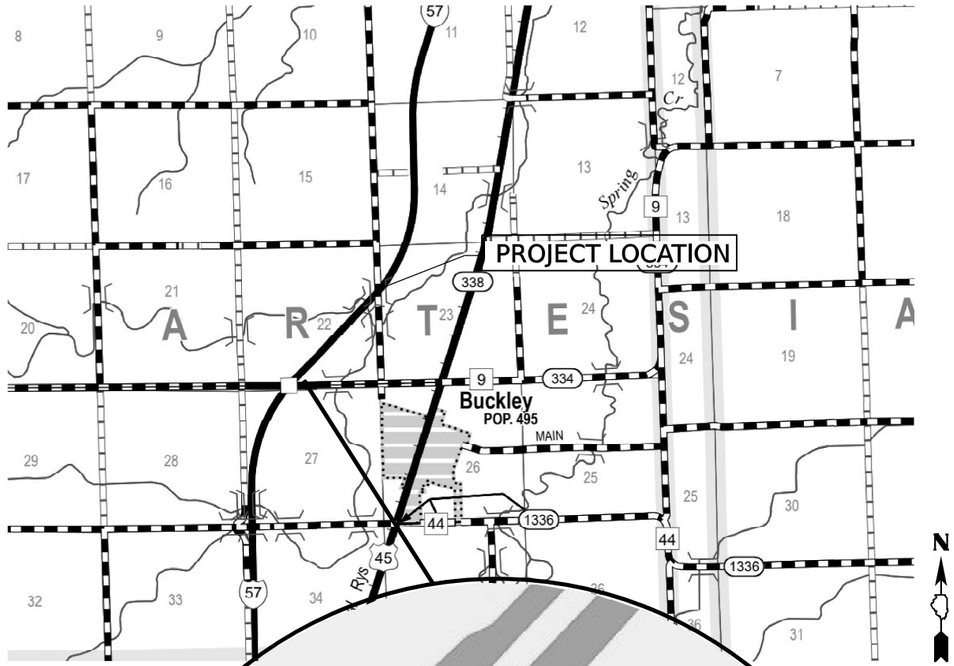

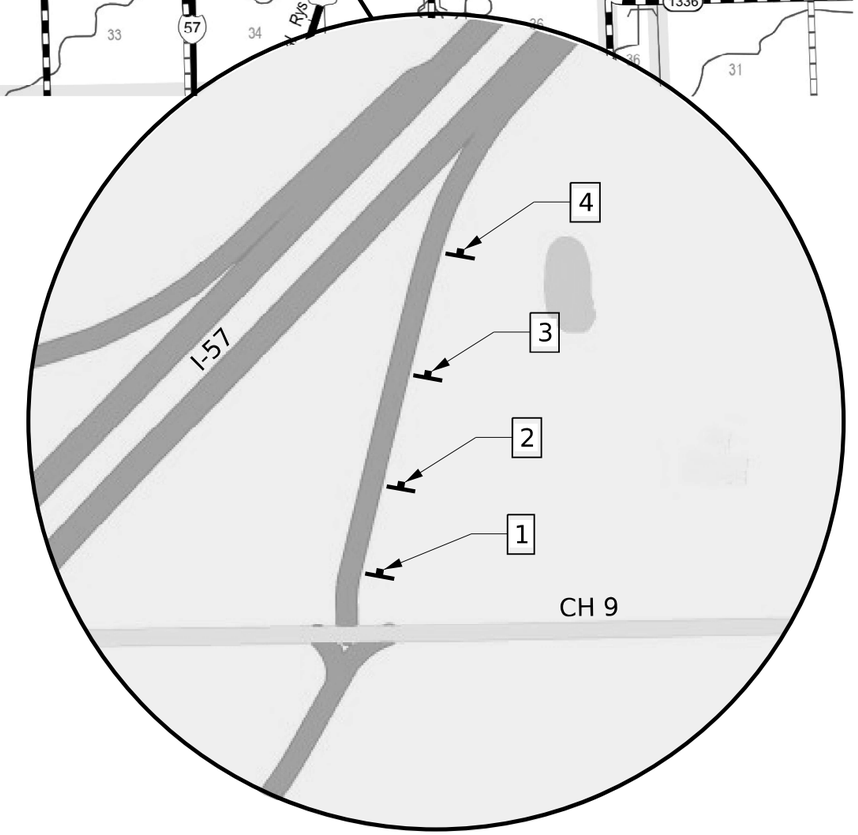

1
W20-I103
48"x48"

2
W9-3L
48"x48"

3
W-5
48"x48"

4
R1-2
60"x60"x60"

*SEE HIGHWAY STANDARD 701411 FOR
ADDITIONAL SIGNAGE REQUIRED

MODEL: Untitled [Sheet]
FILE NAME: H:\P222101 - D3 V-VWO 13 - I-57 over Louis Creek-PSE\CADD\Microstation\CADD Sheets\D368M23-sht-traffic maintenance.dgn

OATES ASSOCIATES
www.oatesassociates.com
ILLINOIS DESIGN FIRM LICENSE NO.: 184.001115

USER NAME = breanna.frahm	DESIGNED -	REVISED -
	DRAWN -	REVISED -
	CHECKED -	REVISED -
PLOT DATE = 3/24/2025	DATE -	REVISED -

STATE OF ILLINOIS
DEPARTMENT OF TRANSPORTATION

MAITENANCE OF TRAFFIC PLANS
ADDITIONAL SIGNAGE

SCALE: | SHEET 9 OF 10 SHEETS | STA. | TO STA.

F.A.I. RTE.	SECTION	COUNTY	TOTAL SHEETS	SHEET NO.
57	((38-7B)BR)BR	IROQUOIS	84	26
		CONTRACT NO. 66M23		
	ILLINOIS	FED. AID PROJECT		

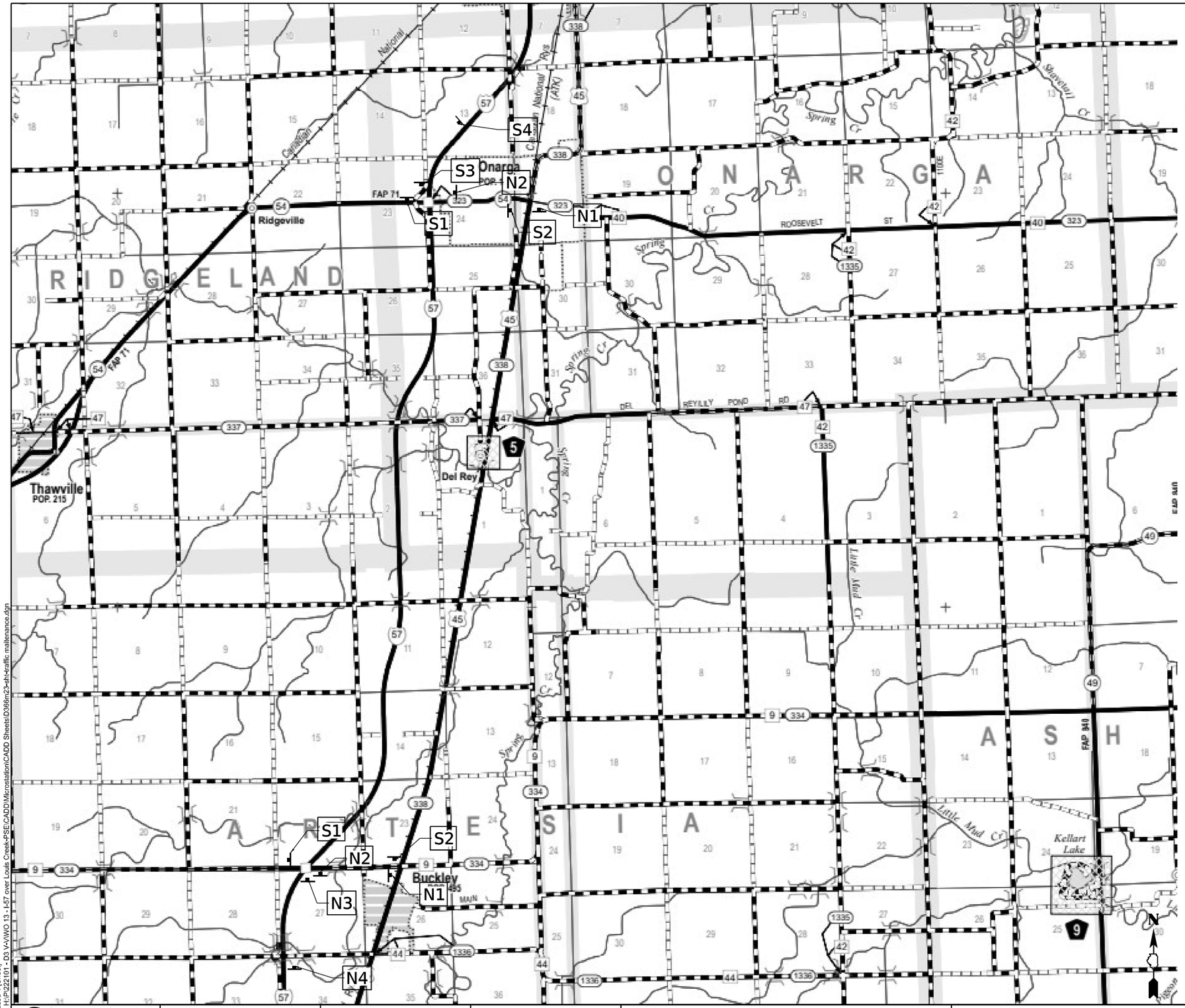

M4-1a(O) (24x12)

M3-1 (24x12)

M1-1.2 (36x36)

BASE ASSEMBLY "N"

M4-1a(O) (24x12)

M3-1 (24x12)

M1-1.2 (36x36)

BASE ASSEMBLY "S"

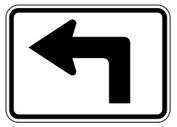

SIGN 1

M5-1L (O) (21x15)

SIGN 2

M5-1R (O) (21x15)

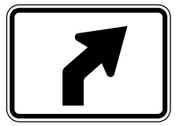

SIGN 3

M5-2R (O) (21x15)

SIGN 4

W16-9P (30 X 18)

NOTES

1. INTERSTATE SHIELD (M-1) AND DIRECTION (M-3) SIGNS SHAL BE BLUE WITH WHITE LETTERS
2. (O) INDICATES FLOURESCENT ORANGE SIGN WITH BLACK SYMBOLS

N S BASE ASSEMBLY N OR S

NX BASE ASSEMBLY N OR S WITH SIGN X

MODEL: Untitled-1 [Sheet]
FILE NAME: H:\P222101 - D3 VA\WO 13 - I-57 over Louis Creek-PSE\CADD\Microstation\CADD Sheets\D368in23-sh-traffic maintenance.dgn

OATES ASSOCIATES
www.oatesassociates.com
ILLINOIS DESIGN FIRM LICENSE NO.: 184.001115

USER NAME = breanna.frahm	DESIGNED -	REVISED -	
	DRAWN -	REVISED -	
	CHECKED -	REVISED -	
PLOT DATE = 3/20/2025	DATE -	REVISED -	

STATE OF ILLINOIS
DEPARTMENT OF TRANSPORTATION

MAINTENANCE OF TRAFFIC PLANS
ALTERNATE ROUTE

SCALE: SHEET 10 OF 10 SHEETS STA. TO STA.

F.A.I. RTE.	SECTION	COUNTY	TOTAL SHEETS	SHEET NO.
57	((38-7B)BR)BR	IROQUOIS	84	27
		CONTRACT NO. 66M23		
		ILLINOIS	FED. AID PROJECT	

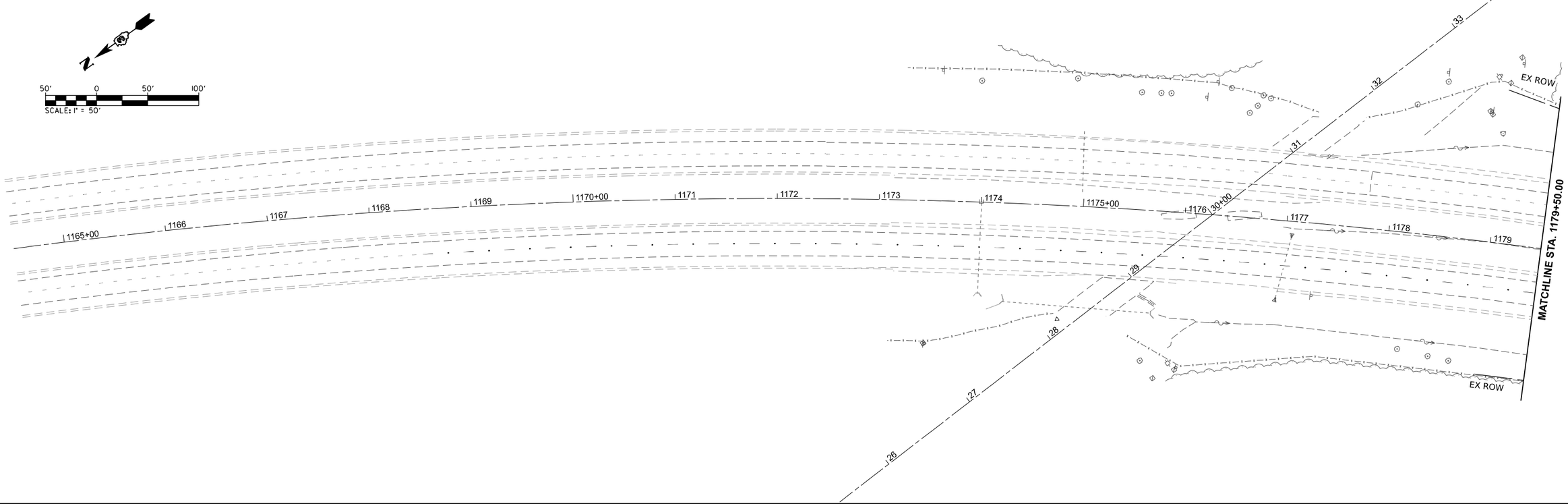

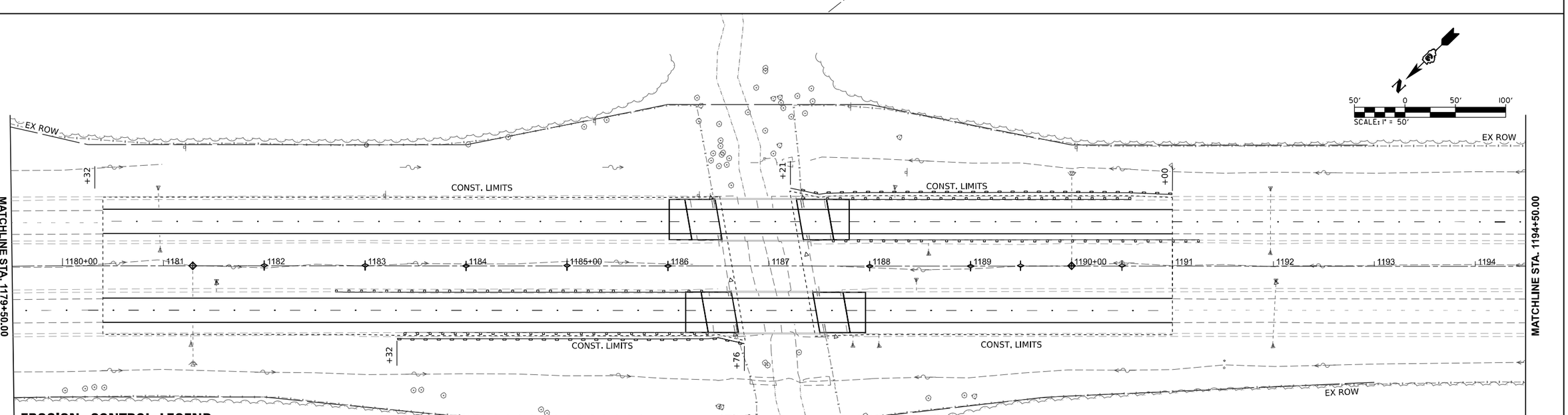

EROSION CONTROL LEGEND

- - - - LIMITS OF CONSTRUCTION

INLET AND PIPE PROTECTION

TEMPORARY DITCH CHECK

PERIMETER EROSION BARRIER
SILT FILTER OR OTHER AS
APPROVED BY THE ENGINEER

NOTE: ALL ITEMS SHALL BE CONSTRUCTED
AS SHOWN ON STANDARD 280001 AND
AS DIRECTED BY THE ENGINEER.

MODEL: EC 1 [Sheet]
FILE NAME: H:\P222101 - D3 V-A\WO 13 - I-57 over Louis Creek-PSE\CADD\Microstation\CADD Sheets\D366M23-sht-erosion control.dgn

OATES ASSOCIATES
www.oatesassociates.com
ILLINOIS DESIGN FIRM LICENSE NO.: 184.001115

USER NAME = breanna.frahm	DESIGNED -	REVISED -
	DRAWN -	REVISED -
	CHECKED -	REVISED -
PLOT DATE = 3/20/2025	DATE -	REVISED -

STATE OF ILLINOIS
DEPARTMENT OF TRANSPORTATION

EROSION CONTROL PLAN

SCALE: 1"=50' | SHEET 1 OF 2 SHEETS | STA. 1164+50.00 R4 TO STA. 1194+50.00 R4

F.A.I. RTE.	SECTION	COUNTY	TOTAL SHEETS	SHEET NO.
57	((38-7B)BR)BR	IROQUOIS	84	28

CONTRACT NO. 66M23

ILLINOIS | FED. AID PROJECT

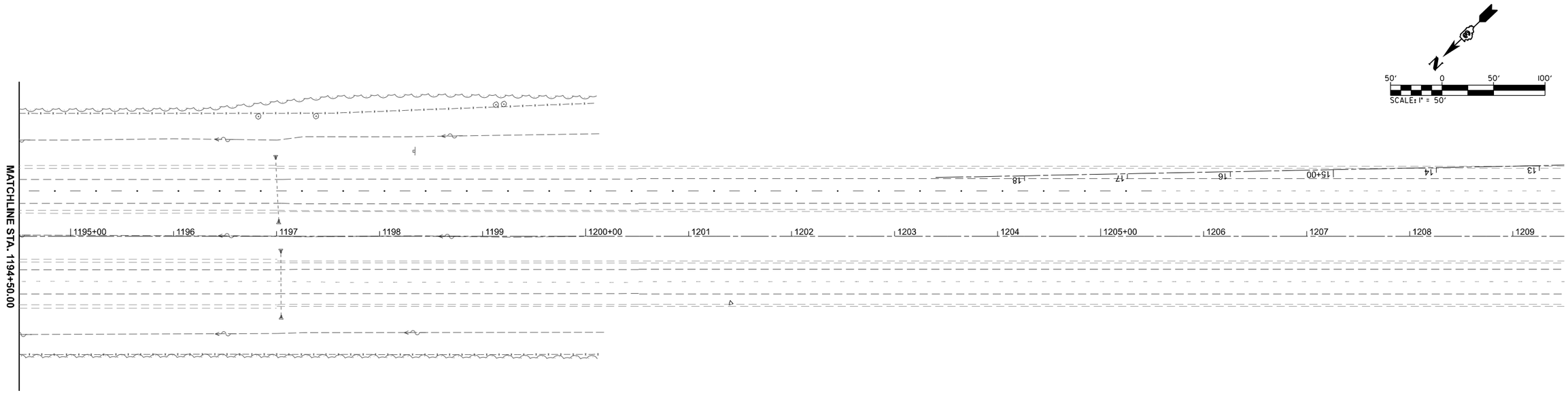

MODEL: EC 2 [Sheet]
FILE NAME: H:\P222101 - D3 VA\WO 13 - I-57 over Louis Creek-PSE\CADD\Microstation\CADD Sheets\D386W23-sh-erosion control.dgn

OATES ASSOCIATES
www.oatesassociates.com
ILLINOIS DESIGN FIRM LICENSE NO.: 184.001115

USER NAME = breanna.frahm	DESIGNED -	REVISED -
	DRAWN -	REVISED -
	CHECKED -	REVISED -
PLOT DATE = 3/20/2025	DATE -	REVISED -

STATE OF ILLINOIS
DEPARTMENT OF TRANSPORTATION

EROSION CONTROL PLAN

SCALE: 1"=50' | SHEET 2 OF 2 SHEETS | STA. 1194+50.00 R4 TO STA. 1209+50.00 R4

F.A.I. RTE.	SECTION	COUNTY	TOTAL SHEETS	SHEET NO.
57	((38-7B)BR)BR	IROQUOIS	84	29
		CONTRACT NO. 66M23		
	ILLINOIS	FED. AID PROJECT		

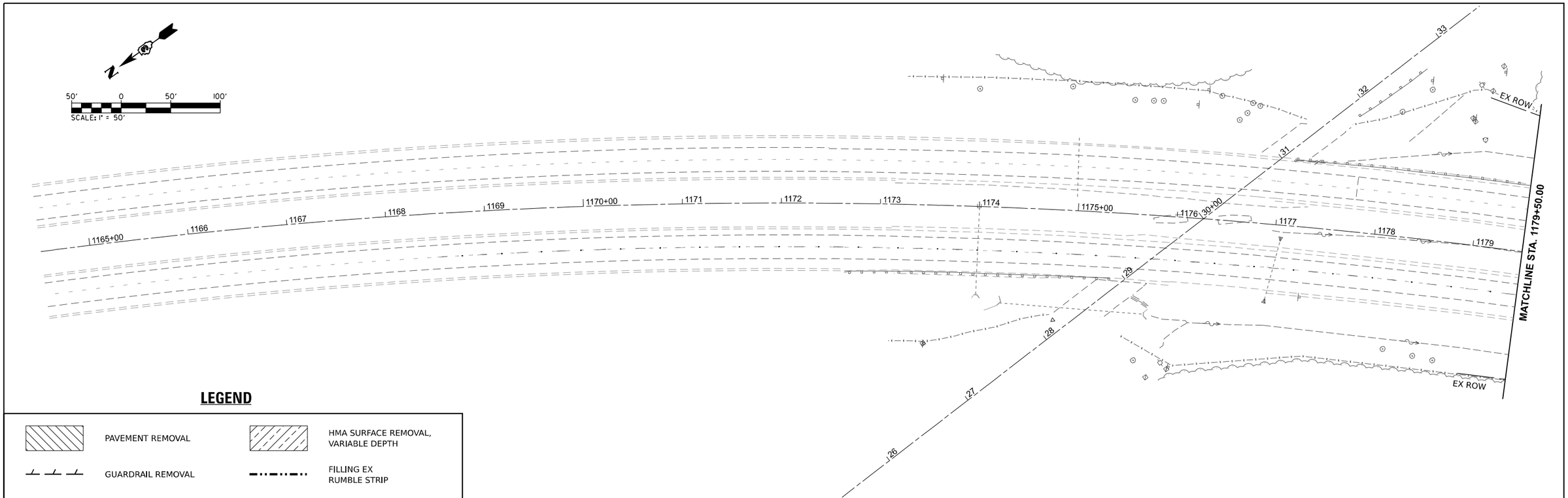

LEGEND

	PAVEMENT REMOVAL		HMA SURFACE REMOVAL, VARIABLE DEPTH
	GUARDRAIL REMOVAL		FILLING EX RUMBLE STRIP

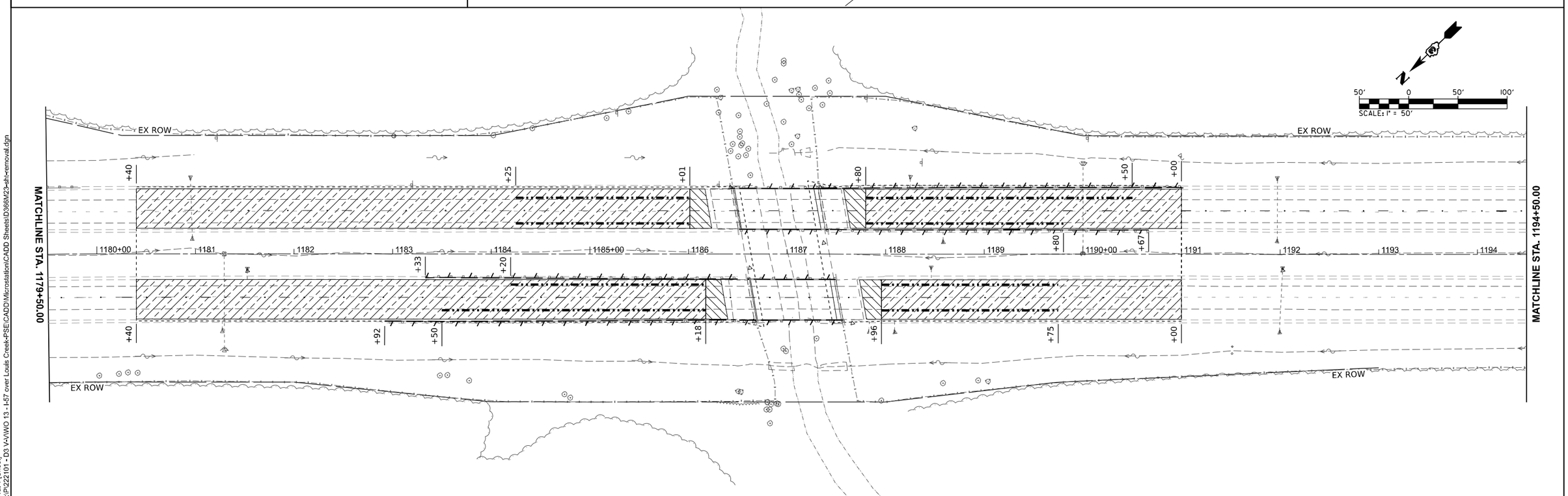

MODEL: Removal 1 [Sheet]
FILE NAME: H:\P222101 - D3 V-V\WO 13 - I-57 over Louis Creek-PSE\CADD\Microstation\CADD Sheets\D368W23-sht-removal.dgn

OATES ASSOCIATES
www.oatesassociates.com
ILLINOIS DESIGN FIRM LICENSE NO.: 184.001115

USER NAME = breanna.frahm	DESIGNED -	REVISED -	
	DRAWN -	REVISED -	
	CHECKED -	REVISED -	
PLOT DATE = 3/20/2025	DATE -	REVISED -	

STATE OF ILLINOIS
DEPARTMENT OF TRANSPORTATION

REMOVAL PLAN

SCALE: 1"=50' | SHEET 1 OF 2 SHEETS | STA. 1164+50.00 R4 TO STA. 1194+50.00 R4

F.A.I. RTE.	SECTION	COUNTY	TOTAL SHEETS	SHEET NO.
57	((38-7B)BR)BR	IROQUOIS	84	30
		CONTRACT NO. 66M23		
		ILLINOIS	FED. AID PROJECT	

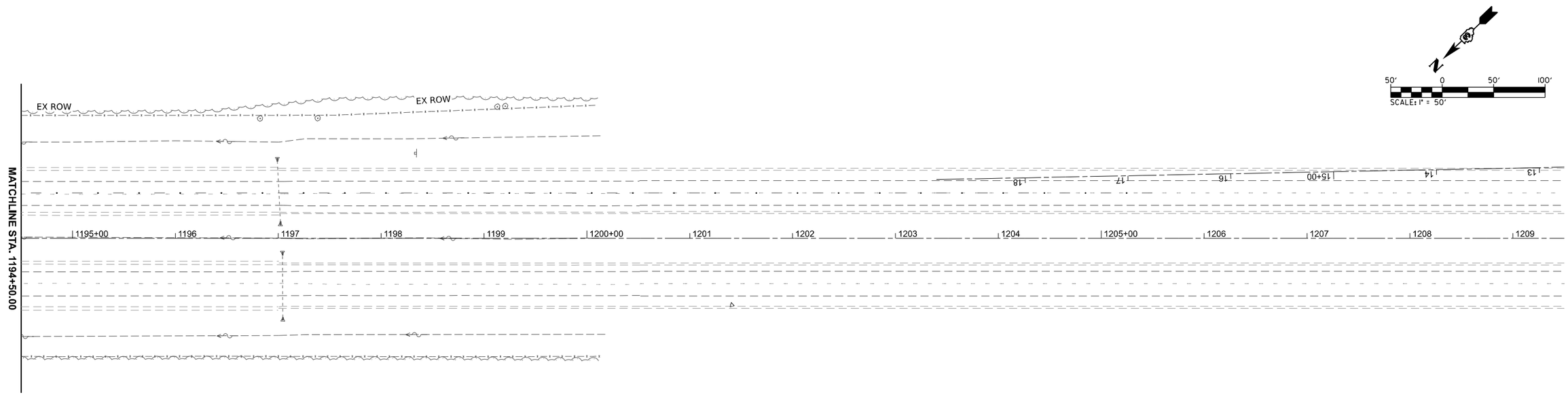

MODEL: Removal 2 [Sheet]
FILE NAME: H:\P222101 - D3 VA\WO 13 - I-57 over Louis Creek-PSE\CADD\Microstation\CADD Sheets\D386W23-sht-removal.dgn

OATES ASSOCIATES
www.oatesassociates.com
ILLINOIS DESIGN FIRM LICENSE NO.: 184.001115

USER NAME = breanna.frahm	DESIGNED -	REVISED -
	DRAWN -	REVISED -
	CHECKED -	REVISED -
PLOT DATE = 3/20/2025	DATE -	REVISED -

STATE OF ILLINOIS
DEPARTMENT OF TRANSPORTATION

REMOVAL PLAN

SCALE: 1"=50' | SHEET 2 OF 2 SHEETS | STA. 1194+50.00 R4 TO STA. 1209+50.00 R4

F.A.I. RTE.	SECTION	COUNTY	TOTAL SHEETS	SHEET NO.
57	((38-7B)BR)BR	IROQUOIS	84	31
		CONTRACT NO. 66M23		
		ILLINOIS	FED. AID PROJECT	

038-0229 & -0230

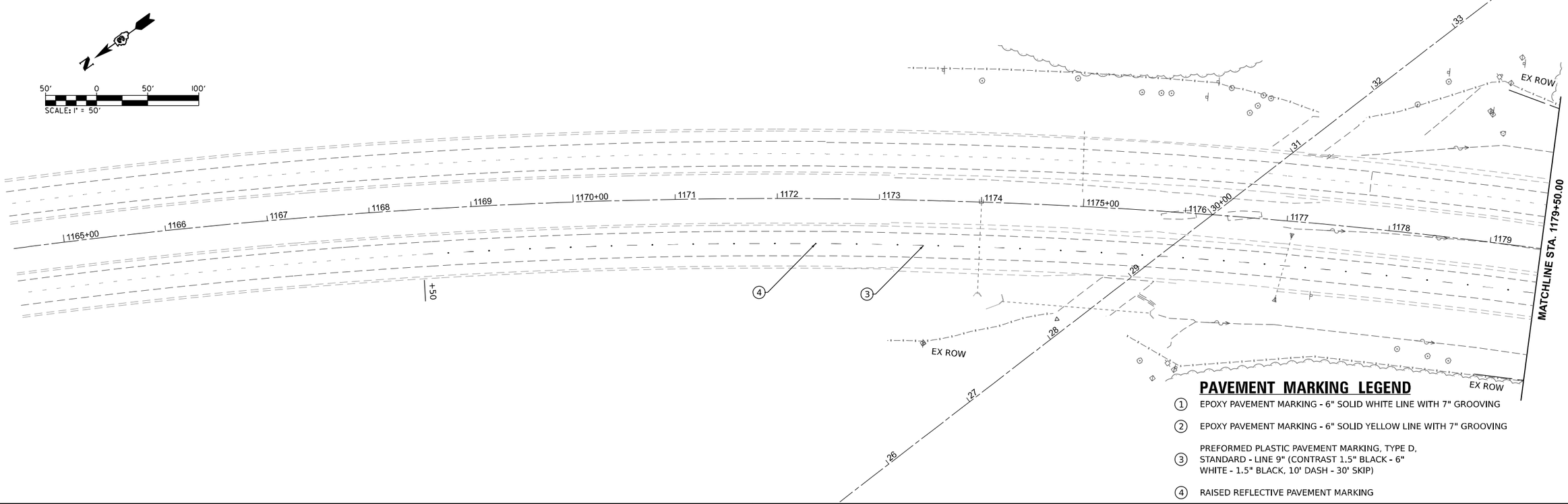

PAVEMENT MARKING LEGEND

1. EPOXY PAVEMENT MARKING - 6" SOLID WHITE LINE WITH 7" GROOVING
2. EPOXY PAVEMENT MARKING - 6" SOLID YELLOW LINE WITH 7" GROOVING
3. PREFORMED PLASTIC PAVEMENT MARKING, TYPE D, STANDARD - LINE 9" (CONTRAST 1.5" BLACK - 6" WHITE - 1.5" BLACK, 10' DASH - 30' SKIP)
4. RAISED REFLECTIVE PAVEMENT MARKING

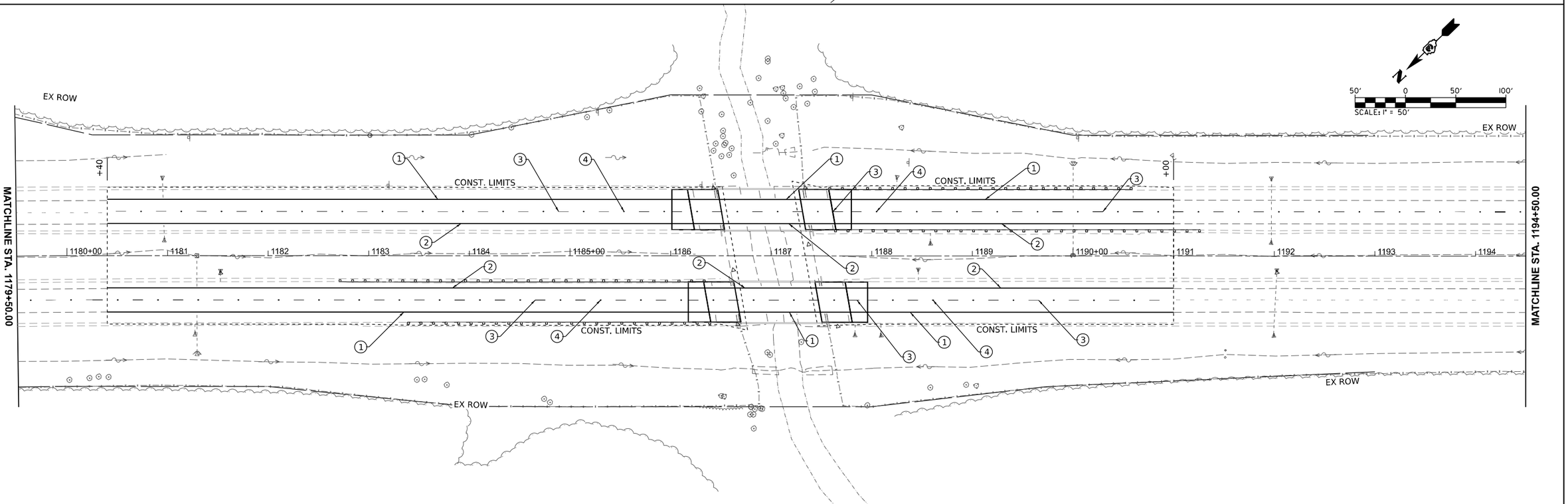

MODEL: PMK 1 [Sheet]
FILE NAME: H:\P222101 - D3 V-A\WO 13 - I-57 over Louis Creek-PSE\CADD\Microstation\CADD Sheets\D366M23-sht-pmk.dgn

OATES ASSOCIATES
www.oatesassociates.com
ILLINOIS DESIGN FIRM LICENSE NO.: 184.001115

USER NAME = breanna.frahm	DESIGNED -	REVISED -	
	DRAWN -	REVISED -	
	CHECKED -	REVISED -	
PLOT DATE = 3/20/2025	DATE -	REVISED -	

STATE OF ILLINOIS
DEPARTMENT OF TRANSPORTATION

PAVEMENT MARKING PLAN

SCALE: 1"=50' | SHEET 1 OF 2 SHEETS | STA. 1164+50.00 R4 TO STA. 1194+50.00 R4

F.A.I. RTE.	SECTION	COUNTY	TOTAL SHEETS	SHEET NO.
57	((38-7B)BR)BR	IROQUOIS	84	32
		CONTRACT NO. 66M23		
		ILLINOIS	FED. AID PROJECT	

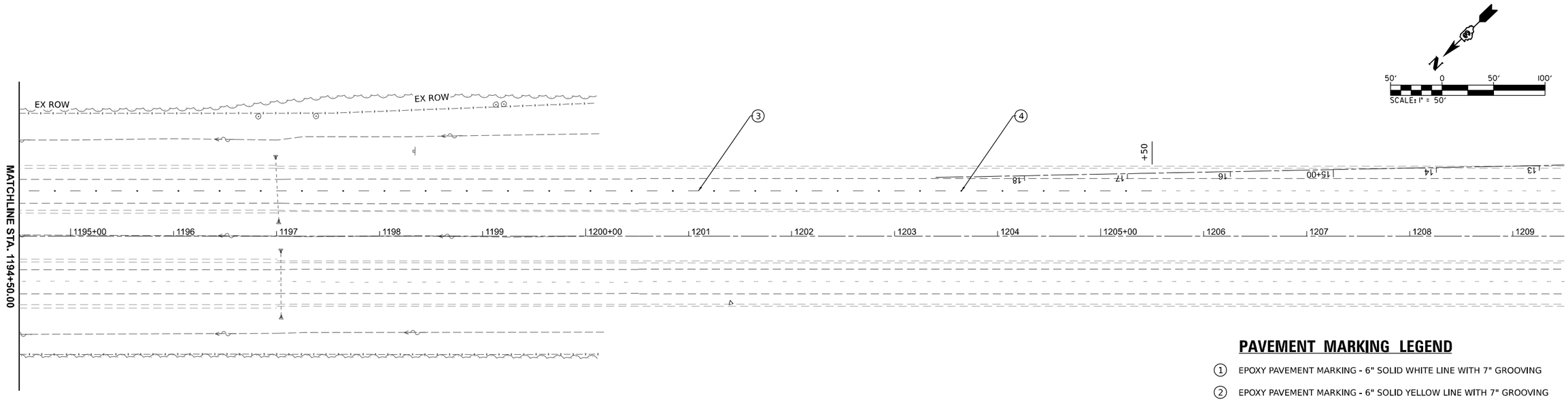

PAVEMENT MARKING LEGEND

1. EPOXY PAVEMENT MARKING - 6" SOLID WHITE LINE WITH 7" GROOVING
2. EPOXY PAVEMENT MARKING - 6" SOLID YELLOW LINE WITH 7" GROOVING
3. PREFORMED PLASTIC PAVEMENT MARKING, TYPE D, STANDARD - LINE 9" (CONTRAST 1.5" BLACK - 6" WHITE - 1.5" BLACK, 10' DASH - 30' SKIP)
4. RAISED REFLECTIVE PAVEMENT MARKING

MODEL: PMK 2 [Sheet]
FILE NAME: H:\P222101 - D3 VA\WO 13 - I-57 over Louis Creek-PSE\CADD\Microstation\CADD Sheets\D386W23-sht-pmk.dgn

OATES ASSOCIATES
www.oatesassociates.com
ILLINOIS DESIGN FIRM LICENSE NO.: 184.001115

USER NAME = breanna.frahm	DESIGNED -	REVISED -
	DRAWN -	REVISED -
	CHECKED -	REVISED -
PLOT DATE = 3/20/2025	DATE -	REVISED -

STATE OF ILLINOIS
DEPARTMENT OF TRANSPORTATION

PAVEMENT MARKING PLAN

SCALE: 1"=50' | SHEET 2 OF 2 SHEETS | STA. 1194+50.00 R4 TO STA. 1209+50.00 R4

F.A.I. RTE.	SECTION	COUNTY	TOTAL SHEETS	SHEET NO.
57	((38-7B)BR)BR	IROQUOIS	84	33
		CONTRACT NO. 66M23		
	ILLINOIS	FED. AID PROJECT		

Bench Mark: BM 443 - Chisled square on southwest wingwall of southbound structure. Sta. 1187+57.4, 68.1' RT., Elev. 685.89.

Existing Structure: S.N. 038-0151 (S.B.) and S.N. 038-0152 (N.B.) were originally built in 1968 as F.A.I. Route 57. Section 38-7B. The longitudinal joint was closed and bituminous overlay with waterproofing membrane system was added in 1976. Expansion joints were replaced and bituminous overlay was replaced with a microsilica overlay in 2000. A 1½" HMA overlay without waterproofing was added to the deck and the inside shoulder concrete railings were replaced with Type 2399 steel railings in 2022 under Contract 66H63. The back to back abutment length is 93'-6" and the out to out deck width is 42'-6". The existing structure consists of a three span 15½" thick continuous cast-in-place slab superstructure supported by concrete stub abutments founded on spread footings and concrete solid wall piers founded on spread footings. Structure is to be removed and replaced.

Traffic Control: One lane of traffic will be maintained by utilizing staged construction.

Salvage: None.

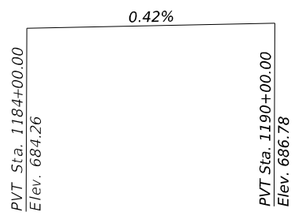

PROFILE GRADE - F.A.I. RTE. 57

(along P.G.L. of N.B. and S.B. roadway)

Up to ¼ inch to be ground off the bridge deck and the bridge approach slabs. The profile grade shows the final elevations after grinding.

DESIGN SCOUR ELEVATION TABLE (S.B.)

Event / Limit State	Design Scour Elevations (ft.) N. Abut.	Pier 1	Pier 2	S. Abut.	Item 113
Q100	680.01	658.80	658.80	680.34	5
Q200	680.01	657.30	657.30	680.34	
Design	680.01	658.80	658.80	680.34	
Check	680.01	657.30	657.30	680.34	

DESIGN SCOUR ELEVATION TABLE (N.B.)

Event / Limit State	Design Scour Elevations (ft.) N. Abut.	Pier 1	Pier 2	S. Abut.	Item 113
Q100	679.91	658.80	658.80	680.24	5
Q200	679.91	657.30	657.30	680.24	
Design	679.91	658.80	658.80	680.24	
Check	679.91	657.30	657.30	680.24	

WATERWAY INFORMATION

Drainage Area = 10.7 sq. mi. Low Grade Elev. 683.73 @ Sta. 1181+38

Flood Event	Freq. Yr.	Q C.F.S.	Opening Ft² Exist.	Opening Ft² Prop.	Nat. H.W.E.	Head - Ft. Exist.	Head - Ft. Prop.	Headwater El. Exist.	Headwater El. Prop.
Ten Year	10	1,590	314	341	678.6	0.7	0.7	679.3	679.3
Design	50	2,550	390	422	680.0	1.2	1.2	681.2	681.1
Base	100	2,980	411	444	680.3	1.5	1.5	681.9	681.8
Scour Check	200	3,420	429	463	680.6	1.9	1.8	682.5	682.4
Max. Calc.	500	4,000	445	480	680.9	2.4	2.3	683.3	683.2

10 Year Velocity Through Existing Bridge = 5.1 ft/s
10 Year Velocity Through Proposed Bridge = 5.1 ft/s

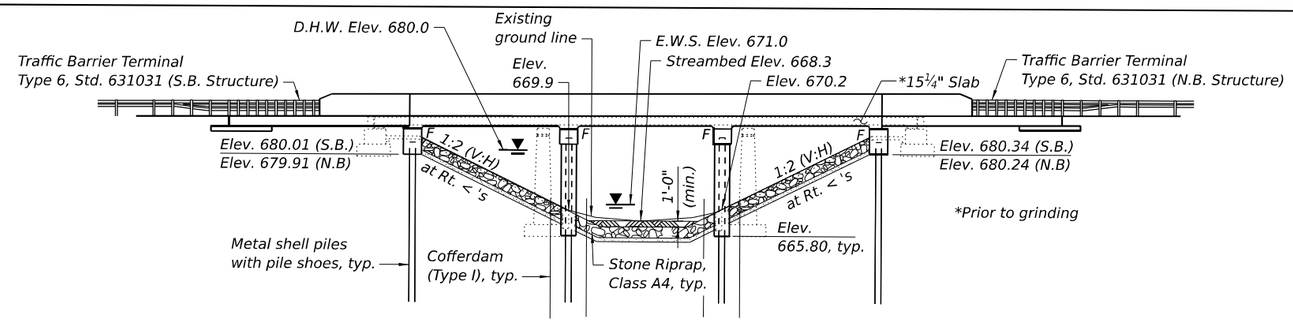

ELEVATION

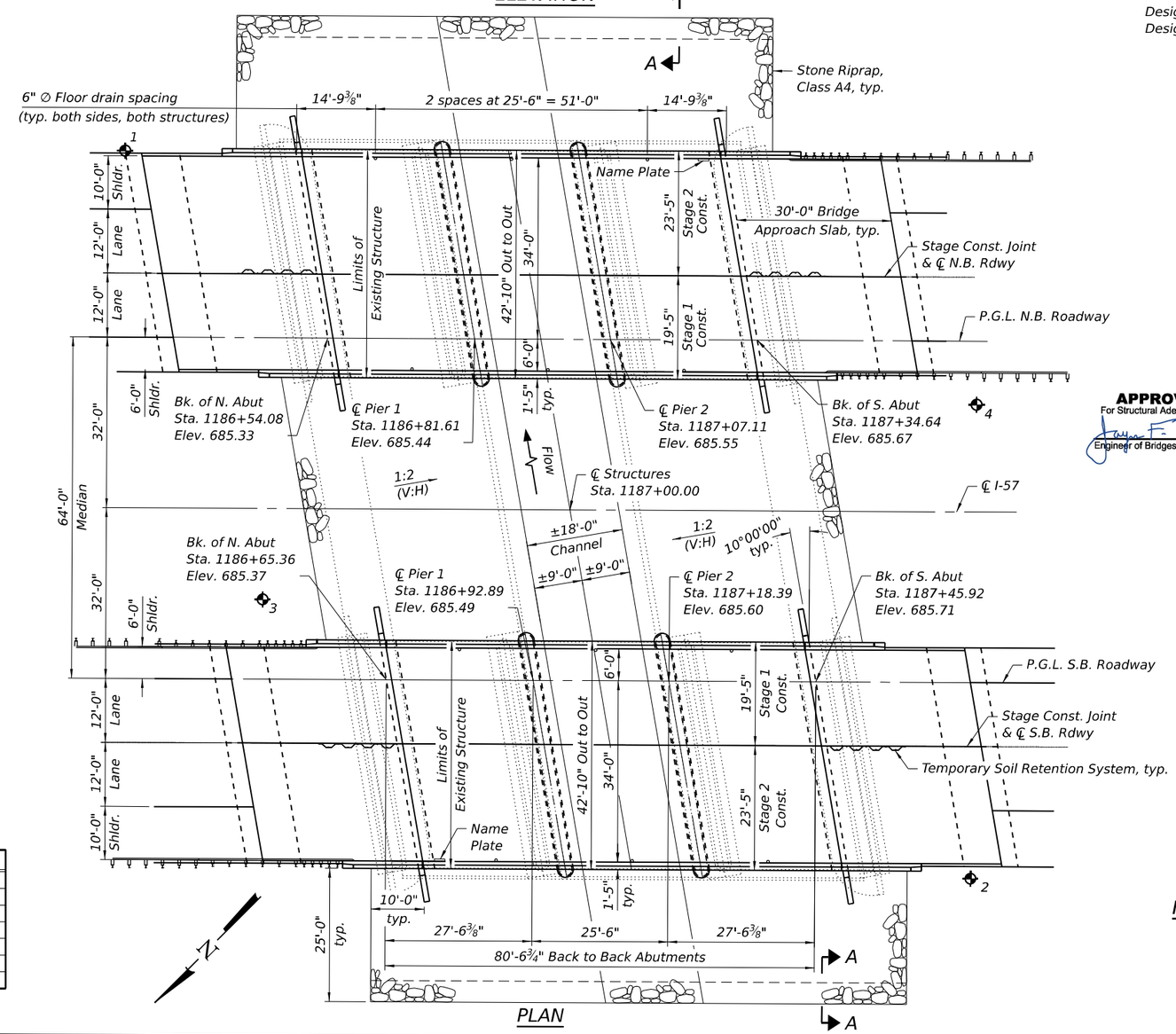

PLAN

LOADING HL-93

Allow 50#/sq. ft. for future wearing surface.

DESIGN SPECIFICATIONS

2020 AASHTO LRFD Bridge Design Specifications, 9th Edition

DESIGN STRESSES

FIELD UNITS

f'c = 3,500 psi
f'c = 4,000 psi (Superstructure)
fy = 60,000 psi (Reinforcement)

SEISMIC DATA

Seismic Performance Zone (SPZ) = 1
Design Spectral Acceleration at 1.0 sec. (SD1) = 0.082g
Design Spectral Acceleration at 0.2 sec. (SDS) = 0.141g
Soil Site Class = C

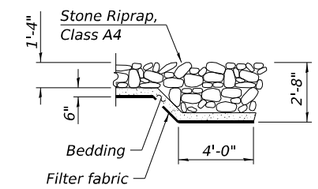

SECTION A-A

APPROVED
For Structural Adequacy Only
Engineer of Bridges & Structures

LICENSED STRUCTURAL ENGINEER
ALEX C BENZ
081-007814
STATE OF ILLINOIS

Signed: Alex C. Benz
Date: 3/11/2025
License Expires: 11/30/2026

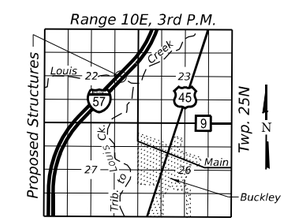

LOCATION SKETCH

GENERAL PLAN & ELEVATION
I-57 OVER LOUIS CREEK
F.A.I. RTE. 57 - SEC. ((38-7B)BR)BR
IROQUOIS COUNTY
STA. 1187+00.00
STRUCTURE NO. 038-0229 (S.B.)
STRUCTURE NO. 038-0230 (N.B.)

MODEL: Default
FILE NAME: O:\2022R3\IDOT\CAD CONNECT\22057.13 IDOT D3 PTB 204-028 WO 13 I-57 over Louis Creek Ph II\CADD Data\Bridge\Plotsheets\038022960230_66M23_001_General Plan and Elevation.dgn
3/11/2025 10:06:29 AM

EFK•Moen
Civil Engineering Design

USER NAME = $USER$	DESIGNED - KRH	REVISED -	
	CHECKED - ACB	REVISED -	
PLOT SCALE =	DRAWN - KRH	REVISED -	
PLOT DATE = 3/11/2025	CHECKED - ACB	REVISED -	

STATE OF ILLINOIS
DEPARTMENT OF TRANSPORTATION

GENERAL PLAN & ELEVATION
STRUCTURE NO. 038-0229 (S.B.) & 038-0230 (N.B.)
SHEET 1 OF 37 SHEETS

F.A.I. RTE.	SECTION	COUNTY	TOTAL SHEETS	SHEET NO.
57	((38-7B)BR)BR	IROQUOIS	84	34

CONTRACT NO. 66M23
ILLINOIS FED. AID PROJECT

GENERAL NOTES

Reinforcement bars designated (E) shall be epoxy coated.

The Contractor shall make allowance for the deflection of forms, shrinkage, and settlement of falsework, in addition to allowance for dead load deflection. Forms for deck slab shall be removed prior to placement of bridge approach slab.

Layout of the slope protection system may be varied to suit ground conditions in the field as directed by the Engineer.

The embankment configuration shown shall be the minimum that must be placed and compacted prior to construction of the abutments.

INDEX OF SHEETS

STA. 1187+00.00
BUILT BY
STATE OF ILLINOIS
F.A.I. RTE. 57 SEC. ((38-7B)BR)BR
LOADING HL-93
STRUCTURE NO. 038-0229

NAME PLATE

See Std. 515001

STA. 1187+00.00
BUILT BY
STATE OF ILLINOIS
F.A.I. RTE. 57 SEC. ((38-7B)BR)BR
LOADING HL-93
STRUCTURE NO. 038-0230

NAME PLATE

See Std. 515001

TOTAL BILL OF MATERIAL

ITEM	UNIT	SUPER	SUB	TOTAL
Stone Riprap, Class A4	Sq. Yd.	1,988		1,988
Filter Fabric	Sq. Yd.	1,988		1,988
Removal of Existing Structures	Each			2
Structure Excavation	Cu. Yd.		191	191
Cofferdam Excavation	Cu. Yd.		360	360
Cofferdam (Type 1) (Location - 1)	Each		1	1
Cofferdam (Type 1) (Location - 2)	Each		1	1
Cofferdam (Type 1) (Location - 3)	Each		1	1
Cofferdam (Type 1) (Location - 4)	Each		1	1
Floor Drains	Each	12		12
Concrete Structures	Cu. Yd.		444.8	444.8
Concrete Superstructure	Cu. Yd.	394.4		394.4
Protective Coat	Sq. Yd.	1,458		1,458
Concrete Superstructure (Approach Slab)	Cu. Yd.	234.0		234.0
Reinforcement Bars, Epoxy Coated	Pound	207,580	43,620	251,200
Bar Splicers	Each	850	348	1,198
Furnishing Metal Shell Piles 14" x 0.25"	Foot		1,871	1,871
Driving Piles	Foot		1,871	1,871
Test Piles Metal Shells	Each		8	8
Pile Shoes	Each		52	52
Name Plates	Each			2
Temporary Soil Retention System	Sq. Ft.		209	209
Granular Backfill for Structures	Cu. Yd.		128	128
Geocomposite Wall Drain	Sq. Yd.		89	89
Pipe Underdrains for Structures 4"	Foot		268	268
Bridge Deck Grooving (Longitudinal)	Sq. Yd.	738		738
Diamond Grinding (Bridge Section)	Sq. Yd.	1,108		1,108

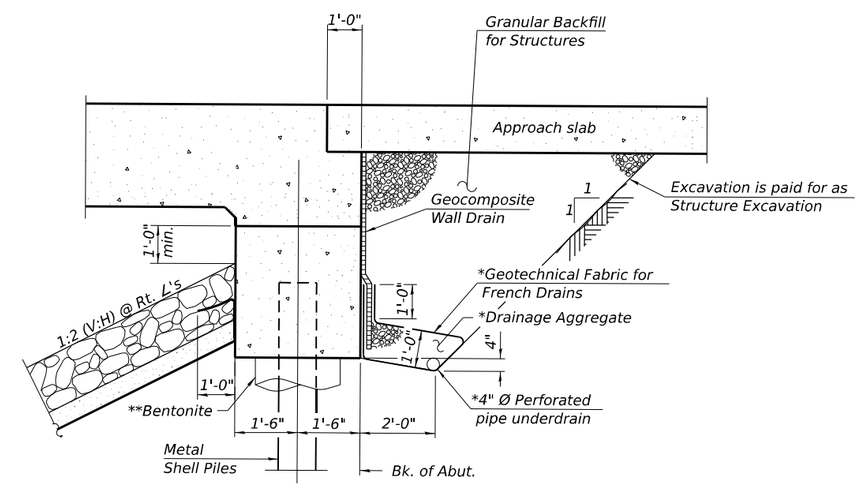

SECTION THRU INTEGRAL ABUTMENT

*Included in the cost of Pipe Underdrains for Structures.
**Piles shall be driven through 2'-0" diameter precored holes extending to elevation 670.00 according to article 512.09(c) of the Standard Specifications except that the void space outside the pile shall be filled with bentonite according to the manufacturer's recommendations to achieve a Qu of 1.5 tsf. Cost included in driving piles.

Note:
All drainage system components shall extend to 2'-0" from the end of each wingwall except an outlet pipe shall extend until intersecting with the side slopes. The pipes shall drain into concrete headwalls. (See Article 601.05 of the Standard Specifications and Highway Standard 601101).

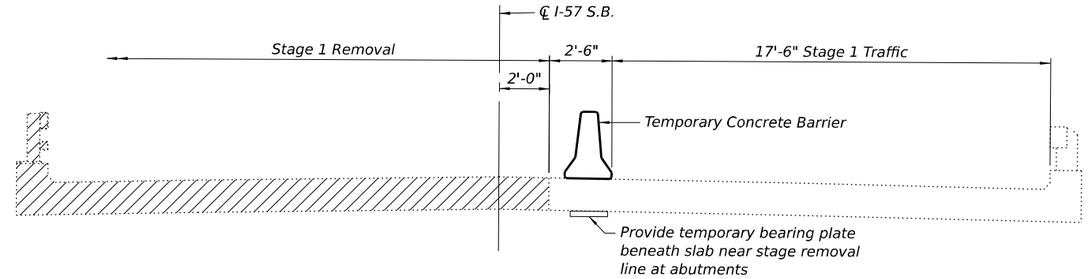

STAGE 1 REMOVAL

(Southbound bridge shown looking South, Northbound bridge similar)

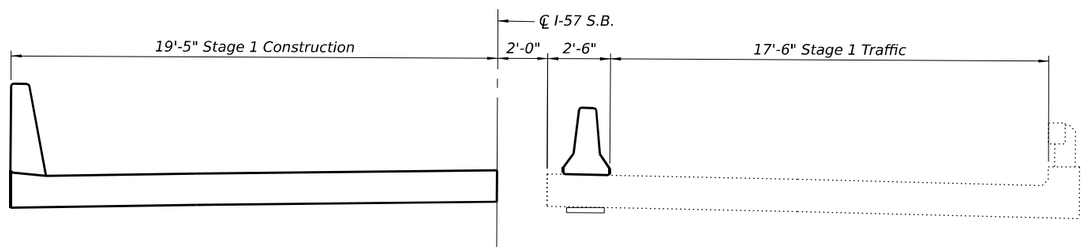

STAGE 1 CONSTRUCTION

(Southbound bridge shown looking South, Northbound bridge similar)

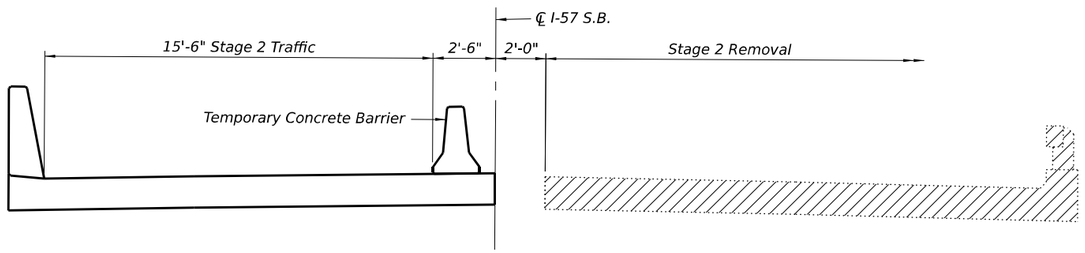

STAGE 2 REMOVAL

(Southbound bridge shown looking South, Northbound bridge similar)

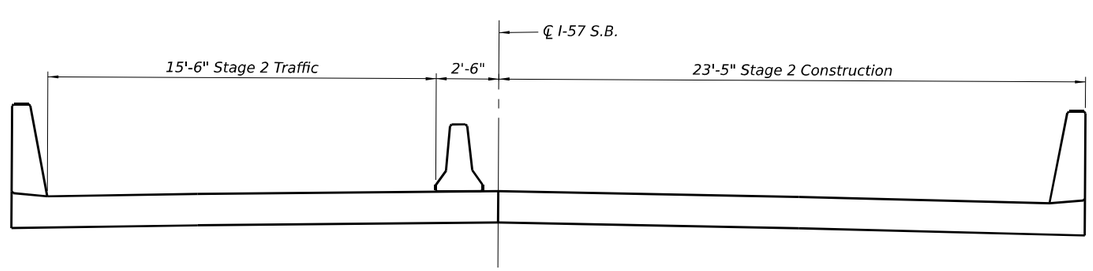

STAGE 2 CONSTRUCTION

(Southbound bridge shown looking South, Northbound bridge similar)

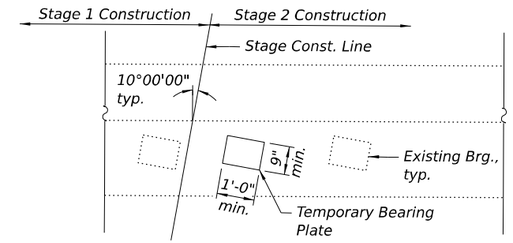

TEMPORARY BEARING PLATE DETAIL

Notes:
Hatched area indicates Removal of Existing Structures.
For quantity of temporary concrete barrier, see Roadway plans.
For details of temporary concrete barrier, see sheet 5 of 37.

MODEL: Default
FILE NAME: O:\2022R3\IDOT\CAD CONNECT\22057.13 IDOT D3 PTB 204-028 WO 13 I-57 over Louis Creek Ph II\CADD Data\Bridge\Plotsheets\0380229\60230_66M23_003_Stage Construction.dgn

EFK•Moen Civil Engineering Design	USER NAME = $USER$	DESIGNED - KRH	REVISED -	STATE OF ILLINOIS DEPARTMENT OF TRANSPORTATION	STAGE CONSTRUCTION DETAILS STRUCTURE NO. 038-0229 (S.B.) & 038-0230 (N.B.)
		CHECKED - ACB	REVISED -		
	PLOT SCALE =	DRAWN - KRH	REVISED -		
	PLOT DATE = 3/11/2025	CHECKED - ACB	REVISED -		SHEET 3 OF 37 SHEETS

F.A.I. RTE.	SECTION	COUNTY	TOTAL SHEETS	SHEET NO.
57	((38-7B)BR)BR	IROQUOIS	84	36
		CONTRACT NO. 66M23		
	ILLINOIS	FED. AID PROJECT		

3/11/2025 10:06:37 AM

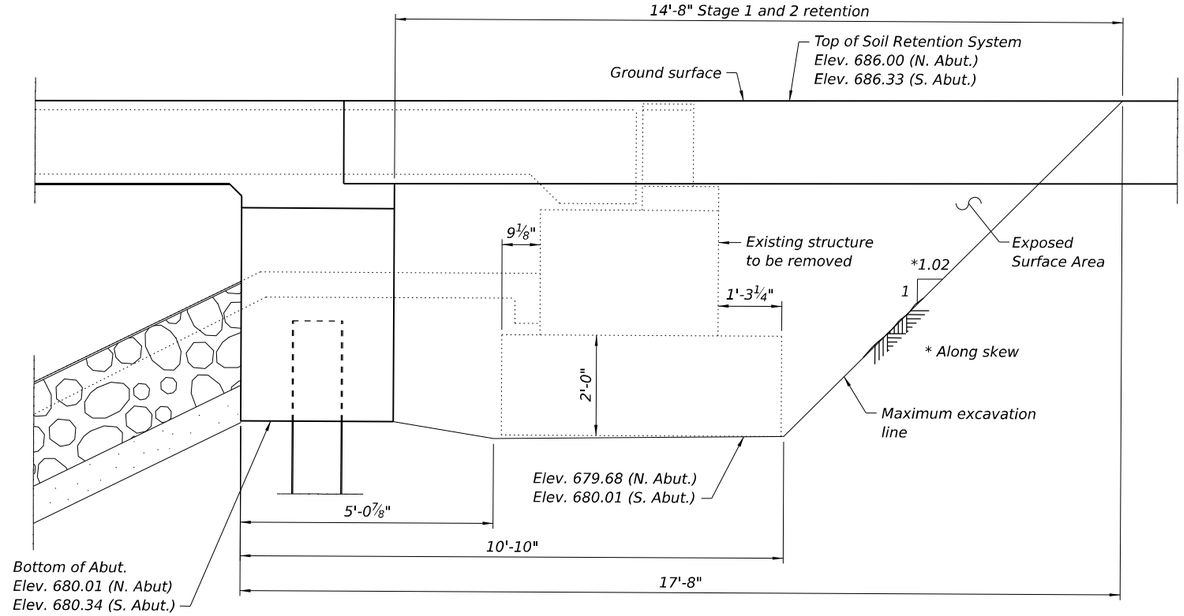

TEMPORARY SOIL RETENTION SYSTEM (S.B.)

(South abutment shown, North abutment similar)

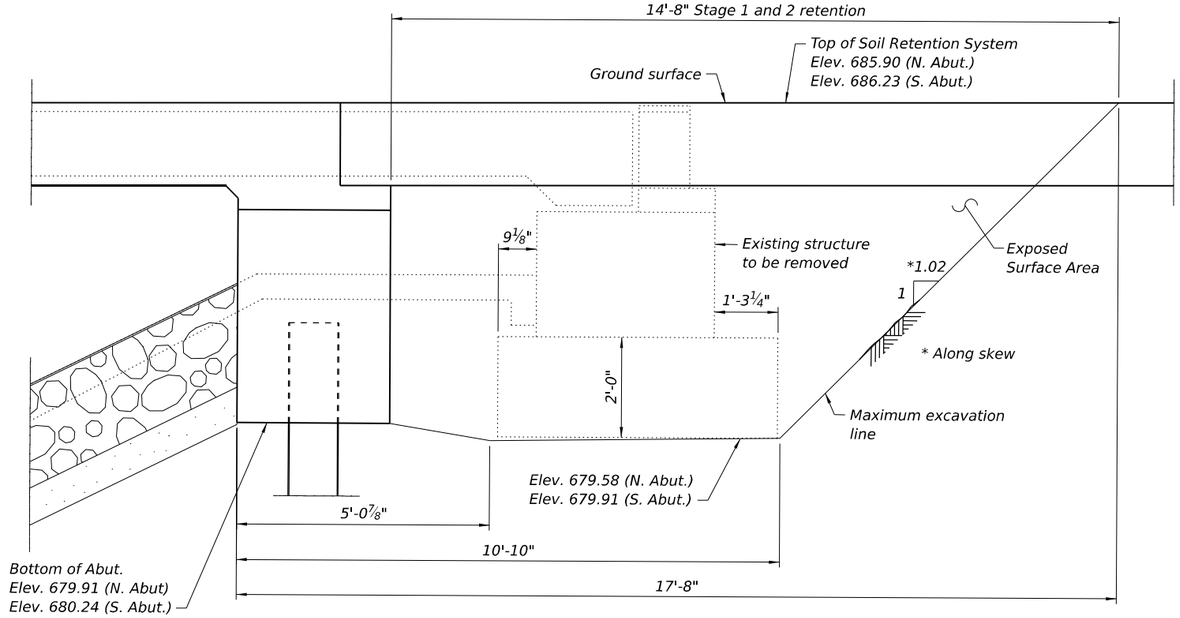

TEMPORARY SOIL RETENTION SYSTEM (N.B.)

(South abutment shown, North abutment similar)

Note:
A cantilevered sheet piling design does not appear feasible and additional members or other retention systems may be necessary. The Contractor shall submit a temporary soil retention system design including plan details and calculations for review and acceptance by the Engineer.

MODEL: Default
FILE NAME: O:\2022R3\IDOT\CAD CONNECT\22057.13 IDOT D3 PTB 204-028 WO 13 I-57 over Louis Creek Ph II\CADD Data\Bridge\Plotsheets\0380229\60230_66M23_004_Temp Soil Retention System.dgn

EFK•Moen Civil Engineering Design	USER NAME = $USER$	DESIGNED - KRH	REVISED -	STATE OF ILLINOIS DEPARTMENT OF TRANSPORTATION	TEMPORARY SOIL RETENTION SYSTEM STRUCTURE NO. 038-0229 (S.B.) & 038-0230 (N.B.)	F.A.I. RTE.	SECTION	COUNTY	TOTAL SHEETS / SHEET NO.
		CHECKED - ACB	REVISED -			57	((38-7B)BR)BR	IROQUOIS	84 / 37
	PLOT SCALE =	DRAWN - KRH	REVISED -					CONTRACT NO. 66M23	
	PLOT DATE = 3/11/2025	CHECKED - ACB	REVISED -		SHEET 4 OF 37 SHEETS		ILLINOIS	FED. AID PROJECT	

3/11/2025 10:06:44 AM

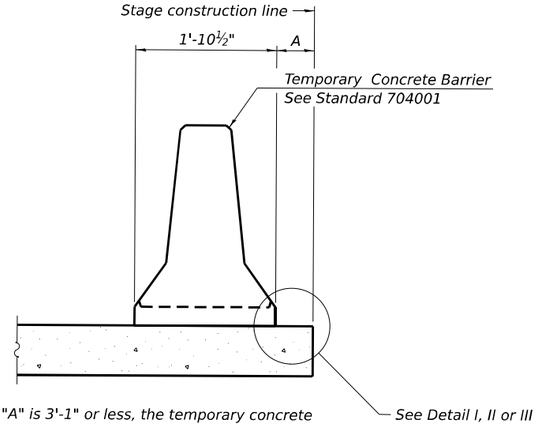

When "A" is 3'-1" or less, the temporary concrete barrier shall be restrained to the new slab according to Detail I, II or III. No restraint is required when "A" is greater than 3'-1".

NEW SLAB OR NEW DECK BEAM

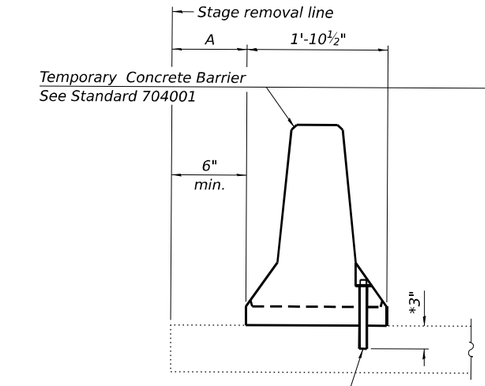

Drill 3-1¼" Ø Holes in existing slab for 1" Ø restraining pins. Traffic side only. Cost of restraining pins are included with Temporary Concrete Barrier. No restraint is required when "A" is greater than 3'-1".

EXISTING SLAB

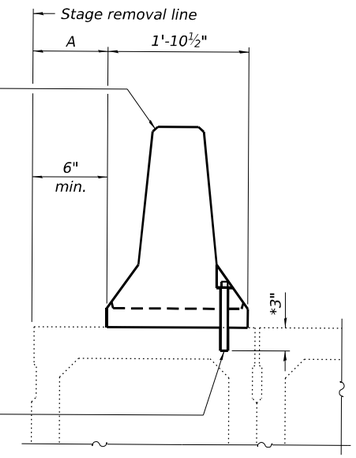

* When hot-mix asphalt wearing surface is present, embedment shall be 3" plus the wearing surface depth.

EXISTING DECK BEAM

SECTIONS THRU SLAB OR DECK BEAM

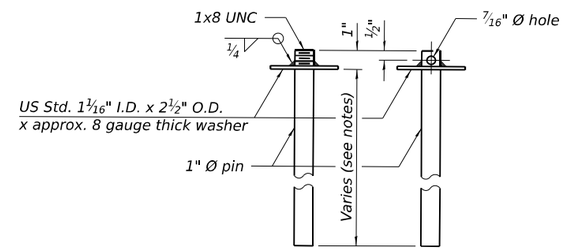

RESTRAINING PIN

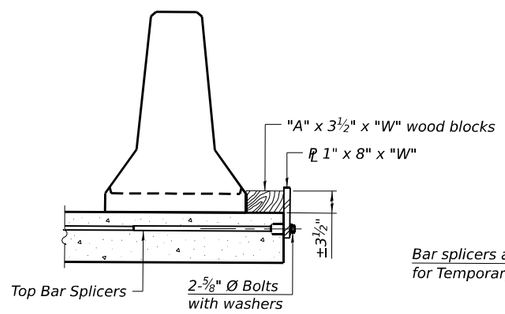

DETAIL I

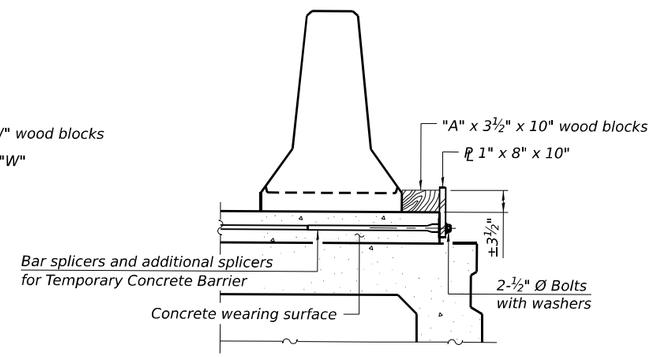

DETAIL II

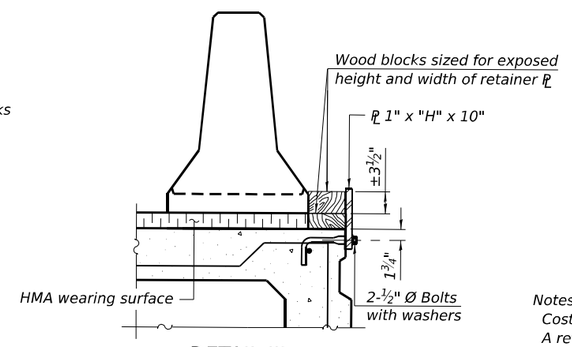

DETAIL III

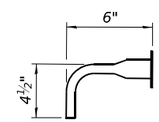

BAR SPLICER FOR #4 BAR - DETAIL III

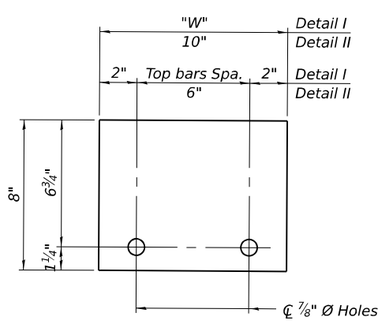

STEEL RETAINER PL 1" x 8" x "W"

(Detail I and II)

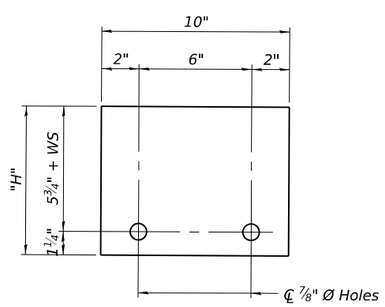

STEEL RETAINER PL 1" x "H" x 10"

(Detail III)

RAILING CRITERIA

NCHRP 350 Test Level	3
Railing Weight (plf)	440

Notes:

Cost of retainer assembly is included with Temporary Concrete Barrier.

A retainer assembly shall be located at the approximate ℄ of each temporary concrete barrier.

The retainer plate shall not be removed until the concrete on the adjacent stage is ready to be poured. For Detail III applications the retainer plate shall not be removed until just prior to placing the adjacent beam.

When the 'A' dimension is less than 1½", the wood block shall be omitted and the barrier shall be placed in direct contact with the steel retainer plate. For deck beam applications the minimum required 'A' distance is 6" to accommodate the shear key clamping device.

Detail I - Installation for a new bridge deck or bridge slab.

Detail II - Installation for a new deck beam with an initial concrete wearing surface. Additional bar splicers shall be provided at 6'-0" centers and paired with the bar splicers of the concrete wearing surface reinforcement to accommodate the installation of the retainer assemblies. The cost of the additional bar splicers is included with the concrete wearing surface.

Detail III - Installation for a new deck beam with no initial wearing surface or with an initial hot-mix asphalt (HMA) wearing surface present. The deck beam directly beneath the temporary concrete barrier shall be fabricated with bar splicer inserts in the side of the beam, as detailed, to accommodate the installation of the retainer assemblies. A pair of bar splicers, 6" apart, shall be placed at 6'-0" centers along the length of the beam. The cost of the bar splicers is included with the deck beam.

R-27 5-15-2023

EFK•Moen Civil Engineering Design

USER NAME = $USER$	DESIGNED - KRH	REVISED -	
	CHECKED - ACB	REVISED -	
PLOT SCALE =	DRAWN - KRH	REVISED -	
PLOT DATE = 3/11/2025	CHECKED - ACB	REVISED -	

STATE OF ILLINOIS
DEPARTMENT OF TRANSPORTATION

TEMPORARY CONCRETE BARRIER
STRUCTURE NO. 038-0229 (S.B.) & 038-0230 (N.B.)

SHEET 5 OF 37 SHEETS

F.A.I. RTE.	SECTION	COUNTY	TOTAL SHEETS	SHEET NO.
57	((38-7B)BR)BR	IROQUOIS	84	38

CONTRACT NO. 66M23

ILLINOIS FED. AID PROJECT

MODEL: Default
FILE NAME: O:\2022R3\IDOT\CAD CONNECT\22057.13 IDOT D3 PTB 204-028 WO 13 I-57 over Louis Creek Ph II\CADD Data\Bridge\Plotsheets\0380229x0230_66M23_005_Temporary Barrier.dgn

3/11/2025 10:06:46 AM

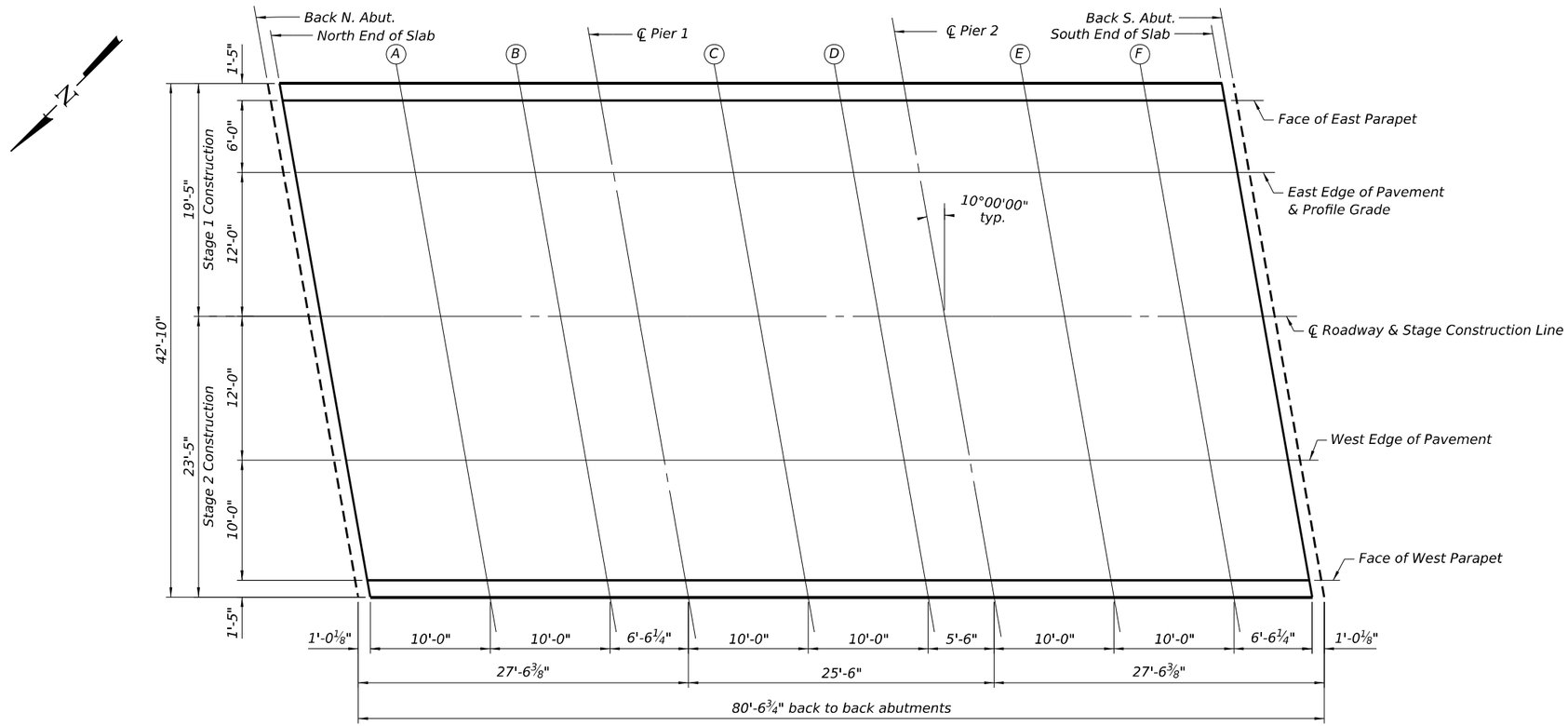

PLAN

Face of East Parapet

Location	Station	Offset	Theoretical Grade Elevations	Theoretical Grade Elevations Adjusted For Dead Load Deflection and Grinding
Back N. Abut.	1186+64.30	-6.00	685.25	685.27
North End of Slab	1186+65.32	-6.00	685.25	685.28
A	1186+75.32	-6.00	685.30	685.32
B	1186+85.32	-6.00	685.34	685.36
℄ Pier 1	1186+91.83	-6.00	685.37	685.39
C	1187+01.83	-6.00	685.41	685.43
D	1187+11.83	-6.00	685.45	685.47
℄ Pier 2	1187+17.33	-6.00	685.47	685.49
E	1187+27.33	-6.00	685.51	685.54
F	1187+37.33	-6.00	685.56	685.58
South End of Slab	1187+43.85	-6.00	685.58	685.60
Back S. Abut.	1187+44.86	-6.00	685.59	685.61

East Edge of Pavement & Profile Grade

Location	Station	Offset	Theoretical Grade Elevations	Theoretical Grade Elevations Adjusted For Dead Load Deflection and Grinding
Back N. Abut.	1186+65.36	0.00	685.37	685.40
North End of Slab	1186+66.38	0.00	685.38	685.40
A	1186+76.38	0.00	685.42	685.45
B	1186+86.38	0.00	685.46	685.49
℄ Pier 1	1186+92.89	0.00	685.49	685.51
C	1187+02.89	0.00	685.53	685.55
D	1187+12.89	0.00	685.57	685.60
℄ Pier 2	1187+18.39	0.00	685.60	685.62
E	1187+28.39	0.00	685.64	685.66
F	1187+38.39	0.00	685.68	685.71
South End of Slab	1187+44.90	0.00	685.71	685.73
Back S. Abut.	1187+45.92	0.00	685.71	685.73

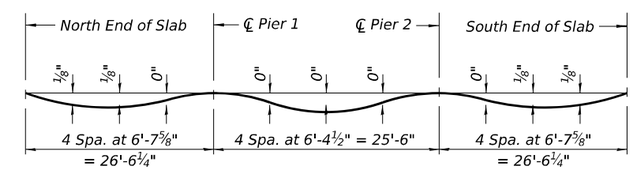

DEAD LOAD DEFLECTION DIAGRAM

(Includes weight of concrete only.)

Note:
The above deflections are not to be used in the field if the engineer is working from the grade elevations and adjusted for dead load deflections and grinding as shown on sheets 6 and 7 of 37.

℄ Roadway & Stage Construction Line

Location	Station	Offset	Theoretical Grade Elevations	Theoretical Grade Elevations Adjusted For Dead Load Deflection and Grinding
Back N. Abut.	1186+67.48	12.00	685.56	685.58
North End of Slab	1186+68.49	12.00	685.57	685.59
A	1186+78.49	12.00	685.61	685.64
B	1186+88.49	12.00	685.65	685.68
℄ Pier 1	1186+95.01	12.00	685.68	685.70
C	1187+05.01	12.00	685.72	685.74
D	1187+15.01	12.00	685.76	685.78
℄ Pier 2	1187+20.51	12.00	685.79	685.81
E	1187+30.51	12.00	685.83	685.85
F	1187+40.51	12.00	685.87	685.90
South End of Slab	1187+47.02	12.00	685.90	685.92
Back S. Abut.	1187+48.04	12.00	685.90	685.92

West Edge of Pavement

Location	Station	Offset	Theoretical Grade Elevations	Theoretical Grade Elevations Adjusted For Dead Load Deflection and Grinding
Back N. Abut.	1186+69.59	24.00	685.39	685.41
North End of Slab	1186+70.61	24.00	685.40	685.42
A	1186+80.61	24.00	685.44	685.47
B	1186+90.61	24.00	685.48	685.50
℄ Pier 1	1186+97.12	24.00	685.51	685.53
C	1187+07.12	24.00	685.55	685.57
D	1187+17.12	24.00	685.59	685.61
℄ Pier 2	1187+22.62	24.00	685.62	685.64
E	1187+32.62	24.00	685.66	685.68
F	1187+42.62	24.00	685.70	685.72
South End of Slab	1187+49.14	24.00	685.73	685.75
Back S. Abut.	1187+50.15	24.00	685.73	685.75

Face of West Parapet

Location	Station	Offset	Theoretical Grade Elevations	Theoretical Grade Elevations Adjusted For Dead Load Deflection and Grinding
Back N. Abut.	1186+71.36	34.00	685.20	685.22
North End of Slab	1186+72.37	34.00	685.20	685.22
A	1186+82.37	34.00	685.25	685.27
B	1186+92.37	34.00	685.29	685.31
℄ Pier 1	1186+98.89	34.00	685.32	685.34
C	1187+08.89	34.00	685.36	685.38
D	1187+18.89	34.00	685.40	685.42
℄ Pier 2	1187+24.39	34.00	685.42	685.44
E	1187+34.39	34.00	685.46	685.49
F	1187+44.39	34.00	685.51	685.53
South End of Slab	1187+50.90	34.00	685.53	685.55
Back S. Abut.	1187+51.92	34.00	685.54	685.56

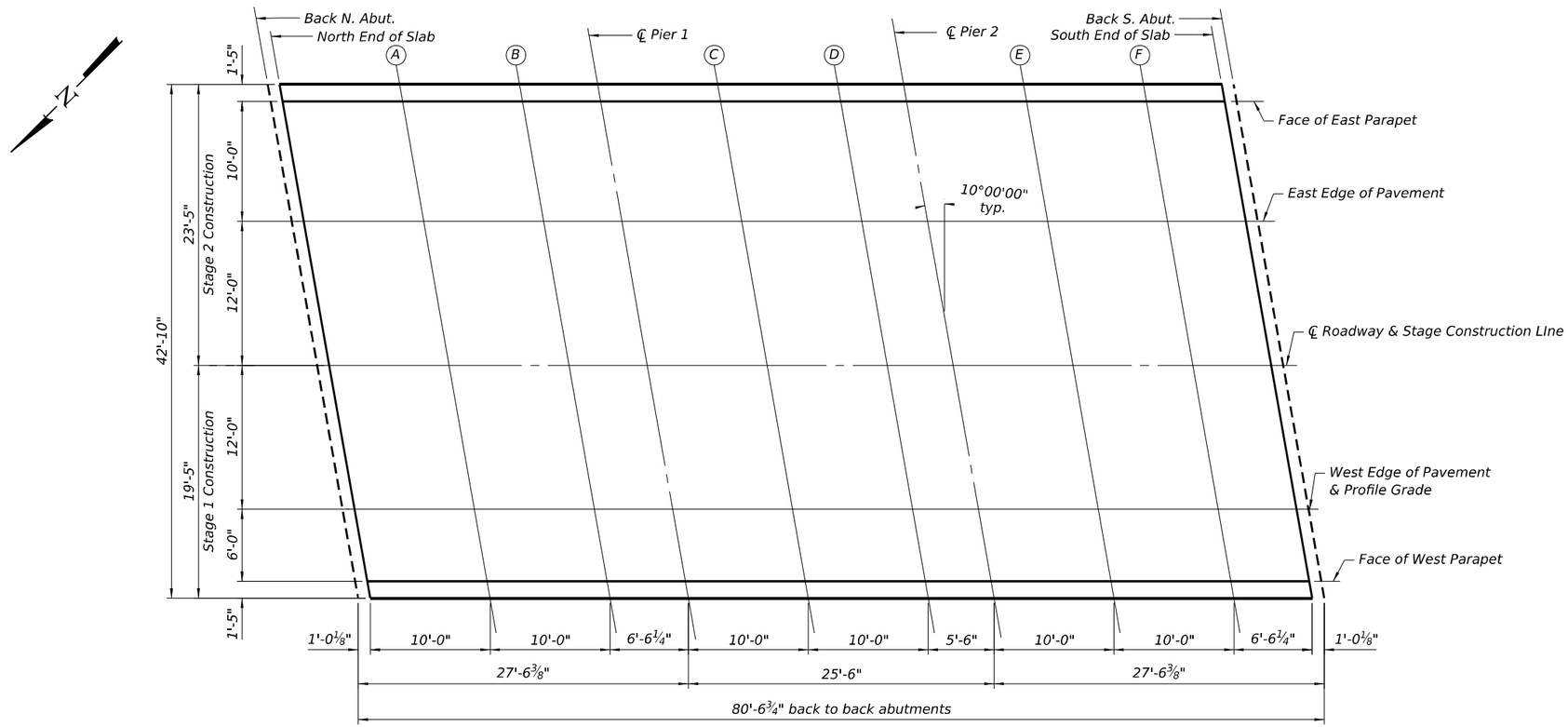

PLAN

Face of East Parapet

Location	Station	Offset	Theoretical Grade Elevations	Theoretical Grade Elevations Adjusted For Dead Load Deflection and Grinding
Back N. Abut.	1186+48.08	-34.00	685.10	685.12
North End of Slab	1186+49.10	-34.00	685.11	685.13
A	1186+59.10	-34.00	685.15	685.18
B	1186+69.10	-34.00	685.19	685.21
℄ Pier 1	1186+75.61	-34.00	685.22	685.24
C	1186+85.61	-34.00	685.26	685.28
D	1186+95.61	-34.00	685.30	685.32
℄ Pier 2	1187+01.11	-34.00	685.32	685.35
E	1187+11.11	-34.00	685.37	685.39
F	1187+21.11	-34.00	685.41	685.43
South End of Slab	1187+27.63	-34.00	685.44	685.46
Back S. Abut.	1187+28.64	-34.00	685.44	685.46

East Edge of Pavement

Location	Station	Offset	Theoretical Grade Elevations	Theoretical Grade Elevations Adjusted For Dead Load Deflection and Grinding
Back N. Abut.	1186+49.85	-24.00	685.31	685.33
North End of Slab	1186+50.86	-24.00	685.31	685.33
A	1186+60.86	-24.00	685.36	685.38
B	1186+70.86	-24.00	685.40	685.42
℄ Pier 1	1186+77.38	-24.00	685.42	685.45
C	1186+87.38	-24.00	685.47	685.49
D	1186+97.38	-24.00	685.51	685.53
℄ Pier 2	1187+02.88	-24.00	685.53	685.55
E	1187+12.88	-24.00	685.57	685.60
F	1187+22.88	-24.00	685.62	685.64
South End of Slab	1187+29.39	-24.00	685.64	685.66
Back S. Abut.	1187+30.41	-24.00	685.65	685.67

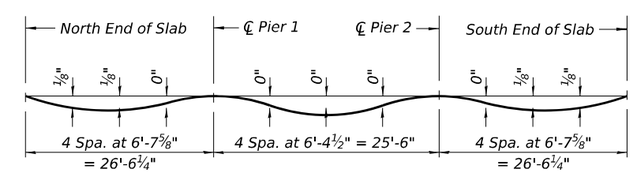

DEAD LOAD DEFLECTION DIAGRAM

(Includes weight of concrete only.)

Note:
The above deflections are not to be used in the field if the engineer is working from the grade elevations and adjusted for dead load deflections and grinding as shown on sheets 8 and 9 of 37.

MODEL: Default
FILE NAME: O:\2022R3\IDOTCAD CONNECT\22057.13 IDOT D3 PTB 204-028 WO 13 I-57 over Louis Creek Ph II\CADD Data\Bridge\Plotsheets\038022SK0230_66M23_008_Slab Elevations.dgn
3/11/2025 10:07:09 AM

EFK•Moen
Civil Engineering Design

USER NAME = $USER$	DESIGNED - KRH	REVISED -	
	CHECKED - ACB	REVISED -	
PLOT SCALE =	DRAWN - KRH	REVISED -	
PLOT DATE = 3/11/2025	CHECKED - ACB	REVISED -	

STATE OF ILLINOIS
DEPARTMENT OF TRANSPORTATION

TOP OF SLAB ELEVATIONS
STRUCTURE NO. 038-0230 (N.B.)

SHEET 8 OF 37 SHEETS

F.A.I. RTE.	SECTION	COUNTY	TOTAL SHEETS	SHEET NO.
57	((38-7B)BR)BR	IROQUOIS	84	41

CONTRACT NO. 66M23
ILLINOIS FED. AID PROJECT

℄ Roadway & Stage Construction Line

Location	Station	Offset	Theoretical Grade Elevations	Theoretical Grade Elevations Adjusted For Dead Load Deflection and Grinding
Back N. Abut.	1186+51.96	-12.00	685.50	685.52
North End of Slab	1186+52.98	-12.00	685.50	685.52
A	1186+62.98	-12.00	685.54	685.57
B	1186+72.98	-12.00	685.59	685.61
℄ Pier 1	1186+79.49	-12.00	685.61	685.63
C	1186+89.49	-12.00	685.66	685.68
D	1186+99.49	-12.00	685.70	685.72
℄ Pier 2	1187+04.99	-12.00	685.72	685.74
E	1187+14.99	-12.00	685.76	685.79
F	1187+24.99	-12.00	685.80	685.83
South End of Slab	1187+31.51	-12.00	685.83	685.85
Back S. Abut.	1187+32.52	-12.00	685.84	685.86

West Edge of Pavement & Profile Grade

Location	Station	Offset	Theoretical Grade Elevations	Theoretical Grade Elevations Adjusted For Dead Load Deflection and Grinding
Back N. Abut.	1186+54.08	0.00	685.33	685.35
North End of Slab	1186+55.10	0.00	685.33	685.35
A	1186+65.10	0.00	685.37	685.40
B	1186+75.10	0.00	685.42	685.44
℄ Pier 1	1186+81.61	0.00	685.44	685.46
C	1186+91.61	0.00	685.48	685.51
D	1187+01.61	0.00	685.53	685.55
℄ Pier 2	1187+07.11	0.00	685.55	685.57
E	1187+17.11	0.00	685.59	685.62
F	1187+27.11	0.00	685.63	685.66
South End of Slab	1187+33.62	0.00	685.66	685.68
Back S. Abut.	1187+34.64	0.00	685.67	685.69

Face of West Parapet

Location	Station	Offset	Theoretical Grade Elevations	Theoretical Grade Elevations Adjusted For Dead Load Deflection and Grinding
Back N. Abut.	1186+55.14	6.00	685.21	685.23
North End of Slab	1186+56.15	6.00	685.22	685.24
A	1186+66.15	6.00	685.26	685.29
B	1186+76.15	6.00	685.30	685.32
℄ Pier 1	1186+82.67	6.00	685.33	685.35
C	1186+92.67	6.00	685.37	685.39
D	1187+02.67	6.00	685.41	685.43
℄ Pier 2	1187+08.17	6.00	685.43	685.46
E	1187+18.17	6.00	685.48	685.50
F	1187+28.17	6.00	685.52	685.54
South End of Slab	1187+34.68	6.00	685.55	685.57
Back S. Abut.	1187+35.70	6.00	685.55	685.57

East Edge of Shoulder

Location	Station	Offset	Theoretical Grade Elevations	Theoretical Grade Elevations Adjusted For Grinding
North End of N. Appr. Slab	1186+35.32	-6.00	685.13	685.15
A1	1186+45.32	-6.00	685.17	685.19
A2	1186+55.32	-6.00	685.21	685.23
South End of N. Appr. Slab	1186+65.32	-6.00	685.25	685.27

East Edge of Pavement & Profile Grade

Location	Station	Offset	Theoretical Grade Elevations	Theoretical Grade Elevations Adjusted For Grinding
North End of N. Appr. Slab	1186+36.38	0.00	685.25	685.27
A1	1186+46.38	0.00	685.29	685.31
A2	1186+56.38	0.00	685.34	685.36
South End of N. Appr. Slab	1186+66.38	0.00	685.38	685.40

℄ Roadway & Stage Construction Line

Location	Station	Offset	Theoretical Grade Elevations	Theoretical Grade Elevations Adjusted For Grinding
North End of N. Appr. Slab	1186+38.49	12.00	685.44	685.46
A1	1186+48.49	12.00	685.48	685.50
A2	1186+58.49	12.00	685.53	685.55
South End of N. Appr. Slab	1186+68.49	12.00	685.57	685.59

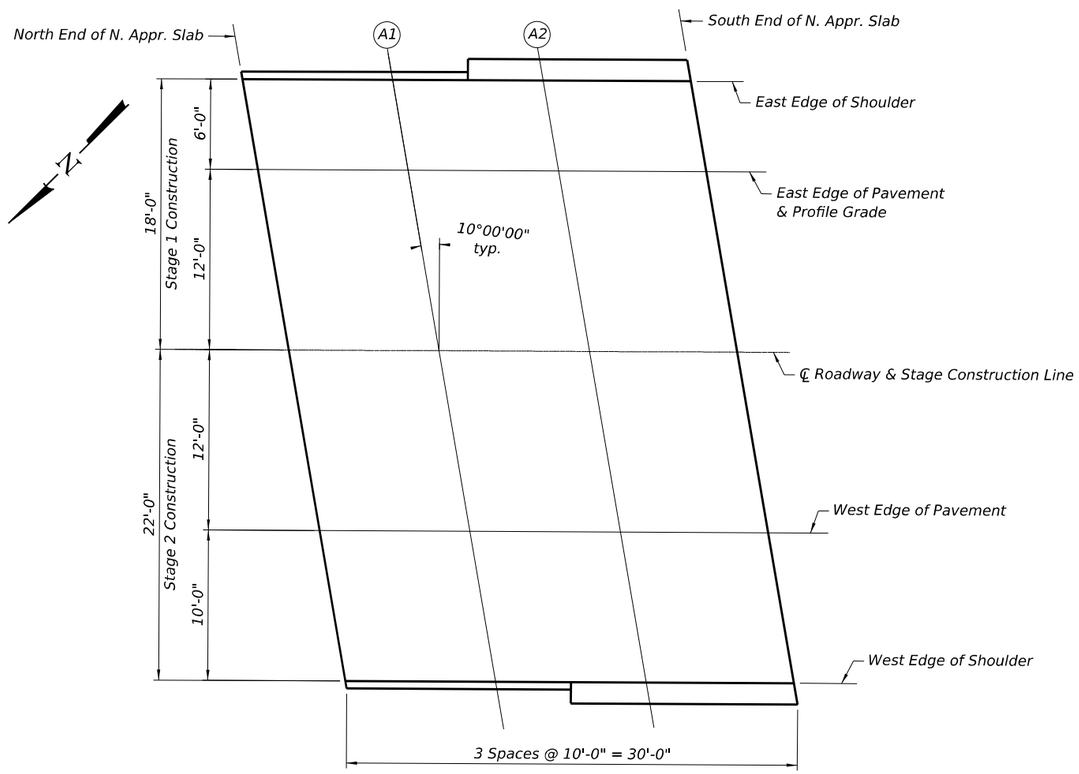

PLAN

West Edge of Pavement

Location	Station	Offset	Theoretical Grade Elevations	Theoretical Grade Elevations Adjusted For Grinding
North End of N. Appr. Slab	1186+40.61	24.00	685.27	685.29
A1	1186+50.61	24.00	685.31	685.33
A2	1186+60.61	24.00	685.35	685.37
South End of N. Appr. Slab	1186+70.61	24.00	685.40	685.42

West Edge of Shoulder

Location	Station	Offset	Theoretical Grade Elevations	Theoretical Grade Elevations Adjusted For Grinding
North End of N. Appr. Slab	1186+42.37	34.00	685.08	685.10
A1	1186+52.37	34.00	685.12	685.14
A2	1186+62.37	34.00	685.16	685.18
South End of N. Appr. Slab	1186+72.37	34.00	685.20	685.22

East Edge of Shoulder

Location	Station	Offset	Theoretical Grade Elevations	Theoretical Grade Elevations Adjusted For Grinding
North End of S. Appr. Slab	1187+43.85	-6.00	685.58	685.60
A3	1187+53.85	-6.00	685.63	685.65
A4	1187+63.85	-6.00	685.67	685.69
South End of S. Appr. Slab	1187+73.85	-6.00	685.71	685.73

East Edge of Pavement & Profile Grade

Location	Station	Offset	Theoretical Grade Elevations	Theoretical Grade Elevations Adjusted For Grinding
North End of S. Appr. Slab	1187+44.90	0.00	685.71	685.73
A3	1187+54.90	0.00	685.75	685.77
A4	1187+64.90	0.00	685.79	685.81
South End of S. Appr. Slab	1187+74.90	0.00	685.83	685.85

℄ Roadway & Stage Construction Line

Location	Station	Offset	Theoretical Grade Elevations	Theoretical Grade Elevations Adjusted For Grinding
North End of S. Appr. Slab	1187+47.02	12.00	685.90	685.92
A3	1187+57.02	12.00	685.94	685.96
A4	1187+67.02	12.00	685.98	686.00
South End of S. Appr. Slab	1187+77.02	12.00	686.02	686.04

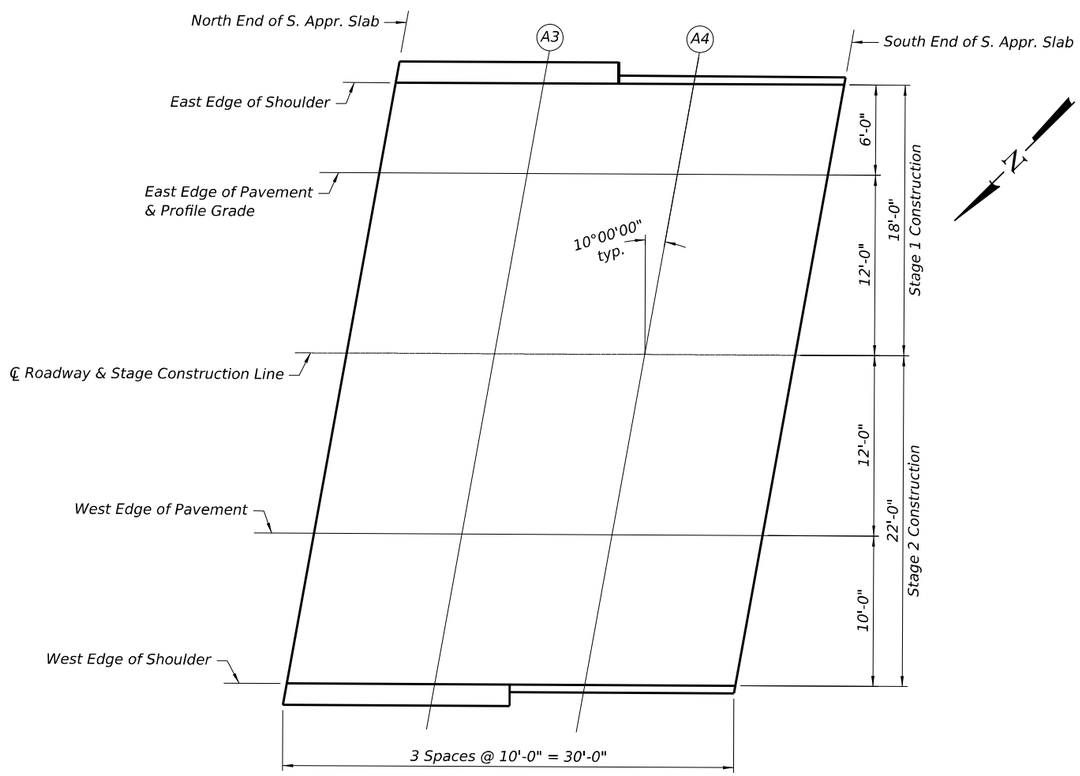

PLAN

West Edge of Pavement

Location	Station	Offset	Theoretical Grade Elevations	Theoretical Grade Elevations Adjusted For Grinding
North End of S. Appr. Slab	1187+49.14	24.00	685.73	685.75
A3	1187+59.14	24.00	685.77	685.79
A4	1187+69.14	24.00	685.81	685.83
South End of S. Appr. Slab	1187+79.14	24.00	685.85	685.87

West Edge of Shoulder

Location	Station	Offset	Theoretical Grade Elevations	Theoretical Grade Elevations Adjusted For Grinding
North End of S. Appr. Slab	1187+50.90	34.00	685.53	685.55
A3	1187+60.90	34.00	685.58	685.60
A4	1187+70.90	34.00	685.62	685.64
South End of S. Appr. Slab	1187+80.90	34.00	685.66	685.68

East Edge of Shoulder

Location	Station	Offset	Theoretical Grade Elevations	Theoretical Grade Elevations Adjusted For Grinding
North End of N. Appr. Slab	1186+19.10	-34.00	684.98	685.00
A1	1186+29.10	-34.00	685.02	685.04
A2	1186+39.10	-34.00	685.06	685.08
South End of N. Appr. Slab	1186+49.10	-34.00	685.11	685.13

East Edge of Pavement

Location	Station	Offset	Theoretical Grade Elevations	Theoretical Grade Elevations Adjusted For Grinding
North End of N. Appr. Slab	1186+20.86	-24.00	685.19	685.21
A1	1186+30.86	-24.00	685.23	685.25
A2	1186+40.86	-24.00	685.27	685.29
South End of N. Appr. Slab	1186+50.86	-24.00	685.31	685.33

℄ Roadway & Stage Construction Line

Location	Station	Offset	Theoretical Grade Elevations	Theoretical Grade Elevations Adjusted For Grinding
North End of N. Appr. Slab	1186+22.98	-12.00	685.38	685.40
A1	1186+32.98	-12.00	685.42	685.44
A2	1186+42.98	-12.00	685.46	685.48
South End of N. Appr. Slab	1186+52.98	-12.00	685.50	685.52

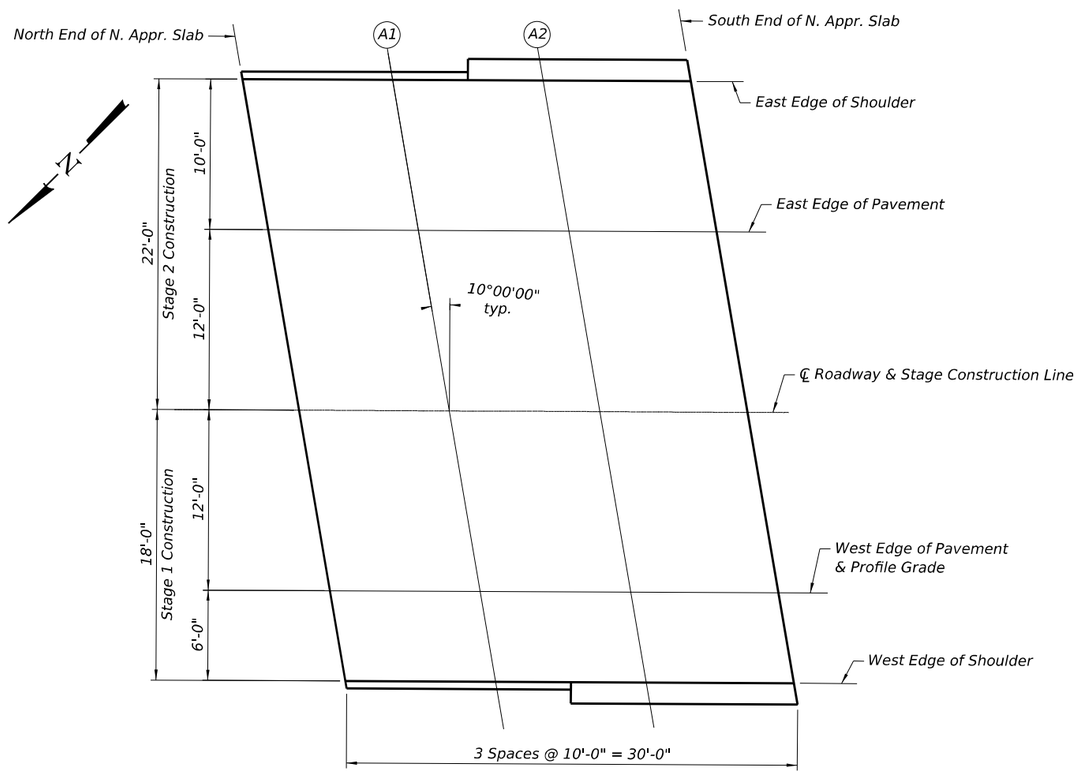

PLAN

West Edge of Pavement & Profile Grade

Location	Station	Offset	Theoretical Grade Elevations	Theoretical Grade Elevations Adjusted For Grinding
North End of N. Appr. Slab	1186+25.10	0.00	685.21	685.23
A1	1186+35.10	0.00	685.25	685.27
A2	1186+45.10	0.00	685.29	685.31
South End of N. Appr. Slab	1186+55.10	0.00	685.33	685.35

West Edge of Shoulder

Location	Station	Offset	Theoretical Grade Elevations	Theoretical Grade Elevations Adjusted For Grinding
North End of N. Appr. Slab	1186+26.15	6.00	685.09	685.11
A1	1186+36.15	6.00	685.13	685.15
A2	1186+46.15	6.00	685.17	685.19
South End of N. Appr. Slab	1186+56.15	6.00	685.22	685.24

East Edge of Shoulder

Location	Station	Offset	Theoretical Grade Elevations	Theoretical Grade Elevations Adjusted For Grinding
North End of S. Appr. Slab	1187+27.63	-34.00	685.44	685.46
A3	1187+37.63	-34.00	685.48	685.50
A4	1187+47.63	-34.00	685.52	685.54
South End of S. Appr. Slab	1187+57.63	-34.00	685.56	685.58

East Edge of Pavement

Location	Station	Offset	Theoretical Grade Elevations	Theoretical Grade Elevations Adjusted For Grinding
North End of S. Appr. Slab	1187+29.39	-24.00	685.64	685.66
A3	1187+39.39	-24.00	685.69	685.71
A4	1187+49.39	-24.00	685.73	685.75
South End of S. Appr. Slab	1187+59.39	-24.00	685.77	685.79

℄ Roadway & Stage Construction Line

Location	Station	Offset	Theoretical Grade Elevations	Theoretical Grade Elevations Adjusted For Grinding
North End of S. Appr. Slab	1187+31.51	-12.00	685.83	685.85
A3	1187+41.51	-12.00	685.87	685.89
A4	1187+51.51	-12.00	685.92	685.94
South End of S. Appr. Slab	1187+61.51	-12.00	685.96	685.98

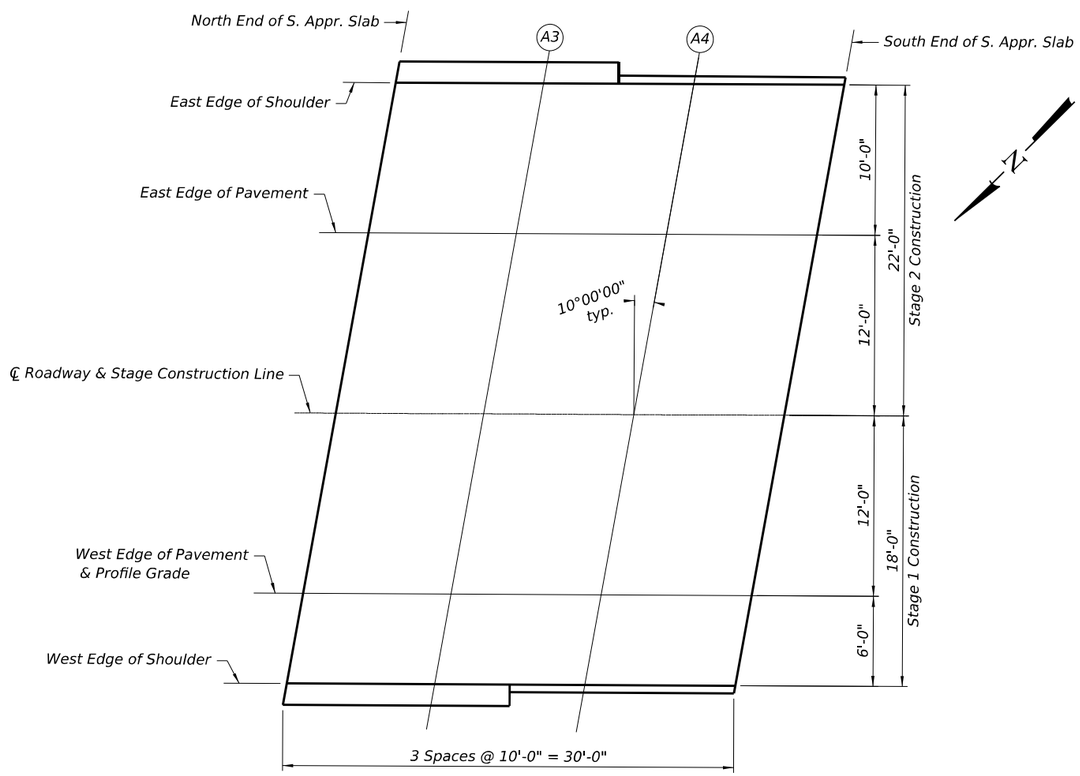

PLAN

West Edge of Pavement & Profile Grade

Location	Station	Offset	Theoretical Grade Elevations	Theoretical Grade Elevations Adjusted For Grinding
North End of S. Appr. Slab	1187+33.62	0.00	685.66	685.68
A3	1187+43.62	0.00	685.70	685.72
A4	1187+53.62	0.00	685.75	685.77
South End of S. Appr. Slab	1187+63.62	0.00	685.79	685.81

West Edge of Shoulder

Location	Station	Offset	Theoretical Grade Elevations	Theoretical Grade Elevations Adjusted For Grinding
North End of S. Appr. Slab	1187+34.68	6.00	685.55	685.57
A3	1187+44.68	6.00	685.59	685.61
A4	1187+54.68	6.00	685.63	685.65
South End of S. Appr. Slab	1187+64.68	6.00	685.67	685.69

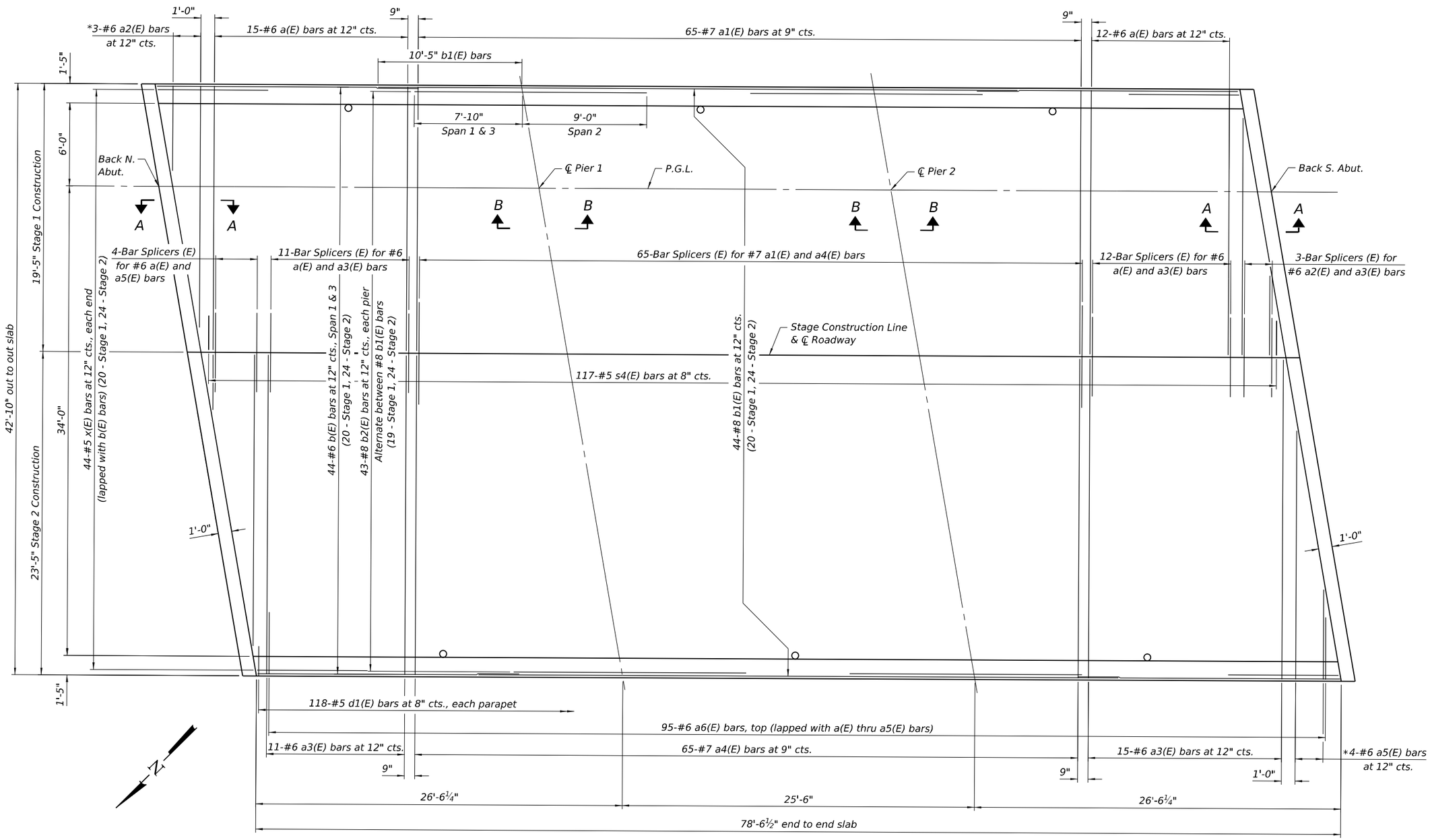

PLAN SHOWING TOP REINFORCEMENT

MINIMUM BAR LAP

#8 bar = 5'-4"

*Order a2(E) and a5(E) bars full length, cut to fit skew, and use remainder in opposite end.

Notes:
See sheet 16 for Section A-A and B-B.
See sheet 20 for superstructure details and Bill of Material.

EFK•Moen Civil Engineering Design	USER NAME = $USER$	DESIGNED - KRH	REVISED -	STATE OF ILLINOIS DEPARTMENT OF TRANSPORTATION	SUPERSTRUCTURE STRUCTURE NO. 038-0229 (S.B.)	F.A.I. RTE.	SECTION	COUNTY	TOTAL SHEETS / SHEET NO.
		CHECKED - ACB	REVISED -			57	((38-7B)BR)BR	IROQUOIS	84 / 47
	PLOT SCALE =	DRAWN - KRH	REVISED -					CONTRACT NO. 66M23	
	PLOT DATE = 3/11/2025	CHECKED - ACB	REVISED -		SHEET 14 OF 37 SHEETS		ILLINOIS	FED. AID PROJECT	

MODEL: Default
FILE NAME: O:\2022R3\IDOT\CAD CONNECT\22057.13 IDOT D3 PTB 204-028 WO 13 I-57 over Louis Creek Ph III\CADD Data\Bridge\Plotsheets\038022960230_66M23_014_Superstructure.dgn
3/11/2025 10:07:22 AM

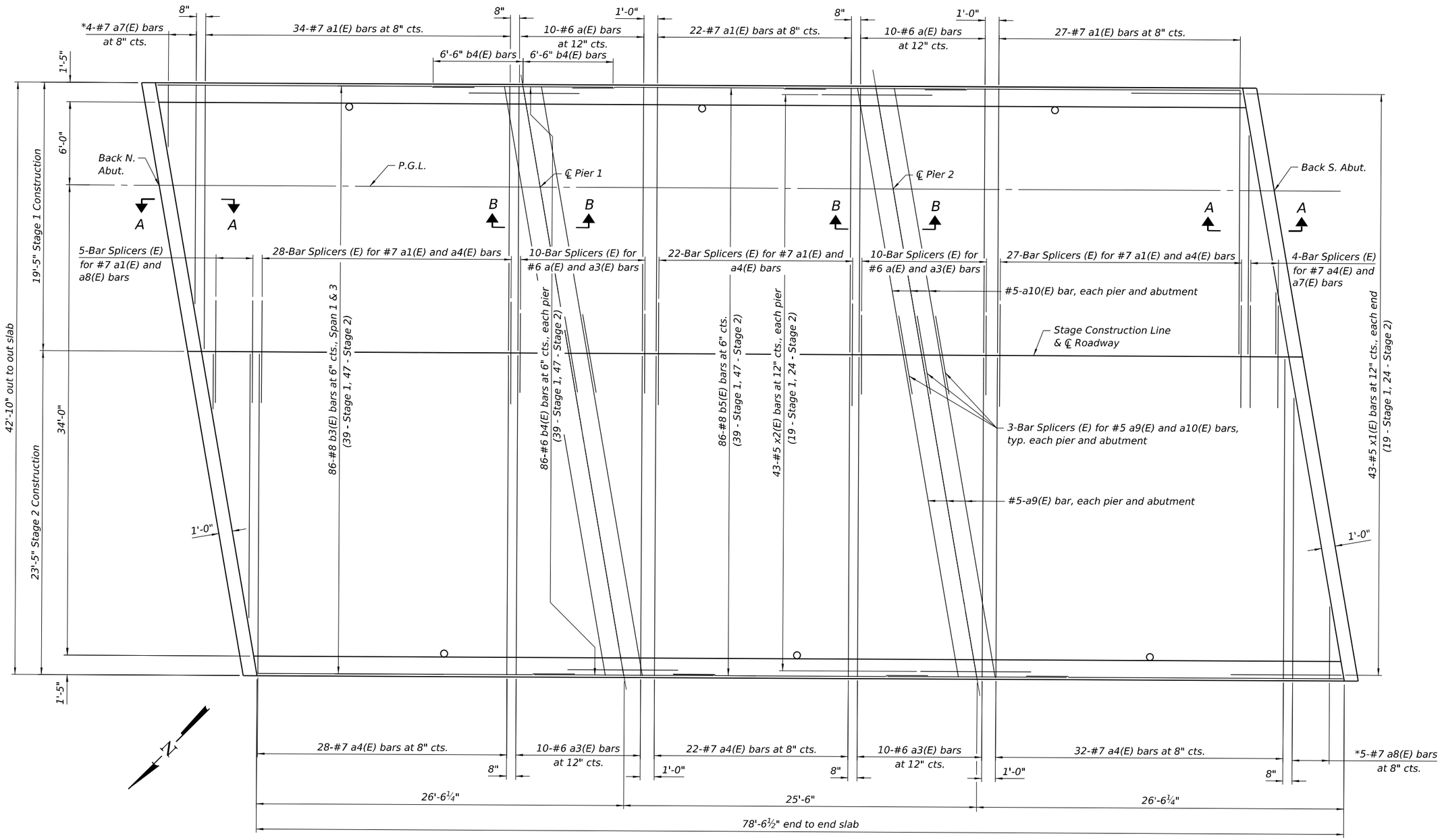

PLAN SHOWING BOTTOM REINFORCEMENT

MINIMUM BAR LAP

#8 bar = 5'-11"

*Order a7(E) and a8(E) bars full length, cut to fit skew, and use remainder in opposite end.

Notes:
See sheet 16 for Section A-A and B-B.
See sheet 20 for superstructure details and Bill of Material.

MODEL: Default
FILE NAME: O:\2022R3\IDOT\CAD CONNECT\22057.13 IDOT D3 PTB 204-028 WO 13 I-57 over Louis Creek Ph II\CADD Data\Bridge\Plotsheets\0380229k0230_66M23_015_Superstructure.dgn
3/11/2025 10:07:24 AM

EFK•Moen Civil Engineering Design	USER NAME = $USER$	DESIGNED - KRH	REVISED -	STATE OF ILLINOIS DEPARTMENT OF TRANSPORTATION	SUPERSTRUCTURE STRUCTURE NO. 038-0229 (S.B.)
		CHECKED - ACB	REVISED -		
	PLOT SCALE =	DRAWN - KRH	REVISED -		
	PLOT DATE = 3/11/2025	CHECKED - ACB	REVISED -		SHEET 15 OF 37 SHEETS

F.A.I. RTE.	SECTION	COUNTY	TOTAL SHEETS	SHEET NO.
57	((38-7B)BR)BR	IROQUOIS	84	48
		CONTRACT NO. 66M23		
	ILLINOIS	FED. AID PROJECT		

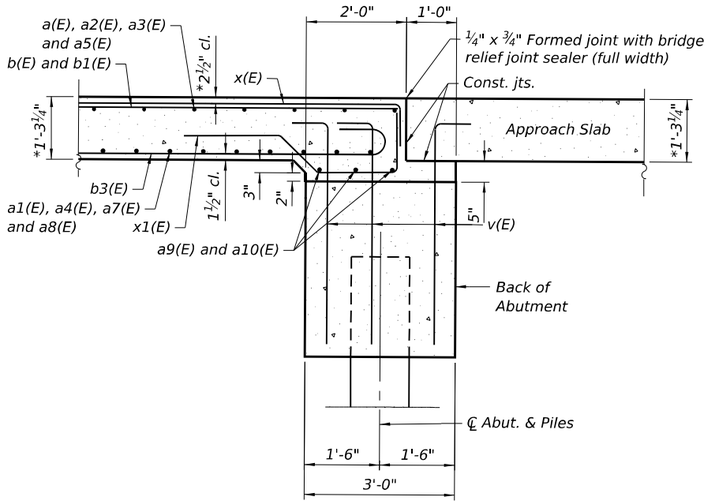

SECTION A-A

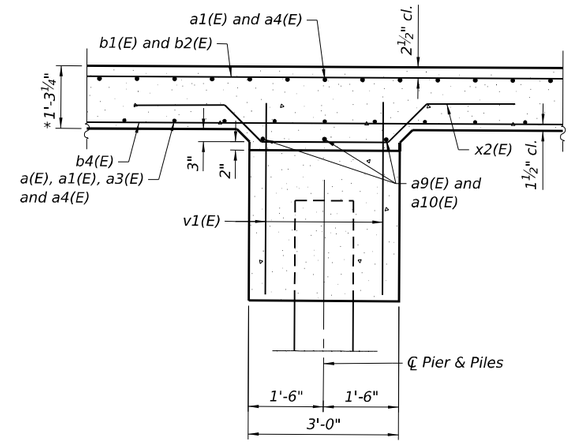

SECTION B-B

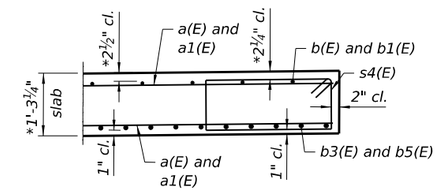

DETAIL A

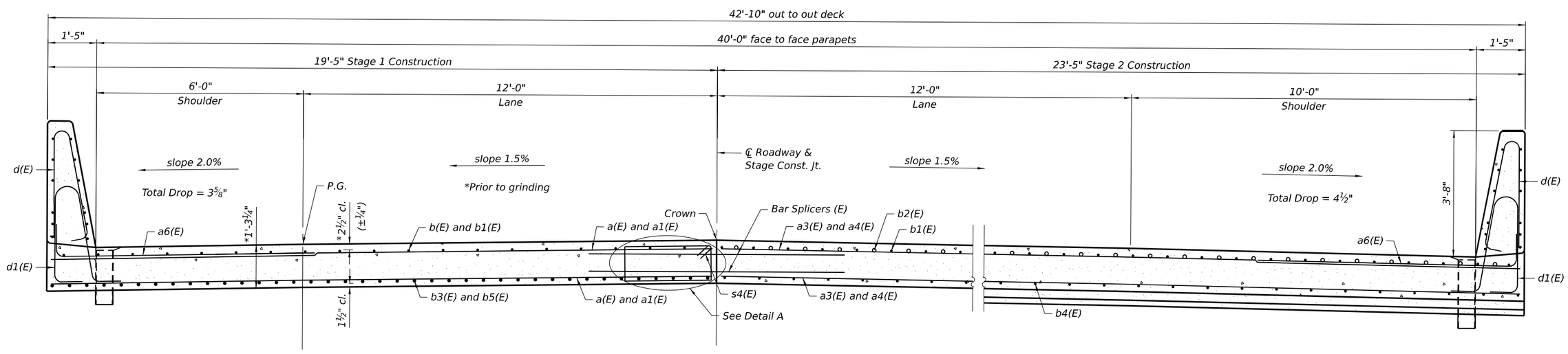

NEAR MIDSPAN

NEAR PIER

CROSS SECTION

(Looking South)

MODEL: Default
FILE NAME: O:\2022R3\IDOT\CAD CONNECT\22057.13 IDOT D3 PTB 204-028 WO 13 I-57 over Louis Creek Ph II\CADD Data\Bridge\Plotsheets\0380229\60230_66M23_016_Superstructure.dgn

3/11/2025 10:07:27 AM

EFK•Moen
Civil Engineering Design

USER NAME = $USER$	DESIGNED - KRH	REVISED -	
	CHECKED - ACB	REVISED -	
PLOT SCALE =	DRAWN - KRH	REVISED -	
PLOT DATE = 3/11/2025	CHECKED - ACB	REVISED -	

STATE OF ILLINOIS
DEPARTMENT OF TRANSPORTATION

SUPERSTRUCTURE
STRUCTURE NO. 038-0229 (S.B.)

SHEET 16 OF 37 SHEETS

F.A.I. RTE.	SECTION	COUNTY	TOTAL SHEETS	SHEET NO.
57	((38-7B)BR)BR	IROQUOIS	84	49

CONTRACT NO. 66M23

ILLINOIS FED. AID PROJECT

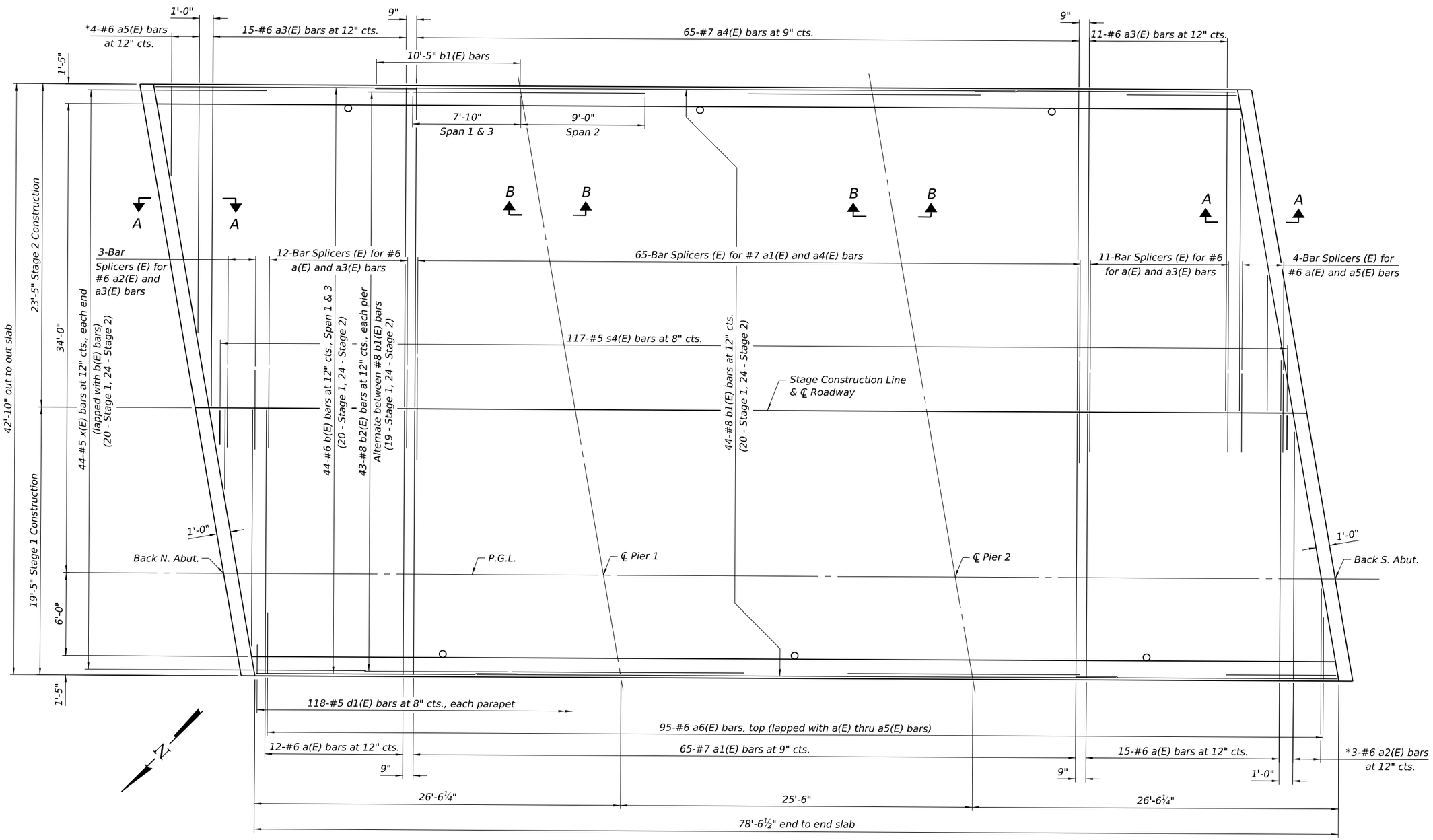

MINIMUM BAR LAP

#8 bar = 5'-4"

PLAN SHOWING TOP REINFORCEMENT

*Order a(E) and a2(E) bars full length, cut to fit skew, and use remainder in opposite end.

Notes:
See sheet 19 for Section A-A and B-B.
See sheet 20 for superstructure details and Bill of Material.

MODEL: Default
FILE NAME: O:\2022R3\IDOT\CAD CONNECT\22057.13 IDOT D3 PTB 204-028 WO 13 I-57 over Louis Creek Ph II\CADD Data\Bridge\Plotsheets\03802296O230_66M23_017_Superstructure.dgn
3/11/2025 10:07:29 AM

EFK•Moen
Civil Engineering Design

USER NAME = $USER$	DESIGNED - KRH	REVISED -	
	CHECKED - ACB	REVISED -	
PLOT SCALE =	DRAWN - KRH	REVISED -	
PLOT DATE = 3/11/2025	CHECKED - ACB	REVISED -	

STATE OF ILLINOIS
DEPARTMENT OF TRANSPORTATION

SUPERSTRUCTURE
STRUCTURE NO. 038-0230 (N.B.)

SHEET 17 OF 37 SHEETS

F.A.I. RTE.	SECTION	COUNTY	TOTAL SHEETS	SHEET NO.
57	((38-7B)BR)BR	IROQUOIS	84	50
		CONTRACT NO. 66M23		
	ILLINOIS	FED. AID PROJECT		

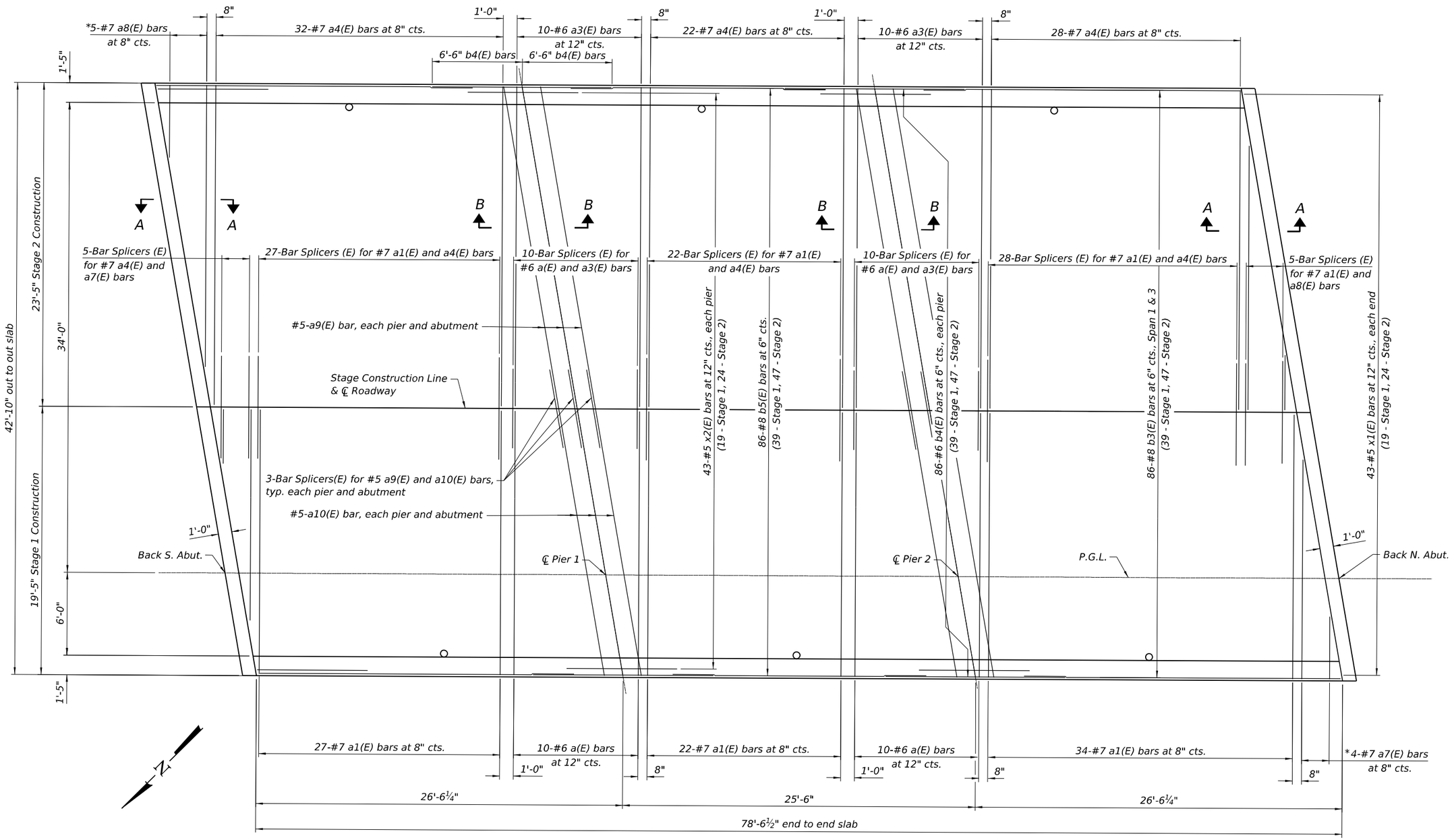

MINIMUMM BAR LAP

#8 bar = 5'-11"

PLAN SHOWING BOTTOM REINFORCEMENT

*Order a7(E) and a8(E) bars full length, cut to fit skew, and use remainder in opposite end.

Notes:
See sheet 19 for Section A-A and B-B.
See sheet 20 for superstructure details and Bill of Material.

MODEL: Default
FILE NAME: O:\2022R3\IDOT\CAD CONNECT\22057.13 IDOT D3 PTB 204-028 WO 13 I-57 over Louis Creek Ph III\CADD Data\Bridge\Plotsheets\0380229k0230_66M23_018_Superstructure.dgn
3/11/2025 10:07:31 AM

EFK•Moen Civil Engineering Design	USER NAME = $USER$	DESIGNED - KRH	REVISED -	STATE OF ILLINOIS DEPARTMENT OF TRANSPORTATION	SUPERSTRUCTURE STRUCTURE NO. 038-0230 (N.B.)
		CHECKED - ACB	REVISED -		
	PLOT SCALE =	DRAWN - KRH	REVISED -		
	PLOT DATE = 3/11/2025	CHECKED - ACB	REVISED -		SHEET 18 OF 37 SHEETS

F.A.I. RTE.	SECTION	COUNTY	TOTAL SHEETS	SHEET NO.
57	((38-7B)BR)BR	IROQUOIS	84	51
		CONTRACT NO. 66M23		
	ILLINOIS	FED. AID PROJECT		

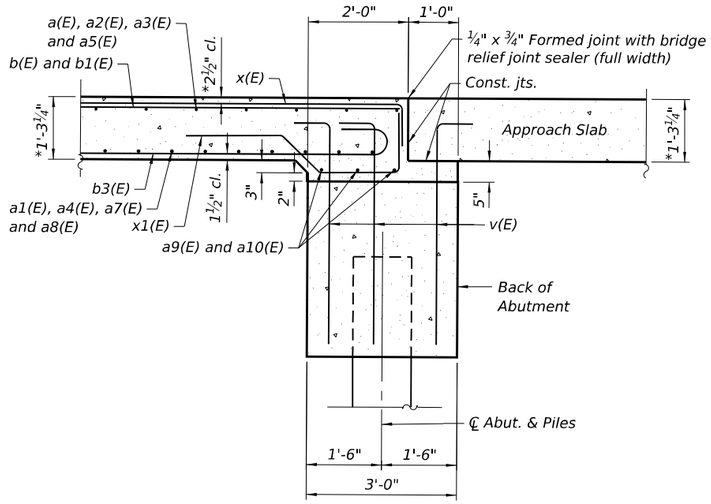

SECTION A-A

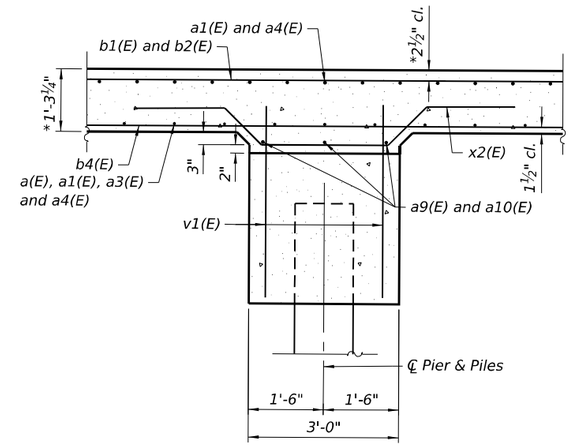

SECTION B-B

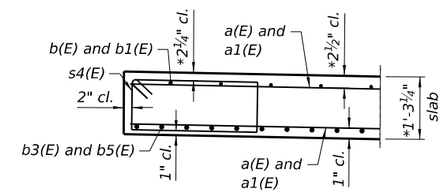

DETAIL A

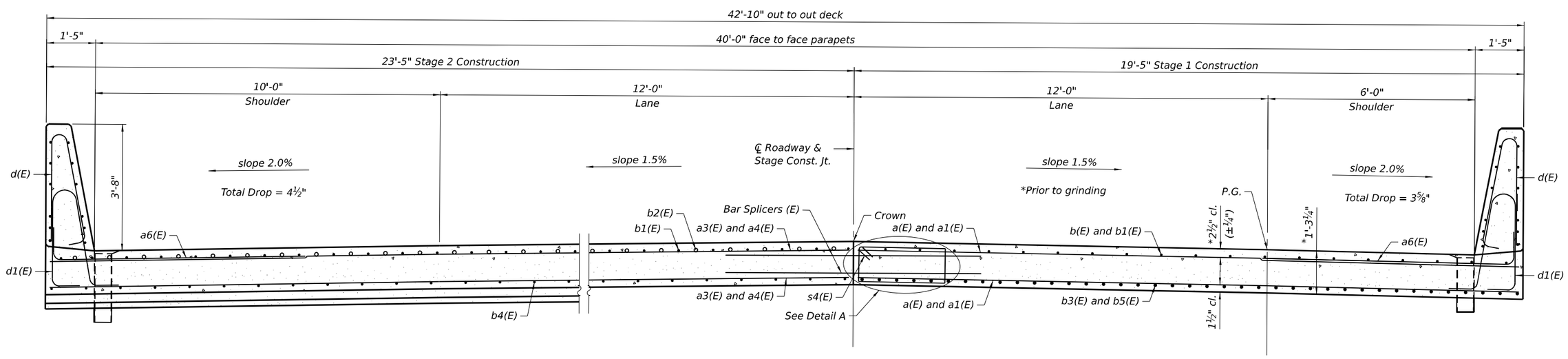

CROSS SECTION
(Looking South)

MODEL: Default
FILE NAME: O:\2022R3\IDOT\CAD CONNECT\22057.13 IDOT D3 PTB 204-028 WO 13 I-57 over Louis Creek Ph II\CADD Data\Bridge\Plotsheets\0380229\60230_66M23_019_Superstructure.dgn

3/11/2025 10:07:37 AM

EFK•Moen
Civil Engineering Design

USER NAME = $USER$	DESIGNED - KRH	REVISED -	
	CHECKED - ACB	REVISED -	
PLOT SCALE =	DRAWN - KRH	REVISED -	
PLOT DATE = 3/11/2025	CHECKED - ACB	REVISED -	

STATE OF ILLINOIS
DEPARTMENT OF TRANSPORTATION

SUPERSTRUCTURE
STRUCTURE NO. 038-0230 (N.B.)

SHEET 19 OF 37 SHEETS

F.A.I. RTE.	SECTION	COUNTY	TOTAL SHEETS	SHEET NO.
57	((38-7B)BR)BR	IROQUOIS	84	52

CONTRACT NO. 66M23

ILLINOIS FED. AID PROJECT

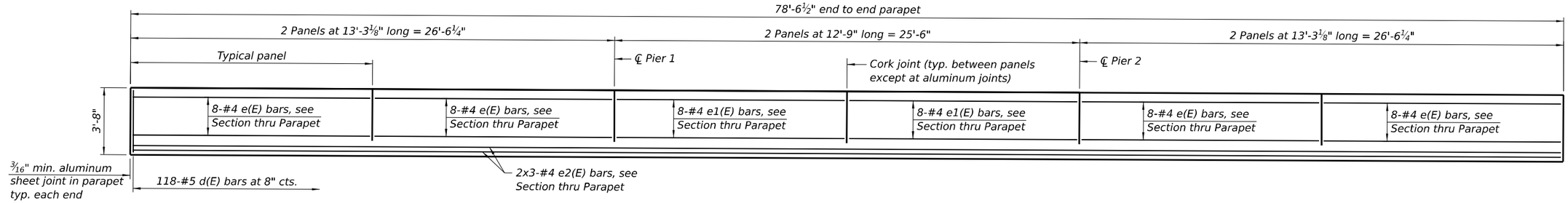

MINIMUM BAR LAP

#4 bar = 2'-5"

INSIDE ELEVATION OF PARAPET

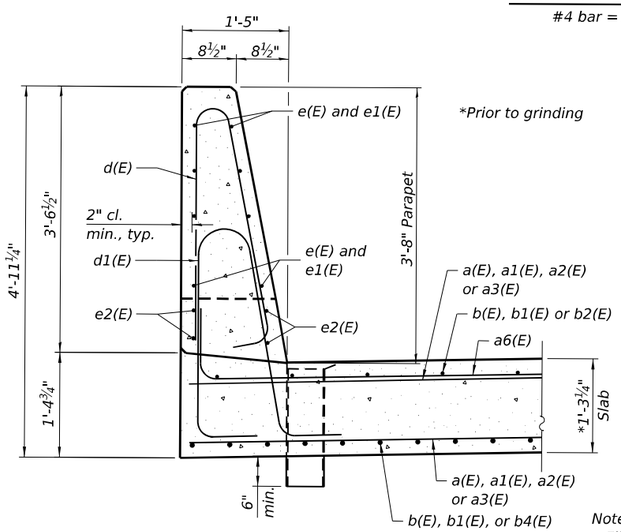

SECTION THRU PARAPET

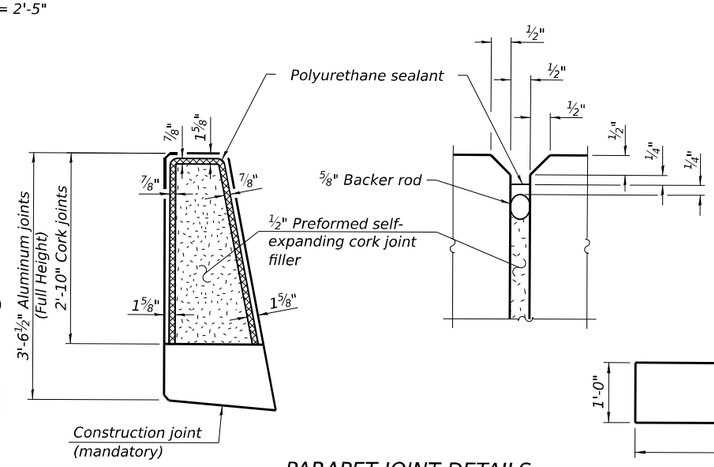

PARAPET JOINT DETAILS

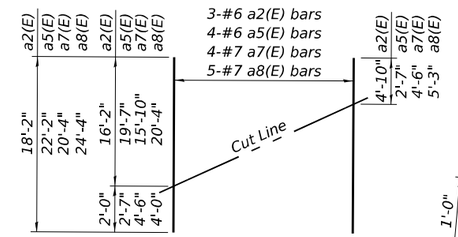

FIELD CUTTING DIAGRAM

Order a2(E), a5(E), a7(E) and a8(E) bars full length. Cut as shown and use remainder of bars in opposite end of slab.

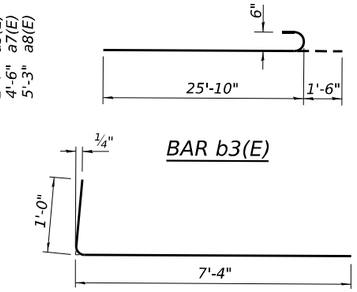

BAR b3(E)

BAR a6(E)

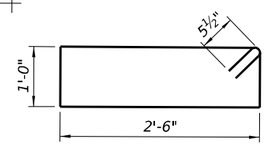

BAR s4(E)

SUPERSTRUCTURE BILL OF MATERIAL STRUCTURE NO. 038-0229

Bar	No.	Size	Length	Shape
a(E)	47	#6	19'-2"	
a1(E)	148	#7	19'-2"	
a2(E)	3	#6	18'-2"	
a3(E)	46	#6	23'-2"	
a4(E)	147	#7	23'-2"	
a5(E)	4	#6	22'-2"	
a6(E)	190	#6	8'-4"	
a7(E)	4	#7	20'-4"	
a8(E)	5	#7	24'-4"	
a9(E)	12	#5	23'-6"	
a10(E)	12	#5	19'-5"	
b(E)	88	#6	21'-4"	
b1(E)	44	#8	46'-4"	
b2(E)	86	#8	16'-10"	
b3(E)	172	#8	25'-10"	
b4(E)	172	#6	13'-0"	
b5(E)	86	#8	24'-4"	
d(E)	236	#5	7'-0"	
d1(E)	236	#5	8'-6"	
e(E)	64	#4	13'-0"	
e1(E)	32	#4	12'-5"	
e2(E)	12	#4	27'-9"	
s4(E)	117	#5	7'-11"	
x(E)	88	#5	8'-10"	
x1(E)	86	#5	5'-6"	
x2(E)	86	#5	8'-2"	
Concrete Superstructure		Cu. Yd.	188.8	
Reinforcement Bars, Epoxy Coated		Pound	60,060	

SUPERSTRUCTURE BILL OF MATERIAL STRUCTURE NO. 038-0230

Bar	No.	Size	Length	Shape
a(E)	47	#6	19'-2"	
a1(E)	148	#7	19'-2"	
a2(E)	3	#6	18'-2"	
a3(E)	46	#6	23'-2"	
a4(E)	147	#7	23'-2"	
a5(E)	4	#6	22'-2"	
a6(E)	190	#6	8'-4"	
a7(E)	4	#7	20'-4"	
a8(E)	5	#7	24'-4"	
a9(E)	12	#5	23'-6"	
a10(E)	12	#5	19'-5"	
b(E)	88	#6	21'-4"	
b1(E)	44	#8	46'-4"	
b2(E)	86	#8	16'-10"	
b3(E)	172	#8	25'-10"	
b4(E)	172	#6	13'-0"	
b5(E)	86	#8	24'-4"	
d(E)	236	#5	7'-0"	
d1(E)	236	#5	8'-6"	
e(E)	64	#4	13'-0"	
e1(E)	32	#4	12'-5"	
e2(E)	12	#4	27'-9"	
s4(E)	117	#5	7'-11"	
x(E)	88	#5	8'-10"	
x1(E)	86	#5	5'-6"	
x2(E)	86	#5	8'-2"	
Concrete Superstructure		Cu. Yd.	188.8	
Reinforcement Bars, Epoxy Coated		Pound	60,060	

Bars indicated thus 2 x 3-#4 etc. indicates 2 lines of bars with 3 lengths per line.

Notes:

Fiberglass pipe shall conform to ASTM D2996, with short-time rupture strength hoop tensile stress of 30,000 p.s.i. minimum.

The exterior surfaces of the fiberglass floor drains shall be pigmented by the manufacturer with a color that matches the concrete.

The top portion of aluminum floor drains shall be coated with 5 mils of either bitumen paint or epoxy paint to minimize reaction with wet concrete.

The 3/16" min. aluminum sheet shall be ASTM B 209 alloy 3003-H14 and coated with 5 mils of either bitumen paint or epoxy paint to minimize reaction with wet concrete. Cost included with Concrete Superstrcuture.

The polyurethane sealant shall be according to Article 1050.04 of the Std. Spec. and the color shall be gray.

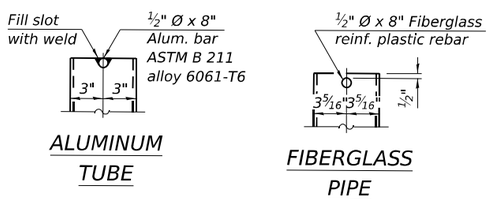

ALUMINUM TUBE

FIBERGLASS PIPE

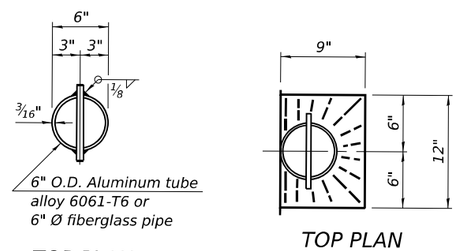

TOP PLAN (Showing aluminum tube)

TOP PLAN

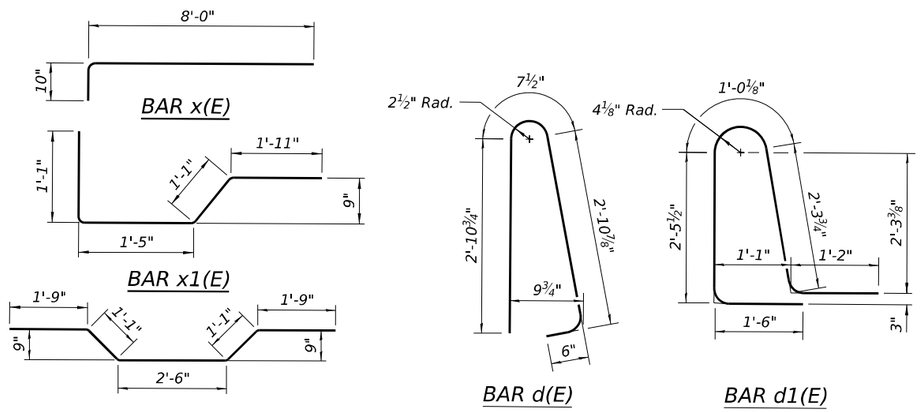

BAR x(E)

BAR x1(E)

BAR x2(E)

BAR d(E)

BAR d1(E)

MODEL: Default
FILE NAME: O:\2022R3\IDOT\CAD CONNECT\22057.13 IDOT D3 PTB 204-028 WO 13 I-57 over Louis Creek Ph II\CADD Data\Bridge\Plotsheets\0380229\60230_66M23_020_Superstructure.dgn
3/11/2025 10:07:42 AM

EFK•Moen Civil Engineering Design

USER NAME = $USER$	DESIGNED - KRH	REVISED -	
	CHECKED - ACB	REVISED -	
PLOT SCALE =	DRAWN - KRH	REVISED -	
PLOT DATE = 3/11/2025	CHECKED - ACB	REVISED -	

STATE OF ILLINOIS
DEPARTMENT OF TRANSPORTATION

SUPERSTRUCTURE DETAILS
STRUCTURE NO. 038-0229 (S.B.) & 038-0230 (N.B.)

SHEET 20 OF 37 SHEETS

F.A.I. RTE.	SECTION	COUNTY	TOTAL SHEETS	SHEET NO.
57	((38-7B)BR)BR	IROQUOIS	84	53
		CONTRACT NO. 66M23		
	ILLINOIS	FED. AID PROJECT		

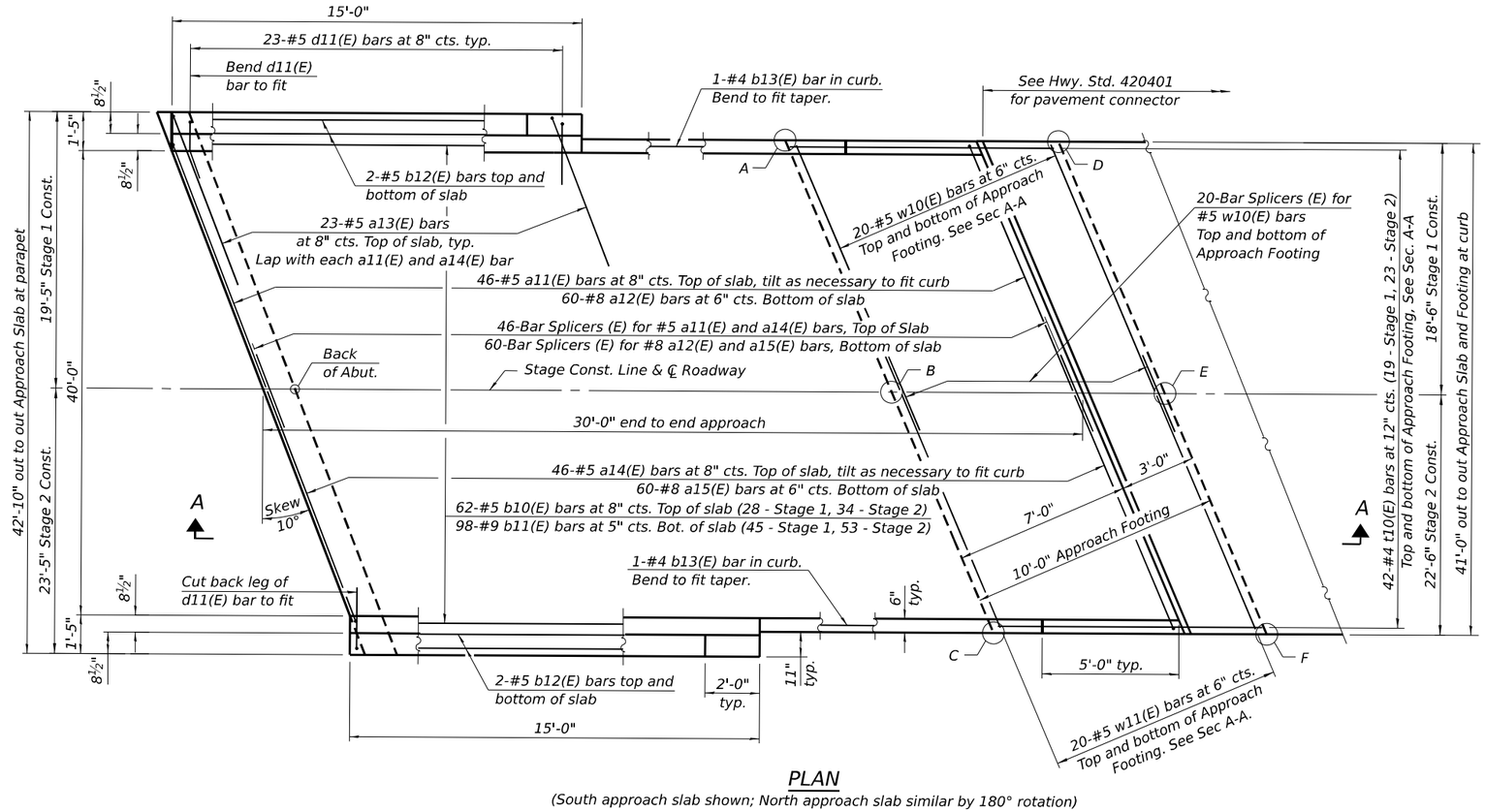

PLAN

(South approach slab shown; North approach slab similar by 180° rotation)

TOP AND BOTTOM ELEVATIONS FOR APPROACH FOOTING

North Approach			South Approach		
Point/ Location	Top	Bottom	Point/ Location	Top	Bottom
A - S.W.	683.85	683.01	A - N.E.	684.42	683.59
B - S. ℄	684.22	683.39	B - N. ℄	684.74	683.91
C - S.E.	683.90	683.06	C - N.W.	684.37	683.54
D - N.W.	683.81	682.97	D - S.E.	684.46	683.63
E - N. ℄	684.18	683.35	E - S. ℄	684.79	683.95
F - N.E.	683.86	683.02	F - S.W.	684.41	683.58

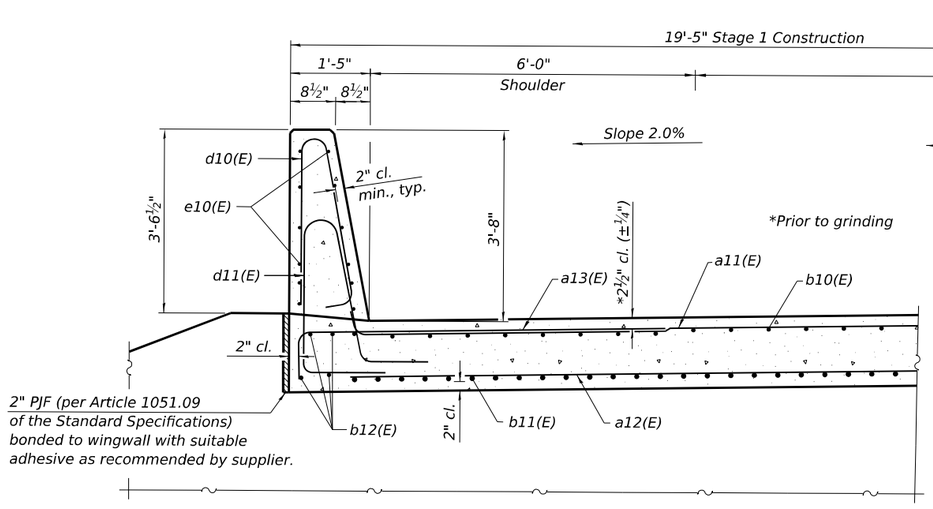

NEAR ABUTMENT

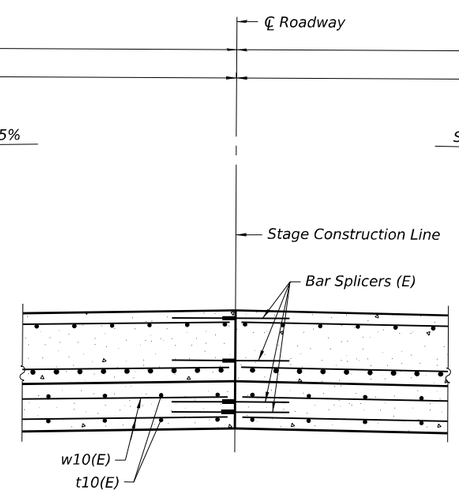

CROSS SECTION

(Looking South)

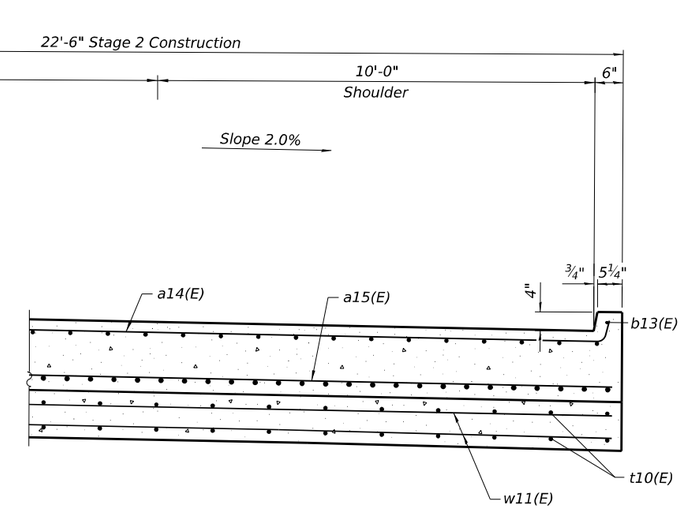

AT APPROACH FOOTING

MODEL: Default
FILE NAME: O:\2023R3\IDOT\CAD CONNECT\22057.13 IDOT D3 PTB 204-028 WO 13 I-57 over Louis Creek Ph II\CADD Data\Bridge\Plotsheets\038022960230_66M23_021_Approach.dgn
3/11/2025 10:07:52 AM

EFK•Moen Civil Engineering Design

USER NAME = $USER$	DESIGNED - KRH	REVISED -	
	CHECKED - ACB	REVISED -	
PLOT SCALE =	DRAWN - KRH	REVISED -	
PLOT DATE = 3/11/2025	CHECKED - ACB	REVISED -	

STATE OF ILLINOIS
DEPARTMENT OF TRANSPORTATION

BRIDGE APPROACH SLAB DETAILS
STRUCTURE NO. 038-0229 (S.B.)

SHEET 21 OF 37 SHEETS

F.A.I. RTE.	SECTION	COUNTY	TOTAL SHEETS	SHEET NO.
57	((38-7B)BR)BR	IROQUOIS	84	54
		CONTRACT NO. 66M23		
	ILLINOIS	FED. AID PROJECT		

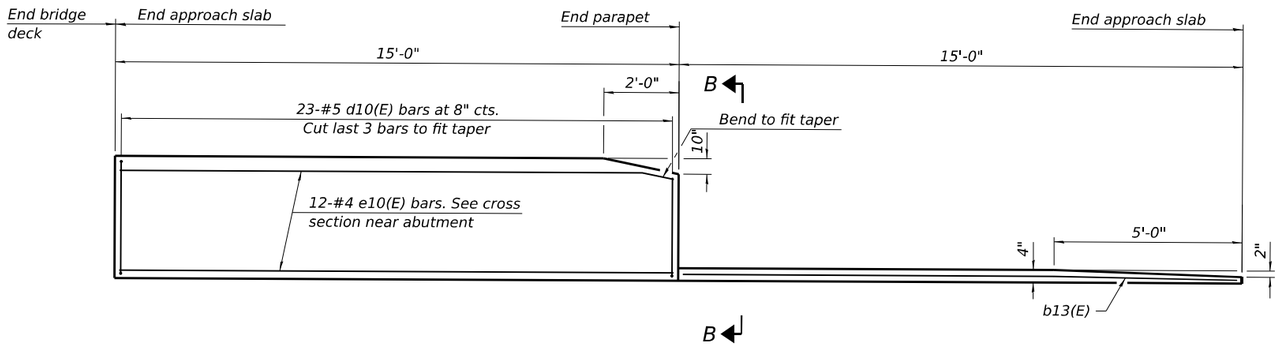

INSIDE ELEVATION OF PARAPET AND CURB

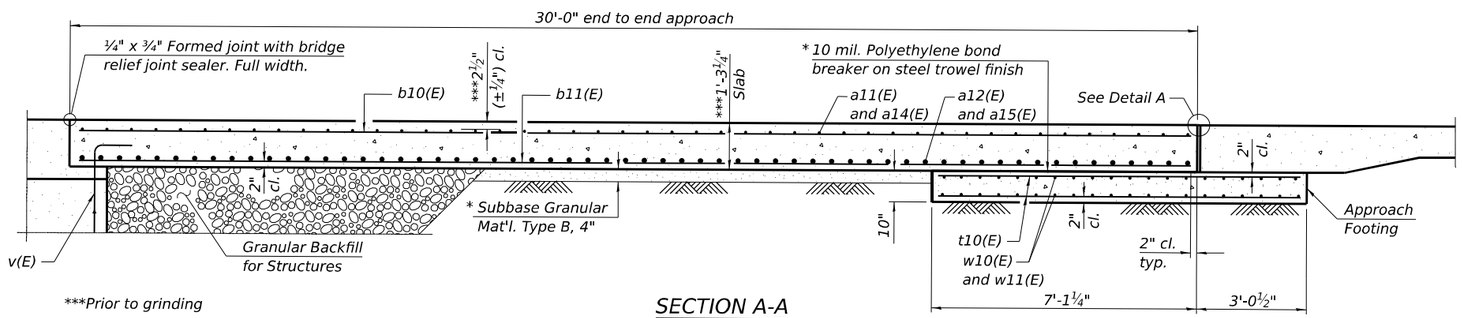

***Prior to grinding

SECTION A-A

Notes:

The joint opening shall be adjusted for temperature per Article 520.04 of the Standard Specifications. However, since this detail is for jointless structures, the length of bridge used to calculate the adjustment shall be equal to half the total bridge length plus the length of the bridge approach slab.

Parapet concrete shall be paid for as Concrete Superstructure.

Approach slab shall be paid for as Concrete Superstructure (Approach Slab).

Approach footing concrete shall be paid for as Concrete Structures.

The approach footing maximum applied service bearing pressure (Qmax) = 2.0 ksf.

Cost of excavation for approach footing included with Concrete Structures.

For Granular Backfill for Structures and drainage treatment details, see sheet 2 of 37.

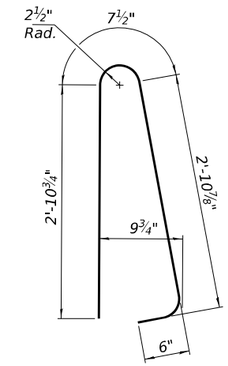

BAR d10(E)

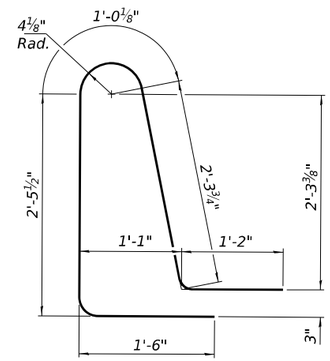

BAR d11(E)

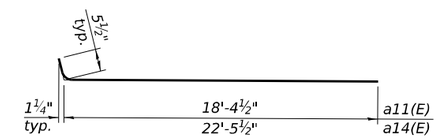

BAR a11(E) or a14(E)

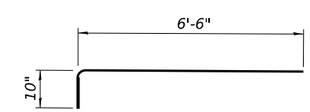

BAR a13(E)

TWO APPROACHES BILL OF MATERIAL

Bar	No.	Size	Length	Shape
a11(E)	92	#5	18'-10"	
a12(E)	120	#8	18'-6"	
a13(E)	92	#5	7'-4"	
a14(E)	92	#5	22'-11"	
a15(E)	120	#8	22'-7"	
b10(E)	124	#5	29'-8"	
b11(E)	196	#9	29'-8"	
b12(E)	16	#5	14'-8"	
b13(E)	4	#4	14'-8"	
d10(E)	92	#5	7'-0"	
d11(E)	92	#5	8'-6"	
e10(E)	48	#4	14'-8"	
t10(E)	168	#4	9'-10"	
w10(E)	80	#5	18'-6"	
w11(E)	80	#5	22'-7"	
Concrete Superstructure			Cu. Yd.	8.4
Concrete Superstructure (Approach Slab)			Cu. Yd.	117.0
Concrete Structures			Cu. Yd.	25.8
Reinforcement Bars, Epoxy Coated			Pound	48,260

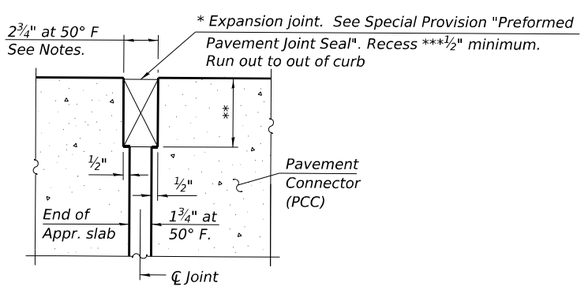

DETAIL A

(at Rt. ∠'s)

* Cost included with Concrete Superstructure (Approach Slab).

** Per manufacturer recommendations

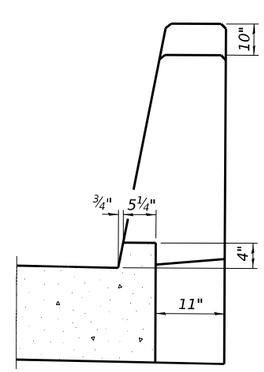

VIEW B-B

BAIA-CIP-44CS-0 5-15-2023

EFK•Moen Civil Engineering Design	USER NAME = $USER$	DESIGNED - KRH	REVISED -
		CHECKED - ACB	REVISED -
	PLOT SCALE =	DRAWN - KRH	REVISED -
	PLOT DATE = 3/11/2025	CHECKED - ACB	REVISED -

STATE OF ILLINOIS
DEPARTMENT OF TRANSPORTATION

BRIDGE APPROACH SLAB DETAILS
STRUCTURE NO. 038-0229 (S.B.)

SHEET 22 OF 37 SHEETS

F.A.I. RTE.	SECTION	COUNTY	TOTAL SHEETS	SHEET NO.
57	((38-7B)BR)BR	IROQUOIS	84	55

CONTRACT NO. 66M23

ILLINOIS FED. AID PROJECT

MODEL: Default
FILE NAME: O:\2022R3\IDOT\CAD CONNECT\22057.13 IDOT D3 PTB 204-028 WO 13 I-57 over Louis Creek Ph II\CADD Data\Bridge\Plotsheets\0380229\66M23_022_Approach.dgn

3/11/2025 10:07:54 AM

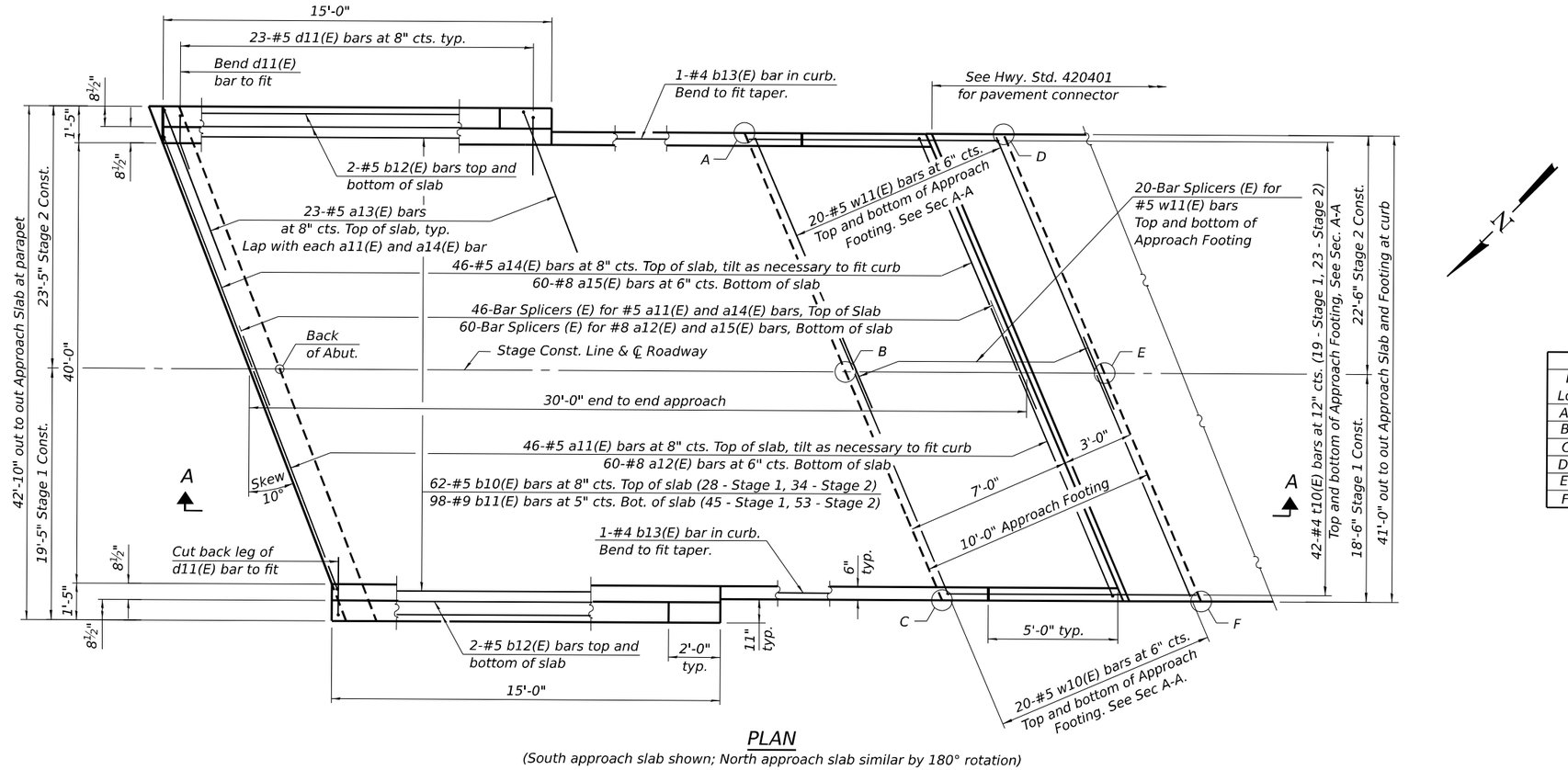

PLAN

(South approach slab shown; North approach slab similar by 180° rotation)

TOP AND BOTTOM ELEVATIONS FOR APPROACH FOOTING

North Approach			South Approach		
Point/ Location	Top	Bottom	Point/ Location	Top	Bottom
A - S.W.	683.86	683.03	A - N.E.	684.27	683.44
B - S. ℄	684.16	683.32	B - N. ℄	684.68	683.85
C - S.E.	683.75	682.92	C - N.W.	684.38	683.55
D - N.W.	683.82	682.98	D - S.E.	684.31	683.48
E - N. ℄	684.11	683.28	E - S. ℄	684.72	683.89
F - N.E.	683.71	682.87	F - S.W.	684.42	683.59

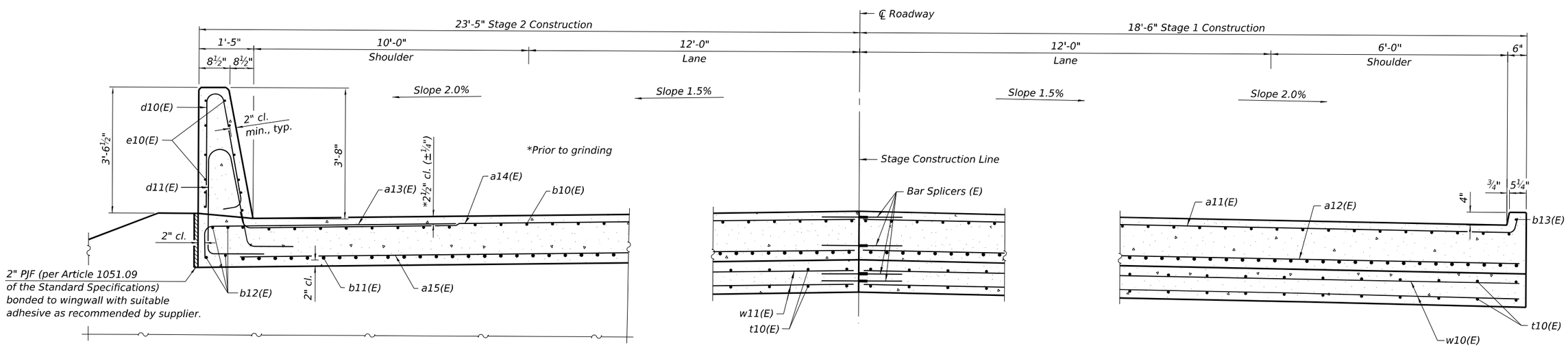

NEAR ABUTMENT

CROSS SECTION

(Looking South)

AT APPROACH FOOTING

EFK•Moen Civil Engineering Design	USER NAME = $USER$	DESIGNED - KRH	REVISED -
		CHECKED - ACB	REVISED -
	PLOT SCALE =	DRAWN - KRH	REVISED -
	PLOT DATE = 3/11/2025	CHECKED - ACB	REVISED -

STATE OF ILLINOIS
DEPARTMENT OF TRANSPORTATION

BRIDGE APPROACH SLAB DETAILS
STRUCTURE NO. 038-0230 (N.B.)

SHEET 23 OF 37 SHEETS

F.A.I. RTE.	SECTION	COUNTY	TOTAL SHEETS	SHEET NO.
57	((38-7B)BR)BR	IROQUOIS	84	56
		CONTRACT NO. 66M23		
		ILLINOIS	FED. AID PROJECT	

MODEL: Default
FILE NAME: O:\2022R3\IDOT\CAD CONNECT\22057.13 IDOT D3 PTB 204-028 WO 13 I-57 over Louis Creek Ph III\CADD Data\Bridge\Plotsheets\0380229\60230_66M23_023_Approach.dgn
3/11/2025 10:07:59 AM

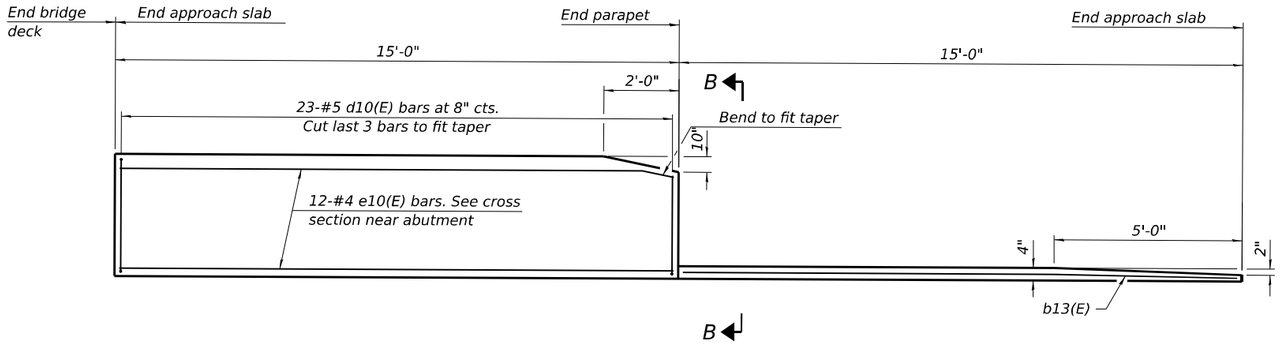

INSIDE ELEVATION OF PARAPET AND CURB

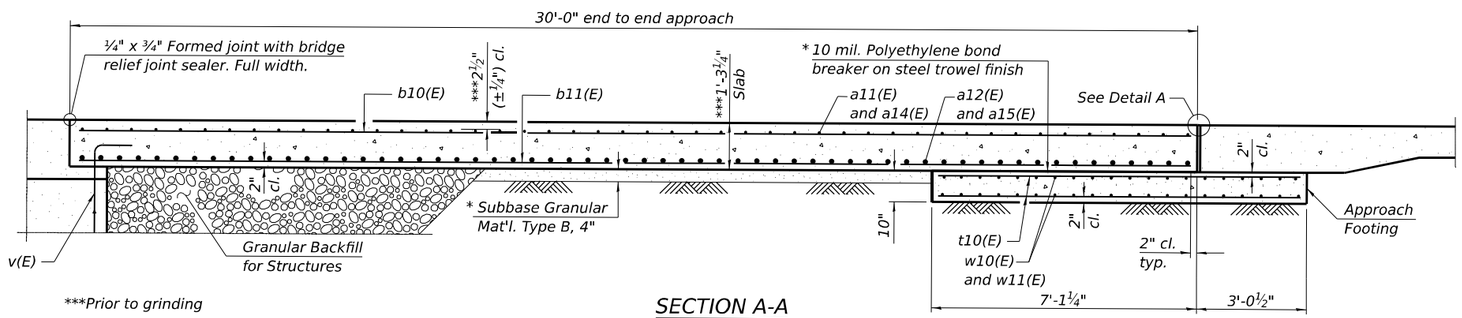

***Prior to grinding

SECTION A-A

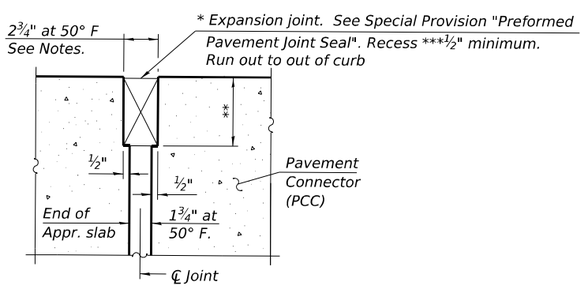

DETAIL A

(at Rt. ∠'s)

* Cost included with Concrete Superstructure (Approach Slab).

** Per manufacturer recommendations

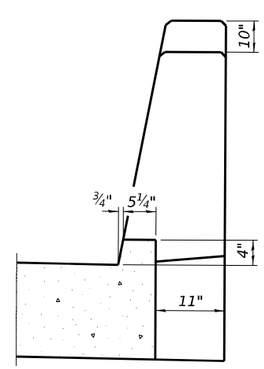

VIEW B-B

Notes:

The joint opening shall be adjusted for temperature per Article 520.04 of the Standard Specifications. However, since this detail is for jointless structures, the length of bridge used to calculate the adjustment shall be equal to half the total bridge length plus the length of the bridge approach slab.

Parapet concrete shall be paid for as Concrete Superstructure.

Approach slab shall be paid for as Concrete Superstructure (Approach Slab).

Approach footing concrete shall be paid for as Concrete Structures.

The approach footing maximum applied service bearing pressure (Qmax) = 2.0 ksf.

Cost of excavation for approach footing included with Concrete Structures.

For Granular Backfill for Structures and drainage treatment details, see sheet 2 of 37.

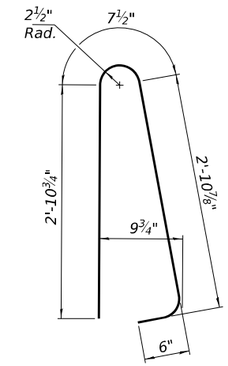

BAR d10(E)

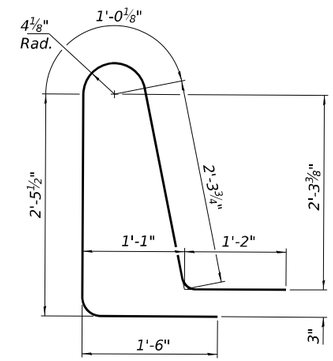

BAR d11(E)

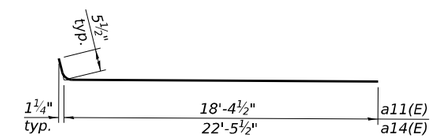

BAR a11(E) or a14(E)

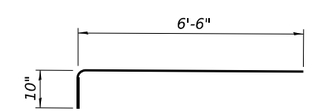

BAR a13(E)

TWO APPROACHES
BILL OF MATERIAL

Bar	No.	Size	Length	Shape
a11(E)	92	#5	18'-10"	
a12(E)	120	#8	18'-6"	
a13(E)	92	#5	7'-4"	
a14(E)	92	#5	22'-11"	
a15(E)	120	#8	22'-7"	
b10(E)	124	#5	29'-8"	
b11(E)	196	#9	29'-8"	
b12(E)	16	#5	14'-8"	
b13(E)	4	#4	14'-8"	
d10(E)	92	#5	7'-0"	
d11(E)	92	#5	8'-6"	
e10(E)	48	#4	14'-8"	
t10(E)	168	#4	9'-10"	
w10(E)	80	#5	18'-6"	
w11(E)	80	#5	22'-7"	
Concrete Superstructure			Cu. Yd.	8.4
Concrete Superstructure (Approach Slab)			Cu. Yd.	117.0
Concrete Structures			Cu. Yd.	25.8
Reinforcement Bars, Epoxy Coated			Pound	48,260

BAIA-CIP-44CS-0 5-15-2023

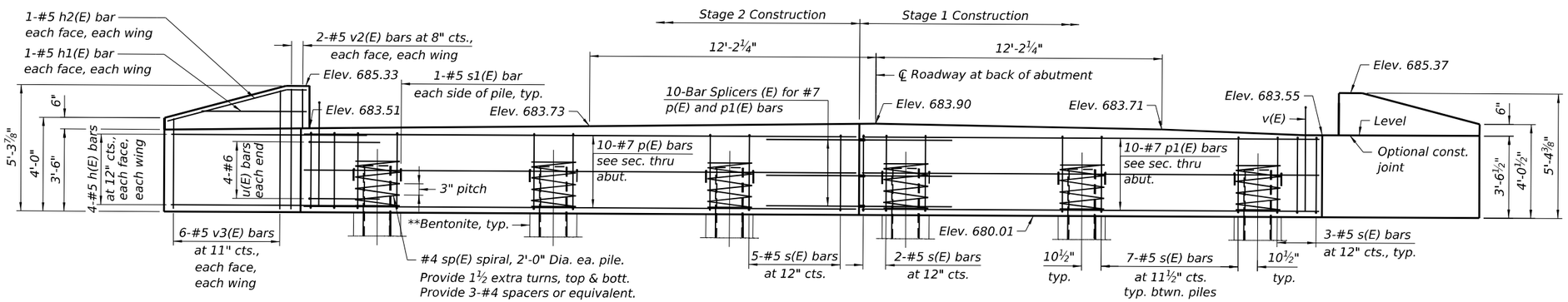

ELEVATION

(Looking North)

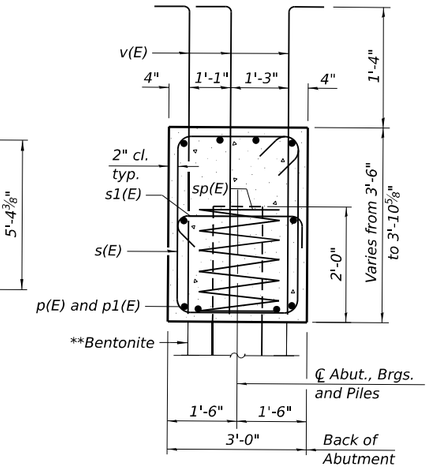

SEC. THRU ABUT.

Dimensions at right angles to abutment.

**Piles shall be driven through 2'-0" diameter precored holes extending to elevation 670.00 according to article 512.09(c) of the Standard Specifications except that the void space outside the pile shall be filled with bentonite according to the manufacturer's recommendations to achieve a Qu of 1.5 tsf. Cost included in driving piles.

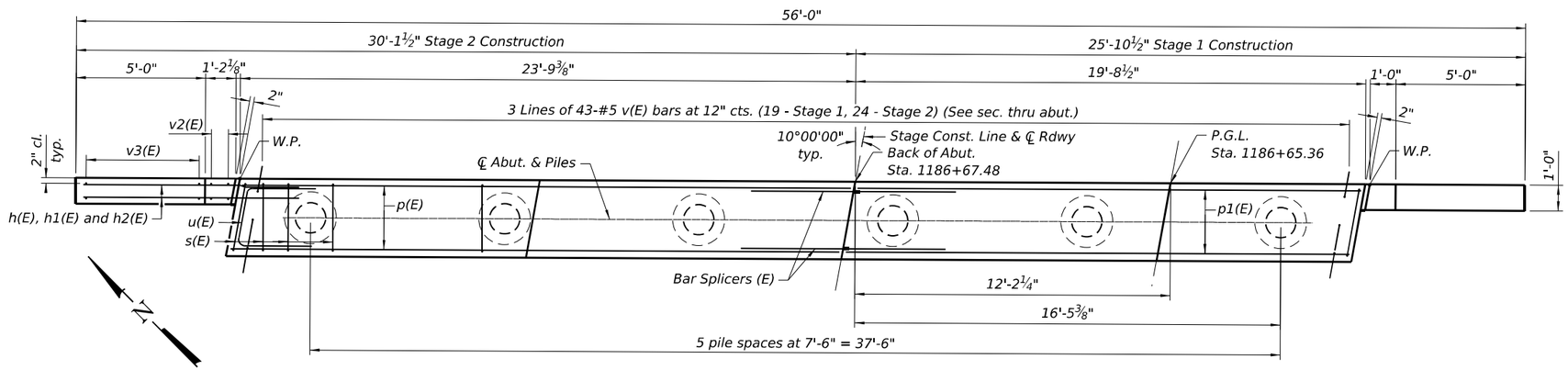

PLAN

BILL OF MATERIAL

	Bar	No.	Size	Length	Shape
	h(E)	16	#5	8'-7"	
	h1(E)	4	#5	4'-6"	
	h2(E)	4	#5	6'-1"	
	p(E)	10	#7	23'-6"	
	p1(E)	10	#7	19'-5"	
	s(E)	41	#5	12'-7"	
	s1(E)	12	#5	3'-8"	
*	sp(E)	6	#4	2'-0"	
	u(E)	8	#6	11'-3"	
	v(E)	129	#5	5'-6"	
	v2(E)	8	#5	5'-0"	
	v3(E)	24	#5	8'-9"	
	Structure Excavation		Cu. Yd.	48	
	Concrete Structures		Cu. Yd.	20.2	
	Reinforcement Bars, Epoxy Coated		Pound	3,060	
	Furnishing Metal Shell Piles 14" x 0.250"		Foot	205	
	Driving Piles		Foot	205	
	Test Piles Metal Shells		Each	1	
	Pile Shoes		Each	6	

For details of piles see sheet 31 of 37.
For details of bar splicers, see sheet 33 of 37.
*Length is height of spiral

PILE DATA

Type: Metal Shell Piles 14" x 0.25" with pile shoes
Nominal Required Bearing: 293 k
Factored Resistance Available: 161 k
Est. Length: 41 ft
No. Production Piles: 5
No. Test Piles: 1

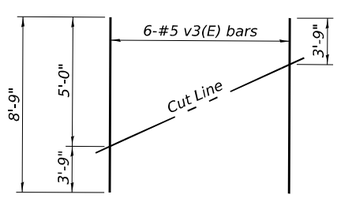

FIELD CUTTING DIAGRAM

Order v3(E) full length. Cut as shown and use remainder of bars in opposite wing.

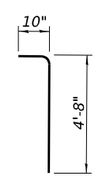

BAR v(E)

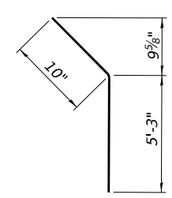

BAR h2(E)

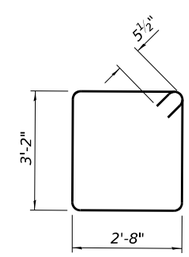

BAR s(E)

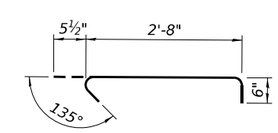

BAR s1(E)

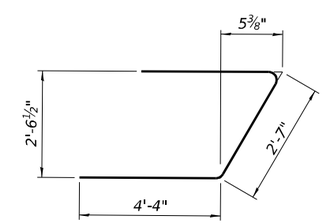

BAR u(E)

EFK•Moen Civil Engineering Design	USER NAME = $USER$	DESIGNED - KRH	REVISED -
		CHECKED - ACB	REVISED -
	PLOT SCALE =	DRAWN - KRH	REVISED -
	PLOT DATE = 3/11/2025	CHECKED - ACB	REVISED -

STATE OF ILLINOIS
DEPARTMENT OF TRANSPORTATION

NORTH ABUTMENT
STRUCTURE NO. 038-0229 (S.B.)

SHEET 25 OF 37 SHEETS

F.A.I. RTE.	SECTION	COUNTY	TOTAL SHEETS	SHEET NO.
57	((38-7B)BR)BR	IROQUOIS	84	58

CONTRACT NO. 66M23
ILLINOIS FED. AID PROJECT

MODEL: Default
FILE NAME: O:\2022R3\IDOT\CAD CONNECT\22057.13 IDOT D3 PTB 204-028 WO 13 I-57 over Louis Creek Ph II\CADD Data\Bridge\Plotsheets\0380229k0230_66M23_025_Abutment.dgn
3/11/2025 10:08:05 AM

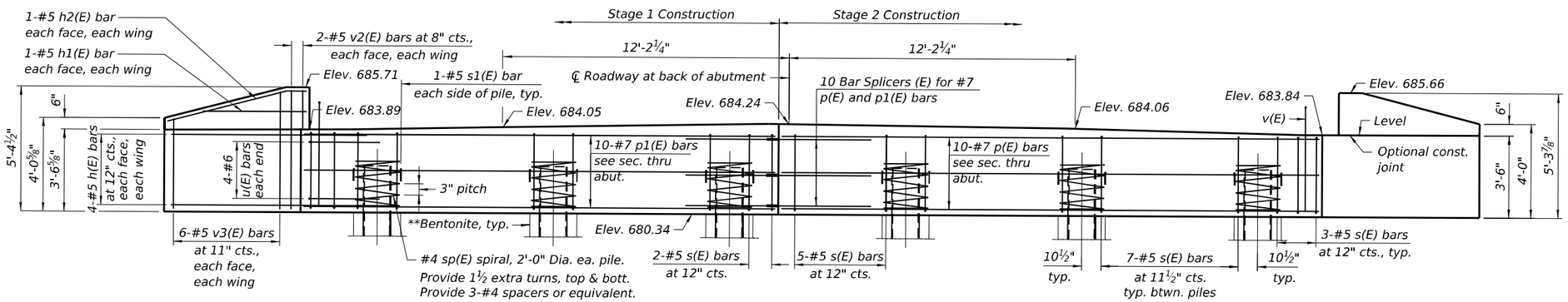

ELEVATION

(Looking South)

**Piles shall be driven through 2'-0" diameter precored holes extending to elevation 670.00 according to article 512.09(c) of the Standard Specifications except that the void space outside the pile shall be filled with bentonite according to the manufacturer's recommendations to achieve a Qu of 1.5 tsf. Cost included in driving piles.

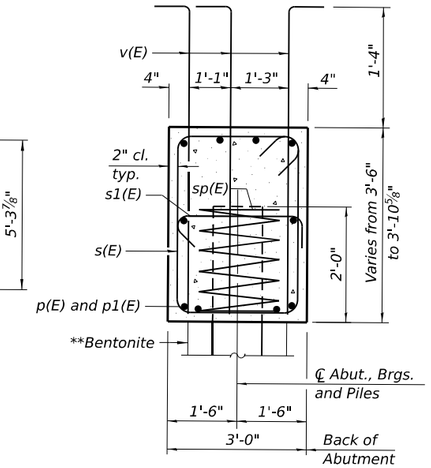

SEC. THRU ABUT.

Dimensions at right angles to abutment.

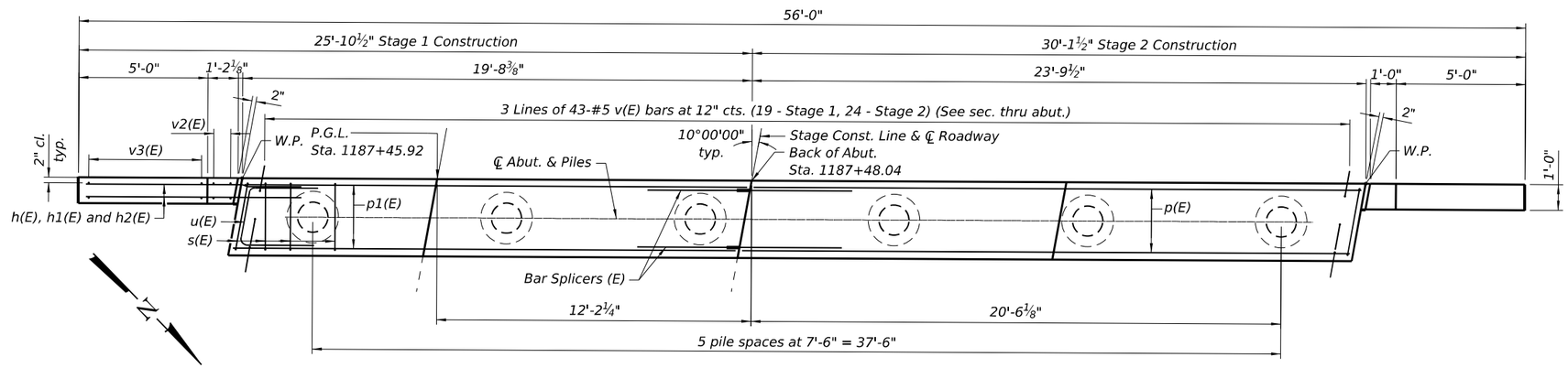

PLAN

BILL OF MATERIAL

	Bar	No.	Size	Length	Shape
	h(E)	16	#5	8'-7"	
	h1(E)	4	#5	4'-6"	
	h2(E)	4	#5	6'-1"	
	p(E)	10	#7	23'-6"	
	p1(E)	10	#7	19'-5"	
	s(E)	41	#5	12'-7"	
	s1(E)	12	#5	3'-8"	
*	sp(E)	6	#4	2'-0"	
	u(E)	8	#6	11'-3"	
	v(E)	129	#5	5'-6"	
	v2(E)	8	#5	5'-0"	
	v3(E)	24	#5	8'-9"	
	Structure Excavation		Cu. Yd.	46	
	Concrete Structures		Cu. Yd.	20.3	
	Reinforcement Bars, Epoxy Coated		Pound	3,060	
	Furnishing Metal Shell Piles 14" x 0.250"		Foot	210	
	Driving Piles		Foot	210	
	Test Piles Metal Shells		Each	1	
	Pile Shoes		Each	6	

For details of piles see sheet 31 of 37.
For details of bar splicers, see sheet 33 of 37.
*Length is height of spiral

PILE DATA

Type: Metal Shell Piles 14" x 0.25" with pile shoes
Nominal Required Bearing: 293 k
Factored Resistance Available: 161 k
Est. Length: 42 ft
No. Production Piles: 5
No. Test Piles: 1

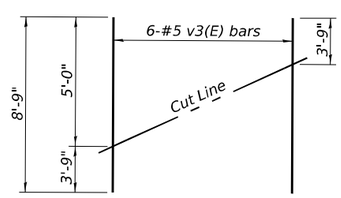

FIELD CUTTING DIAGRAM

Order v3(E) full length. Cut as shown and use remainder of bars in opposite wing.

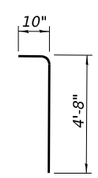

BAR v(E)

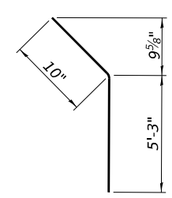

BAR h2(E)

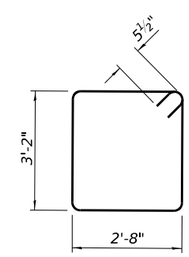

BAR s(E)

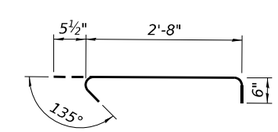

BAR s1(E)

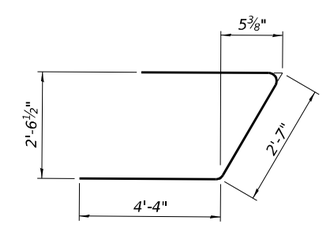

BAR u(E)

EFK•Moen Civil Engineering Design	USER NAME = $USER$	DESIGNED - KRH	REVISED -
		CHECKED - ACB	REVISED -
	PLOT SCALE =	DRAWN - KRH	REVISED -
	PLOT DATE = 3/11/2025	CHECKED - ACB	REVISED -

STATE OF ILLINOIS
DEPARTMENT OF TRANSPORTATION

SOUTH ABUTMENT
STRUCTURE NO. 038-0229 (S.B.)

SHEET 26 OF 37 SHEETS

F.A.I. RTE.	SECTION	COUNTY	TOTAL SHEETS	SHEET NO.
57	((38-7B)BR)BR	IROQUOIS	84	59

CONTRACT NO. 66M23
ILLINOIS FED. AID PROJECT

MODEL: Default
FILE NAME: O:\2022R3\IDOT\CAD CONNECT\22057.13 IDOT D3 PTB 204-028 WO 13 I-57 over Louis Creek Ph II\CADD Data\Bridge\Plotsheets\0380229\0230_66M23_026_Abutment.dgn
3/11/2025 10:08:06 AM

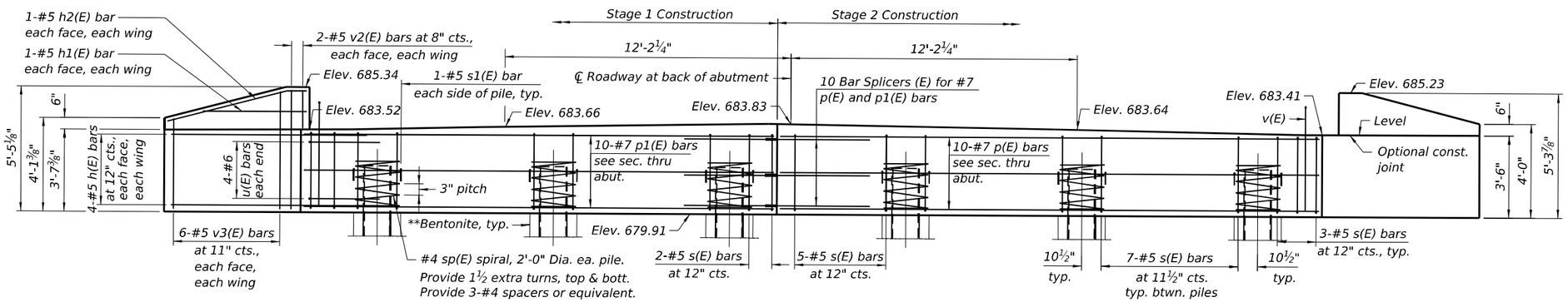

ELEVATION

(Looking North)

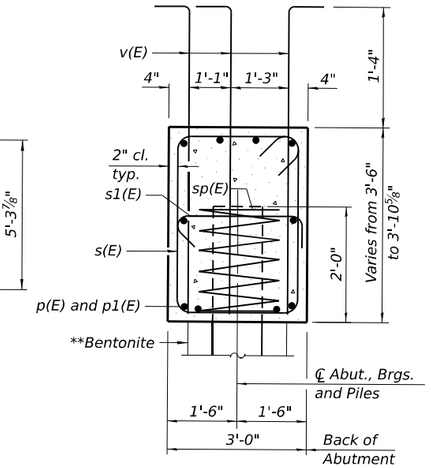

SEC. THRU ABUT.

Dimensions at right angles to abutment.

**Piles shall be driven through 2'-0" diameter precored holes extending to elevation 670.00 according to article 512.09(c) of the Standard Specifications except that the void space outside the pile shall be filled with bentonite according to the manufacturer's recommendations to achieve a Qu of 1.5 tsf. Cost included in driving piles.

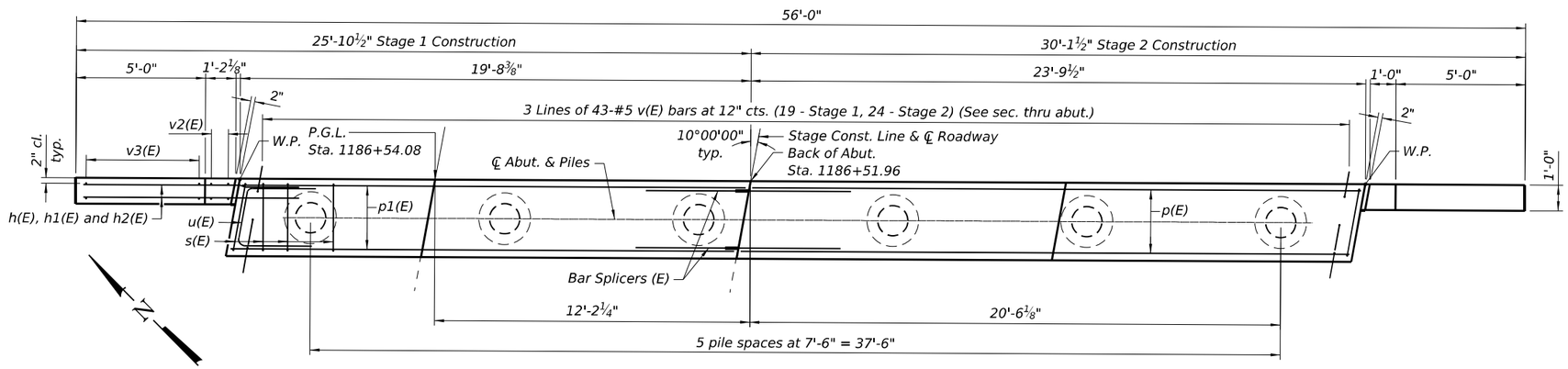

PLAN

BILL OF MATERIAL

	Bar	No.	Size	Length	Shape
	h(E)	16	#5	8'-7"	
	h1(E)	4	#5	4'-6"	
	h2(E)	4	#5	6'-1"	
	p(E)	10	#7	23'-6"	
	p1(E)	10	#7	19'-5"	
	s(E)	41	#5	12'-7"	
	s1(E)	12	#5	3'-8"	
*	sp(E)	6	#4	2'-0"	
	u(E)	8	#6	11'-3"	
	v(E)	129	#5	5'-6"	
	v2(E)	8	#5	5'-0"	
	v3(E)	24	#5	8'-9"	
	Structure Excavation		Cu. Yd.	49	
	Concrete Structures		Cu. Yd.	20.4	
	Reinforcement Bars, Epoxy Coated		Pound	3,060	
	Furnishing Metal Shell Piles 14" x 0.250"		Foot	190	
	Driving Piles		Foot	190	
	Test Piles Metal Shells		Each	1	
	Pile Shoes		Each	6	

For details of piles see sheet 31 of 37.
For details of bar splicers, see sheet 33 of 37.
*Length is height of spiral.

PILE DATA

Type: Metal Shell Piles 14" x 0.25" with pile shoes
Nominal Required Bearing: 293 k
Factored Resistance Available: 161 k
Est. Length: 38 ft
No. Production Piles: 5
No. Test Piles: 1

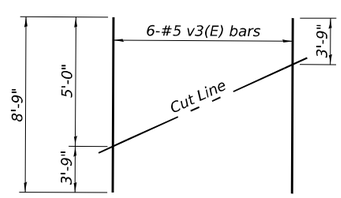

FIELD CUTTING DIAGRAM

Order v3(E) full length. Cut as shown and use remainder of bars in opposite wing.

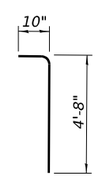

BAR v(E)

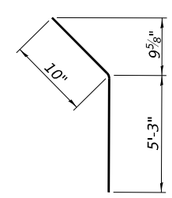

BAR h2(E)

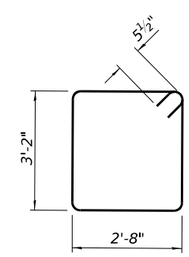

BAR s(E)

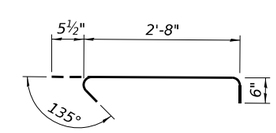

BAR s1(E)

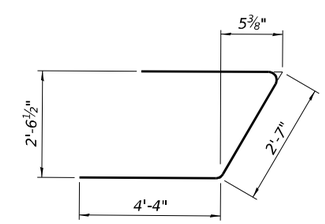

BAR u(E)

EFK•Moen Civil Engineering Design	USER NAME = $USER$	DESIGNED - KRH	REVISED -
		CHECKED - ACB	REVISED -
	PLOT SCALE =	DRAWN - KRH	REVISED -
	PLOT DATE = 3/11/2025	CHECKED - ACB	REVISED -

STATE OF ILLINOIS
DEPARTMENT OF TRANSPORTATION

NORTH ABUTMENT
STRUCTURE NO. 038-0230 (N.B.)

SHEET 27 OF 37 SHEETS

F.A.I. RTE.	SECTION	COUNTY	TOTAL SHEETS	SHEET NO.
57	((38-7B)BR)BR	IROQUOIS	84	60

CONTRACT NO. 66M23

ILLINOIS | FED. AID PROJECT

MODEL: Default
FILE NAME: O:\2022R3\IDOT\CAD CONNECT\22057.13 IDOT D3 PTB 204-028 WO 13 I-57 over Louis Creek Ph II\CADD Data\Bridge\Plotsheets\0380229k0230_66M23_027_Abutment.dgn

3/11/2025 10:08:10 AM

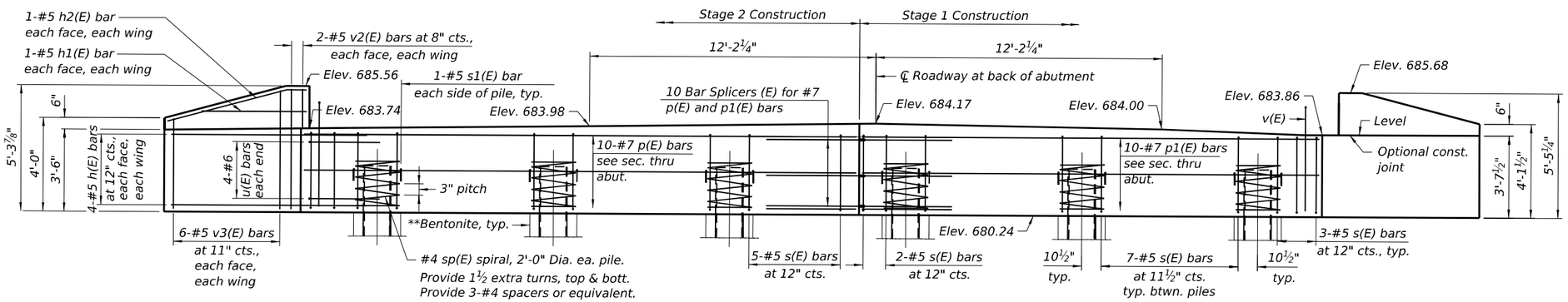

ELEVATION

(Looking South)

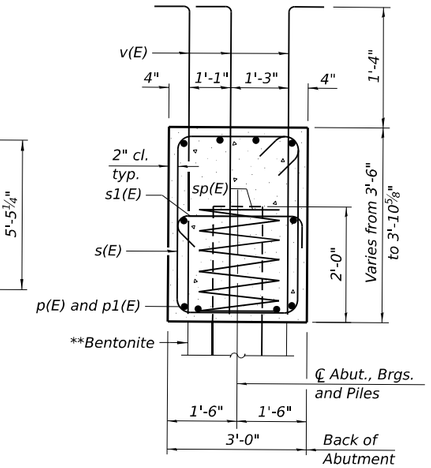

SEC. THRU ABUT.

Dimensions at right angles to abutment.

**Piles shall be driven through 2'-0" diameter precored holes extending to elevation 670.00 according to article 512.09(c) of the Standard Specifications except that the void space outside the pile shall be filled with bentonite according to the manufacturer's recommendations to achieve a Qu of 1.5 tsf. Cost included in driving piles.

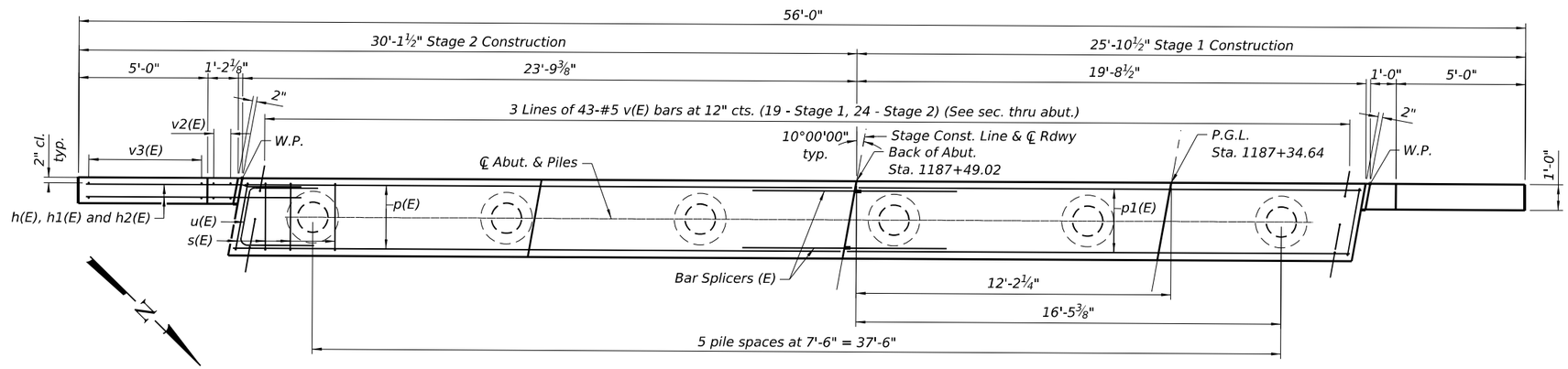

PLAN

BILL OF MATERIAL

	Bar	No.	Size	Length	Shape
	h(E)	16	#5	8'-7"	
	h1(E)	4	#5	4'-6"	
	h2(E)	4	#5	6'-1"	
	p(E)	10	#7	23'-6"	
	p1(E)	10	#7	19'-5"	
	s(E)	41	#5	12'-7"	
	s1(E)	12	#5	3'-8"	
*	sp(E)	6	#4	2'-0"	
	u(E)	8	#6	11'-3"	
	v(E)	129	#5	5'-6"	
	v2(E)	8	#5	5'-0"	
	v3(E)	24	#5	8'-9"	
	Structure Excavation			Cu. Yd.	48
	Concrete Structures			Cu. Yd.	20.4
	Reinforcement Bars, Epoxy Coated			Pound	3,060
	Furnishing Metal Shell Piles 14" x 0.250"			Foot	210
	Driving Piles			Foot	210
	Test Piles Metal Shells			Each	1
	Pile Shoes			Each	6

PILE DATA

Type: Metal Shell Piles 14" x 0.25" with pile shoes
Nominal Required Bearing: 293 k
Factored Resistance Available: 161 k
Est. Length: 42 ft
No. Production Piles: 5
No. Test Piles: 1

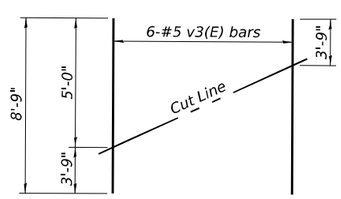

FIELD CUTTING DIAGRAM

Order v3(E) full length. Cut as shown and use remainder of bars in opposite wing.

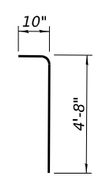

BAR v(E)

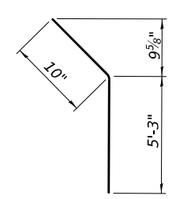

BAR h2(E)

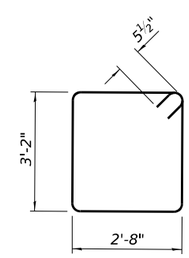

BAR s(E)

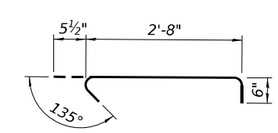

BAR s1(E)

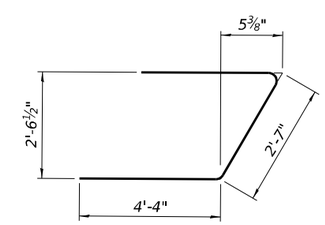

BAR u(E)

For details of piles see sheet 31 of 37.
For details of bar splicers, see sheet 33 of 37.
*Length is height of spiral

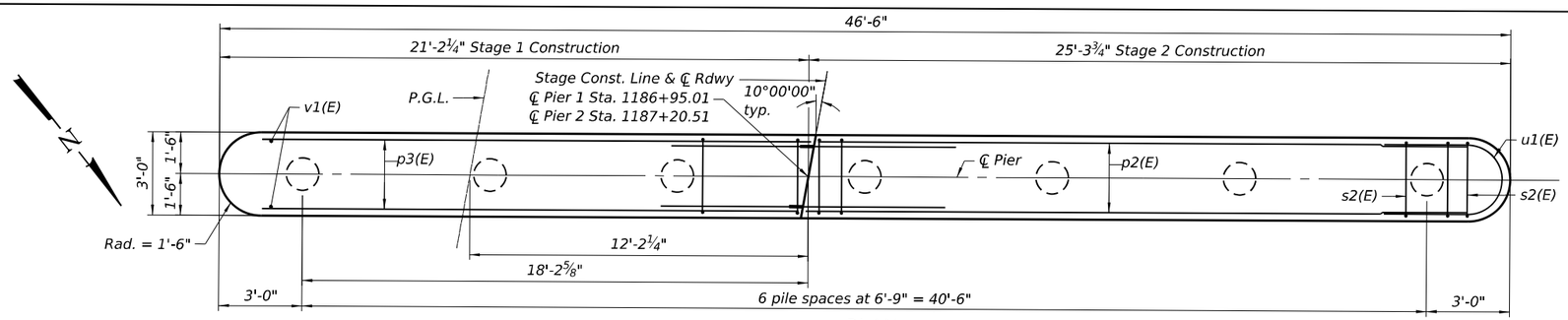

PLAN

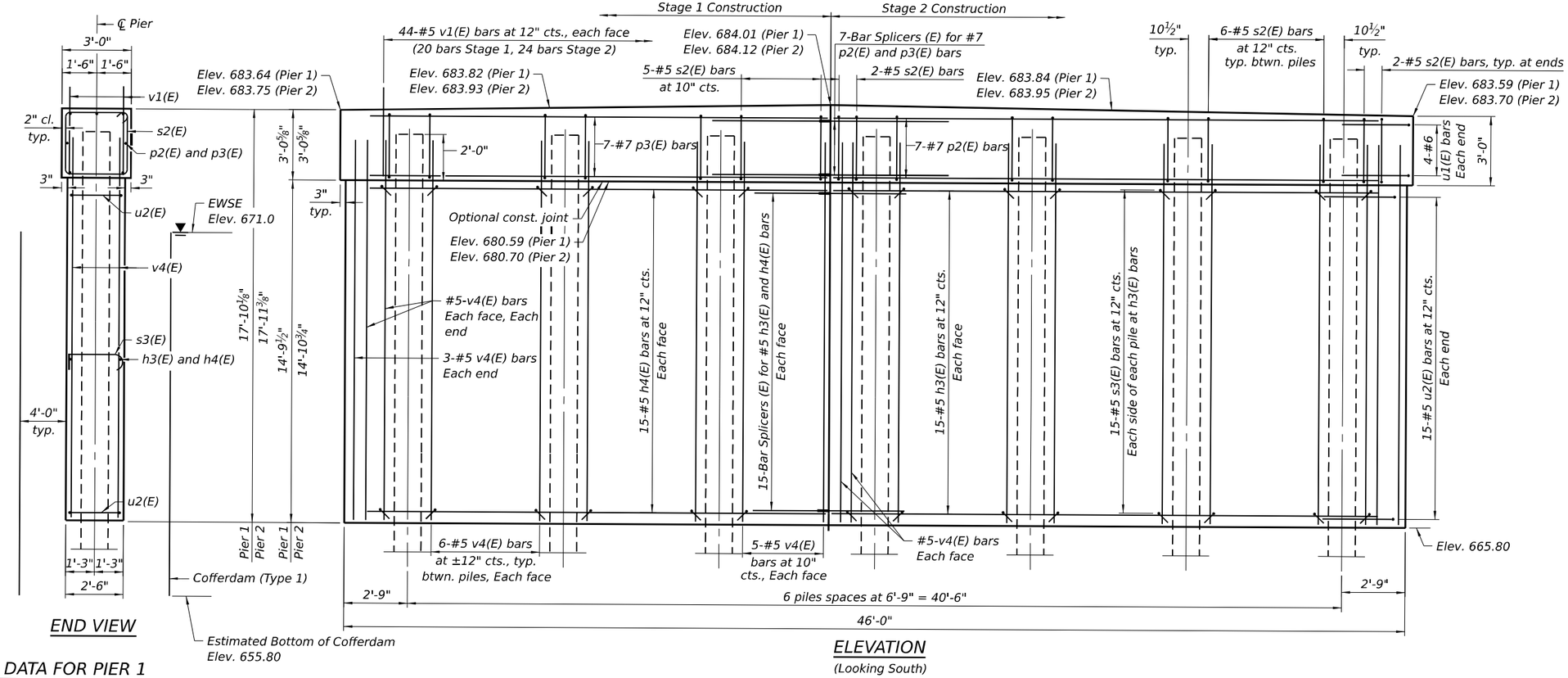

END VIEW

ELEVATION

(Looking South)

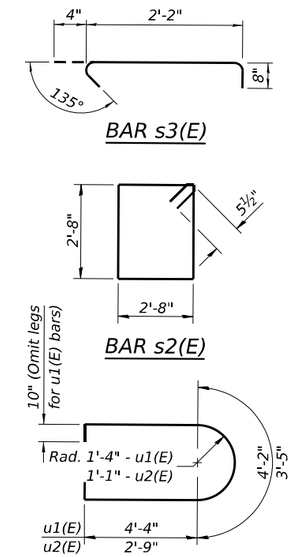

BAR s3(E)

BAR s2(E)

BARS u1(E) & u2(E)

TWO PIERS BILL OF MATERIAL

Bar	No.	Size	Length	Shape
h3(E)	60	#5	23'-8"	
h4(E)	60	#5	19'-10"	
p2(E)	14	#7	23'-6"	
p3(E)	14	#7	19'-6"	
s2(E)	82	#5	11'-7"	
s3(E)	420	#5	3'-2"	
u1(E)	16	#6	12'-10"	
u2(E)	60	#5	10'-7"	
v1(E)	176	#5	4'-3"	
v4(E)	176	#5	16'-9"	
Cofferdam Excavation		Cu. Yd.	180	
Cofferdam (Type 1) (Location-1)		Each	1	
Cofferdam (Type 1) (Location-2)		Each	1	
Concrete Structures		Cu. Yd.	156.2	
Reinforcement Bars, Epoxy Coated		Pound	11,160	
Furnishing Metal Shell Piles 14" x 0.250"		Foot	546	
Driving Piles		Foot	546	
Test Piles Metal Shells		Each	2	
Pile Shoes		Each	14	

Notes:
For details of piles, see sheet 31 of 37.
For details of bar splicers, see sheet 33 of 37.

PILE DATA FOR PIER 1

Type: Metal Shell Piles 14" x 0.25" on pile shoes
Nominal Required Bearing: 297 k
Factored Resistance Available: 132 k
Est. Length: 42 ft
No. Production Piles: 6
No. Test Piles: 1

PILE DATA FOR PIER 2

Type: Metal Shell Piles 14" x 0.25" on pile shoes
Nominal Required Bearing: 297 k
Factored Resistance Available: 132 k
Est. Length: 49 ft
No. Production Piles: 6
No. Test Piles: 1

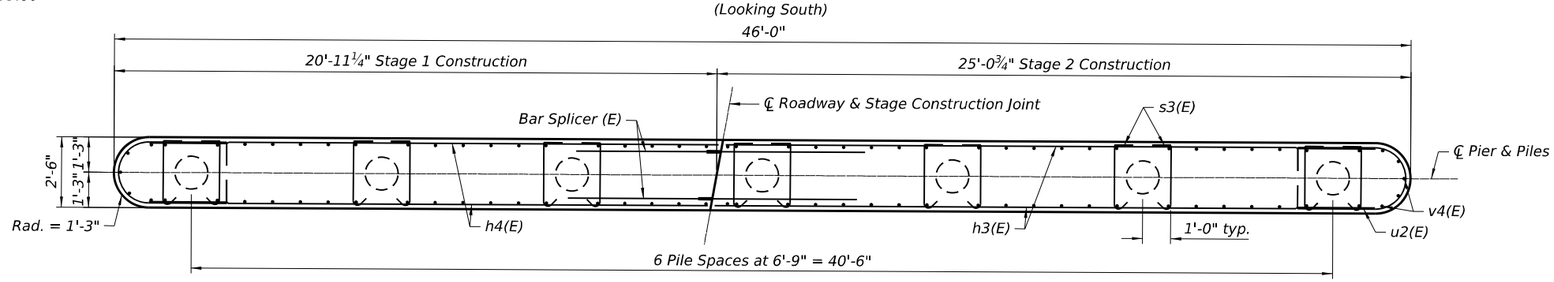

SECTION THRU WALL

USER NAME = $USER$	DESIGNED - KRH	REVISED -	
	CHECKED - ACB	REVISED -	
PLOT SCALE =	DRAWN - KRH	REVISED -	
PLOT DATE = 3/11/2025	CHECKED - ACB	REVISED -	

EFK•Moen Civil Engineering Design

STATE OF ILLINOIS
DEPARTMENT OF TRANSPORTATION

PIERS
STRUCTURE NO. 038-0229 (S.B.)

SHEET 29 OF 37 SHEETS

F.A.I. RTE.	SECTION	COUNTY	TOTAL SHEETS	SHEET NO.
57	((38-7B)BR)BR	IROQUOIS	84	62

CONTRACT NO. 66M23
ILLINOIS FED. AID PROJECT

MODEL: Default
FILE NAME: O:\2022R3\IDOT\CAD CONNECT\22057.13 IDOT D3 PTB 204-028 WO 13 I-57 over Louis Creek Ph II\CADD Data\Bridge\Plotsheets\0380229k0230_66M23_029_Piers.dgn
3/11/2025 10:08:17 AM

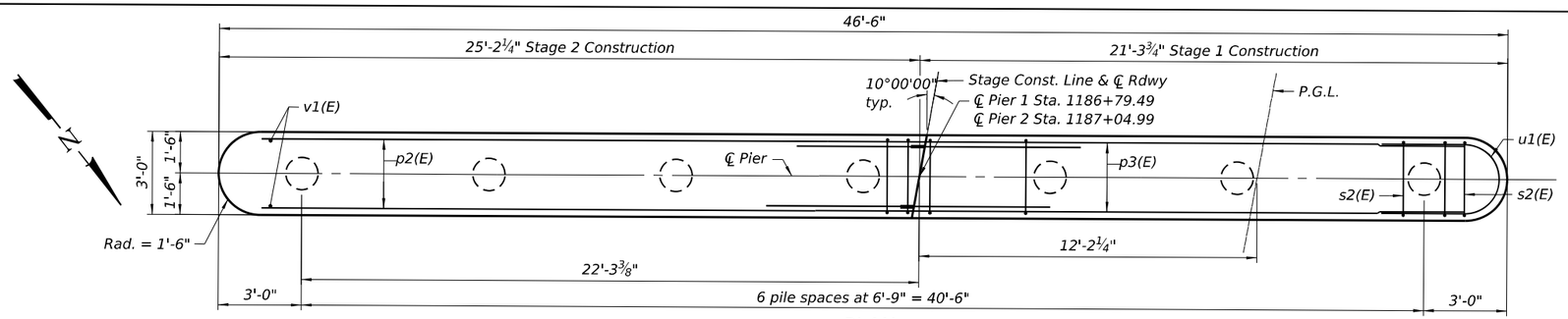

PLAN

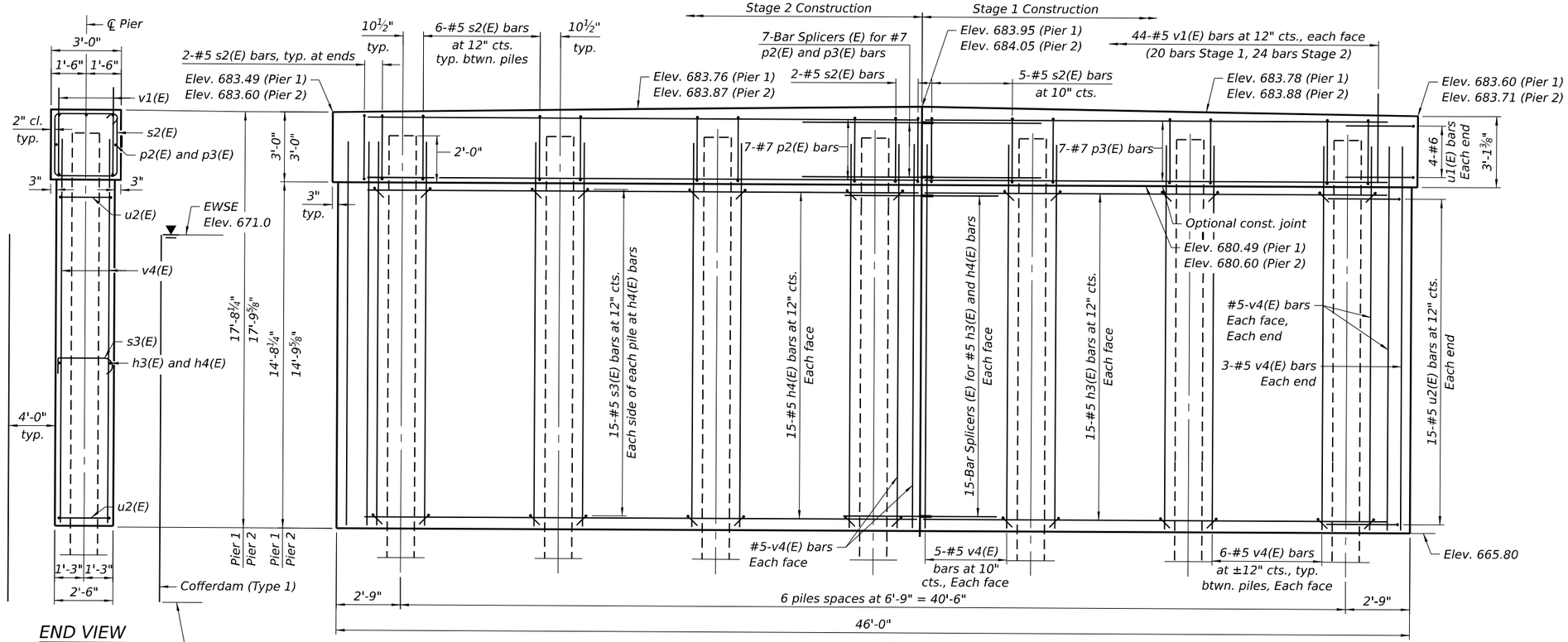

END VIEW

ELEVATION

(Looking South)

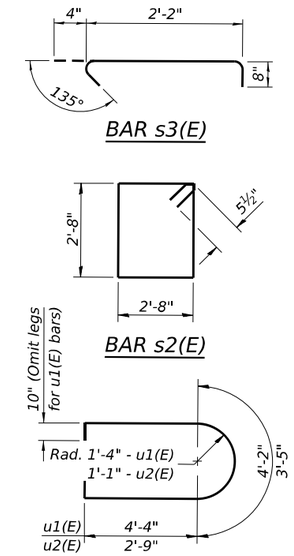

TWO PIERS BILL OF MATERIAL

Bar	No.	Size	Length	Shape
h3(E)	60	#5	23'-8"	
h4(E)	60	#5	19'-10"	
p2(E)	14	#7	23'-6"	
p3(E)	14	#7	19'-6"	
s2(E)	82	#5	11'-7"	
s3(E)	420	#5	3'-2"	
u1(E)	16	#6	12'-10"	
u2(E)	60	#5	10'-7"	
v1(E)	176	#5	4'-3"	
v4(E)	176	#5	16'-9"	
Cofferdam Excavation			Cu. Yd.	180
Cofferdam (Type 1) (Location-3)			Each	1
Cofferdam (Type 1) (Location-4)			Each	1
Concrete Structures			Cu. Yd.	155.7
Reinforcement Bars, Epoxy Coated			Pound	11,160
Furnishing Metal Shell Piles 14" x 0.250"			Foot	510
Driving Piles			Foot	510
Test Piles Metal Shells			Each	2
Pile Shoes			Each	14

Notes:
For details of piles, see sheet 31 of 37.
For details of bar splicers, see sheet 33 of 37.

PILE DATA FOR PIER 1

Type: Metal Shell Piles 14" x 0.25" on pile shoes
Nominal Required Bearing: 297 k
Factored Resistance Available: 132 k
Est. Length: 42 ft
No. Production Piles: 6
No. Test Piles: 1

PILE DATA FOR PIER 2

Type: Metal Shell Piles 14" x 0.25" on pile shoes
Nominal Required Bearing: 297 k
Factored Resistance Available: 132 k
Est. Length: 43 ft
No. Production Piles: 6
No. Test Piles: 1

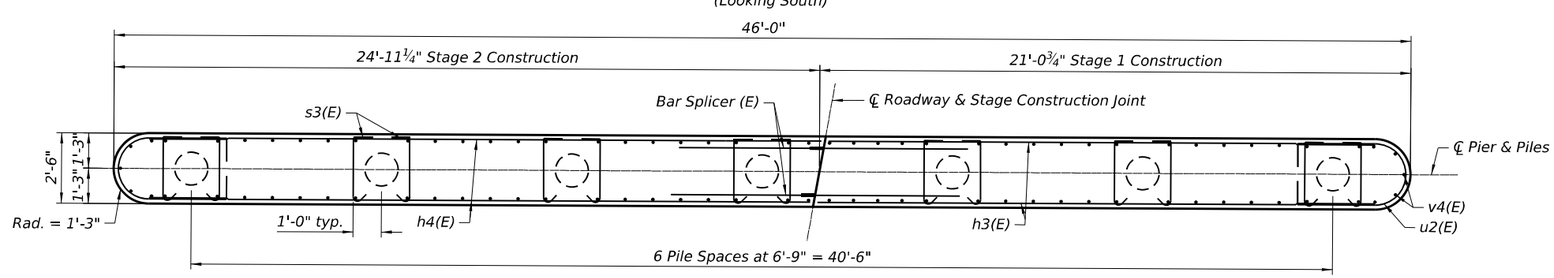

SECTION THRU WALL

EFK•Moen Civil Engineering Design	USER NAME = $USER$	DESIGNED - KRH	REVISED -
		CHECKED - ACB	REVISED -
	PLOT SCALE =	DRAWN - KRH	REVISED -
	PLOT DATE = 3/11/2025	CHECKED - ACB	REVISED -

STATE OF ILLINOIS
DEPARTMENT OF TRANSPORTATION

PIERS
STRUCTURE NO. 038-0230 (N.B.)

SHEET 30 OF 37 SHEETS

F.A.I. RTE.	SECTION	COUNTY	TOTAL SHEETS	SHEET NO.
57	((38-7B)BR)BR	IROQUOIS	84	63

CONTRACT NO. 66M23
ILLINOIS FED. AID PROJECT

MODEL: Default
FILE NAME: O:\2022R3\IDOT\CAD CONNECT\22057.13 IDOT D3 PTB 204-028 WO 13 I-57 over Louis Creek Ph II\CADD Data\Bridge\Plotsheets\0380229k0230_66M23_030_Piers.dgn
3/11/2025 10:08:20 AM

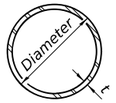

METAL SHELL PILE TABLE

Designation and outside diameter	Wall thickness t	Weight per foot (Lbs./ft.)	Inside volume (yd.³/ft.)
PP12	0.250"	31.40	0.0267
PP14	0.250"	36.75	0.0368
PP14	0.312"	45.65	0.0361
PP16	0.312"	52.32	0.0478
PP16	0.375"	62.64	0.0470

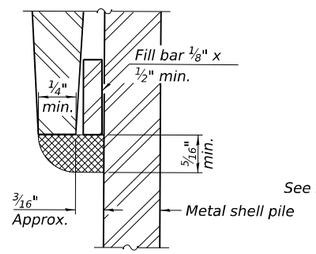

DETAIL A

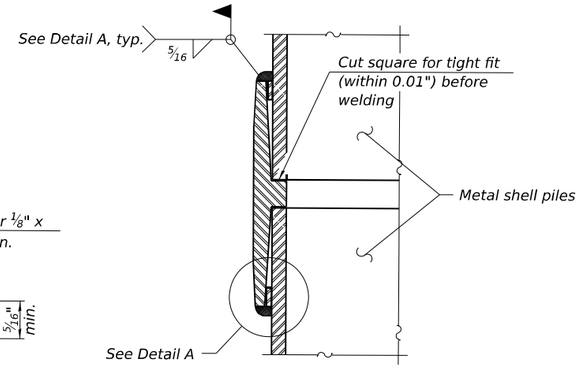

WELDED COMMERCIAL SPLICE

Notes:
The 1/8" x 1/2" min. fill bar may be constructed of 2 bars with a 1/8" max. gap between them.
Pile segments shall be driven to solid contact with splicer before welding.

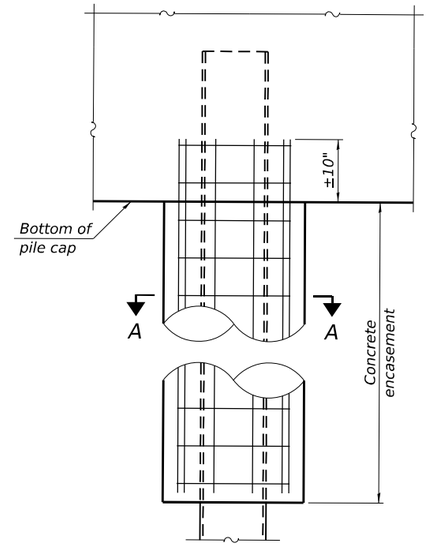

ELEVATION

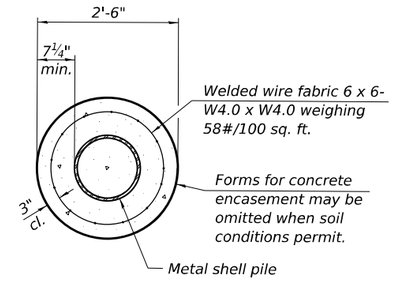

SECTION A-A

INDIVIDUAL PILE CONCRETE ENCASEMENT

(When specified)

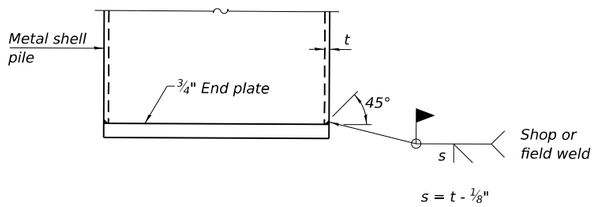

END PLATE ATTACHMENT

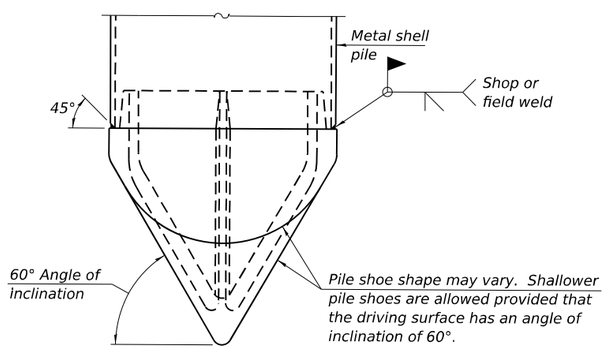

PILE SHOE ATTACHMENT

(When called for on the plans, the Contractor shall furnish metal shell pile shoes consisting of a single piece conical pile point as shown. The pile shoes shall be cast in one piece steel according to either ASTM A 148 Grade 80-50 or AASHTO M 103 Grade 65-35 and shall provide full bearing over the full circumference of the metal shell pile. The pile shoe shall have tapered leads to assure proper alignment and fitting and shall be secured to the pile with a circumferential weld).

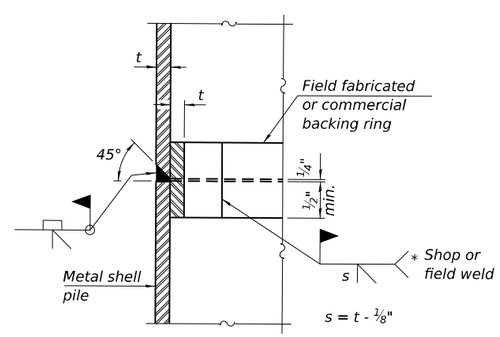

COMPLETE PENETRATION WELD SPLICE

* Field fabricated backing ring may be made from pile shell by removing segment to allow reducing circumference and vertically rejoin with partial joint penetration weld.

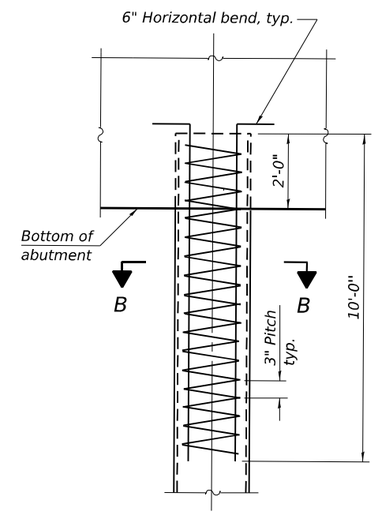

ELEVATION

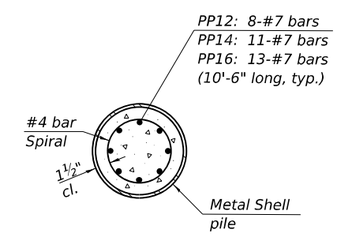

SECTION B-B

REINFORCEMENT AT ABUTMENTS

(Omit when concrete encasement is specified)

Note:
The metal shell piles shall be according to Article 1006.05 of the Standard Specifications.

F-MS 5-15-2023

EFK•Moen Civil Engineering Design

USER NAME = $USER$	DESIGNED - KRH	REVISED -	
	CHECKED - ACB	REVISED -	
PLOT SCALE =	DRAWN - KRH	REVISED -	
PLOT DATE = 3/11/2025	CHECKED - ACB	REVISED -	

STATE OF ILLINOIS
DEPARTMENT OF TRANSPORTATION

METAL SHELL PILE DETAILS
STRUCTURE NO. 038-0229 (S.B.) & 038-0230 (N.B.)
SHEET 31 OF 37 SHEETS

F.A.I. RTE.	SECTION	COUNTY	TOTAL SHEETS	SHEET NO.
57	((38-7B)BR)BR	IROQUOIS	84	64

CONTRACT NO. 66M23
ILLINOIS FED. AID PROJECT

MODEL: Default
FILE NAME: O:\2022R3\IDOT\CAD CONNECT\22057.13 IDOT D3 PTB 204-028 WO 13 I-57 over Louis Creek Ph II\CADD Data\Bridge\Plotsheets\0380229&0230_66M23_031_Pile Details.dgn
3/11/2025 10:08:22 AM

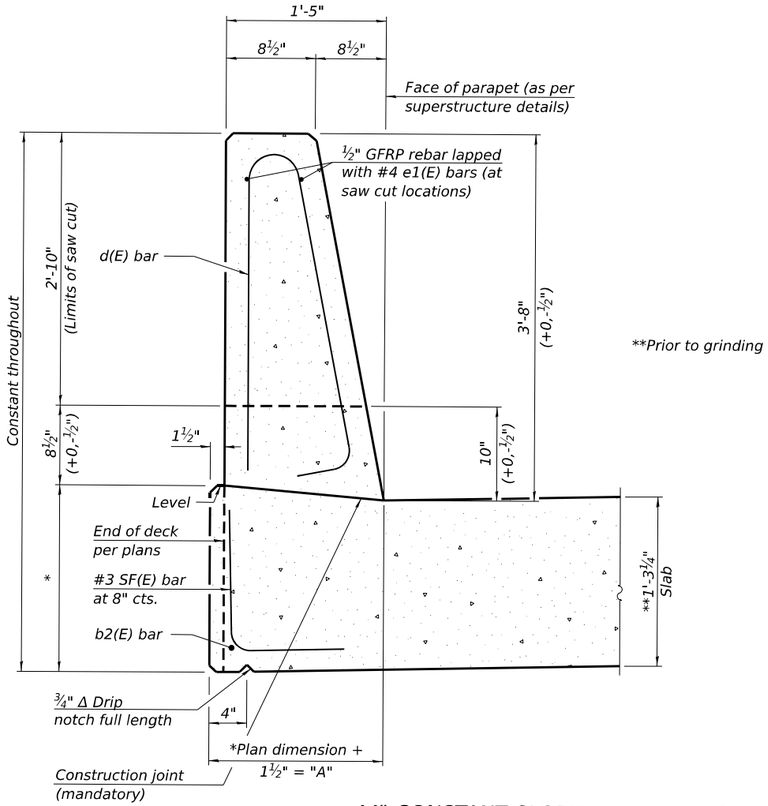

44" CONSTANT-SLOPE PARAPET SECTION

(Showing dimensions, d(E), and ½" Ø GFRP rebar)

* See Superstructure Details.

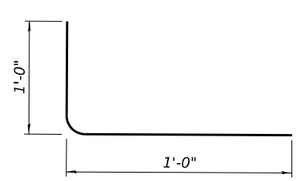

SF(E) BAR

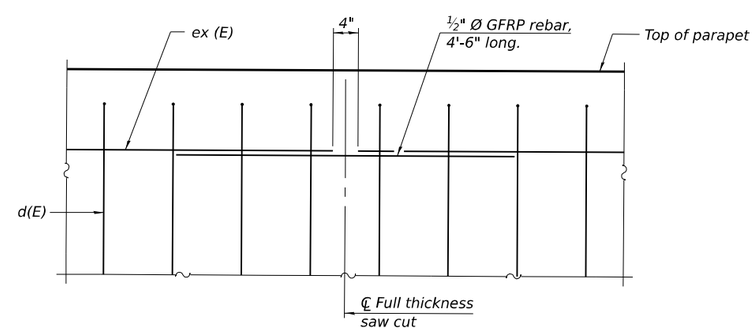

DETAIL - GFRP REBAR STIFFENING ELEVATION

(Place as shown in parapet section at each parapet joint location.)

Notes:
All dimensions shall remain the same as shown on superstructure details, except dimension "A" which is to be revised as shown.
Additional concrete needed to revise dimension "A" (39" and 44" parapets): Slab Bridge Superstructures: 0.00636 cu. yds./ft.
Place full depth aluminum sheets as shown on superstructure details.
Replace all cork joint filler locations with a full thickness saw cut.

MODEL: Default
FILE NAME: O:\2022R3\IDOT\CAD CONNECT\22057.13 IDOT D3 PTB 204-028 WO 13 I-57 over Louis Creek Ph II\CADD Data\Bridge\Plotsheets\0380229S0230_66M23_032_SIIpforming.dgn
3/11/2025 10:08:23 AM

EFK•Moen Civil Engineering Design	USER NAME = $USER$	DESIGNED - KRH	REVISED -	STATE OF ILLINOIS DEPARTMENT OF TRANSPORTATION
		CHECKED - ACB	REVISED -	
	PLOT SCALE =	DRAWN - KRH	REVISED -	
	PLOT DATE = 3/11/2025	CHECKED - ACB	REVISED -	

CONCRETE PARAPET SLIPFORMING OPTION
STRUCTURE NO. 038-0229 (S.B.) & 038-0230 (N.B.)
SHEET 32 OF 37 SHEETS

F.A.I. RTE.	SECTION	COUNTY	TOTAL SHEETS	SHEET NO.
57	((38-7B)BR)BR	IROQUOIS	84	65
		CONTRACT NO. 66M23		
	ILLINOIS	FED. AID PROJECT		

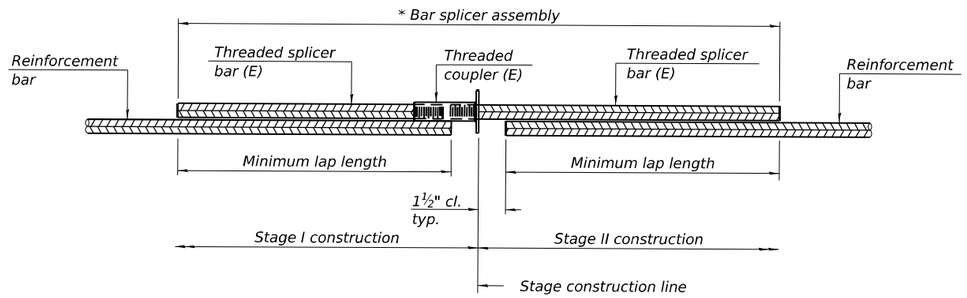

STANDARD BAR SPLICER ASSEMBLY PLAN

Only bar splicer assemblies as presented on the approved QPL list may be used.

Threaded splicer bar length = min. lap length + 1½" + thread length

* Epoxy not required on Bar Splicer Assembly components used in conjunction with black bars.

Location	Bar size	No. assemblies required	Minimum lap length
Deck	#5	24	3'-0"
Deck	#6	100	4'-0"
Deck	#7	302	4'-8"
Approach	#5	184	3'-4"
Approach	#8	240	5'-11"
Approach Footing	#5	160	3'-0"
Abutments	#7	40	5'-0"
Piers	#7	28	5'-0"
Piers	#5	120	3'-7"

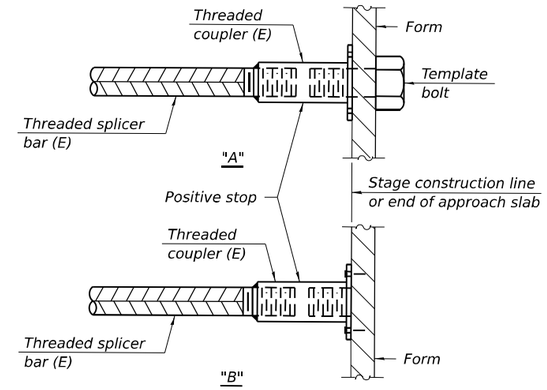

INSTALLATION AND SETTING METHODS

"A" : Set bar splicer assembly by means of a template bolt.
"B" : Set bar splicer assembly by nailing to wood forms or cementing to steel forms.
(E) : Indicates epoxy coating.

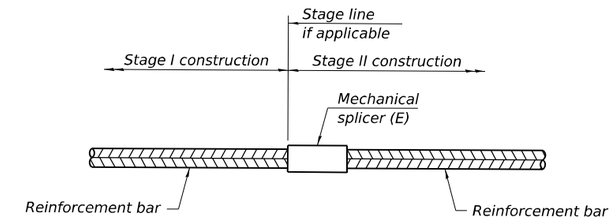

STANDARD MECHANICAL SPLICER

Location	Bar size	No. assemblies required

Notes:
Splicer bars shall be deformed with threaded ends and have a minimum 60 ksi yield strength.
All reinforcement shall be lapped and tied to the splicer bars.
Bar splicer assemblies shall be epoxy coated according to the requirements for reinforcement bars. See Section 508 of the Standard Specifications.
See approved list of bar splicer assemblies and mechanical splicers for alternatives.

BSD-1 5-15-2023

Illinois Department of Transportation
Division of Highways
Illinois Department of Transportation

SOIL BORING LOG

Date 8/17/22

ROUTE FAI 57 (I-57) DESCRIPTION I-57 over Louis Creek, 0.7 mi N of Buckley Interchange LOGGED BY Larry Myers

SECTION ((38-7B)BR)ES LOCATION NE 1/4, SEC. 22, TWP. 25N, RNG. 10E, 3rd PM,
Latitude , Longitude

COUNTY Iroquois DRILLING METHOD Hollow Stem Auger HAMMER TYPE CME Automatic

STRUCT. NO. 038-0152 (Exist.)
Station 1187+00

BORING NO. 1 (NE Quad.)
Station 1186+16
Offset 67.4 ft Rt.
Ground Surface Elev. 684.42 ft

Surface Water Elev. ft
Stream Bed Elev. ft

Groundwater Elev.:
First Encounter 634.4 ft ▼
Upon Completion 654.4 ft ▽
After ___ Hrs. ft

Description	Elev.	DEPTH (ft)	BLOWS (/6")	UCS Qu (tsf)	MOIST (%)
Augered Shoulder Stone, Black Silty Clay Loam Fill	681.92				
Very Stiff Black and Brown Silty Clay Loam Fill	678.42	-5	3 4 7	3.5 P	26
Very Stiff to Hard Brown and Gray Silty Clay Loam Till	669.92	-10	3 4 4	3.5 P	22
		-15	5 7 10	5.1 S	19
Very Stiff Gray Silty Clay Till with Minor Silt Pockets/Layers	647.42	-20	5 7 10	5.1 S	21
Very Stiff Gray Silty Clay Till with Minor Silt Pockets/Layers *(continued)*		-25	4 4 6	4.6 S	24
		-30	3 3 4	3.2 B	15
		-35	3 3 4	2.8 B	16
		-40	2 3 5	2.8 B	15
			3 3 5	3.1 B	23
			4 4 6	3.8 B	17
			4 4 6	3.8 B	15
			2 4 6	3.6 B	20
Hard Gray Silty Loam/Silty Clay Loam Till			7 8 10	4.2 S	13

The Unconfined Compressive Strength (UCS) Failure Mode is indicated by (B-Bulge, S-Shear, P-Penetrometer)
The SPT (N value) is the sum of the last two blow values in each sampling zone (AASHTO T206)

BBS, form 137 (Rev. 8-99)

Illinois Department of Transportation
Division of Highways
Illinois Department of Transportation

SOIL BORING LOG

Date 8/17/22

ROUTE FAI 57 (I-57) DESCRIPTION I-57 over Louis Creek, 0.7 mi N of Buckley Interchange LOGGED BY Larry Myers

SECTION ((38-7B)BR)ES LOCATION NE 1/4, SEC. 22, TWP. 25N, RNG. 10E, 3rd PM,
Latitude , Longitude

COUNTY Iroquois DRILLING METHOD Hollow Stem Auger HAMMER TYPE CME Automatic

STRUCT. NO. 038-0152 (Exist.)
Station 1187+00

BORING NO. 1 (NE Quad.)
Station 1186+16
Offset 67.4 ft Rt.
Ground Surface Elev. 684.42 ft

Surface Water Elev. ft
Stream Bed Elev. ft

Groundwater Elev.:
First Encounter 634.4 ft ▼
Upon Completion 654.4 ft ▽
After ___ Hrs. ft

Description	Elev.	DEPTH (ft)	BLOWS (/6")	UCS Qu (tsf)	MOIST (%)
Hard Gray Silty Loam/Silty Clay Loam Till *(continued)*			7 7 7	3.6 S	14
			4 6 8	3.2 S	14
	638.92	-45	5 8 12	4.8 S	10
Hard Pinkish Brown Silty Clay Loam Till	637.42		6 7 9	4.1 S	12
Hard and Very Stiff Gray Silty Clay Loam Till	633.42	-50	12 14 19	4.8 S	13
Dense Gray Fine Sand to Course Gravel		-55	30 25 26	*	9
*Washed Sample 52.5'-54.0'	628.92	-60	17 15 16	5.3 S*	10
*Washed Sample 55.0'-56.5'	627.92				
Hard Gray Silty Loam Till with Sand Seams					
End of Boring					

The Unconfined Compressive Strength (UCS) Failure Mode is indicated by (B-Bulge, S-Shear, P-Penetrometer)
The SPT (N value) is the sum of the last two blow values in each sampling zone (AASHTO T206)

BBS, form 137 (Rev. 8-99)

SOIL BORING 038-0151,0152.GPJ IL_DOT.GDT 9/27/22

MODEL: Default
FILE NAME: O:\2022R3\IDOTCAD CONNECT\22057.13 IDOT D3 PTB 204-028 WO 13 I-57 over Louis Creek Ph II\CADD Data\Bridge\Plotsheets\03802296\0230_66M23_034_Soil Boring Logs.dgn

3/11/2025 10:08:31 AM

EFK•Moen
Civil Engineering Design

USER NAME = $USER$	DESIGNED - KRH	REVISED -	
	CHECKED - ACB	REVISED -	
PLOT SCALE =	DRAWN - KRH	REVISED -	
PLOT DATE = 3/11/2025	CHECKED - ACB	REVISED -	

STATE OF ILLINOIS
DEPARTMENT OF TRANSPORTATION

SOIL BORING LOGS
STRUCTURE NO. 038-0229 (S.B.) & 038-0230 (N.B.)
SHEET 34 OF 37 SHEETS

F.A.I. RTE.	SECTION	COUNTY	TOTAL SHEETS	SHEET NO.
57	((38-7B)BR)BR	IROQUOIS	84	67

CONTRACT NO. 66M23
ILLINOIS FED. AID PROJECT

Illinois Department of Transportation
Division of Highways
Illinois Department of Transportation

SOIL BORING LOG

Date 8/18/22

ROUTE FAI 57 (I-57) DESCRIPTION I-57 over Louis Creek, 0.7 mi N of Buckley Interchange LOGGED BY Larry Myers

SECTION ((38-7B)BR)ES LOCATION NE 1/4, SEC. 22, TWP. 25N, RNG. 10E, 3rd PM, Latitude , Longitude

COUNTY Iroquois DRILLING METHOD Hollow Stem Auger HAMMER TYPE CME Automatic

STRUCT. NO. 038-0151 (Exist.)
Station 1187+00

BORING NO. 2 (SW Quad.)
Station 1187+75
Offset 68.6 ft Rt.
Ground Surface Elev. 685.29 ft

Surface Water Elev. ft
Stream Bed Elev. ft

Groundwater Elev.:
First Encounter 635.3 ft ▼
Upon Completion 665.3 ft ▽
After ___ Hrs. ft

Description	Elev.	DEPTH (ft)	BLOWS (/6")	UCS Qu (tsf)	MOIST (%)
Augered Shoulder Stone, Brown Silty Clay Loam Fill and Sand and Gravel Fill	682.79				
Very Stiff to Hard Black Silty Clay Loam Fill	680.29		4		
			5 7	4.0 P	22
Very Stiff to Hard Brown and Gray Silty Clay Loam Till		-5	3		
			3 5	3.0 P	23
			6		
			8 12	5.1 S	19
		-10	5		
			5 8	4.9 S	21
Very Stiff Gray Silty Clay Till	673.29		3		
			4 5	3.2 B	22
		-15	3		
			4 5	3.8 B	25
			2		
			3 4	3.0 B	27
		-20			
Very Stiff Gray Silty Clay Till (continued)			2		
			3 3	2.1 B	27
			2		
			3 5	2.6 B	18
		-25	3		
			4 6	2.8 B	18
			3		
			4 5	2.6 B	16
		-30	1		
			2 4	1.8 B	16
			3		
			4 5	2.6 B	25
		-35	3		
			4 6	2.8 B	25
			3		
			4 6	2.6 B	26
		-40			

The Unconfined Compressive Strength (UCS) Failure Mode is indicated by (B-Bulge, S-Shear, P-Penetrometer)
The SPT (N value) is the sum of the last two blow values in each sampling zone (AASHTO T206)

BBS, form 137 (Rev. 8-99)

SOIL BORING 038-0151.0152.GPJ IL_DOT.GDT 9/27/22

Illinois Department of Transportation
Division of Highways
Illinois Department of Transportation

SOIL BORING LOG

Date 8/18/22

ROUTE FAI 57 (I-57) DESCRIPTION I-57 over Louis Creek, 0.7 mi N of Buckley Interchange LOGGED BY Larry Myers

SECTION ((38-7B)BR)ES LOCATION NE 1/4, SEC. 22, TWP. 25N, RNG. 10E, 3rd PM, Latitude , Longitude

COUNTY Iroquois DRILLING METHOD Hollow Stem Auger HAMMER TYPE CME Automatic

STRUCT. NO. 038-0151 (Exist.)
Station 1187+00

BORING NO. 2 (SW Quad.)
Station 1187+75
Offset 68.6 ft Rt.
Ground Surface Elev. 685.29 ft

Surface Water Elev. ft
Stream Bed Elev. ft

Groundwater Elev.:
First Encounter 635.3 ft ▼
Upon Completion 665.3 ft ▽
After ___ Hrs. ft

Description	Elev.	DEPTH (ft)	BLOWS (/6")	UCS Qu (tsf)	MOIST (%)
Very Stiff Gray Silty Clay Till (continued)			3		
			4 5	2.6 B	24
	643.29				
Very Stiff to Hard Gray Silty Loam/Silty Clay Loam Till			4		
			6 8	3.6 S	12
		-45	6		
			8 10	4.6 S	12
			5		
			8 9	4.4 S	15
	635.79				
Medium to Dense Gray Fine Sand to Medium Gravel		▼ -50	3		
			3 10		12
			8		
			15 31		15
	630.79				
Hard (Very Dense) Gray Sandy Loam/Loamy Sand/Gravel		-55	30		
			40 61		8
	628.79				
End of Boring					
		-60			

The Unconfined Compressive Strength (UCS) Failure Mode is indicated by (B-Bulge, S-Shear, P-Penetrometer)
The SPT (N value) is the sum of the last two blow values in each sampling zone (AASHTO T206)

BBS, form 137 (Rev. 8-99)

SOIL BORING 038-0151.0152.GPJ IL_DOT.GDT 9/27/22

Illinois Department of Transportation
Division of Highways
Illinois Department of Transportation

SOIL BORING LOG

Date 8/19/22

ROUTE FAI 57 (I-57) DESCRIPTION I-57 over Louis Creek, 0.7 mi N of Buckley Interchange LOGGED BY Larry Myers

SECTION ((38-7B)BR)ES LOCATION NE 1/4, SEC. 22, TWP. 25N, RNG. 10E, 3rd PM,
Latitude , Longitude

COUNTY Iroquois DRILLING METHOD Hollow Stem Auger HAMMER TYPE CME Automatic

STRUCT. NO. 038-0151 (Exist.)
Station 1187+00

BORING NO. 3 (N Median)
Station 1186+42
Offset 18.3 ft Rt.
Ground Surface Elev. 684.57 ft

Surface Water Elev. ft
Stream Bed Elev. ft

Groundwater Elev.:
First Encounter 637.1 ft ▼
Upon Completion 659.6 ft ▽
After ___ Hrs. ft

Description	Elev.	DEPTH (ft)	BLOWS (/6")	UCS Qu (tsf)	MOIST (%)
Augered Black Silty Clay Loam fill	682.07				
Very Stiff Black Silty Clay Loam Fill	680.07		5		
			5 6	3.5 P	27
Very Stiff to Hard Brown and Gray Silty Clay Loam Till		-5	3		
			3 5	3.0 P	21
			6		
			8 12	5.1 S	20
		-10	4		
			5 8	4.8 S	23
			3		
			3 5	4.4 S	27
Very Stiff Gray Silty Clay Loam Till	670.07	-15	1		
			3 4	2.4 B	26
			1		
			3 4	2.6 B	16
		-20			
Very Stiff Gray Silty Clay Loam Till *(continued)*			2		
			4 4	2.8 B	16
			2		
Silt Layers at 23'			3 5	2.4 B	17
		▽ -25	2		
			3 4	2.6 B	14
			1		
			3 4	2.4 B	18
	655.07				
Very Stiff Gray Silty Clay Till		-30	3		
			5 6	3.4 B	20
			1		
			3 5	2.8 B	24
		-35	2		
			3 5	2.8 B	24
			1		
			2 3	2.1 B	29
	645.07	-40			

The Unconfined Compressive Strength (UCS) Failure Mode is indicated by (B-Bulge, S-Shear, P-Penetrometer)
The SPT (N value) is the sum of the last two blow values in each sampling zone (AASHTO T206)

BBS, form 137 (Rev. 8-99)

Illinois Department of Transportation
Division of Highways
Illinois Department of Transportation

SOIL BORING LOG

Date 8/19/22

ROUTE FAI 57 (I-57) DESCRIPTION I-57 over Louis Creek, 0.7 mi N of Buckley Interchange LOGGED BY Larry Myers

SECTION ((38-7B)BR)ES LOCATION NE 1/4, SEC. 22, TWP. 25N, RNG. 10E, 3rd PM,
Latitude , Longitude

COUNTY Iroquois DRILLING METHOD Hollow Stem Auger HAMMER TYPE CME Automatic

STRUCT. NO. 038-0151 (Exist.)
Station 1187+00

BORING NO. 3 (N Median)
Station 1186+42
Offset 18.3 ft Rt.
Ground Surface Elev. 684.57 ft

Surface Water Elev. ft
Stream Bed Elev. ft

Groundwater Elev.:
First Encounter 637.1 ft ▼
Upon Completion 659.6 ft ▽
After ___ Hrs. ft

Description	Elev.	DEPTH (ft)	BLOWS (/6")	UCS Qu (tsf)	MOIST (%)
Very Stiff to Hard Gray Silty Loam/Silty Clay Till *(continued)*			4		
			6 9	3.8 S	13
			3		
			5 8	3.8 S	14
		-45	5		
			7 11	4.8 S	11
Sand Layer at 47'		▼	11		
			16 17	6.4 S	13
	635.07				
Fine Sand to Medium Gravel	634.57	-50			
15' Blow in End of Boring					
		-55			
		-60			

The Unconfined Compressive Strength (UCS) Failure Mode is indicated by (B-Bulge, S-Shear, P-Penetrometer)
The SPT (N value) is the sum of the last two blow values in each sampling zone (AASHTO T206)

BBS, form 137 (Rev. 8-99)

SOIL BORING 038-0151,0152.GPJ IL_DOT.GDT 9/27/22

MODEL: Default
FILE NAME: O:\2022R3\IDOT\CAD CONNECT\22057-13 IDOT D3 PTB 204-028 WO 13 I-57 over Louis Creek Ph II\CADD Data\Bridge\Plotsheets\038022960230_66M23_036_Soil Boring Logs.dgn
3/11/2025 10:08:41 AM

EFK•Moen
Civil Engineering Design

USER NAME = $USER$	DESIGNED - KRH	REVISED -	
	CHECKED - ACB	REVISED -	
PLOT SCALE =	DRAWN - KRH	REVISED -	
PLOT DATE = 3/11/2025	CHECKED - ACB	REVISED -	

STATE OF ILLINOIS
DEPARTMENT OF TRANSPORTATION

SOIL BORING LOGS
STRUCTURE NO. 038-0229 (S.B.) & 038-0230 (N.B.)
SHEET 36 OF 37 SHEETS

F.A.I. RTE.	SECTION	COUNTY	TOTAL SHEETS	SHEET NO.
57	((38-7B)BR)BR	IROQUOIS	84	69

CONTRACT NO. 66M23
ILLINOIS FED. AID PROJECT

Illinois Department of Transportation
Division of Highways
Illinois Department of Transportation

SOIL BORING LOG

Date 8/22/22

ROUTE FAI 57 (I-57) DESCRIPTION I-57 over Louis Creek, 0.7 mi N of Buckley Interchange LOGGED BY Larry Myers

SECTION ((38-7B)BR)ES LOCATION NE 1/4, SEC. 22, TWP. 25N, RNG. 10E, 3rd PM,
Latitude , Longitude

COUNTY Iroquois DRILLING METHOD Hollow Stem Auger HAMMER TYPE CME Automatic

STRUCT. NO. 038-0152 (Exist.)
Station 1187+00

BORING NO. 4 (S Median)
Station 1187+76
Offset 20.1 ft Lt.
Ground Surface Elev. 685.09 ft

Surface Water Elev. ft
Stream Bed Elev. ft

Groundwater Elev.:
First Encounter 635.1 ft ▼
Upon Completion 665.1 ft ▽
After ___ Hrs. ___ ft

Description	Elev.	DEPTH (ft)	BLOWS (/6")	UCS Qu (tsf)	MOIST (%)
Augered Shoulder Stone, Black Silty Clay Loam Fill	682.59				
Very Stiff Gray and Brown Silty Clay Fill	680.59	5	6 8	3.5 P	27
Hard to Very Stiff Brown and Gray Silty Clay Till		-5	3		
			3 6	4.1 S	20
			4		
			6 8	4.6 S	20
		-10	4		
			5 6	4.1 S	23
			3		
			3 5	3.6 B	24
Very Stiff Gray Silty Clay Till	670.59	-15	2		
			3 5	3.4 B	24
			2		
			3 4	3.0 B	28
	665.59	-20			
Very Stiff Gray/Brown Silty Clay Loam Till *(continued)*			2		
			3 4	2.8 B	16
			3		
			4 6	3.1 B	15
	660.59				
Very Stiff Gray Silty Clay Till		-25	3		
			4 5	2.8 B	16
			1		
			3 5	2.6 B	17
		-30	3		
			4 6	2.8 B	17
			3		
			4 5	2.8 B	16
		-35	2		
			4 6	3.0 B	25
Sand and Silt at 37.5'			1		
			2 2		22
		-40			

The Unconfined Compressive Strength (UCS) Failure Mode is indicated by (B-Bulge, S-Shear, P-Penetrometer)
The SPT (N value) is the sum of the last two blow values in each sampling zone (AASHTO T206)

BBS, form 137 (Rev. 8-99)

SOIL BORING 038-0151,0152.GPJ IL_DOT.GDT 9/27/22

Illinois Department of Transportation
Division of Highways
Illinois Department of Transportation

SOIL BORING LOG

Date 8/22/22

ROUTE FAI 57 (I-57) DESCRIPTION I-57 over Louis Creek, 0.7 mi N of Buckley Interchange LOGGED BY Larry Myers

SECTION ((38-7B)BR)ES LOCATION NE 1/4, SEC. 22, TWP. 25N, RNG. 10E, 3rd PM,
Latitude , Longitude

COUNTY Iroquois DRILLING METHOD Hollow Stem Auger HAMMER TYPE CME Automatic

STRUCT. NO. 038-0152 (Exist.)
Station 1187+00

BORING NO. 4 (S Median)
Station 1187+76
Offset 20.1 ft Lt.
Ground Surface Elev. 685.09 ft

Surface Water Elev. ft
Stream Bed Elev. ft

Groundwater Elev.:
First Encounter 635.1 ft ▼
Upon Completion 665.1 ft ▽
After ___ Hrs. ___ ft

Description	Elev.	DEPTH (ft)	BLOWS (/6")	UCS Qu (tsf)	MOIST (%)
Very Stiff Gray Silty Clay Till *(continued)*			1		
			3 6	3.2 B	27
	643.09				
Very Stiff to Hard Gray Silty Clay Loam/Silty Loam Till with Silt Pockets			3		
			5 6	3.8 S	15
		-45	4		
			6 9	4.0 S	12
			12		
			15 16	5.7 S	11
	635.09 ▼	-50			
Dense Fine Sand to Medium Gravel - Free Water			WH		
			WH WH		15
WH = Weight of Hammer			12		
			20 22		17
	630.09	-55			
Hard Gray Silty Clay Loam/Silty Loam Till with Sand Layers			10		
			14 19	5.8 S	12
	628.59				
End of Boring					
		-60			

The Unconfined Compressive Strength (UCS) Failure Mode is indicated by (B-Bulge, S-Shear, P-Penetrometer)
The SPT (N value) is the sum of the last two blow values in each sampling zone (AASHTO T206)

BBS, form 137 (Rev. 8-99)

SOIL BORING 038-0151,0152.GPJ IL_DOT.GDT 9/27/22

MODEL: Default
FILE NAME: O:\2022R3\IDOT\CAD CONNECT\22057.13 IDOT D3 PTB 204-028 WO 13 I-57 over Louis Creek Ph II\CADD Data\Bridge\Plotsheets\0380229\60230_66M23_037_Soil Boring Logs.dgn

3/11/2025 10:08:45 AM

EFK•Moen
Civil Engineering Design

USER NAME = $USER$	DESIGNED - KRH	REVISED -	
	CHECKED - ACB	REVISED -	
PLOT SCALE =	DRAWN - KRH	REVISED -	
PLOT DATE = 3/11/2025	CHECKED - ACB	REVISED -	

STATE OF ILLINOIS
DEPARTMENT OF TRANSPORTATION

SOIL BORING LOGS
STRUCTURE NO. 038-0229 (S.B.) & 038-0230 (N.B.)
SHEET 37 OF 37 SHEETS

F.A.I. RTE.	SECTION	COUNTY	TOTAL SHEETS	SHEET NO.
57	((38-7B)BR)BR	IROQUOIS	84	70
		CONTRACT NO. 66M23		
	ILLINOIS	FED. AID PROJECT		

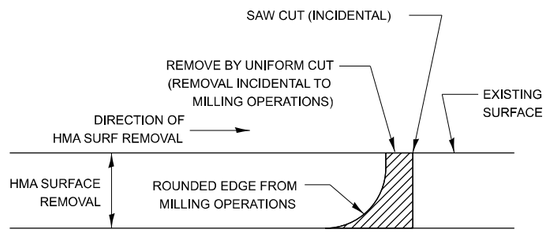

NOTE:

WHEN MILLING OPERATIONS PRODUCE A ROUNDED EDGE, THEN A SAW CUT SHALL BE USED TO MANUFACTURE A PERPENDICULAR EDGE AS SHOWN IN THE DETAIL. THE ENGINEER SHALL BE THE SOLE JUDGE CONCERNING THE USE OF THIS DETAIL

HMA BUTT JOINT SAW CUTS

406-8

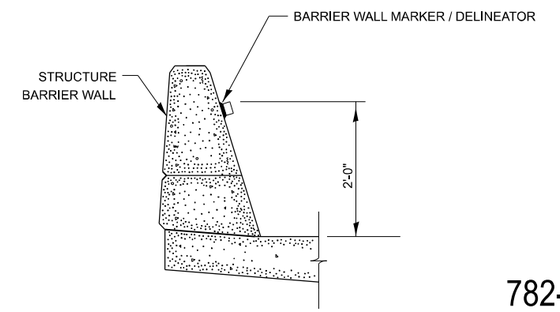

782-4

BARRIER WALL MARKER

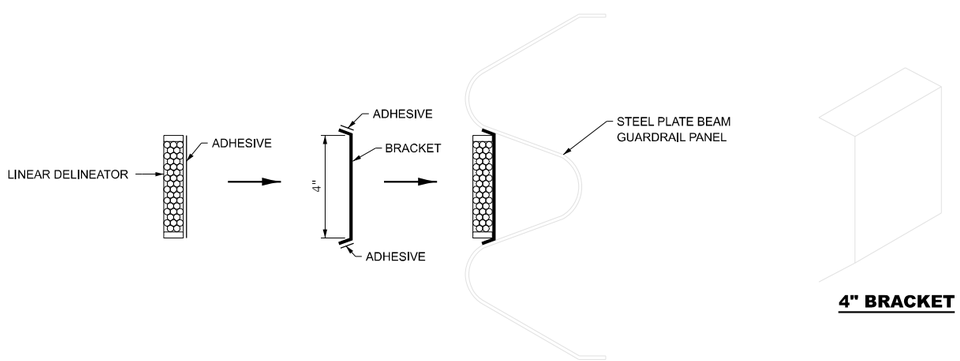

4" BRACKET

LINEAR DELINEATOR APPLICATION TO STANDARD GALVANIZED GUARDRAIL

LINEATOR DELINEATOR SHALL BE APLLIED ACCORDING TO THE MANUFACTURER'S RECOMMENDATIONS

782-5

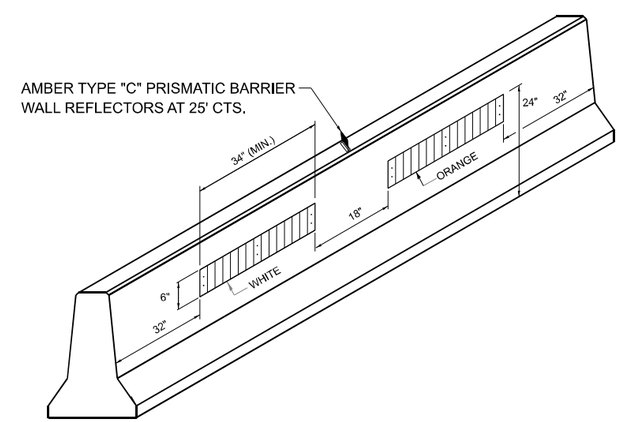

LINEAR DELINEATOR PANELS FOR TEMPORARY CONCRETE BARRIER

782-6

MODEL: D3 Details [Sheet]
FILE NAME: O:\2022R3\IDOTCAD CONNECT\22057.13 IDOT D3 PTB 204-028 WO 13 I-57 over Louis Creek Ph II\CADD Data\Sheets\D366M23-sht-districtdetails.dgn

EFK•Moen
Civil Engineering Design

USER NAME = JBerggren	DESIGNED -	REVISED -	STATE OF ILLINOIS DEPARTMENT OF TRANSPORTATION
	DRAWN -	REVISED -	
	CHECKED -	REVISED -	
PLOT DATE = 3/18/2025	DATE -	REVISED -	

I-57 OVER LOUIS CREEK
DISTRICT 3 DETAILS

SCALE: | SHEET 1 OF 4 SHEETS | STA. | TO STA.

F.A.I RTE.	SECTION	COUNTY	TOTAL SHEETS	SHEET NO.
57	((38-7B)BR)BR	IROQUOIS	84	71

CONTRACT NO. 66M23

ILLINOIS | FED. AID PROJECT

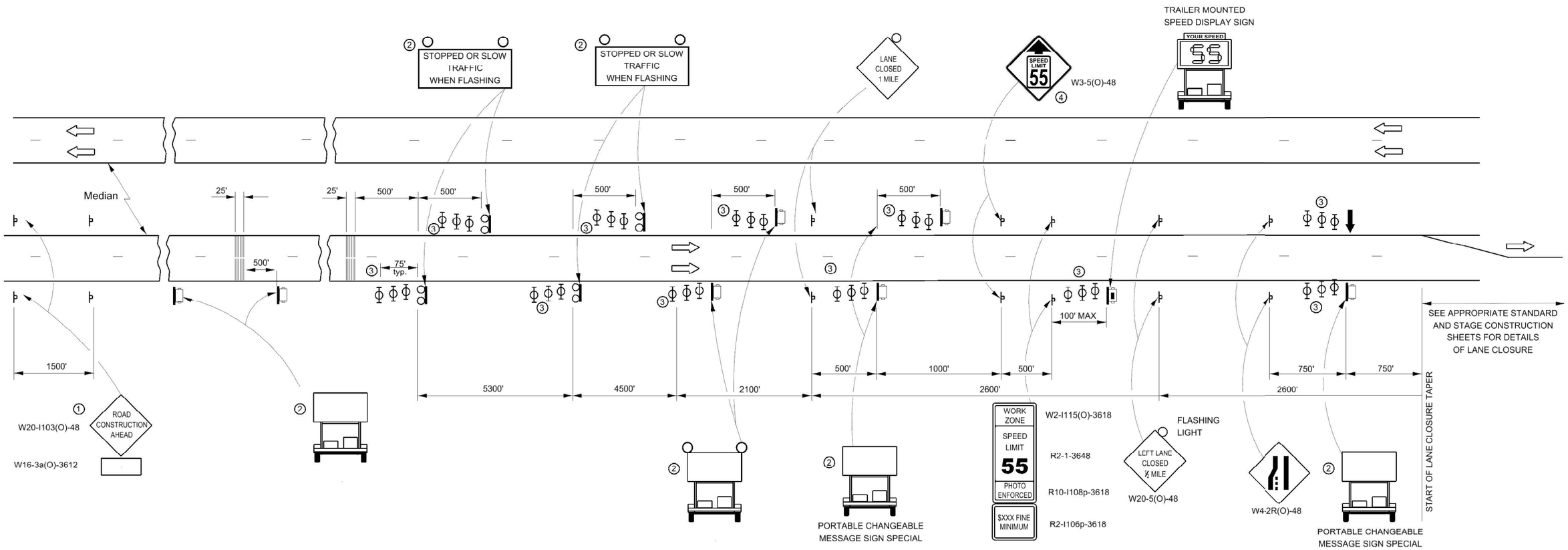

NOTES:

1. THE ROAD CONSTRUCTION AHEAD SIGN SHALL BE LOCATED 5 MILES IN ADVANCE OF THE PROJECT LIMITS.
2. UNIT TO BE PAID FOR SEPARATELY. TO BE PLACED OUTSIDE OF EXISTING PAVED SHOULDER. ANY REQUIRED EARTHWORK INCLUDED IN THE COST OF THE UNIT.
3. THREE, TYPE II BARRICADES, DRUMS, OR VERTICAL BARRICADES AT 25' CENTERS.
4. THIS SIGN SHALL ONLY BE USED IF THE EXISTING SPEED LIMIT IS GREATHER THAN 65 MPH.
5. WHEN SHOWN, PORTABLE CHANGEABLE MESSAGE SIGN SPECIAL SHALL HAVE EQUIVALENT FLASHING BEACONS AS REAL TIME TRAFFIC CONTROL SIGNING. COST INCLUDED IN PORTABLE CHANGEABLE MESSAGE SIGN SPECIAL.

LEGEND:

- ARROW BOARD
- PORTABLE CHANGEABLE MESSAGE SIGN SPECIAL (PCMS)
- SIGN
- REAL-TIME TRAFFIC CONTROL SIGNING
- TYPE II BARRICADE, DRUM, OR VERTICAL BARRICADE WITH MONODIRECTIONAL FLASHING LIGHT.
- SPEED DISPLAY TRAILER

GENERAL NOTE:

THIS STANDARD IS USED WHERE A LANE CLOSURE IS IN PLACE LONGER THAN ONE CONSECUTIVE WEEK OR INCLUDING A WEEKEND OR HOLIDAY AS DESCRIBED IN KEEPING ROADS OPEN TO TRAFFIC.

THE FIRST TWO SIGNS ARE STATIONARY. THE OTHER SIGNS, ARROWBOARDS AND MESSAGE BOARDS SHALL BE MOVED AS NECESSARY TO MAINTAIN THE REQUIRED DISTANCE FROM THE START OF THE LANE CLOSURE TAPER(S).

SEE SPECIAL PROVISIONS FOR SMART TRAFFIC MONITORING SYSTEM, PORTABLE CHANGEABLE MESSAGE SIGN SPECIAL AND CONTROL OF WORK.

THIS DETAIL APPLIES TO APPROACHES TO THE WORK ZONE IN BOTH DIRECTIONS.

WHEN THE RIGHT LANE IS CLOSED, RIGHT LANE CLOSED SIGNS SHALL BE SUBSTITUTED FOR LEFT LANE CLOSED SIGNS.

WHEN EXISTING SIGNS, POLES, AND OTHER ITEMS CONFLICT WITH LOCATING THE EQUIPMENT SHOWN, THE CONTRACTOR SHALL COORDINATE WITH THE ENGINEER TO DECONFLICT EQUIPMENT PLACEMENT.

ALL ORANGE SIGN SHEETING SHALL BE FLOURESCENT ORANGE MATERIAL.

701-12

MODEL: D3 Details-1 [Sheet]
FILE NAME: O:\2022R3\IDOT\CAD CONNECT\22057.13 IDOT D3 PTB 204-028 WO 13 I-57 over Louis Creek Ph II\CADD Data\Sheets\D366M23-sht-districtdetails.dgn

EFK•Moen
Civil Engineering Design

USER NAME = JBerggren	DESIGNED -	REVISED -	
	DRAWN -	REVISED -	
	CHECKED -	REVISED -	
PLOT DATE = 3/18/2025	DATE -	REVISED -	

STATE OF ILLINOIS
DEPARTMENT OF TRANSPORTATION

I-57 OVER LOUIS CREEK
DISTRICT 3 DETAILS

SCALE: | SHEET 2 OF 4 SHEETS | STA. | TO STA.

F.A.I RTE.	SECTION	COUNTY	TOTAL SHEETS	SHEET NO.
57	((38-7B)BR)BR	IROQUOIS	84	72
		CONTRACT NO. 66M23		
		ILLINOIS	FED. AID PROJECT	

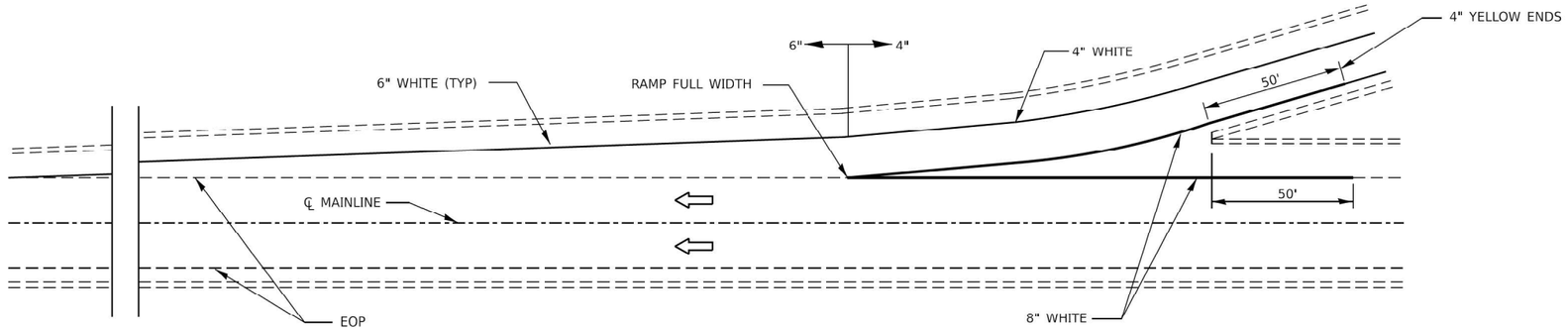

TYPICAL PAVEMENT MARKING FOR ENTRANCE RAMP TERMINALS

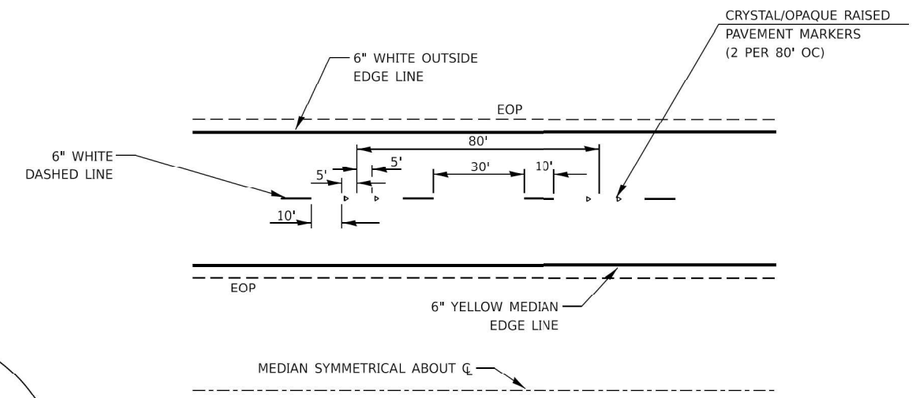

TYPICAL PAVEMENT MARKINGS

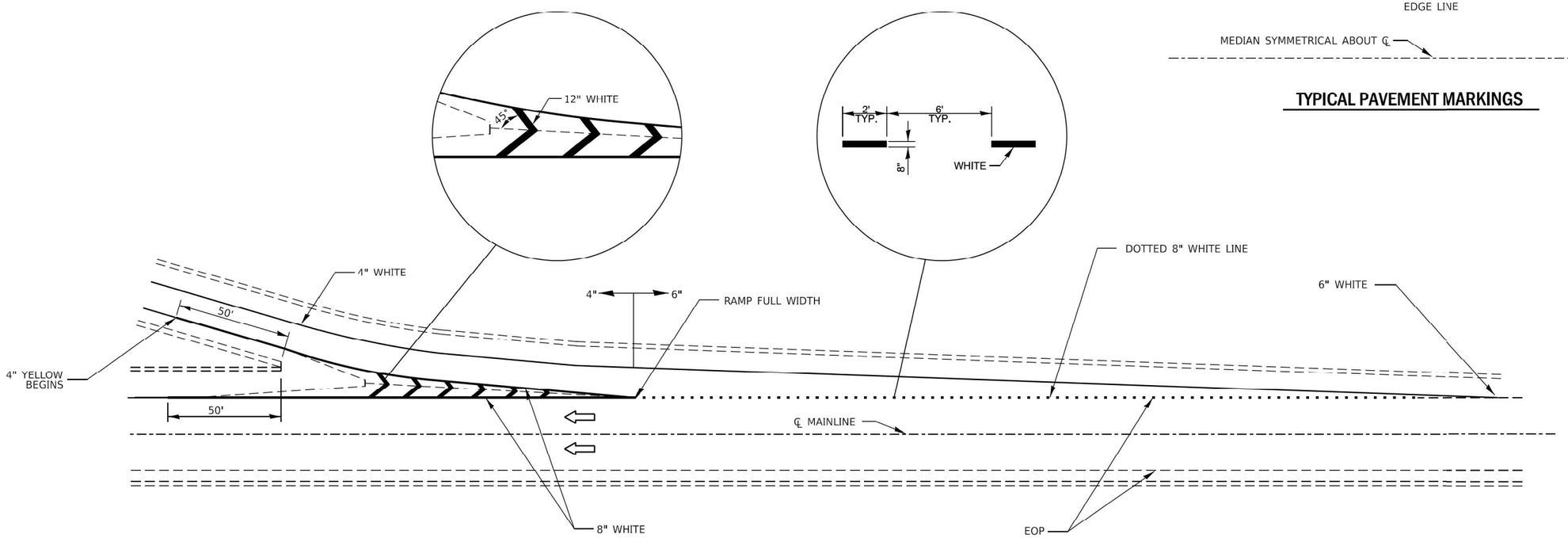

TYPICAL PAVEMENT MARKINGS FOR EXIT RAMP TERMINALS

780-12

MODEL: D3 Details-2 [Sheet]
FILE NAME: O:\2022R3\IDOTCAD CONNECT22057.13 IDOT D3 PTB 204-028 WO 13 I-57 over Louis Creek Ph II\CADD Data\Sheets\D366M23-sht-districtdetails.dgn

EFK•Moen
Civil Engineering Design

USER NAME = JBerggren	DESIGNED -	REVISED -	
	DRAWN -	REVISED -	
	CHECKED -	REVISED -	
PLOT DATE = 3/18/2025	DATE -	REVISED -	

STATE OF ILLINOIS
DEPARTMENT OF TRANSPORTATION

I-57 OVER LOUIS CREEK
DISTRICT 3 DETAILS

SCALE: SHEET 1 OF 4 SHEETS STA. TO STA.

F.A.I RTE.	SECTION	COUNTY	TOTAL SHEETS	SHEET NO.
57	((38-7B)BR)BR	IROQUOIS	84	73
		CONTRACT NO. 66M23		
		ILLINOIS	FED. AID PROJECT	

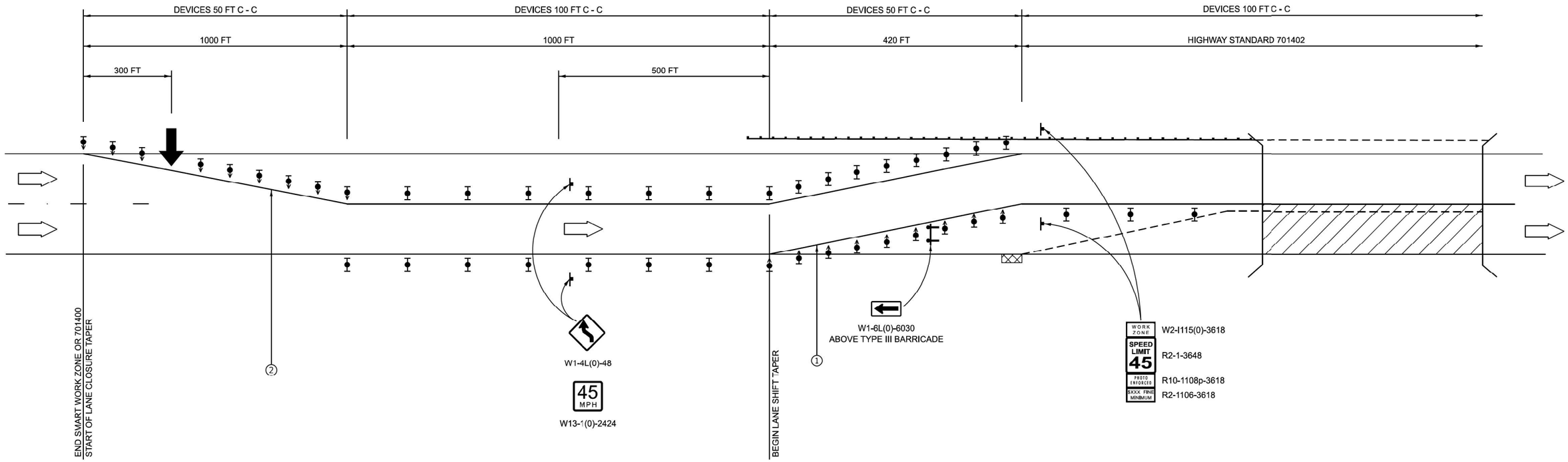

LEGEND

- DIRECTION INDICATOR BARRICADE WITH STEADY BURN MONODIRECTIONAL LIGHT
- TYPE II BARRICADE, DRUM, OR VERTICAL BARRICADE WITH STEADY BURN MONO-DIRECTIONAL LIGHT (LIGHTS REQUIRED AT NIGHT ONLY)
- DIRECTION OF TRAFFIC
- TYPE III BARRICADE WITH FLASHING MONO-DIRECTIONAL LIGHTS. (LIGHTS REQUIRED AT NIGHT ONLY)
- ARROW BOARD
- IMPACT ATTENUATOR
- WORK AREA
- ① TEMPORARY PAVEMENT MARKING TYPE IV TAPE - WHITE
- ② TEMPORARY PAVEMENT MARKING TYPE IV TAPE - YELLOW

NOTES: SEE HIGHWAY STANDARD 701402 FOR DETAILS NOT SHOWN

INTERSTATE SINGLE LANE WEAVE
701402

MODEL: Raster-3 [Sheet]
FILE NAME: O:\2022R3\DOTCAD CONNECT\22057.13 IDOT D3 PTB 204-028 WO 13 I-57 over Louis Creek Ph II\CADD Data\Sheets\D366V23-sht-districtdetails.dgn

EFK•Moen
Civil Engineering Design

USER NAME = JBerggren	DESIGNED -	REVISED -
	DRAWN -	REVISED -
	CHECKED -	REVISED -
PLOT DATE = 3/18/2025	DATE -	REVISED -

STATE OF ILLINOIS
DEPARTMENT OF TRANSPORTATION

I-57 OVER LOUIS CREEK
DISTRICT 3 DETAILS

SCALE: | SHEET A004 OF 4 SHEETS | STA. | TO STA.

F.A.I RTE.	SECTION	COUNTY	TOTAL SHEETS	SHEET NO.
57	((38-7B)BR)BR	IROQUOIS	84	74

CONTRACT NO. 66M23

ILLINOIS | FED. AID PROJECT

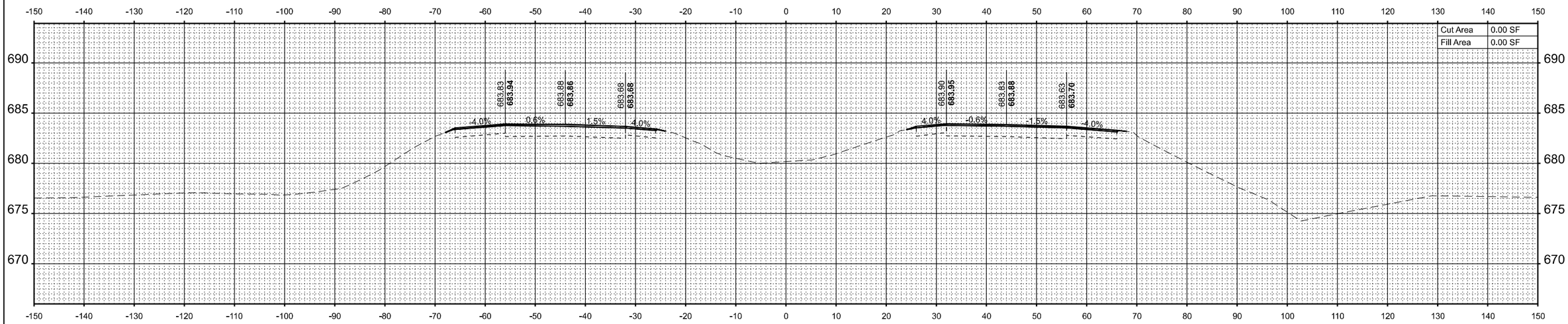

STA 1181+00.00

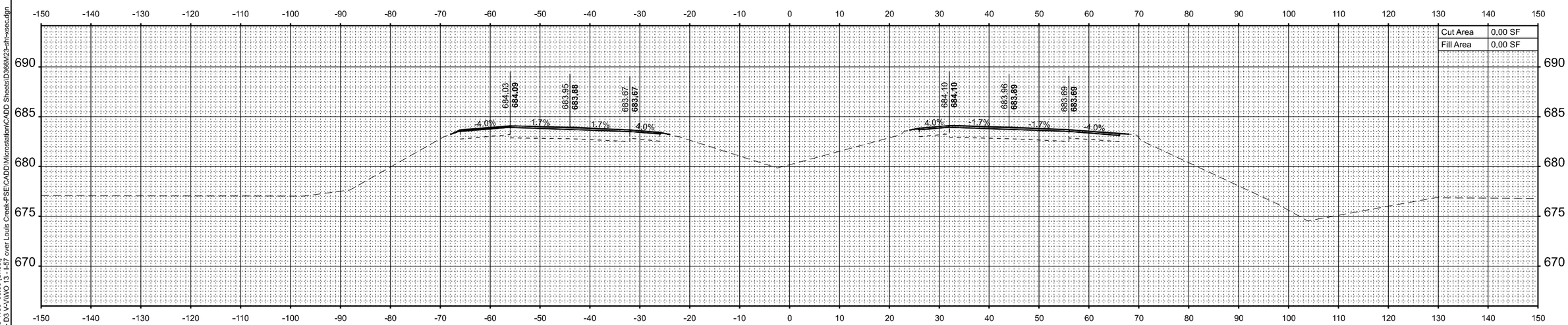

STA 1180+50.00

MODEL: Cross Sections - C 1180+50.00 [Sheet]
FILE NAME: H:\P222101 - D3 V-A\WO 13 - I-57 over Louis Creek-PSE\CADD\Microstation\CADD Sheets\D356M23-sht-xsec.dgn

OATES ASSOCIATES
www.oatesassociates.com
ILLINOIS DESIGN FIRM LICENSE NO.: 184.001115

USER NAME = breanna.frahm	DESIGNED -	REVISED -	
	DRAWN -	REVISED -	
	CHECKED -	REVISED -	
PLOT DATE = 3/19/2025	DATE -	REVISED -	

STATE OF ILLINOIS
DEPARTMENT OF TRANSPORTATION

CROSS SECTIONS

SCALE: 1"=10' | SHEET 1 OF 10 SHEETS | STA. | TO STA.

F.A.I. RTE.	SECTION	COUNTY	TOTAL SHEETS	SHEET NO.
57	((38-7B)BR)BR	IROQUOIS	84	75

CONTRACT NO. 66M23

ILLINOIS | FED. AID PROJECT

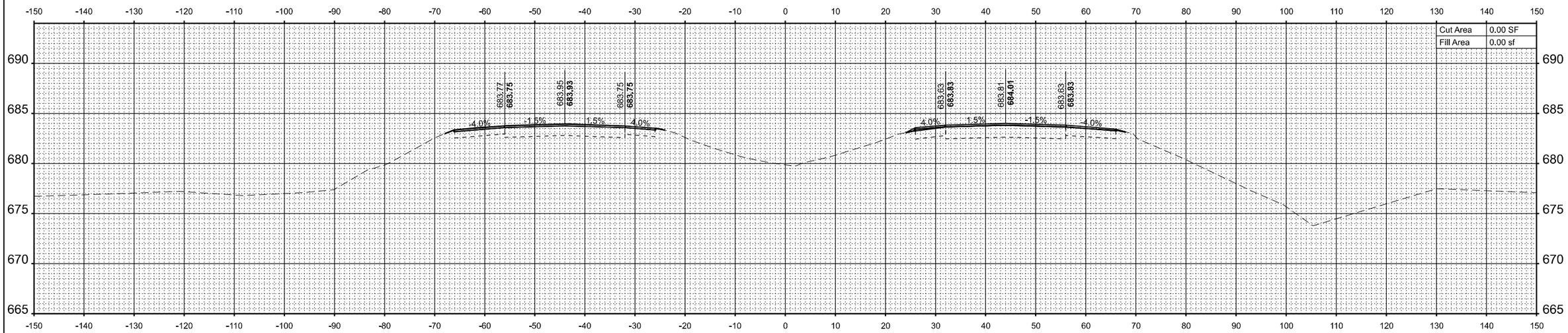

STA 1182+00.00

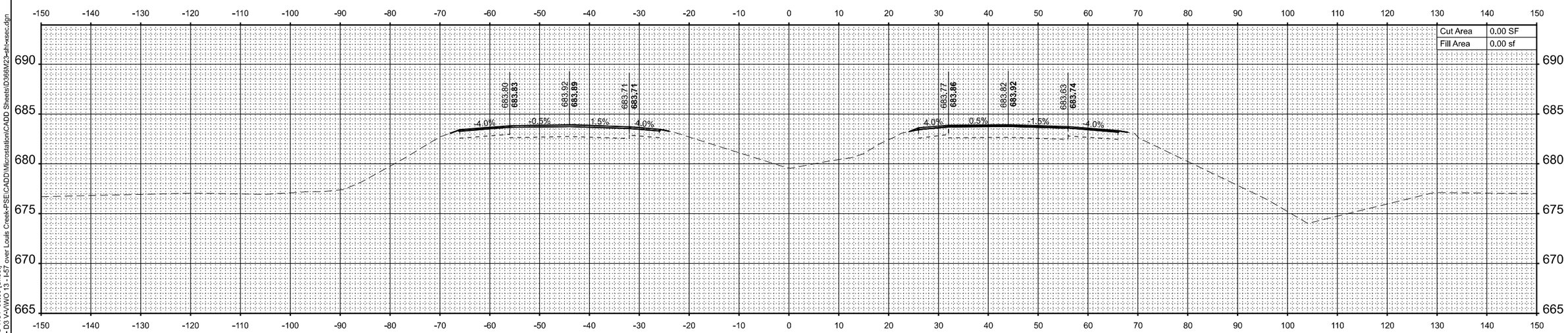

STA 1181+50.00

MODEL: Cross Sections - C 1181+50.00 [Sheet]
FILE NAME: H:\P222101 - D3 VA\WO 13 - I-57 over Louis Creek-PSE\CADD\Microstation\CADD Sheets\D366M23-sh-xsec.dgn

OATES ASSOCIATES
www.oatesassociates.com
ILLINOIS DESIGN FIRM LICENSE NO.: 184.001115

USER NAME = breanna.frahm	DESIGNED -	REVISED -	
	DRAWN -	REVISED -	
	CHECKED -	REVISED -	
PLOT DATE = 3/20/2025	DATE -	REVISED -	

STATE OF ILLINOIS
DEPARTMENT OF TRANSPORTATION

CROSS SECTIONS

SCALE: 1"=10' | SHEET 2 OF 10 SHEETS | STA. TO STA.

F.A.I. RTE.	SECTION	COUNTY	TOTAL SHEETS	SHEET NO.
57	((38-7B)BR)BR	IROQUOIS	84	76
		CONTRACT NO. 66M23		
		ILLINOIS	FED. AID PROJECT	

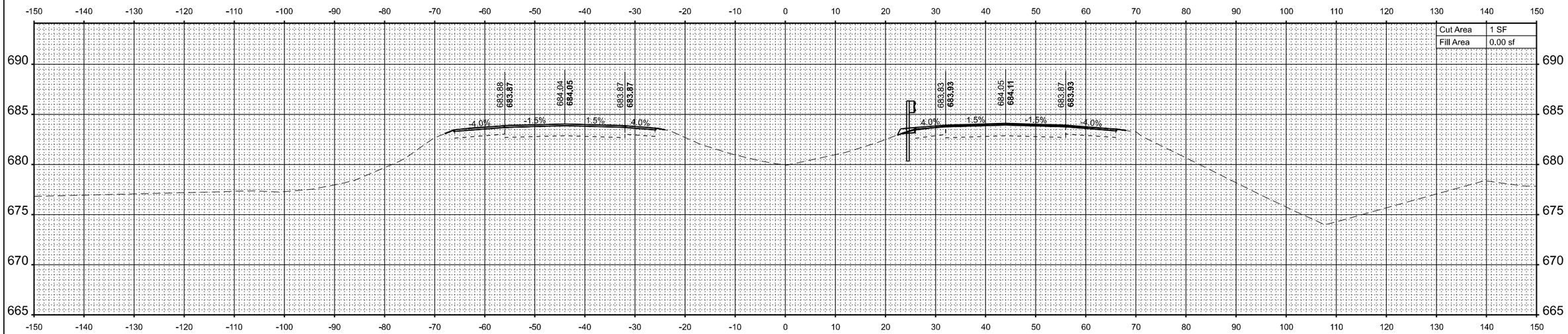

STA 1183+00.00

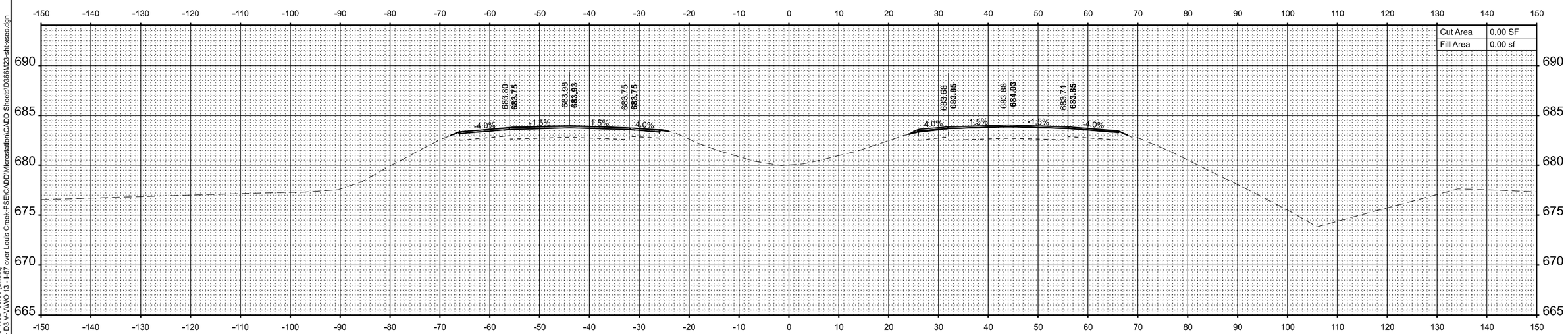

STA 1182+50.00

MODEL: Cross Sections - C 1182+50.00 [Sheet]
FILE NAME: H:\P222101 - D3 VA\WO 13 - I-57 over Louis Creek-PSE\CADD\Microstation\CADD Sheets\D368M23-sht-sec.dgn

OATES ASSOCIATES
www.oatesassociates.com
ILLINOIS DESIGN FIRM LICENSE NO.: 184.001115

USER NAME = breanna.frahm	DESIGNED -	REVISED -
	DRAWN -	REVISED -
	CHECKED -	REVISED -
PLOT DATE = 3/20/2025	DATE -	REVISED -

STATE OF ILLINOIS
DEPARTMENT OF TRANSPORTATION

CROSS SECTIONS

SCALE: 1"=10' | SHEET 3 OF 10 SHEETS | STA. | TO STA.

F.A.I. RTE.	SECTION	COUNTY	TOTAL SHEETS	SHEET NO.
57	((38-7B)BR)BR	IROQUOIS	84	77

CONTRACT NO. 66M23

ILLINOIS | FED. AID PROJECT

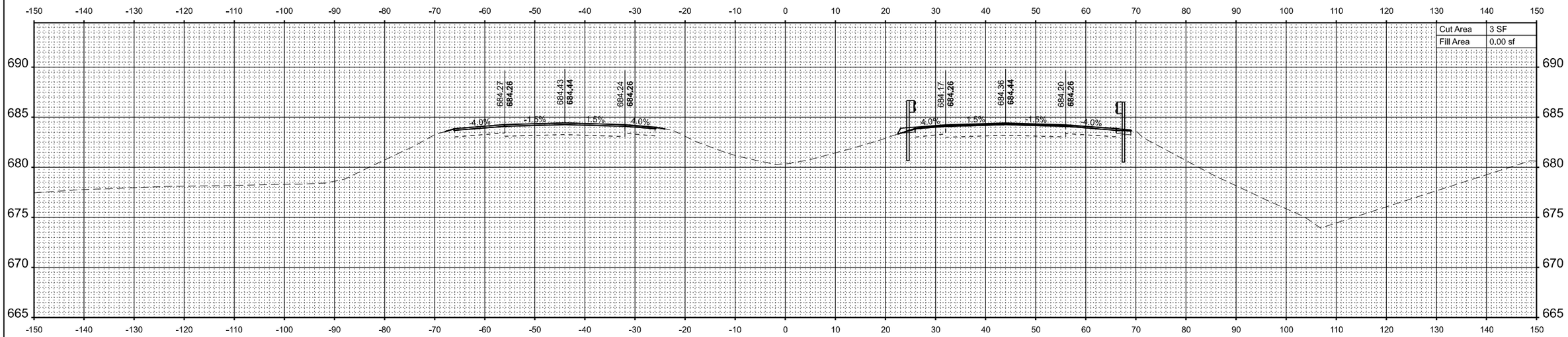

STA 1184+00.00

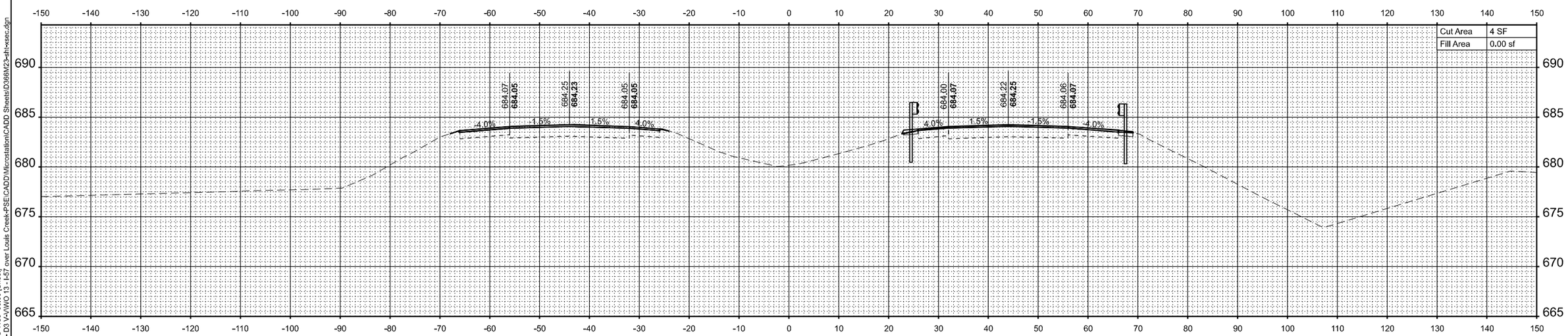

STA 1183+50.00

MODEL: Cross Sections - C 1183+50.00 [Sheet]
FILE NAME: H:\P222101 - D3 VA\WO 13 - I-57 over Louis Creek\PSE\CADD\Microstation\CADD Sheets\D366M23-sht-sec.dgn

OATES ASSOCIATES
www.oatesassociates.com
ILLINOIS DESIGN FIRM LICENSE NO.: 184.001115

USER NAME = breanna.frahm	DESIGNED -	REVISED -
	DRAWN -	REVISED -
	CHECKED -	REVISED -
PLOT DATE = 3/20/2025	DATE -	REVISED -

STATE OF ILLINOIS
DEPARTMENT OF TRANSPORTATION

CROSS SECTIONS

SCALE: 1"=10' | SHEET 4 OF 10 SHEETS | STA. | TO STA.

F.A.I. RTE.	SECTION	COUNTY	TOTAL SHEETS	SHEET NO.
57	((38-7B)BR)BR	IROQUOIS	84	78

CONTRACT NO. 66M23

ILLINOIS | FED. AID PROJECT

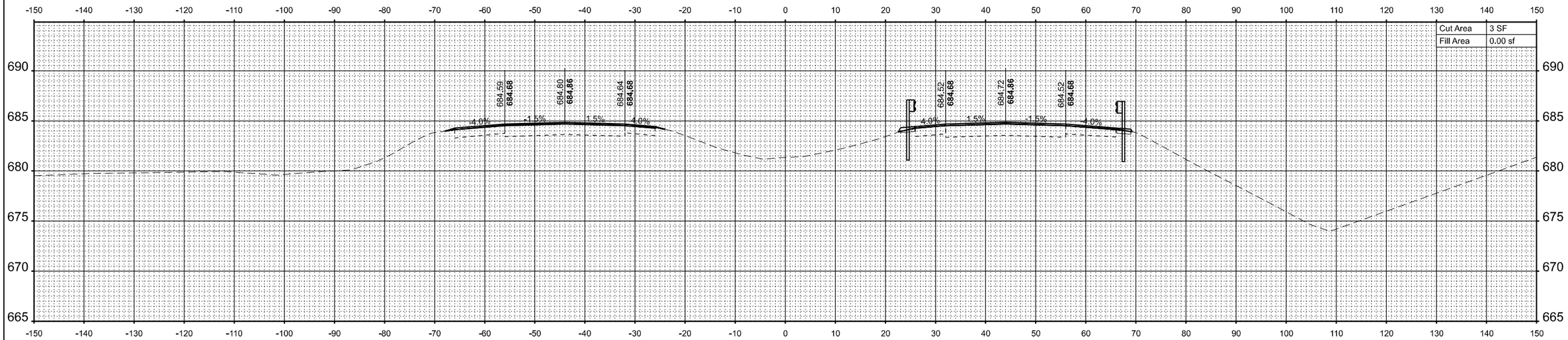

STA 1185+00.00

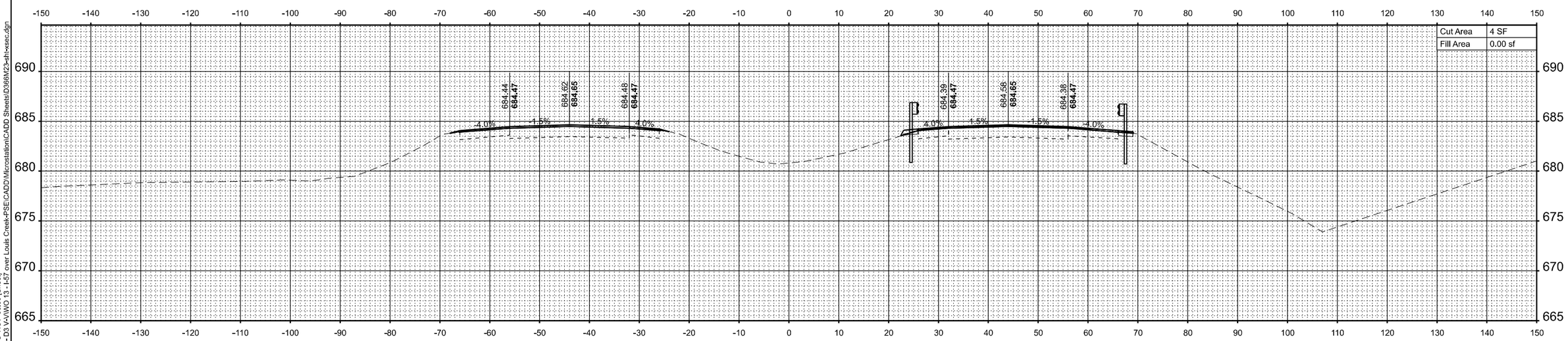

STA 1184+50.00

MODEL: Cross Sections - C 1184+50.00 [Sheet]
FILE NAME: H:\P222101 - D3 V-VWO 13 - I-57 over Louis Creek-PSE\CADD\Microstation\CADD Sheets\D386W23-sht-xsec.dgn

OATES ASSOCIATES
www.oatesassociates.com
ILLINOIS DESIGN FIRM LICENSE NO.: 184.001115

USER NAME = breanna.frahm	DESIGNED -	REVISED -
	DRAWN -	REVISED -
	CHECKED -	REVISED -
PLOT DATE = 3/20/2025	DATE -	REVISED -

STATE OF ILLINOIS
DEPARTMENT OF TRANSPORTATION

CROSS SECTIONS

SCALE: 1"=10' | SHEET 5 OF 10 SHEETS | STA. | TO STA.

F.A.I. RTE.	SECTION	COUNTY	TOTAL SHEETS	SHEET NO.
57	((38-7B)BR)BR	IROQUOIS	84	79
		CONTRACT NO. 66M23		
		ILLINOIS FED. AID PROJECT		

BRIDGE OMISSION

STA 1186+01.32 TO STA 1187+95.85

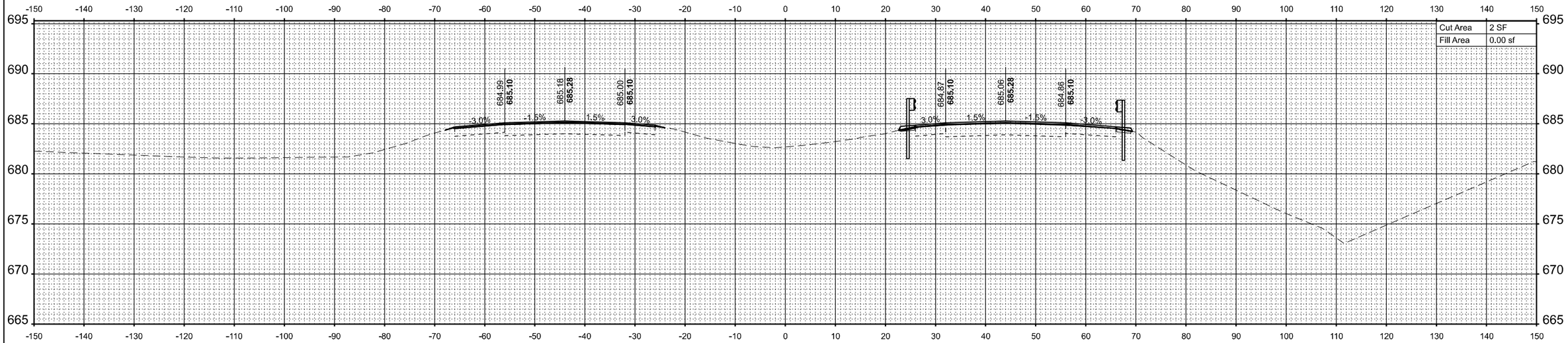

STA 1186+00.00

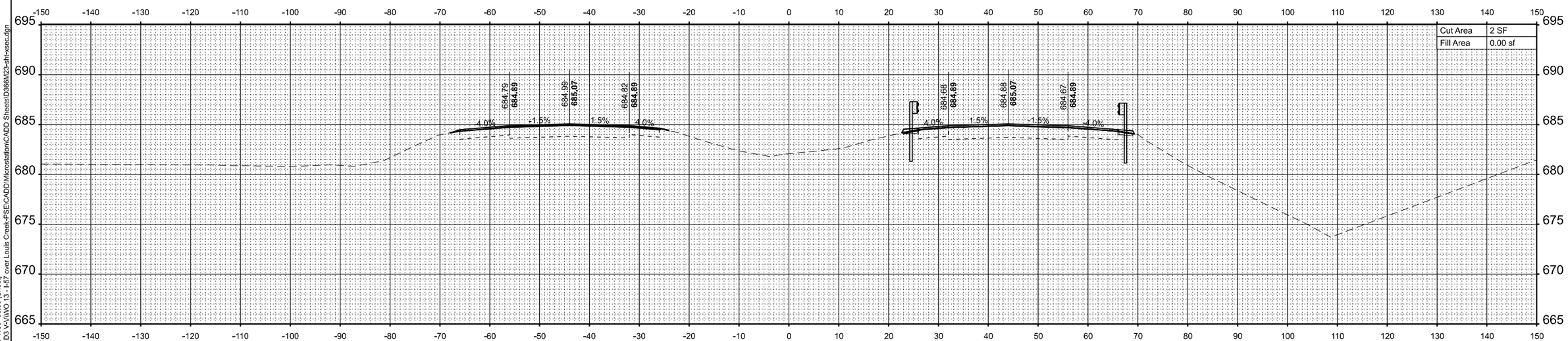

STA 1185+50.00

MODEL: Cross Sections - C 1185+50.00 [Sheet]
FILE NAME: H:\P\222101 - D3 VA\WO 13 - I-57 over Louis Creek-PSE\CADD\Microstation\CADD Sheets\D368M23-sht-ser.dgn

OATES ASSOCIATES
www.oatesassociates.com
ILLINOIS DESIGN FIRM LICENSE NO.: 184.001115

USER NAME = breanna.frahm	DESIGNED -	REVISED -	
	DRAWN -	REVISED -	
	CHECKED -	REVISED -	
PLOT DATE = 3/20/2025	DATE -	REVISED -	

STATE OF ILLINOIS
DEPARTMENT OF TRANSPORTATION

CROSS SECTIONS

SCALE: 1"=10' | SHEET 6 OF 10 SHEETS | STA. | TO STA.

F.A.I. RTE.	SECTION	COUNTY	TOTAL SHEETS	SHEET NO.
57	((38-7B)BR)BR	IROQUOIS	84	80
		CONTRACT NO. 66M23		
	ILLINOIS	FED. AID PROJECT		

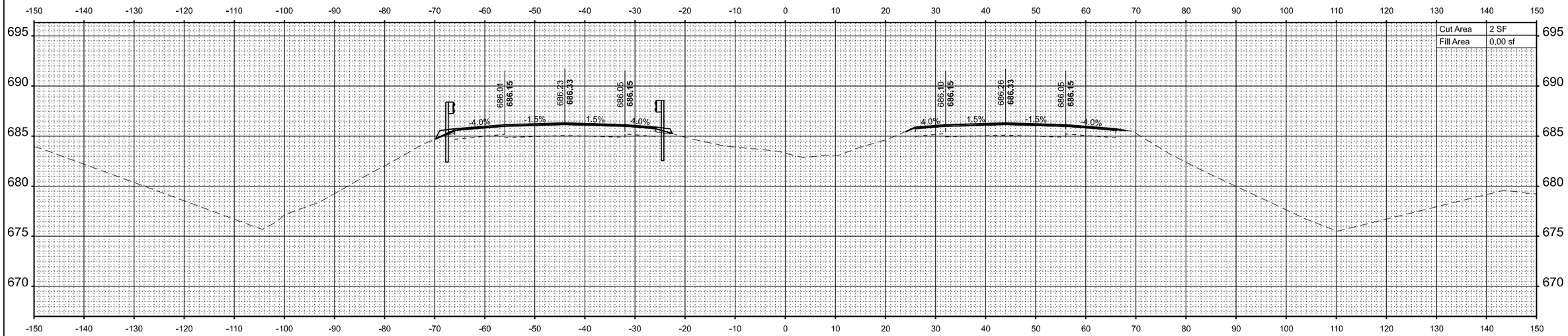

STA 1188+50.00

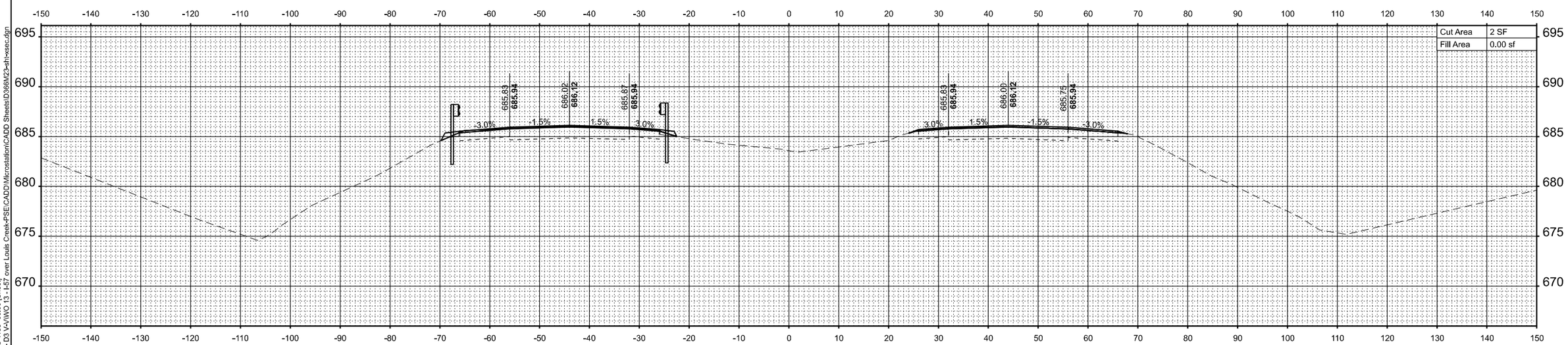

STA 1188+00.00

MODEL: Cross Sections - C 1188+00.00 [Sheet]
FILE NAME: H:\P222101 - D3 VA\WO 13 - I-57 over Louis Creek-PSE\CADD\Microstation\CADD Sheets\D368M23-sht-xsec.dgn

OATES ASSOCIATES
www.oatesassociates.com
ILLINOIS DESIGN FIRM LICENSE NO.: 184.001115

USER NAME = breanna.frahm	DESIGNED -	REVISED -	
	DRAWN -	REVISED -	
	CHECKED -	REVISED -	
PLOT DATE = 3/20/2025	DATE -	REVISED -	

STATE OF ILLINOIS
DEPARTMENT OF TRANSPORTATION

CROSS SECTIONS

SCALE: 1"=10' | SHEET 7 OF 10 SHEETS | STA. | TO STA.

F.A.I. RTE.	SECTION	COUNTY	TOTAL SHEETS	SHEET NO.
57	((38-7B)BR)BR	IROQUOIS	84	81
		CONTRACT NO. 66M23		
	ILLINOIS	FED. AID PROJECT		

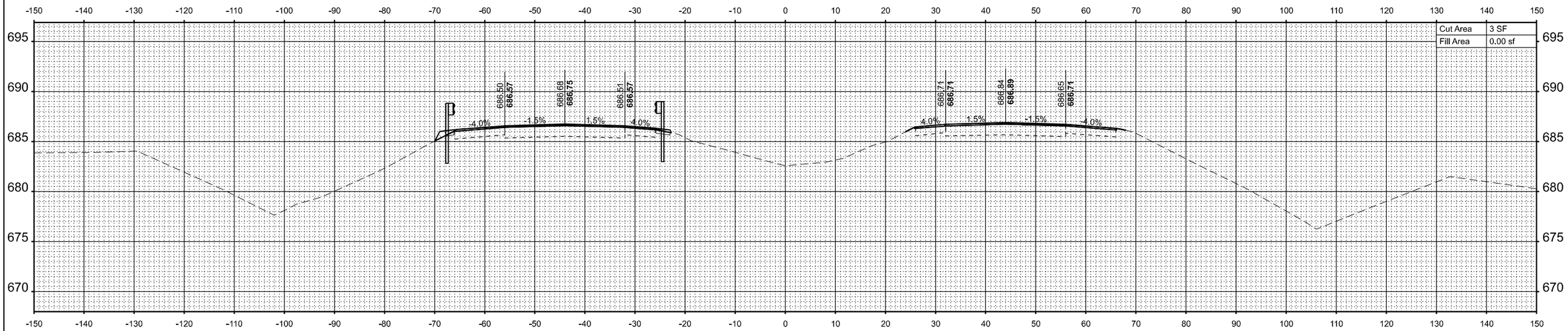

STA 1189+50.00

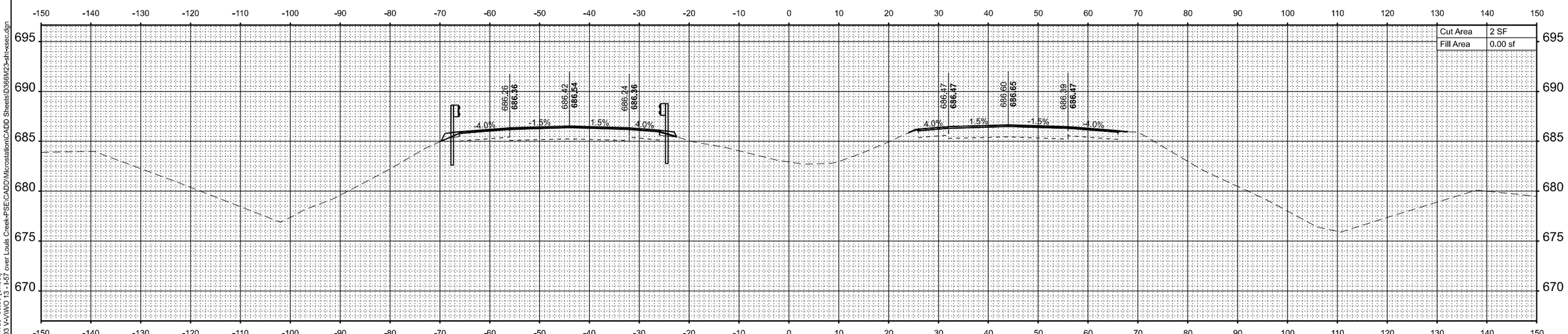

STA 1189+00.00

MODEL: Cross Sections - C 1189+00.00 [Sheet]
FILE NAME: H:\P222101 - D3 VA\WO 13 - I-57 over Louis Creek-PSE\CADD\Microstation\CADD Sheets\D366M23-sht-xsec.dgn

OATES ASSOCIATES
www.oatesassociates.com
ILLINOIS DESIGN FIRM LICENSE NO.: 184.001115

USER NAME = breanna.frahm	DESIGNED -	REVISED -	
	DRAWN -	REVISED -	
	CHECKED -	REVISED -	
PLOT DATE = 3/20/2025	DATE -	REVISED -	

STATE OF ILLINOIS
DEPARTMENT OF TRANSPORTATION

CROSS SECTIONS

SCALE: 1"=10' | SHEET 8 OF 10 SHEETS | STA. | TO STA.

F.A.I. RTE.	SECTION	COUNTY	TOTAL SHEETS	SHEET NO.
57	((38-7B)BR)BR	IROQUOIS	84	82
		CONTRACT NO. 66M23		
		ILLINOIS FED. AID PROJECT		

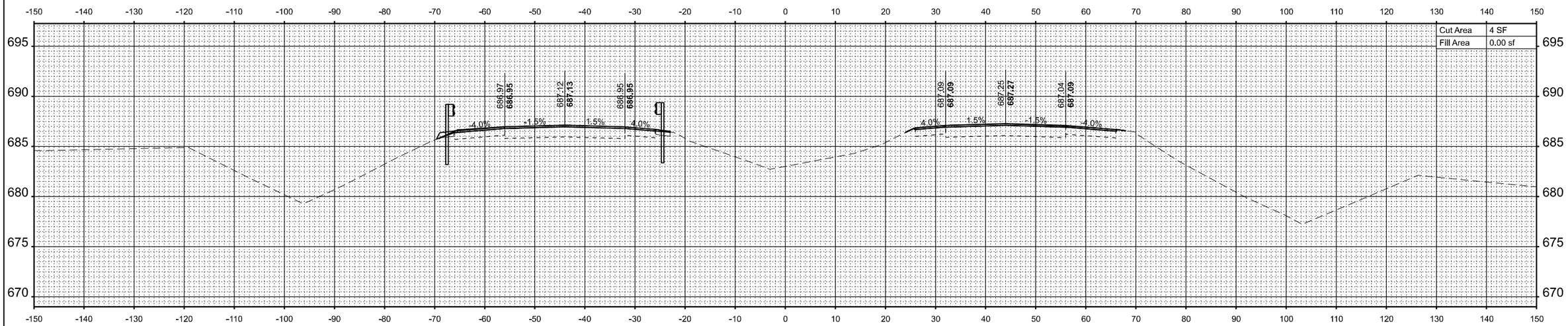

STA 1190+50.00

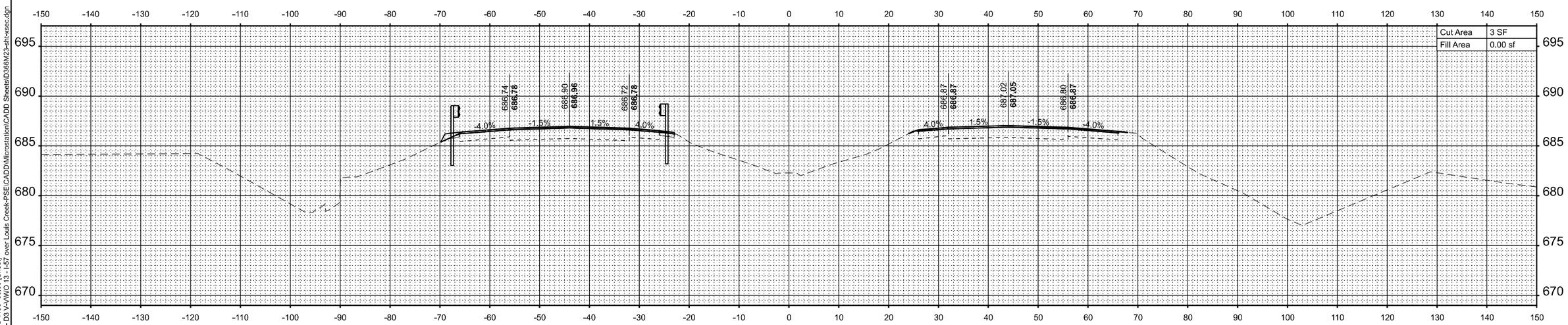

STA 1190+00.00

MODEL: Cross Sections - C 1190+00.00 [Sheet]
FILE NAME: H:\P222101 - D3 VA\WO 13 - I-57 over Louis Creek-PSE\CADD\Microstation\CADD Sheets\D386M23-sht-xsec.dgn

OATES ASSOCIATES
www.oatesassociates.com
ILLINOIS DESIGN FIRM LICENSE NO.: 184.001115

USER NAME = breanna.frahm	DESIGNED -	REVISED -	
	DRAWN -	REVISED -	
	CHECKED -	REVISED -	
PLOT DATE = 3/20/2025	DATE -	REVISED -	

STATE OF ILLINOIS
DEPARTMENT OF TRANSPORTATION

CROSS SECTIONS

SCALE: 1"=10' | SHEET 9 OF 10 SHEETS | STA. | TO STA.

F.A.I. RTE.	SECTION	COUNTY	TOTAL SHEETS	SHEET NO.
57	((38-7B)BR)BR	IROQUOIS	84	83
		CONTRACT NO. 66M23		
		ILLINOIS	FED. AID PROJECT	

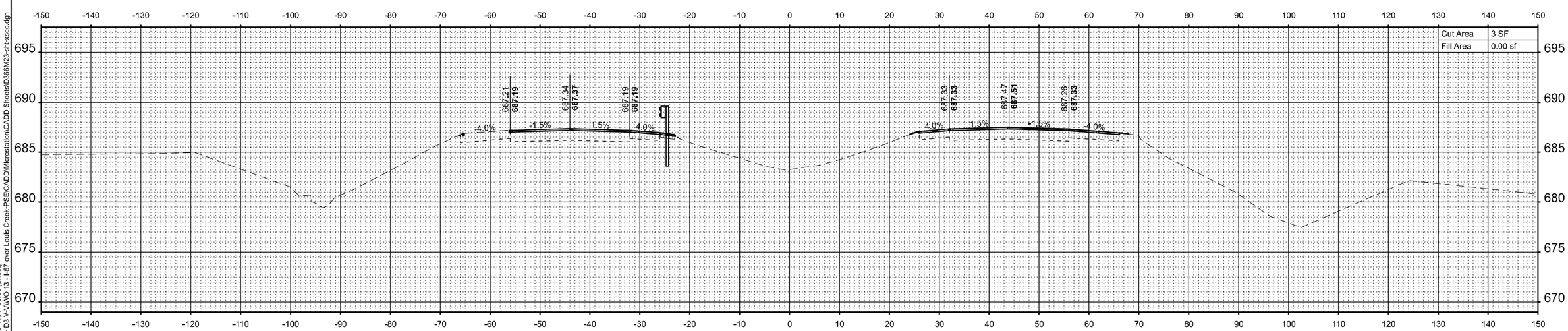

STA 1191+00.00

MODEL: Cross Sections - C 1191+00.00 [Sheet]
FILE NAME: H:\P222101 - D3 VA\WO 13 - I-57 over Louis Creek-PSE\CADD\Microstation\CADD Sheets\D368M23-sht-sec.dgn

OATES ASSOCIATES
www.oatesassociates.com
ILLINOIS DESIGN FIRM LICENSE NO.: 184.001115

USER NAME = breanna.frahm	DESIGNED -	REVISED -
	DRAWN -	REVISED -
	CHECKED -	REVISED -
PLOT DATE = 3/20/2025	DATE -	REVISED -

STATE OF ILLINOIS
DEPARTMENT OF TRANSPORTATION

CROSS SECTIONS

SCALE: 1"=10' | SHEET 10 OF 10 SHEETS | STA. | TO STA.

F.A.I. RTE.	SECTION	COUNTY	TOTAL SHEETS	SHEET NO.
57	((38-7B)BR)BR	IROQUOIS	84	84
		CONTRACT NO. 66M23		
		ILLINOIS	FED. AID PROJECT	