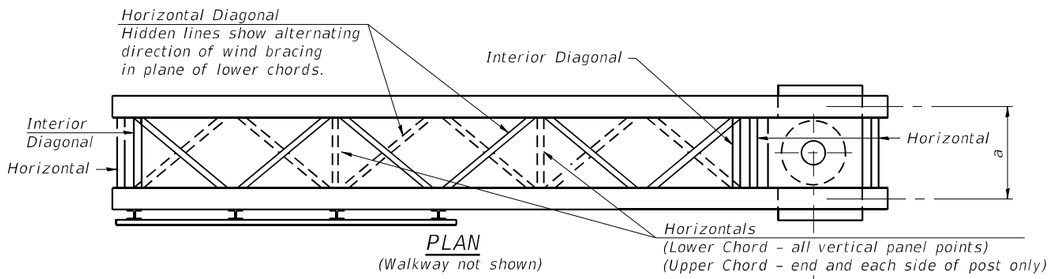

PLAN
(Walkway not shown)

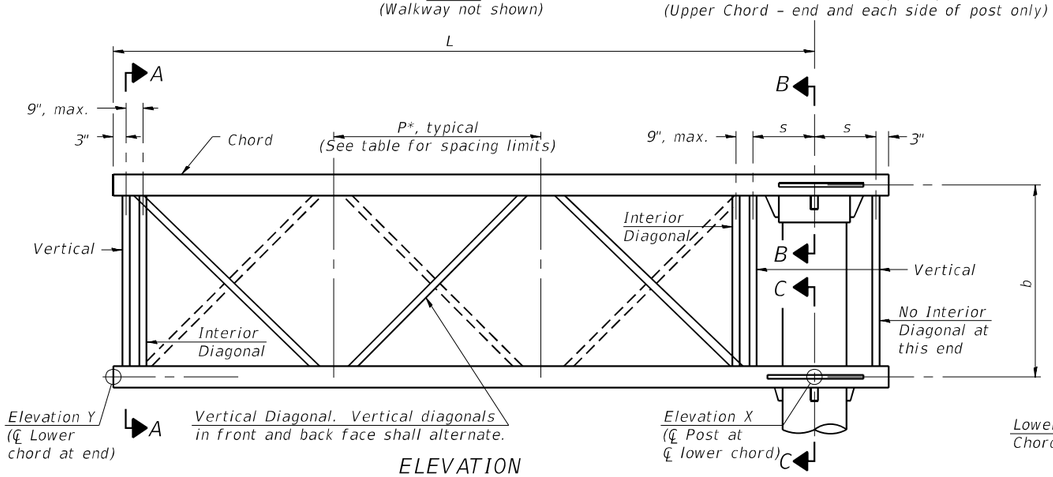

ELEVATION
(Sign and walkway omitted for clarity)

TYPICAL TRUSS UNIT

For Section B-B and Section C-C, see Base Sheet OSC-A-3.

Note:
There are twice as many horizontal diagonals as there are vertical diagonals.

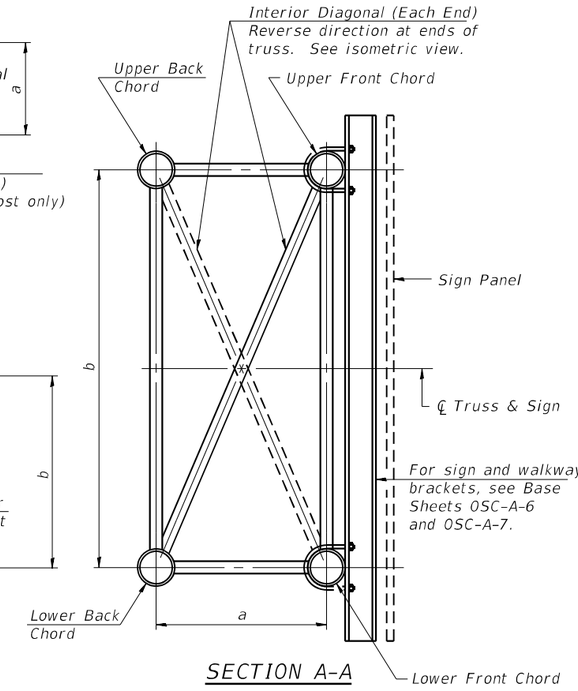

SECTION A-A

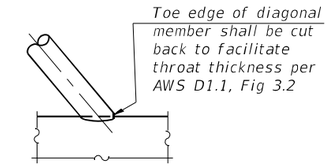

DETAIL A

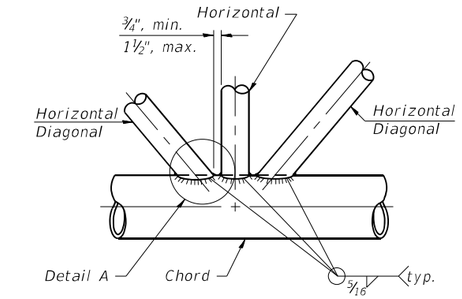

TRUSS INTERIOR JOINT DETAIL

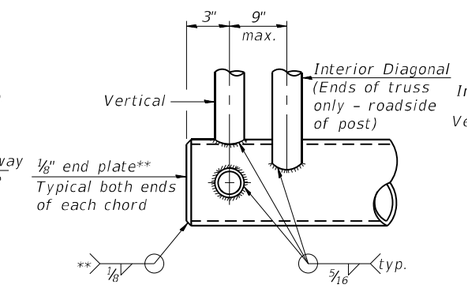

CANTILEVER END JOINT DETAIL

** Contractor may alternatively use standard aluminum drive-fit cap to close ends. ½" Ø Drain hole in end plate / drive-fit cap.

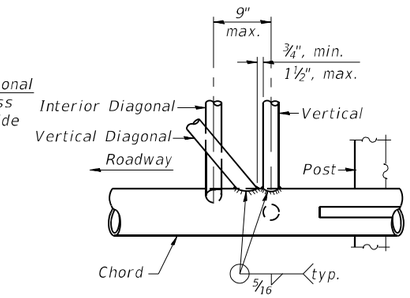

POST END JOINT DETAIL

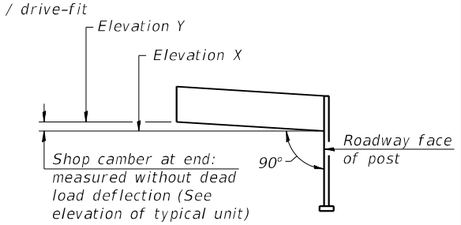

CAMBER DIAGRAM
(For Fabrication Only)

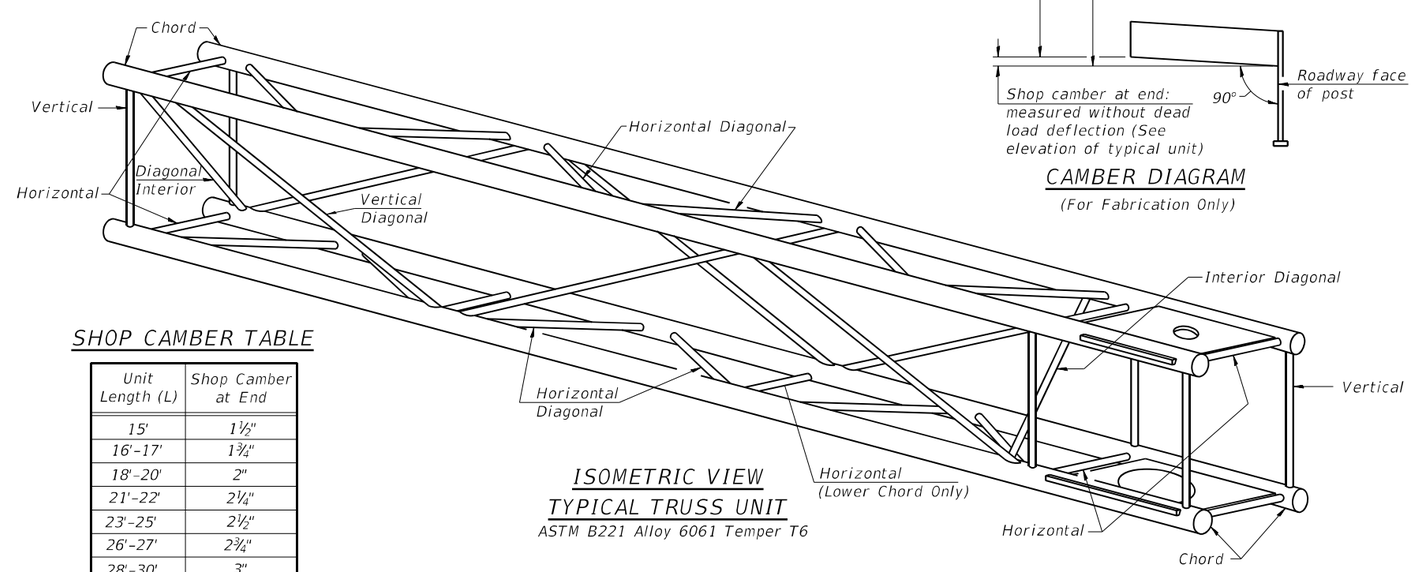

ISOMETRIC VIEW
TYPICAL TRUSS UNIT
ASTM B221 Alloy 6061 Temper T6

TRUSS UNIT TABLE

Truss Type	Dimension "a"	Dimension "b"	Dimension "s"	Limits for Panel Spacing (P)*	Up. & Low. Chord		Verticals; Horizontals; Vertical, Horizontal, and Interior Diagonals	
					O.D.	Wall	O.D.	Wall
I-C-A	24"	54"	16"	36" min. to 48" max.	5"	5/16"	2½"	5/16"
II-C-A	36"	66"	21"	42" min. to 54" max.	6½"	5/16"	3¼"	5/16"
III-C-A (35' Max.)	36"	84"	21"	48" min. to 66" max.	7"	⅜"	3½"	⅜"
III-C-A (>35' to 40')	36"	84"	21"	48" min. to 66" max.	8"	⅜"	3½"	⅜"

$$*P = \frac{L-s-3''}{\#\ Panels}$$

Structure Number	Station	Truss Type	Design Length (L)	Number of Panels Per Unit	Panel Length (P)*
4C090U024L000.46	249+42.00	II-C-A	27'-6"	6	4'-3"

SHOP CAMBER TABLE

Unit Length (L)	Shop Camber at End
15'	1½"
16'-17'	1¾"
18'-20'	2"
21'-22'	2¼"
23'-25'	2½"
26'-27'	2¾"
28'-30'	3"
31'-32'	3¼"
33'-35'	3½"
36'-37'	4"
38'-40'	4½"

OSC-A-2 5-15-2023

MODEL: Default
FILE NAME: P:\4312-WBI\cC1\ugageRehab\CADD\Structural_Roadway (MM)\D468E44-sht-SignCnt2.dgn
1/20/2025 7:34:44 AM

MODJESKI and MASTERS

USER NAME = AECook	DESIGNED -	REVISED -	
	DRAWN -	REVISED -	
PLOT SCALE = 0:2.0000 ':" / in.	CHECKED -	REVISED -	
PLOT DATE = 1/20/2025	DATE - 1/20/2025	REVISED -	

STATE OF ILLINOIS
DEPARTMENT OF TRANSPORTATION

CANTILEVER SIGN STRUCTURES - TRUSS DETAILS
ALUMINUM TRUSS & STEEL POST

SCALE: N.T.S. | SHEET 2 OF 8 SHEETS | STA. | TO STA.

F.A.P RTE.	SECTION	COUNTY	TOTAL SHEETS	SHEET NO.
317	(15B-1)BP,BRR; (14HB-1)BRR	PEO/TAZ	418	101
		CONTRACT NO. 68E44		
	ILLINOIS	FED. AID PROJECT		

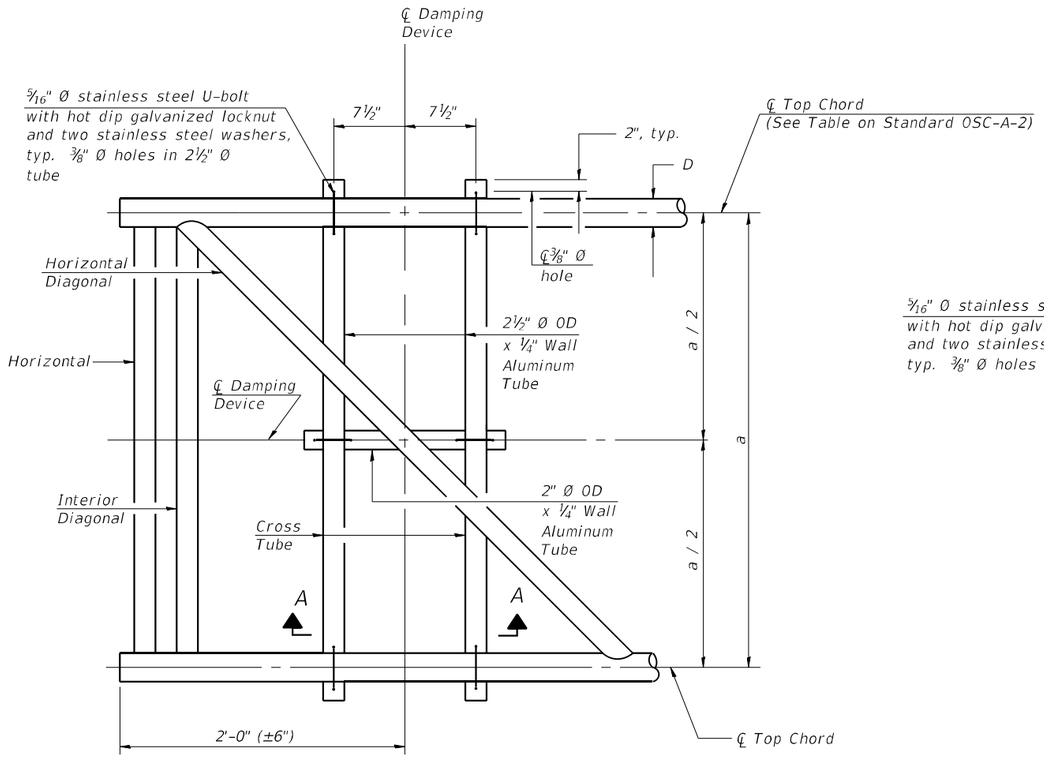

PLAN DETAIL

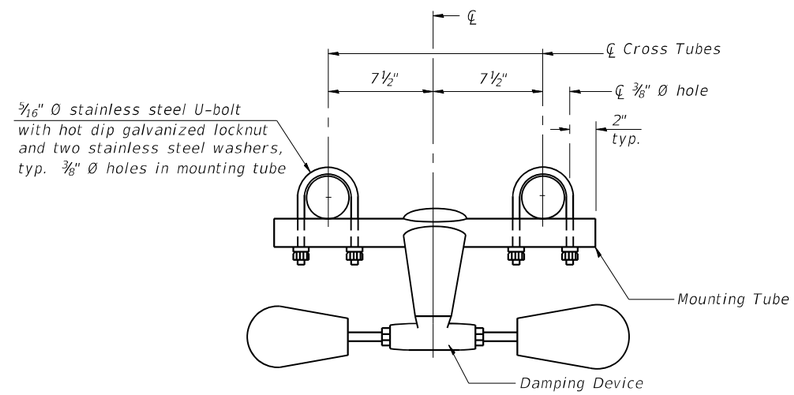

TRUSS DAMPING DEVICE CONNECTION DETAIL

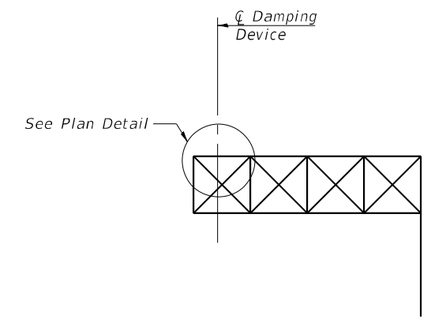

ELEVATION

Aluminum Cantilever Sign Structure

GENERAL NOTES

Damper: One damper per truss. (31 lbs. Stockbridge-Type Aluminum-29" minimum between ends of weights)

Materials: Aluminum tubes shall be ASTM B221 alloy 6061 temper T6

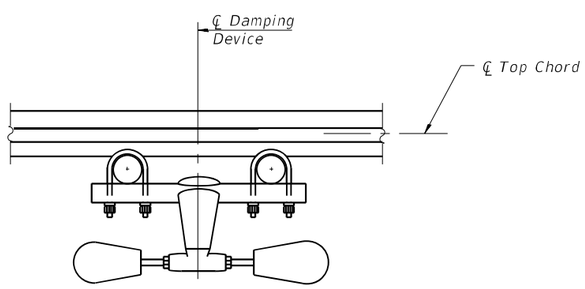

SECTION A-A

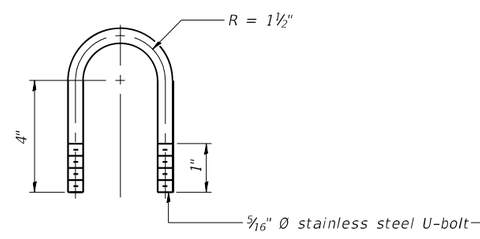

DAMPING DEVICE MOUNTING TUBE U-BOLT DETAIL

(Typical)

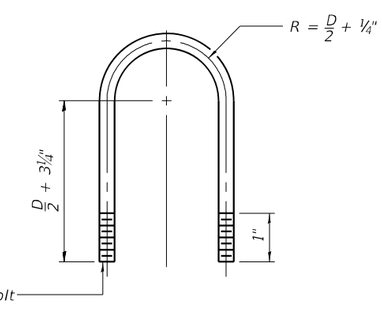

TOP CHORD TO CROSS TUBE U-BOLT DETAIL

(Typical)

OSC-A-D 5-15-2023

MODEL: Default
FILE NAME: P:\4312-VBR\C1LuggeRehab\CADD\Structural_Roadway (MM)\D468E44-sht-SignCnt3.dgn

MODJESKI-MASTERS	USER NAME = AECook	DESIGNED -	REVISED -	STATE OF ILLINOIS DEPARTMENT OF TRANSPORTATION	CANTILEVER SIGN STRUCTURE DAMPING DEVICE	F.A.P RTE.	SECTION	COUNTY	TOTAL SHEETS / SHEET NO.
		DRAWN -	REVISED -			317	(15B-1)BP,BRR; (14HB-1)BRR	PEO/TAZ	418 / 102
	PLOT SCALE = 0:2.0000 ':" / in.	CHECKED -	REVISED -					CONTRACT NO. 68E44	
	PLOT DATE = 1/20/2025	DATE - 1/20/2025	REVISED -		SCALE: N.T.S. SHEET 3 OF 8 SHEETS STA. TO STA.		ILLINOIS	FED. AID PROJECT	

1/20/2025 7:34:50 AM

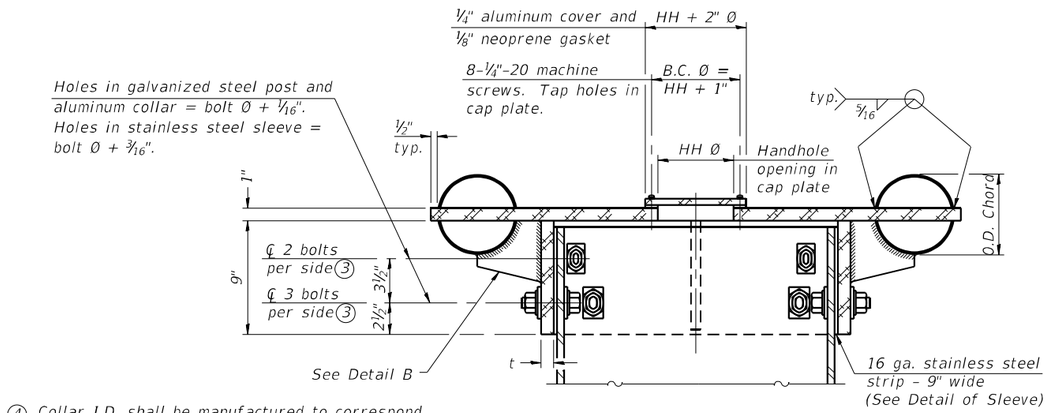

④ Collar I.D. shall be manufactured to correspond to O.D. of actual galvanized post and stainless steel sleeve plus ⅛" (±1/16"). Maximum gap between post and collar at any location equals ⅛" before tightening bolts.

SECTION B-B

Bolts, washers (including contoured washers), and locknuts shall be stainless steel.

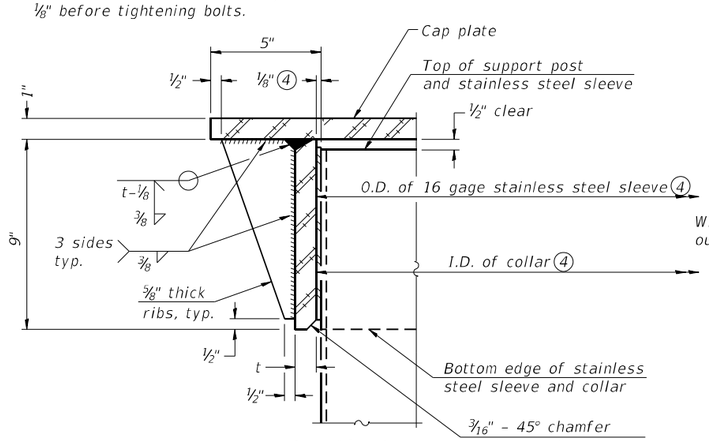

DETAIL A

(Two locations)

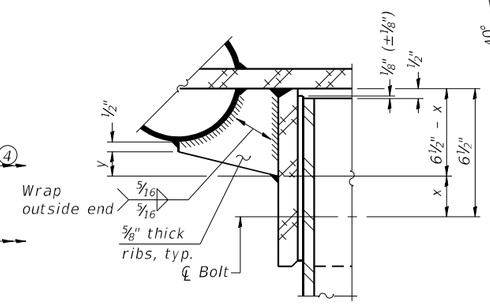

DETAIL B

Two locations
(For details not shown, see Detail C)

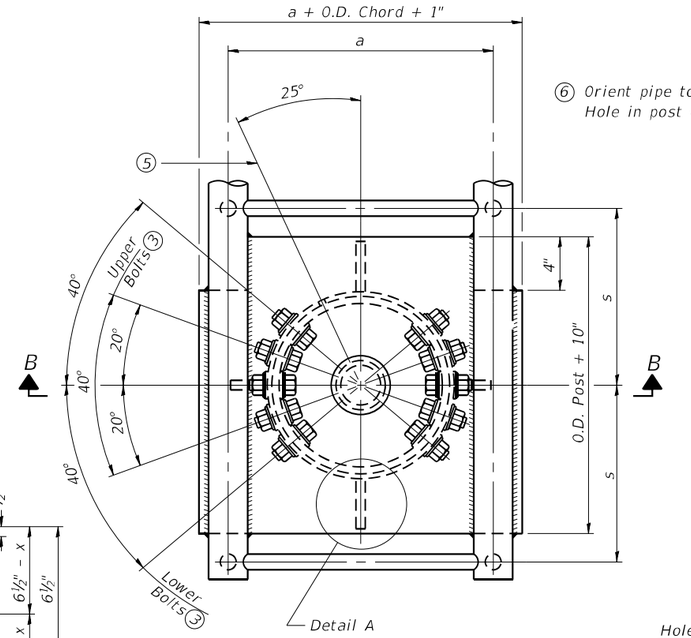

PLAN VIEW - TOP OF COLUMN

⑤ Optional full penetration weld in collar.
(Two locations maximum....(180° apart)....X-ray or UT 100%)

⑥ Orient pipe toward walkway side.
Hole in post = O.D. pipe + ⅛".

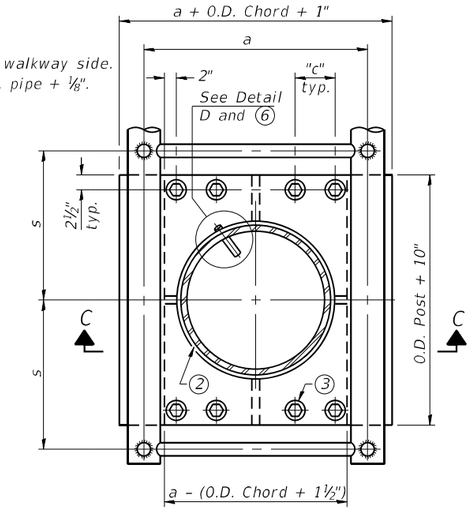

SECTION THRU POST ABOVE LOWER CHORDS

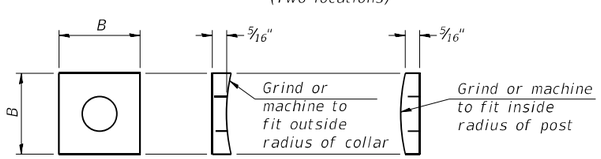

CONTOURED WASHERS

Bolt Size	Contoured Washers	
	Hole Dia.	B
⅞"	1"	2½"
1"	1⅛"	3"
1¼"	1⅜"	3¼"

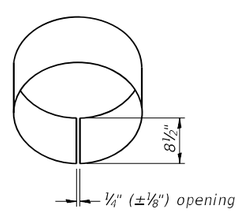

DETAIL OF STAINLESS STEEL SLEEVE

Weld to post after galvanizing.
(Prepare post surface to insure tight, uniform fit and allow welding.)
Welds to be 1½" long at 6" cts. along top edge and at ¼" opening.

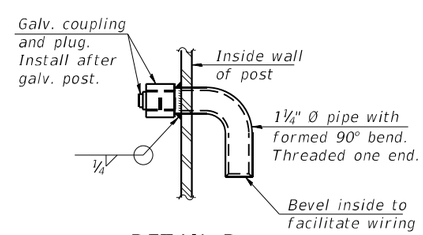

DETAIL D

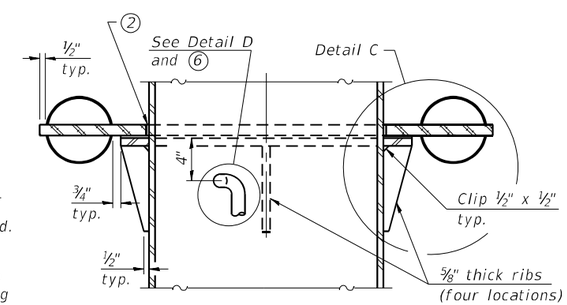

SECTION C-C

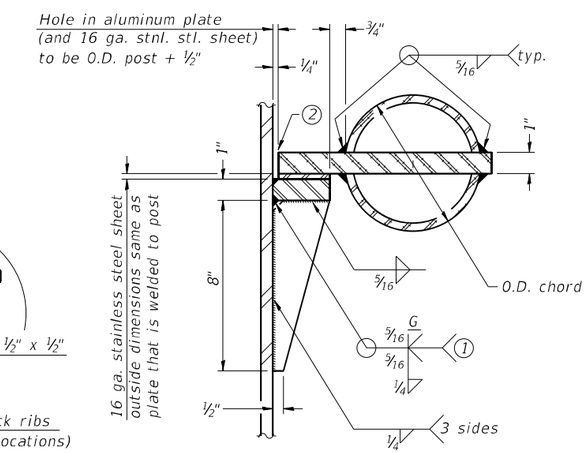

DETAIL C

Truss Type	Post Size	Upper & Lower Connection Bolt Diameter③	Lower Juncture Bolt Spacing Dimension "c"③	Opening in Cap Plate "HH"	Collar Thickness (t)	Side Ribs	
						x	y
I-C-A	16" Ø (83#/')	⅞"	3¼"	8"	⅝"	1¾"	2¼"
II-C-A	24" Ø (125#/')	1"	3½"	12"	⅞"	2"	1¼"
III-C-A (35' max.)	24" Ø (125#/')	1¼"	3½"	12"	⅞"	2"	1"
III-C-A (>35' to 40')	24" Ø (171#/')	1¼"	3½"	12"	⅞"	2"	1"

① Grind top if required to fully seat aluminum plate and stainless steel sheet.

② After tightening lower connection bolts, fill gap with non-hardening, silicone caulk suitable for exterior exposure and acceptable to the Engineer. Cost is included in Overhead Sign Structure Cantilever.

③ Upper and lower connection bolts in collar and bolts at lower chord connection shall be high strength with matching locknuts. Connection bolts shall have 2 stainless steel flat washers each.

OSC-A-3 5-15-2023

MODJESKI and MASTERS

USER NAME = AECook	DESIGNED -	REVISED -
	DRAWN -	REVISED -
PLOT SCALE = 0:2.0000 ':" / in.	CHECKED -	REVISED -
PLOT DATE = 1/20/2025	DATE - 1/20/2025	REVISED -

STATE OF ILLINOIS
DEPARTMENT OF TRANSPORTATION

CANTILEVER SIGN STRUCTURE - JUNCTURE DETAILS
ALUMINUM TRUSS & STEEL POST

SCALE: N.T.S. | SHEET 4 OF 8 SHEETS | STA. | TO STA.

F.A.P RTE.	SECTION	COUNTY	TOTAL SHEETS	SHEET NO.
317	(15B-1)BP,BRR; (14HB-1)BRR	PEO/TAZ	418	103

CONTRACT NO. 68E44

ILLINOIS | FED. AID PROJECT

MODEL: Default
FILE NAME: P:\4312-VBM\CLugageRehab\CADD\Structural_Roadway (MM)\D4468E44-sht-SignCnt4.dgn
1/20/2025 7:34:57 AM

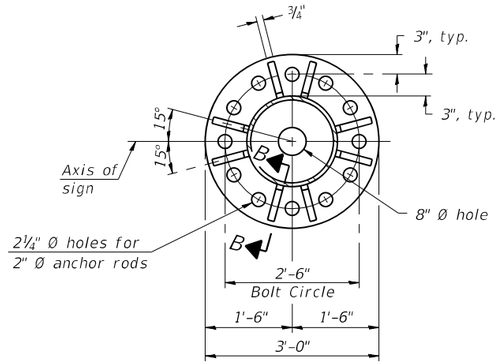

SECTION A-A

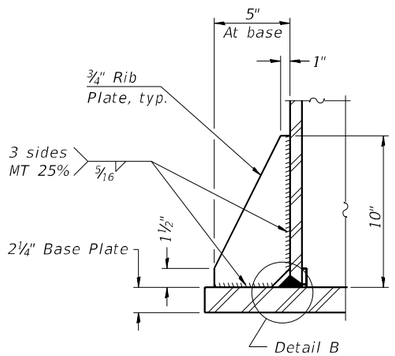

SECTION B-B

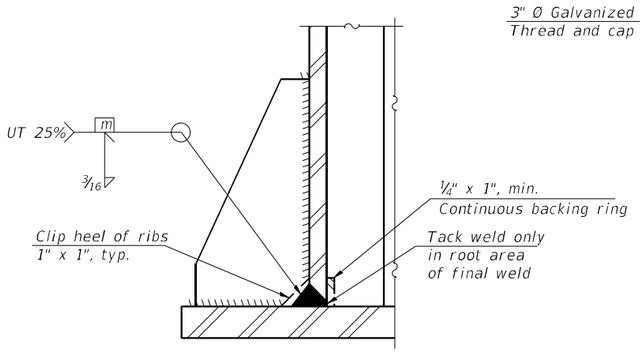

DETAIL B

(Typical rib)

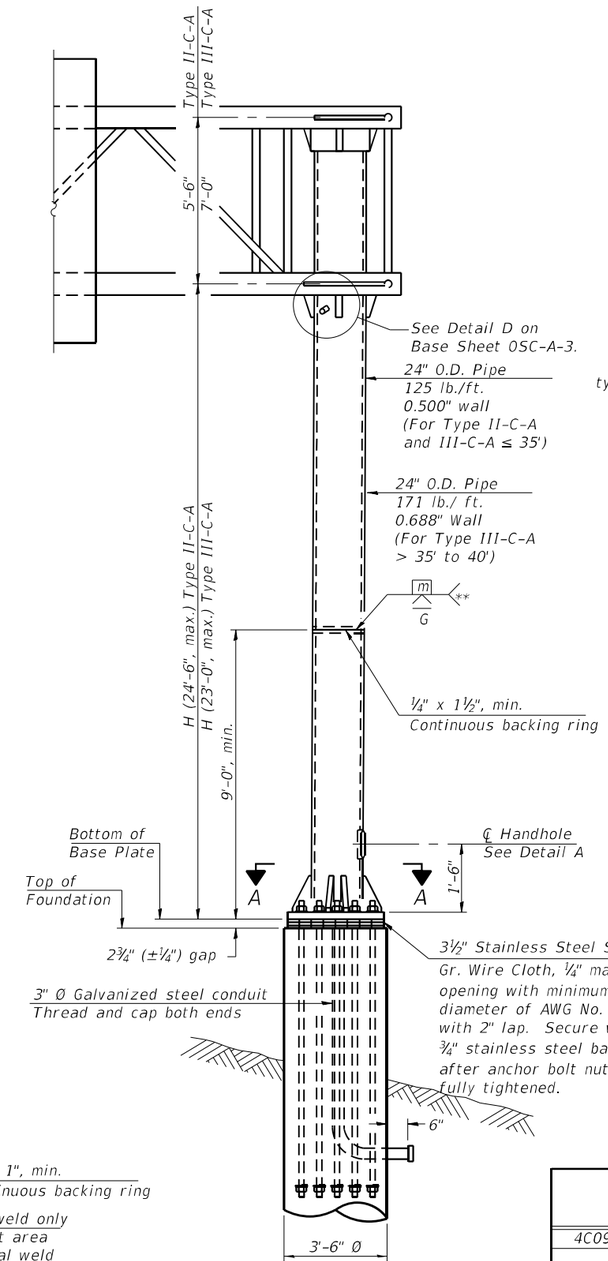

FRONT ELEVATION

For Foundation Details see Base Sheet OSC-A-9.

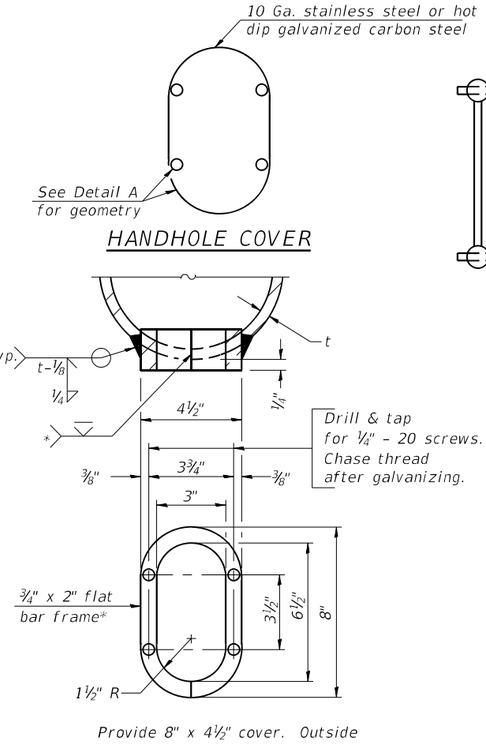

HANDHOLE COVER

Provide 8" x 4½" cover. Outside corners = 2¼" radius. Provide 4-5/16" Ø holes in cover for ¼" - 20 round head hot dip galvanized or stainless steel machine screws. (See cover details.)

DETAIL A

* Bent bars may be butt welded top and bottom or bottom only. In lieu of fabricated handhole frame as shown, may cut from 2" plate (rolling direction vertical). All cut faces to be ground to ANSI Roughness of 500μ in or less.

** Butt welded joint in post is only allowed for post heights (H) over 20 ft. in length. If used, weld procedure must be preapproved by Engineer and joint shall receive 100% RT or UT (tension criteria) at Contractor's expense.

Structure Number	Station	H
4C090U024L000.46	249+42.00	18'-9¾"

Note: "H" based on 15'-0" or actual sign height, whichever is greater.

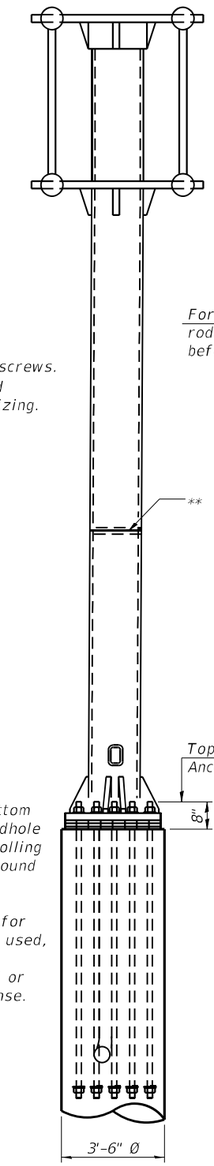

SIDE ELEVATION

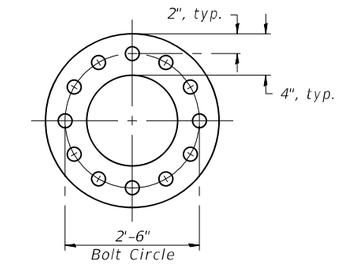

SUGGESTED POSITIONING PLATE

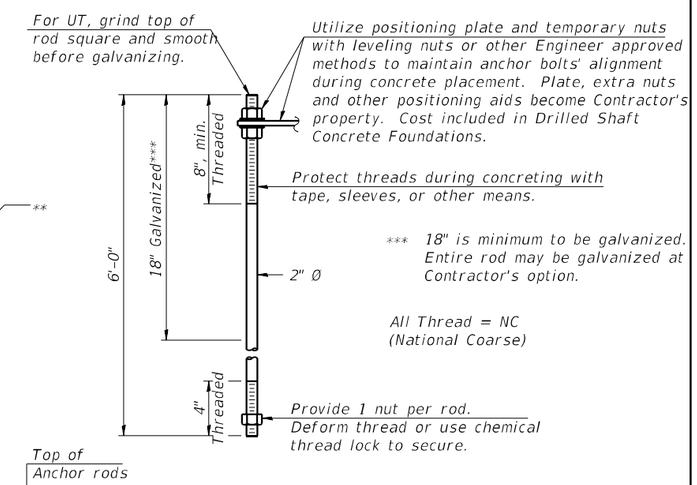

ANCHOR ROD DETAIL

Anchor rods shall conform to ASTM F1554 Grade 105. Galvanize the upper 18" (minimum***) and associated AASHTO M291, Grade A, C or DH heavy hex nuts and hardened washers per AASHTO M232. No welding shall be permitted on rods. Provide a nut at bottom, a hexagon locknut and washer above base plate and a leveling nut and washer below base plate. Nuts shall each be tightened with 200 lb.-ft. minimum torque against base plate. Before or after threading, but before galvanizing, each anchor rod shall be ultrasonically tested (UT) by a Level II or III inspector, qualified in accord with ANSI guidelines, to insure no rejectable flaws exist in the upper 18" (tension criteria). Cost of testing included in Drilled Shaft Concrete Foundations.

OSC-A-5 5-15-2023

MODJESKI-MASTERS

USER NAME = AECook	DESIGNED -	REVISED -	
	DRAWN -	REVISED -	
PLOT SCALE = 0:2.0000 ':" / in.	CHECKED -	REVISED -	
PLOT DATE = 1/20/2025	DATE - 1/20/2025	REVISED -	

STATE OF ILLINOIS
DEPARTMENT OF TRANSPORTATION

CANTILEVER SIGN STRUCTURES. - TYPE II-C-A & III-C-A
TRUSS SUPPORT POST - ALUMINUM TRUSS & STEEL POST

SCALE: N.T.S. | SHEET 5 OF 8 SHEETS | STA. TO STA.

F.A.P RTE.	SECTION	COUNTY	TOTAL SHEETS	SHEET NO.
317	(15B-1)BP,BRR; (14HB-1)BRR	PEO/TAZ	418	104

CONTRACT NO. 68E44

ILLINOIS FED. AID PROJECT

MODEL: Default
FILE NAME: P:\4312-VBM\CLugageRehab\CADD\Structural_Roadway (MM)\D4468E44-sht-SignCnt5.dgn
1/20/2025 7:35:03 AM

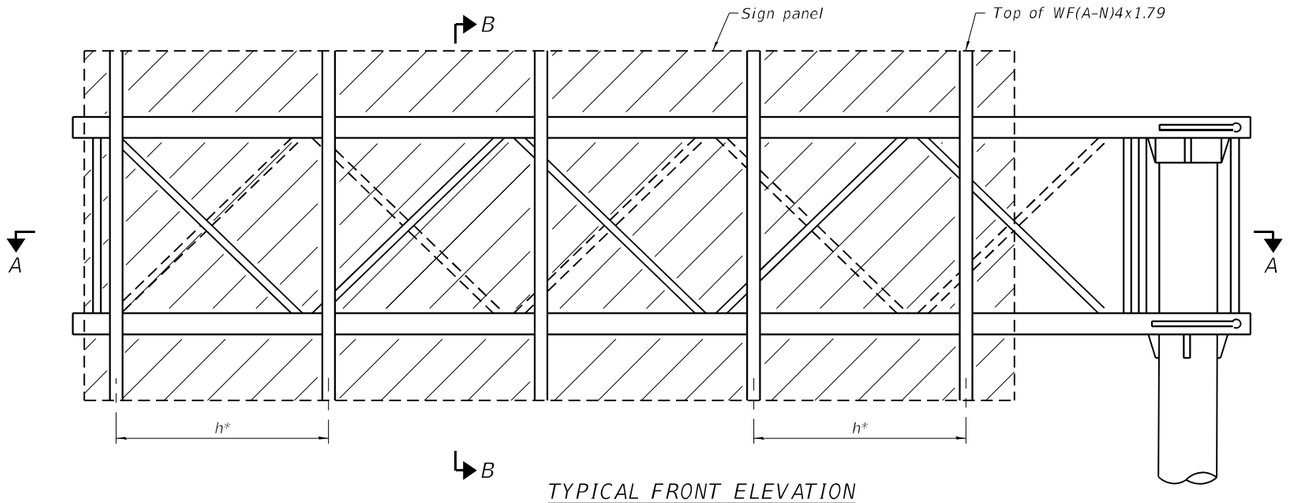

TYPICAL FRONT ELEVATION

BRACKET TABLE

WF(A-N)4x1.79 ASTM B308, Alloy 6061-T6		
Sign Width		Number Brackets Required
Greater Than	Less Than or Equal To	
	8'-0"	2
8'-0"	14'-0"	3
14'-0"	20'-0"	4
20'-0"	26'-0"	5
26'-0"	32'-0"	6

Structure Number	Station	TGL
4C090U024L000.46	249+42.00	26'-0"

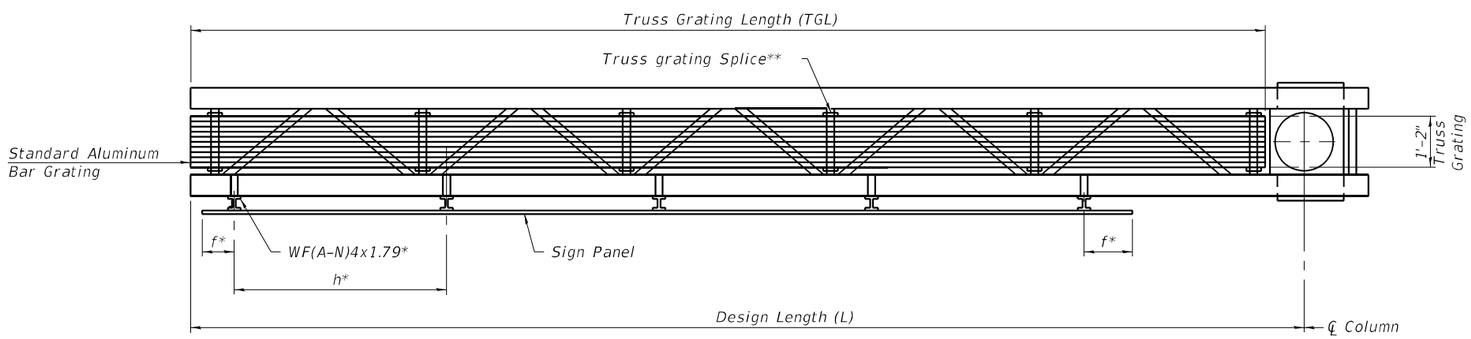

SECTION A-A

$$TGL = L - \left(\frac{\text{Post O.D.}}{2} + 6'' \right)$$

* Space sign brackets WF(A-N)4x1.79 for efficiency and within limits shown:

f = 12" maximum, 4" minimum (End of sign to ℄ of nearest bracket)
h = 6'-0" maximum (℄ to ℄ sign support brackets, WF(A-N)4x1.79

** Use and location of grating splices are optional, based on lengths needed and material availability.

Notes:
For details of sign placement, sign brackets, truss gratings, grating splices, and Section B-B, see Base Sheet OSC-A-7-NW.
Truss grating to facilitate inspection shall run full length of cantilevers. Cost of truss grating is included in Overhaed Sign Structure Cantilever.
Truss grating dimensions are nominal and may vary (width ½"±, depth ½"±) based on available standard widths.

OSC-A-6-NW 5-15-2023

MODEL: Default
FILE NAME: P:\4312-WBM\CLigageRehab\CADD\Structural_Roadway (MM)\D468E44-sh-SignCnt6.dgn

MODJESKI and MASTERS

USER NAME = AECook	DESIGNED -	REVISED -	
	DRAWN -	REVISED -	
PLOT SCALE = 0:2.0000 ':" / in.	CHECKED -	REVISED -	
PLOT DATE = 1/20/2025	DATE - 1/20/2025	REVISED -	

STATE OF ILLINOIS
DEPARTMENT OF TRANSPORTATION

CANTILEVER SIGN STRUCTURES ALUMINUM WALKWAY
DETAILS - ALUMINUM TRUSS & STEEL POST

SCALE: N.T.S. | SHEET 6 OF 8 SHEETS | STA. | TO STA.

F.A.P RTE.	SECTION	COUNTY	TOTAL SHEETS	SHEET NO.
317	(15B-1)BP,BRR; (14HB-1)BRR	PEO/TAZ	418	105
		CONTRACT NO. 68E44		
	ILLINOIS	FED. AID PROJECT		

1/20/2025 7:35:11 AM

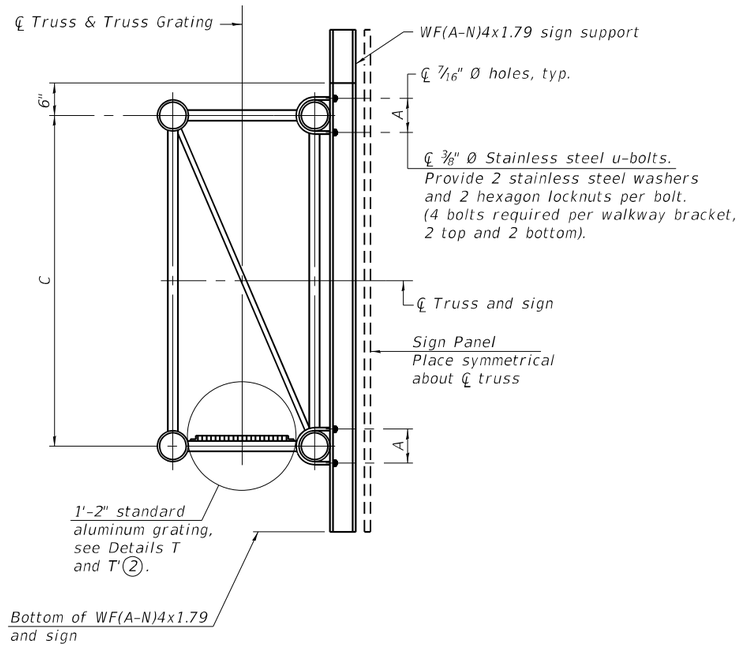

SECTION B-B

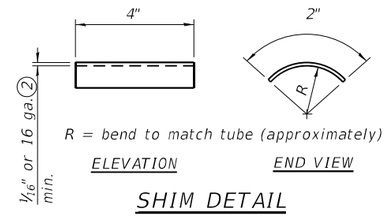

SHIM DETAIL

① Drilling holes in grating may be done in shop or field, based on Contractor's preference and subject to accurate alignment.

② Stainless steel shims shall be placed as shown in Detail T if needed to compensate for alignment variations between horizontal and diagonal pipes beyond adjustment provided by angles. Thicker shims may be used subject to shims performing properly.

③ Tube to grating gap may vary from 0 to ½", max. to align walkway, allow for camber, etc.

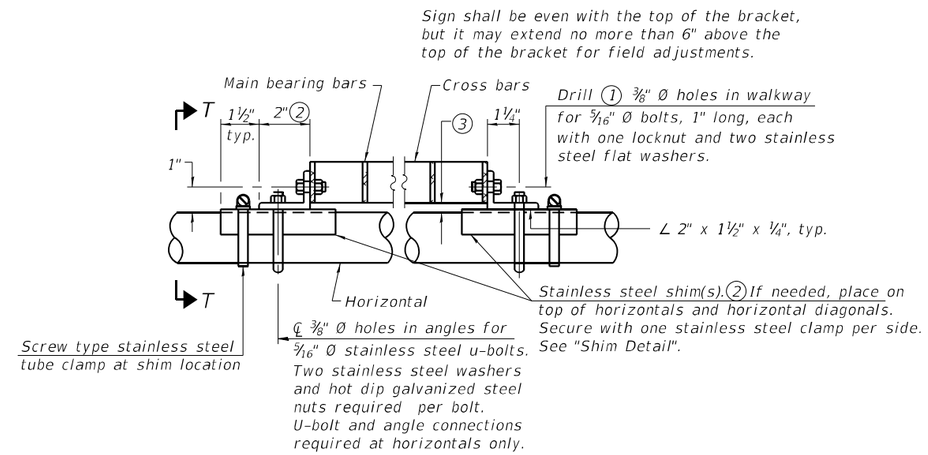

DETAIL T

(Continuous Truss grating)

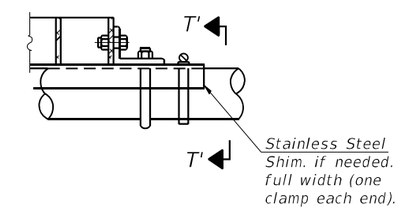

DETAIL T'

(Truss grating splice)

Details not shown same as Detail T. Alternate materials may be used subject to the Engineer's review and approval.

SPECIFICATIONS FOR STANDARD ALUMINUM GRATING

Main Bearing Bars (MBB) shall be 3/16" x 1½" on 1 3/16" centers and conform to ASTM B211 Alloy 6061-T6.

Cross bars (CB) shall be 3/16" x 1½" on 4" centers and conform to ASTM B221 Alloy 6063-T5 or 6061-T6.

OR

Aluminum Grating with modified "t" sections for main bearing bars shall meet the following requirements:

Main bars shall conform to ASTM B221 Alloy 6061-T6 and have a minimum section modulus equal to 0.0705 in.³ per bar, a depth of 1½", spaced on 1 3/16" centers.

Cross bars shall conform to ASTM B221 Alloy 6063-T5 or T-42 and spaced on 4" centers.

Structure Number	Station	A	C
4C090U024L000.46	249+42.00	6 7/8"	5'-6"

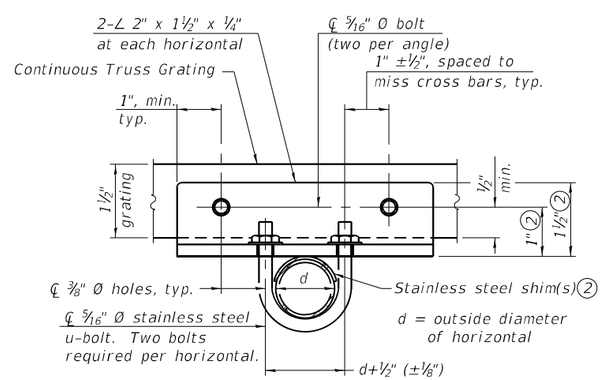

SECTION T-T

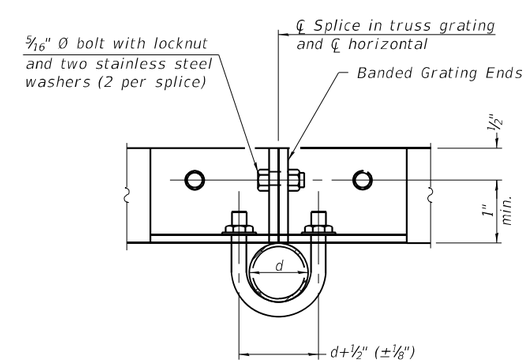

SECTION T'-T'

OSC-A-7-NW 5-15-2023

MODEL: Default
FILE NAME: P:\4312-WBM\CL\pageRehab\CADD\Structural_Roadway (MM)\D468E44-sh-SignCnt7.dgn

MODJESKI and MASTERS	USER NAME = AECook	DESIGNED -	REVISED -
		DRAWN -	REVISED -
	PLOT SCALE = 0:2.0000 ':' / in.	CHECKED -	REVISED -
	PLOT DATE = 1/20/2025	DATE - 1/20/2025	REVISED -

STATE OF ILLINOIS
DEPARTMENT OF TRANSPORTATION

CANTILEVER SIGN STRUCTURES - WALKWAY DETAILS
ALUMINUM TRUSS & STEEL POST

SCALE: N.T.S. | SHEET 7 OF 8 SHEETS | STA. | TO STA.

F.A.P RTE.	SECTION	COUNTY	TOTAL SHEETS	SHEET NO.
317	(15B-1)BP,BRR; (14HB-1)BRR	PEO/TAZ	418	106
		CONTRACT NO. 68E44		
		ILLINOIS FED. AID PROJECT		

1/20/2025 7:35:18 AM

* Grind anchor rod to bright finish at ground clamp location before installing clamp.

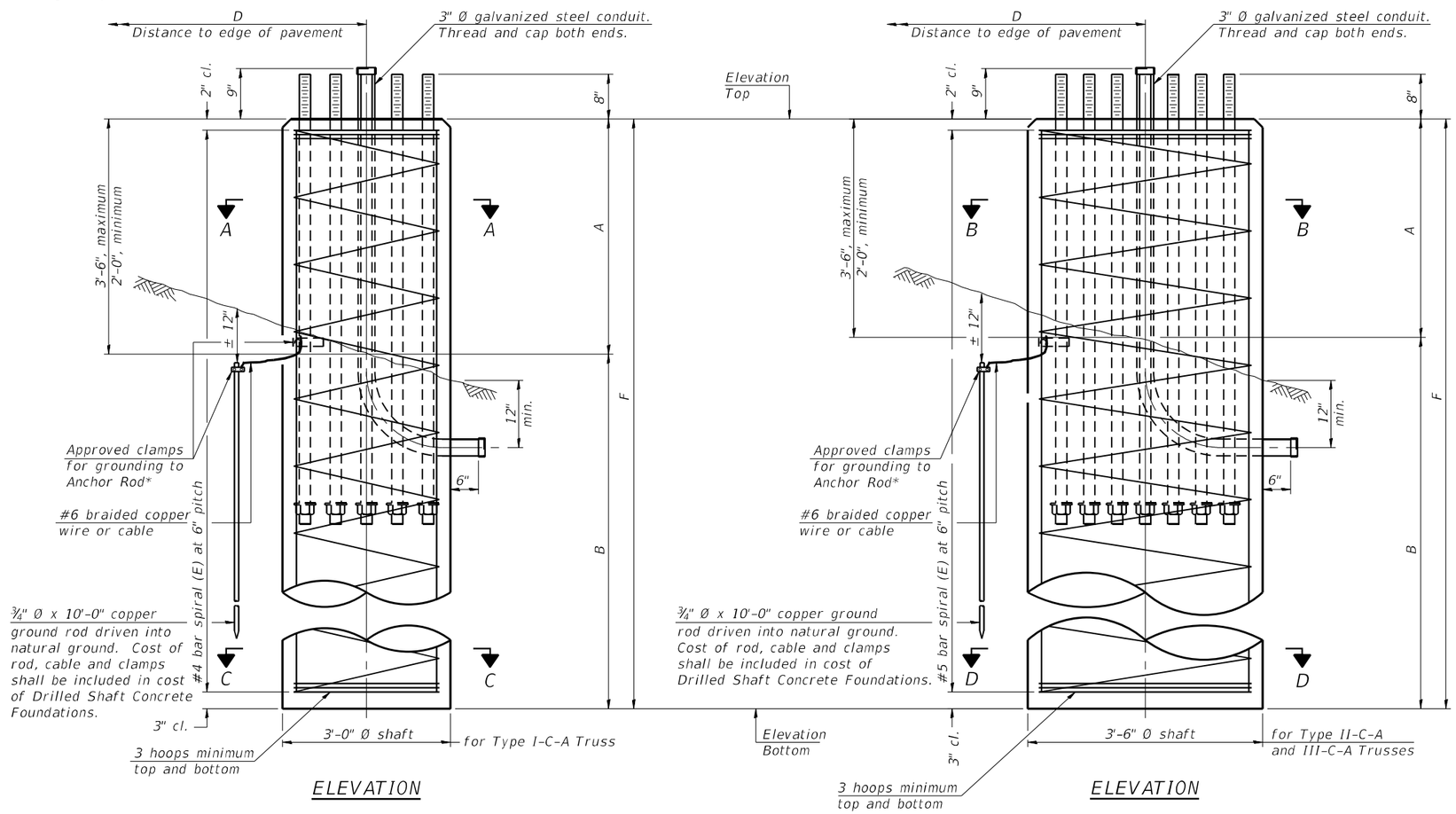

ELEVATION

ELEVATION

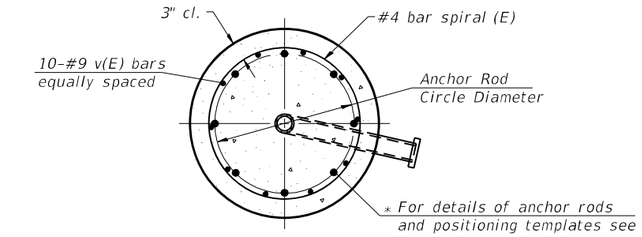

SECTION A-A

3'-0" Ø shaft

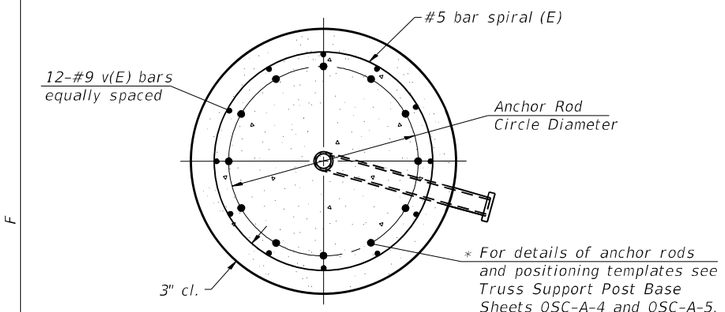

SECTION B-B

3'-6" Ø shaft

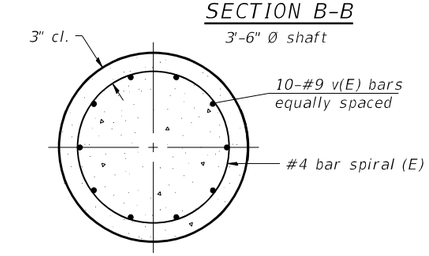

SECTION C-C

3'-0" Ø shaft

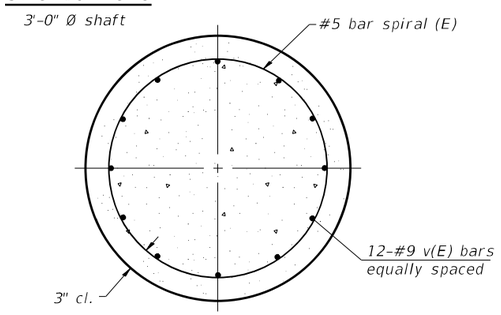

SECTION D-D

3'-6" Ø shaft

NOTES:

The foundation dimensions shown in the Foundation Design Table are based on the presence of mostly cohesive soils with an average Unconfined Compressive Strength (Qu) of at least 1.25 tsf, which must be determined by previous soil investigations at the jobsite. When other conditions are indicated, the boring data will be included in the plans and the foundation dimensions shown in the Foundation Data Table will be the result of site specific designs.

If the conditions encountered are different than those indicated, the Contractor shall notify the Engineer to determine if the foundation dimensions need to be modified. If dimensions "B" or "F" are revised by more than 12" by the Contractor, "as-built" plans shall be prepared and submitted to the District Bureau of Operations for future reference.

No sonotubes or decomposable forms shall be used below the lower conduit entrance. Permanent metal forms or other shielding may not be left in place below that elevation without the Engineer's written permission.

Concrete shall be placed monolithically, without construction joints.

Backfill shall be placed per Article 502 of Standard Specification and prior to erection of support column.

A normal surface finish followed by a Concrete Sealer application will be required on concrete surfaces above the lowest elevation 6" below finished ground line. Cost included in "Drilled Shaft Concrete Foundation".

FOUNDATION DESIGN TABLE

Truss Type	Post Base Sheet	Maximum Cantilever Length (ft)	Maximum Total Sign Area (sq ft)	Shaft Diameter (in)	"B" Depth (ft)	Anchor Rods No.	Anchor Rods Diameter (in)	Anchor Rod Circle Diameter (in)
I-C-A	OSC-A-4	25	170	3.0	16.0	8	2	22
II-C-A	OSC-A-5	30	170	3.5	17.0	12	2	30
II-C-A	OSC-A-5	30	340	3.5	21.5	12	2	30
III-C-A	OSC-A-5	35	170	3.5	19.0	12	2	30
III-C-A	OSC-A-5	35	250	3.5	22.5	12	2	30
III-C-A	OSC-A-5	35	400	3.5	26.5	12	2	30
III-C-A	OSC-A-5	40	400	3.5	32.0	12	2	30

FOUNDATION DATA TABLE

Structure Number	Station	Truss Type	Shaft Diameter	Elevation Top	Elevation Bottom	Qu	A	B	F	Class DS Concrete Cubic Yards
4C090U024L000.46	249+42.00	II-C-A	3'-6"	465.13	439.13	3.3	2'-0"	24'-0"	26'-0"	9.3

OSC-A-9 5-15-2023

MODEL: Default
FILE NAME: P:\4312-VBM&C\LugageRehab\CADD\Structural_Roadway IMM\D468E14-sh-SignCnt8.dgn

MODJESKI and MASTERS

USER NAME = AECook	DESIGNED -	REVISED -	
	DRAWN -	REVISED -	
PLOT SCALE = 0:2.0000 ':" / in.	CHECKED -	REVISED -	
PLOT DATE = 1/20/2025	DATE - 1/20/2025	REVISED -	

STATE OF ILLINOIS
DEPARTMENT OF TRANSPORTATION

CANTILEVER SIGN STRUCTURES - DRILLED SHAFT
ALUMINUM TRUSS & STEEL POST

SCALE: N.T.S. | SHEET 8 OF 8 SHEETS | STA. | TO STA.

F.A.P RTE.	SECTION	COUNTY	TOTAL SHEETS	SHEET NO.
317	(15B-1)BP,BRR; (14HB-1)BRR	PEO/TAZ	418	107

CONTRACT NO. 68E44

ILLINOIS | FED. AID PROJECT

1/20/2025 7:35:28 AM

SIGN DETAIL
NOT TO SCALE

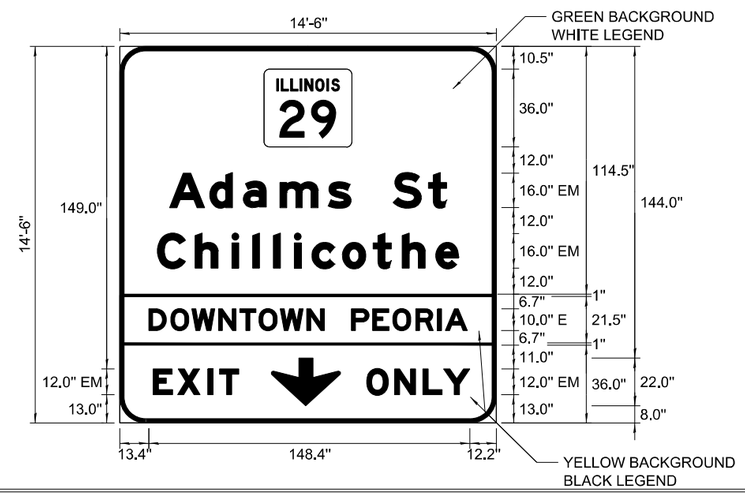

SIGN NUMBER	SGN-TR-01-P		
WIDTH x HGHT.	14'-6" x 14'-6"		
BORDER WIDTH	2"		
CORNER RADIUS	12"		
MOUNTING	Ground		
BACKGROUND	TYPE:	Reflective	
	COLOR:	Green/Yellow	
LEGEND/BORDER	TYPE:	Reflective	
	COLOR:	White/Black	

SYMBOL	ROT	X	Y	WID	HT
M1-H100A-2-32-15D	0	66.75	127.5	40.5	36
ARDOWN	0	70	8.03	32	21.96

Panel Style: guide_fwy_overhead_dtwn peoria.ssi
Dimensions are in inches.tenths

Letter locations are panel edge to lower left corner

LETTER POSITIONS (X)

																																					LENGTH	SERIES/SIZE
A	d	a	m	s		S	t																															EM 2000
23	41.56	57.08	74.04	96.28	108.6	126.36	142.68																														128	16/12
C	h	i	l	l	i	c	o	t	h	e																												EM 2000
17.4	34.84	51.8	61.4	71	80.6	88.76	102.84	117.08	130.52	146.04																											139.2	16/12
D	O	W	N	T	O	W	N		P	E	O	R	I	A																								E 2000
13.4	23.5	33.3	45.6	55.4	64.3	74.1	86.4	95.8	107.1	116.9	126.1	136.8	146.9	150.4																							147.2	10
E	X	I	T																																			EM 2000
15.48	26.72	40.69	46.12																																		39.52	12
O	N	L	Y																																			EM 2000
114	126.97	140.07	149.67																																		47.79	12

MODEL: Default
FILE NAME: P:\4312-VBM\cCLugageRehab\CADD\Structural_Roadway (MM)\D468E44-sh-SignPnl1.dgn

MODJESKI and MASTERS

USER NAME = AECook	DESIGNED -	REVISED -
	DRAWN -	REVISED -
PLOT SCALE = 5.833 ' / in.	CHECKED -	REVISED -
PLOT DATE = 1/20/2025	DATE - 1/20/2025	REVISED -

STATE OF ILLINOIS
DEPARTMENT OF TRANSPORTATION

US 150 WESTBOUND McCLUGAGE BRIDGE PROJECT
SIGN PANELS

SCALE: N.T.S. | SHEET 1 OF 5 SHEETS | STA. | TO STA.

F.A.P RTE.	SECTION	COUNTY	TOTAL SHEETS	SHEET NO.
317	(15B-1)BP,BRR; (14HB-1)BRR	PEO/TAZ	418	108
		CONTRACT NO. 68E44		
		ILLINOIS	FED. AID PROJECT	

1/20/2025 7:35:32 AM

SIGN DETAIL
NOT TO SCALE

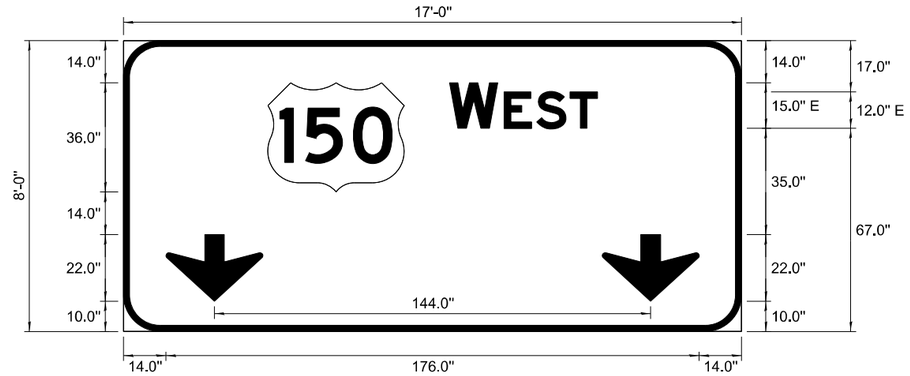

SIGN NUMBER	SGN-TR-02-P
WIDTH x HGHT.	17'-0" x 8'-0"
BORDER WIDTH	2"
CORNER RADIUS	12"
MOUNTING	Overhead
BACKGROUND	TYPE: Reflective
	COLOR: Green
LEGEND/BORDER	TYPE: Reflective
	COLOR: White/White

SYMBOL	ROT	X	Y	WID	HT
M1_4	0	47.61	46	45	36
ARDOWN	0	14.01	10	31.99	21.96
ARDOWN	0	158	10	31.99	21.96

Panel Style: guide_fwy_overhead.ssi
Dimensions are in inches.tenths

Letter locations are panel edge to lower left corner

LETTER POSITIONS (X)

W	E	S	T	LENGTH	SERIES-SIZE
					E 2000
107.61	125.67	136.35	147.39	48.78	15,12

MODEL: Default
FILE NAME: P:\4312-WBMcCLugageRehab\CADD\Structural_Roadway (MM)\D468E44-sht-SignPnl2.dgn

MODJESKI and MASTERS

USER NAME = AECook	DESIGNED -	REVISED -	
	DRAWN -	REVISED -	
PLOT SCALE = 4.167 ' / in.	CHECKED -	REVISED -	
PLOT DATE = 1/20/2025	DATE - 1/20/2025	REVISED -	

STATE OF ILLINOIS
DEPARTMENT OF TRANSPORTATION

US 150 WESTBOUND McCLUGAGE BRIDGE PROJECT
SIGN PANELS

SCALE: N.T.S. | SHEET 2 OF 5 SHEETS | STA. TO STA.

F.A.P RTE.	SECTION	COUNTY	TOTAL SHEETS	SHEET NO.
317	(15B-1)BP,BRR; (14HB-1)BRR	PEO/TAZ	418	109
		CONTRACT NO. 68E44		
	ILLINOIS	FED. AID PROJECT		

1/20/2025 7:35:37 AM

SIGN DETAIL
NOT TO SCALE

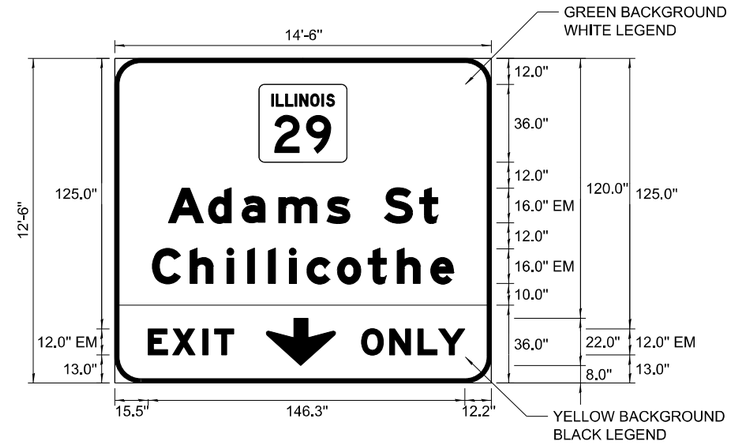

SIGN NUMBER	SGN–BR–03–P
WIDTH x HGHT.	14'–6" x 12'–6"
BORDER WIDTH	2"
CORNER RADIUS	12"
MOUNTING	Overhead
BACKGROUND	TYPE: Reflective
	COLOR: Green/Yellow
LEGEND/BORDER	TYPE: Reflective
	COLOR: White/Black

SYMBOL	ROT	X	Y	WID	HT
M1–I100A–2–32–15D	0	66.75	102	40.5	36
ARDOWN	0	70	8.02	32	21.96

Panel Style: guide_fwy_overhead.ssi
Dimensions are in inches.tenths

Letter locations are panel edge to lower left corner

LETTER POSITIONS (X)

																																						LENGTH	SERIES-SIZE
A	d	a	m	s		S	t																																EM 2000
24.76	43.32	58.84	75.8	98.04	108.6	124.6	140.92																															124.48	16\12
C	h	i	l	l	i	c	o	t	h	e																													EM 2000
17.4	34.84	51.8	61.4	71	80.6	88.76	102.84	117.08	130.52	146.04																												139.2	16\12
E	X	I	T																																				EM 2000
15.48	26.72	40.69	46.12																																			39.52	12
O	N	L	Y																																				EM 2000
114	126.97	140.06	149.67																																			47.79	12

MODEL: Default
FILE NAME: P:\312-VBM\cCLugageRehab\CADD\Structural_Roadway (MM)\D468E44-sh-SignPnl3.dgn

1/20/2025 7:35:40 AM

MODJESKI and MASTERS

USER NAME = AECook	DESIGNED -	REVISED -
	DRAWN -	REVISED -
PLOT SCALE = 5.833 ' / in.	CHECKED -	REVISED -
PLOT DATE = 1/20/2025	DATE - 1/20/2025	REVISED -

STATE OF ILLINOIS
DEPARTMENT OF TRANSPORTATION

US 150 WESTBOUND McCLUGAGE BRIDGE PROJECT
SIGN PANELS

SCALE: N.T.S. | SHEET 3 OF 5 SHEETS | STA. | TO STA.

F.A.P RTE.	SECTION	COUNTY	TOTAL SHEETS	SHEET NO.
317	(15B-1)BP,BRR; (14HB-1)BRR	PEO/TAZ	418	110
		CONTRACT NO. 68E44		
	ILLINOIS	FED. AID PROJECT		

SIGN DETAIL
NOT TO SCALE

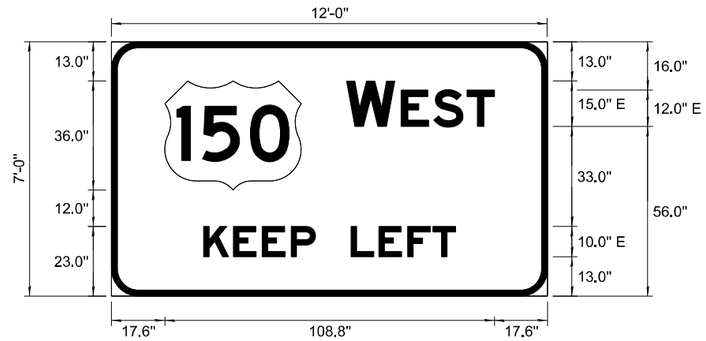

SIGN NUMBER	SGN-BR-04-P
WIDTH x HGHT.	12'-0" x 7'-0"
BORDER WIDTH	2"
CORNER RADIUS	9"
MOUNTING	Ground
BACKGROUND	TYPE: Reflective
	COLOR: Green
LEGEND/BORDER	TYPE: Reflective
	COLOR: White/White

SYMBOL	ROT	X	Y	WID	HT
M1_4	0	17.61	35	45	36

Panel Style: guide_fwy_pull-thru_IDOT.ssi
Dimensions are in inches.tenths

Letter locations are panel edge to lower left corner

LETTER POSITIONS (X)

																																				LENGTH	SERIES-SIZE
W	E	S	T																																		E 2000
77.61	95.67	106.35	117.39																															48.78	15,12
K	E	E	P		L	E	F	T																													E 2000
30.4	40.3	49.8	59.3	67.8	79.1	88.3	97.8	106.1																										83.2	10

USER NAME = AECook	DESIGNED -	REVISED -	STATE OF ILLINOIS DEPARTMENT OF TRANSPORTATION
	DRAWN -	REVISED -	
PLOT SCALE = 4.167 ' / in.	CHECKED -	REVISED -	
PLOT DATE = 1/20/2025	DATE - 1/20/2025	REVISED -	

MODJESKI and MASTERS

US 150 WESTBOUND McCLUGAGE BRIDGE PROJECT
SIGN PANELS

SCALE: N.T.S. | SHEET 4 OF 5 SHEETS | STA. TO STA.

F.A.P RTE.	SECTION	COUNTY	TOTAL SHEETS	SHEET NO.
317	(15B-1)BP,BRR; (14HB-1)BRR	PEO/TAZ	418	111
		CONTRACT NO. 68E44		
	ILLINOIS	FED. AID PROJECT		

MODEL: Default
FILE NAME: P:\4312-WBMcCLugageRehab\CADD\Structural_Roadway (MM)\D468E44-sht-SignPnl4.dgn
1/20/2025 7:35:45 AM

SIGN DETAIL
NOT TO SCALE

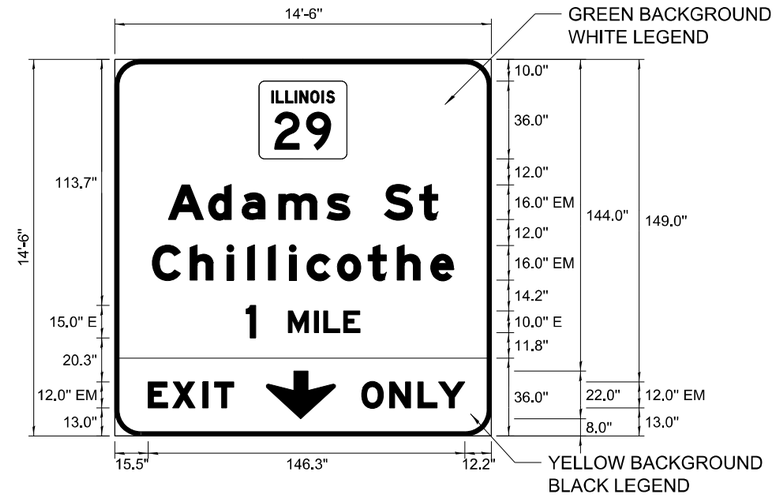

SIGN NUMBER	SGN–TR–05–P	
WIDTH x HGHT.	14'–6" x 14'–6"	
BORDER WIDTH	2"	
CORNER RADIUS	12"	
MOUNTING	Overhead	
BACKGROUND	TYPE:	Reflective
	COLOR:	Green/Yellow
LEGEND/BORDER	TYPE:	Reflective
	COLOR:	White/Black

SYMBOL	ROT	X	Y	WID	HT
M1–I100A–2–32–15D	0	66.75	128	40.5	36
ARDOWN	0	70	8.02	32	21.96

Panel Style: guide_fwy_overhead.ssi
Dimensions are in inches.tenths

Letter locations are panel edge to lower left corner

LETTER POSITIONS (X)

																																						LENGTH	SERIES/SIZE
A	d	a	m	s		S	t																																EM 2000
24.76	43.32	58.84	75.8	98.04	108.6	124.6	140.92																															124.48	1612
C	h	i	l	l	i	c	o	t	h	e																													EM 2000
17.4	34.84	51.8	61.4	71	80.6	88.76	102.84	117.08	130.52	146.04																												139.2	1612
1	M	I	L	E																																			E 2000
60.7	80.2	92.2	96.6	105.8																																		52.6	15,10
E	X	I	T																																				EM 2000
15.48	26.72	40.69	46.12																																			39.52	12
O	N	L	Y																																				EM 2000
114	126.97	140.06	149.67																																			47.79	12

MODEL: Default
FILE NAME: P:\312-VBM\cCLugageRehab\CADD\Structural_Roadway (MM)\D468E44-sh-SignPnl5.dgn

1/20/2025 7:35:48 AM

MODJESKI and MASTERS

USER NAME = AECook	DESIGNED -	REVISED -
	DRAWN -	REVISED -
PLOT SCALE = 5.833 ' / in.	CHECKED -	REVISED -
PLOT DATE = 1/20/2025	DATE - 1/20/2025	REVISED -

STATE OF ILLINOIS
DEPARTMENT OF TRANSPORTATION

US 150 WESTBOUND McCLUGAGE BRIDGE PROJECT
SIGN PANELS

SCALE: N.T.S. | SHEET 5 OF 5 SHEETS | STA. | TO STA.

F.A.P RTE.	SECTION	COUNTY	TOTAL SHEETS	SHEET NO.
317	(15B-1)BP,BRR; (14HB-1)BRR	PEO/TAZ	418	112
		CONTRACT NO. 68E44		
	ILLINOIS	FED. AID PROJECT		

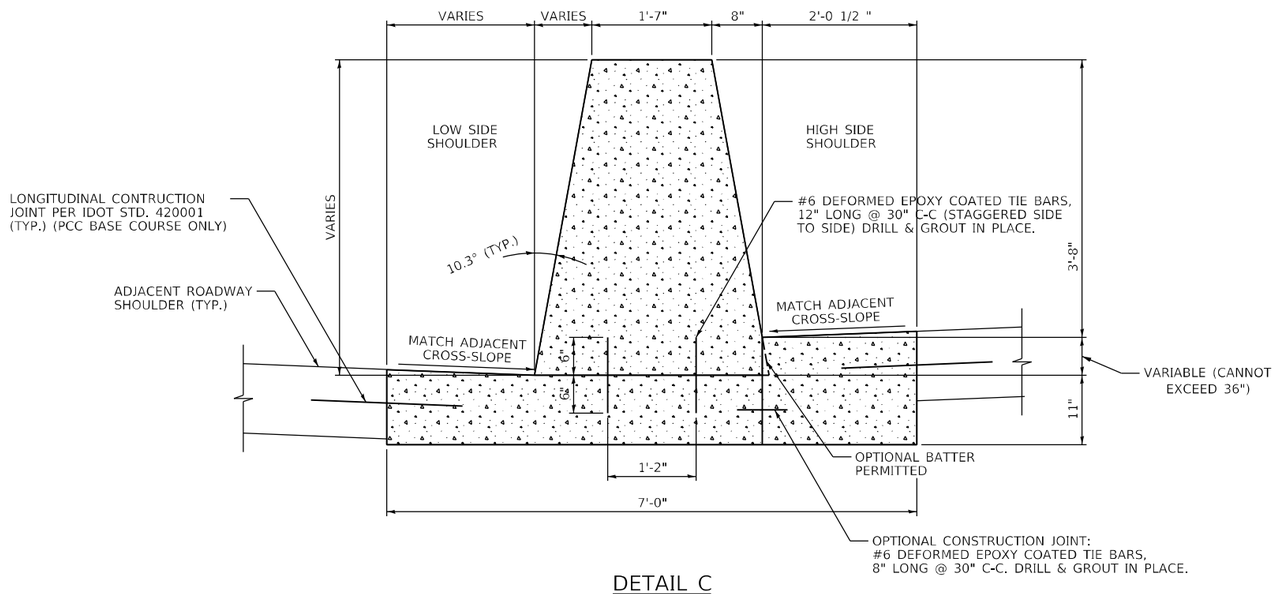

DETAIL C

CONCRETE BARRIER, VARIABLE CROSS-SECTION, 44-INCH HEIGHT (63700380)
CONCRETE BARRIER BASE (SPECIAL) (X0326382)

HANSON
Hanson Professional Services Inc.

LAYOUT	RLA	10/31/2023
DRAWN	CM/RLA	1/13/2025
REVIEWED	MGD	1/14/2025

MODEL: Default
FILE NAME: h:\Jobs\20H0049\CADD\CAD_Sheets\sht-detail31.dgn

USER NAME = Ander00846	DESIGNED - RLA	REVISED -	
	DRAWN - CM/RLA	REVISED -	
PLOT SCALE = 2.00 ' / in.	CHECKED - MGD	REVISED -	
PLOT DATE = 2/13/2025	DATE - 1/14/2025	REVISED -	

STATE OF ILLINOIS
DEPARTMENT OF TRANSPORTATION

WESTBOUND US 150 McCLUGAGE BRIDGE
CONCRETE BARRIER DETAIL

SCALE: N/A | SHEET OF SHEETS | STA. TO STA.

F.A.P. RTE.	SECTION	COUNTY	TOTAL SHEETS	SHEET NO.
317A	(15B-1)BP, BRR;(14HB-1)BRR	PEORIA/TAZWELL	418	113
		CONTRACT NO. 68E44		
		ILLINOIS FED. AID PROJECT		

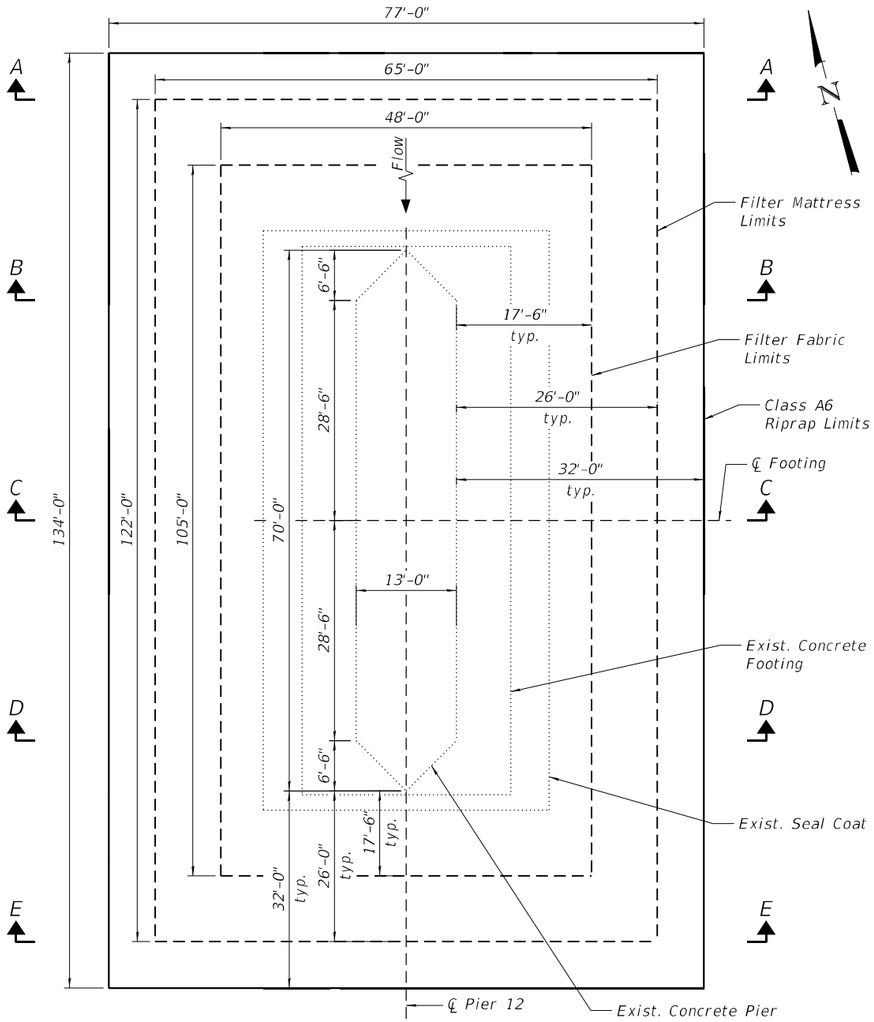

PLAN VIEW

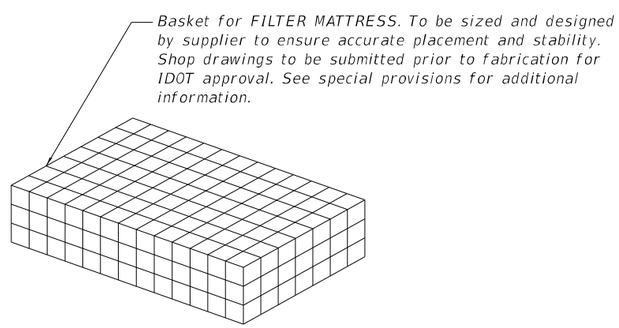

BASKET FOR FILTER MATTRESS

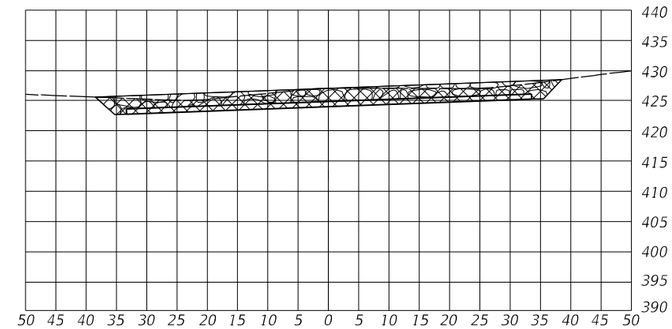

SECTION A-A

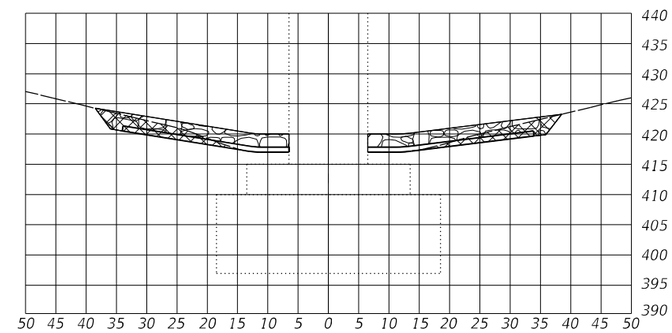

SECTION B-B

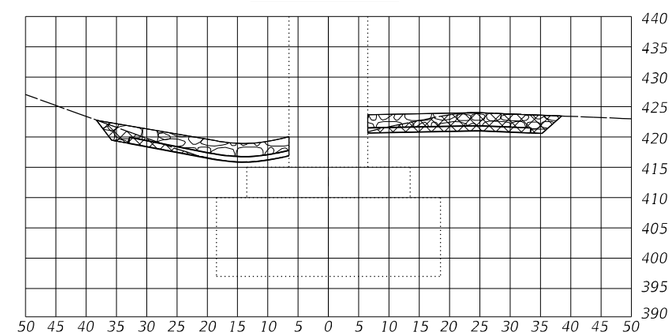

SECTION C-C

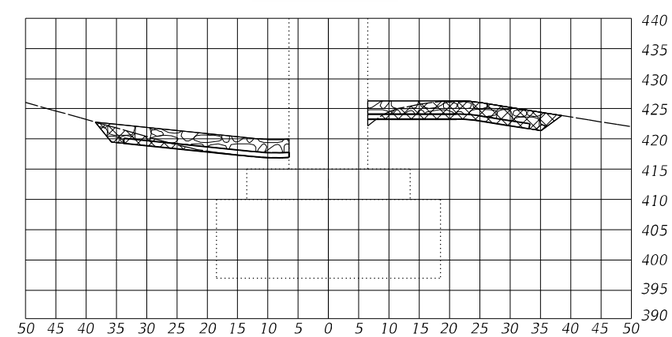

SECTION D-D

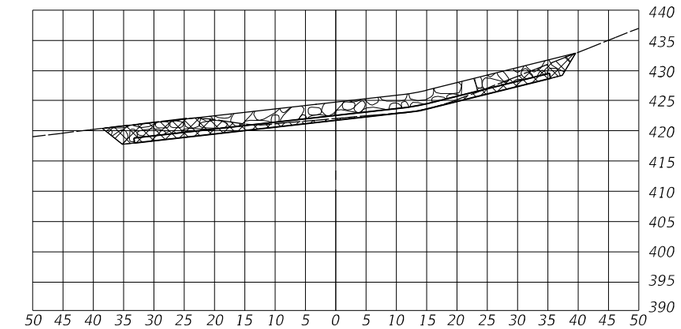

SECTION E-E

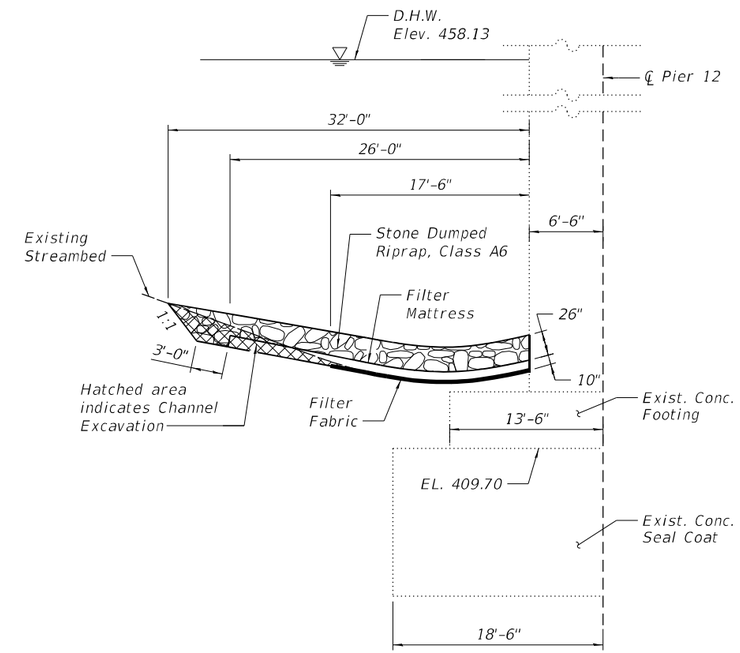

TYPICAL SECTION - PIER 12

Notes:

Layout of the scour countermeasure system may be varied to suit ground conditions in the field as directed by the Engineer.

Fill scour holes as needed using Stone Dumped Riprap, Class A1 to develop a smooth surface for placement of filter mattress.

Cost of filter fabric included with Filter Mattress.

Channel excavation beyond the limits shown for Stone Dumped Riprap, Class A6 or Filter Mattress will not be measured for payment.

PIER 12
BILL OF MATERIAL

Item	Unit	Quantity
Channel Excavation	Cu. Yd.	558
Stone Dumped Riprap, Class A6	Ton	1,151
Stone Dumped Riprap, Class A1	Ton	2
Filter Mattress	Sq. Yd.	790

MODEL: Default
FILE NAME: P:\4312-VBM\CLugageRehab\CADD\Structural_Roadway (MMI)\D468E44-sht-Scour1.dgn

1/20/2025 7:32:44 AM

MODJESKI--MASTERS

USER NAME = AECook	DESIGNED - SEC	REVISED -	
	DRAWN - ATH	REVISED -	
PLOT SCALE = 0.1667 ' / in.	CHECKED - YSS	REVISED -	
PLOT DATE = 1/20/2025	DATE - 1/20/2025	REVISED -	

STATE OF ILLINOIS
DEPARTMENT OF TRANSPORTATION

US 150 WESTBOUND McCLUGAGE BRIDGE PROJECT
SCOUR COUNTERMEASURES - 1

SCALE: N.T.S. | SHEET 1 OF 8 SHEETS | STA. 225+98.77 TO STA. 225+98.77

F.A.P RTE.	SECTION	COUNTY	TOTAL SHEETS	SHEET NO.
317	(15B-1)BP,BRR; (14HB-1)BRR	PEO/TAZ	418	114

CONTRACT NO. 68E44

ILLINOIS | FED. AID PROJECT

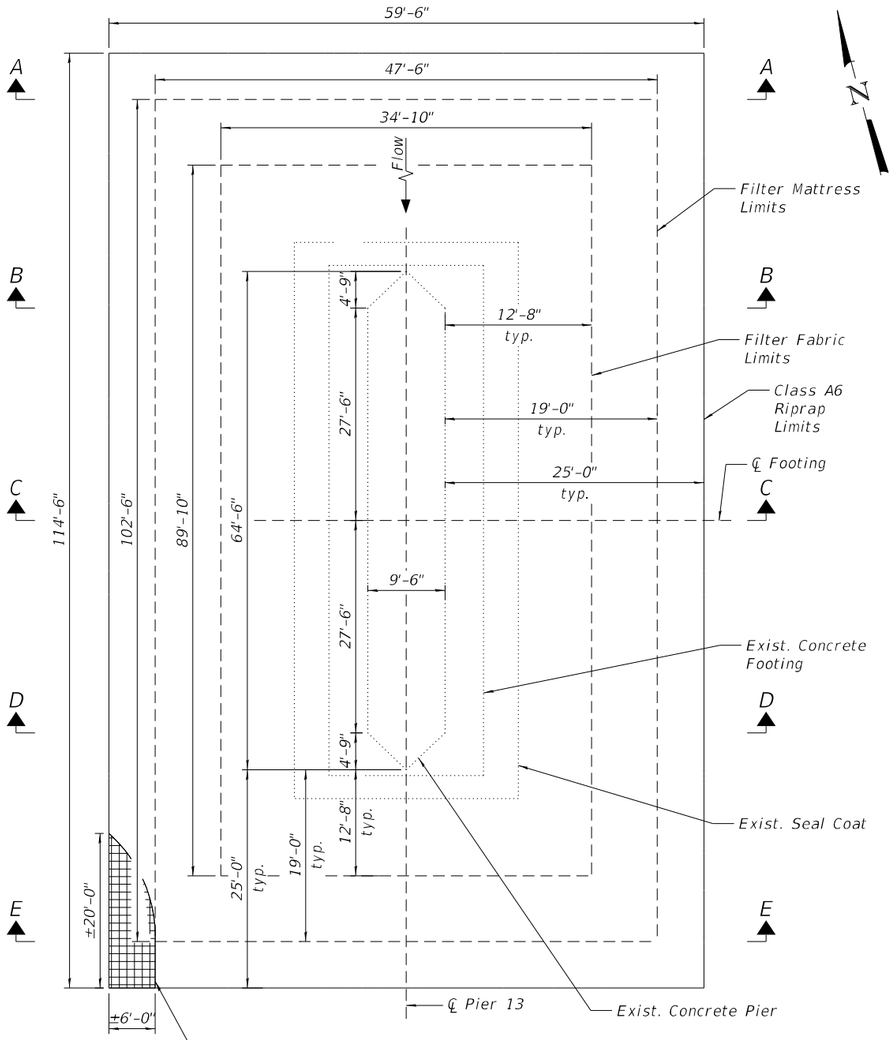

Riprap mat will overlap with remnants of previous EB bridge pier that was removed to a depth 2' below the streambed. Dump riprap directly on top of the remaining EB concrete pier. Reduce riprap thickness if needed with the approval of the Engineer.

PLAN VIEW

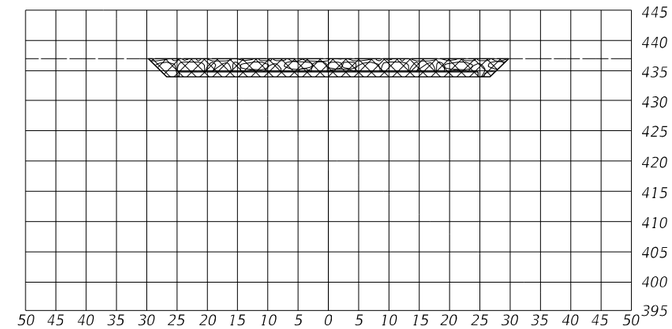

SECTION A-A

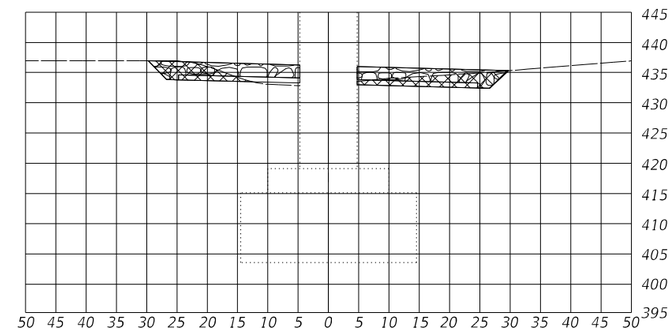

SECTION B-B

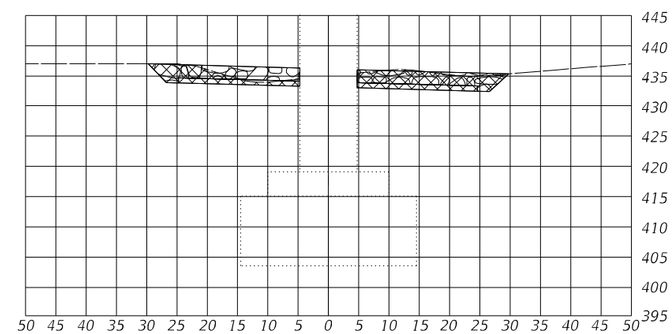

SECTION C-C

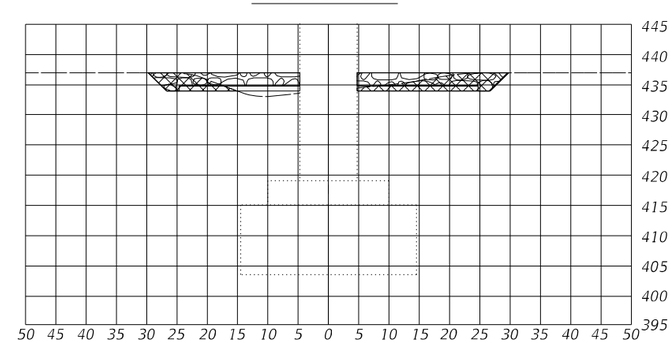

SECTION D-D

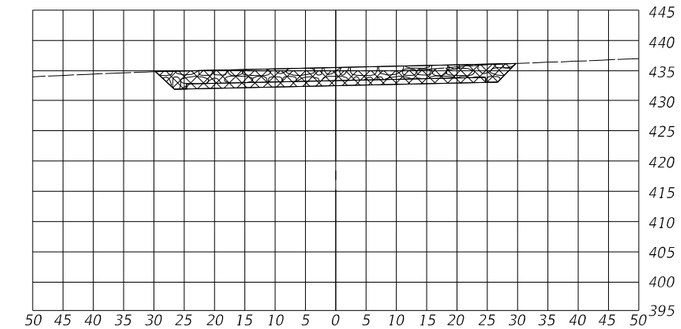

SECTION E-E

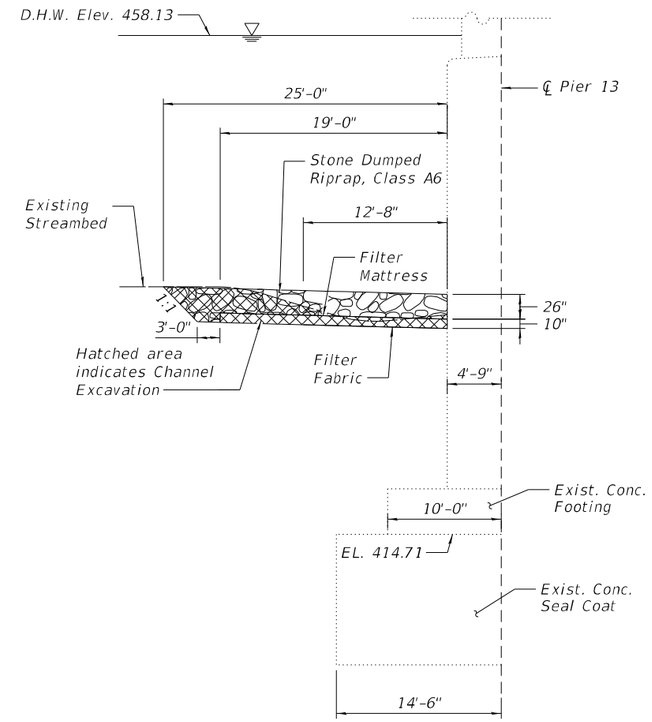

TYPICAL SECTION - PIER 13

Notes:
For filter mattress basket details, see sheet 110 of 406.
For notes, see sheet 110 of 406.

PIER 13
BILL OF MATERIAL

Item	Unit	Quantity
Channel Excavation	Cu. Yd.	496
Stone Dumped Riprap, Class A6	Ton	755
Stone Dumped Riprap, Class A1	Ton	12
Filter Mattress	Sq. Yd.	478

MODEL: Default
FILE NAME: P:\4312-WBMcCLugageRehab\CADD\Structural_Roadway (MM)\D468E44-sh-Scour2.dgn

MODJESKI and MASTERS

USER NAME = AECook	DESIGNED - SEC	REVISED -	
	DRAWN - ATH	REVISED -	
PLOT SCALE = 0.1667 ' / in.	CHECKED - YSS	REVISED -	
PLOT DATE = 1/20/2025	DATE - 1/20/2025	REVISED -	

STATE OF ILLINOIS
DEPARTMENT OF TRANSPORTATION

US 150 WESTBOUND McCLUGAGE BRIDGE PROJECT
SCOUR COUNTERMEASURES - 2

SCALE: N.T.S. | SHEET 2 OF 8 SHEETS | STA. 230+52.77 TO STA. 230+52.77

F.A.P RTE.	SECTION	COUNTY	TOTAL SHEETS	SHEET NO.
317	(15B-1)BP,BRR; (14HB-1)BRR	PEO/TAZ	418	115

CONTRACT NO. 68E44

ILLINOIS | FED. AID PROJECT

1/20/2025 7:32:53 AM

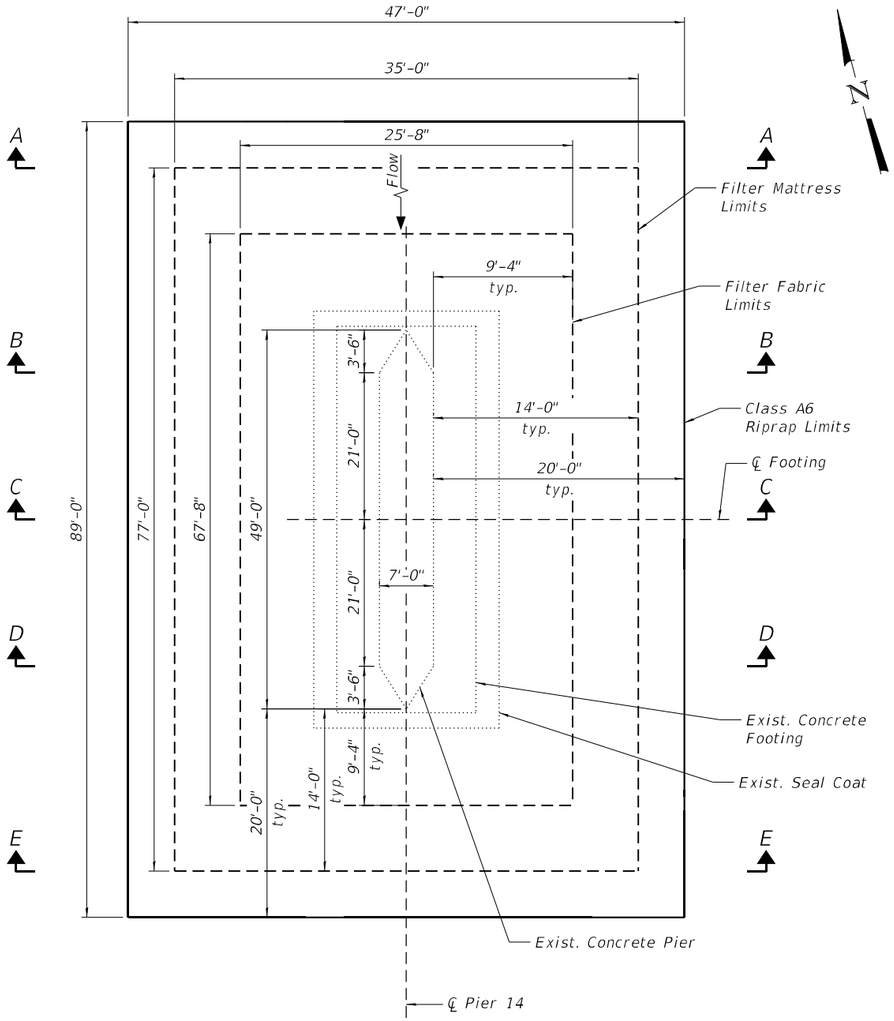

PLAN VIEW

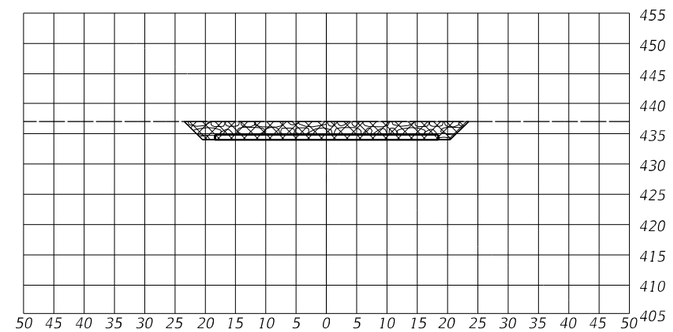

SECTION A-A

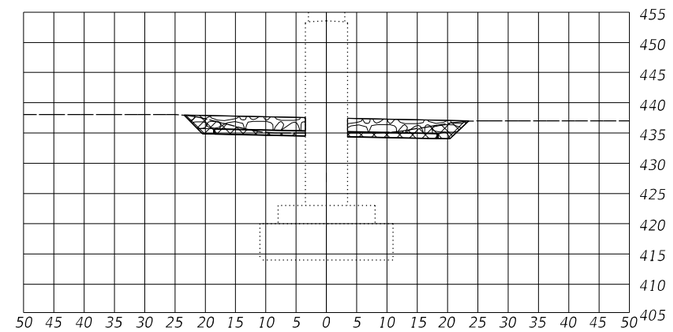

SECTION B-B

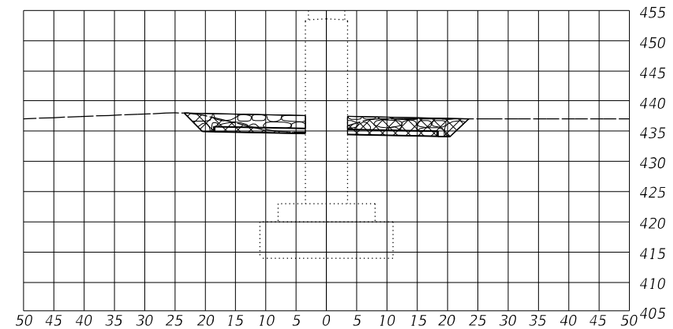

SECTION C-C

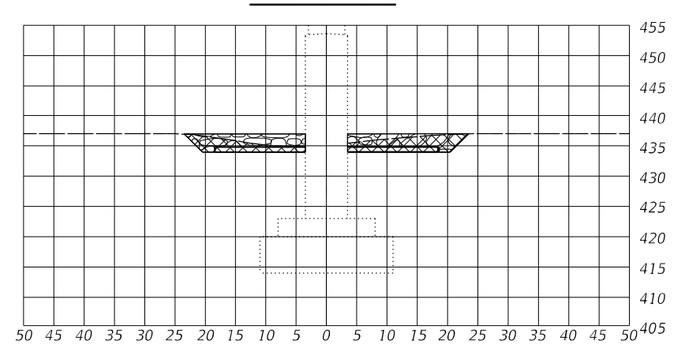

SECTION D-D

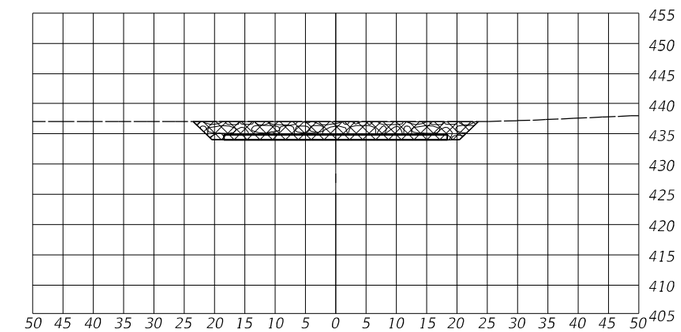

SECTION E-E

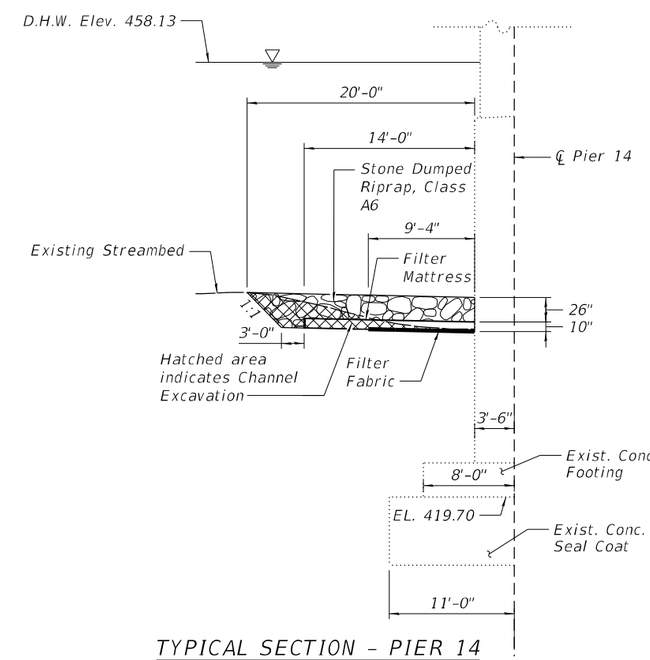

TYPICAL SECTION - PIER 14

Notes:
For filter mattress basket details, see sheet 114 of 406.
For notes, see sheet 114 of 406.

PIER 14
BILL OF MATERIAL

Item	Unit	Quantity
Channel Excavation	Cu. Yd.	312
Stone Dumped Riprap, Class A6	Ton	470
Filter Mattress	Sq. Yd.	265

MODEL: Default
FILE NAME: P:\4312-WBMcCLugageRehab\CADD\Structural_Roadway (MM)\D468E44-sht-Scour3.dgn

MODJESKI and MASTERS

USER NAME = AECook	DESIGNED - SEC	REVISED -	
	DRAWN - ATH	REVISED -	
PLOT SCALE = 0.1667 ' / in.	CHECKED - YSS	REVISED -	
PLOT DATE = 1/20/2025	DATE - 1/20/2025	REVISED -	

STATE OF ILLINOIS
DEPARTMENT OF TRANSPORTATION

US 150 WESTBOUND McCLUGAGE BRIDGE PROJECT
SCOUR COUNTERMEASURES - 3

SCALE: N.T.S. | SHEET 3 OF 8 SHEETS | STA. 232+15.60 TO STA. 232+15.60

F.A.P RTE.	SECTION	COUNTY	TOTAL SHEETS	SHEET NO.
317	(15B-1)BP,BRR; (14HB-1)BRR	PEO/TAZ	418	116
		CONTRACT NO. 68E44		
		ILLINOIS FED. AID PROJECT		

1/20/2025 7:32:57 AM

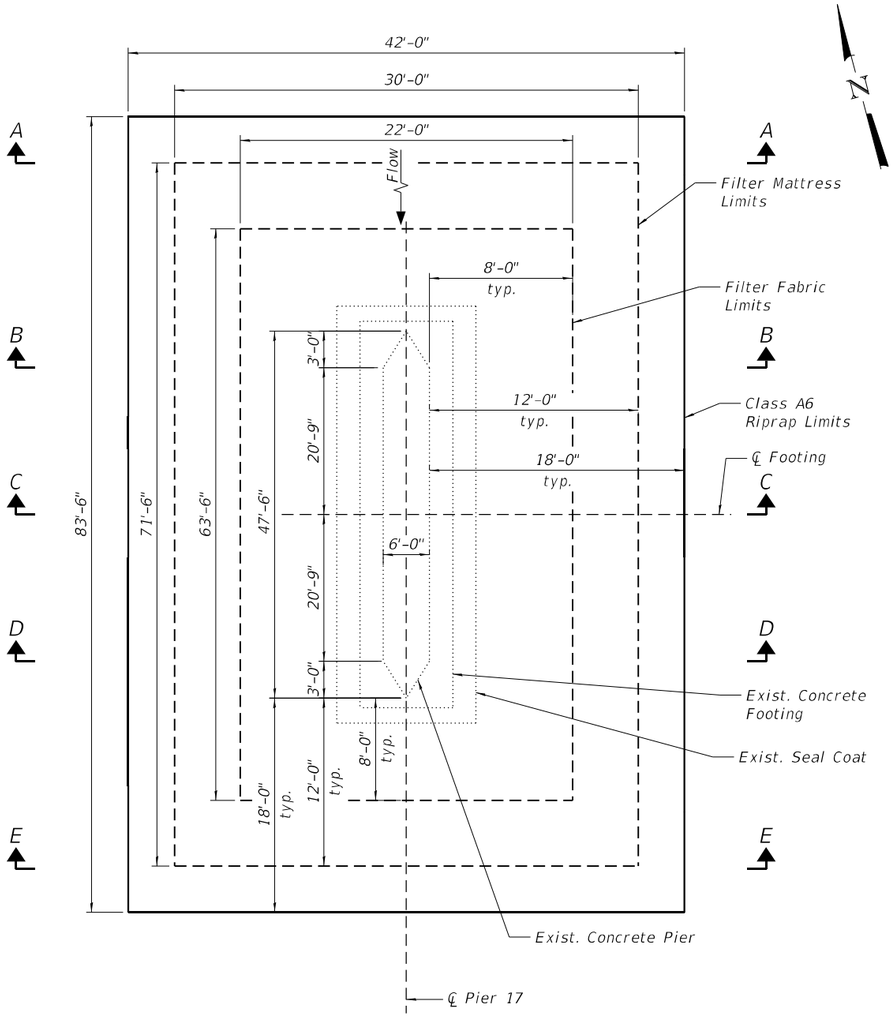

PLAN VIEW

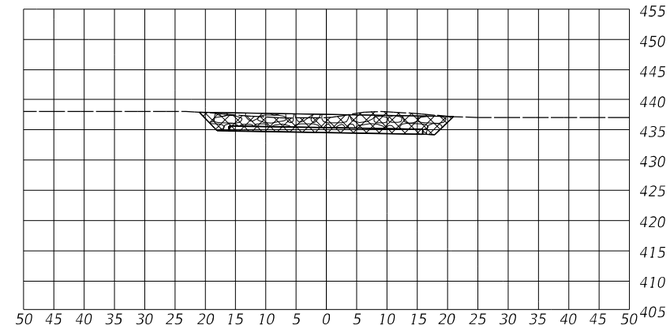

SECTION A-A

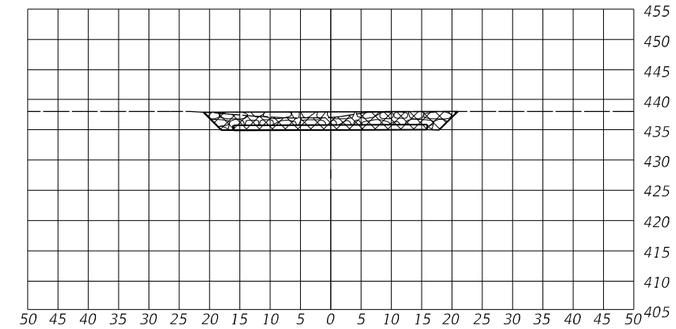

SECTION E-E

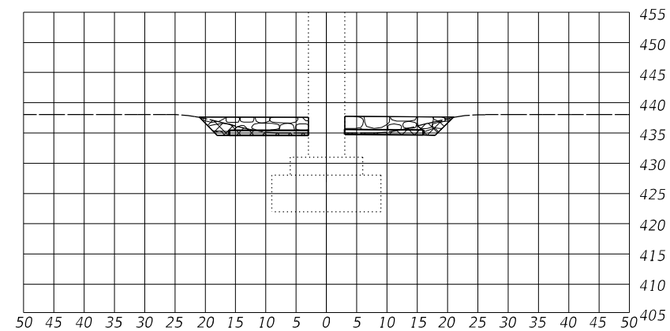

SECTION B-B

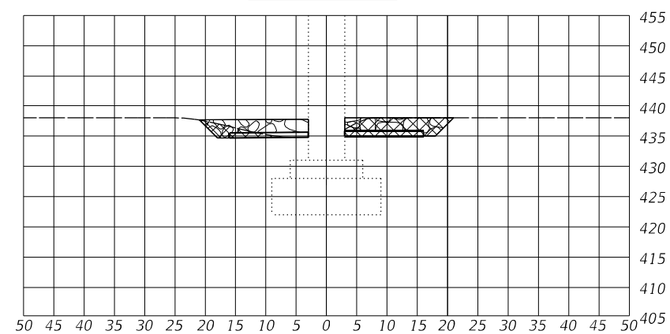

SECTION C-C

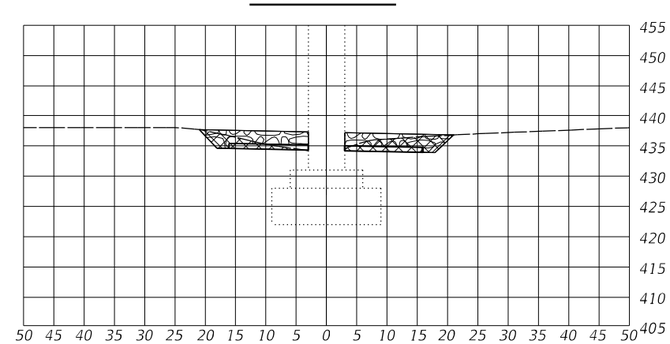

SECTION D-D

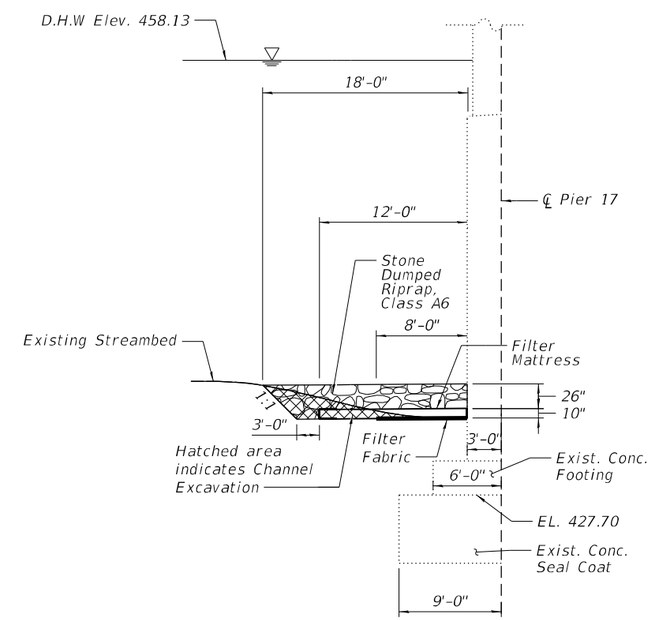

TYPICAL SECTION - PIER 17

Notes:
For filter mattress basket details, see sheet 114 of 406.
For notes, see sheet 114 of 406.

PIER 17
BILL OF MATERIAL

Item	Unit	Quantity
Channel Excavation	Cu. Yd.	229
Stone Dumped Riprap, Class A6	Ton	394
Stone Dumped Riprap, Class A1	Ton	1
Filter Mattress	Sq. Yd.	209

MODEL: Default
FILE NAME: P:\4312-WBMcCLugageRehab\CADD\Structural_Roadway (MM)\D468E44-sh-Scour4.dgn

MODJESKI and MASTERS

USER NAME = AECook	DESIGNED - SEC	REVISED -	
	DRAWN - ATH	REVISED -	
PLOT SCALE = 0.1667 ' / in.	CHECKED - YSS	REVISED -	
PLOT DATE = 1/20/2025	DATE - 1/20/2025	REVISED -	

STATE OF ILLINOIS
DEPARTMENT OF TRANSPORTATION

US 150 WESTBOUND McCLUGAGE BRIDGE PROJECT
SCOUR COUNTERMEASURES - 4

SCALE: N.T.S. | SHEET 4 OF 8 SHEETS | STA. 237+46.19 TO STA. 237+46.19

F.A.P RTE.	SECTION	COUNTY	TOTAL SHEETS	SHEET NO.
317	(15B-1)BP,BRR; (14HB-1)BRR	PEO/TAZ	418	117
		CONTRACT NO. 68E44		
		ILLINOIS FED. AID PROJECT		

1/20/2025 7:32:59 AM

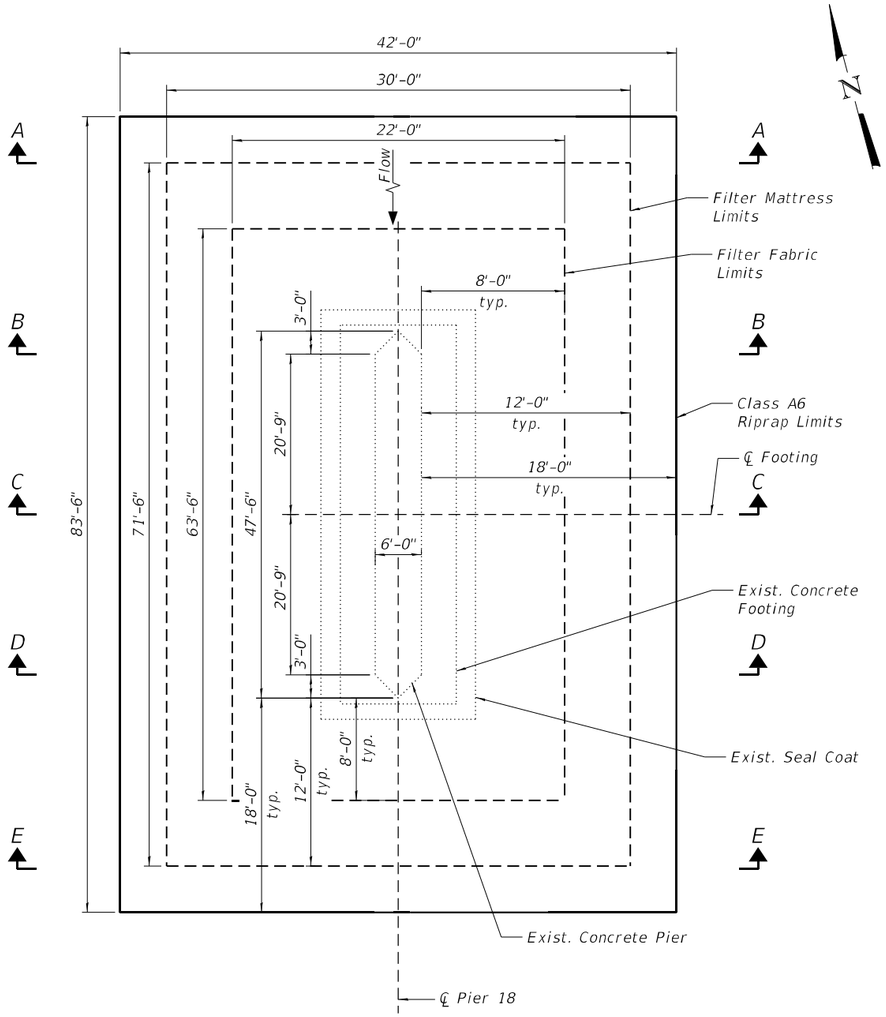

PLAN VIEW

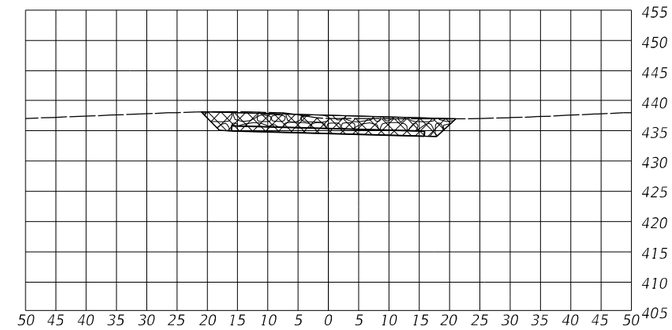

SECTION A-A

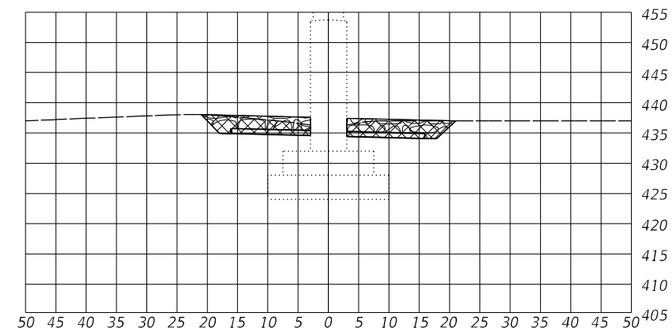

SECTION B-B

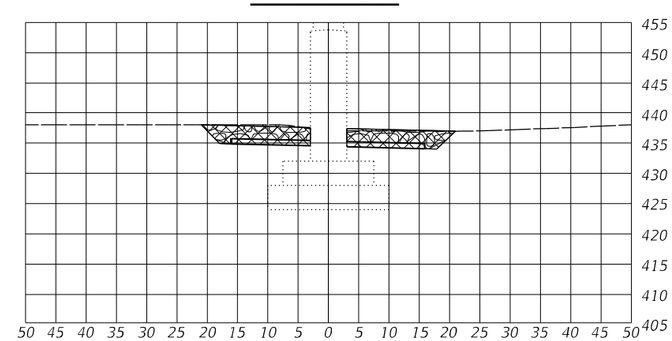

SECTION C-C

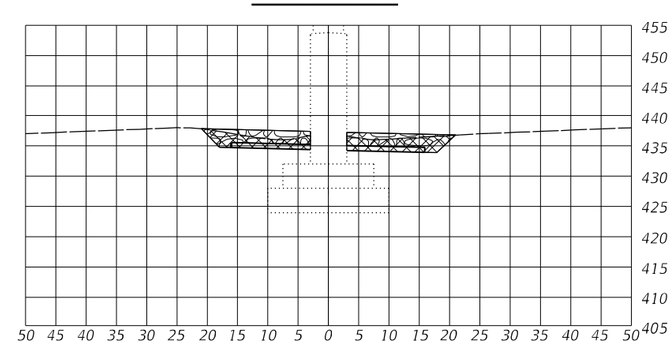

SECTION D-D

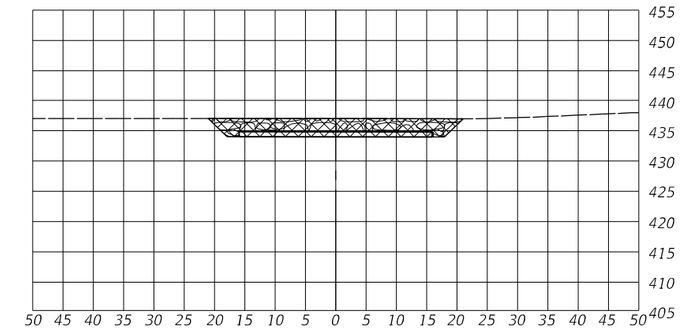

SECTION E-E

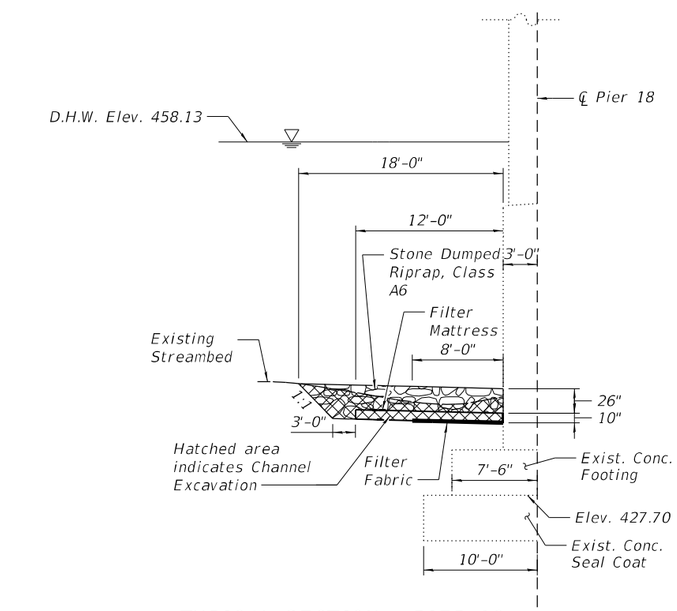

TYPICAL SECTION - PIER 18

Notes:
For filter mattress basket details, see sheet 114 of 406.
For notes, see sheet 114 of 406.

PIER 18
BILL OF MATERIAL

Item	Unit	Quantity
Channel Excavation	Cu. Yd.	302
Stone Dumped Riprap, Class A6	Ton	394
Filter Mattress	Sq. Yd.	209

MODEL: Default
FILE NAME: P:\4312-WBMcCLugageRehab\CADD\Structural_Roadway (MM)\D468E44-sht-Scour5.dgn

MODJESKI and MASTERS

USER NAME = AECook	DESIGNED - SEC	REVISED -	
	DRAWN - ATH	REVISED -	
PLOT SCALE = 0.1667 ' / in.	CHECKED - YSS	REVISED -	
PLOT DATE = 1/20/2025	DATE - 1/20/2025	REVISED -	

STATE OF ILLINOIS
DEPARTMENT OF TRANSPORTATION

US 150 WESTBOUND McCLUGAGE BRIDGE PROJECT
SCOUR COUNTERMEASURES - 5

SCALE: N.T.S. | SHEET 5 OF 8 SHEETS | STA. 239+52.27 TO STA. 239+52.27

F.A.P RTE.	SECTION	COUNTY	TOTAL SHEETS	SHEET NO.
317	(15B-1)BP,BRR; (14HB-1)BRR	PEO/TAZ	418	118
		CONTRACT NO. 68E44		
		ILLINOIS FED. AID PROJECT		

1/20/2025 7:33:07 AM

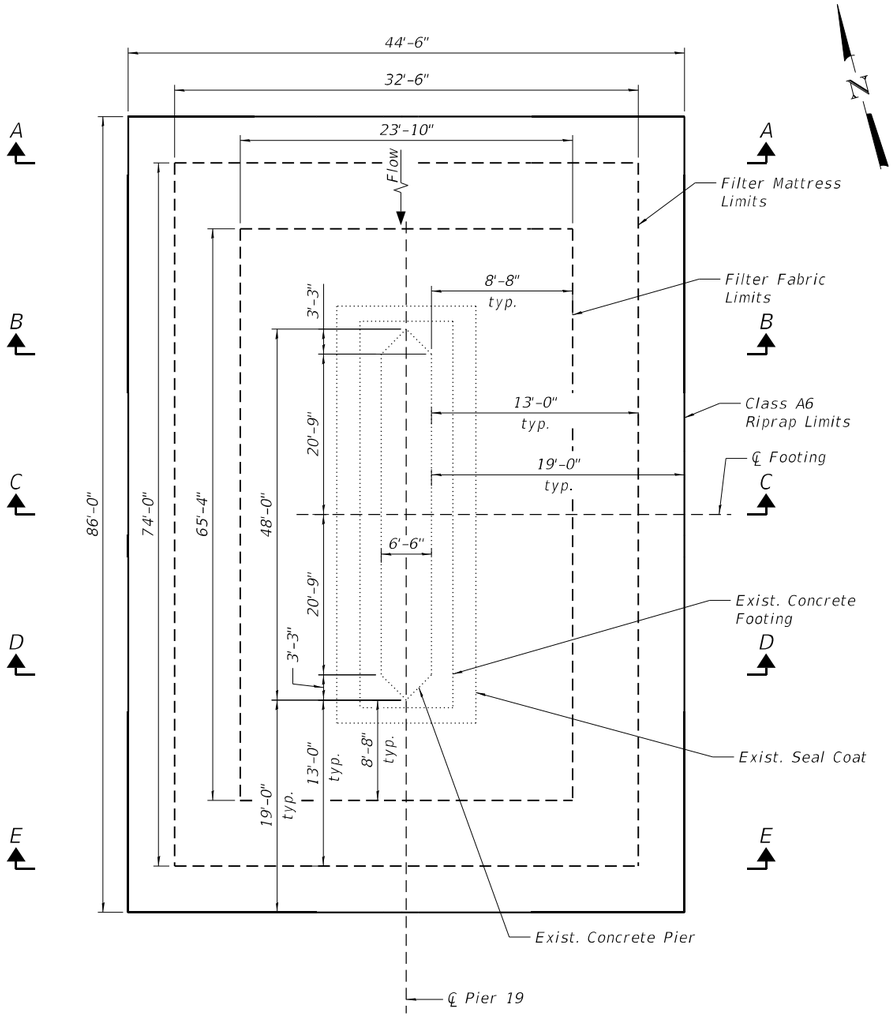

PLAN VIEW

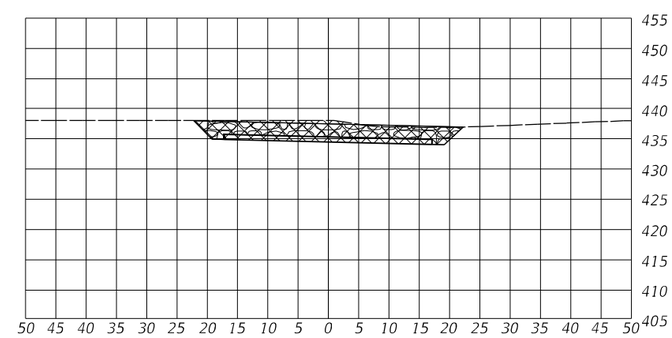

SECTION A-A

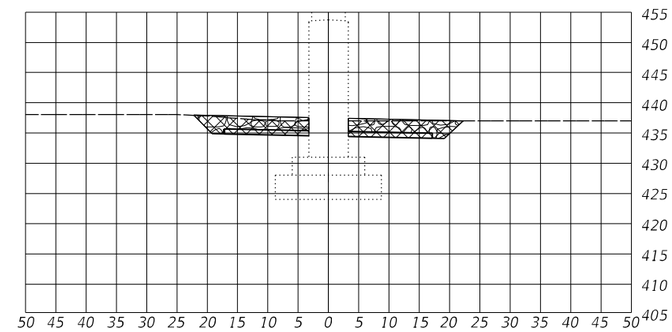

SECTION B-B

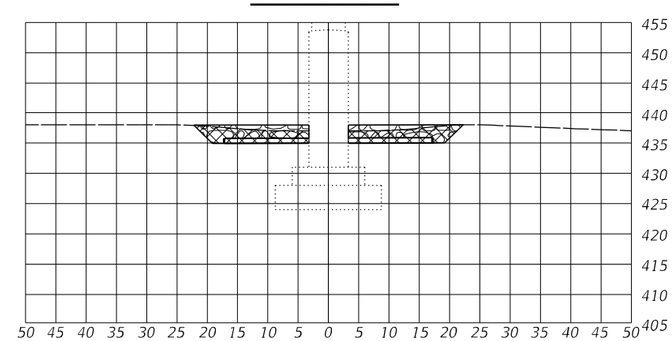

SECTION C-C

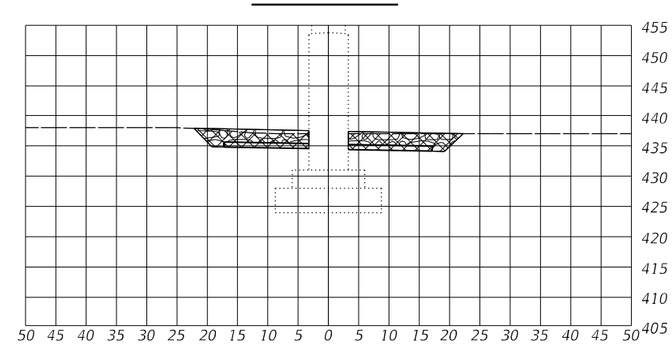

SECTION D-D

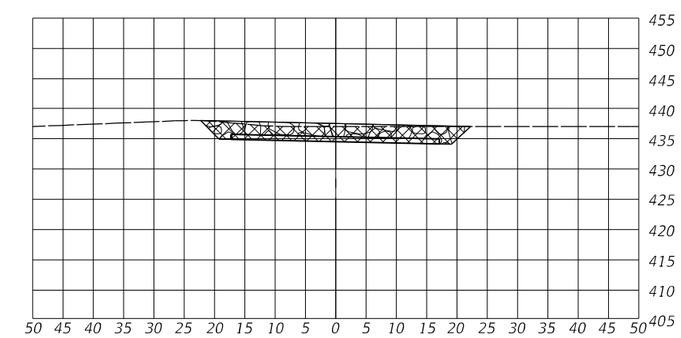

SECTION E-E

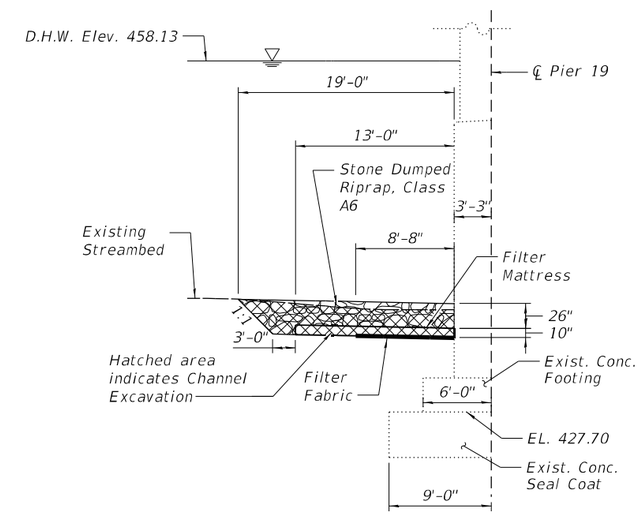

TYPICAL SECTION - PIER 19

Notes:
For filter mattress basket details, see sheet 110 of 406.
For notes, see sheet 110 of 406.

PIER 19
BILL OF MATERIAL

Item	Unit	Quantity
Channel Excavation	Cu. Yd.	325
Stone Dumped Riprap, Class A6	Ton	430
Filter Mattress	Sq. Yd.	235

MODEL: Default
FILE NAME: P:\4312-VBM\cCLugageRehab\CADD\Structural_Roadway (MM)\D468E44-sh-Scour6.dgn
1/20/2025 7:33:14 AM

MODJESKI and MASTERS

USER NAME = AECook	DESIGNED - SEC	REVISED -	
	DRAWN - ATH	REVISED -	
PLOT SCALE = 0.1667 ' / in.	CHECKED - YSS	REVISED -	
PLOT DATE = 1/20/2025	DATE - 1/20/2025	REVISED -	

STATE OF ILLINOIS
DEPARTMENT OF TRANSPORTATION

US 150 WESTBOUND McCLUGAGE BRIDGE PROJECT
SCOUR COUNTERMEASURES - 6

SCALE: N.T.S. | SHEET 6 OF 8 SHEETS | STA. 241+14.52 | TO STA. 241+14.52

F.A.P RTE.	SECTION	COUNTY	TOTAL SHEETS	SHEET NO.
317	(15B-1)BP,BRR; (14HB-1)BRR	PEO/TAZ	418	119
		CONTRACT NO. 68E44		
		ILLINOIS	FED. AID PROJECT	

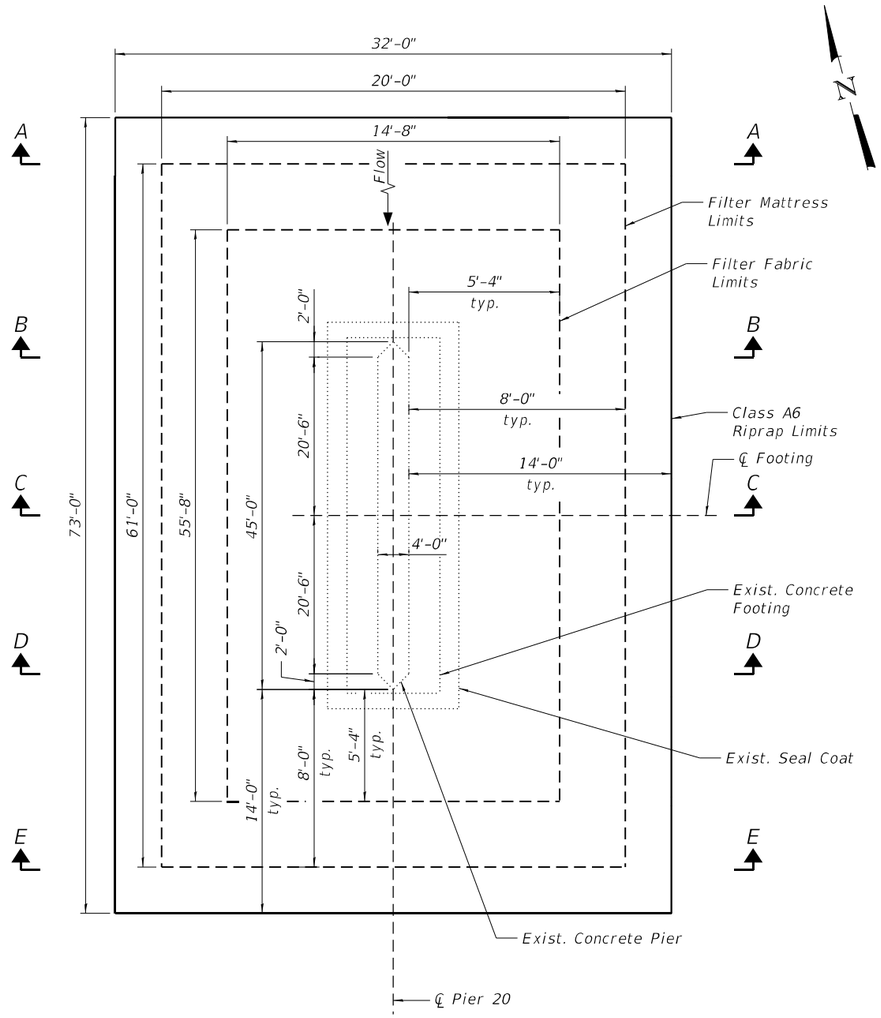

PLAN VIEW

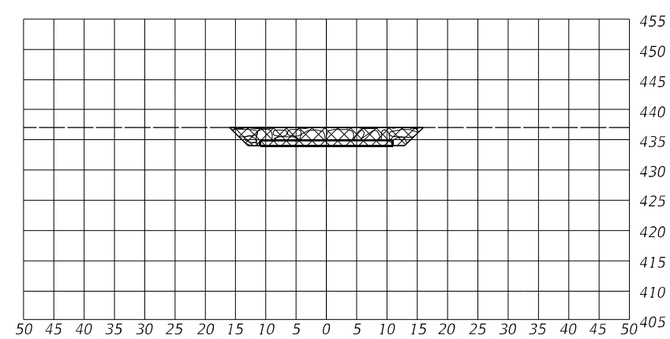

SECTION A-A

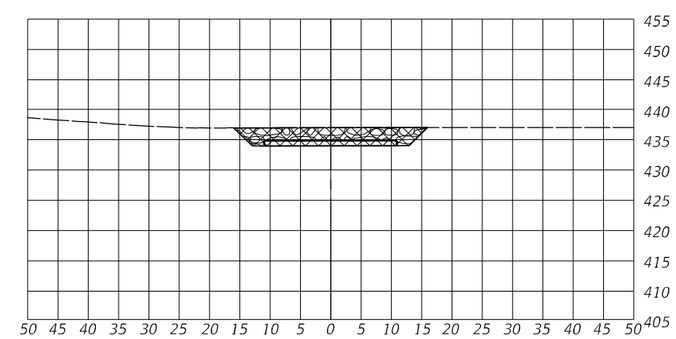

SECTION E-E

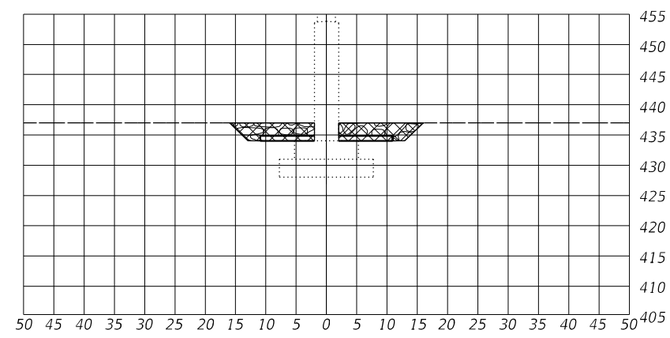

SECTION B-B

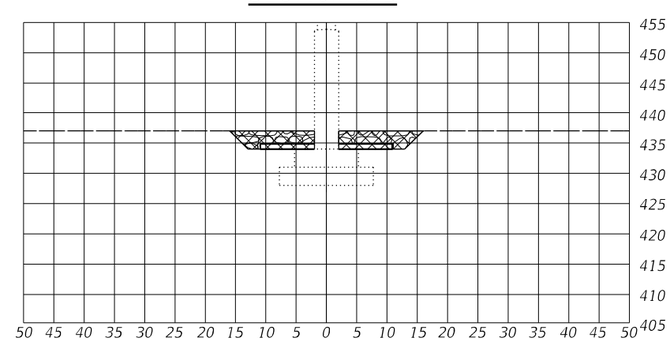

SECTION C-C

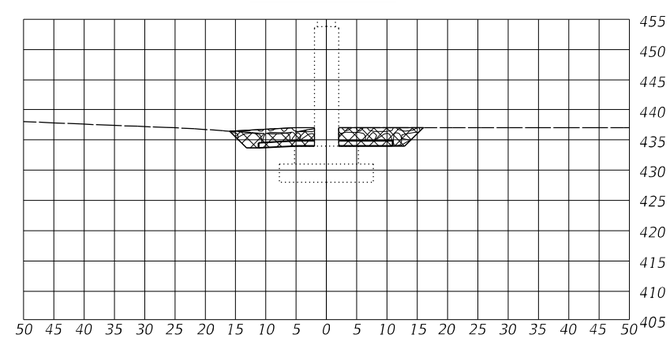

SECTION D-D

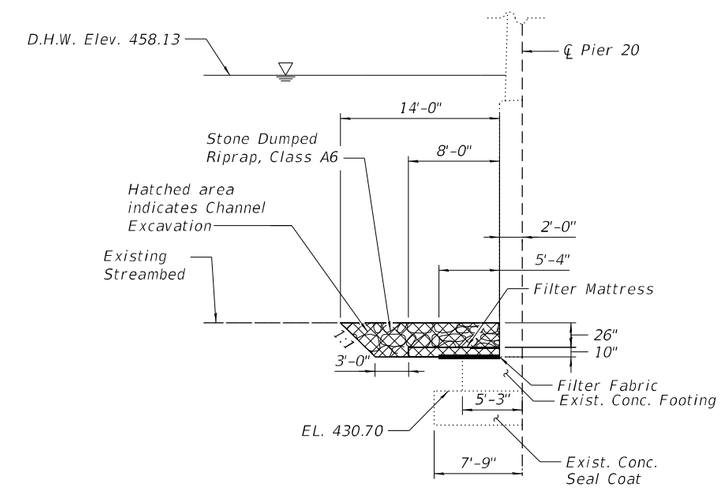

TYPICAL SECTION - PIER 20

Notes:
For filter mattress basket details, see sheet 110 of 406.
For notes, see sheet 110 of 406.

PIER 20
BILL OF MATERIAL

Item	Unit	Quantity
Channel Excavation	Cu. Yd.	211
Stone Dumped Riprap, Class A6	Ton	263
Filter Mattress	Sq. Yd.	117

MODJESKI and MASTERS

USER NAME = AECook	DESIGNED - SEC	REVISED -	
	DRAWN - ATH	REVISED -	
PLOT SCALE = 0.1667 ' / in.	CHECKED - YSS	REVISED -	
PLOT DATE = 1/20/2025	DATE - 1/20/2025	REVISED -	

STATE OF ILLINOIS
DEPARTMENT OF TRANSPORTATION

US 150 WESTBOUND McCLUGAGE BRIDGE PROJECT
SCOUR COUNTERMEASURES - 7

SCALE: N.T.S. | SHEET 7 OF 8 SHEETS | STA. 242+76.77 TO STA. 242+76.77

F.A.P RTE.	SECTION	COUNTY	TOTAL SHEETS	SHEET NO.
317	(15B-1)BP,BRR; (14HB-1)BRR	PEO/TAZ	418	120
		CONTRACT NO. 68E44		
		ILLINOIS FED. AID PROJECT		

MODEL: Default
FILE NAME: P:\4312-VBM\cCLugageRehab\CADD\Structural_Roadway (MM)\D468E44-sh-Scour7.dgn
1/20/2025 7:33:22 AM

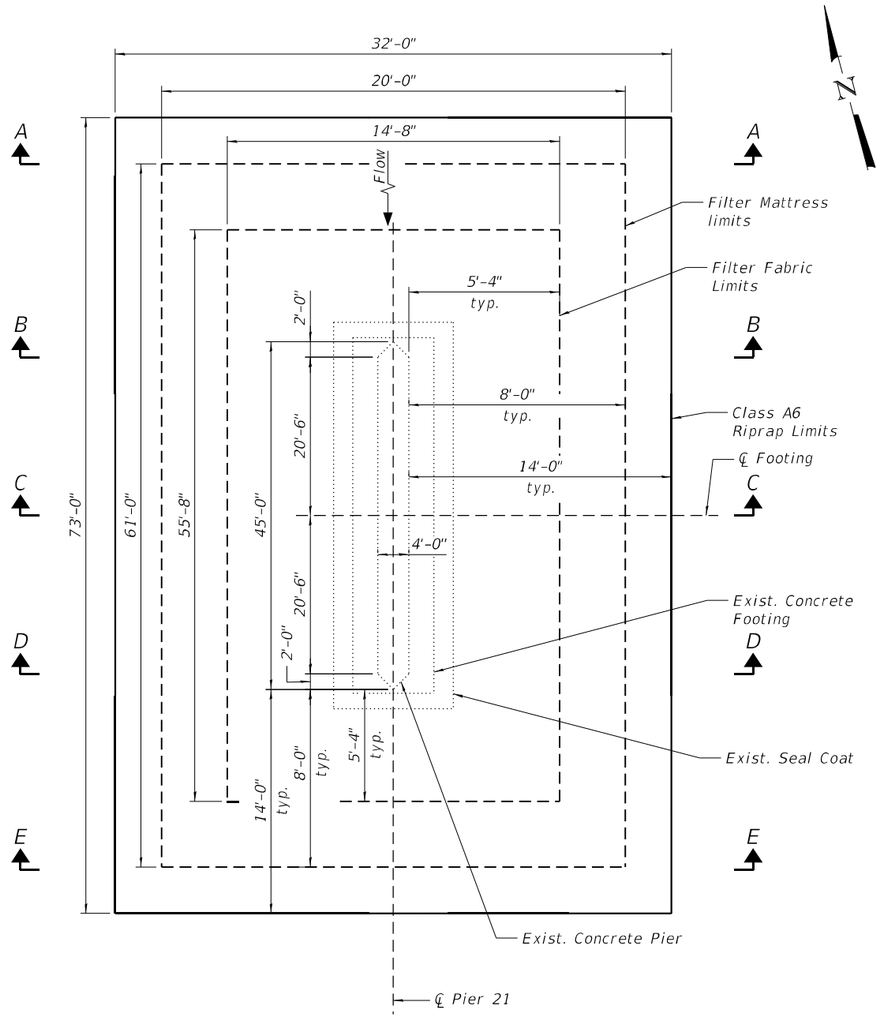

PLAN VIEW

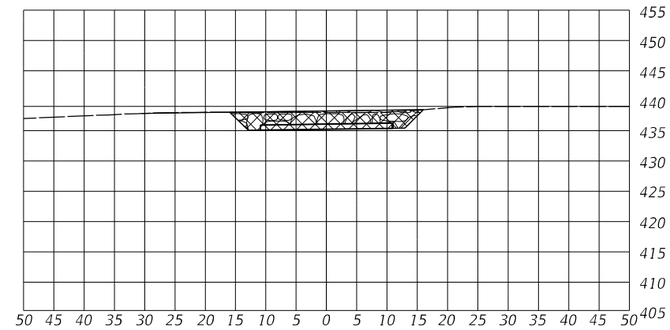

SECTION A-A

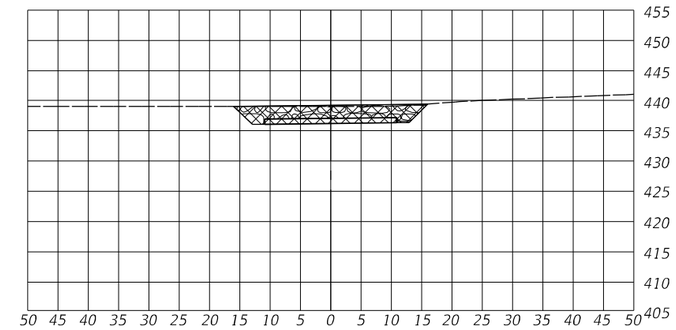

SECTION E-E

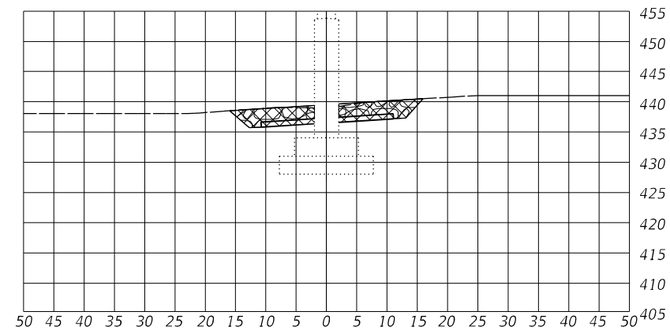

SECTION B-B

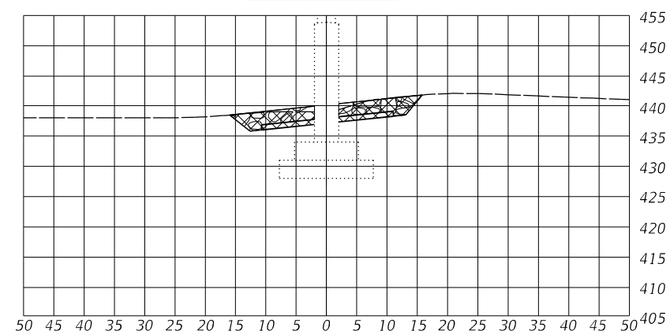

SECTION C-C

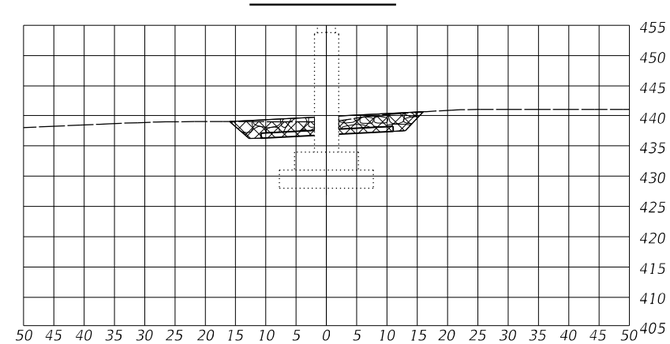

SECTION D-D

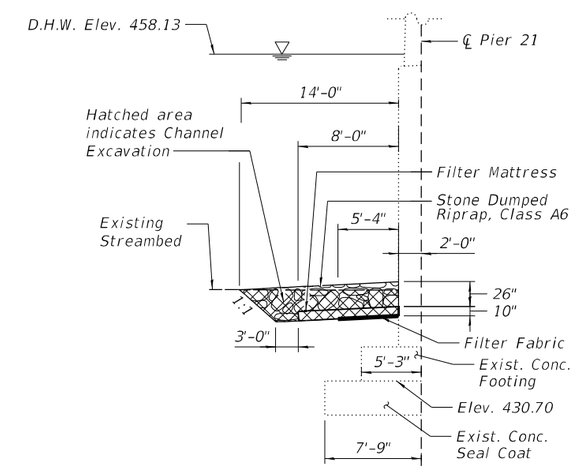

TYPICAL SECTION - PIER 21

Notes:
For filter mattress basket details, see sheet 110 of 406.
For notes, see sheet 110 of 406.

PIER 21
BILL OF MATERIAL

Item	Unit	Quantity
Channel Excavation	Cu. Yd.	200
Stone Dumped Riprap, Class A6	Ton	263
Filter Mattress	Sq. Yd.	117

MODEL: Default
FILE NAME: P:\4312-VBM\cCLugageRehab\CADD\Structural_Roadway (MM)\D468E44-sh-Scour8.dgn

1/20/2025 7:33:27 AM

MODJESKI and MASTERS

USER NAME = AECook	DESIGNED - SEC	REVISED -	
	DRAWN - ATH	REVISED -	
PLOT SCALE = 0.1667 ' / in.	CHECKED - YSS	REVISED -	
PLOT DATE = 1/20/2025	DATE - 1/20/2025	REVISED -	

STATE OF ILLINOIS
DEPARTMENT OF TRANSPORTATION

US 150 WESTBOUND McCLUGAGE BRIDGE PROJECT
SCOUR COUNTERMEASURES - 8

SCALE: N.T.S. | SHEET 8 OF 8 SHEETS | STA. 244+82.85 TO STA. 244+82.85

F.A.P RTE.	SECTION	COUNTY	TOTAL SHEETS	SHEET NO.
317	(15B-1)BP,BRR; (14HB-1)BRR	PEO/TAZ	418	121
		CONTRACT NO. 68E44		
		ILLINOIS	FED. AID PROJECT	

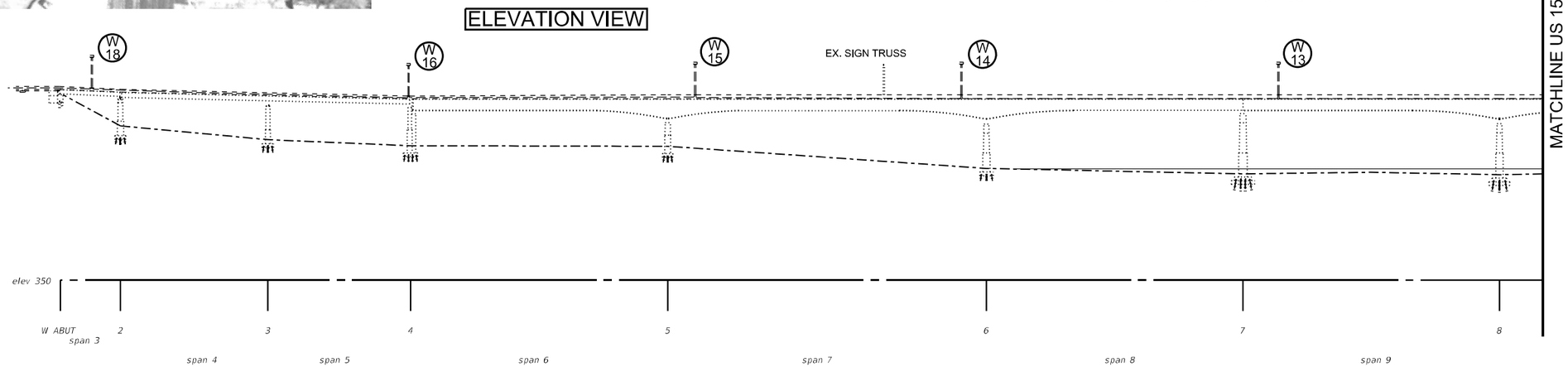

NOTES:

1. THE CONTRACTOR SHALL LEAVE THE EXISTING CONDUIT IN PLACE BETWEEN LIGHT POLE W18 AND LIGHTING CONTROLLER "B" FOR FUTURE USE, IF NEEDED.

REMOVE EXISTING LIGHTING SYSTEM - QTY. 1.0 LUMP SUM	
(INCLUDES ALL ITEMS LISTED BELOW FROM STA. 196+00 TO STA. 257+30)	
THE FOLLOWING ITEMS SHALL BE REMOVED AND DISPOSED OF BY THE CONTRACTOR OFF OF THE RIGHT-OF-WAY:	
QTY.	ITEM
4.0	NAVIGATION LUMINAIRE 360 DEGREE GREEN & REFLECTOR
4.0	NAVIGATION LUMINAIRE 180 DEGREE RED & REFLECTOR
3.0	LIGHT POLE, ALUMINUM, 50 FT. M.H.
3.0	LIGHT POLE FOUNDATION
ALL	ELECTRICAL CABLE IN CONDUIT
ALL	CONDUIT, JUNCTION BOXES, ATTACHMENT BRACKETS NOT USED IN PROPOSED LIGHTING PLANS
THE FOLLOWING ITEMS SHALL BE REMOVED AND DELIVERED TO IDOT PEORIA WEST MAINTENANCE FACILITY AT 6500	
QTY.	ITEM
14.0	LIGHT POLE, GALVANIZED STEEL, 45 FT. M.H.
24.0	LED LUMINAIRE

BILL OF MATERIALS		
ITEM DESCRIPTION	UNIT	QTY.
REMOVE EXISTING LIGHTING SYSTEM	L SUM	1.0

NOT TO SCALE

USER NAME = trevor.hanson	DESIGNED -	REVISED -	
	DRAWN -	REVISED -	
PLOT SCALE = 101.58 ' / in.	CHECKED -	REVISED -	
PLOT DATE = 3/13/2025	DATE -	REVISED -	

STATE OF ILLINOIS
DEPARTMENT OF TRANSPORTATION

EXISTING LIGHTING REMOVAL ITEMS
US 150 WB MCCLUGAGE BRIDGE

SCALE: SHEET OF SHEETS STA. TO STA.

F.A.P. RTE.	SECTION	COUNTY	TOTAL SHEETS	SHEET NO.
317	(15B-1)BP,BRR; (14HB-1)BRR	PEO/TAZ	406	122
		CONTRACT NO. 68E44		
		ILLINOIS	FED. AID PROJECT	

MODEL: Default
FILE NAME: C:\Users\Trevor.Hanson\OneDrive - State of Illinois - Dept. of Innovation & Technology\68E44 WB McClugage Lighting\3468E44-LightingDesign.dgn

PLAN VIEW

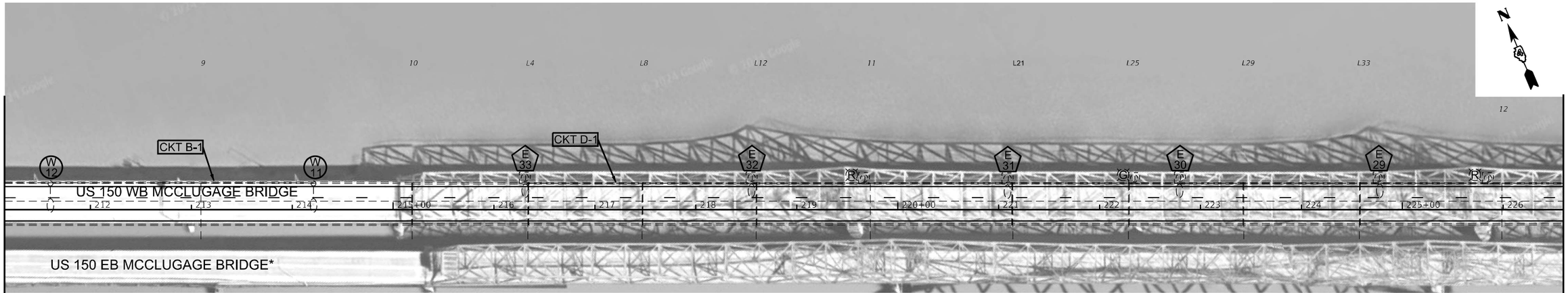

* US 150 EB MCCLUGAGE BRIDGE REPLACEMENT,
SEE IDOT CONTRACT 68B46

MATCHLINE US 150 STA. 211+15.00

MATCHLINE US 150 STA. 226+59.00

ELEVATION VIEW

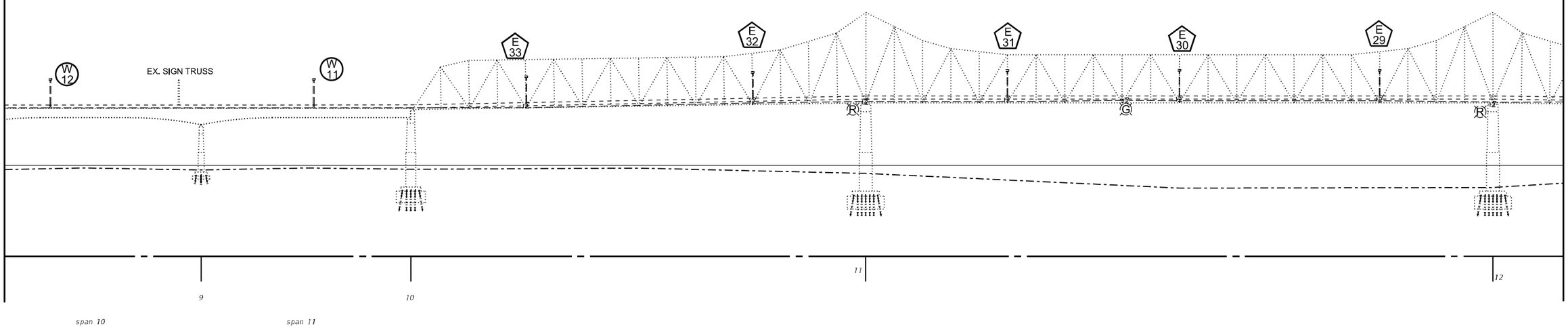

NOT TO SCALE

USER NAME = trevor.hanson	DESIGNED -	REVISED -	
	DRAWN -	REVISED -	
PLOT SCALE = 101.58 ' / in.	CHECKED -	REVISED -	
PLOT DATE = 3/13/2025	DATE -	REVISED -	

STATE OF ILLINOIS
DEPARTMENT OF TRANSPORTATION

EXISTING LIGHTING REMOVAL ITEMS
US 150 WB MCCLUGAGE BRIDGE – CONTINUED

SCALE: | SHEET OF SHEETS | STA. TO STA.

F.A.P. RTE.	SECTION	COUNTY	TOTAL SHEETS	SHEET NO.
317	(15B-1)BP,BRR; (14HB-1)BRR	PEO/TAZ	406	123

CONTRACT NO. 68E44

ILLINOIS | FED. AID PROJECT

MODEL: Default
FILE NAME: C:\Users\Trevor.Hanson\OneDrive - State of Illinois - Dept. of Innovation & Technology\68E44 WB McCluagge Lighting\D468E44-LightingDesign.dgn

PLAN VIEW

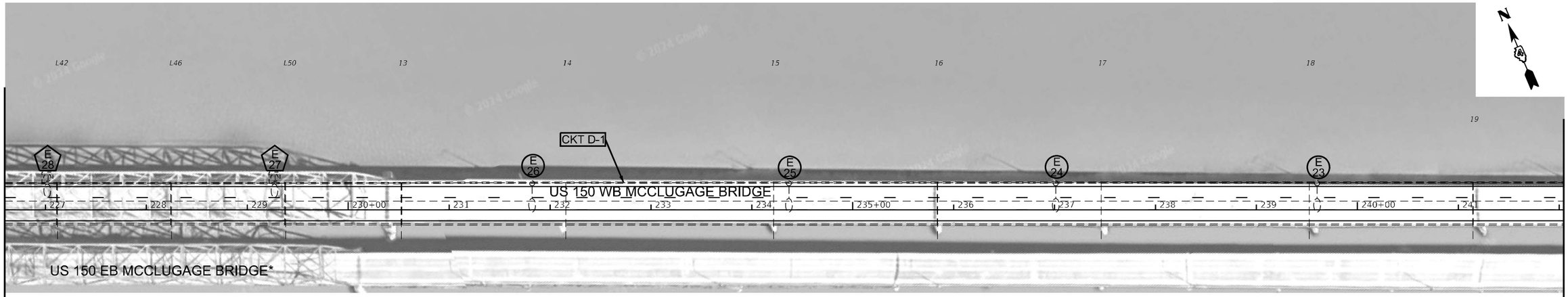

* US 150 EB MCCLUGAGE BRIDGE REPLACEMENT,
SEE IDOT CONTRACT 68B46

MATCHLINE US 150 STA. 226+59.00

MATCHLINE US 150 STA. 242+05.00

ELEVATION VIEW

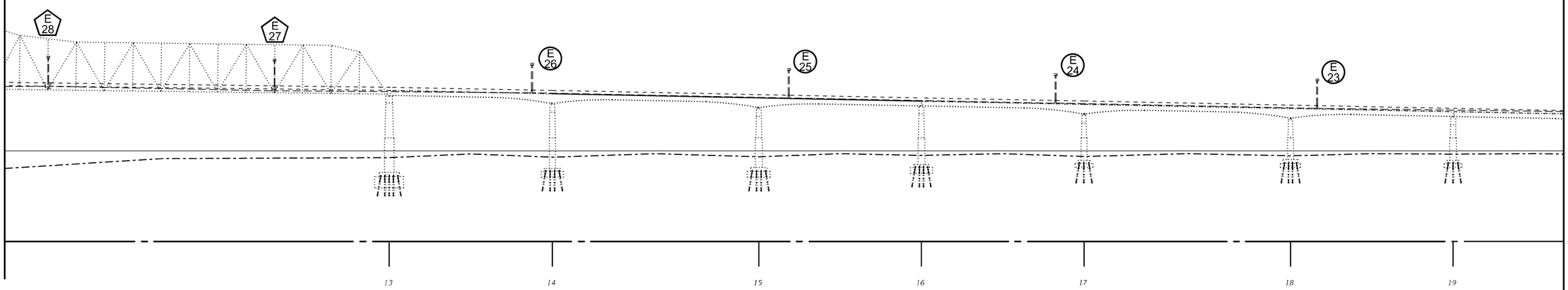

NOT TO SCALE

USER NAME = trevor.hanson	DESIGNED -	REVISED -	
	DRAWN -	REVISED -	
PLOT SCALE = 101.58 ' / in.	CHECKED -	REVISED -	
PLOT DATE = 3/13/2025	DATE -	REVISED -	

STATE OF ILLINOIS
DEPARTMENT OF TRANSPORTATION

EXISTING LIGHTING REMOVAL ITEMS
US 150 WB MCCLUGAGE BRIDGE – CONTINUED

SCALE: | SHEET OF SHEETS | STA. TO STA.

F.A.P. RTE.	SECTION	COUNTY	TOTAL SHEETS	SHEET NO.
317	(15B-1)BP,BRR; (14HB-1)BRR	PEO/TAZ	406	124
		CONTRACT NO. 68E44		
	ILLINOIS	FED. AID PROJECT		

MODEL: Default
FILE NAME: C:\Users\Trevor.Hanson\OneDrive - State of Illinois - Dept. of Innovation & Technology\68E44 WB McClugage Lighting\D468E44-Lighting Design.dgn

PLAN VIEW

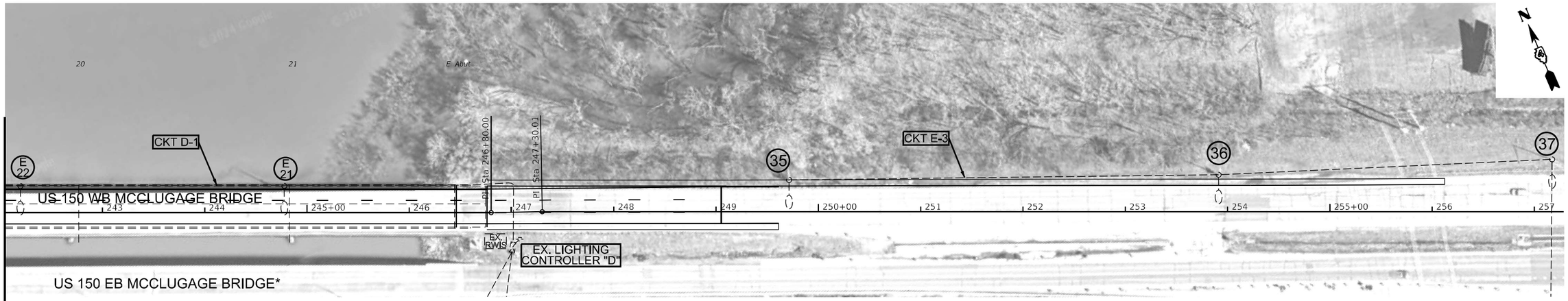

* US 150 EB MCCLUGAGE BRIDGE REPLACEMENT, SEE IDOT CONTRACT 68B46

NOTES:
1. THE CONTRACTOR SHALL MODIFY THE EXISTING LIGHTING CONTROLLER "D" TO ADD THE PROPOSED CIRCUITS 4 & 5.

ELEVATION VIEW

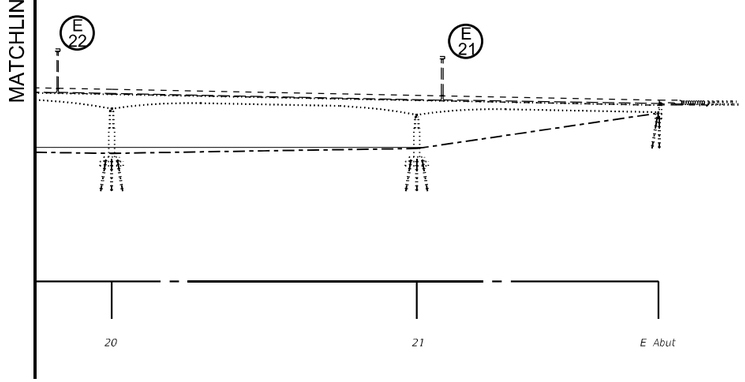

NOT TO SCALE

MODEL: Default
FILE NAME: C:\Users\Trevor.Hanson\OneDrive - State of Illinois - Dept. of Innovation & Technology\68E44 WB McClugage Lighting\D468E44-lightingDesign.dgn

USER NAME = trevor.hanson	DESIGNED -	REVISED -	
	DRAWN -	REVISED -	
PLOT SCALE = 101.58 ' / in.	CHECKED -	REVISED -	
PLOT DATE = 3/13/2025	DATE -	REVISED -	

STATE OF ILLINOIS
DEPARTMENT OF TRANSPORTATION

EXISTING LIGHTING REMOVAL ITEMS
US 150 WB MCCLUGAGE BRIDGE – CONTINUED

SCALE: | SHEET OF SHEETS | STA. TO STA.

F.A.P. RTE.	SECTION	COUNTY	TOTAL SHEETS	SHEET NO.
317	(15B-1)BP,BRR: (14HB-1)BRR	PEO/TAZ	406	125
		CONTRACT NO. 68E44		
		ILLINOIS	FED. AID PROJECT	

LOAD TABLE			
LIGHTING CONTROLLER "B"			
480/240V, 100AMP			
CIRCUIT	BREAKER	RED	BLACK
		AMPS	AMPS
1	20-1P	4.2	
	20-1P		2.5
2	20-1P	3.3	
	20-1P		5.0
	TOTAL:	7.5 AMPS	
		@480V	

FOR INFORMATION ONLY

LEGEND:

- EXISTING CIRCUIT WIRING
- PROPOSED CIRCUIT WIRING
- # EXISTING OR SALVAGED ROADWAY LUMINAIRE
- # PROPOSED ROADWAY LUMINAIRE
- # PROPOSED PARK LUMINAIRE
- # PROPOSED MAINTENANCE LUMINAIRE
- PROPOSED WATERWAY OBSTRUCTION WARNING LUMINAIRE, GREEN CHANNEL CENTER
- PROPOSED WATERWAY OBSTRUCTION WARNING LUMINAIRE, RED CHANNEL MARGIN
- PROPOSED GFCI 20AMP DUPLEX RECEPTACLE
- U-3 EXISTING UNDERPASS LUMINAIRE
- U-1 PROPOSED UNDERPASS LUMINAIRE

ALL ROADWAY LUMINAIRES ARE TO BE WIRED 240V TO NEUTRAL

ROADWAY LIGHTING CONDUCTORS ARE TO BE INSTALLED IN CONDUIT#1 (NORTH SIDE OF PARAPET)

ARCH LIGHTING AND RECEPTACLE CONDUCTORS ARE TO BE INSTALLED IN CONDUIT#2 (NORTH SIDE OF PARAPET)

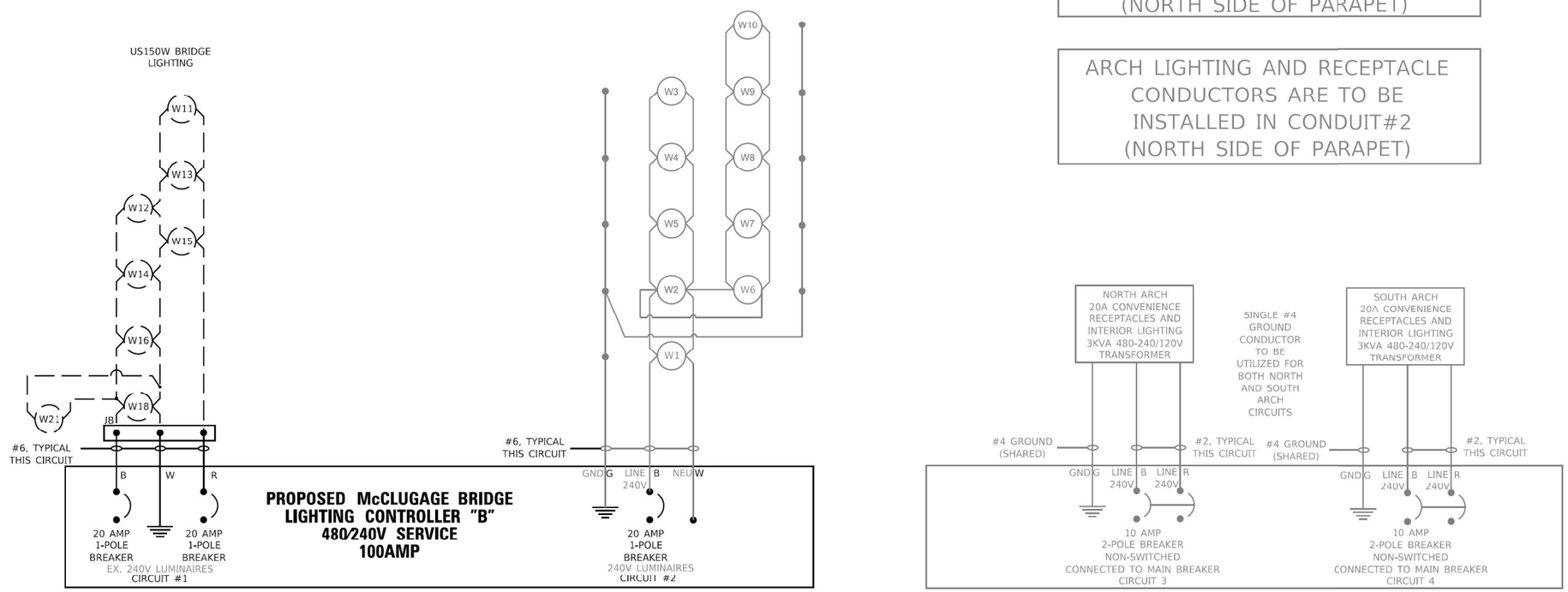

WEST McCLUGAGE BRIDGE PROPOSED WIRING DIAGRAM

NOTE:
EXISTING CIRCUITING TO REMAIN IS BASED ON AS-BUILT INFORMATION. SEE EXISTING WIRING DIAGRAM ON SHEET LTG-18 FOR REFERENCE.

FINAL SUBMITTAL

MODEL: Default
FILE NAME: Q:\common\GENTransfer - bureau\68846 - McClugage Bridge TIS Plans (Final 11-16-18)\Revised Lighting Plan Sheets\68846 - Sheet 631 (Lighting Sheet 10) (2-2-2-21).dgn

LTG-19

TYLIN INTERNATIONAL 200 S. WACKER DR. SUITE 1400 CHICAGO, IL 60606 TEL: 312-777-2600	USER NAME = howalder	DESIGNED - SF	REVISED -
		DRAWN - SF	REVISED -
	PLOT SCALE = 100.00 ' / in.	CHECKED -	REVISED -
	PLOT DATE = 5/12/2021	DATE - 11/28/2018	REVISED -

STATE OF ILLINOIS
DEPARTMENT OF TRANSPORTATION

US 150 EASTBOUND McCLUGAGE BRIDGE PROJECT
PROPOSED LIGHTING CONTROLLER CIRCUIT DIAGRAMS

SCALE: NONE | SHEET 2 OF 5 SHEETS | STA. N/A TO STA. N/A

F.A.P RTE.	SECTION	COUNTY	TOTAL SHEETS	SHEET NO.
317	(15B;[(102-1),(14HB)]BR)BR	PEORIA	1361	631R
		CONTRACT NO. 68B46		
	ILLINOIS FED. AID PROJECT NHPP-YRP3(905)			

MODEL: Default
FILE NAME: C:\Users\Trevor.Hanson\OneDrive - State of Illinois - Dept. of Innovation & Technology\68E44 VOB McClugage Lighting\D468E44-LightingDesign.dgn

USER NAME = trevor.hanson	DESIGNED -	REVISED -
	DRAWN -	REVISED -
PLOT SCALE = 101.58 ' / in.	CHECKED -	REVISED -
PLOT DATE = 3/13/2025	DATE -	REVISED -

STATE OF ILLINOIS
DEPARTMENT OF TRANSPORTATION

EXISTING LIGHTING CONTROLLER "B" CIRCUIT DIAGRAM

SCALE: | SHEET OF SHEETS | STA. TO STA.

F.A.P. RTE.	SECTION	COUNTY	TOTAL SHEETS	SHEET NO.
317	(15B-1)BP,BRR; (14HB-1)BRR	PEO/TAZ	406	126
		CONTRACT NO. 68E44		
	ILLINOIS FED. AID PROJECT			

FOR INFORMATION ONLY

LEGEND:

- EXISTING CIRCUIT WIRING
- PROPOSED CIRCUIT WIRING
- # EXISTING OR SALVAGED ROADWAY LUMINAIRE
- # PROPOSED ROADWAY LUMINAIRE
- # PROPOSED PARK LUMINAIRE
- # PROPOSED MAINTENANCE LUMINAIRE
- PROPOSED WATERWAY OBSTRUCTION WARNING LUMINAIRE, GREEN CHANNEL CENTER
- PROPOSED WATERWAY OBSTRUCTION WARNING LUMINAIRE, RED CHANNEL MARGIN
- PROPOSED GFCI 20AMP DUPLEX RECEPTACLE
- U-3 EXISTING UNDERPASS LUMINAIRE
- U-1 PROPOSED UNDERPASS LUMINAIRE

LOAD TABLE			
LIGHTING CONTROLLER "D"			
480/240V, 100AMP			
CIRCUIT	BREAKER	RED	BLACK
		AMPS	AMPS
1	30-1P	5.8	
	30-1P		5.0
2	20-1P	0.6	
3	30-1P		6.7
	30-1P	6.7	
	TOTAL:	12.4 AMPS	
		@480V	

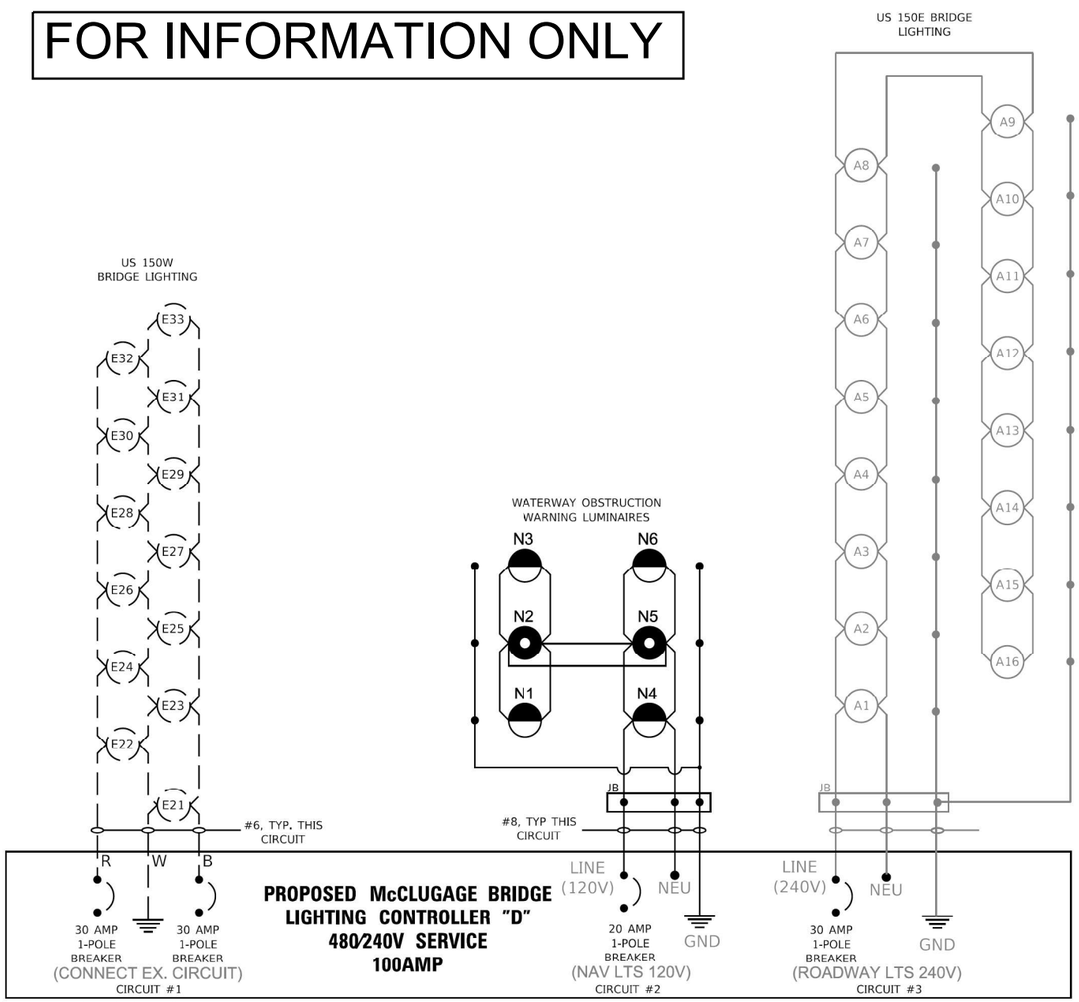

EAST McCLUGAGE BRIDGE PROPOSED WIRING DIAGRAM (TAZEWELL)

ALL ROADWAY LUMINAIRES ARE TO BE WIRED 240V TO NEUTRAL

ALL NAVIGATIONAL LIGHTS ARE TO BE WIRED 120V TO NEUTRAL

NOTE:
EXISTING CIRCUITING TO REMAIN IS BASED ON AS-BUILT INFORMATION.

FINAL SUBMITTAL

MODEL: Default
FILE NAME: C:\Users\trevor.hanson\OneDrive - State of Illinois - Dept. of Innovation & Technology\68E44 WB McClugage Lighting\04e68E44-Lighting Design.dgn

REVISED ERR LTG-21

TYLIN INTERNATIONAL 200 S. WACKER DR. SUITE 1400 CHICAGO, IL 60606 TEL: 312-777-2500	USER NAME = howalder	DESIGNED - SF	REVISED -
		DRAWN - SF	REVISED -
	PLOT SCALE = 100.00 ' / in.	CHECKED -	REVISED -
	PLOT DATE = 5/12/2021	DATE - 11/28/2018	REVISED -

STATE OF ILLINOIS
DEPARTMENT OF TRANSPORTATION

US 150 EASTBOUND McCLUGAGE BRIDGE PROJECT
PROPOSED LIGHTING CONTROLLER CIRCUIT DIAGRAMS

SCALE: NONE | SHEET 4 OF 5 SHEETS | STA. N/A | TO STA. N/A

F.A.P RTE.	SECTION	COUNTY	TOTAL SHEETS	SHEET NO.
317	(15B:[(102-1),(14HB)]BR)BR	TAZEWELL	1361	633R
		CONTRACT NO. 68B46		
	ILLINOIS	FED. AID PROJECT NHPP-YRP3(905)		

MODEL: Default
FILE NAME: C:\Users\trevor.hanson\OneDrive - State of Illinois - Dept. of Innovation & Technology\68E44 WB McClugage Lighting\04e68E44-Lighting Design.dgn

USER NAME = trevor.hanson	DESIGNED -	REVISED -	
	DRAWN -	REVISED -	
PLOT SCALE = 101.58 ' / in.	CHECKED -	REVISED -	
PLOT DATE = 3/13/2025	DATE -	REVISED -	

STATE OF ILLINOIS
DEPARTMENT OF TRANSPORTATION

EXISTING LIGHTING CONTROLLER "D" CIRCUIT DIAGRAM

SCALE: | SHEET OF SHEETS | STA. TO STA.

F.A.P. RTE.	SECTION	COUNTY	TOTAL SHEETS	SHEET NO.
317	(15B-1)BP,BRR: (14HB-1)BRR	PEO/TAZ	406	127
		CONTRACT NO. 68E44		
	ILLINOIS	FED. AID PROJECT		

LOAD TABLE			
LIGHTING CONTROLLER "E"			
480/240V, 100AMP			
CIRCUIT	BREAKER	RED	BLACK
		AMPS	AMPS
1	30-2P	8.1	
			8.1
2	30 2P	6.1	
			6
3	30-2P	10	
			10
4	20-1P	2.5	
	TOTAL:	25.8 AMPS	
		@480V	

TAZEWELL ROADWAY LIGHTING

NOTE:

PROPOSED PEDESTRIAN PATHWAY LUMINAIRES ARE TO BE WIRED INTO ROADWAY LIGHTING LUMINAIRE CIRCUIT WITH WIRING LEADS TO BE SPLICED AT POLE BASE OR INSIDE PROPOSED TRANSFORMER BASE

FOR INFORMATION ONLY

LEGEND:

- EXISTING CIRCUIT WIRING
- PROPOSED CIRCUIT WIRING
- EXISTING OR SALVAGED ROADWAY LUMINAIRE
- PROPOSED ROADWAY LUMINAIRE
- PROPOSED PARK LUMINAIRE
- PROPOSED MAINTENANCE LUMINAIRE
- PROPOSED PEDESTRIAN PATHWAY LUMINAIRE (VLW)
- PROPOSED WATERWAY OBSTRUCTION WARNING LUMINAIRE, GREEN CHANNEL CENTER
- PROPOSED WATERWAY OBSTRUCTION WARNING LUMINAIRE, RED CHANNEL MARGIN
- PROPOSED GFCI 20AMP DUPLEX RECEPTACLE
- U-3 EXISTING UNDERPASS LUMINAIRE
- U-1 PROPOSED UNDERPASS LUMINAIRE

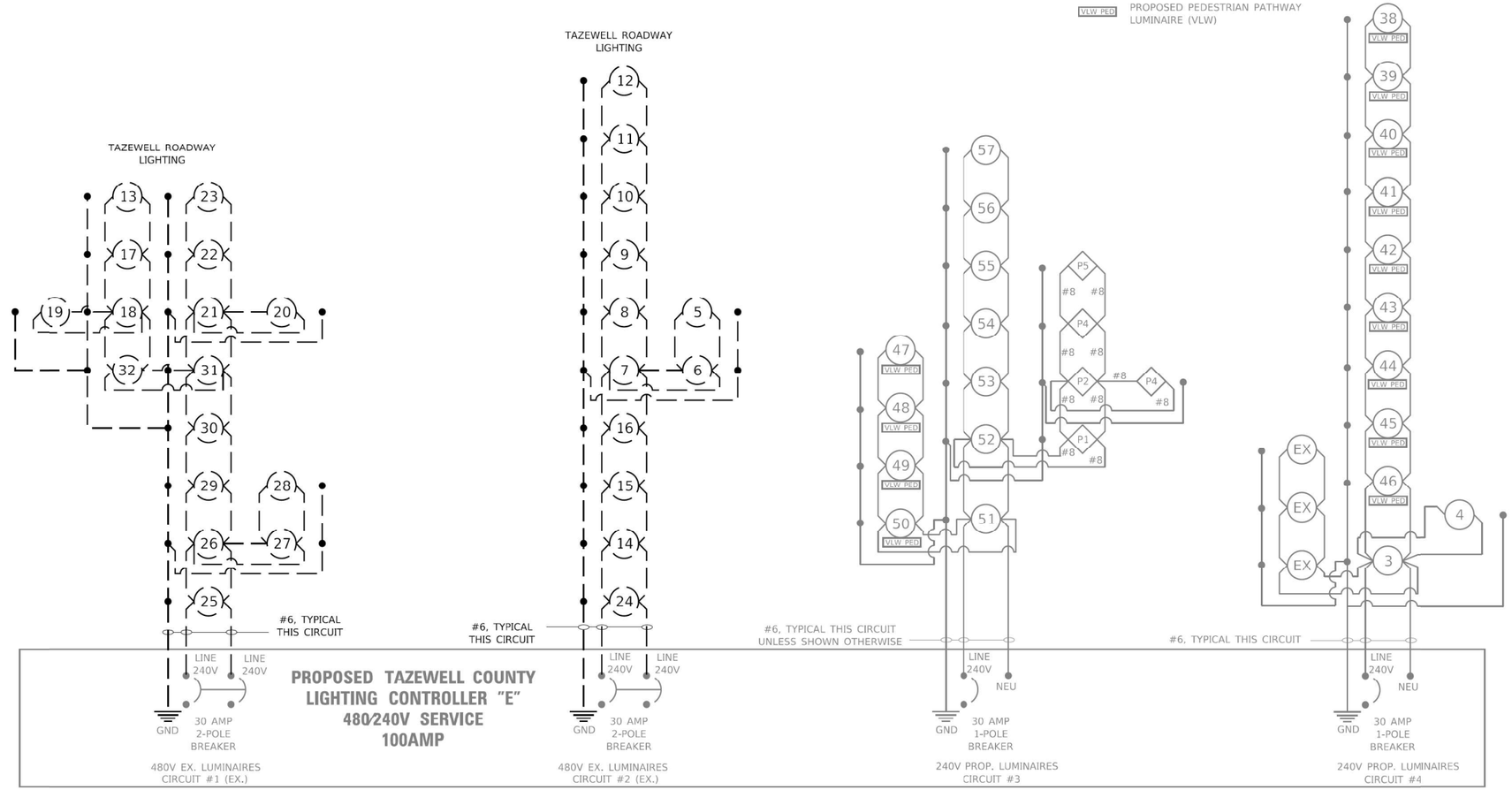

US 150 and IL 116 INTERCHANGE PROPOSED WIRING DIAGRAM (TAZEWELL)

NOTE:
EXISTING CIRCUITING TO REMAIN IS BASED ON AS-BUILT INFORMATION.

FINAL SUBMITTAL

MODEL: Default
FILE NAME: C:\common\GENXTransfer - Bureaus\68B46 - McClugage Bridge ITS Plans (Final 11-16-18)\Revised Lighting Plan Sheets\68B46 - Sheet 634 (Lighting Sheet 22) (3-26-21).dgn

REVISED ERH LTG-22

TYLIN INTERNATIONAL 200 S. WACKER DR. SUITE 1400 CHICAGO, IL 60606 TEL: 312-777-2500	USER NAME = howalder	DESIGNED - SF	REVISED -	STATE OF ILLINOIS DEPARTMENT OF TRANSPORTATION	US 150 EASTBOUND McCLUGAGE BRIDGE PROJECT PROPOSED LIGHTING CONTROLLER CIRCUIT DIAGRAMS
		DRAWN - SF	REVISED -		
	PLOT SCALE = 100.00 ' / in.	CHECKED -	REVISED -		
	PLOT DATE = 5/12/2021	DATE - 11/28/2018	REVISED -		

SCALE: NONE | SHEET 5 OF 5 SHEETS | STA. N/A TO STA. N/A

F.A.P RTE.	SECTION	COUNTY	TOTAL SHEETS	SHEET NO.
317	(15B:((102-1),(14HB))BR)BR	TAZEWELL	1361	634R
		CONTRACT NO. 68B46		
	ILLINOIS FED. AID PROJECT NHPP-YRP3(905)			

MODEL: Default
FILE NAME: C:\Users\Trevor.Hanson\OneDrive - State of Illinois - Dept. of Innovation & Technology\68E44 WB McClugage Lighting\D468E44-LightingDesign.dgn

USER NAME = trevor.hanson	DESIGNED -	REVISED -	STATE OF ILLINOIS DEPARTMENT OF TRANSPORTATION	EXISTING LIGHTING CONTROLLER "E" CIRCUIT DIAGRAM
	DRAWN -	REVISED -		
PLOT SCALE = 101.58 ' / in.	CHECKED -	REVISED -		
PLOT DATE = 3/13/2025	DATE -	REVISED -		

SCALE: | SHEET OF SHEETS | STA. TO STA.

F.A.P. RTE.	SECTION	COUNTY	TOTAL SHEETS	SHEET NO.
317	(15B-1)BP,BRR; (14HB-1)BRR	PEO/TAZ	406	128
		CONTRACT NO. 68E44		
	ILLINOIS FED. AID PROJECT			

CONSTRUCTION NOTES FOR LIGHTING SHEETS	
1.	ELECTRICAL WORK SHALL BE PERFORMED IN ACCORDANCE WITH THE IDOT STANDARD SPECIFICATIONS FOR ROAD AND BRIDGE CONSTRUCTION, LATEST EDITION.
2.	EXISTING UTILITY INFORMATION IS NOT SHOWN ON THE PLAN SHEETS. THE CONTRACTOR SHALL FIELD VERIFY THE LOCATION OF ALL UTILITIES AND PRIVATELY OWNED FACILITIES PRIOR TO THE INSTALLATION OF ANY COMPONENTS.
3.	THE CONTRACTOR SHALL VERIFY FIELD CONDITIONS PRIOR TO BIDDING. THERE WILL BE NO ADDITIONAL COMPENSATION PAID FOR CLAIMS THAT ARISE FROM A FAILURE TO FULLY INVESTIGATE EXISTING FIELD CONDITIONS.
4.	THE CONTRACTOR SHALL BE RESPONSIBLE FOR LOCATING EXISTING IDOT ELECTRICAL FACILITIES AT HIS/HER OWN EXPENSE IF REQUIRED. THE CONTRACTOR SHALL ALSO BE LIABLE FOR ANY DAMAGE TO IDOT FACILITIES RESULTING FROM INACCURATE LOCATING.
5.	ELECTRICAL WORK SHALL CONFORM WITH NATIONAL, STATE, AND LOCAL CODES.
6.	THE CONTRACTOR SHALL PROVIDE ELECTRICAL CABLE SLACK IN ACCORDANCE WITH ARTICLE 873.03.
7.	ALL SURPLUS MATERIALS SHALL BE DISPOSED OF IN ACCORDANCE WITH ARTICLE 202.03 OF THE STANDARD SPECIFICATIONS.
8.	THE EXISTING LIGHTING SYSTEM SHALL REMAIN IN OPERATION UNTIL THE PROPOSED SYSTEM IS INSTALLED AND OPERATIONAL.
9.	ANY MAINTENANCE OF EXISTING ELECTRICAL FACILITIES WILL BE CONSIDERED EXTRA WORK IN ACCORDANCE WITH ARTICLE 109.04 OF THE STANDARD SPECIFICATIONS.
10.	CONTRACTOR SHALL BE RESPONSIBLE TO COORDINATE ELECTRICAL WORK WITH OTHER TRADES.
11.	THE LOCATION OF BURIED AND ABOVE GROUND UTILITIES SHOWN ARE APPROXIMATE AND ARE SHOWN FOR INFORMATION ONLY. REROUTING, DISCONNECTION, RELOCATION, PROTECTION ETC., OF ANY UTILITIES MUST BE COORDINATED BETWEEN THE CONTRACTOR, UTILITY COMPANY, AND OWNER. THE CONTRACTOR SHALL VERIFY THE EXACT LOCATION OF ALL UNDERGROUND UTILITIES PRIOR TO CONSTRUCTION.
12.	THE CONTRACTOR SHALL INSTALL LIGHT POLES AT THE LOCATIONS INDICATED ON THE PLANS, MAINTAINING ADEQUATE CLEARANCE FROM UTILITY LINES. CONTRACTOR SHALL BE RESPONSIBLE TO VERIFY CLEARANCES PER THE NATIONAL ELECTRICAL SAFETY CODE AND/OR THE REQUIREMENTS OF THE UTILITY COMPANIES. THE CONTRACTOR SHALL NOTIFY THE ENGINEER OF ALL CONFLICTS BETWEEN TEMPORARY AND PROPOSED LIGHTING POLE LOCATIONS AND UTILITY LINES.
13.	STAINLESS STEEL SCREEN INSTALLED AROUND ANCHOR RODS AND NUTS SHALL BE ACCORDING TO ARTICLE 1070. THE COST OF THIS WORK SHALL BE INCLUDED IN THE BID PRICE OF THE LIGHT POLES.
14.	THE CONTRACTOR MAY ELECT TO FURNISH AND INSTALL PERFORATED ALUMINUM SCREENING IN LEIU OF STAINLESS STEEL SCREEN AT NO ADDITONAL COST TO THE DEPARTMENT.
15.	THE CONTRACTOR SHALL INSTALL LUMINAIRES LEVEL WITH OPTICS SET PERPENDICULAR TO THE CENTERLINE OF THE ROADWAY.
16.	ALL PROPOSED LIGHTING UNITS SHALL BE LABELED ACCORDING TO THE STANDARD SPECIFICATIONS, WITH POLE NUMBERS ATTACHED WITH STAINLESS STEEL BANDING. LIGHTING UNIT NUMBER SHALL BE AS DIRECTED BY THE ENGINEER. ALL LABELS SHALL BE CONSTRUCTED FROM DIAMOND GRADE SHEETING. LIGHT POLE NUMBER LABELS FOR LUMINAIRES MOUNTED ON THE BRIDGE STRUCTURE SHALL HAVE IDENTIFICATION LABELS INSTALLED ON THE STRUCTURE AT THE LOCATIONS APPROVED BY THE ENGINEER.
17.	THE CONTRACTOR SHALL FURNISH AND INSTALL EXPANSION/DEFLECTION COUPLINGS FOR ALL BRIDGE JOINTS AS REQUIRED AND DIRECTED BY THE ENGINEER. THE COST OF THIS WORK SHALL BE INCLUDED IN THE COST OF THE PROPOSED CONDUIT IN ACCORDANCE WITH ARTICLES 811.03, 811.04, 81203, AND 812.04 OF THE STANDARD SPECIFICATIONS.
18.	ALL NON-METALLIC CONDUIT SHALL BE EQUIPPED WITH INTEGRAL STAINLESS STEEL KELLUM GRIPS AT THE ENDS FOR INCREASED STRENGTH AND DURABILITY. THE COST OF THIS WORK SHALL BE INCLUDED IN THE COST OF THE PROPOSED CONDUIT.
19.	THE CONTRACTOR SHALL INSTALL THREAD LOCKER ON ALL ATTACHED CONDUIT BRACKET THREADED CONNECTIONS TO PREVENT LOOSENING THROUGH VIBRATION. THE COST OF THIS WORK SHALL BE INCLUDED IN THE COST OF THE ATTACHED CONDUIT IN ACCORDANCE WITH ARTICLES 810.05 OF THE STANDARO SPECIFICATIONS.
20.	THE CONTRACTOR SHALL GROUND ALL EXPOSED STEEL CONDUITS IN ACCORDANCE WITH NEC REQUIREMENT. THE CONTRACTOR HALL MAINTAIN THE CONTINUITY OF THE GROUND SYSTEM WHEN USING NON METALLIC CONDUIT BY INSTALLING A #6 GROUNDING CONDUCTOR OUTSIDE THE NON-METALLIC CONDUIT ANO BONDING THIS WIRE TO THE METALLIC CONDUITS AT EACH END. THE COST OF THIS WORK SHALL BE INCLUDED IN THE COST OF THE ATTACHED CONDUIT IN ACCORDANCE WITH ARTICLES 801.02 AND 801.04.
21.	THE CONTRACTOR SHALL FURNISH AND INSTALL ALL ITEMS REQUIRED TO ATTACH THE CONDUITS INCLUDING BUT NOT LIMITED TO UNI-STRUT, BRACKETS, LB , FITTINGS, HARDWARE, ANO OTHER MISCELLANEOUS ITEMS. THESE ITEMS WILL NOT BE PAID FOR SEPARATELY, BUT SHALL BE INCLUDED IN THE COST OF THE ATTACHED CONDUIT IN ACCORDANCE WITH SECTION 811 OF THE STANDARD SPECIFICATIONS.
22.	THE CONTRACTOR MAY ELECT TO SUBSTITUE SDR 13.5 CONTINUOUS DUCT IN LIEU OF PVC SCHEDULE 40 CONDUIT AT NO ADDITIONAL COST TO THE DEPARTMENT.
23.	THE CONTRACTOR SHALL FURNISH AND INSTALL FLEXIBLE NON-METALLIC CONDUIT AS REQUIRED FOR INSTALLATION. THE COST OF THE FLEXIBLE CONDUIT SHALL BE INCLUDED IN THE COST OF THE PROPOSED CONDUIT.
24.	THE CONTRACTOR SHALL FURNISH AND INSTALL ADDITIONAL SUPPORT FOR FLEXIBLE CONDUIT SPANS GREATER THAN FOUR FEET TO PREVENT LOOSENING THROUGH VIBRATION, WIND MOVEMENT, AND FROM SUPPORTING THE WEIGHT OF THE CABLE. THE COST OF THIS WORK SHALL BE INCLUDED IN THE COST OF THE PROPOSED CONDUIT.
25.	THE CONTRACTOR SHALL STAGE THE REMOVAL OF THE EXISTING NAVIGATIONAL LIGHTING AND THE INSTALLATION OF THE NEW NAVIGATIONAL LIGHTING SO AS TO MAINTAIN CONTINUOUS OPERATION OF THE NAVIGATIONAL LIGHTING SYSTEM.
26.	THE CONTRACTOR SHALL PROVIDE ELECTRICAL CABLE SLACK IN ACCORDANCE WITH ARTICLE 817.04.
27.	THE CONTRACTOR SHALL DISPOSE OF THE EXISTING LIGHTING EQUIPMENT AS SHOWN IN THE REMOVAL PLANS.
28.	CONDUIT ATTACHMENT BRACKETS SHALL BE INSTALLED AT 8 FT. SPACINGS (MAXIMUM) ON STRUCTURES.
29.	ALL CONDUIT ATTACHMENT BRACKETS AND HARDWARE SHALL BE CONSTRUCTED FROM GALVANIZED STEEL.
30.	THE CONDUIT BETWEEN WWOL JUNCTION BOXES SHALL BE INSTALLED 25 FT. UP THE VERTICAL MEMBER ON THE NORTH SIDE OF THE BRIDGE, 50 FT. ALONG THE SWAY BRACING, AND 25 FT. DOWN THE VERTICAL MEMBER ON THE SOUTH SIDE OF THE BRIDGE.
31.	THE CONTRACTOR SHALL MODIFY THE EXISTING LIGHTING CONTROLLER "D" TO ADD THE PROPOSED CIRCUITS 4 & 5. THE COST OF THIS WORK SHALL BE INCLUDED IN THE BID PRICE OF THE PAY ITEM "MODIFY EXISTING LIGHTING CONTROLLER."

Illinois Department of Transportation

Print Form | Reset Form

Luminaire Performance Table

Project

Date	Contract Number	Section Number	County
03/11/25	68E44	(15B-1)BP,BRR;(14HB-1	Tazewell

Marked Route Number	Municipality
US150	

Roadway

Lane Width (see note 4)	Number and Directon of lanes	Median Width	Surface Classification	Q-Zero Value
12FT	3 One Direction	0	R3	0.07

Structure

Mounting Height	Arm Length	Set-Back (see note 1)	Number of Luminaries
45FT	15FT	1FT	1

Luminaire

Description	Transverse Distribution	Lateral Distribution
LED, ROADWAY, DESIGNATION G	TYPE III	Medium

Total Light Loss Factor (LLF)	B-U-G Rating	Shields	Dimming Protocol
Refer to Notes 6 and 7	U=0	NA	0-10V

Layout

Spacing	Configuration
230FT	Single Sided

Performance (see notes 5 and 6)

Average Illuminance, E_{AVE} (fc)	Uniformity Ratio, E_{AVE}/E_{MIN}
NA	

Average Luminance, L_{AVE} (cd/m²)	Uniformity Ratio, L_{AVE}/L_{MIN}	Uniformity Ratio, L_{MAX}/L_{MIN}	Veiling Luminance Ratio, L_V/L_{AVE}
≥ 0.6	≤ 3.5	≤ 6.0	≤ 0.3

Light Tresspass (see notes 5 and 7)

Distance to ROW (behind pole)	Max. Horizontal Illuminance at ROW, E_H	Max. Vertical Illuminance at ROW, E_V

Notes

1. Set-Back is from Edge of Pavement (white line).
2. Lighting calculations shall be performed with all luminaires oriented toward and perpendicular to the roadway.
3. Performance requirements shall be the minimum acceptable standards of photometric performance for the luminaire, based on the given conditions listed above.
4. Lane width is the width of each **individual** lane, not to be confused with total roadway width.
5. Compliance with performance criteria shall be held to one significant digit.
6. Photometric calculations for roadways shall be performed with a total light loss factor of 0.7
7. Light trespass calculations shall be performed with a total light loss factor of 1.0 and with horizontal calculations performed at grade and vertical calculations performed with calculation points located three feet above grade.
8. Luminaire performance table is intended to define the luminaire and does not necessarily match any specific roadway geometry, mounting height, setback, or arm length.

Printed 03/12/25

BDE 5630 (Rev. 06/06/24)

WATERWAY OBSTRUCTION WARNING LUMINAIRE SCHEDULE

LABEL	ROUTE	STATION	CIRCUIT	LUMINAIRE TYPE
N1	US 150 WB	225+71	D-4*	WWOWL, LED, 180 DEGREE RED
N2	US 150 WB	225+71	D-4*	WWOWL, LED, 180 DEGREE RED
N3	US 150 WB	222+62	D-4*	WWOWL, LED, 360 DEGREE GREEN
N4	US 150 WB	222+62	D-4*	WWOWL, LED, 360 DEGREE GREEN
N5	US 150 WB	219+57	D-4*	WWOWL, LED, 180 DEGREE RED
N6	US 150 WB	219+57	D-4*	WWOWL, LED, 180 DEGREE RED

* LIGHTING CONTROLLER D SHALL BE MODIFIED TO ACCOMMODATE CIRCUIT D-4

ROADWAY LIGHTING SCHEDULE

LABEL	ROUTE	STATION	CIRCUIT	LIGHT POLE INSTALLATION				TRUSS MOUNTED		LUMINAIRE TYPE
				POLE TYPE	MOUNTING HEIGHT (FT.)	MAST ARM LENGTH (FT.)	FOUNDATION TYPE	MOUNTING HEIGHT (FT.)	MOUNTING BRACKET	
W11	US 150 WB	214+21	B-1	GALV STL	45.0	15.0	PARAPET WALL*			LUM LED RDWY G
W12	US 150 WB	211+60	B-1	GALV STL	45.0	15.0	PARAPET WALL*			LUM LED RDWY G
W13	US 150 WB	209+01	B-1	GALV STL	45.0	15.0	PARAPET WALL*			LUM LED RDWY G
W14	US 150 WB	206+44	B-1	GALV STL	45.0	15.0	PARAPET WALL*			LUM LED RDWY G
W15	US 150 WB	204+28	B-1	GALV STL	45.0	15.0	PARAPET WALL*			LUM LED RDWY G
W16	US 150 WB	201+96	B-1	GALV STL	45.0	15.0	PARAPET WALL*			LUM LED RDWY G
W18	US 150 WB EXIT RAMP	00+38	B-1	GALV STL	45.0	15.0	PARAPET WALL*			LUM LED RDWY G
W21	US 150 WB EXIT RAMP	13+28	B-1	GALV STL	45.0	15.0	PARAPET WALL*			LUM LED RDWY G
E21	US 150 WB	244+78	D-1	GALV STL	45.0	15.0	PARAPET WALL*			LUM LED RDWY G
E22	US 150 WB	242+20	D-1	GALV STL	45.0	15.0	PARAPET WALL*			LUM LED RDWY G
E23	US 150 WB	239+60	D-1	GALV STL	45.0	15.0	PARAPET WALL*			LUM LED RDWY G
E24	US 150 WB	237+03	D-1	GALV STL	45.0	15.0	PARAPET WALL*			LUM LED RDWY G
E25	US 150 WB	234+37	D-1	GALV STL	45.0	15.0	PARAPET WALL*			LUM LED RDWY G
E26	US 150 WB	231+82	D-1	GALV STL	45.0	15.0	PARAPET WALL*			LUM LED RDWY G
E27	US 150 WB	229+31	D-1					45.0	RE-USE EXISTING	LUM LED RDWY G
E28	US 150 WB	227+10	D-1					45.0	RE-USE EXISTING	LUM LED RDWY G
E29	US 150 WB	224+73	D-1					45.0	RE-USE EXISTING	LUM LED RDWY G
E30	US 150 WB	222+92	D-1					45.0	RE-USE EXISTING	LUM LED RDWY G
E31	US 150 WB	220+99	D-1					45.0	RE-USE EXISTING	LUM LED RDWY G
E32	US 150 WB	218+60	D-1					45.0	RE-USE EXISTING	LUM LED RDWY G
E33	US 150 WB	216+35	D-1					45.0	RE-USE EXISTING	LUM LED RDWY G
33	US 150 WB	247+30	D-5**	GALV STL	45.0	15.0	METAL, 15BC 8 5/8X6			LUM LED RDWY G
34	US 150 WB	249+72	D-5**	GALV STL	45.0	15.0	METAL, 15BC 8 5/8X6			LUM LED RDWY G
35	US 150 WB	251+85	D-5**	GALV STL	50.0	15.0	METAL, 15BC 8 5/8X8			LUM LED RDWY G
36	US 150 WB	253+92	D-5**	GALV STL	50.0	15.0	METAL, 15BC 8 5/8X8			LUM LED RDWY G
37	US 150 WB	257+12	D-5**	GALV STL	50.0	15.0	METAL, 15BC 8 5/8X8			LUM LED RDWY G

* LIGHT POLE ANCHOR BOLTS TO BE INSTALLED IN PROPOSED CONCRETE PARAPET WALL BLISTER AS SHOWN IN PLANS

** LIGHTING CONTROLLER D SHALL BE MODIFIED TO ACCOMMODATE CIRCUIT D-5

LIGHTING SCHEDULE OF QUANTITY

ITEM NUMBER	ITEM DESCRIPTION	UNIT	TOTAL QTY.	BRIDGE OVER IL 29 (ADAMS ST.)	US 150 WB MCCLUGAGE BRIDGE
81028350	UNDERGROUND CONDUIT, PVC, 2" DIA.	FOOT	720.0	600.0	120.0
81100300	CONDUIT ATTACHED TO STRUCTURE, 1" DIA., GALVANIZED STEEL	FOOT	615.0		615.0
81200220	CONDUIT EMBEDDED IN STRUCTURE, 1 1/2" DIA., PVC	FOOT	4843.0	415.0	4428.0
81300220	JUNCTION BOX, STAINLESS STEEL, ATTACHED TO STRUCTURE, 6" X 6" X 4"	EACH	7.0		7.0
81300320	JUNCTION BOX, STAINLESS STEEL, ATTACHED TO STRUCTURE, 8" X 8" X 6"	EACH	7.0		7.0
81300600	JUNCTION BOX, STAINLESS STEEL, ATTACHED TO STRUCTURE, 14" X 8" X 6"	EACH	7.0		7.0
81603035	UNIT DUCT, 600V, 2-1C NO.6, 1/C NO.6 GROUND, (XLP-TYPE USE), 1" DIA. POLYETHYLENE	FOOT	1121.0		1121.0
81702120	ELECTRIC CABLE IN CONDUIT, 600V (XLP-TYPE USE) 1/C NO. 8	FOOT	6572.0		6572.0
81702130	ELECTRIC CABLE IN CONDUIT, 600V (XLP-TYPE USE) 1/C NO. 6	FOOT	16321.5	438.5	15883.0
82110007	LUMINAIRE, LED, ROADWAY, OUTPUT DESIGNATION G	EACH	26.0	2.0	24.0
82200608	WATERWAY OBSTRUCTION WARNING LUMINAIRE, LED, 180 DEGREE RED	EACH	4.0		4.0
82200609	WATERWAY OBSTRUCTION WARNING LUMINAIRE, LED, 360 DEGREE GREEN	EACH	2.0		2.0
83060450	LIGHT POLE, GALVANIZED STEEL, 45 FT. M.H., 15 FT. MAST ARM	EACH	16.0	2.0	14.0
83060550	LIGHT POLE, GALVANIZED STEEL, 50 FT. M.H., 15 FT. MAST ARM	EACH	3.0		3.0
83600356	LIGHT POLE FOUNDATION, METAL, 15" BOLT CIRCLE, 8 5/8" X 6'	EACH	2.0		2.0
83600358	LIGHT POLE FOUNDATION, METAL, 15" BOLT CIRCLE, 8 5/8" X 8'	EACH	3.0		3.0
87900100	DRILL EXISTING FOUNDATION	EACH	1.0		1.0
X0327739	MISCELLANEOUS ELECTRICAL WORK	L SUM	1.0		1.0
X8440128	REMOVE EXISTING LIGHTING SYSTEM	L SUM	1.0		1.0
X8950130	MODIFY EXISTING LIGHTING CONTROLLER	EACH	1.0		1.0

PLAN VIEW

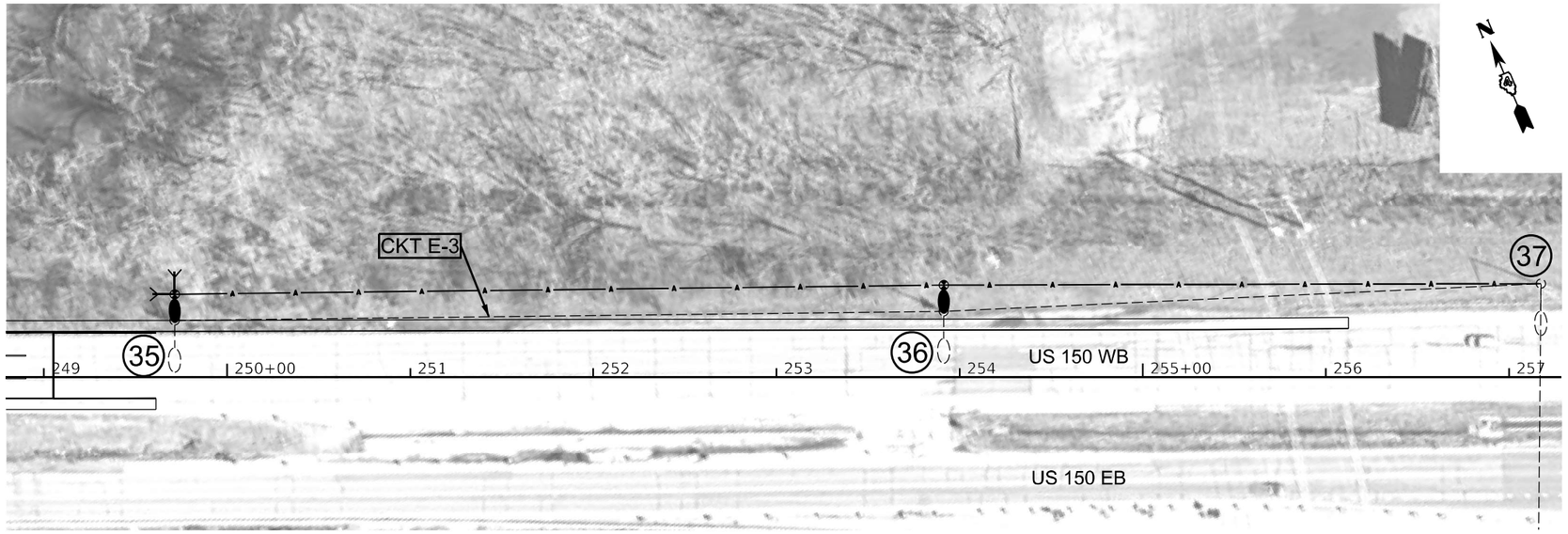

BILL OF MATERIALS		
ITEM DESCRIPTION	UNIT	QTY.
MISCELLANEOUS ELECTRICAL WORK	L SUM	1.0

CROSSOVER LIGHTING NOTES:

1. ALL WORK RELATED TO THE TEMPORARY CROSSOVER LIGHTING SHALL BE INCLUDED IN THE PAY ITEM "MISCELLANEOUS ELECTRICAL WORK."
2. TEMPORARY WOOD POLES SHALL BE SET BACK OUTSIDE OF THE CLEAR ZONE AND OUTSIDE OF THE PROPOSED ROAD WORK, AS APPROVED BY THE RESIDENT ENGINEER.
3. THE LOCATION OF ALL UTILITIES AND PRIVATELY OWNED FACITILIES SHALL BE FIELD VERIFIED BY THE CONTRACTOR PRIOR TO THE INSTALLATION OF ANY COMPONENTS.
4. THE CONTRACTOR SHALL VERIFY FIELD CONDITIONS PRIOR TO BIDDING. THERE WILL BE NO ADDITIONAL COMPENSATION FOR CLAIMS THAT ARISE FROM A FAILURE TO FULLY INVESTIGATE EXISTING FIELD CONDITIONS.
5. GUY WIRE ANCHORS SHALL BE INSTALLED AS NECESSARY TO THE SATISFACTION OF THE RESIDENT ENGINEER.
6. POLE HEIGHT SHALL BE INCREASED AS NECESSARY TO MAINTAIN REQUIRED CLEARANCE OF AERIAL CABLE OVER THE ROADWAY AND LUMINAIRE MOUNTING HEIGHT OF 45 FT. ABOVE THE ROADWAY.
7. THE CONTRACTOR SHALL RELOCATE THE EXISTING LUMINAIRES AND MOUNTING BRACKETS FROM THE EXISTING LIGHT POLES 35 AND 36 TO THE TEMPORARY WOOD POLES AT THOSE LOCATIONS.
8. AT THE CONCLUSION OF THIS PROJECT, THE CONTRACTOR SHALL REMOVE THE CROSSOVER LIGHTING IN ITS ENTIRETY. THE LUMINAIRES WILL BECOME THE PROPERTY OF THE DEPARTMENT AND THE CONTRACTOR SHALL DELIVER THEM TO THE IDOT TRAFFIC BUILDING AT 1025 W. DETWEILLER DR. PEORIA. THE CONTRACTOR SHALL NOTIFY TONY BRIDSON AT 309-370-7522 ATLEAST 48 HOURS BEFORE DELIVERY. THE CONTRACTOR SHALL DISPOSE OF ALL OTHER ITEMS.
9. THE TEMPORARY WOOD POLES SHALL BE INSTALLED WITHIN 15 FT. OF THE EXISTING LIGHT POLES.
10. ALL LABOR AND MATERIALS REQUIRED TO CONNECT THE RELOCATED LUMINAIRES ON THE TEMPORARY WOOD POLES TO THE EXISTING LIGHTING SYSTEM SHALL BE INCLUDED IN THE PAY ITEM "MISCELLANEOUS ELECTRICAL WORK."

LEGEND

- EXISTING LIGHT POLE AND LED LUMINAIRE
- PROPOSED TEMPORARY WOOD POLE, 60 FT., CLASS 3, WITH 15 FT. MAST ARM, RELOCATED EXISITING LED LUMINAIRE
- EXISTING UNIT DUCT
- PROPOSED AERIAL CABLE, SIZED AS NEEDED
- LIGHT POLE NUMBER

MODEL: Default
FILE NAME: C:\Users\Trevor.Hanson\OneDrive - State of Illinois - Dept. of Innovation & Technology\68E44 WB McClugage Lighting\D468E44-LightingDesign.dgn

USER NAME = trevor.hanson	DESIGNED -	REVISED -	
	DRAWN -	REVISED -	
PLOT SCALE = 101.58 ' / in.	CHECKED -	REVISED -	
PLOT DATE = 3/13/2025	DATE -	REVISED -	

STATE OF ILLINOIS
DEPARTMENT OF TRANSPORTATION

PROPOSED CROSSOVER LIGHTING (MISCELLANEOUS ELECTRICAL WORK)

SCALE: SHEET OF SHEETS STA. TO STA.

F.A.P. RTE.	SECTION	COUNTY	TOTAL SHEETS	SHEET NO.
317	(15B-1)BP,BRR; (14HB-1)BRR	PEO/TAZ	406	131
		CONTRACT NO. 68E44		
		ILLINOIS FED. AID PROJECT		

PLAN VIEW

ELEVATION VIEW

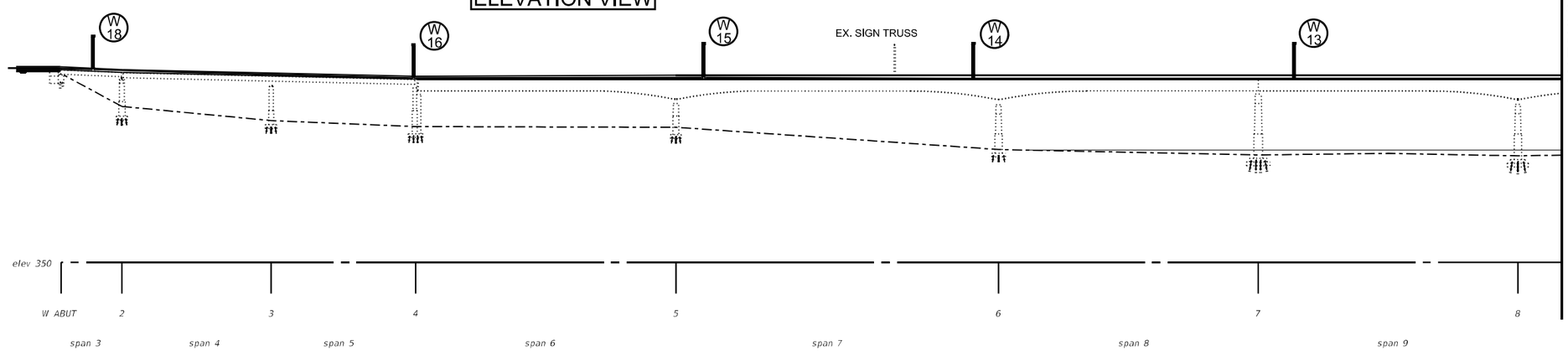

BILL OF MATERIALS		
LIGHTING (STA. 196+00 TO STA. 211+15)		
ITEM DESCRIPTION	UNIT	QTY.
UNDERGROUND CONDUIT, PVC, 2" DIA.	FOOT	600.0
CONDUIT EMBEDDED IN STRUCTURE, 1 1/2" DIA., PVC	FOOT	1342.0
ELECTRIC CABLE IN CONDUIT, 600V (XLP-TYPE USE) 1/C NO. 6	FOOT	4288.5
LUMINAIRE, LED, ROADWAY, OUTPUT DESIGNATION G	EACH	6.0
LIGHT POLE, GALVANIZED STEEL, 45 FT. M.H., 15 FT. MAST ARM	EACH	6.0

CONDUIT/ DUCT LEGEND

- (A) ELECTRIC CABLE IN CONDUIT, 600V (XLP-TYPE USE) 1/C NO. 6 X 3 IN CONDUIT EMBEDDED IN STRUCTURE, 1 1/2" DIA. PVC
- (B) ELECTRIC CABLE IN CONDUIT, 600V (XLP-TYPE USE) 1/C NO. 6 X 3, ELECTRIC CABLE IN CONDUIT, 600V (XLP-TYPE USE) 1/C NO. 8 X 2 IN CONDUIT EMBEDDED IN STRUCTURE, 1 1/2" DIA. PVC
- (C) ELECTRIC CABLE IN CONDUIT, 600V (XLP-TYPE USE) 1/C NO. 8 X 3 IN CONDUIT ATTACHED TO STRUCTURE, 1" DIA. GALVANIZED STEEL
- (D) ELECTRIC CABLE IN CONDUIT, 600V (XLP-TYPE USE) 1/C NO. 6 X 3, ELECTRIC CABLE IN CONDUIT, 600V (XLP-TYPE USE) 1/C NO. 8 X 2 IN UNDERGROUND CONDUIT, PVC 2"
- (E) UNIT DUCT, 600V, 2-1C NO.6, 1/C NO.6 GROUND, (XLP-TYPE USE), 1" DIA. POLYETHYLENE

LEGEND

- PROPOSED GALVANIZED STEEL LIGHT POLE, WITH LED LUMINAIRE
- PROPOSED LED LUMINAIRE INSTALLED ON EX. TRUSS MOUNTED BRACKET
- PROPOSED JUNCTION BOX, STAINLESS STEEL, ATTACHED TO STRUCTURE
- PROPOSED WWOL LUMINAIRE, RED (180°)
- PROPOSED WWOL LUMINAIRE, GREEN (360°)
- ## LIGHT POLE NUMBER
- ## TRUSS MOUNTED LUMINAIRE NUMBER
- ## WWOL LUMINAIRE NUMBER

NOT TO SCALE

MODEL: Default
FILE NAME: C:\Users\Trevor.Hanson\OneDrive - State of Illinois - Dept. of Innovation & Technology\68E44 WB McClugage Lighting\D468E44-lightingDesign.dgn

USER NAME = trevor.hanson	DESIGNED -	REVISED -
	DRAWN -	REVISED -
PLOT SCALE = 101.58 ' / in.	CHECKED -	REVISED -
PLOT DATE = 3/13/2025	DATE -	REVISED -

STATE OF ILLINOIS
DEPARTMENT OF TRANSPORTATION

PROPOSED LIGHTING IMPROVEMENTS
US 150 WB MCCLUGAGE BRIDGE

SCALE: | SHEET OF SHEETS | STA. TO STA.

F.A.P. RTE.	SECTION	COUNTY	TOTAL SHEETS	SHEET NO.
317	(15B-1)BP,BRR; (14HB-1)BRR	PEO/TAZ	406	132

CONTRACT NO. 68E44

ILLINOIS | FED. AID PROJECT

PLAN VIEW

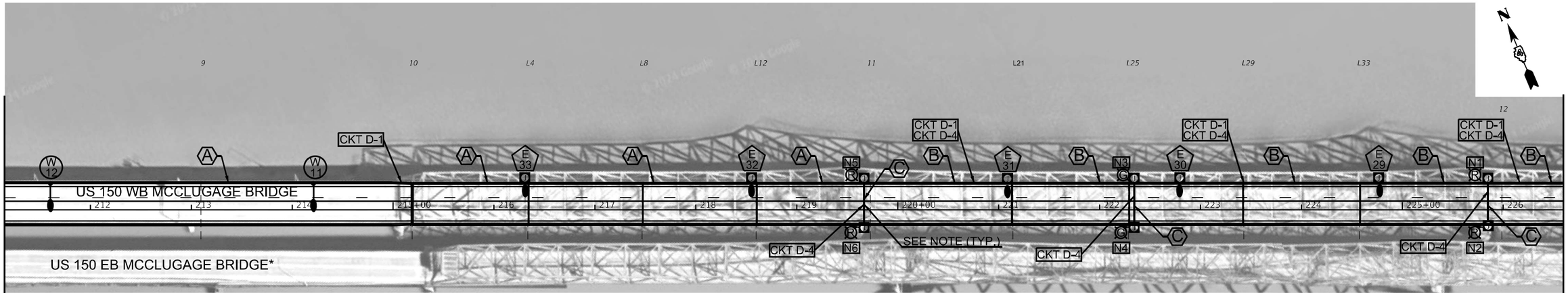

* US 150 EB MCCLUGAGE BRIDGE REPLACEMENT, SEE IDOT CONTRACT 68B46

NOTES:

1. THE CONDUIT BETWEEN WWOL JUNCTION BOXES SHALL BE INSTALLED 25 FT. UP THE VERTICAL MEMBER ON THE NORTH SIDE OF THE BRIDGE, 50 FT. ALONG THE SWAY BRACING, AND 25 FT. DOWN THE VERTICAL MEMBER ON THE SOUTH SIDE OF THE BRIDGE.

ELEVATION VIEW

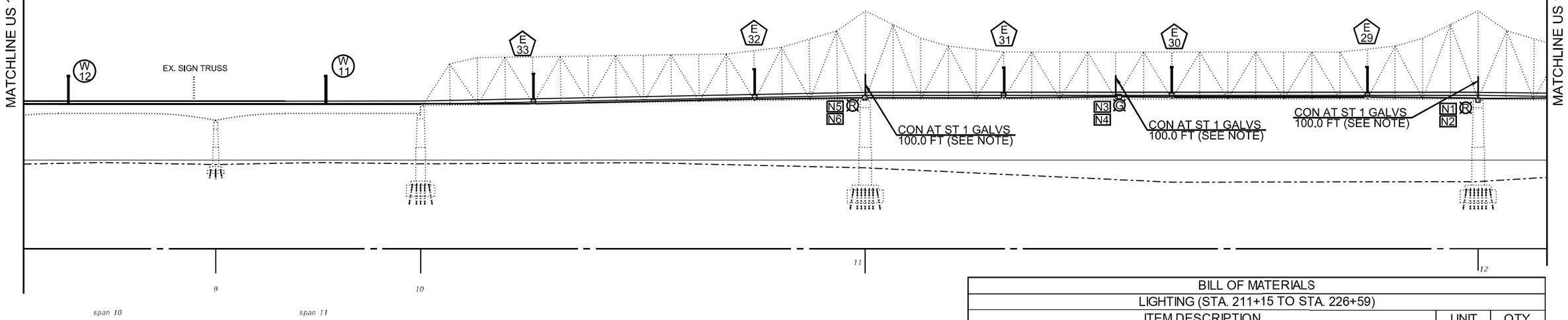

CONDUIT/ DUCT LEGEND

- (A) ELECTRIC CABLE IN CONDUIT, 600V (XLP-TYPE USE) 1/C NO. 6 X 3 IN CONDUIT EMBEDDED IN STRUCTURE, 1 1/2" DIA. PVC
- (B) ELECTRIC CABLE IN CONDUIT, 600V (XLP-TYPE USE) 1/C NO. 6 X 3, ELECTRIC CABLE IN CONDUIT, 600V (XLP-TYPE USE) 1/C NO. 8 X 2 IN CONDUIT EMBEDDED IN STRUCTURE, 1 1/2" DIA. PVC
- (C) ELECTRIC CABLE IN CONDUIT, 600V (XLP-TYPE USE) 1/C NO. 8 X 3 IN CONDUIT ATTACHED TO STRUCTURE, 1" DIA. GALVANIZED STEEL
- (D) ELECTRIC CABLE IN CONDUIT, 600V (XLP-TYPE USE) 1/C NO. 6 X 3, ELECTRIC CABLE IN CONDUIT, 600V (XLP-TYPE USE) 1/C NO. 8 X 2 IN UNDERGROUND CONDUIT, PVC 2"
- (E) UNIT DUCT, 600V, 2-1C NO.6, 1/C NO.6 GROUND, (XLP-TYPE USE), 1" DIA. POLYETHYLENE

LEGEND

- PROPOSED GALVANIZED STEEL LIGHT POLE, WITH LED LUMINAIRE
- PROPOSED LED LUMINAIRE INSTALLED ON EX. TRUSS MOUNTED BRACKET
- PROPOSED JUNCTION BOX, STAINLESS STEEL, ATTACHED TO STRUCTURE
- (R) PROPOSED WWOL LUMINAIRE, RED (180°)
- (G) PROPOSED WWOL LUMINAIRE, GREEN (360°)
- (##) LIGHT POLE NUMBER
- (E 33) TRUSS MOUNTED LUMINAIRE NUMBER
- (N3) WWOL LUMINAIRE NUMBER

BILL OF MATERIALS

LIGHTING (STA. 211+15 TO STA. 226+59)

ITEM DESCRIPTION	UNIT	QTY.
CONDUIT ATTACHED TO STRUCTURE, 1" DIA., GALVANIZED STEEL	FOOT	525.0
CONDUIT EMBEDDED IN STRUCTURE, 1 1/2" DIA., PVC	FOOT	1545.0
JUNCTION BOX, STAINLESS STEEL, ATTACHED TO STRUCTURE, 6" X 6" X 4"	EACH	5.0
JUNCTION BOX, STAINLESS STEEL, ATTACHED TO STRUCTURE, 8" X 8" X 6"	EACH	5.0
JUNCTION BOX, STAINLESS STEEL, ATTACHED TO STRUCTURE, 14" X 8" X 6"	EACH	6.0
ELECTRIC CABLE IN CONDUIT, 600V (XLP-TYPE USE) 1/C NO. 8	FOOT	2339.0
ELECTRIC CABLE IN CONDUIT, 600V (XLP-TYPE USE) 1/C NO. 6	FOOT	5433.0
LUMINAIRE, LED, ROADWAY, OUTPUT DESIGNATION G	EACH	7.0
WATERWAY OBSTRUCTION WARNING LUMINAIRE, LED, 180 DEGREE RED	EACH	4.0
WATERWAY OBSTRUCTION WARNING LUMINAIRE, LED, 360 DEGREE GREEN	EACH	2.0
LIGHT POLE, GALVANIZED STEEL, 45 FT. M.H., 15 FT. MAST ARM	EACH	2.0

NOT TO SCALE

USER NAME = trevor.hanson	DESIGNED -	REVISED -
	DRAWN -	REVISED -
PLOT SCALE = 101.58 ' / in.	CHECKED -	REVISED -
PLOT DATE = 3/13/2025	DATE -	REVISED -

STATE OF ILLINOIS
DEPARTMENT OF TRANSPORTATION

PROPOSED LIGHTING IMPROVEMENTS
US 150 WB MCCLUGAGE BRIDGE – CONTINUED

SCALE: | SHEET OF SHEETS | STA. TO STA.

F.A.P. RTE.	SECTION	COUNTY	TOTAL SHEETS	SHEET NO.
317	(15B-1)BP,BRR; (14HB-1)BRR	PEO/TAZ	406	133
		CONTRACT NO. 68E44		
		ILLINOIS FED. AID PROJECT		

MODEL: Default
FILE NAME: C:\Users\Trevor.Hanson\OneDrive - State of Illinois - Dept. of Innovation & Technology\68E44 WB McCluagage Lighting\D468E44-LightingDesign.dgn

PLAN VIEW

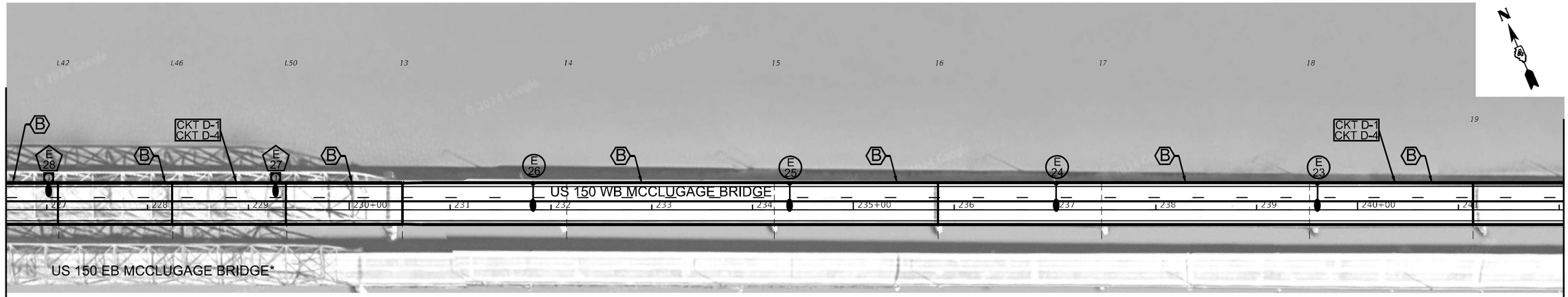

* US 150 EB MCCLUGAGE BRIDGE REPLACEMENT,
SEE IDOT CONTRACT 68B46

MATCHLINE US 150 STA. 226+59.00

MATCHLINE US 150 STA. 242+05.00

ELEVATION VIEW

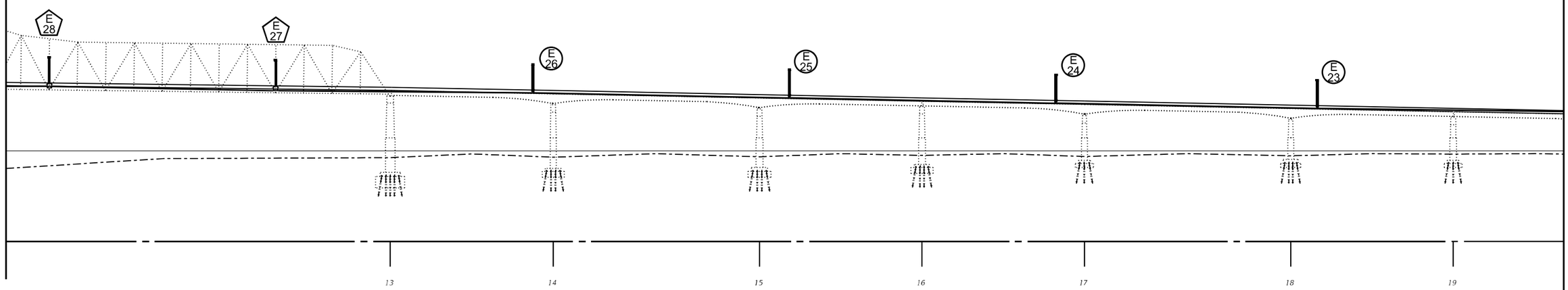

CONDUIT/ DUCT LEGEND

- (A) ELECTRIC CABLE IN CONDUIT, 600V (XLP-TYPE USE) 1/C NO. 6 X 3 IN CONDUIT EMBEDDED IN STRUCTURE, 1 1/2" DIA. PVC
- (B) ELECTRIC CABLE IN CONDUIT, 600V (XLP-TYPE USE) 1/C NO. 6 X 3, ELECTRIC CABLE IN CONDUIT, 600V (XLP-TYPE USE) 1/C NO. 8 X 2 IN CONDUIT EMBEDDED IN STRUCTURE, 1 1/2" DIA. PVC
- (C) ELECTRIC CABLE IN CONDUIT, 600V (XLP-TYPE USE) 1/C NO. 8 X 3 IN CONDUIT ATTACHED TO STRUCTURE, 1" DIA. GALVANIZED STEEL
- (D) ELECTRIC CABLE IN CONDUIT, 600V (XLP-TYPE USE) 1/C NO. 6 X 3, ELECTRIC CABLE IN CONDUIT, 600V (XLP-TYPE USE) 1/C NO. 8 X 2 IN UNDERGROUND CONDUIT, PVC 2"
- (E) UNIT DUCT, 600V, 2-1C NO.6, 1/C NO.6 GROUND, (XLP-TYPE USE), 1" DIA. POLYETHYLENE

LEGEND

- PROPOSED GALVANIZED STEEL LIGHT POLE, WITH LED LUMINAIRE
- PROPOSED LED LUMINAIRE INSTALLED ON EX. TRUSS MOUNTED BRACKET
- PROPOSED JUNCTION BOX, STAINLESS STEEL, ATTACHED TO STRUCTURE
- PROPOSED WWOL LUMINAIRE, RED (180°)
- PROPOSED WWOL LUMINAIRE, GREEN (360°)
- ## LIGHT POLE NUMBER
- E 23 TRUSS MOUNTED LUMINAIRE NUMBER
- N3 WWOL LUMINAIRE NUMBER

BILL OF MATERIALS

LIGHTING (STA. 226+59 TO STA. 242+05)

ITEM DESCRIPTION	UNIT	QTY.
CONDUIT ATTACHED TO STRUCTURE, 1" DIA., GALVANIZED STEEL	FOOT	90.0
CONDUIT EMBEDDED IN STRUCTURE, 1 1/2" DIA., PVC	FOOT	1545.0
JUNCTION BOX, STAINLESS STEEL, ATTACHED TO STRUCTURE, 6" X 6" X 4"	EACH	2.0
JUNCTION BOX, STAINLESS STEEL, ATTACHED TO STRUCTURE, 8" X 8" X 6"	EACH	2.0
ELECTRIC CABLE IN CONDUIT, 600V (XLP-TYPE USE) 1/C NO. 8	FOOT	3108.0
ELECTRIC CABLE IN CONDUIT, 600V (XLP-TYPE USE) 1/C NO. 6	FOOT	4900.5
LUMINAIRE, LED, ROADWAY, OUTPUT DESIGNATION G	EACH	6.0
LIGHT POLE, GALVANIZED STEEL, 45 FT. M.H., 15 FT. MAST ARM	EACH	4.0

NOT TO SCALE

MODEL: Default
FILE NAME: C:\Users\trevor.hanson\OneDrive - State of Illinois - Dept. of Innovation & Technology\68E44 WB McClugage Lighting\D468E44-Lighting Design.dgn

USER NAME = trevor.hanson	DESIGNED -	REVISED -	
	DRAWN -	REVISED -	
PLOT SCALE = 101.58 ' / in.	CHECKED -	REVISED -	
PLOT DATE = 3/13/2025	DATE -	REVISED -	

STATE OF ILLINOIS
DEPARTMENT OF TRANSPORTATION

PROPOSED LIGHTING IMPROVEMENTS
US 150 WB MCCLUGAGE BRIDGE – CONTINUED

SCALE: | SHEET OF SHEETS | STA. TO STA.

F.A.P. RTE.	SECTION	COUNTY	TOTAL SHEETS	SHEET NO.
317	(15B-1)BP,BRR; (14HB-1)BRR	PEO/TAZ	406	134

CONTRACT NO. 68E44

ILLINOIS | FED. AID PROJECT

PLAN VIEW

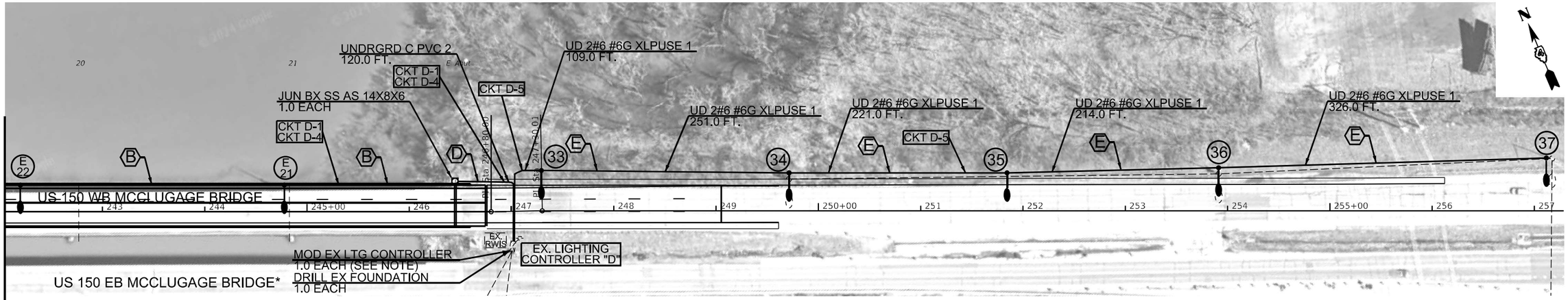

* US 150 EB MCCLUGAGE BRIDGE REPLACEMENT, SEE IDOT CONTRACT 68B46

NOTES:

1. THE CONTRACTOR SHALL MODIFY THE EXISTING LIGHTING CONTROLLER "D" TO ADD THE PROPOSED CIRCUITS 4 & 5. THE COST OF THIS WORK SHALL BE INCLUDED IN THE BID PRICE OF THE PAY ITEM "MODIFY EXISTING LIGHTING CONTROLLER."
2.

MATCHLINE US 150 STA. 242+05.00

ELEVATION VIEW

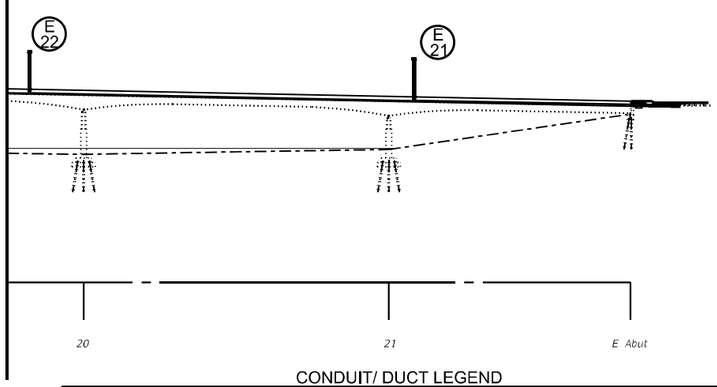

BILL OF MATERIALS		
LIGHTING (STA. 242+05 TO STA. 257+30)		
ITEM DESCRIPTION	UNIT	QTY.
UNDERGROUND CONDUIT, PVC, 2" DIA.	FOOT	120.0
CONDUIT EMBEDDED IN STRUCTURE, 1 1/2" DIA., PVC	FOOT	441.0
JUNCTION BOX, STAINLESS STEEL, ATTACHED TO STRUCTURE, 14" X 8" X 6"	EACH	1.0
UNIT DUCT, 600V, 2-1C NO.6, 1/C NO.6 GROUND, (XLP-TYPE USE), 1" DIA. POLYETHYLENE	FOOT	1121.0
ELECTRIC CABLE IN CONDUIT, 600V (XLP-TYPE USE) 1/C NO. 8	FOOT	1125.0
ELECTRIC CABLE IN CONDUIT, 600V (XLP-TYPE USE) 1/C NO. 6	FOOT	1699.5
LUMINAIRE, LED, ROADWAY, OUTPUT DESIGNATION G	EACH	7.0
LIGHT POLE, GALVANIZED STEEL, 45 FT. M.H., 15 FT. MAST ARM	EACH	4.0
LIGHT POLE, GALVANIZED STEEL, 50 FT. M.H., 15 FT. MAST ARM	EACH	3.0
LIGHT POLE FOUNDATION, METAL, 15" BOLT CIRCLE, 8 5/8" X 6'	EACH	2.0
LIGHT POLE FOUNDATION, METAL, 15" BOLT CIRCLE, 8 5/8" X 8'	EACH	3.0
DRILL EXISTING FOUNDATION	EACH	1.0
MODIFY EXISTING LIGHTING CONTROLLER	EACH	1.0

CONDUIT/ DUCT LEGEND

- (A) ELECTRIC CABLE IN CONDUIT, 600V (XLP-TYPE USE) 1/C NO. 6 X 3 IN CONDUIT EMBEDDED IN STRUCTURE, 1 1/2" DIA. PVC
- (B) ELECTRIC CABLE IN CONDUIT, 600V (XLP-TYPE USE) 1/C NO. 6 X 3, ELECTRIC CABLE IN CONDUIT, 600V (XLP-TYPE USE) 1/C NO. 8 X 2 IN CONDUIT EMBEDDED IN STRUCTURE, 1 1/2" DIA. PVC
- (C) ELECTRIC CABLE IN CONDUIT, 600V (XLP-TYPE USE) 1/C NO. 8 X 3 IN CONDUIT ATTACHED TO STRUCTURE, 1" DIA. GALVANIZED STEEL
- (D) ELECTRIC CABLE IN CONDUIT, 600V (XLP-TYPE USE) 1/C NO. 6 X 3, ELECTRIC CABLE IN CONDUIT, 600V (XLP-TYPE USE) 1/C NO. 8 X 2 IN UNDERGROUND CONDUIT, PVC 2"
- (E) UNIT DUCT, 600V, 2-1C NO.6, 1/C NO.6 GROUND, (XLP-TYPE USE), 1" DIA. POLYETHYLENE

LEGEND

- PROPOSED GALVANIZED STEEL LIGHT POLE, WITH LED LUMINAIRE
- PROPOSED LED LUMINAIRE INSTALLED ON EX. TRUSS MOUNTED BRACKET
- PROPOSED JUNCTION BOX, STAINLESS STEEL, ATTACHED TO STRUCTURE
- PROPOSED WWOL LUMINAIRE, RED (180°)
- PROPOSED WWOL LUMINAIRE, GREEN (360°)
- ## LIGHT POLE NUMBER
- E 33 TRUSS MOUNTED LUMINAIRE NUMBER
- W3 WWOL LUMINAIRE NUMBER

NOT TO SCALE

MODEL: Default
FILE NAME: C:\Users\Trevor.Hanson\OneDrive - State of Illinois - Dept. of Innovation & Technology\68E44 WB McClugage Lighting\D468E44-LightingDesign.dgn

USER NAME = trevor.hanson	DESIGNED -	REVISED -	
	DRAWN -	REVISED -	
PLOT SCALE = 101.58 ' / in.	CHECKED -	REVISED -	
PLOT DATE = 3/13/2025	DATE -	REVISED -	

STATE OF ILLINOIS
DEPARTMENT OF TRANSPORTATION

PROPOSED LIGHTING IMPROVEMENTS
US 150 WB MCCLUGAGE BRIDGE – CONTINUED

SCALE: | SHEET OF SHEETS | STA. TO STA.

F.A.P. RTE.	SECTION	COUNTY	TOTAL SHEETS	SHEET NO.
317	(15B-1)BP,BRR; (14HB-1)BRR	PEO/TAZ	406	135
		CONTRACT NO. 68E44		
		ILLINOIS FED. AID PROJECT		

NOTES:
1. THE CONTRACTOR SHALL MODIFY THE EXISTING LIGHTING CONTROLLER "D" TO ADD THE PROPOSED CIRCUITS 4 & 5. THE EXISTING SPARE CIRCUIT BREAKERS SHALL REMAIN IN PLACE AS SPARES, THE CONTRACTOR SHALL INSTALL NEW CIRCUIT BREAKERS TO ACCOMODATE THE INSTALLATION OF PROPOSED CIRCUITS 4 & 5. THE THE COST OF THIS WORK SHALL BE INCLUDED IN THE BID PRICE OF THE PAY ITEM "MODIFY EXISTING LIGHTING CONTROLLER."

LEGEND

- EXISTING CIRCUIT WIRING
- PROPOSED CIRCUIT WIRING
- ## EXISTING ROADWAY LUMINAIRE
- ## PROPOSED ROADWAY LUMINAIRE
- N# (G) EXISTING WATERWAY OBSTRUCTION WARNING LUMINAIRE (GREEN)
- N# (R) EXISTING WATERWAY OBSTRUCTION WARNING LUMINAIRE (RED)
- N# (G) PROPOSED WATERWAY OBSTRUCTION WARNING LUMINAIRE (GREEN)
- N# (R) PROPOSED WATERWAY OBSTRUCTION WARNING LUMINAIRE (RED)

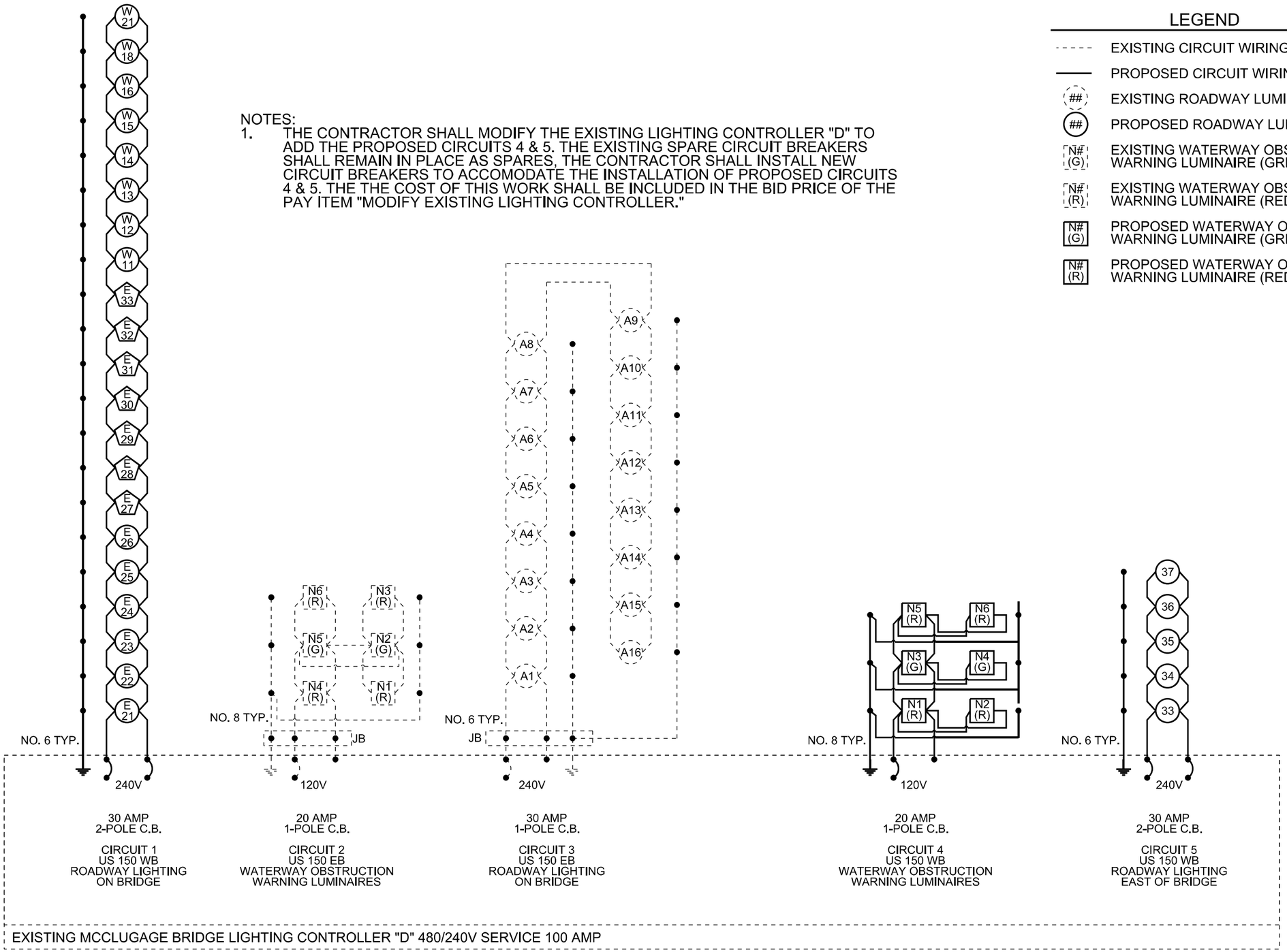

THE EXISTING SPARE CIRCUIT BREAKERS SHALL REMAIN IN PLACE AS SPARES.

NOT TO SCALE

USER NAME = trevor.hanson	DESIGNED -	REVISED -	
	DRAWN -	REVISED -	
PLOT SCALE = 101.58 ' / in.	CHECKED -	REVISED -	
PLOT DATE = 3/13/2025	DATE -	REVISED -	

STATE OF ILLINOIS
DEPARTMENT OF TRANSPORTATION

LIGHTING CONTROLLER "D" CIRCUIT DIAGRAM

SCALE: | SHEET OF SHEETS | STA. TO STA.

F.A.P. RTE.	SECTION	COUNTY	TOTAL SHEETS	SHEET NO.
317	(15B-1)BP,BRR: (14HB-1)BRR	PEO/TAZ	406	136

CONTRACT NO. 68E44

ILLINOIS | FED. AID PROJECT

MODEL: Default
FILE NAME: C:\Users\Trevor.Hanson\OneDrive - State of Illinois - Dept. of Innovation & Technology\68E44 WB McClugage Lighting\D46E44-Lighting Design.dgn

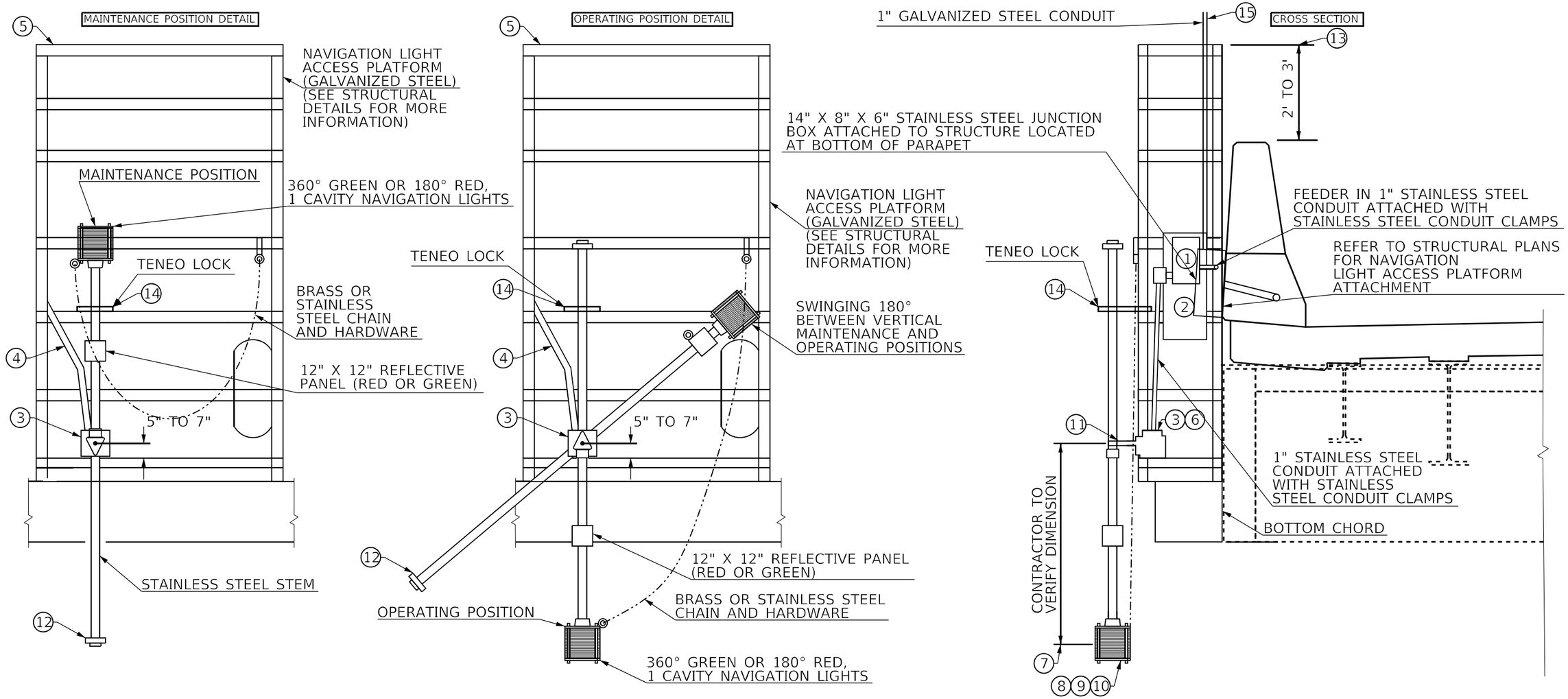

NOTES:

1. NEMA 4X STAINLESS STEEL JUNCTION BOX WITH 30 AMP DISCONNECT SWITCH IN WEATHERTIGHT CASE FUSE.
2. 3/16" STAINLESS STEEL MOUNTING PANEL FASTENED TO ACCESS PLATFORM WITH STAINLESS STEEL BOLTS, FLAT WASHERS, AND SELF-LOCKING NUTS.
3. STAINLESS STEEL JUNCTION BOX.
4. 1" STAINLESS STEEL CONDUIT.
5. SEE STRUCTURAL PLANS FOR NAVIGATION LIGHTING ACCESS PLATFORM DETAIL.
6. ALL NAVIGATION LIGHTS SHALL BE MOUNTED TO NAVIGATION LIGHT ACCESS PLATFORM AND ABLE TO SWING UP 180° FROM THE OPERATING POSITION TO THE MAINTENANCE POSITION. THE OPERATING POSITION AND MAINTENANCE POSITIONS SHALL BE LOCKED IN PLACE WITH A STAINLESS STEEL HINGED MECHANISM THAT IS PADLOCKABLE (TENEO LOCK.)
7. STEM PIPE LENGTH SHALL PLACE THE LIGHT FOCAL PLANE 2' BELOW THE BOTTOM CHORD.
8. NAVIGATION LIGHT HEADS SHALL BE MARINE-ALLOY BRONZE.
9. THE PROPOSED LIGHT FIXTURES SHALL CONTAIN SINGLE LED BULB MEDIUM (STANDARD) BASES.
10. THE PROPOSD LIGHT FIXTURE HINGED ACCESS DOOR SHALL BE TOOL-LESS AND PROVIDE ACCESS TO THE BULB FROM THE ACCESS PLATFORM.
11. SEALED, PERMANENTLY LUBRICATED, MAINTENANCE FREE SWIVEL.
12. COUNTERWEIGHT IS REQUIRED.
13. THE TOP RAILING OF THE NAVGATION LIGHT ACCES PLATFORM SHALL BE 2' TO 3' ABOVE THE TOP OF THE PROPOSED CONCRETE PARAPET.
14. TENEO LOCK, STAINLESS STEEL, WITH HINGED MECHANISM TO LOCK STEM IN OPERATING AND MAINTENANCE POSITIONS USING PADLOCK. (SEE LIGHTING DETAIL)
15. 1" GALVANIZED STEEL CONDUIT, ATTACHED TO STRUCTURE, CROSSING OVER ROADWAY TO ACCESS PLATFORM ON OPPOSITE SIDE OF BRIDGE

THE CONTRACTOR SHALL FURNISH AND INSTALL ONE NEMA 4X 30A DISCONNECT, STAINLESS STEEL CONDUIT, MOUNTING PLATE, BRACKETS, HARDWARE, STAINLESS STEEL STEM, REFLECTIVE PANEL, CHAIN AND HARDWARE, NAVIGATION LIGHT HEADS, FIXTURES, TENEO LOCK, AND OTHER ITEMS AS SHOWN ON THE WATERWAY OBSTRUCTION WARNING LUMINAIRE DETAIL. THE COST OF THESE ITEMS WILL NOT BE PAID FOR SEPARATELY, BUT SHALL BE INCLUDED IN THE COST OF THE PROPOSED WATERWAY OBSTRUCTION WARNING LUMINAIRES.

NOT TO SCALE

MODEL: Default
FILE NAME: C:\Users\Trevor.Hanson\OneDrive - State of Illinois - Dept. of Innovation & Technology\68E44 WB McClugage Lighting\D468E44-LightingDesign.dgn

USER NAME = trevor.hanson	DESIGNED -	REVISED -	
	DRAWN -	REVISED -	
PLOT SCALE = 101.58 ' / in.	CHECKED -	REVISED -	
PLOT DATE = 3/13/2025	DATE -	REVISED -	

STATE OF ILLINOIS
DEPARTMENT OF TRANSPORTATION

WATERWAY OBSTRUCTION WARNING LUMINAIRE DETAIL

SCALE: | SHEET OF SHEETS | STA. TO STA.

F.A.P. RTE.	SECTION	COUNTY	TOTAL SHEETS	SHEET NO.
317	(15B-1)BP,BRR; (14HB-1)BRR	PEO/TAZ	406	137

CONTRACT NO. 68E44

ILLINOIS | FED. AID PROJECT

LIGHTING DETAIL 1

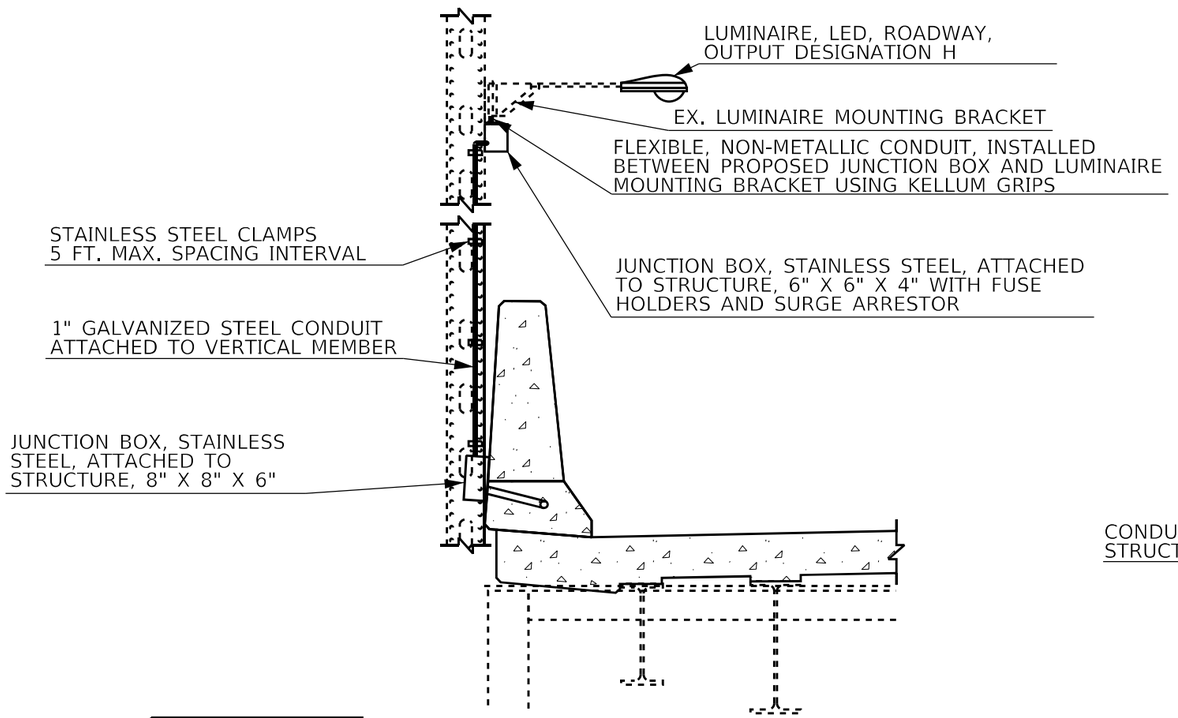

LIGHTING DETAIL 2

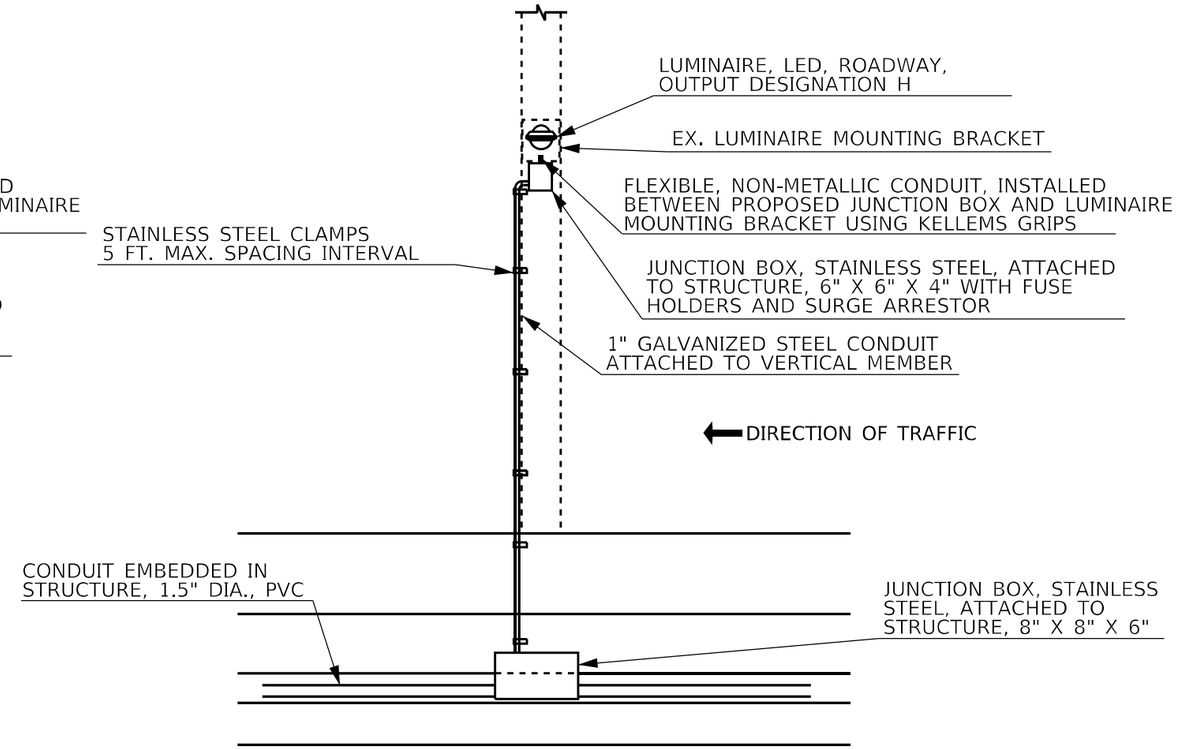

PLAN AT LIGHT POLE BLISTER CONDUIT DETAIL

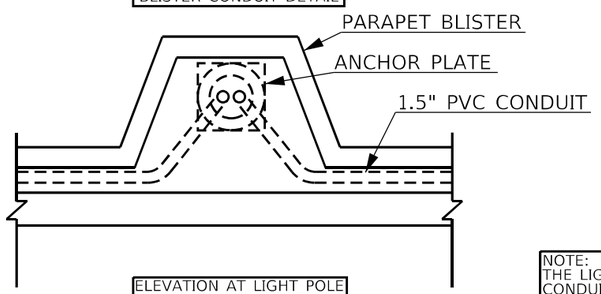

ELEVATION AT LIGHT POLE BLISTER CONDUIT DETAIL

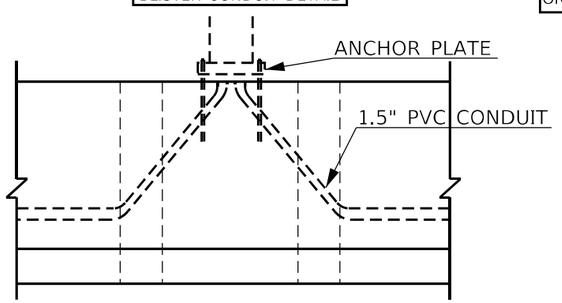

NOTE:
THE LIGHT POLE BLISTER DETAILS ARE TO SHOW CONDUIT INSTALLATION, NOT BLISTER DIMENSIONS OR DETAILS

LIGHTING DETAIL 3
TENEO LOCK

NOTE: USE 1/2" S.S. BOLTS AND NUTS FOR INSTALLING TENEO LOCK AND FIXTURES. TYPE AND LENGTH DETERMINED BY OTHERS.

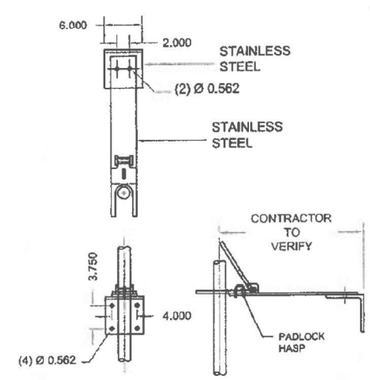

VIEWS OF TENEO LOCK

TENEO LOCK

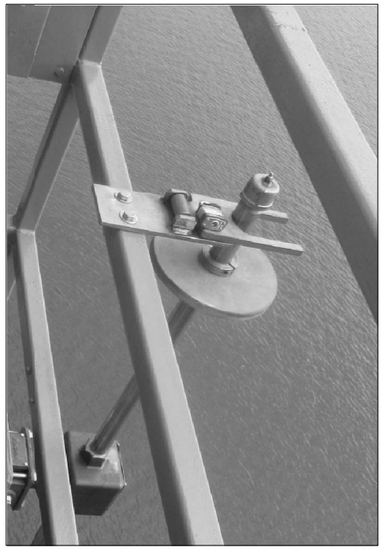

NOT TO SCALE

MODEL: Default
FILE NAME: C:\Users\Trevor.Hanson\OneDrive - State of Illinois - Dept. of Innovation & Technology\68E44 VB McClugage Lighting\D468E44-LightingDesign.dgn

USER NAME = trevor.hanson	DESIGNED -	REVISED -	
	DRAWN -	REVISED -	
PLOT SCALE = 101.58 ' / in.	CHECKED -	REVISED -	
PLOT DATE = 3/13/2025	DATE -	REVISED -	

STATE OF ILLINOIS
DEPARTMENT OF TRANSPORTATION

LIGHTING DETAILS

SCALE: SHEET OF SHEETS STA. TO STA.

F.A.P. RTE.	SECTION	COUNTY	TOTAL SHEETS	SHEET NO.
317	(15B-1)BP,BRR; (14HB-1)BRR	PEO/TAZ	406	138
		CONTRACT NO. 68E44		
		ILLINOIS FED. AID PROJECT		

Bench Mark: Brass disk grouted in concrete median at easterly back of curb of northbound NE Adams Street (IL 29) approximately 68' south of south face of bridge for EB US Route 150 over NE Adams Street (IL 29). N: 1,477,823.80 E: 2,466,074.68 Elev. 488.65

Existing Structure: S.N. 072-0168 built in 1995 as F.A.P. Route 317 (WB US Route 150), Section (14HB-1)BRR at Station 197+46.50. The structure consists of a four-span continuous steel multi-beam unit with a total structure length of 199'-9 3/8" back-to-back of abutments. The out-to-out width of the flared deck varies from 82'-3 1/8" to 68'-1 3/16". The structure carries two westbound lanes and a diverging off-ramp (Ramp D). The substructure units consist of stub abutments and multiple column grade separation piers. The stub abutments and piers are supported on concrete piles. The structure is skewed approximately 7 degrees.

Traffic: Bridge to be closed to traffic during construction.

Salvage: No salvage.

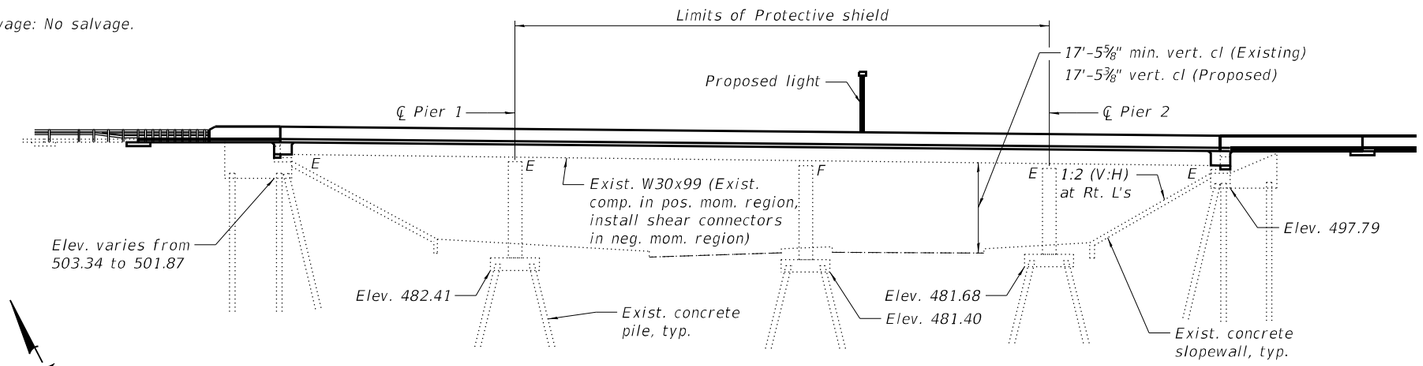

ELEVATION

Looking North

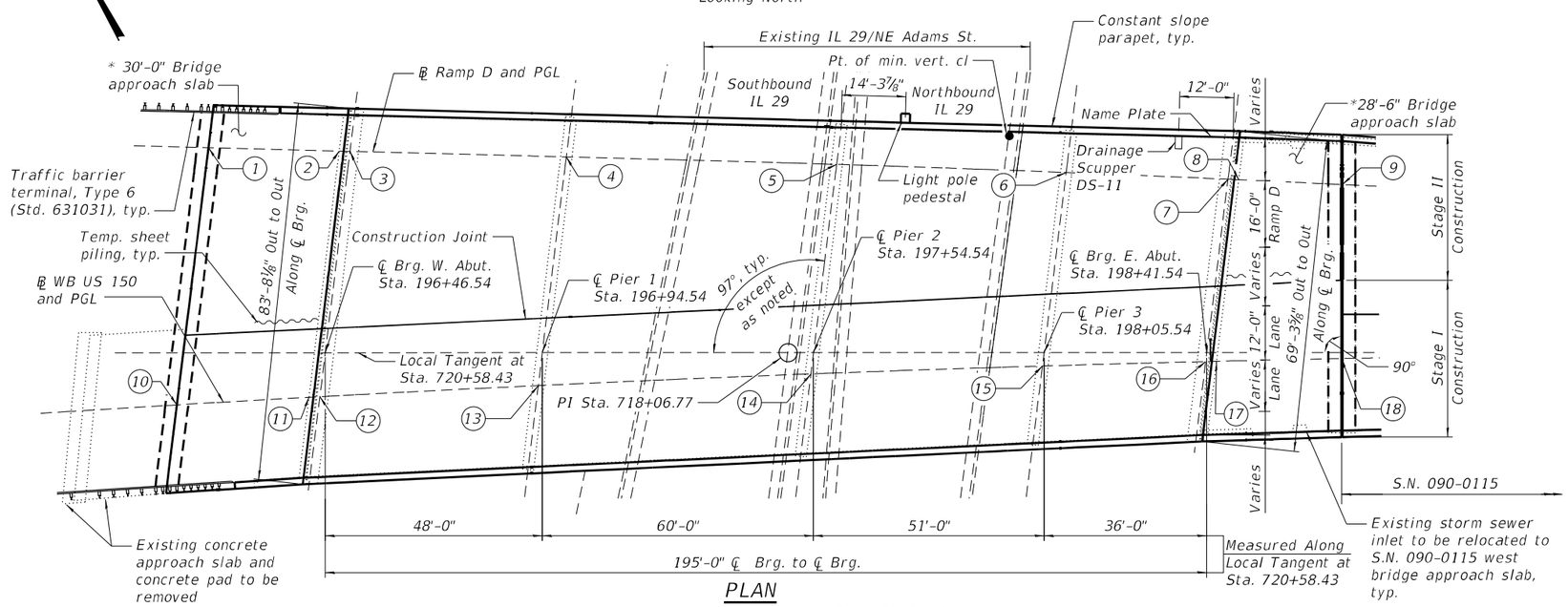

PLAN

* Measured Along Local Tangent at Sta. 720+58.43

	Location	Station	Elevation
1	End of W. Approach Slab	14+75.58	509.85
2	Bk. W. Abut.	14+46.67	509.33
3	℄ Brg. W. Abut.	14+44.26	509.28
4	℄ Brg. Pier 1	13+96.40	508.34
5	℄ Brg. Pier 2	13+36.58	507.05
6	℄ Brg. Pier 3	12+85.76	505.95
7	℄ Brg. E. Abut.	12+49.92	505.15
8	Bk. E. Abut.	12+47.55	505.09
9	End of E. Approach Slab	12+24.74	504.56

	Location	Station	Elevation
10	End of W. Approach Slab	716+71.06	511.54
11	Bk. W. Abut.	717+00.31	510.81
12	℄ Brg. W. Abut.	717+02.75	510.75
13	℄ Brg. Pier 1	717+51.11	509.54
14	℄ Brg. Pier 2	718+11.48	508.03
15	℄ Brg. Pier 3	718+62.73	506.75
16	℄ Brg. E. Abut.	718+98.86	505.85
17	Bk. E. Abut.	719+01.24	505.79
18	End of E. Approach Slab	719+28.97	505.10

SCOPE OF WORK

1. Remove parapets, deck, bridge approach slabs, top of abutment backwalls and upper portion of wingwalls.
2. Remove existing elastomeric bearings at the abutments and replace with new elastomeric bearings.
3. Reconfigure existing abutments and wingwalls to semi-integral abutment configuration.
4. Install shear connectors on beams in negative moment regions to make beams composite along their full length.
5. Construct new concrete semi-integral end diaphragms, deck, parapets, and bridge approach slabs.
6. Grind bridge deck smooth and to final elevations.
7. Clean and paint entire steel superstructure and bearings.
8. Perform epoxy crack injection and formed concrete repairs on substructure units.
9. Apply concrete sealer to abutment caps and backwalls.

DESIGN SPECIFICATIONS

2002 AASHTO Standard Specifications for Highway Bridges, 17th Edition

LOADING HS20-44

Allow 0#/sq. ft. for future wearing surface.

DESIGN STRESSES

FIELD UNITS (New Construction)

f'c = 4,000 psi
fy = 60,000 psi (Reinforcement)

FIELD UNITS (Existing Construction)

f'c = 3,500 psi
fy = 60,000 psi (Reinforcement)
fy = 50,000 psi (Structural steel)
fy = 36,000 psi (Structural steel)

SEISMIC DATA

Seismic Performance Category (SPC) = A
Horizontal Bedrock Acceleration Coefficient (A) = 0.04g
Site Coefficient (S) = 1.0

APPROVED
For Structural Adequacy Only
Engineer of Bridges & Structures

RACHEL L. MERTZ
081-006526
LICENSED STRUCTURAL ENGINEER
STATE OF ILLINOIS

RACHEL L. MERTZ, S.E.
DATE SIGNED 1/17/2025
LICENSE EXP DATE 11/30/2026

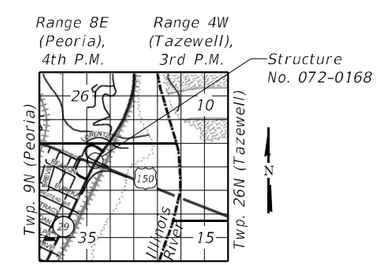

LOCATION SKETCH

GENERAL PLAN AND ELEVATION
WB US 150 & RAMP D OVER IL 29 (ADAMS ST)
F.A.P. ROUTE 317 - SEC. (14HB-1)BRR
PEORIA COUNTY
STATION 197+54.54
STRUCTURE NO. 072-0168

MODEL: Default
FILE NAME: P:\4312-WBR\CLigageRehab\CADD\Structural_SN 072-0168_Adam St_Final Plans\0720168-68E44-001-GPE.dgn

MODJESKI and MASTERS

USER NAME =	DESIGNED - YSS	REVISED -	
	CHECKED - RLM	REVISED -	
PLOT SCALE =	DRAWN - AEC	REVISED -	
PLOT DATE =	CHECKED - RLM	REVISED -	

STATE OF ILLINOIS
DEPARTMENT OF TRANSPORTATION

SHEET S1 OF S32 SHEETS

F.A.P. RTE.	SECTION	COUNTY	TOTAL SHEETS	SHEET NO.
317	(14HB-1)BRR	PEORIA	418	139

CONTRACT NO. 68E44
ILLINOIS | FED. AID PROJECT

3/7/2025 8:15:55 AM

INDEX OF SHEETS

GENERAL NOTES

Existing conduit for fiber optic utilities are attached to the underside of the bridge. Conduit is not expected to interfere with repairs and the Contractor shall take care to prevent damage to fiber optic conduit during construction. The Contractor can temporarily relocate fiber optic conduit during construction at his own expense with the approval of the Engineer. Fiber optic utilities are to remain in service during construction.

No field welding is permitted except as specified in the contract documents.

Reinforcement bars designated (E) shall be epoxy coated.

Prior to pouring the new concrete deck, all heavy or loose rust, loose mill scale, and other loose detrimental foreign material shall be removed from the surfaces in contact with concrete (SSPC-SP3 standards). Tightly adhered paint may remain unless otherwise noted. Removal shall be accomplished by methods that will not damage the steel and the cost will be paid for according to Article 109.04 of the Standard Specifications.

As directed by the Engineer, existing construction accessories welded to the top flange of beams and girders shall be removed. The weld areas shall be ground flush and inspected for cracks using magnetic particle testing (MT) or dye penetrant testing (PT) by qualified personnel approved by the Engineer. Any cracks that cannot be removed by grinding ¼ in. deep shall be identified and reported to the Bureau of Bridges & Structures for further disposition. The cost of removing welded accessories, grinding and inspecting weld areas and grinding cracks will be paid for according to Article 109.04 of the Standard Specifications.

If the Contractor elects to use cantilever forming brackets on the exterior beams or girders, the brackets shall be placed at the same locations as required for the hardwood blocks in Article 503.06(b) of the Standard Specifications. If additional cantilever forming brackets are required, hardwood blocking shall be wedged between the exterior and first interior beam at each of these additional bracket locations.

Plan dimensions and details relative to the existing structure have been taken from existing plans are subject to nominal construction variations. The Contractor shall field verify existing dimensions and details affecting new construction and make necessary approved adjustments prior to construction or ordering of materials. Such variations shall not be cause for additional compensation for a change in scope of the work, however, the Contractor will be paid for the quantity actually furnished at the unit price bid for the work.

GENERAL NOTES - CONTINUED

Cleaning and painting of the existing structural steel shall be as specified in the special provision for "Cleaning and Painting Existing Steel Structures". All beams, bearings, and other structural steel shall be cleaned per Near White Blast Cleaning-SSPC-SP10.

All exposed surfaces of the beams, bearings and other structural steel shall be painted according to the requirements of the Organic Zinc Rich Primer / Epoxy / Urethane paint system. The color of the final finish coat for all interior steel surfaces shall be Gray, Munsell No. 5B 7/1. The color of the final finish coat for the exterior and bottom flange of the fascia beams shall be Gray, Munsell No. 5B 7/1. All beams and other structural steel within the concrete diaphragm at the abutments shall receive one coat of the organic zinc-rich primer.

Containment of cleaning residue is required to control nuisance dust. See special provisions.

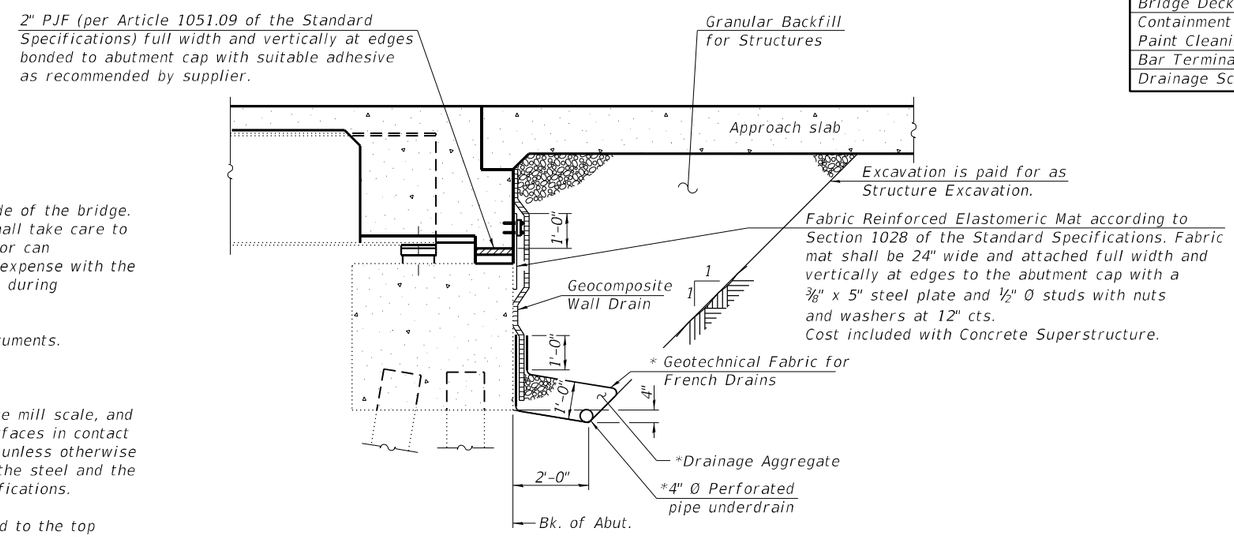

SECTION THRU SEMI-INTEGRAL ABUTMENT

(Horiz. dim. @ Rt. ∠'s)

*Included in the cost of Pipe Underdrains for Structures.

Note:
All drainage system components shall extend to the inside face of each wingwall except an outlet pipe shall extend until intersecting with the side slope of the north side of the bridge. The outlet pipe shall drain into a concrete headwall. (See Article 601.05 of the Standard Specifications and Highway Standard 601101).

TOTAL BILL OF MATERIAL

ITEM	UNIT	SUPER	SUB	TOTAL
Concrete Removal	Cu Yd	-	70.5	70.5
Removal of Existing Concrete Deck No. 1	Each	1	-	1
Protective Shield	Sq Yd	932	-	932
Structure Excavation	Cu Yd	-	184	184
Concrete Structures	Cu Yd	-	57.0	57.0
Concrete Superstructure	Cu Yd	529.8	-	529.8
Protective Coat	Sq Yd	2,293	-	2,293
Concrete Superstructure (Approach Slab)	Cu Yd	203.0	-	203.0
Stud Shear Connectors	Each	4,500	-	4,500
Reinforcement Bars, Epoxy Coated	Pound	217,430	30	217,460
Bar Splicers	Each	920	96	1,016
Name Plates	Each	1	-	1
Elastomeric Bearing Assembly, Type I	Each	20	-	20
Anchor Bolts, 3/4"	Each	80	-	80
Temporary Sheet Piling	Sq Ft	-	335	335
Granular Backfill for Structures	Cu Yd	-	184	184
Epoxy Crack Injection	Foot	-	46	46
Geocomposite Wall Drain	Sq Yd	-	107	107
Pipe Underdrains for Structures 4"	Foot	-	269	269
Jack and Remove Existing Bearings	Each	20	-	20
Cleaning and Painting Steel Bridge No. 1	L Sum	1	-	1
Diamond Grinding (Bridge Section)	Sq Yd	1,958	-	1,958
Bridge Deck Grooving (Longitudinal)	Sq Yd	1,668	-	1,668
Containment and Disposal of Non-Lead Paint Cleaning Residues No. 1	L Sum	1	-	1
Bar Terminators	Each	475	-	475
Drainage Scuppers, DS-11	Each	1	-	1

STATION 197+54.54
RE-BUILT 20_ _ BY
STATE OF ILLINOIS
F.A.P. RTE. 317 SEC. (14HB-1)BRR
LOADING HS20-44
STRUCTURE NO. 072-0168

NAME PLATE

See Std. 515001

Existing Name Plate shall be cleaned and relocated next to new Name Plate. Cost included with Name Plates.

CURVE DATA
℄ WB US 150

P.I. Sta. = 718+06.77
Δ = 4° 26' 20" (RT)
D = 0° 52' 53"
R = 6,500.00'
T = 251.91'
L = 503.57'
E = 4.88'
P.C. Sta. = 715+54.86
P.T. Sta. = 720+58.43

CURVE DATA
℄ Ramp D

P.I. Sta. = 12+29.48
Δ = 2° 31' 03" (LT)
D = 0° 52' 55"
R = 6,496.00'
T = 142.74'
L = 285.43'
E = 1.57'
P.C. Sta. = 10+86.74
P.T. Sta. = 13+72.17

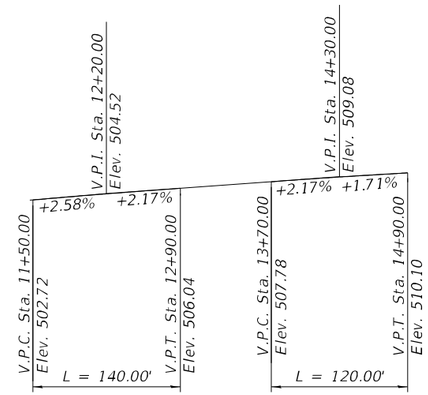

PROFILE GRADE
℄ Ramp D

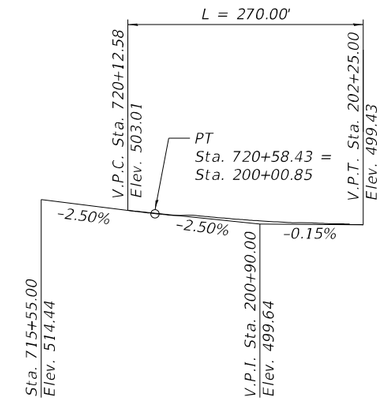

PROFILE GRADE
℄ WB US 150

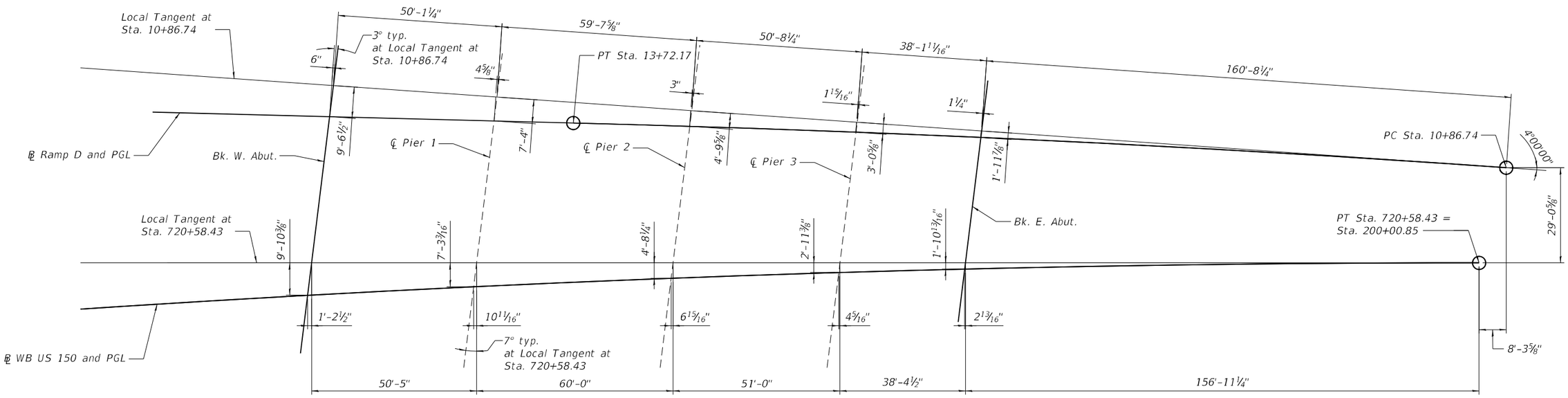

OFFSET SKETCH

Note:
Up to ¼" to be ground off the bridge deck and the bridge approach slabs. The Profile Grades show the final grade after grinding.

MODEL: Default
FILE NAME: P:\4312-WBMcCLugageRehab\CADD\Structural_SN 072-0168_Adam St_Final Plans\0720168-68E44-003-Offset-SketchProfiles.dgn

MODJESKI and MASTERS	USER NAME =	DESIGNED - YSS	REVISED -
		CHECKED - RLM	REVISED -
	PLOT SCALE =	DRAWN - AEC	REVISED -
	PLOT DATE =	CHECKED - YSS	REVISED -

STATE OF ILLINOIS
DEPARTMENT OF TRANSPORTATION

OFFSET SKETCH AND PROFILES
STRUCTURE NO. 072-0168

SHEET S3 OF S32 SHEETS

F.A.P. RTE.	SECTION	COUNTY	TOTAL SHEETS	SHEET NO.
317	(14HB-1)BRR	PEORIA	418	141
		CONTRACT NO. 68E44		
	ILLINOIS	FED. AID PROJECT		

2/12/2025 8:36:58 PM

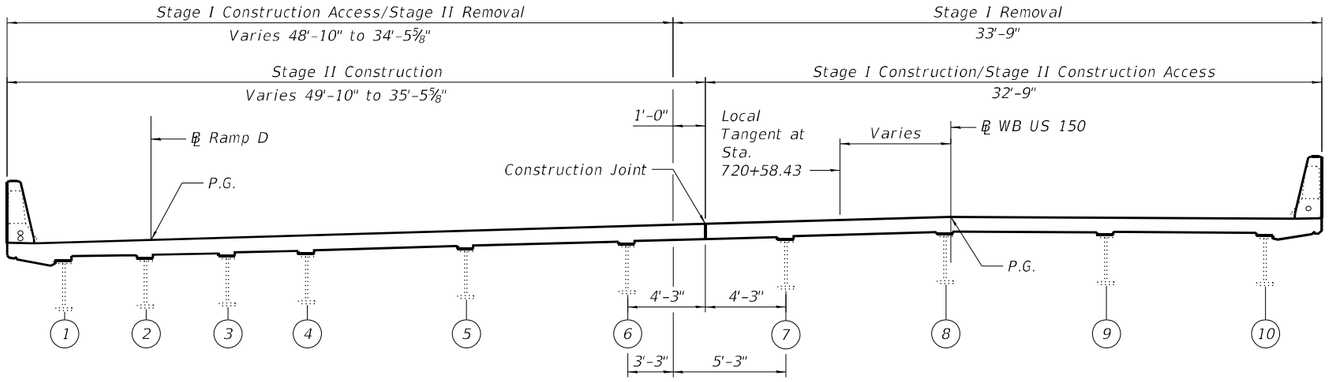

STAGE CONSTRUCTION DETAILS

Looking east

Dimensions are at end of deck perpendicular to south edge of deck.

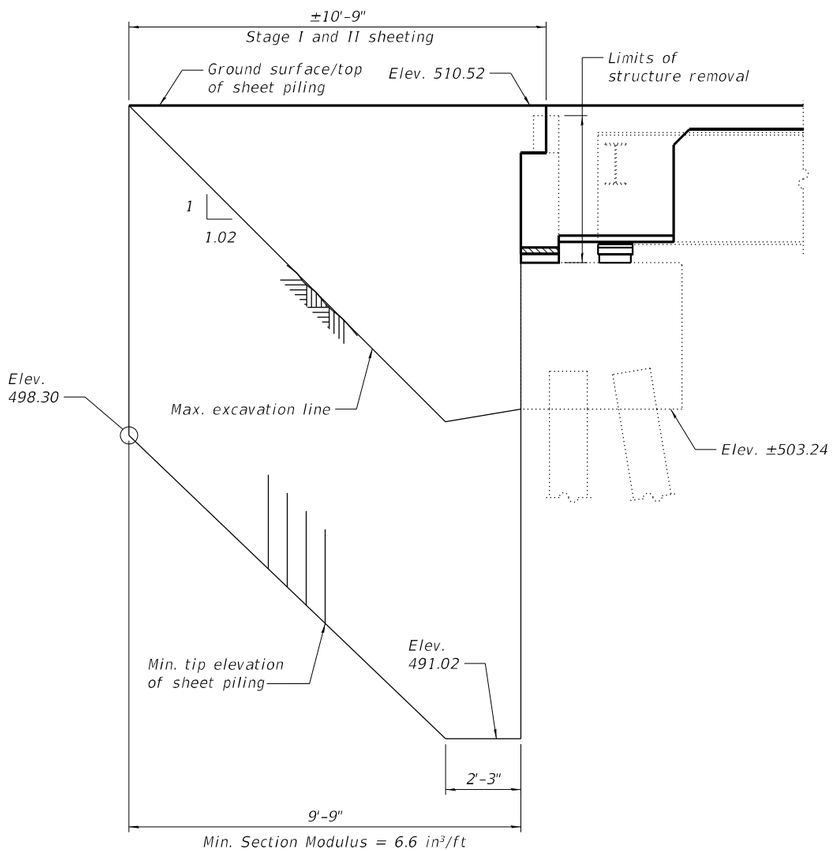

TEMPORARY SHEET PILING

At West Abutment

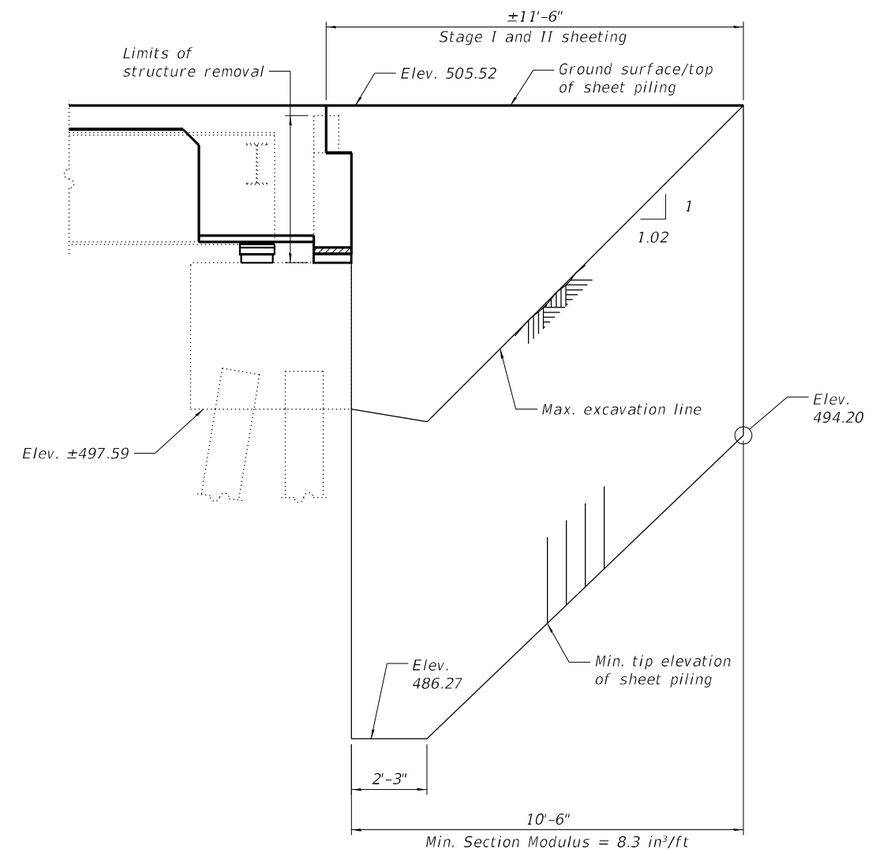

TEMPORARY SHEET PILING

At East Abutment

Note:

If the Contractor chooses to alter the temporary cantilevered sheet piling design requirements shown on the plan, a design submittal including plan details and calculations will be required for review and acceptance by the Engineer.

BILL OF MATERIAL

Item	Unit	Total
Temporary Sheet Piling	Sq. Ft.	335

MODEL: Default
FILE NAME: P:\4312-WBMxCLigageRehab\CADD\Structural_SN 072-0168_Adam St_Final Plans\0720168-68E44-004-StgConst.dgn

2/12/2025 8:37:01 PM

MODJESKI and MASTERS

USER NAME =	DESIGNED - YSS	REVISED -	
	CHECKED - RLM	REVISED -	
PLOT SCALE =	DRAWN - AEC	REVISED -	
PLOT DATE =	CHECKED - YSS	REVISED -	

STATE OF ILLINOIS
DEPARTMENT OF TRANSPORTATION

STAGE CONSTRUCTION DETAILS
STRUCTURE NO. 072-0168

SHEET S4 OF S32 SHEETS

F.A.P. RTE.	SECTION	COUNTY	TOTAL SHEETS	SHEET NO.
317	(14HB-1)BRR	PEORIA	418	142
		CONTRACT NO. 68E44		
		ILLINOIS	FED. AID PROJECT	

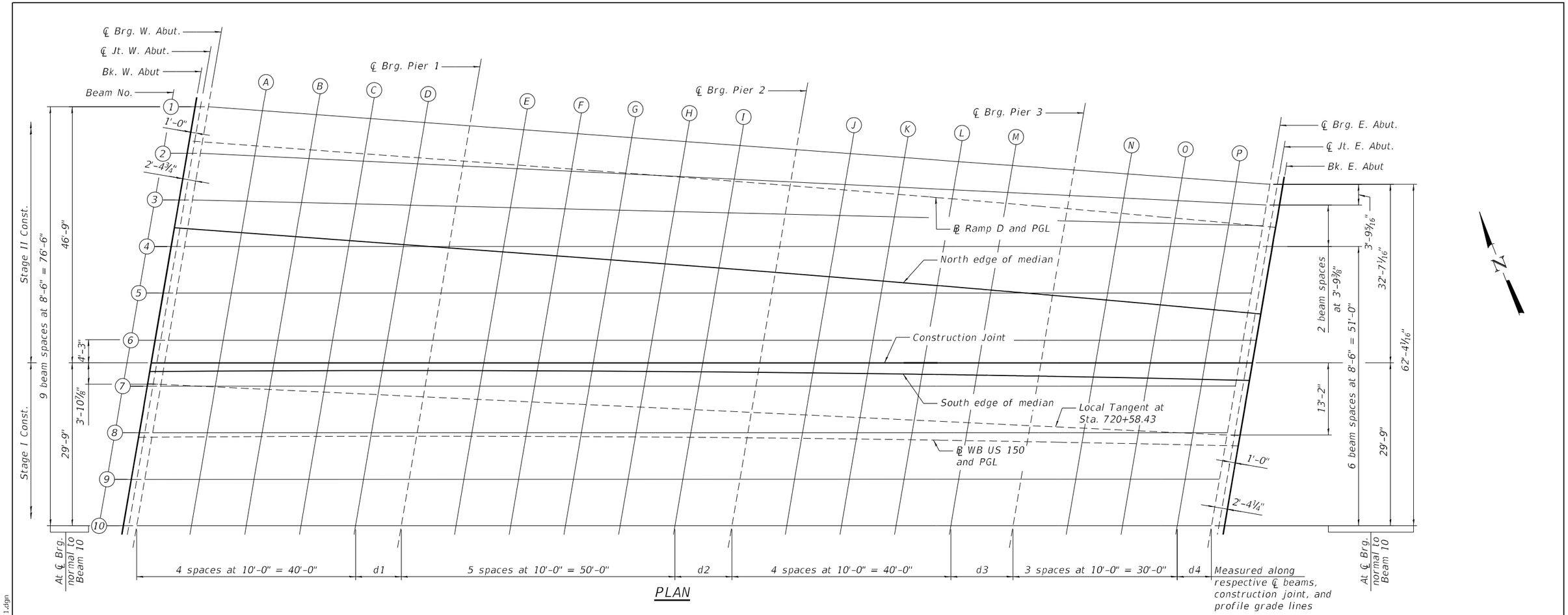

PLAN

SPAN DIMENSIONS

Location	d1	d2	d3	d4
Beam 1	7'-10⅜"	9'-10"	10'-10¼"	5'-10¾"
Beam 2	8'-0"	9'-11⅞"	10'-11⅞"	6'-0"
Beam 3	8'-1¾"	10'-2¼"	11'-1⅞"	6'-1⅜"
Beams 4 thru 10	8'-4"	10'-5"	11'-4¼"	6'-3"
℄ Ramp D and PGL	7'-10⅜"	9'-9⅞"	10'-9¾"	5'-10⅛"
Construction Joint	8'-4"	10'-5"	11'-4¼"	6'-3"
℄ WB US 150 and PGL	8'-4⅜"	10'-4½"	11'-2⅞"	6'-1⅝"

All dimensions are measured along the respective centerlines of beams, construction joint, and profile grade lines.

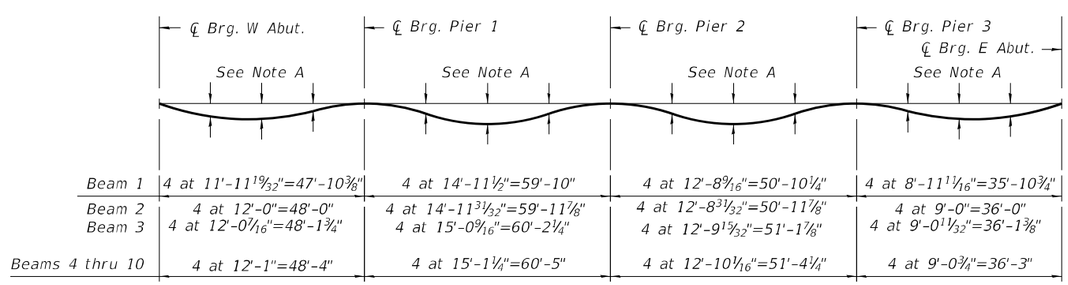

DEAD LOAD DEFLECTION DIAGRAM

(Includes weight of concrete only.)

Note:
The above deflections are not to be used in the field if the engineer is working from the grade elevations adjusted for dead load deflections and grinding as shown on sheets S6 thru S8 of S32.

Note A:
Dead Load Deflections will be provided to the Contractor in accordance with the special provision "Contractor Requirements for Dead Load Deflection and Top of Slab Elevation Data."

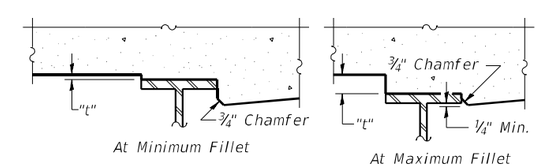

To determine "t": After all structural steel has been erected, elevations of the top flanges of the beams shall be taken at intervals shown on sheets S6 thru S8 of S32. These elevations subtracted from the "Theoretical Grade Elevations Adjusted for Dead Load Deflection and Grinding" shown on sheets S6 thru S8 of S32, minus the initial slab thickness prior to grinding, equals the fillet heights "t" above top flange of beams.

The slab is to be ground after curing to achieve smoothness, but the slab is not to be ground to elevations below the "Theoretical Grade Elevations" shown on sheets S6 thru S8 of S32. For grinding the deck, see Special Provisions.

FILLET HEIGHTS

MODEL: Default
FILE NAME: P:\4312-WBMcCluggageRehab\CADD\Structural_SN 072-0168_Adam St_Final Plans\0720168-68E44-005-TOSE1.dgn

MODJESKI and MASTERS

USER NAME =	DESIGNED - YSS	REVISED -	
	CHECKED - UB	REVISED -	
PLOT SCALE =	DRAWN - ELK	REVISED -	
PLOT DATE =	CHECKED - YSS	REVISED -	

STATE OF ILLINOIS
DEPARTMENT OF TRANSPORTATION

TOP OF SLAB ELEVATIONS - 1
STRUCTURE NO. 072-0168

SHEET S5 OF S32 SHEETS

F.A.P. RTE.	SECTION	COUNTY	TOTAL SHEETS	SHEET NO.
317	(14HB-1)BRR	PEORIA	418	143

CONTRACT NO. 68E44

ILLINOIS FED. AID PROJECT

2/12/2025 8:37:04 PM

BEAM 1

Location	Station	Offset	Theoretical Grade Elevations	Theoretical Grade Elevations Adjusted For Dead Load Deflection and Grinding
Bk. W. Abut.	14+46.05	6.47	509.08	
CL Jt. W. Abut.	14+45.04	6.47	509.07	
CL Brg. W. Abut.	14+43.64	6.47	509.04	
A	14+33.64	6.47	508.87	
B	14+23.64	6.48	508.69	
C	14+13.64	6.48	508.51	
D	14+03.64	6.49	508.33	
CL Brg. Pier 1	13+95.77	6.49	508.18	
E	13+85.77	6.50	507.99	See Note A
F	13+75.77	6.50	507.77	
G	13+65.78	6.51	507.56	
H	13+55.79	6.53	507.34	
I	13+45.80	6.57	507.12	
CL Brg. Pier 2	13+35.97	6.62	506.91	
J	13+25.98	6.69	506.69	
K	13+16.00	6.77	506.47	
L	13+06.01	6.87	506.25	
M	12+96.02	6.99	506.03	
CL Brg. Pier 3	12+85.17	7.13	505.79	
N	12+75.18	7.28	505.57	
O	12+65.20	7.44	505.34	
P	12+55.21	7.61	505.12	
CL Brg. E. Abut.	12+49.32	7.73	504.98	
CL Jt. E. Abut.	12+47.96	7.75	504.95	
Bk. E. Abut.	12+46.95	7.77	504.92	

℄ RAMP D AND PG

Location	Station	Offset	Theoretical Grade Elevations	Theoretical Grade Elevations Adjusted For Dead Load Deflection and Grinding
Bk. W. Abut.	14+46.67	0.00	509.33	
CL Jt. W. Abut.	14+45.67	0.00	509.31	
CL Brg. W. Abut.	14+44.26	0.00	509.28	
A	14+34.26	0.00	509.09	
B	14+24.26	0.00	508.90	
C	14+14.26	0.00	508.70	
D	14+04.26	0.00	508.50	
CL Brg. Pier 1	13+96.40	0.00	508.34	
E	13+86.40	0.00	508.13	See Note A
F	13+76.40	0.00	507.92	
G	13+66.40	0.00	507.70	
H	13+56.40	0.00	507.48	
I	13+46.40	0.00	507.27	
CL Brg. Pier 2	13+36.58	0.00	507.05	
J	13+26.58	0.00	506.83	
K	13+16.58	0.00	506.62	
L	13+06.58	0.00	506.40	
M	12+96.58	0.00	506.18	
CL Brg. Pier 3	12+85.76	0.00	505.95	
N	12+75.76	0.00	505.73	
O	12+65.76	0.00	505.51	
P	12+55.76	0.00	505.28	
CL Brg. E. Abut.	12+49.92	0.00	505.15	
CL Jt. E. Abut.	12+48.56	0.00	505.12	
Bk. E. Abut.	12+47.55	0.00	505.09	

BEAM 2

Location	Station	Offset	Theoretical Grade Elevations	Theoretical Grade Elevations Adjusted For Dead Load Deflection and Grinding
Bk. W. Abut.	14+46.88	-2.18	509.41	
CL Jt. W. Abut.	14+45.87	-2.15	509.39	
CL Brg. W. Abut.	14+44.47	-2.12	509.36	
A	14+34.47	-1.87	509.16	
B	14+24.47	-1.62	508.95	
C	14+14.48	-1.37	508.74	
D	14+04.48	-1.12	508.53	
CL Brg. Pier 1	13+96.49	-0.92	508.36	
E	13+86.49	-0.67	508.14	See Note A
F	13+76.49	-0.42	507.93	
G	13+66.50	-0.17	507.70	
H	13+56.50	0.10	507.48	
I	13+46.50	0.38	507.26	
CL Brg. Pier 2	13+36.51	0.68	507.04	
J	13+26.52	0.99	506.81	
K	13+16.53	1.32	506.59	
L	13+06.54	1.66	506.37	
M	12+96.55	2.02	506.14	
CL Brg. Pier 3	12+85.56	2.43	505.90	
N	12+75.57	2.82	505.67	
O	12+65.59	3.23	505.44	
P	12+55.60	3.65	505.20	
CL Brg. E. Abut.	12+49.61	3.91	505.06	
CL Jt. E. Abut.	12+48.25	3.97	505.03	
Bk. E. Abut.	12+47.24	4.01	505.01	

BEAM 3

Location	Station	Offset	Theoretical Grade Elevations	Theoretical Grade Elevations Adjusted For Dead Load Deflection and Grinding
Bk. W. Abut.	14+47.72	-10.82	509.74	
CL Jt. W. Abut.	14+46.71	-10.77	509.72	
CL Brg. W. Abut.	14+45.29	-10.70	509.69	
A	14+35.31	-10.21	509.45	
B	14+25.32	-9.72	509.21	
C	14+15.33	-9.22	508.97	
D	14+05.34	-8.73	508.73	
CL Brg. Pier 1	13+97.20	-8.33	508.54	
E	13+87.21	-7.84	508.30	See Note A
F	13+77.23	-7.34	508.08	
G	13+67.23	-6.85	507.85	
H	13+57.24	-6.34	507.63	
I	13+47.24	-5.82	507.40	
CL Brg. Pier 2	13+37.06	-5.27	507.17	
J	13+27.06	-4.72	506.94	
K	13+17.07	-4.15	506.71	
L	13+07.09	-3.56	506.48	
M	12+97.10	-2.96	506.25	
CL Brg. Pier 3	12+85.95	-2.27	506.00	
N	12+75.97	-1.64	505.77	
O	12+65.99	-0.99	505.53	
P	12+56.01	-0.33	505.29	
CL Brg. E. Abut.	12+49.91	0.08	505.15	
CL Jt. E. Abut.	12+48.54	0.18	505.11	
Bk. E. Abut.	12+47.53	0.24	505.09	

NORTH EDGE OF MEDIAN

Location	Station	Offset	Theoretical Grade Elevations	Theoretical Grade Elevations Adjusted For Dead Load Deflection and Grinding
Bk. W. Abut.	14+48.22	-16.00	509.95	
CL Jt. W. Abut.	14+47.21	-16.00	509.92	
CL Brg. W. Abut.	14+45.81	-16.00	509.89	
A	14+35.81	-16.00	509.65	
B	14+25.81	-16.00	509.41	
C	14+15.81	-16.00	509.17	
D	14+05.81	-16.00	508.92	
CL Brg. Pier 1	13+97.94	-16.00	508.73	
E	13+87.94	-16.00	508.48	See Note A
F	13+77.94	-16.00	508.27	
G	13+67.93	-16.00	508.05	
H	13+57.91	-16.00	507.84	
I	13+47.88	-16.00	507.62	
CL Brg. Pier 2	13+38.04	-16.00	507.40	
J	13+28.01	-16.00	507.19	
K	13+17.99	-16.00	506.97	
L	13+07.96	-16.00	506.75	
M	12+97.94	-16.00	506.53	
CL Brg. Pier 3	12+87.10	-16.00	506.30	
N	12+77.07	-16.00	506.08	
O	12+67.05	-16.00	505.86	
P	12+57.02	-16.00	505.63	
CL Brg. E. Abut.	12+51.16	-16.00	505.50	
CL Jt. E. Abut.	12+49.80	-16.00	505.46	
Bk. E. Abut.	12+48.79	-16.00	505.44	

Note:
Offsets for Beams 1 thru 3 and the north edge of the median are measured from the Profile Grade for ℄ Ramp D.

Note A:
Theoretical Grade Elevations Adjusted for Dead Load Deflection and Grinding will be provided to the Contractor in accordance with the special provision "Contractor Requirements for Dead Load Deflection and Top of Slab Elevation Data."

BEAM 4

Location	Station	Offset	Theoretical Grade Elevations	Theoretical Grade Elevations Adjusted For Dead Load Deflection and Grinding
Bk. W. Abut.	14+48.55	-19.46	510.03	
CL Jt. W. Abut.	14+47.54	-19.39	510.00	
CL Brg. W. Abut.	14+46.12	-19.28	509.97	
A	14+36.15	-18.55	509.72	
B	14+26.18	-17.82	509.46	
C	14+16.20	-17.08	509.20	
D	14+06.23	-16.35	508.94	
CL Brg. Pier 1	13+97.92	-15.74	508.72	
E	13+87.94	-15.01	508.46	See Note A
F	13+77.97	-14.27	508.23	
G	13+67.99	-13.54	508.00	
H	13+58.00	-12.79	507.77	
I	13+48.01	-12.03	507.54	
CL Brg. Pier 2	13+37.60	-11.22	507.30	
J	13+27.61	-10.42	507.07	
K	13+17.63	-9.62	506.83	
L	13+07.65	-8.79	506.60	
M	12+97.67	-7.95	506.37	
CL Brg. Pier 3	12+86.35	-6.98	506.10	
N	12+76.37	-6.11	505.86	
O	12+66.40	-5.22	505.63	
P	12+56.44	-4.32	505.38	
CL Brg. E. Abut.	12+50.21	-3.74	505.23	
CL Jt. E. Abut.	12+48.84	-3.62	505.20	
Bk. E. Abut.	12+47.83	-3.52	505.17	

BEAM 5

Location	Station	Offset	Theoretical Grade Elevations	Theoretical Grade Elevations Adjusted For Dead Load Deflection and Grinding
Bk. W. Abut.	14+49.38	-28.05	510.23	
CL Jt. W. Abut.	14+48.37	-27.97	510.21	
CL Brg. W. Abut.	14+46.95	-27.87	510.17	
A	14+36.98	-27.13	509.92	
B	14+27.01	-26.40	509.67	
C	14+17.03	-25.67	509.42	
D	14+07.06	-24.94	509.16	
CL Brg. Pier 1	13+98.75	-24.32	508.94	
E	13+88.77	-23.59	508.68	See Note A
F	13+78.80	-22.86	508.45	
G	13+68.82	-22.12	508.21	
H	13+58.81	-21.38	507.97	
I	13+48.81	-20.62	507.73	
CL Brg. Pier 2	13+38.39	-19.81	507.49	
J	13+28.39	-19.01	507.25	
K	13+18.39	-18.21	507.02	
L	13+08.40	-17.38	506.78	
M	12+98.41	-16.54	506.55	
CL Brg. Pier 3	12+87.06	-15.57	506.29	
N	12+77.08	-14.70	506.05	
O	12+67.10	-13.81	505.81	
P	12+57.12	-12.91	505.57	
CL Brg. E. Abut.	12+50.88	-12.34	505.42	
CL Jt. E. Abut.	12+49.50	-12.21	505.38	
Bk. E. Abut.	12+48.49	-12.12	505.36	

BEAM 6

Location	Station	Offset	Theoretical Grade Elevations	Theoretical Grade Elevations Adjusted For Dead Load Deflection and Grinding
Bk. W. Abut.	14+50.21	-36.63	510.44	
CL Jt. W. Abut.	14+49.20	-36.56	510.41	
CL Brg. W. Abut.	14+47.78	-36.45	510.38	
A	14+37.81	-35.72	510.13	
B	14+27.84	-34.99	509.88	
C	14+17.86	-34.25	509.63	
D	14+07.89	-33.52	509.38	
CL Brg. Pier 1	13+99.58	-32.91	509.16	
E	13+89.60	-32.17	508.91	See Note A
F	13+79.63	-31.44	508.67	
G	13+69.64	-30.71	508.42	
H	13+59.63	-29.96	508.17	
I	13+49.61	-29.20	507.93	
CL Brg. Pier 2	13+39.17	-28.39	507.67	
J	13+29.16	-27.60	507.43	
K	13+19.15	-26.80	507.18	
L	13+09.15	-25.97	506.94	
M	12+99.14	-25.14	506.70	
CL Brg. Pier 3	12+87.78	-24.17	506.42	
N	12+77.78	-23.30	506.18	
O	12+67.79	-22.41	505.94	
P	12+57.80	-21.51	505.70	
CL Brg. E. Abut.	12+51.55	-20.94	505.55	
CL Jt. E. Abut.	12+50.17	-20.81	505.51	
Bk. E. Abut.	12+49.16	-20.72	505.49	

CONSTRUCTION JOINT

Location	Station	Offset	Theoretical Grade Elevations	Theoretical Grade Elevations Adjusted For Dead Load Deflection and Grinding
Bk. W. Abut.	717+02.74	-13.57	510.54	
CL Jt. W. Abut.	717+03.75	-13.56	510.51	
CL Brg. W. Abut.	717+05.16	-13.55	510.48	
A	717+15.14	-13.49	510.23	
B	717+25.12	-13.45	509.98	
C	717+35.10	-13.42	509.73	
D	717+45.08	-13.40	509.48	
CL Brg. Pier 1	717+53.40	-13.40	509.27	
E	717+63.38	-13.42	509.02	See Note A
F	717+73.36	-13.45	508.77	
G	717+83.34	-13.49	508.53	
H	717+93.32	-13.55	508.28	
I	718+03.30	-13.62	508.03	
CL Brg. Pier 2	718+13.69	-13.72	507.77	
J	718+23.67	-13.82	507.52	
K	718+33.65	-13.95	507.27	
L	718+43.63	-14.08	507.02	
M	718+53.60	-14.24	506.77	
CL Brg. Pier 3	718+64.94	-14.43	506.49	
N	718+74.91	-14.61	506.24	
O	718+84.89	-14.81	506.00	
P	718+94.86	-15.03	505.75	
CL Brg. E. Abut.	719+01.10	-15.17	505.59	
CL Jt. E. Abut.	719+02.47	-15.20	505.56	
Bk. E. Abut.	719+03.48	-15.23	505.53	

SOUTH EDGE OF MEDIAN

Location	Station	Offset	Theoretical Grade Elevations	Theoretical Grade Elevations Adjusted For Dead Load Deflection and Grinding
Bk. W. Abut.	717+02.45	-12.00	510.58	
CL Jt. W. Abut.	717+03.47	-12.00	510.55	
CL Brg. W. Abut.	717+04.89	-12.00	510.52	
A	717+14.87	-12.00	510.27	
B	717+24.85	-12.00	510.02	
C	717+34.83	-12.00	509.77	
D	717+44.81	-12.00	509.52	
CL Brg. Pier 1	717+53.16	-12.00	509.31	
E	717+63.14	-12.00	509.06	See Note A
F	717+73.12	-12.00	508.81	
G	717+83.11	-12.00	508.56	
H	717+93.09	-12.00	508.31	
I	718+03.07	-12.00	508.06	
CL Brg. Pier 2	718+13.42	-12.00	507.81	
J	718+23.40	-12.00	507.56	
K	718+33.38	-12.00	507.31	
L	718+43.36	-12.00	507.06	
M	718+53.34	-12.00	506.81	
CL Brg. Pier 3	718+64.56	-12.00	506.53	
N	718+74.55	-12.00	506.28	
O	718+84.53	-12.00	506.03	
P	718+94.51	-12.00	505.78	
CL Brg. E. Abut.	719+00.63	-12.00	505.63	
CL Jt. E. Abut.	719+02.00	-12.00	505.59	
Bk. E. Abut.	719+03.01	-12.00	505.57	

Note:
Offsets for Beams 4 thru 6 are measured from the Profile Grade for ℄ Ramp D. Offsets for the construction joint and the south edge of median are measured from the Profile Grade for ℄ WB US 150.

Note A:
Theoretical Grade Elevations Adjusted for Dead Load Deflection and Grinding will be provided to the Contractor in accordance with the special provision "Contractor Requirements for Dead Load Deflection and Top of Slab Elevation Data."

BEAM 7

Location	Station	Offset	Theoretical Grade Elevations	Theoretical Grade Elevations Adjusted For Dead Load Deflection and Grinding
Bk. W. Abut.	717+01.98	-9.33	510.63	
CL Jt. W. Abut.	717+02.99	-9.32	510.60	
CL Brg. W. Abut.	717+04.41	-9.31	510.57	
A	717+14.39	-9.25	510.32	
B	717+24.38	-9.20	510.07	
C	717+34.36	-9.17	509.82	
D	717+44.35	-9.15	509.57	
CL Brg. Pier 1	717+52.68	-9.15	509.37	
E	717+62.66	-9.17	509.12	See Note A
F	717+72.65	-9.19	508.87	
G	717+82.63	-9.24	508.62	
H	717+92.62	-9.29	508.37	
I	718+02.60	-9.37	508.12	
CL Brg. Pier 2	718+13.01	-9.46	507.85	
J	718+22.99	-9.57	507.60	
K	718+32.98	-9.69	507.35	
L	718+42.96	-9.82	507.10	
M	718+52.95	-9.97	506.85	
CL Brg. Pier 3	718+64.28	-10.17	506.56	
N	718+74.27	-10.35	506.31	
O	718+84.25	-10.55	506.06	
P	718+94.23	-10.76	505.81	
CL Brg. E. Abut.	719+00.47	-10.91	505.65	
CL Jt. E. Abut.	719+01.84	-10.94	505.61	
Bk. E. Abut.	719+02.86	-10.96	505.59	

BEAM 8

Location	Station	Offset	Theoretical Grade Elevations	Theoretical Grade Elevations Adjusted For Dead Load Deflection and Grinding
Bk. W. Abut.	717+00.46	-0.84	510.79	
CL Jt. W. Abut.	717+01.47	-0.83	510.77	
CL Brg. W. Abut.	717+02.89	-0.82	510.73	
A	717+12.89	-0.76	510.49	
B	717+22.89	-0.71	510.24	
C	717+32.89	-0.67	509.99	
D	717+42.89	-0.66	509.74	
CL Brg. Pier 1	717+51.22	-0.65	509.53	
E	717+61.22	-0.66	509.28	See Note A
F	717+71.22	-0.69	509.03	
G	717+81.22	-0.73	508.78	
H	717+91.22	-0.79	508.53	
I	718+01.22	-0.86	508.28	
CL Brg. Pier 2	718+11.64	-0.95	508.02	
J	718+21.63	-1.05	507.76	
K	718+31.63	-1.17	507.51	
L	718+41.63	-1.30	507.26	
M	718+51.63	-1.45	507.01	
CL Brg. Pier 3	718+62.98	-1.64	506.72	
N	718+72.97	-1.82	506.47	
O	718+82.97	-2.02	506.22	
P	718+92.96	-2.23	505.97	
CL Brg. E. Abut.	718+99.21	-2.37	505.81	
CL Jt. E. Abut.	719+00.59	-2.41	505.77	
Bk. E. Abut.	719+01.60	-2.43	505.75	

℄ WB US 150 AND PG

Location	Station	Offset	Theoretical Grade Elevations	Theoretical Grade Elevations Adjusted For Dead Load Deflection and Grinding
Bk. W. Abut.	717+00.31	0.00	510.81	
CL Jt. W. Abut.	717+01.32	0.00	510.79	
CL Brg. W. Abut.	717+02.75	0.00	510.75	
A	717+12.75	0.00	510.50	
B	717+22.75	0.00	510.25	
C	717+32.75	0.00	510.00	
D	717+42.75	0.00	509.75	
CL Brg. Pier 1	717+51.11	0.00	509.54	
E	717+61.11	0.00	509.29	See Note A
F	717+71.11	0.00	509.04	
G	717+81.11	0.00	508.79	
H	717+91.11	0.00	508.54	
I	718+01.11	0.00	508.29	
CL Brg. Pier 2	718+11.48	0.00	508.03	
J	718+21.48	0.00	507.78	
K	718+31.48	0.00	507.53	
L	718+41.48	0.00	507.28	
M	718+51.48	0.00	507.04	
CL Brg. Pier 3	718+62.73	0.00	506.75	
N	718+72.73	0.00	506.50	
O	718+82.73	0.00	506.25	
P	718+92.73	0.00	506.00	
CL Brg. E. Abut.	718+98.86	0.00	505.85	
CL Jt. E. Abut.	719+00.23	0.00	505.82	
Bk. E. Abut.	719+01.24	0.00	505.79	

BEAM 9

Location	Station	Offset	Theoretical Grade Elevations	Theoretical Grade Elevations Adjusted For Dead Load Deflection and Grinding
Bk. W. Abut.	716+98.94	7.65	510.73	
CL Jt. W. Abut.	716+99.95	7.66	510.70	
CL Brg. W. Abut.	717+01.37	7.67	510.67	
A	717+11.38	7.74	510.42	
B	717+21.40	7.79	510.17	
C	717+31.41	7.82	509.92	
D	717+41.42	7.84	509.67	
CL Brg. Pier 1	717+49.77	7.85	509.46	
E	717+59.78	7.84	509.21	See Note A
F	717+69.79	7.82	508.96	
G	717+79.80	7.78	508.71	
H	717+89.81	7.72	508.46	
I	717+99.83	7.65	508.21	
CL Brg. Pier 2	718+10.26	7.57	507.95	
J	718+20.27	7.46	507.70	
K	718+30.28	7.35	507.45	
L	718+40.29	7.22	507.21	
M	718+50.30	7.07	506.96	
CL Brg. Pier 3	718+61.67	6.88	506.68	
N	718+71.68	6.70	506.43	
O	718+81.69	6.51	506.18	
P	718+91.69	6.30	505.94	
CL Brg. E. Abut.	718+97.95	6.16	505.78	
CL Jt. E. Abut.	718+99.33	6.13	505.75	
Bk. E. Abut.	719+00.34	6.10	505.72	

BEAM 10

Location	Station	Offset	Theoretical Grade Elevations	Theoretical Grade Elevations Adjusted For Dead Load Deflection and Grinding
Bk. W. Abut.	716+97.41	16.14	510.62	
CL Jt. W. Abut.	716+98.43	16.15	510.59	
CL Brg. W. Abut.	716+99.85	16.16	510.56	
A	717+09.87	16.23	510.31	
B	717+19.90	16.28	510.05	
C	717+29.92	16.32	509.80	
D	717+39.95	16.34	509.55	
CL Brg. Pier 1	717+48.31	16.35	509.34	
E	717+58.33	16.34	509.09	See Note A
F	717+68.36	16.32	508.84	
G	717+78.38	16.28	508.59	
H	717+88.41	16.23	508.34	
I	717+98.43	16.16	508.09	
CL Brg. Pier 2	718+08.88	16.08	507.83	
J	718+18.90	15.98	507.59	
K	718+28.93	15.87	507.34	
L	718+38.95	15.74	507.09	
M	718+48.97	15.59	506.84	
CL Brg. Pier 3	718+60.36	15.41	506.56	
N	718+70.38	15.23	506.32	
O	718+80.40	15.04	506.07	
P	718+90.42	14.83	505.82	
CL Brg. E. Abut.	718+96.69	14.69	505.67	
CL Jt. E. Abut.	718+98.07	14.66	505.63	
Bk. E. Abut.	718+99.08	14.63	505.61	

Note:
Offsets for Beams 7 thru 10 are measured from the Profile Grade for ℄ WB US 150.

Note A:
Theoretical Grade Elevations Adjusted for Dead Load Deflection and Grinding will be provided to the Contractor in accordance with the special provision "Contractor Requirements for Dead Load Deflection and Top of Slab Elevation Data."

NORTH EDGE OF SHOULDER

Location	Station	Offset	Theoretical Grade Elevations	Theoretical Grade Elevations Adjusted For Grinding
W. End West Appr. Pav't.	14+74.81	8.04	509.48	509.50
A1	14+64.83	8.04	509.33	509.35
A2	14+54.86	8.05	509.17	509.19
E. End West Appr. Pav't.	14+44.89	8.05	509.01	509.03

℄ RAMP D AND PG

Location	Station	Offset	Theoretical Grade Elevations	Theoretical Grade Elevations Adjusted For Grinding
W. End West Appr. Pav't.	14+75.58	0.00	509.85	509.87
A1	14+65.61	0.00	509.68	509.70
A2	14+55.64	0.00	509.49	509.52
E. End West Appr. Pav't.	14+45.67	0.00	509.31	509.33

NORTH EDGE OF MEDIAN

Location	Station	Offset	Theoretical Grade Elevations	Theoretical Grade Elevations Adjusted For Grinding
W. End West Appr. Pav't.	14+77.13	-16.00	510.60	510.63
A1	14+67.16	-16.00	510.38	510.40
A2	14+57.18	-16.00	510.15	510.17
E. End West Appr. Pav't.	14+47.21	-16.00	509.92	509.94

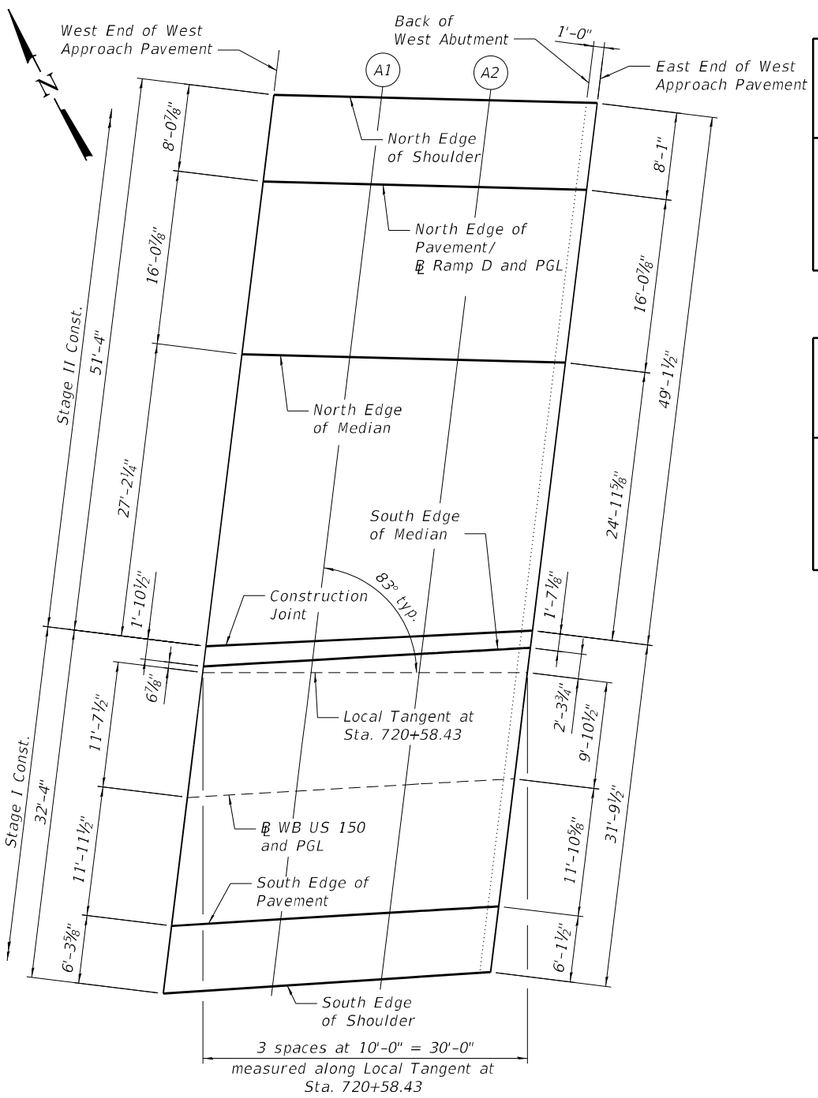

PLAN - WEST APPROACH

CONSTRUCTION JOINT

Location	Station	Offset	Theoretical Grade Elevations	Theoretical Grade Elevations Adjusted For Grinding
W. End West Appr. Pav't.	716+73.60	-13.85	511.26	511.28
A1	716+83.65	-13.74	511.01	511.03
A2	716+93.70	-13.64	510.76	510.78
E. End West Appr. Pav't.	717+03.75	-13.56	510.51	510.54

SOUTH EDGE OF MEDIAN

Location	Station	Offset	Theoretical Grade Elevations	Theoretical Grade Elevations Adjusted For Grinding
W. End West Appr. Pav't.	716+73.26	-12.00	511.31	511.33
A1	716+83.34	-12.00	511.05	511.08
A2	716+93.40	-12.00	510.80	510.82
E. End West Appr. Pav't.	717+03.47	-12.00	510.55	510.57

℄ WB US 150 AND PG

Location	Station	Offset	Theoretical Grade Elevations	Theoretical Grade Elevations Adjusted For Grinding
W. End West Appr. Pav't.	716+71.06	0.00	511.54	511.56
A1	716+81.15	0.00	511.29	511.31
A2	716+91.24	0.00	511.04	511.06
E. End West Appr. Pav't.	717+01.32	0.00	510.79	510.81

SOUTH EDGE OF PAVEMENT

Location	Station	Offset	Theoretical Grade Elevations	Theoretical Grade Elevations Adjusted For Grinding
W. End West Appr. Pav't.	716+68.90	11.76	511.42	511.44
A1	716+79.01	11.74	511.17	511.19
A2	716+89.12	11.72	510.91	510.94
E. End West Appr. Pav't.	716+99.23	11.70	510.66	510.68

SOUTH EDGE OF SHOULDER

Location	Station	Offset	Theoretical Grade Elevations	Theoretical Grade Elevations Adjusted For Grinding
W. End West Appr. Pav't.	716+67.75	17.96	511.32	511.34
A1	716+77.88	17.89	511.07	511.09
A2	716+88.01	17.82	510.82	510.84
E. End West Appr. Pav't.	716+98.14	17.72	510.57	510.59

Note:
Offsets for the north edges of the shoulder, pavement and median are measured from the Profile Grade for ℄ Ramp D. Offsets for the construction joint and south edges of the median, pavement, and shoulder are measured from the Profile Grade for ℄ WB US 150.

MODEL: Default
FILE NAME: P:\4312-WBMcCluggageRehab\CADD\Structural_SN 072-0168_Adam St_Final Plans\0720168-68E44-009-TOA5_1.dgn
2/12/2025 8:37:21 PM

MODJESKI and MASTERS

USER NAME =	DESIGNED - YSS	REVISED -	
	CHECKED - UB	REVISED -	
PLOT SCALE =	DRAWN - AEC	REVISED -	
PLOT DATE =	CHECKED - YSS	REVISED -	

STATE OF ILLINOIS
DEPARTMENT OF TRANSPORTATION

TOP OF APPROACH SLAB ELEVATIONS - 1
STRUCTURE NO. 072-0168

SHEET S9 OF S32 SHEETS

F.A.P. RTE.	SECTION	COUNTY	TOTAL SHEETS	SHEET NO.
317	(14HB-1)BRR	PEORIA	418	147
		CONTRACT NO. 68E44		
	ILLINOIS	FED. AID PROJECT		

NORTH EDGE OF SHOULDER

Location	Station	Offset	Theoretical Grade Elevations	Theoretical Grade Elevations Adjusted For Grinding
W. End East Appr. Pav't.	12+47.83	9.34	504.91	504.93
A3	12+37.89	9.44	504.68	504.70
A4	12+27.94	9.56	504.45	504.47
E. End East Appr. Pav't.	12+25.21	9.59	504.38	504.40

NORTH EDGE OF PAVEMENT/℄ RAMP D AND PG

Location	Station	Offset	Theoretical Grade Elevations	Theoretical Grade Elevations Adjusted For Grinding
W. End East Appr. Pav't.	12+48.56	0.00	505.12	505.14
A3	12+38.60	0.00	504.89	504.91
A4	12+28.65	0.00	504.65	504.68
E. End East Appr. Pav't.	12+24.74	0.00	504.56	504.58

NORTH EDGE OF MEDIAN

Location	Station	Offset	Theoretical Grade Elevations	Theoretical Grade Elevations Adjusted For Grinding
W. End East Appr. Pav't.	12+49.80	-16.00	505.46	505.49
A3	12+39.82	-16.00	505.23	505.26
A4	12+29.84	-16.00	505.00	505.02
E. End East Appr. Pav't.	12+23.96	-16.00	504.86	504.88

CONSTRUCTION JOINT

Location	Station	Offset	Theoretical Grade Elevations	Theoretical Grade Elevations Adjusted For Grinding
W. End East Appr. Pav't.	719+02.47	-15.20	505.56	505.58
A3	719+12.52	-15.45	505.31	505.33
A4	719+22.56	-15.71	505.06	505.08
E. End East Appr. Pav't.	719+29.29	-15.89	504.90	504.92

SOUTH EDGE OF MEDIAN

Location	Station	Offset	Theoretical Grade Elevations	Theoretical Grade Elevations Adjusted For Grinding
W. End East Appr. Pav't.	719+02.00	-12.00	505.59	505.61
A3	719+12.01	-12.00	505.34	505.36
A4	719+22.02	-12.00	505.09	505.11
E. End East Appr. Pav't.	719+29.21	-12.00	504.91	504.93

℄ WB US 150 AND PG

Location	Station	Offset	Theoretical Grade Elevations	Theoretical Grade Elevations Adjusted For Grinding
W. End East Appr. Pav't.	719+00.23	0.00	505.82	505.84
A3	719+10.27	0.00	505.57	505.59
A4	719+20.29	0.00	505.32	505.34
E. End East Appr. Pav't.	719+28.97	0.00	505.10	505.12

SOUTH EDGE OF PAVEMENT

Location	Station	Offset	Theoretical Grade Elevations	Theoretical Grade Elevations Adjusted For Grinding
W. End East Appr. Pav't.	718+98.56	11.30	505.69	505.71
A3	719+08.62	11.28	505.44	505.46
A4	719+18.67	11.26	505.19	505.21
E. End East Appr. Pav't.	719+28.75	11.24	504.94	504.96

SOUTH EDGE OF SHOULDER

Location	Station	Offset	Theoretical Grade Elevations	Theoretical Grade Elevations Adjusted For Grinding
W. End East Appr. Pav't.	718+97.83	16.25	505.61	505.63
A3	719+07.90	16.17	505.36	505.38
A4	719+17.97	16.07	505.11	505.13
E. End East Appr. Pav't.	719+28.65	15.96	504.84	504.86

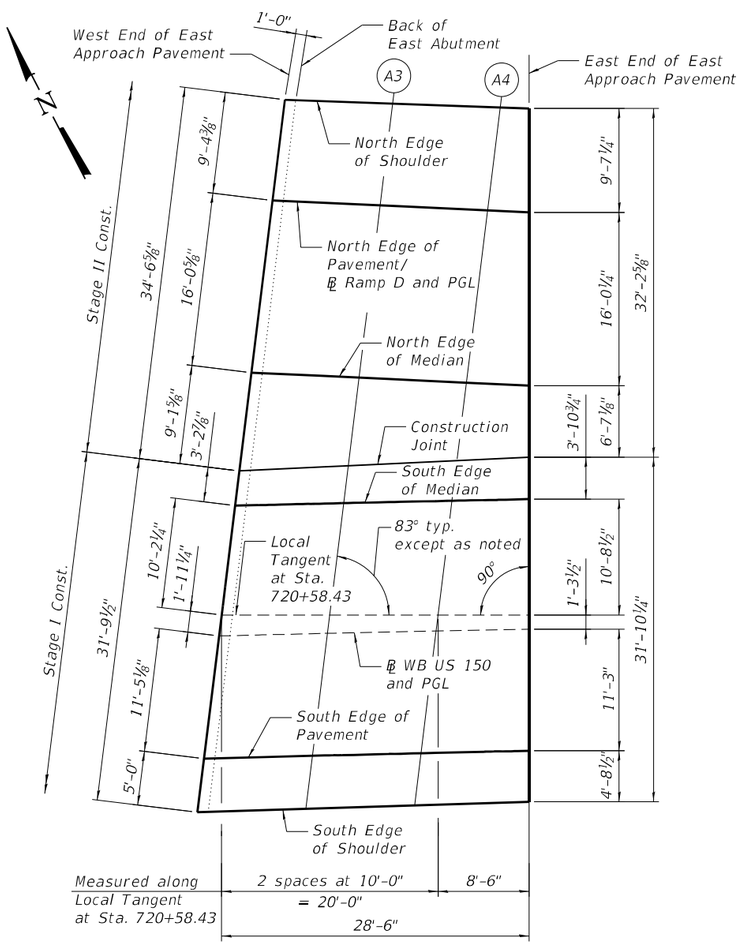

PLAN - EAST APPROACH

Note:
Offsets for the north edges of the shoulder, pavement and median are measured from the Profile Grade for ℄ Ramp D. Offsets for the construction joint and south edges of the median, pavement, and shoulder are measured from the Profile Grade for ℄ WB US 150.

MODEL: Default
FILE NAME: P:\4312-VBM\CLingageRehab\CADD\Structural_SN 072-0168_Adam St_Final Plans\0720168-68E44-010-TOAS_2.dgn
2/12/2025 8:37:25 PM

MODJESKI and MASTERS

USER NAME =	DESIGNED - YSS	REVISED -	
	CHECKED - UB	REVISED -	
PLOT SCALE =	DRAWN - AEC	REVISED -	
PLOT DATE =	CHECKED - YSS	REVISED -	

STATE OF ILLINOIS
DEPARTMENT OF TRANSPORTATION

TOP OF APPROACH SLAB ELEVATIONS - 2
STRUCTURE NO. 072-0168

SHEET S10 OF S32 SHEETS

F.A.P. RTE.	SECTION	COUNTY	TOTAL SHEETS	SHEET NO.
317	(14HB-1)BRR	PEORIA	418	148
		CONTRACT NO. 68E44		
		ILLINOIS FED. AID PROJECT		

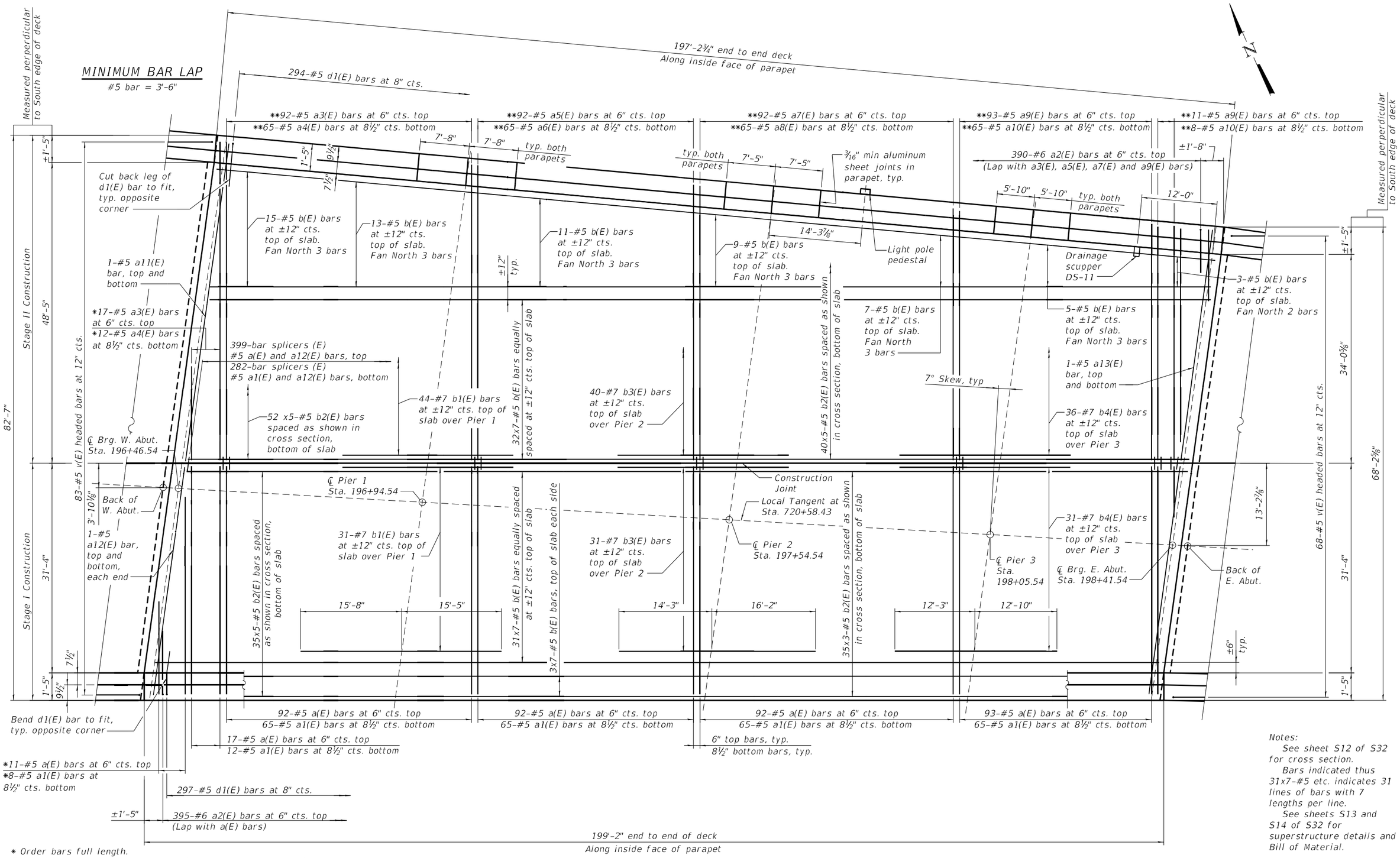

Notes:
See sheet S12 of S32 for cross section.
Bars indicated thus 31x7-#5 etc. indicates 31 lines of bars with 7 lengths per line.
See sheets S13 and S14 of S32 for superstructure details and Bill of Material.

* Order bars full length.
Cut to fit skew and use remainder of bars in opposite end of deck.
Only 12 of the cut a3(E) bars and 9 of the cut a4(E) bars will be needed at the opposite end.

** Trim bars in field to fit.

MODEL: Default
FILE NAME: P:\4312-WBM\CDigageRehab\CADD\Structural_SN 072-0168_Adam St_Final Plans\0720168-68E44-011-Sup_Slab.dgn
2/12/2025 8:37:29 PM

MODJESKI and MASTERS

USER NAME =	DESIGNED - YJ	REVISED -	
	CHECKED - UB	REVISED -	
PLOT SCALE =	DRAWN - AEC	REVISED -	
PLOT DATE =	CHECKED - UB	REVISED -	

STATE OF ILLINOIS
DEPARTMENT OF TRANSPORTATION

SUPERSTRUCTURE - SLAB
STRUCTURE NO. 072-0168

SHEET S11 OF S32 SHEETS

F.A.P. RTE.	SECTION	COUNTY	TOTAL SHEETS	SHEET NO.
317	(14HB-1)BRR	PEORIA	418	149
		CONTRACT NO. 68E44		
		ILLINOIS	FED. AID PROJECT	

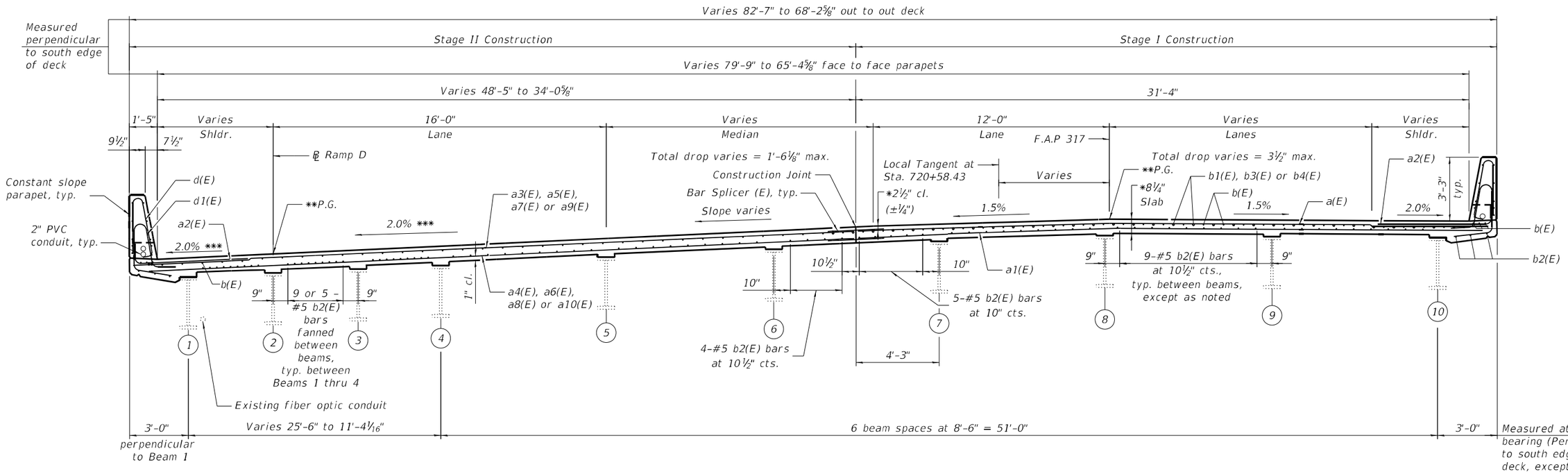

NEAR MIDSPAN

(Section shown at east end of bridge, other sections similar)

NEAR PIER

CROSS SECTION

(Looking East)

* Prior to grinding

** After grinding

*** Superelevation transition begins at Sta. 13+90.00 to match the existing 5.18% slope at Sta. 15+00.00

Note:
See sheets S13 and S14 of S32 for superstructure details and Bill of Material.

MODEL: Default
FILE NAME: P:\4312-WBMcCLugageRehab\CADD\Structural_SN 072-0168_Adam St_Final Plans\0720168-68E44-012-Sup_Details1.dgn
2/12/2025 8:37:38 PM

MODJESKI and MASTERS

USER NAME =	DESIGNED - YJ	REVISED -	
	CHECKED - UB	REVISED -	
PLOT SCALE =	DRAWN - AEC	REVISED -	
PLOT DATE =	CHECKED - UB	REVISED -	

STATE OF ILLINOIS
DEPARTMENT OF TRANSPORTATION

SUPERSTRUCTURE DETAILS - 1
STRUCTURE NO. 072-0168

SHEET S12 OF S32 SHEETS

F.A.P. RTE.	SECTION	COUNTY	TOTAL SHEETS	SHEET NO.
317	(14HB-1)BRR	PEORIA	418	150
		CONTRACT NO. 68E44		
	ILLINOIS	FED. AID PROJECT		

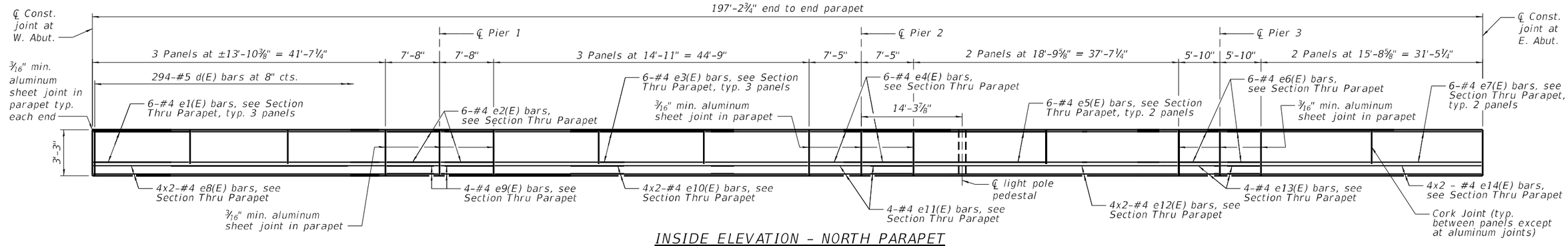

INSIDE ELEVATION - NORTH PARAPET

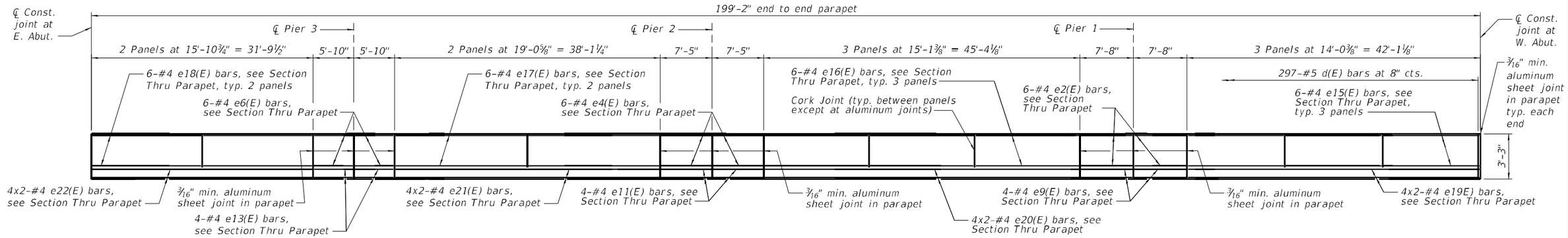

INSIDE ELEVATION - SOUTH PARAPET

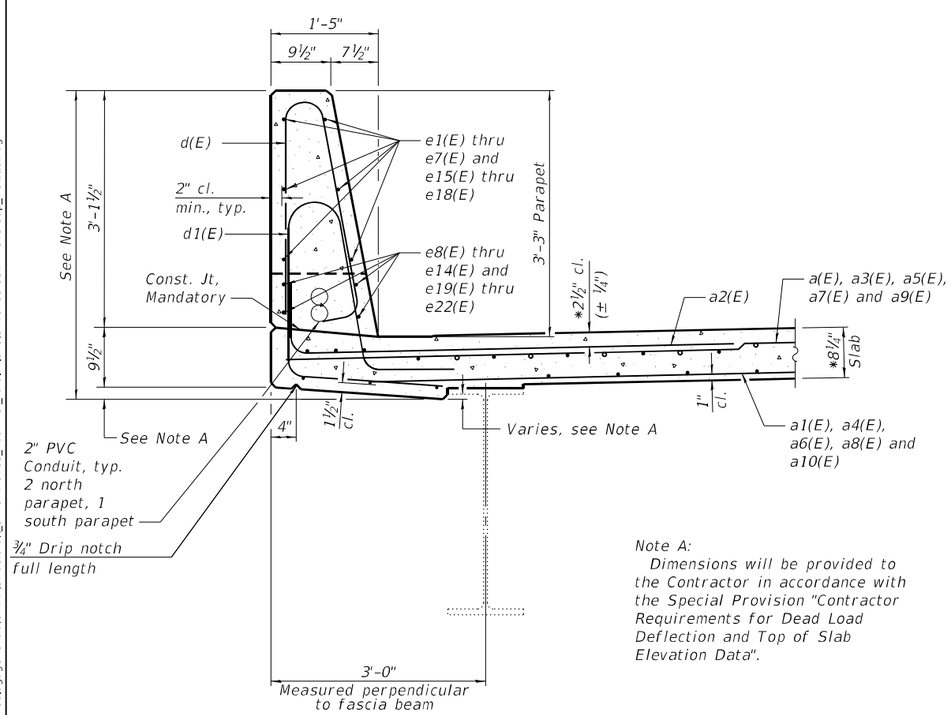

Note A:
Dimensions will be provided to the Contractor in accordance with the Special Provision "Contractor Requirements for Dead Load Deflection and Top of Slab Elevation Data".

* Prior to grinding

SECTION THRU PARAPET

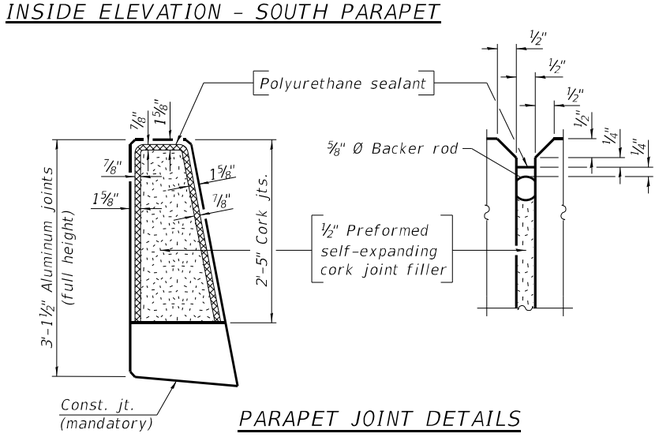

PARAPET JOINT DETAILS

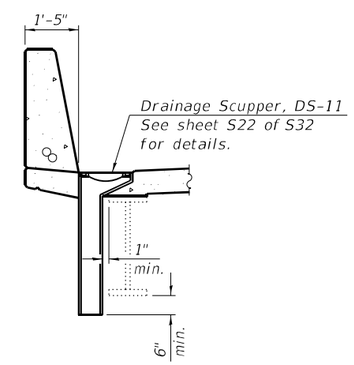

SECTION A-A

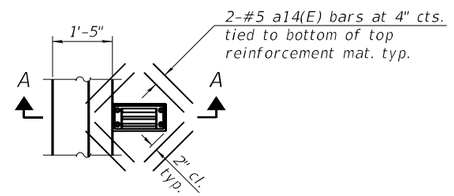

DRAINAGE SCUPPER REINFORCEMENT

1 location required
Note: Cut longitudinal reinforcement to clear drainage scuppers.

MINIMUM BAR LAP

#4 bar = 2'-5"

Notes:
The 3/16" min. aluminum sheet shall be ASTM B 209 alloy 3003-H14 and coated with 5 mils of either bitumen paint or epoxy paint to minimize reaction with wet concrete. Cost included with Concrete Superstructure.
The polyurethane sealant shall be according to Article 1050.04 of the Std. Spec. and the color shall be gray.

MODEL: Default
FILE NAME: P:\4312-WBM\CLigageRehab\CADD\Structural_SN 072-0168_Adam St_Final Plans\0720168-68E44-013-Sup_Details2.dgn

MODJESKI and MASTERS

USER NAME =	DESIGNED - YJ	REVISED -	
	CHECKED - UB	REVISED -	
PLOT SCALE =	DRAWN - AEC	REVISED -	
PLOT DATE =	CHECKED - UB	REVISED -	

STATE OF ILLINOIS
DEPARTMENT OF TRANSPORTATION

SUPERSTRUCTURE DETAILS - 2
STRUCTURE NO. 072-0168

SHEET S13 OF S32 SHEETS

F.A.P. RTE.	SECTION	COUNTY	TOTAL SHEETS	SHEET NO.
317	(14HB-1)BRR	PEORIA	418	151

CONTRACT NO. 68E44

ILLINOIS | FED. AID PROJECT

2/12/2025 8:37:41 PM

SUPERSTRUCTURE BILL OF MATERIAL

Bar	No.	Size	Length	Shape
a(E)	397	#5	32'-5"	
a1(E)	280	#5	32'-2"	
a2(E)	785	#6	8'-4"	
a3(E)	109	#5	49'-6"	
a4(E)	77	#5	49'-3"	
a5(E)	92	#5	46'-1"	
a6(E)	65	#5	45'-10"	
a7(E)	92	#5	42'-9"	
a8(E)	65	#5	42'-6"	
a9(E)	104	#5	39'-5"	
a10(E)	73	#5	39'-2"	
a11(E)	2	#5	50'-2"	
a12(E)	4	#5	32'-11"	
a13(E)	2	#5	35'-9"	
a14(E)	8	#5	1'-6"	
b(E)	546	#5	31'-5"	
b1(E)	75	#7	31'-1"	
b2(E)	660	#5	27'-11"	
b3(E)	71	#7	30'-5"	
b4(E)	67	#7	25'-1"	
d(E)	591	#5	6'-4"	
d1(E)	591	#5	8'-5"	
d2(E)	3	#6	5'-7"	
d3(E)	6	#6	10'-5"	
e1(E)	18	#4	13'-6"	
e2(E)	24	#4	7'-4"	
e3(E)	18	#4	14'-7"	
e4(E)	24	#4	7'-1"	
e5(E)	12	#4	18'-6"	
e6(E)	24	#4	5'-6"	
e7(E)	12	#4	15'-5"	
e8(E)	8	#4	23'-1"	
e9(E)	16	#4	7'-4"	
e10(E)	8	#4	24'-8"	
e11(E)	16	#4	7'-1"	
e12(E)	8	#4	21'-1"	
e13(E)	16	#4	5'-6"	
e14(E)	8	#4	18'-0"	
e15(E)	18	#4	13'-8"	
e16(E)	18	#4	14'-9"	
e17(E)	12	#4	18'-9"	
e18(E)	12	#4	15'-7"	
e19(E)	8	#4	23'-4"	
e20(E)	8	#4	24'-11"	
e21(E)	8	#4	21'-4"	
e22(E)	8	#4	18'-2"	

SUPERSTRUCTURE BILL OF MATERIAL

Bar	No.	Size	Length	Shape
m(E)	20	#6	32'-11"	
m1(E)	4	#4	32'-11"	
m2(E)	20	#6	27'-1"	
m3(E)	4	#4	26'-4"	
m4(E)	20	#6	19'-10"	
m5(E)	4	#4	19'-1"	
s(E)	144	#5	8'-1"	
s1(E)	162	#5	7'-0"	
u(E)	162	#4	4'-2"	
v(E)	151	#5	3'-1"	
Concrete Superstructure			Cu. Yd.	518.7
Protective Coat			Sq. Yd.	1,787
Reinforcement Bars, Epoxy Coated			Pound	131,900

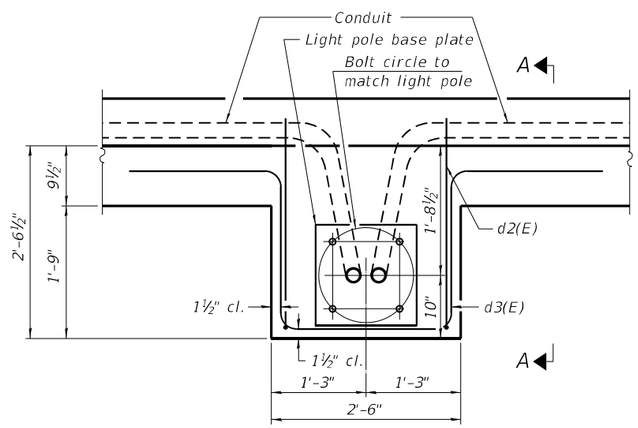

LIGHT POLE PEDESTAL PLAN

1 Location required
See Highway Standard 812001.

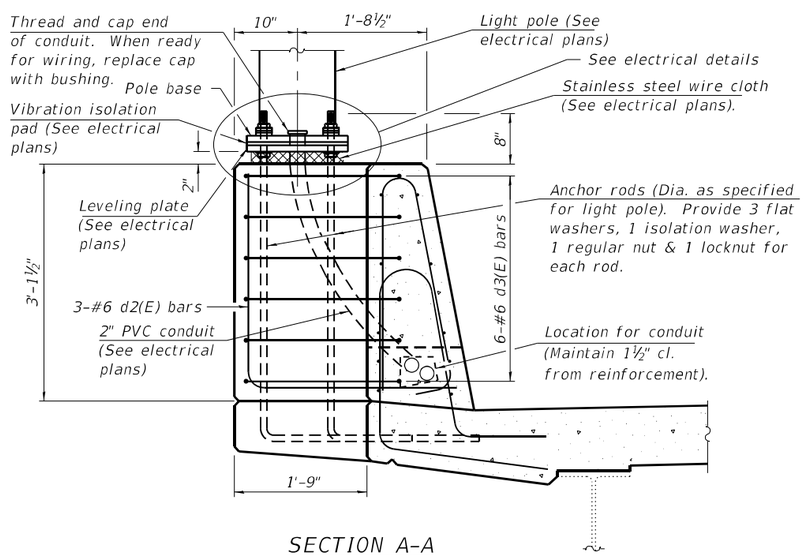

SECTION A-A

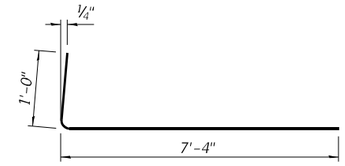

BAR a2(E)

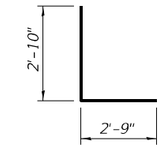

BAR d2(E)

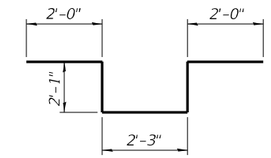

BAR d3(E)

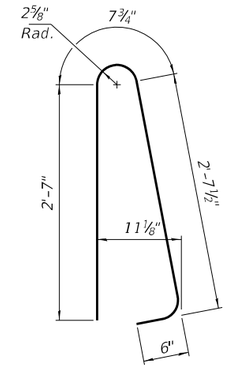

BAR d(E)

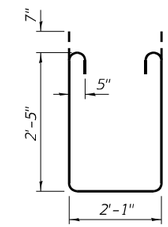

BAR s(E)

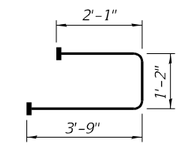

BAR s1(E)

(Headed. 324-#5 Bar terminators)

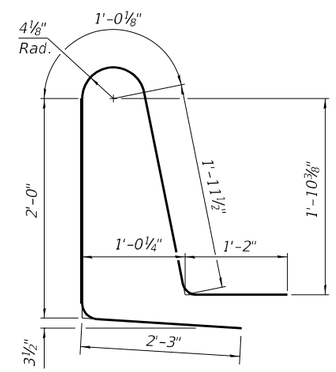

BAR d1(E)

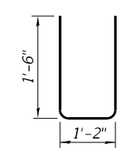

BAR u(E)

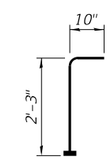

BAR v(E)

(Headed. 151-#5 Bar terminators)

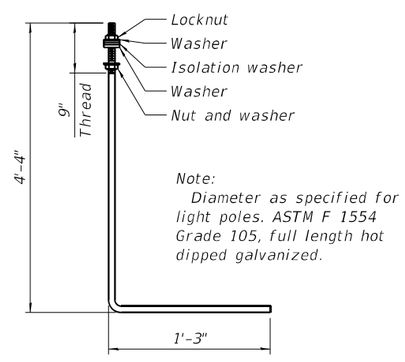

ANCHOR ROD

Note:
Diameter as specified for light poles. ASTM F 1554 Grade 105, full length hot dipped galvanized.

Notes:
Cost of anchor rods is included with Concrete Superstructure.
Apply protective coat to the top surface of the light pole pedestal according to Article 503.19 of the Standard Specifications.
Bar terminators, paid for separately. See Total Bill of Material.

MODEL: Default
FILE NAME: P:\4312-VBMcCLugageRehab\CADD\Structural_SN 072-0168_Adam SL_Final Plans\0720168-68E44-014-Sup_Details3.dgn

MODJESKI and MASTERS

USER NAME =	DESIGNED - YJ	REVISED -
	CHECKED - UB	REVISED -
PLOT SCALE =	DRAWN - AEC	REVISED -
PLOT DATE =	CHECKED - UB	REVISED -

STATE OF ILLINOIS
DEPARTMENT OF TRANSPORTATION

SUPERSTRUCTURE DETAILS - 3
STRUCTURE NO. 072-0168

SHEET S14 OF S32 SHEETS

F.A.P. RTE.	SECTION	COUNTY	TOTAL SHEETS	SHEET NO.
317	(14HB-1)BRR	PEORIA	418	152

CONTRACT NO. 68E44

ILLINOIS FED. AID PROJECT

2/12/2025 8:37:46 PM

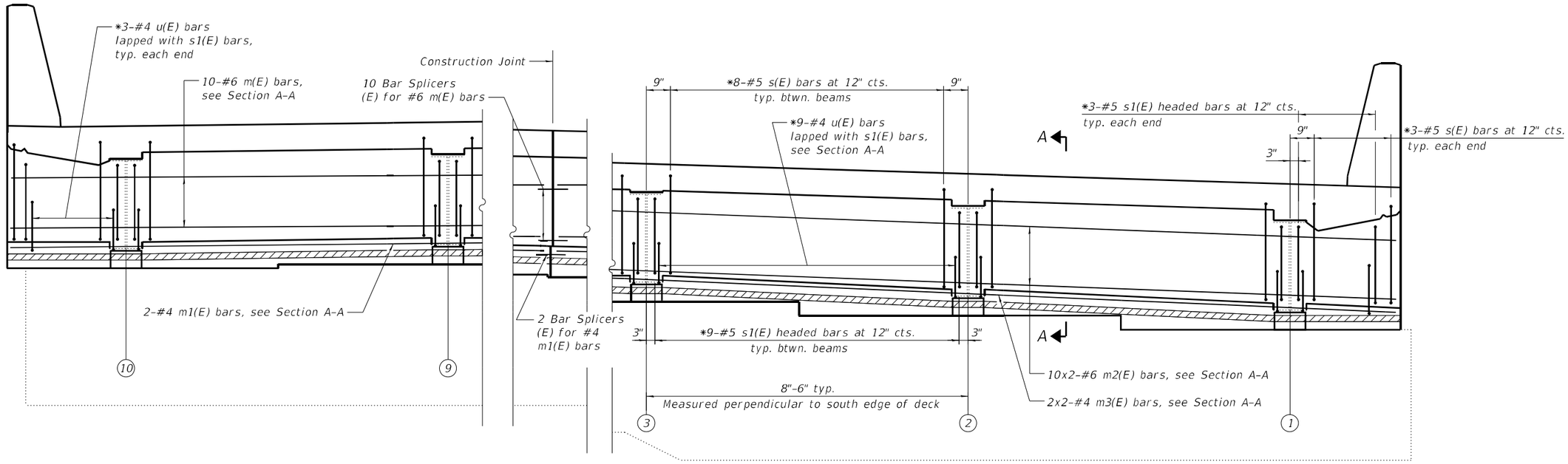

DIAPHRAGM ELEVATION AT WEST ABUTMENT

Looking west

Note:
Existing steel diaphragms between beams not shown for clarity.

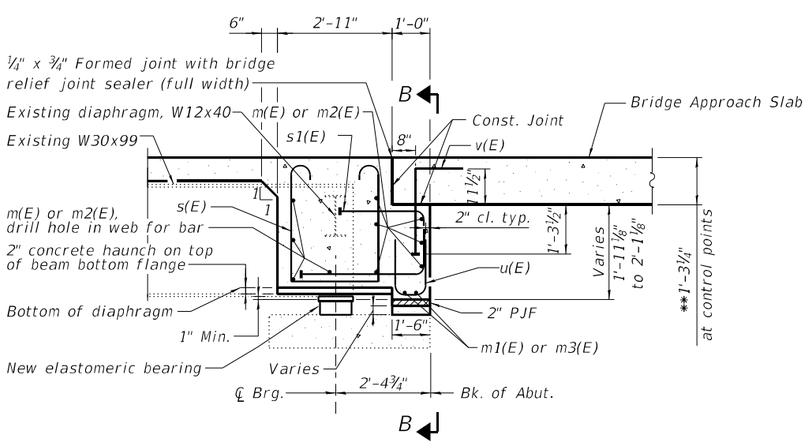

SECTION A-A

(Horiz. dim. at Rt. ∠'s)

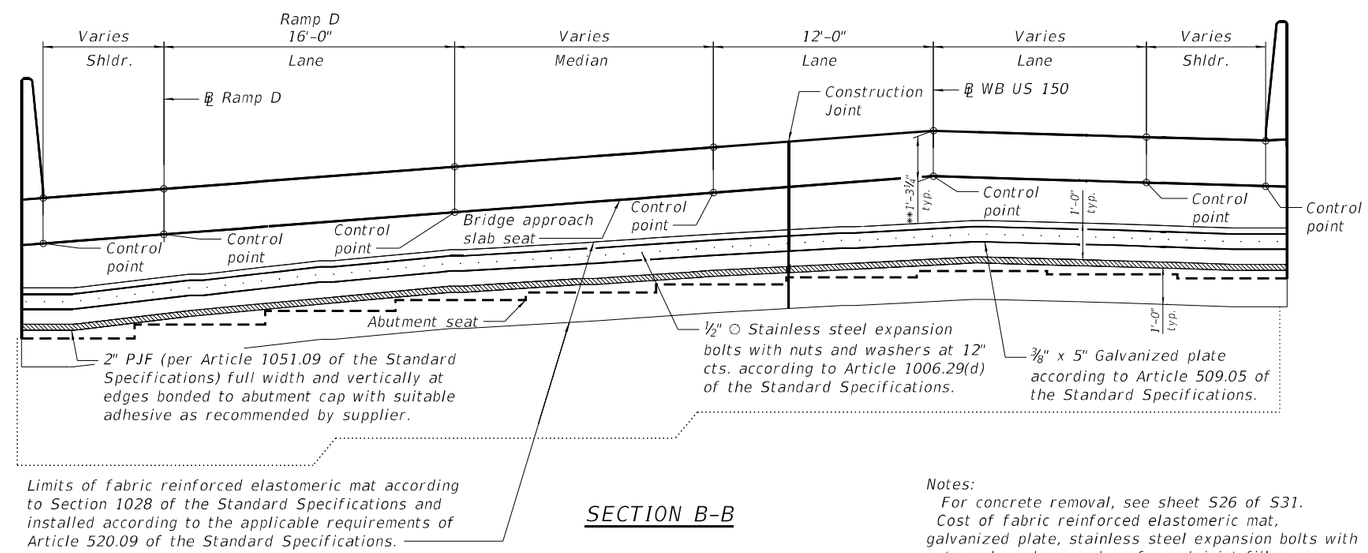

SECTION B-B

Notes:
For concrete removal, see sheet S26 of S31.
Cost of fabric reinforced elastomeric mat, galvanized plate, stainless steel expansion bolts with nuts and washers and preformed joint filler are included with Concrete Superstructure.
Pay items and quantities for diaphragm are included with the Superstructure Bill of Material on sheet S14 of S31.
For details of bars s(E), s1(E), u(E), and v(E) see sheet S14 of S31.
The bridge approach slab seat shall have a constant slope between control points.
For bearing details, see sheet S24 of S31.
For reinforcement in new concrete below the 2" PJF, see West Abutment details on sheet S27 of S31.

MINIMUM BAR LAP

#4 bar = 2'-5"
#6 bar = 4'-0"

* Place bars parallel to centerline of beams.
** Prior to grinding

MODJESKI and MASTERS	USER NAME =	DESIGNED - UB	REVISED -	STATE OF ILLINOIS DEPARTMENT OF TRANSPORTATION	WEST ABUTMENT DIAPHRAGM DETAILS STRUCTURE NO. 072-0168	F.A.P. RTE.	SECTION	COUNTY	TOTAL SHEETS	SHEET NO.
		CHECKED - RLM	REVISED -			317	(14HB-1)BRR	PEORIA	418	153
	PLOT SCALE =	DRAWN - AEC	REVISED -					CONTRACT NO. 68E44		
	PLOT DATE =	CHECKED - YSS	REVISED -		SHEET S15 OF S32 SHEETS		ILLINOIS	FED. AID PROJECT		

MODEL: Default
FILE NAME: P:\4312-WBM\CLigageRehab\CADD\Structural_SN 072-0168_Adam St_Final Plans\0720168-68E44-015-WestAbutDiaphragm.dgn
2/12/2025 8:37:54 PM

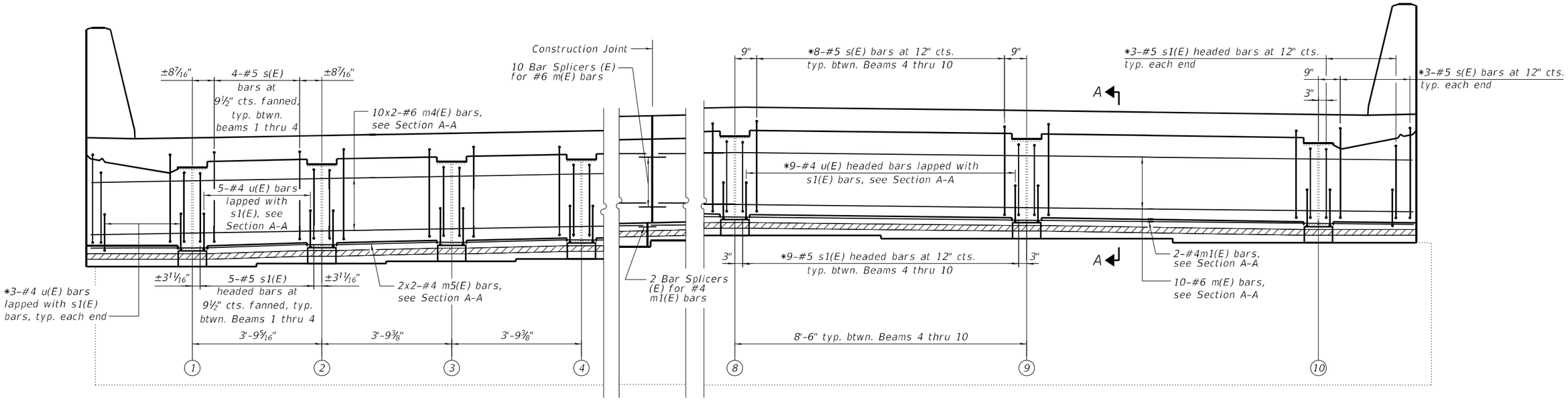

DIAPHRAGM ELEVATION AT EAST ABUTMENT

Looking east

Notes:
Existing steel diaphragms between beams not shown for clarity.
Beam spacing at ℄ of bearing measured perpendicular to south edge of deck.

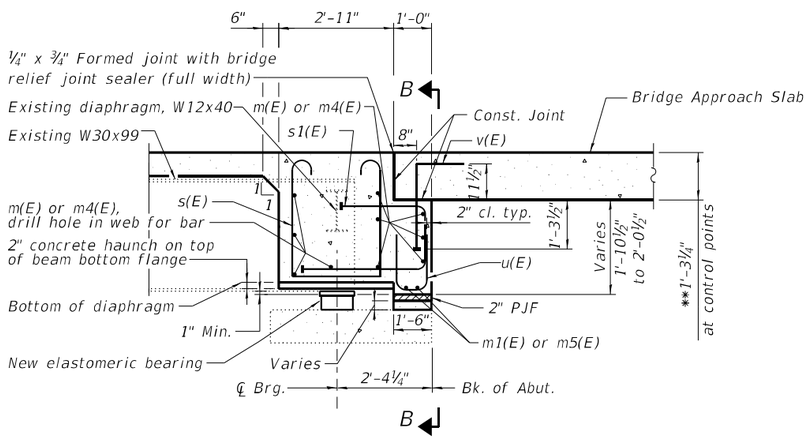

SECTION A-A

(Horiz. dim. at Rt. ∠'s)

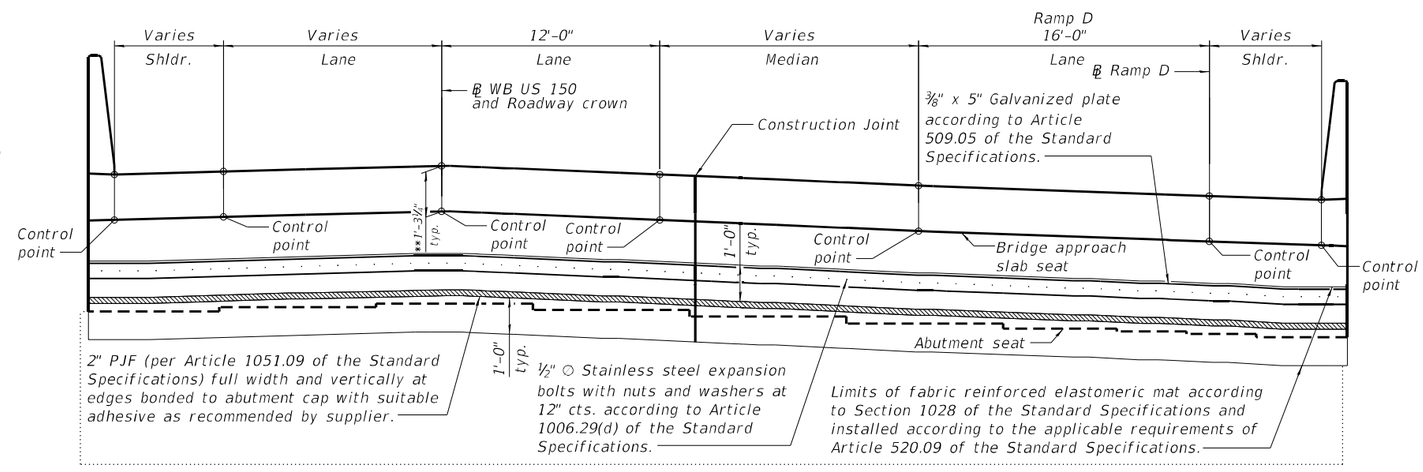

SECTION B-B

Notes:
For concrete removal, see sheet S26 of S31.
Cost of fabric reinforced elastomeric mat, galvanized plate, stainless steel expansion bolts with nuts and washers and preformed joint filler are included with Concrete Superstructure.
Pay items and quantities for diaphragm are included with the Superstructure Bill of Material on sheet S14 of S31.
For details of bars s(E), s1(E), u(E), and v(E) see sheet S14 of S31.
The bridge approach slab seat shall have a constant slope between control points.
For bearing details, see sheet S25 of S31.
For reinforcement in new concrete below the 2" PJF, see East Abutment details on sheet S28 of S31.

MINIMUM BAR LAP

#4 bar = 2'-5"
#6 bar = 4'-0"

* Place bars parallel to centerline of beams.
** Prior to grinding

MODEL: Default
FILE NAME: P:\4312-VBM&CL\gageRehab\CADD\Structural_SN 072-0168_Adam St_Final Plans\0720168-68E44-016-EastAbutDiaphragm.dgn

MODJESKI and MASTERS	USER NAME =	DESIGNED - UB	REVISED -
		CHECKED - RLM	REVISED -
	PLOT SCALE =	DRAWN - AEC	REVISED -
	PLOT DATE =	CHECKED - YSS	REVISED -

STATE OF ILLINOIS
DEPARTMENT OF TRANSPORTATION

EAST ABUTMENT DIAPHRAGM DETAILS
STRUCTURE NO. 072-0168

SHEET S16 OF S32 SHEETS

F.A.P. RTE.	SECTION	COUNTY	TOTAL SHEETS	SHEET NO.
317	(14HB-1)BRR	PEORIA	418	154
		CONTRACT NO. 68E44		
	ILLINOIS	FED. AID PROJECT		

2/12/2025 8:37:57 PM

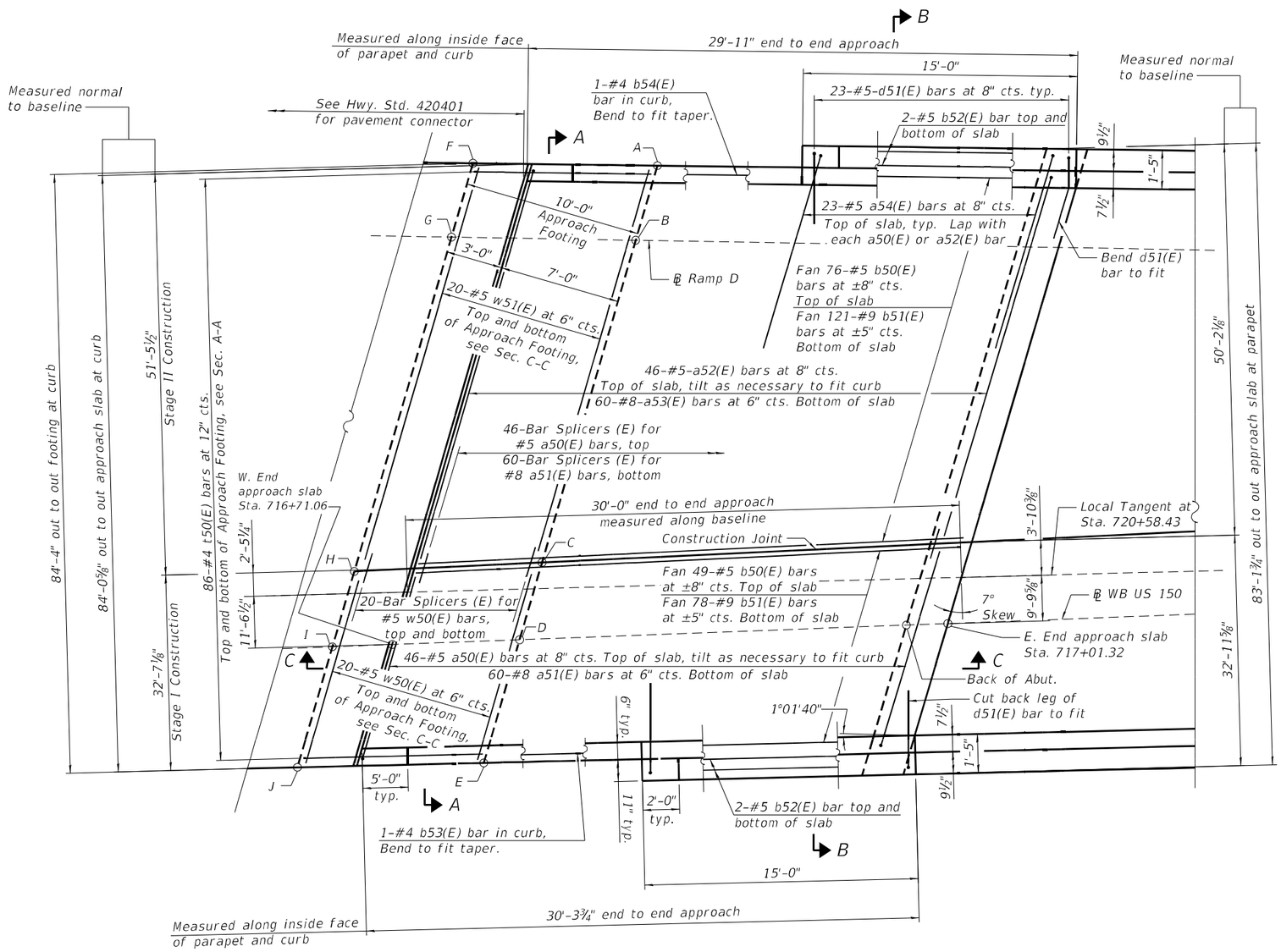

PLAN - WEST BRIDGE APPROACH SLAB

Note:
Trim a50(E) thru a53(E), b50(E), b51(E) and w51(E) bars in field to fit.

TOP AND BOTTOM ELEVATIONS FOR APPROACH FOOTING

West Approach					
Point	Profile Grade	Station	Offset	Top	Bottom
A	Ramp D	14+67.72	8.54	508.10	507.27
B	Ramp D	14+68.55	0.00	508.48	507.65
C	W.B. F.A.P. 317	716+80.69	-13.77	509.84	509.00
D	W.B. F.A.P. 317	716+78.18	0.00	510.11	509.28
E	W.B. F.A.P. 317	716+74.81	18.41	509.89	509.05
F	Ramp D	14+77.77	8.54	508.26	507.42
G	Ramp D	14+78.60	0.00	508.66	507.82
H	W.B. F.A.P. 317	716+70.57	-13.88	510.09	509.25
I	W.B. F.A.P. 317	716+68.01	0.00	510.37	509.53
J	W.B. F.A.P. 317	716+64.60	18.47	510.14	509.31

Notes:
See sheet S18 of S32 for Sections A-A and B-B.
See sheet S19 of S32 for approach slab details and Bill of Materials.
See sheet S19 of S32 for parapet elevation and Section C-C.

MODEL: Default
FILE NAME: P:\4312-VBM\CLugageRehab\CADD\Structural_SN 072-0168_Adam SL_Final Plans\072016368-68E44-017-Sup_ApprSlabDtls\Wabut1.dgn
3/12/2025 3:37:01 PM

MODJESKI and MASTERS

USER NAME =	DESIGNED - YJ	REVISED -	
	CHECKED - UB	REVISED -	
PLOT SCALE =	DRAWN - AEC	REVISED -	
PLOT DATE =	CHECKED - UB	REVISED -	

STATE OF ILLINOIS
DEPARTMENT OF TRANSPORTATION

BRIDGE APPROACH SLAB DETAILS AT WEST ABUTMENT - 1
STRUCTURE NO. 072-0168

SHEET S17 OF S32 SHEETS

F.A.P. RTE.	SECTION	COUNTY	TOTAL SHEETS	SHEET NO.
317	(14HB-1)BRR	PEORIA	418	155

CONTRACT NO. 68E44

ILLINOIS FED. AID PROJECT

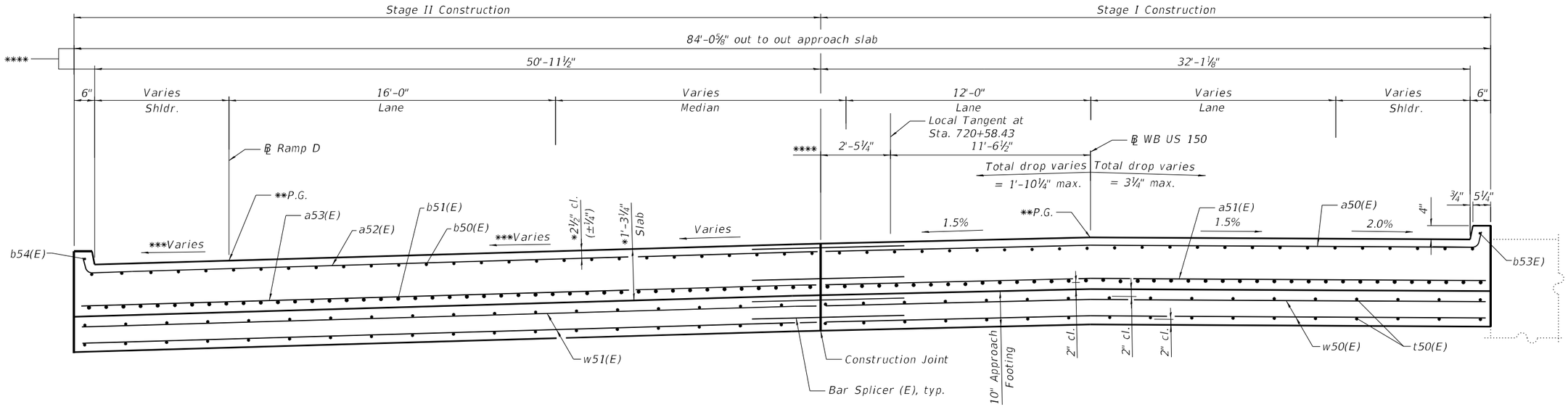

SECTION A-A

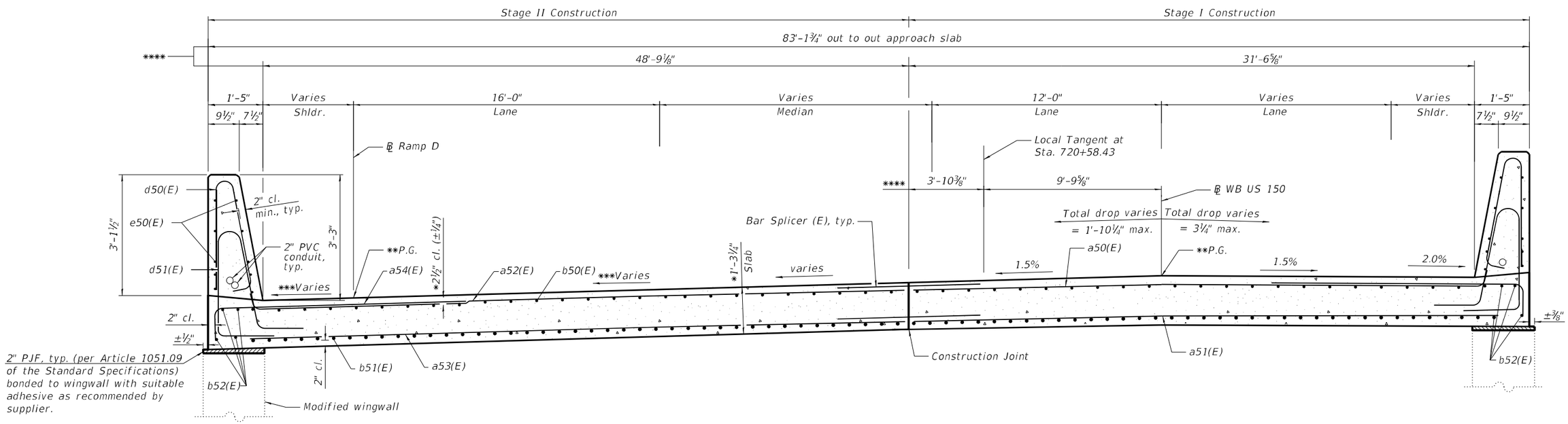

SECTION B-B

* Prior to grinding
** After grinding
*** Superelevation transition begins at Sta. 13+90.00 to match the existing 5.18% slope at Sta. 15+00.00
**** Dimensions measured perpendicular to Baseline at west end of approach slab in Section A-A and at east end of approach slab in Section B-B.

MODEL: Default
FILE NAME: P:\4312-VBK\C1LuggeRehab\CADD\Structural_SN 072-0168_Adam SL_Final Plans\0720168-68E44-018-Sup_ApprSlabDtls\Abut2.dgn

MODJESKI and MASTERS

USER NAME =	DESIGNED - YJ	REVISED -	
	CHECKED - UB	REVISED -	
PLOT SCALE =	DRAWN - AEC	REVISED -	
PLOT DATE =	CHECKED - UB	REVISED -	

STATE OF ILLINOIS
DEPARTMENT OF TRANSPORTATION

BRIDGE APPROACH SLAB DETAILS AT WEST ABUTMENT - 2
STRUCTURE NO. 072-0168

SHEET S18 OF S32 SHEETS

F.A.P. RTE.	SECTION	COUNTY	TOTAL SHEETS	SHEET NO.
317	(14HB-1)BRR	PEORIA	418	156
		CONTRACT NO. 68E44		
	ILLINOIS	FED. AID PROJECT		

2/12/2025 8:38:06 PM

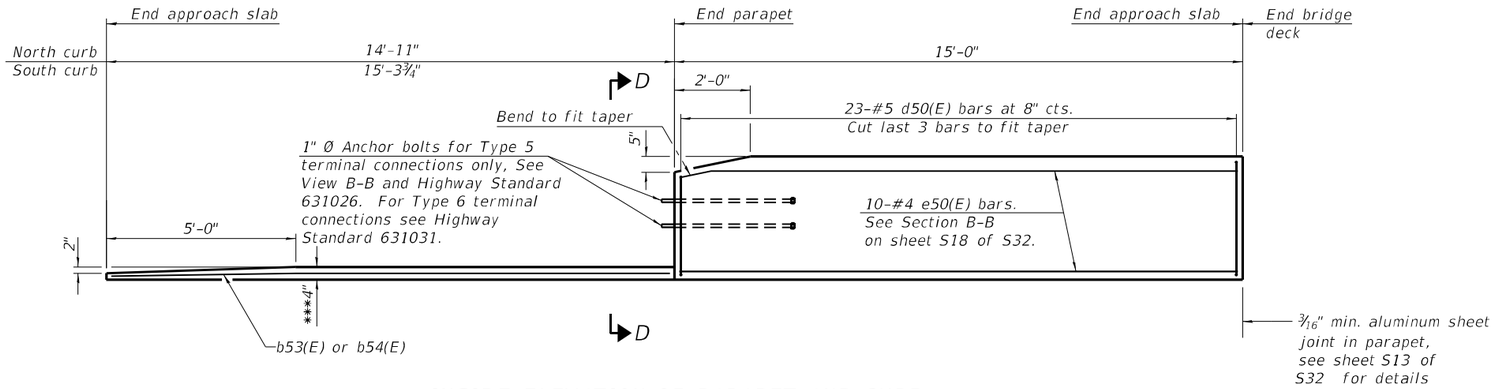

INSIDE ELEVATION OF PARAPET AND CURB

North parapet/curb shown, south parapet/curb opposite hand.

Notes:

The joint opening shall be adjusted for temperature per Article 520.04 of the Standard Specifications. However, since this detail is for jointless structures, the length of bridge used to calculate the adjustment shall be equal to half the total bridge length plus the length of the bridge approach slab.

Removal of both existing bridge approach slabs and parapet at the west approach shall be included with Removal of Existing Concrete Deck No. 1.

Removal of both existing approach footings at the west approach shall be paid for as Concrete Removal.

Parapet concrete shall be paid for as Concrete Superstructure.

Approach slab shall be paid for as Concrete Superstructure (Approach Slab).

Approach footing concrete shall be paid for as Concrete Structures.

The approach footing maximum applied service bearing pressure (Qmax) = 2.0 ksf.

Cost of excavation for approach footing included with Concrete Structures.

For Granular Backfill for Structures and drainage treatment details, see sheet S15 of S32.

Cost of preformed joint filler and adhesive included with Concrete Superstructure (Approach Slab).

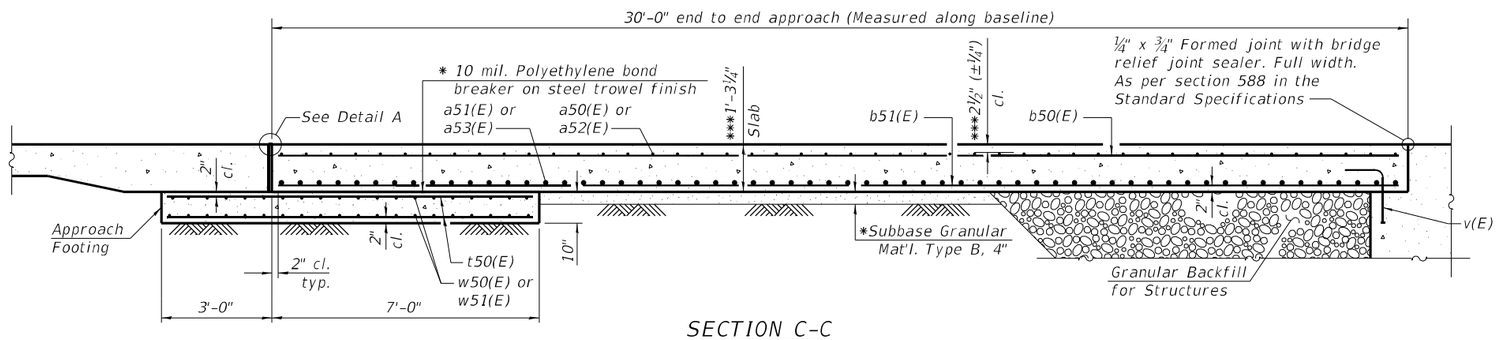

SECTION C-C

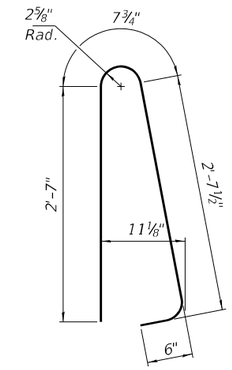

BAR d50(E)

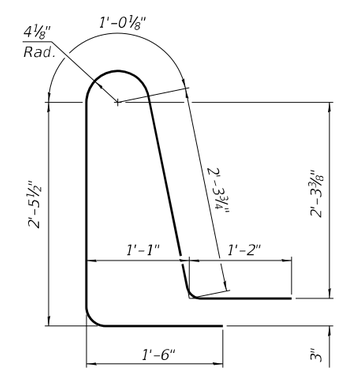

BAR d51(E)

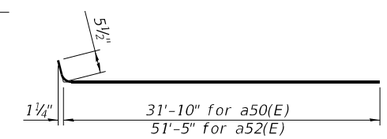

BAR a50(E) AND a52(E)

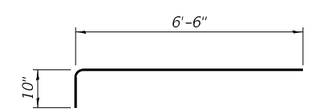

BAR a54(E)

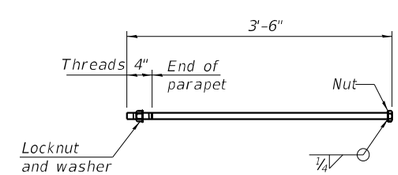

*1" Ø ANCHOR BOLT

(Anchor bolt assemblies shall be galvanized according to Article 1006.09 of the Standard Specifications)

WEST APPROACH SLAB BILL OF MATERIAL

Bar	No.	Size	Length	Shape
a50(E)	46	#5	32'-4"	
a51(E)	60	#8	32'-0"	
a52(E)	46	#5	51'-11"	
a53(E)	60	#8	51'-6"	
a54(E)	46	#5	7'-4"	
b50(E)	125	#5	30'-0"	
b51(E)	199	#9	30'-0"	
b52(E)	8	#5	14'-8"	
b53(E)	1	#4	15'-0"	
b54(E)	1	#4	14'-7"	
d50(E)	46	#5	6'-4"	
d51(E)	46	#5	8'-5"	
e50(E)	20	#4	14'-8"	
t50(E)	172	#4	9'-8"	
w50(E)	40	#5	32'-5"	
w51(E)	40	#5	51'-0"	
Concrete Removal			Cu. Yd.	26.0
Concrete Superstructure			Cu. Yd.	4.1
Concrete Superstructure (Approach slab)			Cu. Yd.	118.1
Concrete Structures			Cu. Yd.	26.1
Protective Coat			Sq. Yd.	289
Reinforcement Bars, Epoxy Coated			Pound	47,620

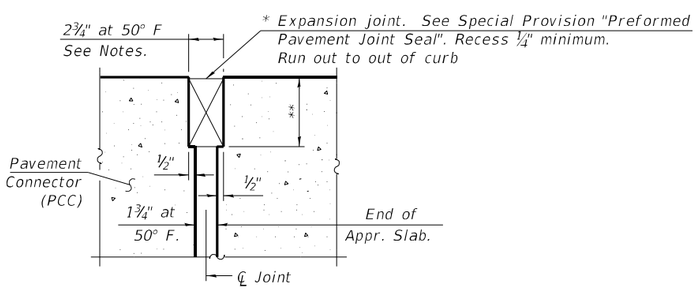

DETAIL A

(at Rt. ∠'s)

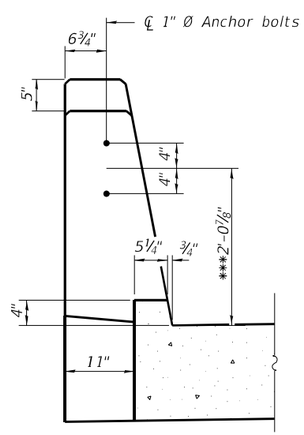

VIEW D-D

* Cost included with Concrete Superstructure (Approach Slab).

** Per manufacturer recommendations

*** Prior to grinding

MODEL: Default
FILE NAME: P:\4312-WBMcCLugageRehab\CADD\Structural_SN 072-0168_Adam St_Final Plans\0720168-68E44-019-Sup_ApprSlabDtls\Abut3.dgn

3/3/2025 6:50:42 AM

MODJESKI and MASTERS

USER NAME =	DESIGNED - YJ	REVISED -	
	CHECKED - UB	REVISED -	
PLOT SCALE =	DRAWN - AEC	REVISED -	
PLOT DATE =	CHECKED - UB	REVISED -	

STATE OF ILLINOIS
DEPARTMENT OF TRANSPORTATION

BRIDGE APPROACH SLAB DETAILS AT WEST ABUTMENT - 3
STRUCTURE NO. 072-0168

SHEET S19 OF S32 SHEETS

F.A.P. RTE.	SECTION	COUNTY	TOTAL SHEETS	SHEET NO.
317	(14HB-1)BRR	PEORIA	418	157
		CONTRACT NO. 68E44		
	ILLINOIS	FED. AID PROJECT		

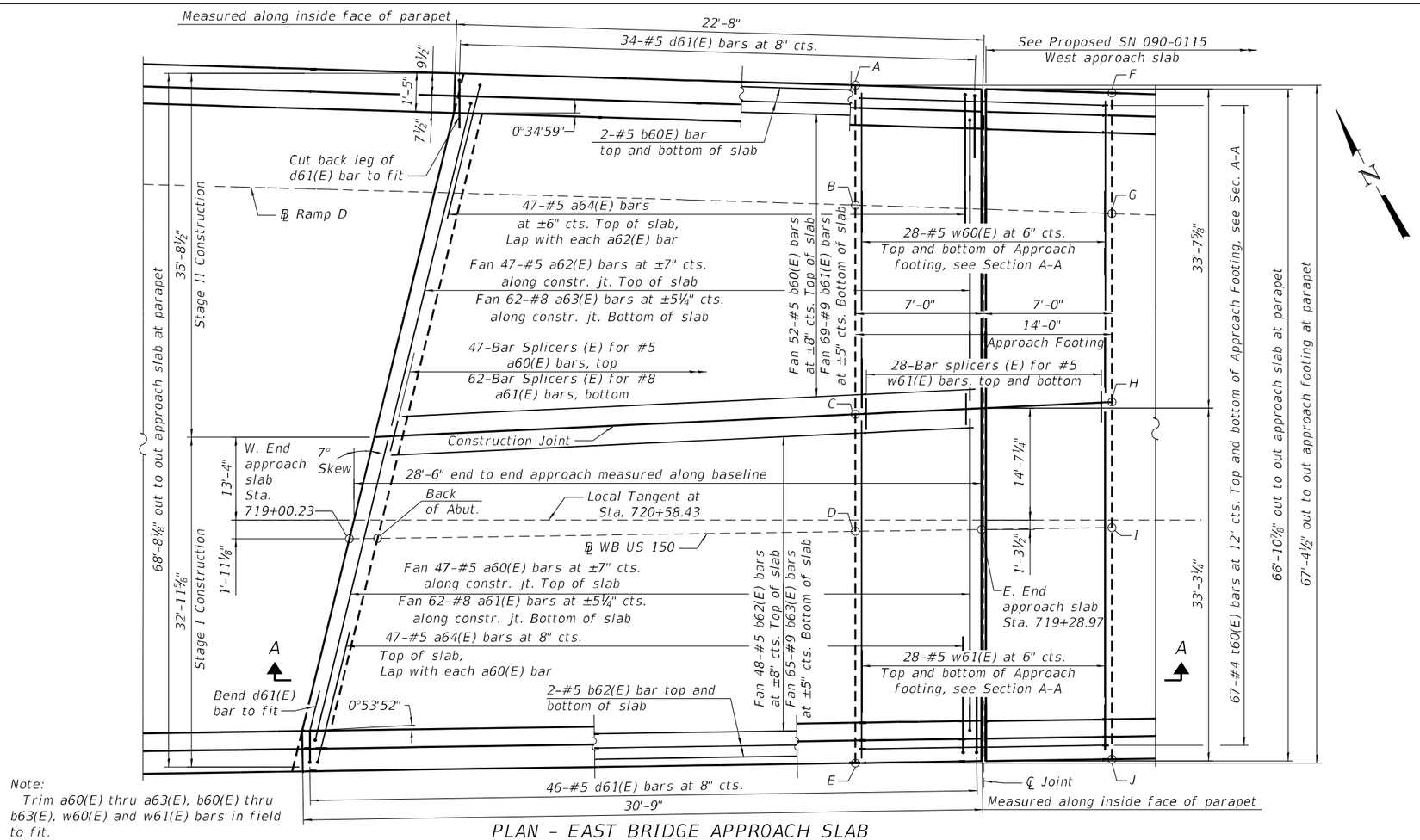

PLAN - EAST BRIDGE APPROACH SLAB

TOP AND BOTTOM ELEVATIONS FOR APPROACH FOOTING

East Approach					
Point	Profile Grade	Station	Offset	Top	Bottom
A	Ramp D	12+32.19	10.92	503.27	502.44
B	Ramp D	12+31.68	0.00	503.48	502.64
C	W.B. F.A.P. 317	719+22.37	-15.70	503.82	502.98
D	W.B. F.A.P. 317	719+22.04	0.00	504.02	503.19
E	W.B. F.A.P. 317	719+21.68	17.45	503.74	502.91
F	Ramp D	12+18.20	10.85	502.94	502.11
G	Ramp D	12+17.66	0.00	503.14	502.31
H	W.B. F.A.P. 317	719+36.35	-16.09	503.47	502.64
I	W.B. F.A.P. 317	719+36.05	0.00	503.67	502.84
J	W.B. F.A.P. 317	719+35.72	17.32	503.39	502.56

* Prior to grinding
** After grinding
*** ±1⅝" max at north wingwall, ±½" max at south wingwall

Note:
For Section A-A, approach slab details, and Bill of Material, see sheet S21 of S32.

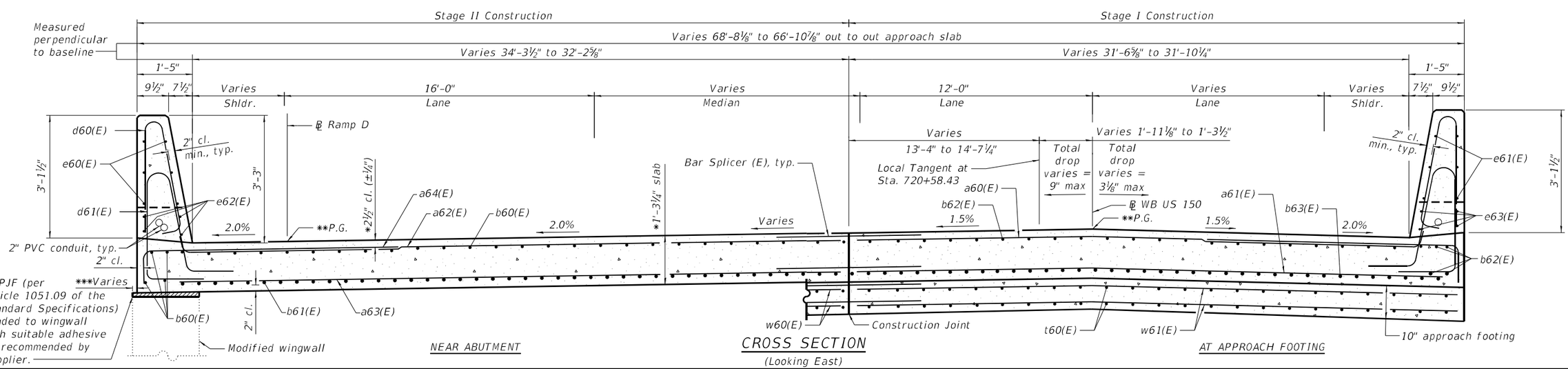

NEAR ABUTMENT

CROSS SECTION

(Looking East)

AT APPROACH FOOTING

USER NAME =	DESIGNED - YJ	REVISED -	
	CHECKED - UB	REVISED -	
PLOT SCALE =	DRAWN - AEC	REVISED -	
PLOT DATE =	CHECKED - UB	REVISED -	

MODJESKI and MASTERS

STATE OF ILLINOIS
DEPARTMENT OF TRANSPORTATION

BRIDGE APPROACH SLAB DETAILS AT EAST ABUTMENT - 1
STRUCTURE NO. 072-0168

SHEET S20 OF S32 SHEETS

F.A.P. RTE.	SECTION	COUNTY	TOTAL SHEETS	SHEET NO.
317	(14HB-1)BRR	PEORIA	418	158

CONTRACT NO. 68E44

ILLINOIS | FED. AID PROJECT

MODEL: Default
FILE NAME: P:\4312-WBI\CLigageRehab\CADD\Structural_SN 072-0168_Adam St_Final Plans\0720168-68E44-020-Sup_ApprSlabDtlsEAbut1.dgn
3/12/2025 3:37:06 PM

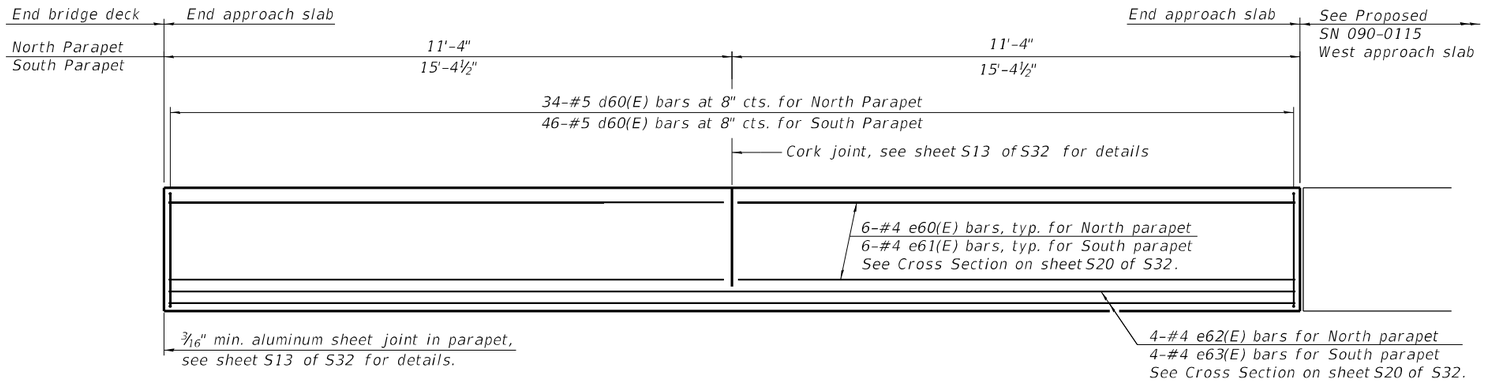

INSIDE ELEVATION OF PARAPET

North parapet shown, south parapet opposite hand.

Notes:

The joint opening shall be adjusted for temperature per Article 520.04 of the Standard Specifications. However, since this detail is for jointless structures, the length of bridge used to calculate the adjustment shall be equal to half the total bridge length plus the bridge approach slab lengths of SN 072-0168 and SN 090-0115.

Removal of the existing bridge approach slab and parapet shall be included with Removal of Existing Concrete Deck No. 1.

Removal of the existing approach footing shall be paid for as Concrete Removal. The quantity of concrete removal for the portion of the existing approach footing supporting SN 090-0115 is included in SN 072-0168.

Parapet concrete shall be paid for as Concrete Superstructure.

Approach slab shall be paid for as Concrete Superstructure (Approach Slab).

Approach footing concrete shall be paid for as Concrete Structures.

The approach footing maximum applied service bearing pressure (Qmax) = 2.0 ksf.

Cost of excavation for approach footing included with Concrete Structures.

For Granular Backfill for Structures and drainage treatment details, see sheet S16 of S32.

Cost of preformed joint filler and adhesive included with Concrete Superstructure (Approach Slab).

EAST APPROACH SLAB BILL OF MATERIAL

Bar	No.	Size	Length	Shape
a60(E)	47	#5	32'-5"	
a61(E)	62	#8	32'-1"	
a62(E)	47	#5	35'-1"	
a63(E)	62	#8	34'-9"	
a64(E)	94	#5	7'-4"	
b60(E)	56	#5	26'-5"	
b61(E)	69	#9	26'-5"	
b62(E)	52	#5	30'-4"	
b63(E)	65	#9	30'-4"	
d60(E)	80	#5	6'-4"	
d61(E)	80	#5	8'-6"	
e60(E)	12	#4	11'-0"	
e61(E)	12	#4	15'-0"	
e62(E)	4	#4	22'-3"	
e63(E)	4	#4	30'-4"	
t60(E)	134	#4	13'-8"	
w60(E)	56	#5	33'-11"	
w61(E)	56	#5	33'-1"	
Concrete Removal			Cu. Yd.	14.9
Concrete Superstructure			Cu. Yd.	7.0
Concrete Superstructure (Approach Slab)			Cu. Yd.	84.9
Concrete Structures			Cu. Yd.	28.9
Protective Coat			Sq. Yd.	217
Reinforcement Bars, Epoxy Coated			Pound	37,910

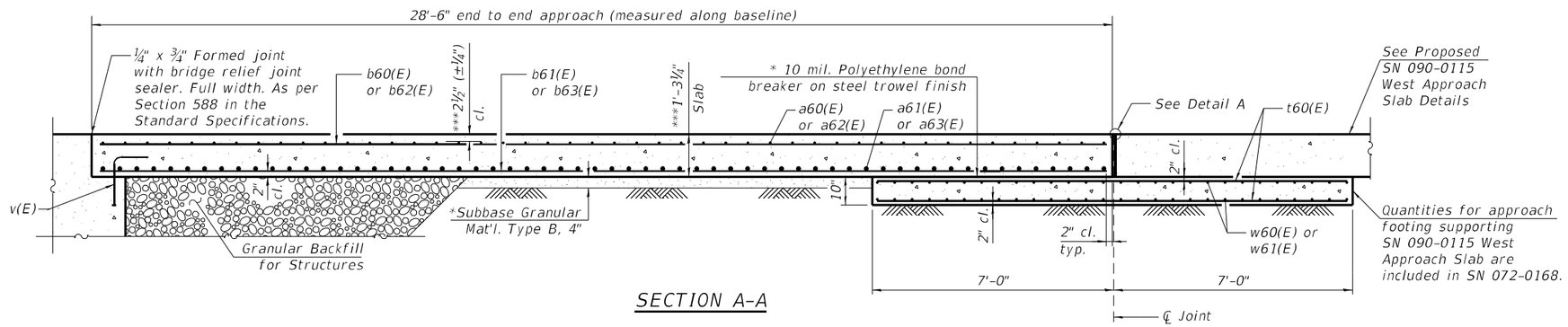

SECTION A-A

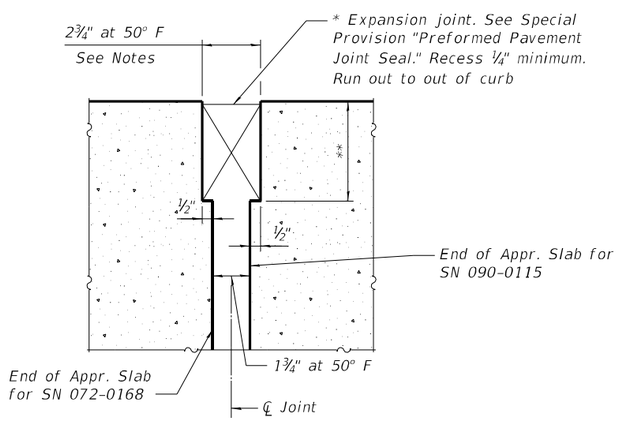

DETAIL A

(at Rt. L's)

* Cost included with Concrete Superstructure (Approach Slab)

** Per Manufacturer recommendations

*** Prior to grinding

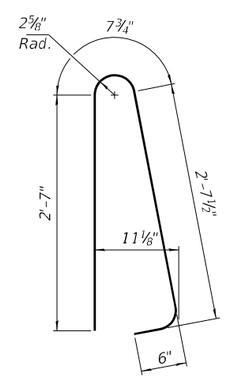

BAR d60(E)

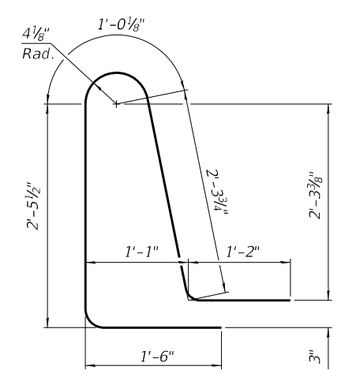

BAR d61(E)

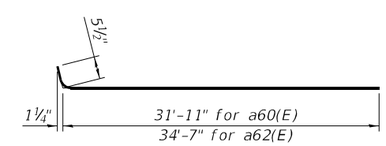

BAR a60(E) and a62(E)

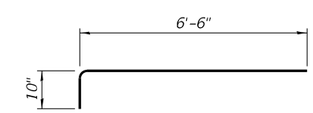

BAR a64(E)

MODEL: Default
FILE NAME: P:\4312-WBMxCLegacyRehab\CADD\Structural_SN 072-0168_Adam SL_Final Plans\0720168-68E44-021-Sup_ApprSlabDtlsEAbut2.dgn
3/3/2025 6:54:39 AM

MODJESKI and MASTERS

USER NAME =	DESIGNED - YJ	REVISED -	
	CHECKED - UB	REVISED -	
PLOT SCALE =	DRAWN - AEC	REVISED -	
PLOT DATE =	CHECKED - UB	REVISED -	

STATE OF ILLINOIS
DEPARTMENT OF TRANSPORTATION

BRIDGE APPROACH SLAB DETAILS AT EAST ABUTMENT - 2
STRUCTURE NO. 072-0168

SHEET S21 OF S32 SHEETS

F.A.P. RTE.	SECTION	COUNTY	TOTAL SHEETS	SHEET NO.
317	(14HB-1)BRR	PEORIA	418	159
		CONTRACT NO. 68E44		
	ILLINOIS	FED. AID PROJECT		

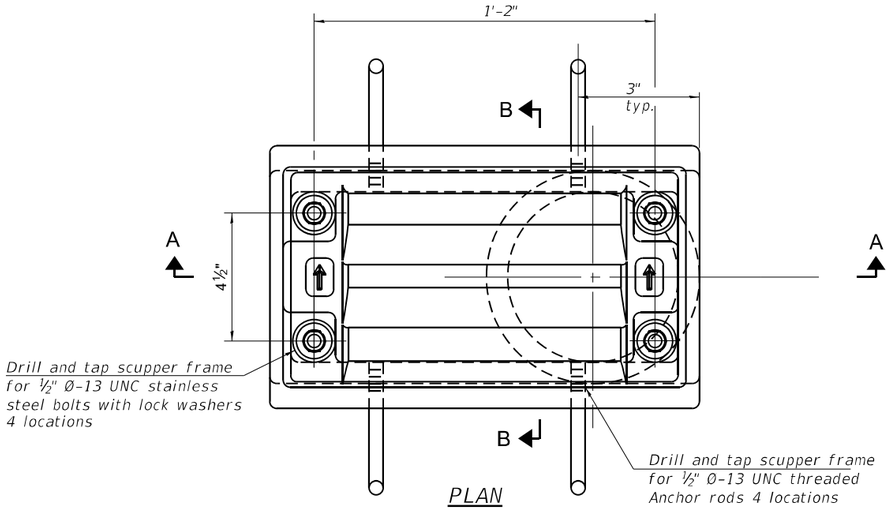

PLAN

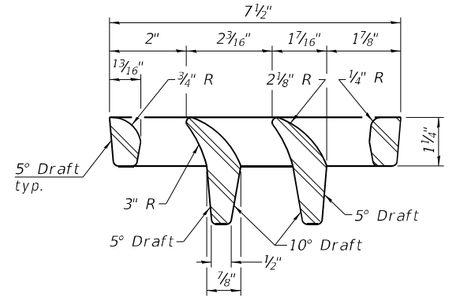

VANE GRATE DETAIL

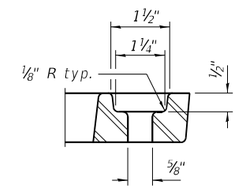

GRATE BOLT HOLE DETAIL

Notes:

All cast iron parts shall be gray iron conforming to the requirements of AASHTO M105, Class 35B and AASHTO M306.

Bolts, anchor rods, nuts and washers shall be according to ASTM A307 and shall be galvanized according to AASHTO M232. As an alternate stainless steel may be used.

Stainless steel hardware shall be according to Article 1006.29(d) of the Standard Specifications.

Structural steel weldments of equal sections and of the same configuration may be substituted for the cast iron scupper frames and downspouts; however, the scupper grates shall remain cast iron. Fillet or full penetration welds shall be used for the weldments. Details shall be submitted to the Engineer for approval.

Structural steel scupper frames and downspouts, when utilized, shall be galvanized according to AASHTO M111.

As an alternate, fiberglass may be used for downspouts according to ASTM D2996 with a short-time rupture strength hoop tensile stress of 30,000 psi min. in lieu of the cast iron or structural steel.

Exterior surfaces of downspouts and exterior exposed surfaces of the scupper frame below deck shall be treated as specified on sheet S2 of S32.

The Contractor shall take appropriate measures to assure that Protective Coat is not applied to the scupper.

Cost of the grate, frame, downspout, anchor rods, nuts and washers including complete installation of the scupper shall be paid for at the contract unit price for Drainage Scuppers, DS-11.

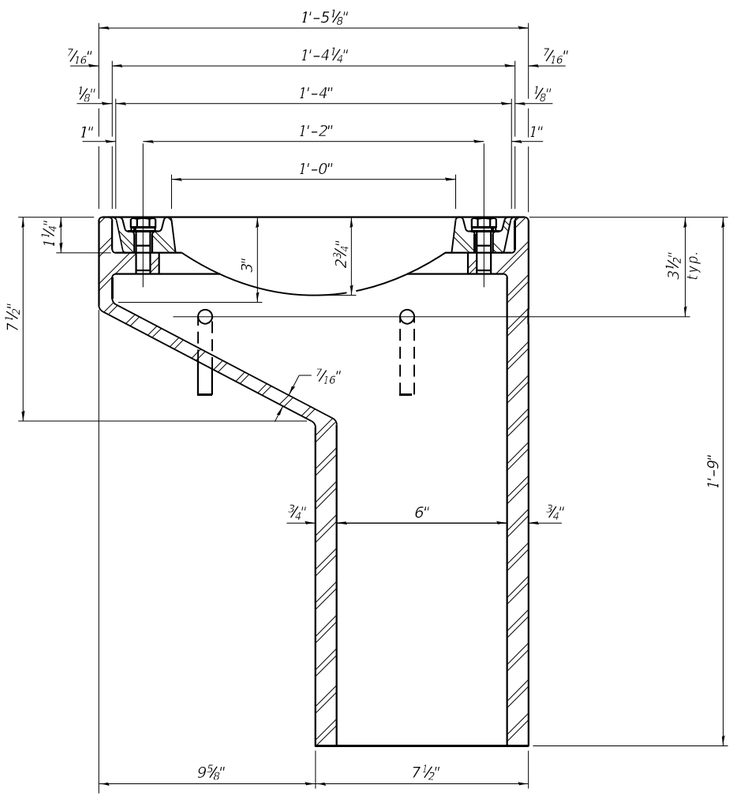

SECTION A-A

See sheet S13 of S32 for scupper location relative to parapet.

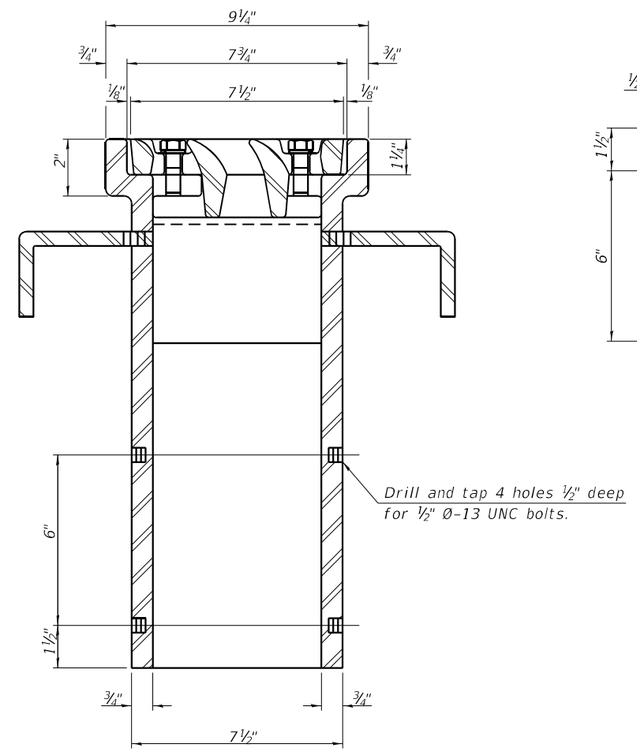

SECTION B-B

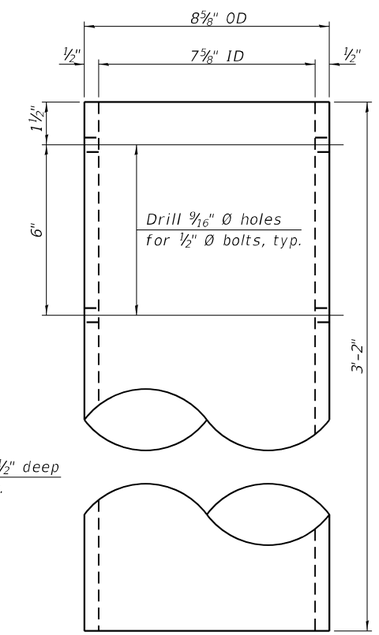

DOWNSPOUT

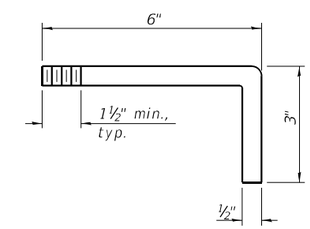

ANCHOR ROD DETAIL

BILL OF MATERIAL

ITEM	UNIT	QUANTITY
Drainage Scuppers, DS-11	Each	1

DS-11 5-15-2023

MODEL: Default
FILE NAME: P:\4312-WBM-CL\BugageRehab\CADD\Structural_SN 072-0168_Adam SL_Final Plans\0720168-68E44-022-DrainageScupper.dgn

2/12/2025 8:38:23 PM

MODJESKI and MASTERS

USER NAME =	DESIGNED - UB	REVISED -	
	CHECKED - YSS	REVISED -	
PLOT SCALE =	DRAWN - AEC	REVISED -	
PLOT DATE =	CHECKED - UB	REVISED -	

STATE OF ILLINOIS
DEPARTMENT OF TRANSPORTATION

DRAINAGE SCUPPERS, DS-11
STRUCTURE NO. 072-0168

SHEET S22 OF S32 SHEETS

F.A.P. RTE.	SECTION	COUNTY	TOTAL SHEETS	SHEET NO.
317	(14HB-1)BRR	PEORIA	418	160

CONTRACT NO. 68E44

ILLINOIS FED. AID PROJECT

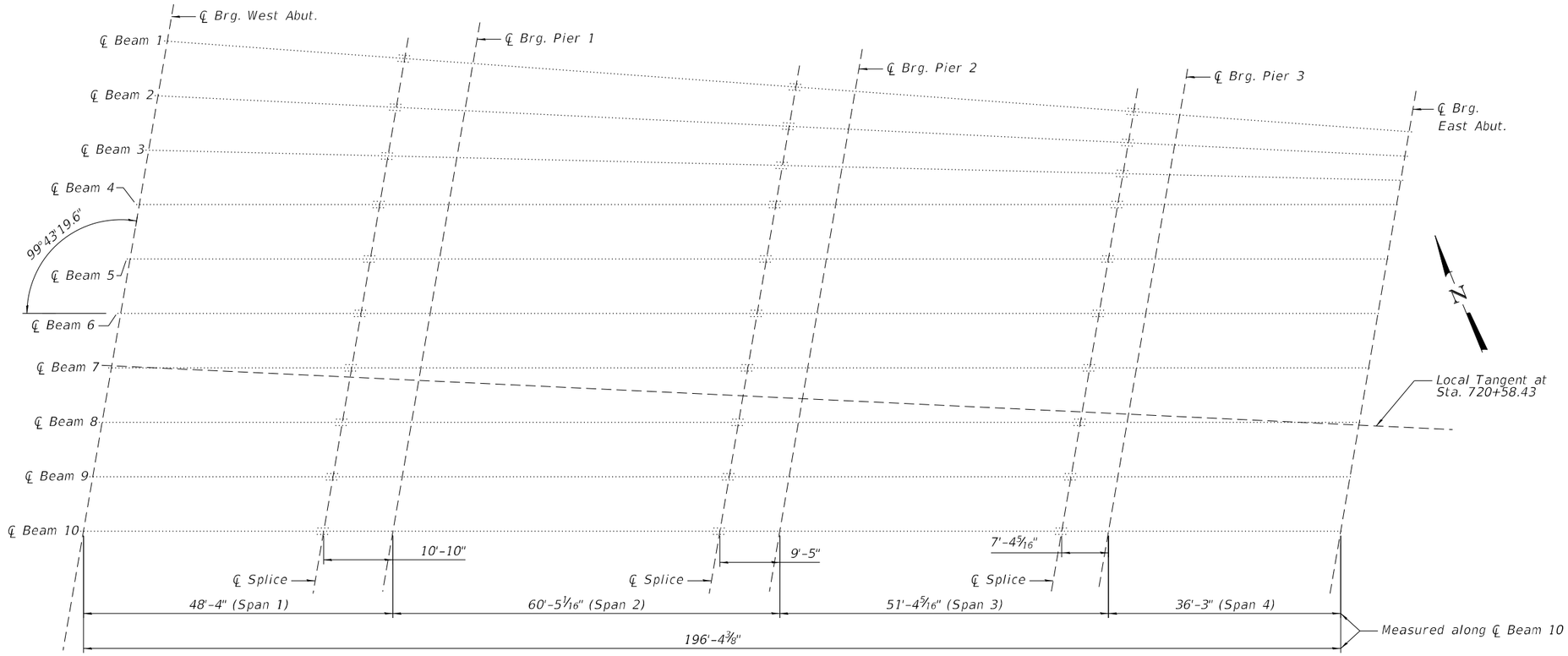

FRAMING PLAN

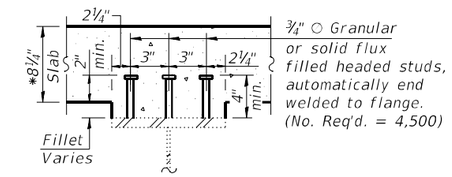

BEAM

* Prior to grinding

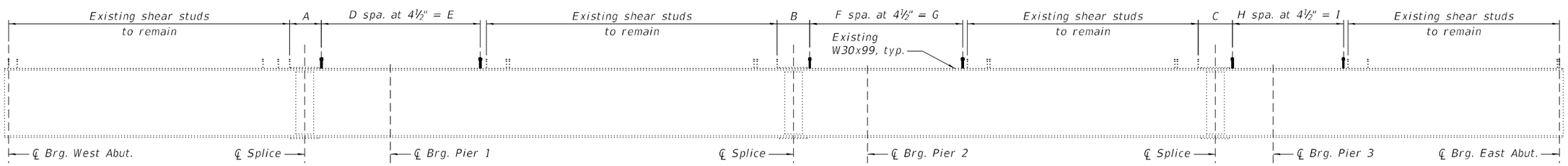

BEAMS 1 THRU 10

Shear stud quantities and dimensions along beam ℄

	A	B	C	D	E	F	G	H	I
Beam 1	4'-0 5/8"	4'-1 1/4"	4'-2 3/8"	54	20'-3"	52	19'-6"	38	14'-3"
Beam 2	3'-11 5/16"	4'-2 1/16"	4'-3 1/16"	55	20'- 7 1/2"	52	19'-6"	38	14'-3"
Beam 3	4'-0 1/2"	4'-3 1/8"	4'-3 15/16"	55	20'-7 1/2'	52	19'-6"	38	14'-3"
Beams 4-10	3'-11 11/16"	4'-2 1/8"	4'-2 11/16"	56	21'-0"	53	19'-10 1/2"	39	14'-7 1/2"

MODEL: Default
FILE NAME: P:\4312-VBM\CLugageRehab\CADD\Structural_SN 072-0168_Adam St_Final Plans\0720168-68E44-023-ShearStudDetails.dgn

MODJESKI and MASTERS

USER NAME =	DESIGNED - JDB	REVISED -
	CHECKED - YSS	REVISED -
PLOT SCALE =	DRAWN - ATH	REVISED -
PLOT DATE =	CHECKED - YSS	REVISED -

STATE OF ILLINOIS
DEPARTMENT OF TRANSPORTATION

SHEAR STUD DETAILS
STRUCTURE NO. 072-0168

SHEET S23 OF S32 SHEETS

F.A.P. RTE.	SECTION	COUNTY	TOTAL SHEETS	SHEET NO.
317	(14HB-1)BRR	PEORIA	418	161

CONTRACT NO. 68E44

ILLINOIS | FED. AID PROJECT

3/3/2025 6:58:35 AM

	INTERIOR GIRDER MOMENT TABLE (GIRDER 8)							
		0.4 Sp. 1	Pier 1	0.5 Sp. 2	Pier 2	0.5 Sp. 3	Pier 3	0.6 Sp. 4
	Is (in⁴)	3,990	3,990	3,990	3,990	3,990	3,990	3,990
	Ic(n) (in⁴)	14,258	–	14,258	–	14,258	–	14,258
	Ic(3n) (in⁴)	11,146	–	11,146	–	11,146	–	11,146
	Ic(cr) (in⁴)	–	7,121	–	7,121	–	7,121	–
	Ss (in³)	269	269	269	269	269	269	269
	Sc(n) (in³)	461	–	461	–	461	–	461
	Sc(3n) (in³)	422	–	422	–	422	–	422
	Sc(cr) (in³)	–	356	–	356	–	356	–
	Z (in³)	–	–	–	–	–	–	–
	wD (k/')	1.03	1.03	1.03	1.03	1.03	1.03	1.03
	MD (' k)	163	-318	172	-283	106	-187	88
	sD (k/')	0.179	0.179	0.179	0.179	0.179	0.179	0.179
	MsD (' k)	28	-55	30	-49	18	-32	15
	ML (' k)	371	-303	379	-295	309	-230	243
	MIM (' k)	107	-84	103	-81	87	-69	72
	5/3 [ML + I] (' k)	797	-645	803	-627	660	-498	525
	Ma (' k)	1,284	-1,323	1,307	-1246	1,019	-933	816
*	Mu (' k)	2,210	–	2,688	–	2,688	–	2,353
	fs D non-comp (ksi)	7.3	-14.2	7.7	-12.6	4.7	-8.3	3.9
	fs D (comp) (ksi)	0.8	-1.9	0.9	-1.7	0.5	-1.1	0.4
	fs 5/3 [ML + MI] (ksi)	20.7	-21.7	20.9	-21.1	17.2	-16.8	13.7
	fs (Overload) (ksi)	28.8	-37.8	29.5	-35.4	22.4	-26.2	18
**	fs (Total) (ksi)	–	-49.1	–	-46	–	-34.1	–
	VR (k)	48.7	52.4	42.2	53.1	43.8	54.8	46.4

* Compact section
** Braced non-compact and partially braced section

INTERIOR GIRDER REACTION TABLE (GIRDER 8)						
		W. Abut.	Pier 1	Pier 2	Pier 3	E. Abut
RD	(k)	34.4	74.4	69.3	57.1	28.5
RL	(k)	44.4	52.4	52.2	51.8	41.4
RI	(k)	13.3	15.7	15.6	15.5	12.3
RTotal	(k)	92.1	142.5	137.1	124.4	82.2

Is, Ss: Non-composite moment of inertia and section modulus of the steel section used for computing fs(Total and Overload) due to non-composite dead loads (in.⁴ and in.³).

Ic(n), Sc(n): Composite moment of inertia and section modulus of the steel and deck based upon the modular ratio, "n", used for computing fs(Total and Overload) due to short-term composite live loads (in.⁴ and in.³).

Ic(3n), Sc(3n): Composite moment of inertia and section modulus of the steel and deck based upon 3 times the modular ratio, "3n", used for computing fs(Total and Overload) due to long-term composite (superimposed) dead loads (in.⁴ and in.³).

Ic(cr), Sc(cr): Composite moment of inertia and section modulus of the steel and longitudinal deck reinforcement, used for computing fs (Total and Overload) in cracked sections, due to both short-term composite live loads and long-term composite (superimposed) dead loads (in.⁴ and in.³).

Z: Plastic Section Modulus of the steel section in non-composite areas (in.³).

wD: Un-factored non-composite dead load (kips/ft.).

MD: Un-factored moment due to non-composite dead load (kip-ft.).

sD: Un-factored long-term composite (superimposed) dead load (kips/ft.)

MsD: Un-factored moment due to long-term composite (superimposed) dead load (kip-ft.).

ML: Un-factored live load moment (kip-ft.).

MI: Un-factored moment due to impact (kip-ft.).

Ma: Factored design moment (kip-ft.).
$1.3\ [M_D + M_{sD} + \frac{5}{3}(M_L + M_I)]$

Mu: Compact composite moment capacity according to AASHTO LFD 10.50.1.1 or compact non-composite moment capacity according to AASHTO LFD 10.48.1 (kip-ft.).

fs (Overload): Sum of stresses as computed from the moments below (ksi).
$M_D + M_{sD} + \frac{5}{3}(M_L + M_I)$

fs (Total): Sum of stresses as computed from the moments below on non-compact section (ksi).
$1.3\ [M_D + M_{sD} + \frac{5}{3}(M_L + M_I)]$

VR: Maximum L + impact shear range within the composite portion of the span for stud shear connector design (kips).

MODEL: Default
FILE NAME: P:\4312-VBM\CLugageRehab\CADD\Structural_SN 072-0168_Adam SL Final Plans\0720168-68E44-024-NomRecTable.dgn

MODJESKI and MASTERS

USER NAME =	DESIGNED - YSS	REVISED -	
	CHECKED - RLM	REVISED -	
PLOT SCALE =	DRAWN - ELK	REVISED -	
PLOT DATE =	CHECKED - RLM	REVISED -	

STATE OF ILLINOIS
DEPARTMENT OF TRANSPORTATION

MOMENT AND REACTION TABLES
STRUCTURE NO. 072-0168

SHEET S24 OF S32 SHEETS

F.A.P. RTE.	SECTION	COUNTY	TOTAL SHEETS	SHEET NO.
317	(14HB-1)BRR	PEORIA	418	162
		CONTRACT NO. 68E44		
	ILLINOIS	FED. AID PROJECT		

3/3/2025 9:43:25 AM

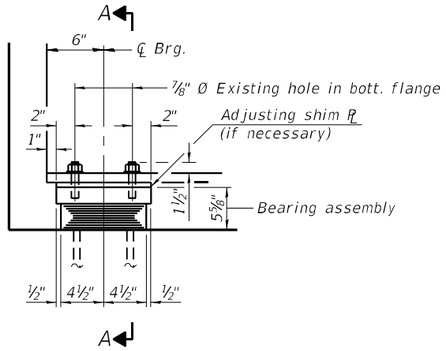

ELEVATION AT ABUT.

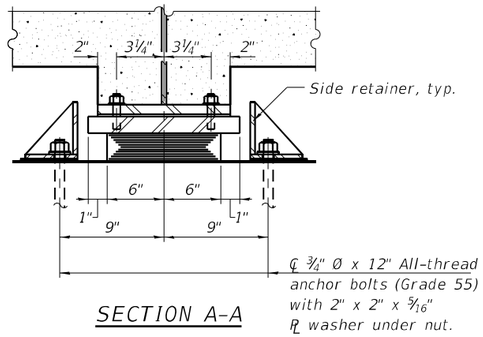

SECTION A-A

WEST ABUTMENT-TYPE I ELASTOMERIC EXP. BRG.

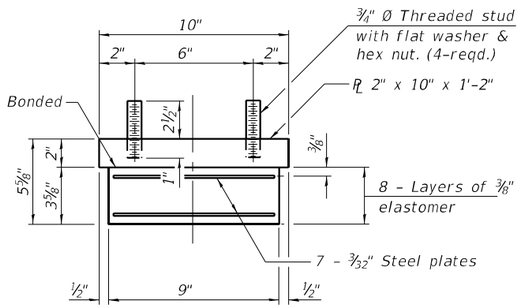

BEARING ASSEMBLY

Note:
Shim plates shall not be placed under bearing assembly.

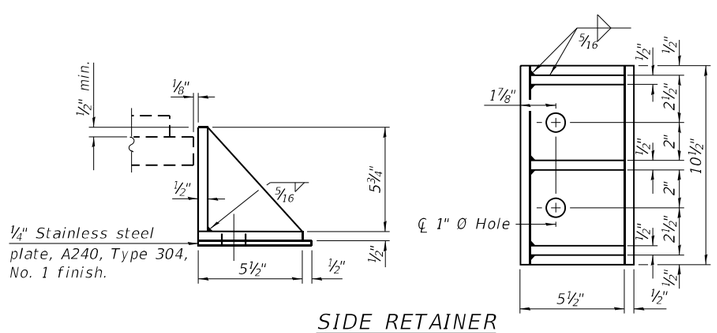

SIDE RETAINER

Equivalent rolled angle with stiffeners will be allowed in lieu of welded plates.

Notes:

Bearing replacements shall be performed after existing deck removal and prior to new deck & diaphragm placement.

Burn existing anchor bolts flush with existing concrete surface. Grind existing anchor bolt smooth and seal with epoxy. Cost included with "Jack and Remove Existing Bearings".

The structural steel plates of the Bearing Assembly shall conform to the requirements of AASHTO M270 Grade 50.

Two ⅛" adjusting shims shall be provided for each bearing in addition to all other plates or shims and placed as shown on bearing details.

Side retainers and stainless steel plates shall be included in the cost of Elastomeric Bearing Assembly, Type I.

All bearing plates, side retainers, threaded rods, anchor bolts, nuts, and washers, except stainless steel plates, shall be galvanized according to AASHTO M111 or M232, as applicable.

Maximum service dead load reaction per bearing with deck weight included is 25 kips.

The jack capacity provided shall be at a minimum 150% of the maximum service dead load reaction.

BILL OF MATERIAL

Item	Unit	Total
Elastomeric Bearing Assembly, Type 1	Each	10
Anchor Bolts, ¾"	Each	40
Jack and Remove Existing Bearings	Each	10

I-2E-1

5/15/2023

MODEL: Default
FILE NAME: P:\4312-VBM-CLugageRehab\CADD\Structural_SN 072-0168_Adam SL_Final Plans\0720168-68E44-025-WAbutBrgDtls.dgn

MODJESKI and MASTERS

USER NAME =	DESIGNED - JAD	REVISED -	
	CHECKED - MAP	REVISED -	
PLOT SCALE =	DRAWN - AEC	REVISED -	
PLOT DATE =	CHECKED - JAD	REVISED -	

STATE OF ILLINOIS
DEPARTMENT OF TRANSPORTATION

WEST ABUTMENT BEARING DETAILS
STRUCTURE NO. 072-0168

SHEET S25 OF S32 SHEETS

F.A.P. RTE.	SECTION	COUNTY	TOTAL SHEETS	SHEET NO.
317	(14HB-1)BRR	PEORIA	418	163
		CONTRACT NO. 68E44		
		ILLINOIS	FED. AID PROJECT	

2/12/2025 8:38:37 PM

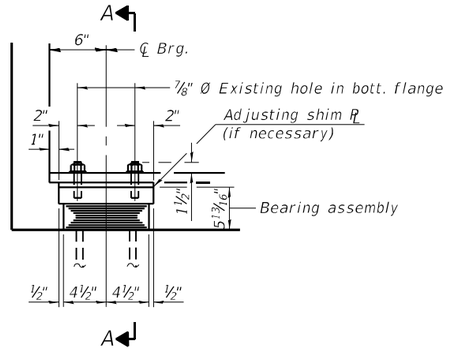

ELEVATION AT ABUT.

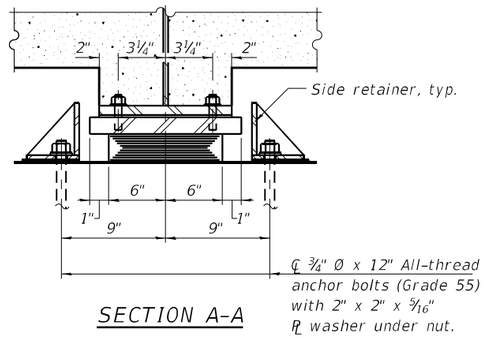

SECTION A-A

EAST ABUTMENT-TYPE I ELASTOMERIC EXP. BRG.

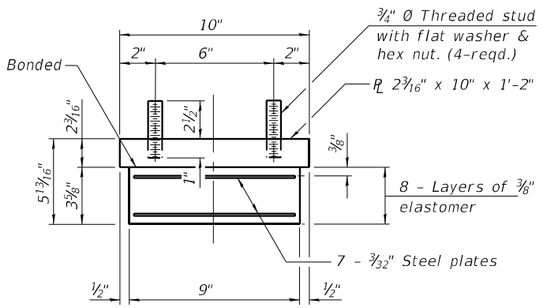

BEARING ASSEMBLY

Note:
Shim plates shall not be placed under bearing assembly.

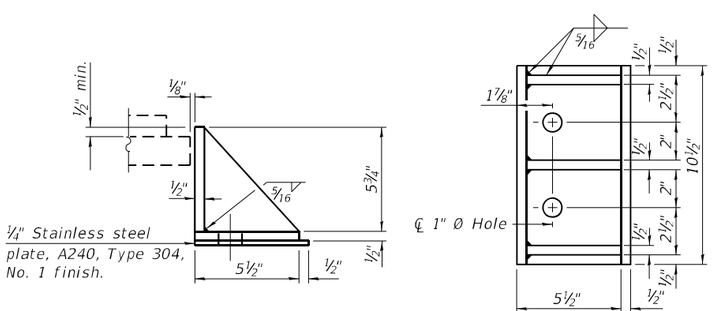

SIDE RETAINER

Equivalent rolled angle with stiffeners will be allowed in lieu of welded plates.

Notes:

Bearing replacements shall be performed after existing deck removal and prior to new deck & diaphragm placement.

Burn existing anchor bolts flush with existing concrete surface. Grind existing anchor bolt smooth and seal with epoxy. Cost included with "Jack and Remove Existing Bearings".

The structural steel plates of the Bearing Assembly shall conform to the requirements of AASHTO M270 Grade 50.

Two 1/8" adjusting shims shall be provided for each bearing in addition to all other plates or shims and placed as shown on bearing details.

Side retainers and stainless steel plates shall be included in the cost of Elastomeric Bearing Assembly, Type I.

All bearing plates, side retainers, threaded rods, anchor bolts, nuts, and washers, except stainless steel plates, shall be galvanized according to AASHTO M111 or M232, as applicable.

Maximum service dead load reaction per bearing with deck weight included is 18 kips.

The jack capacity provided shall be at a minimum 150% of the maximum service dead load reaction.

BILL OF MATERIAL

Item	Unit	Total
Elastomeric Bearing Assembly, Type I	Each	10
Anchor Bolts, 3/4"	Each	40
Jack and Remove Existing Bearings	Each	10

I-2E-1

5/15/2023

MODEL: Default
FILE NAME: P:\4312-VBM-CL\LugageRehab\CADD\Structural_SN 072-0168_Adam SL_Final Plans\0720168-68E44-026-EAbutBrgDtls.dgn

MODJESKI and MASTERS

USER NAME =	DESIGNED - JAD	REVISED -	
	CHECKED - MAP	REVISED -	
PLOT SCALE =	DRAWN - AEC	REVISED -	
PLOT DATE =	CHECKED - JAD	REVISED -	

STATE OF ILLINOIS
DEPARTMENT OF TRANSPORTATION

EAST ABUTMENT BEARING DETAILS
STRUCTURE NO. 072-0168

SHEET S26 OF S32 SHEETS

F.A.P. RTE.	SECTION	COUNTY	TOTAL SHEETS	SHEET NO.
317	(14HB-1)BRR	PEORIA	418	164

CONTRACT NO. 68E44

ILLINOIS FED. AID PROJECT

2/12/2025 8:38:41 PM

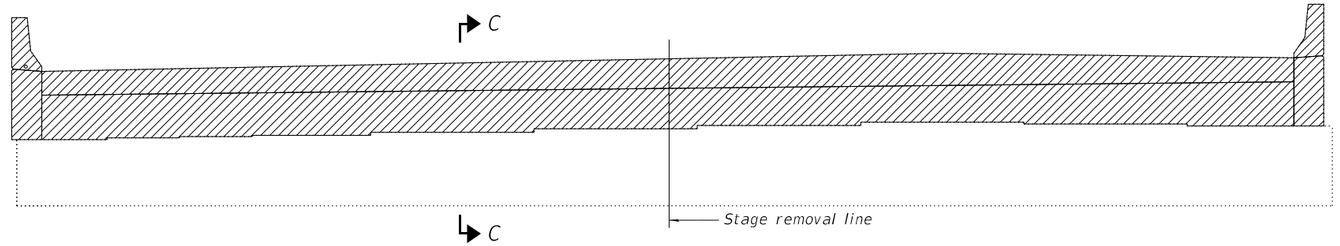

ELEVATION

East Abutment shown looking east,
West Abutment similiar

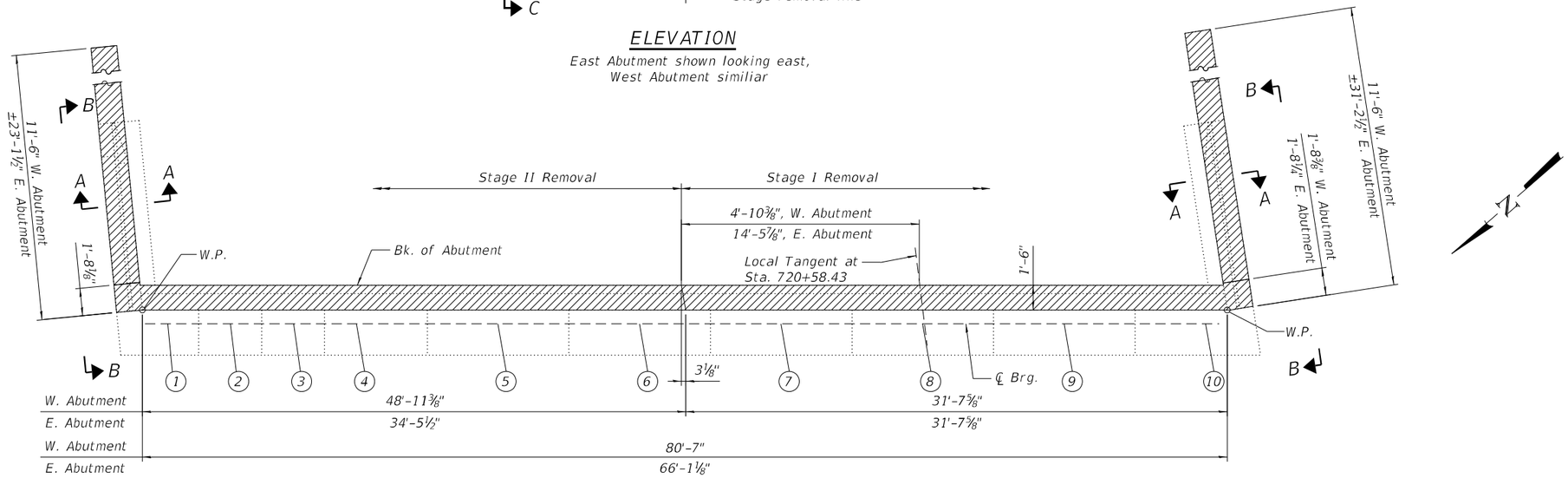

ABUTMENT PLAN

East Abutment shown,
West Abutment similiar

WINGWALL REMOVAL ELEVATION

Abutment	Wingwall	Elev. A	Elev. B
West	North	507.56	507.71
West	South	509.15	509.40
East	North	503.44	503.21
East	South	504.13	503.89

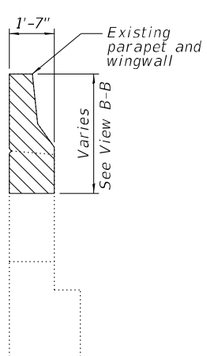

SECTION A-A

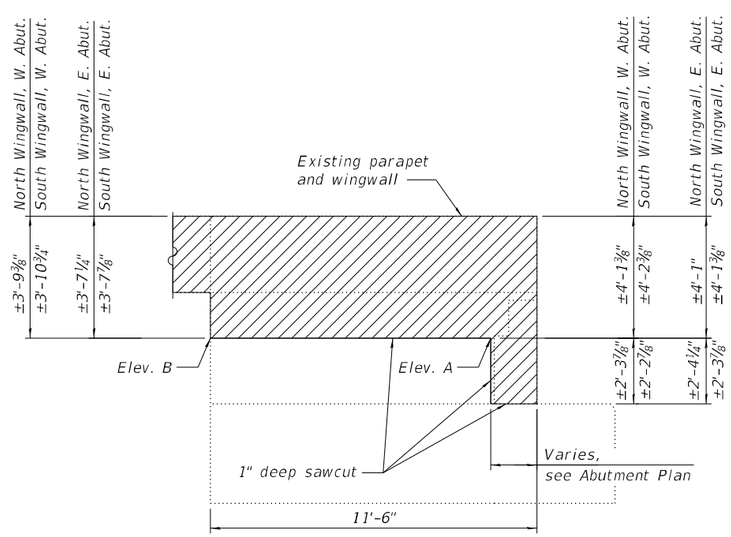

VIEW B-B

North Wingwall shown, South Wingwall opposite hand

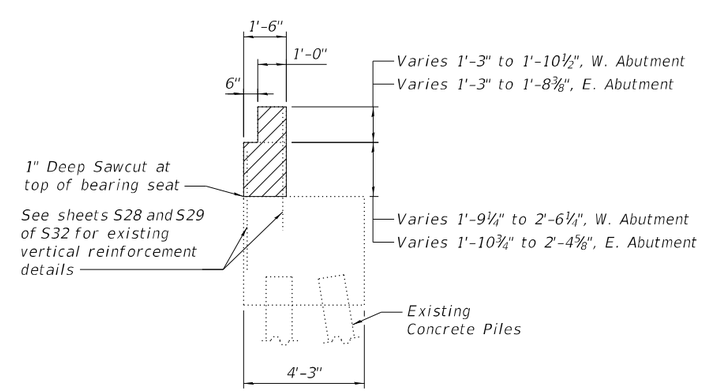

SECTION C-C

Horiz. dim. at Rt. ∠'s

LEGEND:

Concrete Removal

EAST AND WEST ABUTMENTS BILL OF MATERIAL

Item	Unit	Total
Concrete Removal	Cu. Yd.	29.6

Note:
Removal of the existing parapet shall be included with Removal of Existing Concrete Deck No. 1.

MODEL: Default
FILE NAME: P:\4312-WBM\CD\LegacyRehab\CADD\Structural_SN 072-0168_Adam St_Final Plans\0720168-68E44-027-AbutConRemDtls.dgn
3/3/2025 8:51:25 AM

MODJESKI and MASTERS

USER NAME =	DESIGNED - UB	REVISED -	
	CHECKED - YSS	REVISED -	
PLOT SCALE =	DRAWN - AEC	REVISED -	
PLOT DATE =	CHECKED - UB	REVISED -	

STATE OF ILLINOIS
DEPARTMENT OF TRANSPORTATION

ABUTMENT CONCRETE REMOVAL DETAILS
STRUCTURE NO. 072-0168

SHEET S27 OF S32 SHEETS

F.A.P. RTE.	SECTION	COUNTY	TOTAL SHEETS	SHEET NO.
317	(14HB-1)BRR	PEORIA	418	165
		CONTRACT NO. 68E44		
		ILLINOIS FED. AID PROJECT		

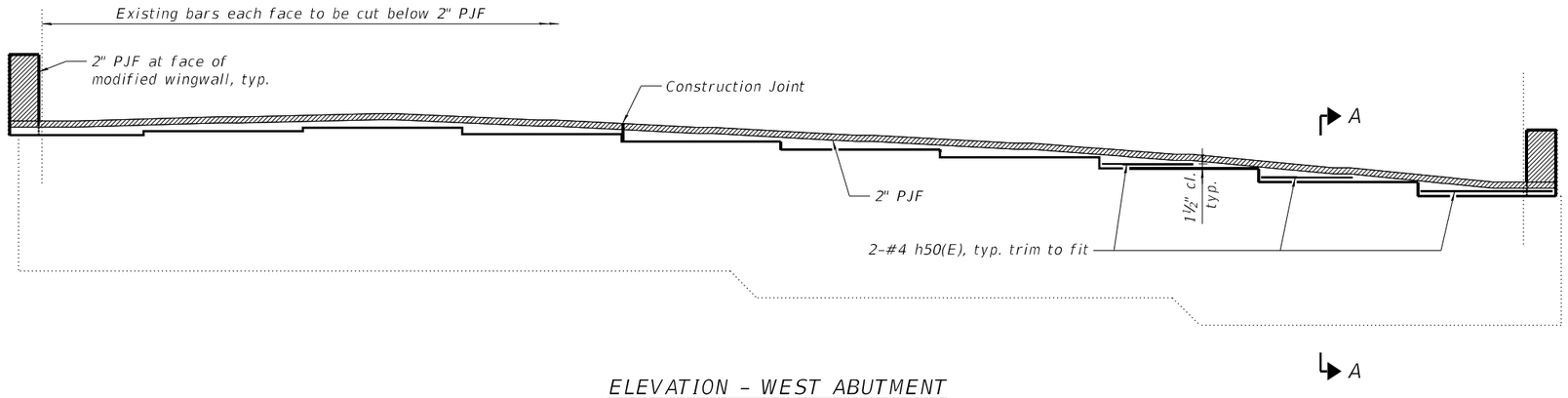

ELEVATION - WEST ABUTMENT

Looking west

Beams and bearings not shown for clarity.

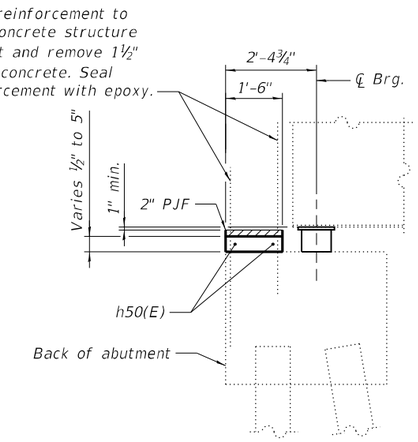

SECTION A-A

Horiz. dim. at Rt. ∠'s

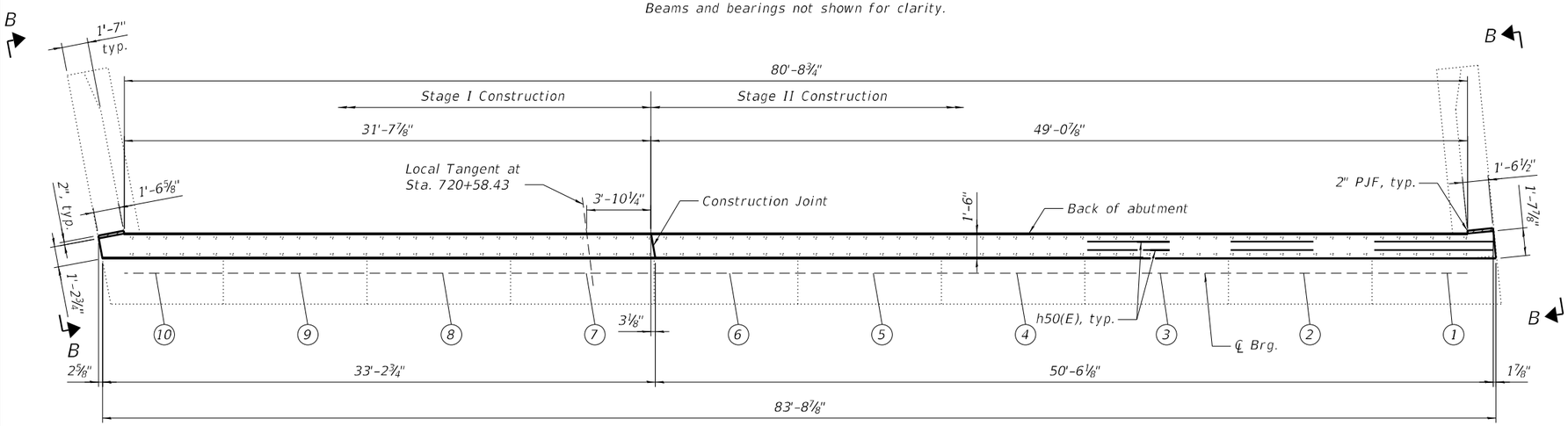

ABUTMENT PLAN

WEST ABUTMENT BILL OF MATERIAL

Bar	No.	Size	Length	Shape
h50(E)	6	4	7'-1"	
Concrete Structures			Cu. Yd.	1.1
Reinforcement Bars, Epoxy Coated			Pound	30

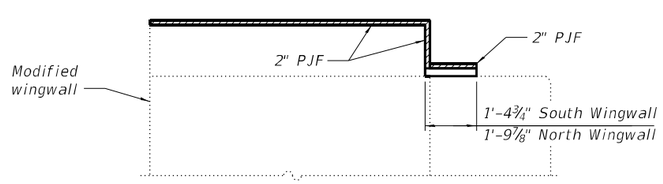

VIEW B-B

South Wingwall shown, North Wingwall opposite hand.

Notes:

For concrete removal, see sheet S27 of S32.

Existing reinforcement bars extending into the removal area shall be cleaned, straightened, and incorporated into the new construction. Cost included with Concrete Removal. Any reinforcement bars that are damaged during concrete removal shall be replaced with an approved bar splicer or anchorage system at the Contractor's expense.

MODEL: Default
FILE NAME: P:\4312-WBMcCLugageRehab\CADD\Structural_SN 072-0168_Adam St_Final Plans\0720168-68E44-028-WAbutment.dgn

2/12/2025 8:38:49 PM

MODJESKI and MASTERS

USER NAME =	DESIGNED - UB	REVISED -	
	CHECKED - YSS	REVISED -	
PLOT SCALE =	DRAWN - AEC	REVISED -	
PLOT DATE =	CHECKED - YSS	REVISED -	

STATE OF ILLINOIS
DEPARTMENT OF TRANSPORTATION

WEST ABUTMENT
STRUCTURE NO. 072-0168

SHEET S28 OF S32 SHEETS

F.A.P. RTE.	SECTION	COUNTY	TOTAL SHEETS	SHEET NO.
317	(14HB-1)BRR	PEORIA	418	166
		CONTRACT NO. 68E44		
	ILLINOIS	FED. AID PROJECT		

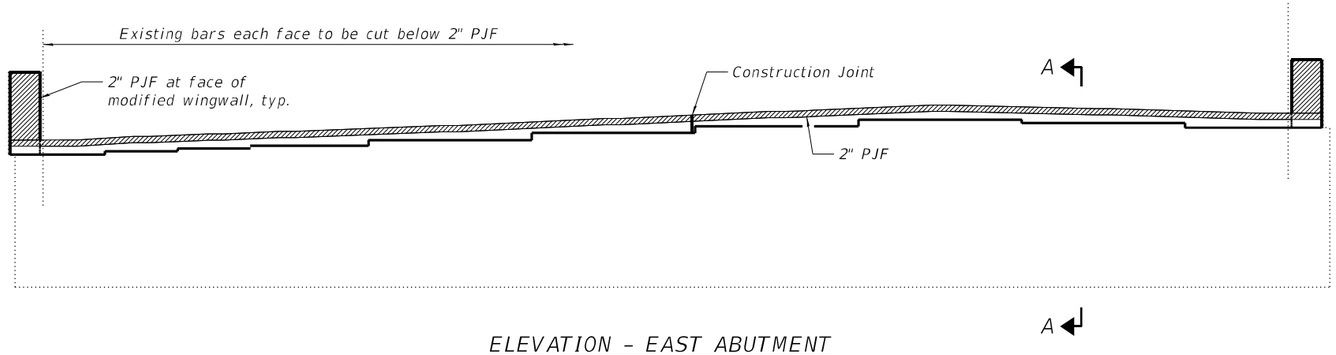

ELEVATION - EAST ABUTMENT

Looking east

Beams and bearings not shown for clarity.

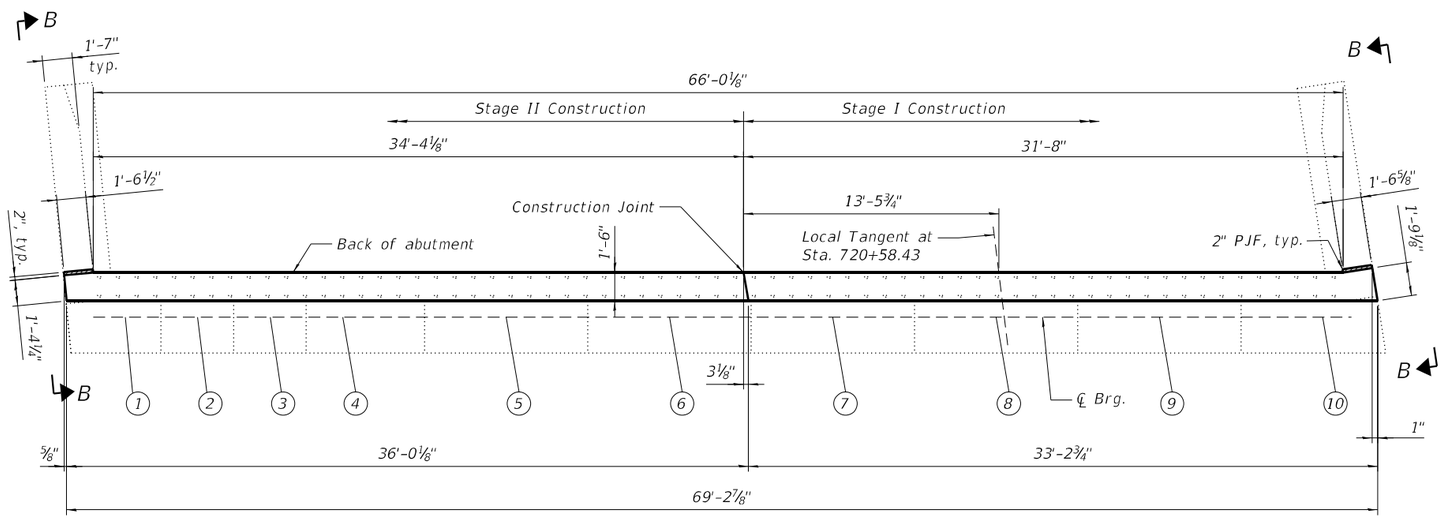

ABUTMENT PLAN

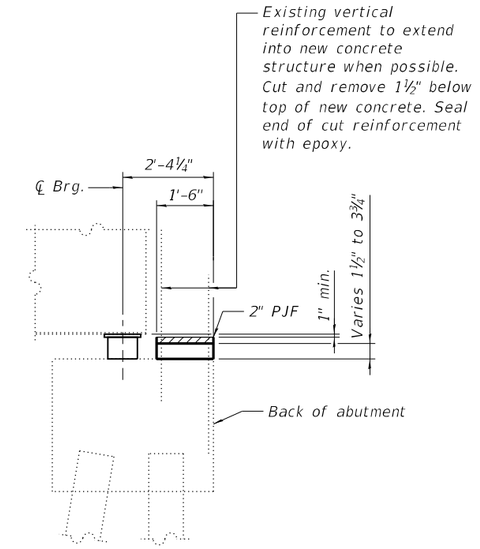

SECTION A-A

Horiz. dim. at Rt. ∠'s

EAST ABUTMENT BILL OF MATERIAL

Item	Unit	Total
Concrete Structures	Cu. Yd.	0.9

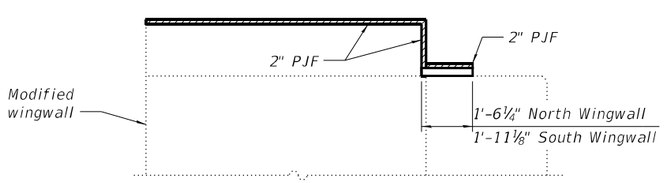

VIEW B-B

North Wingwall shown, South Wingwall opposite hand.

Notes:

For concrete removal, see sheet S27 of S32.

Existing reinforcement bars extending into the removal area shall be cleaned, straightened, and incorporated into the new construction. Cost included with Concrete Removal. Any reinforcement bars that are damaged during concrete removal shall be replaced with an approved bar splicer or anchorage system at the Contractor's expense.

MODEL: Default
FILE NAME: P:\4312-VBM\CLugageRehab\CADD\Structural_SN 072-0168_Adam St_Final Plans\0720168-68E44-029-EAbutment.dgn

MODJESKI and MASTERS

USER NAME =	DESIGNED - UB	REVISED -	
	CHECKED - YSS	REVISED -	
PLOT SCALE =	DRAWN - AEC	REVISED -	
PLOT DATE =	CHECKED - YSS	REVISED -	

STATE OF ILLINOIS
DEPARTMENT OF TRANSPORTATION

EAST ABUTMENT
STRUCTURE NO. 072-0168

SHEET S29 OF S32 SHEETS

F.A.P. RTE.	SECTION	COUNTY	TOTAL SHEETS	SHEET NO.
317	(14HB-1)BRR	PEORIA	418	167

CONTRACT NO. 68E44

ILLINOIS FED. AID PROJECT

2/12/2025 8:38:55 PM

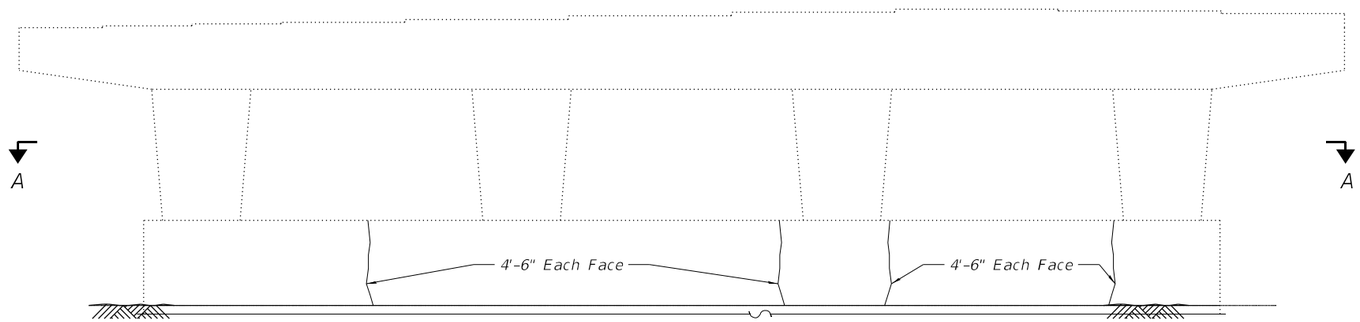

PIER 2 PARTIAL ELEVATION

(West Face)

Note:
Crack lengths shown are estimated. The limits of repair will be determined in the field by the Engineer.

LEGEND:

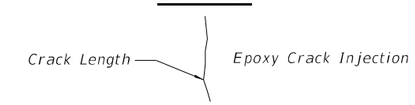

SECTION A-A

BILL OF MATERIAL

Item	Unit	Total
Epoxy Crack Injection	Foot	46

MODEL: Default
FILE NAME: P:\4312-WBM-CL\gageRehab\CADD\Structural_SN 072-0168_Adam St_Final Plans\0720168-68E44-030-SubstrRepDtls.dgn

2/12/2025 8:39:01 PM

MODJESKI and MASTERS

USER NAME =	DESIGNED - PMS	REVISED -	
	CHECKED - RLM	REVISED -	
PLOT SCALE =	DRAWN - ATH	REVISED -	
PLOT DATE =	CHECKED - RLM	REVISED -	

STATE OF ILLINOIS
DEPARTMENT OF TRANSPORTATION

SUBSTRUCTURE REPAIR DETAILS
STRUCTURE NO. 072-0168

SHEET S30 OF S32 SHEETS

F.A.P. RTE.	SECTION	COUNTY	TOTAL SHEETS	SHEET NO.
317	(14HB-1)BRR	PEORIA	418	168
		CONTRACT NO. 68E44		
	ILLINOIS	FED. AID PROJECT		

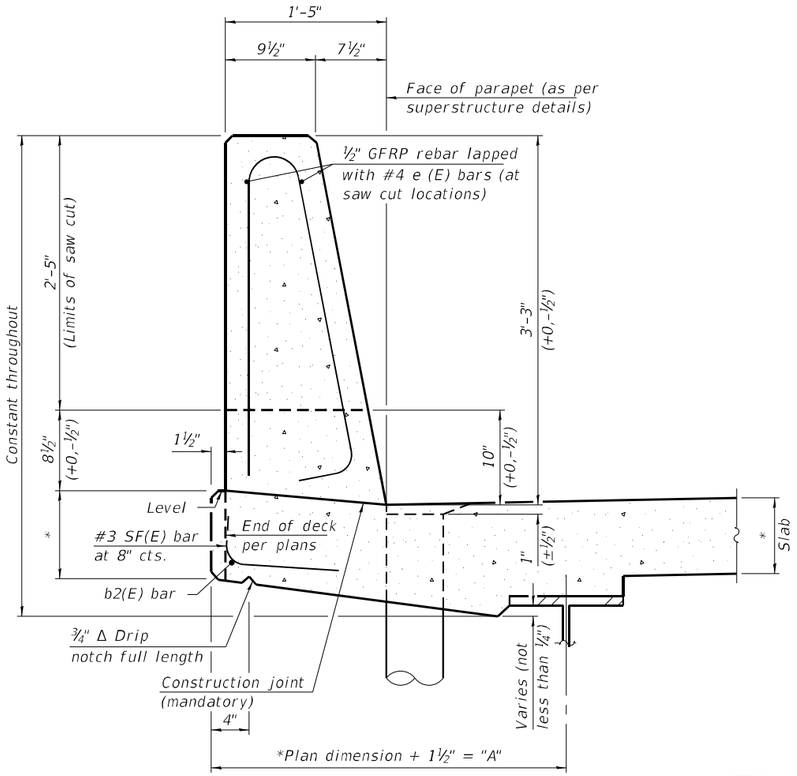

39" CONSTANT-SLOPE PARAPET SECTION

(Showing dimensions, d(E), and ½" Ø GFRP rebar)

STEEL SUPERSTRUCTURES

*See Superstructure Details.

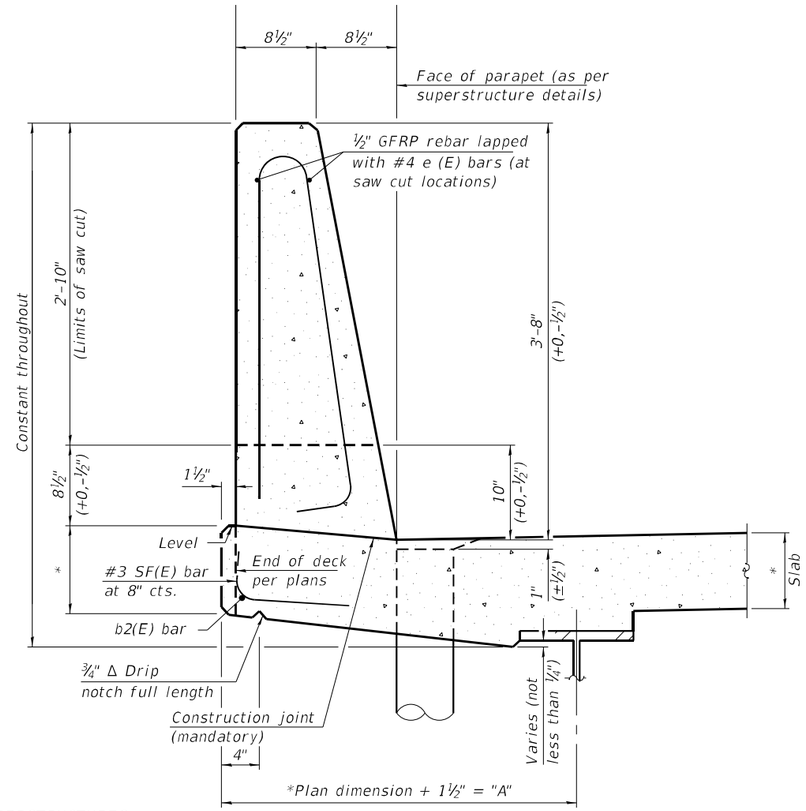

44" CONSTANT-SLOPE PARAPET SECTION

(Showing dimensions, d(E), and ½" Ø GFRP rebar)

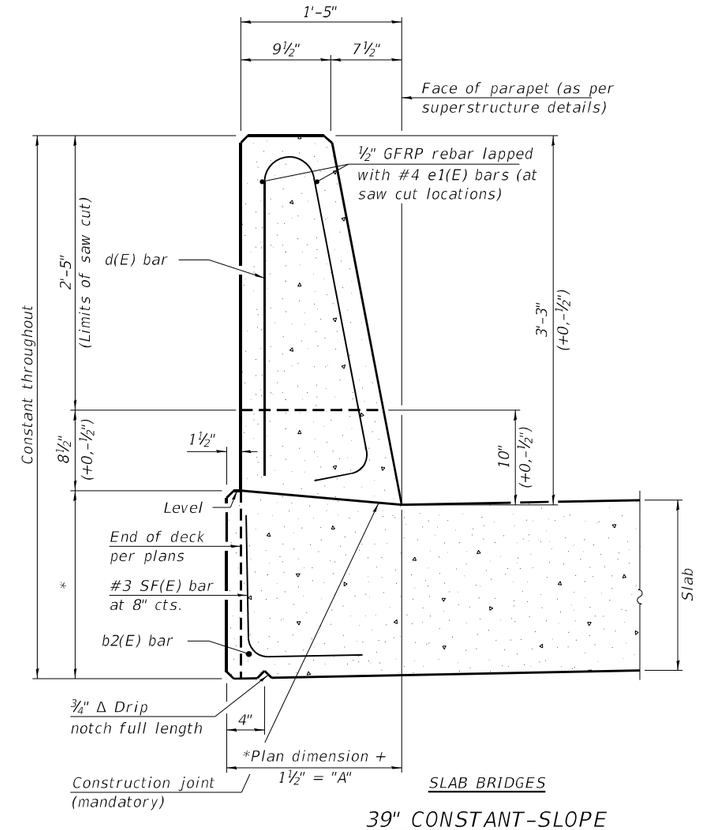

SLAB BRIDGES

39" CONSTANT-SLOPE PARAPET SECTION

(Showing dimensions, d(E), and ½" Ø GFRP rebar)

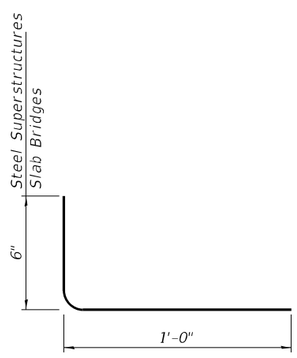

SF(E) BAR

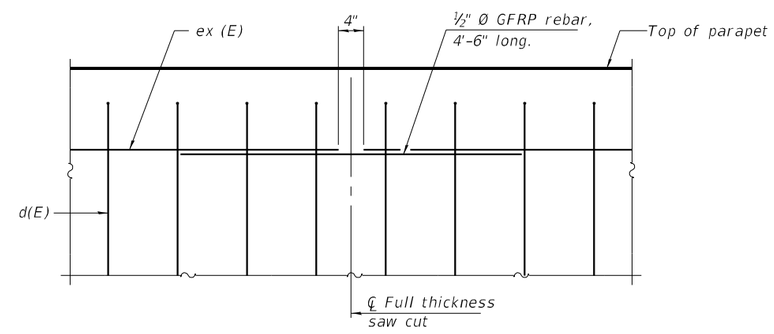

DETAIL - GFRP REBAR STIFFENING ELEVATION

(Place as shown in parapet section at each parapet joint location.)

Notes:

All dimensions shall remain the same as shown on superstructure details, except dimension "A" which is to be revised as shown.

Additional concrete needed to revise dimension "A" (39" and 44" parapets):

Steel Superstructures: 0.00348 cu. yds./ft.

Slab Bridge Superstructures: cu. yds./ft.

Place full depth aluminum sheets as shown on superstructure details.

Replace all cork joint filler locations with a full thickness saw cut.

Steel and slab superstructures shown. Other superstructure types similar.

MODEL: Default
FILE NAME: P:\4312-VBMcCLugageRehab\CADD\Structural_SN 072-0168_Adam SL_Final Plans\0720168-68E44-031-ConcParaSlipForm.dgn

MODJESKI and MASTERS	USER NAME =	DESIGNED - UB	REVISED -
		CHECKED - RLM	REVISED -
	PLOT SCALE =	DRAWN - AEC	REVISED -
	PLOT DATE =	CHECKED - UB	REVISED -

STATE OF ILLINOIS
DEPARTMENT OF TRANSPORTATION

CONCRETE PARAPET SLIPFORMING OPTION
STRUCTURE NO. 072-0168

SHEET S31 OF S32 SHEETS

F.A.P. RTE.	SECTION	COUNTY	TOTAL SHEETS	SHEET NO.
317	(14HB-1)BRR	PEORIA	418	169

CONTRACT NO. 68E44

ILLINOIS | FED. AID PROJECT

3/7/2025 8:16:07 AM

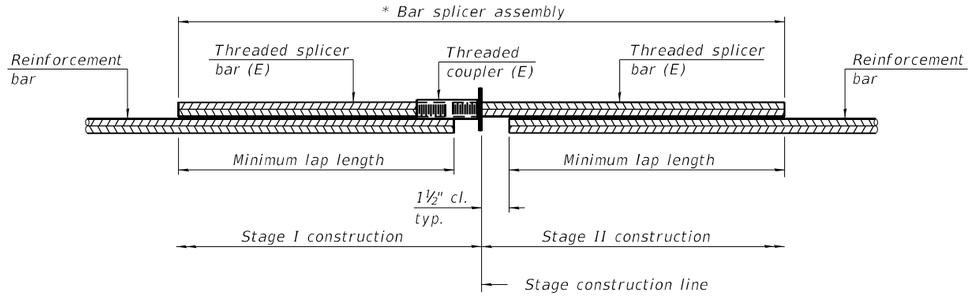

STANDARD BAR SPLICER ASSEMBLY PLAN

Only bar splicer assemblies as presented on the approved QPL list may be used.

Threaded splicer bar length = min. lap length + 1½" + thread length

* Epoxy not required on Bar Splicer Assembly components used in conjunction with black bars.

Location	Bar size	No. assemblies required	Minimum lap length
Slab	#5	681	3'-6"
West Diaphragm	#6	10	4'-0"
West Diaphragm	#4	2	2'-5"
East Diaphragm	#6	10	4'-0"
East Diaphragm	#4	2	2'-5"
West Approach slab	#5	46	3'-4"
West Approach slab	#8	60	4'-9"
West Approach footing	#5	40	3'-0"
East Approach slab	#5	47	3'-4"
East Approach slab	#8	62	4'-9"
East Approach footing	#5	56	3'-0"

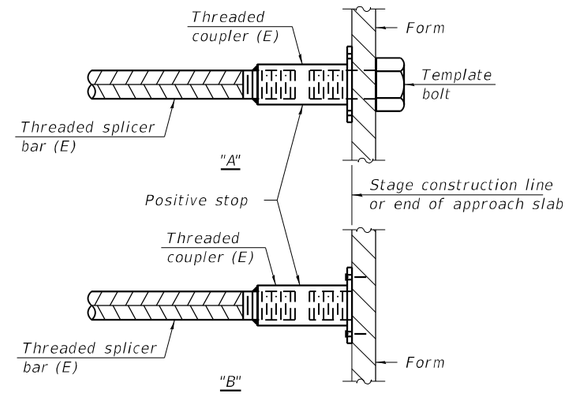

INSTALLATION AND SETTING METHODS

"A" : Set bar splicer assembly by means of a template bolt.
"B" : Set bar splicer assembly by nailing to wood forms or cementing to steel forms.
(E) : Indicates epoxy coating.

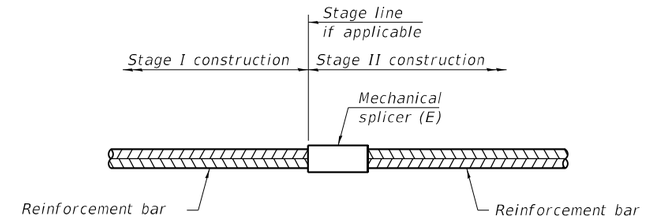

STANDARD MECHANICAL SPLICER

Location	Bar size	No. assemblies required

Notes:
Splicer bars shall be deformed with threaded ends and have a minimum 60 ksi yield strength.
All reinforcement shall be lapped and tied to the splicer bars.
Bar splicer assemblies shall be epoxy coated according to the requirements for reinforcement bars. See Section 508 of the Standard Specifications.
See approved list of bar splicer assemblies and mechanical splicers for alternatives.

BSD-1 5-15-2023

MODJESKI and MASTERS

USER NAME =	DESIGNED - UB	REVISED -	
	CHECKED - YSS	REVISED -	
PLOT SCALE =	DRAWN - AEC	REVISED -	
PLOT DATE =	CHECKED - YSS	REVISED -	

STATE OF ILLINOIS
DEPARTMENT OF TRANSPORTATION

BAR SPLICER ASSEMBLY AND MECHANICAL SPLICER DETAILS
STRUCTURE NO. 072-0168

SHEET S32 OF S32 SHEETS

F.A.P. RTE.	SECTION	COUNTY	TOTAL SHEETS	SHEET NO.
317	(14HB-1)BRR	PEORIA	418	170

CONTRACT NO. 68E44

ILLINOIS FED. AID PROJECT

MODEL: Default
FILE NAME: P:\4312-WBMcCLugageRehab\CADD\Structural_SN 072-0168_Adam St_Final Plans\0720168-68E44-032-BarSplicer.dgn
2/12/2025 8:39:11 PM

Bench Marks: BM2516: Chiseled square on top of the west end of the northerly concrete barrier wall on the west abutment of westbound bridge of War Memorial Drive (US 150) over NE Adams Street (IL 29) at the exit ramp to NE Adams Street (IL 29). N: 1,478,049.48, E: 2,466,052.99, Elevation 511.94.

BM2519: Brass disk grouted in concrete median at easterly back of curb of northbound NE Adams Street (IL 29) approximately 68' south of south face of bridge for EB US Route 150 over NE Adams Street (IL 29). N: 1,477,823.80 E: 2,466,074.68 ELEV. 488.65.

BM6269: Chiseled square on top of east end of concrete barrier wall where it connects to guardrail in center median turnaround along US 150, east of the Illinois River. N: 1,475,847.93; E: 2,471,243.98, Elevation 464.49.

All elevations shown refer to NAVD 1988 Datum unless noted otherwise.

Existing Structure: The WB McClugage Bridge, S.N. 090-0115, was constructed in 1982 (F.A. Route 49, Section 15B-1,D,F&E) and the superstructure in Spans 3 thru 5 was reconstructed in 1995. The 21-span structure consists of a simply supported multi-beam span, a two-span continuous multi-girder unit and two three-span continuous haunched two-girder units on the west approach; a three-span cantilevered through truss with a suspended navigation span; and three three-span continuous haunched multi-girder units on the east approach. The total structure length is approximately 4,745' back-to-back of abutments and has a typical width of 42'-0" out-to-out of deck. The maximum out-to-out width of the flared deck at the west abutment is approximately 63'-10". The structure carries three-lanes and the minimum clear width between parapets is 38'-10".

The substructure units consist of concrete abutments and piers. The West Abutment and Piers 2 thru 4 are supported on concrete piles. Piers 5 thru 21 and the East Abutment are supported on steel H-piles. Pier 3 is skewed approximately 3 degrees.

Traffic: Bridge to be closed to traffic during construction.

Salvage: No salvage.

SCOPE OF WORK

1. Remove and replace existing concrete deck.
2. Make new deck composite by installing shear studs to select members.
3. Repair steel superstructure members.
4. Clean and paint entire steel superstructure and existing fixed bearings.
5. Replace select expansion bearings.
6. Clean clogged closed drainage system.
7. Remove and replace access platforms for navigation lights.
8. Remove and replace existing bridge approach slabs.
9. Perform concrete repairs to substructure.

LOADING HS20-44 (New Const.)

Allow 25#/sq. ft. for future wearing surface.

DESIGN SPECIFICATIONS (New Const.)

2002 AASHTO Standard Specifications for Highway Bridges, 17th Edition

DESIGN STRESSES

FIELD UNITS (New Const.)

f'c = 4,000 psi
fy = 60,000 psi (reinforcement)
fy = 50,000 psi (M270 Grade 50)
fy = 36,000 psi (M270 Grade 36)

FIELD UNITS (Exist. Const. - Original)

fc = 1,400 psi
fs = 20,000 psi (reinforcement)
= 24,000 psi (reinforcement)
fs = 20,000 psi (structural steel)
fs = 27,000 psi (structural steel)

FIELD UNITS (Exist. Const. - 1995 Reconst.)

f'c = 3,500 psi
fy = 60,000 psi (reinforcement)
fy = 50,000 psi (structural steel)
fy = 36,000 psi (structural steel)

SEISMIC DATA

Seismic Performance Category (SPC) = A
Horizontal Bedrock Acceleration Coefficient (A) = 0.04g
Site Coefficient (S) = 1.0

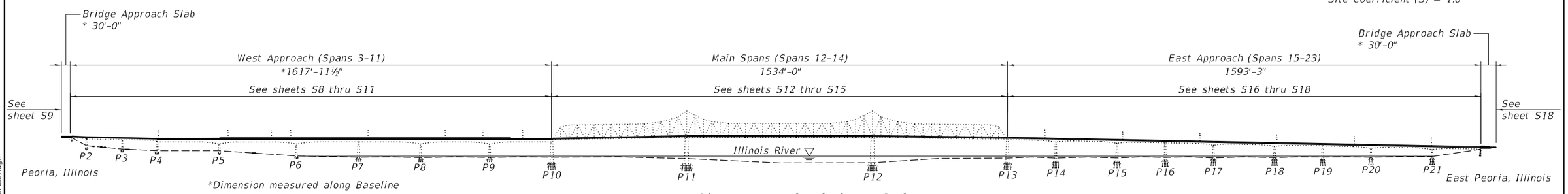

ELEVATION - WB McCLUGAGE BRIDGE

(Looking North)

APPROVED
For Structural Adequacy Only
Engineer of Bridges & Structures

RACHEL L. MERTZ
081-006526
LICENSED
STRUCTURAL
ENGINEER
STATE OF ILLINOIS

RACHEL L. MERTZ, S.E.
DATE SIGNED 3/14/2025
LICENSE EXP DATE 11/30/2026

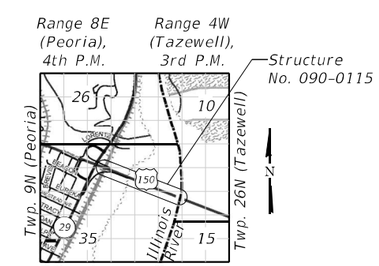

LOCATION SKETCH

DESIGN SCOUR ELEVATION TABLE

Event/Limit State	Design Scour Elevations (ft.)																	Item 113
	Pier 5	Pier 6	Pier 7	Pier 8	Pier 9	Pier 10	Pier 11	Pier 12	Pier 13	Pier 14	Pier 15	Pier 16	Pier 17	Pier 18	Pier 19	Pier 20	Pier 21	
Q100	450.1	436.4	430.5	430.3	430.3	424.8	398.0	385.3	398.7	413.1	416.0	420.2	420.0	420.5	417.5	421.6	424.3	5
Q200	449.3	435.6	429.7	429.5	429.5	422.6	397.1	384.4	397.8	412.9	415.8	420.0	419.8	420.3	417.3	421.4	424.1	
Design	449.7	434.7	427.7	426.7	426.7	403.2	396.7	385.3	398.7	413.1	413.7	418.7	420.0	420.5	417.5	421.6	424.3	

GENERAL ELEVATION
W.B. U.S. ROUTE 150 (W.B. McCLUGAGE BRIDGE)
OVER THE ILLINOIS RIVER (PUBLIC WATERS)
AND TZPR RAILROAD
F.A.P. ROUTE 317-SECTION (15B-1)BP,BRR
PEORIA AND TAZEWELL COUNTIES
STATION 222+85.77
STRUCTURE NO. 090-0115

MODJESKI and MASTERS

USER NAME =	DESIGNED - YSS	REVISED -
	CHECKED - RLM	REVISED -
PLOT SCALE =	DRAWN - AEC	REVISED -
PLOT DATE =	CHECKED - YSS	REVISED -

STATE OF ILLINOIS
DEPARTMENT OF TRANSPORTATION

SHEET S1 OF S214 SHEETS

F.A.P. RTE.	SECTION	COUNTY	TOTAL SHEETS	SHEET NO.
317	(15B-1)BP,BRR	PEO/TAZ	418	171

CONTRACT NO. 68E44
ILLINOIS | FED. AID PROJECT

MODEL: Default
FILE NAME: P:\4312-WBMcCLugageRehab\CADD\Structural_SN 090-0115_WBMainBridge_Final Plans\0900115-68E44-001-GenElev.dgn
3/28/2025 1:22:47 PM

INDEX OF SHEETS

INDEX OF SHEETS (CONT.)

INDEX OF SHEETS (CONT.)

TOTAL BILL OF MATERIAL

ITEM	UNIT	SUPER	SUB	TOTAL
Concrete Removal	Cu Yd	-	14.2	14.2
Removal Of Existing Concrete Deck No. 2	Each	1	-	1
Protective Shield	Sq Yd	3,527	-	3,527
Floor Drains	Each	173	-	173
Concrete Structures	Cu Yd	-	44.5	44.5
Concrete Superstructure	Cu Yd	7,971.4	-	7,971.4
Protective Coat	Sq Yd	26,057	-	26,057
Concrete Superstructure (Approach Slab)	Cu Yd	153.2	-	153.2
Furnishing And Erecting Structural Steel	Pound	37,300	-	37,300
Stud Shear Connectors	Each	96,137	-	96,137
Reinforcement Bars, Epoxy Coated	Pound	2,029,400	7,960	2,037,360
Bar Splicers	Each	16,214	44	16,258
Mechanical Splicers	Each	53	-	53
Pedestrian Railing	Foot	519	-	519
Name Plates	Each	1	-	1
Preformed Joint Strip Seal	Foot	504	-	504
Finger Plate Expansion Joint, 5"	Foot	203.5	-	203.5
Finger Plate Expansion Joint, 6"	Foot	39.5	-	39.5
Fabric Reinforced Elastomeric Trough	Foot	270	-	270
Anchor Bolts, 1"	Each	144	-	144
Anchor Bolts, 1 1/4"	Each	68	-	68
Anchor Bolts, 1 1/2"	Each	16	-	16
Anchor Bolts, 2"	Each	16	-	16
Drainage System For Structures	L Sum	1	-	1
Concrete Sealer	Sq Ft	-	7,023	7,023
Epoxy Crack Injection	Foot	-	224	224
Jack And Remove Existing Bearings	Each	61	-	61
Containment And Disposal Of Lead Paint Cleaning Residues No. 1	L Sum	1	-	1
Cleaning And Painting Steel Bridge No. 2	L Sum	1	-	1
Structural Repair Of Concrete (Depth Equal To Or Less Than 5 Inches)	Sq Ft	-	1,830	1,830
Structural Repair Of Concrete (Depth Greater Than 5 Inches)	Sq Ft	-	83	83
Drainage Scuppers, DS-33	Each	2	-	2
Diamond Grinding (Bridge Section)	Sq Yd	19,562	-	19,562
Modular Expansion Joint 12"	Foot	43	-	43
Bolt Replacement	Each	65	-	65
Access Ladder	Each	5	-	5
Bridge Deck Grooving (Longitudinal)	Sq Yd	18,253	-	18,253
Structural Steel Removal	Pound	27,760	-	27,760
Structural Steel Repair	Pound	113,150	60	113,210
Containment And Disposal Of Non-Lead Paint Cleaning Residues No. 2	L Sum	1	-	1
Bar Terminators	Each	626	-	626
High Load Multi-Rotational Bearings, Disc, Guided Expansion-200K	Each	30	-	30
High Load Multi-Rotational Bearings, Disc, Guided Expansion-500K	Each	2	-	2
High Load Multi-Rotational Bearings, Disc, Guided Expansion-600K	Each	19	-	19
High Load Multi-Rotational Bearings, Disc, Guided Expansion-900K	Each	2	-	2
High Load Multi-Rotational Bearings, Disc, Guided Expansion-1250K	Each	4	-	4
Cleaning Drainage System	L Sum	1	-	1
Drainage Scuppers, DS-11	Each	119	-	119
High Load Multi-Rotational Bearings, Disc, Guided Expansion-1500K	Each	2	-	2
High Load Multi-Rotational Bearings, Disc, Guided Expansion-1750K	Each	2	-	2

MODJESKI and MASTERS

USER NAME =	DESIGNED - YSS	REVISED -	
	CHECKED - RLM	REVISED -	
PLOT SCALE =	DRAWN - AEC	REVISED -	
PLOT DATE =	CHECKED - RLM	REVISED -	

STATE OF ILLINOIS
DEPARTMENT OF TRANSPORTATION

INDEX OF SHEETS AND TOTAL BILL OF MATERIAL
STRUCTURE NO. 090-0115

SHEET S2 OF S214 SHEETS

F.A.P. RTE.	SECTION	COUNTY	TOTAL SHEETS	SHEET NO.
317	(15B-1)BP,BRR	PEO/TAZ	418	172
		CONTRACT NO. 68E44		
	ILLINOIS	FED. AID PROJECT		

MODEL: Default
FILE NAME: P:\4312-WBMcCluggageRehab\CADD\Structural_SN 090-0115_WBMainBridge_Final Plans\0900115-68E44-002-SHIndxBOM.dgn
3/14/2025 6:26:59 AM

GENERAL NOTES

Existing conduit for fiber optic utilities are attached to the underside of the bridge. Conduit is not expected to interfere with repairs and the Contractor shall take care to prevent damage to fiber optic conduit during construction. The Contractor can temporarily relocate fiber optic conduit during construction at his own expense with the approval of the Engineer. Fiber optic utilities are to remain in service during construction.

Fasteners shall be ASTM F3125 Grade A325 Type 1, mechanically galvanized bolts in painted areas, except as noted. Bolts 7/8 in. diameter, holes 15/16 in. diameter, unless otherwise noted. Fasteners connecting galvanized members or connecting a painted member to an unpainted galvanized member shall be ASTM F3125 Grade A325 Type 1, hot dip galvanized. See Special Provision for "Hot Dip Galvanizing for Structural Steel." Bolts 7/8 in. diameter, holes 15/16 in. diameter, unless otherwise noted.

Calculated weight of Furnishing and Erecting Structural Steel = 37,300 lbs (Grade 50)
Calculated weight of Structural Steel Repair = 112,900 lbs (Grade 50)
310 lbs (Grade 36)

All new structural steel shall be AASHTO M270 Grade 50, unless noted otherwise.

All new structural steel for bearing assemblies shall be hot-dip galvanized. See Special Provisions for "Hot Dip Galvanizing for Structural Steel."

No field welding is permitted except as specified in the contract documents.

Reinforcement bars designated (E) shall be epoxy coated.

Prior to pouring the new concrete deck, all heavy or loose rust, loose mill scale, and other loose detrimental foreign material shall be removed from the surfaces in contact with concrete (SSPC-SP3 standards). Tightly adhered paint may remain unless otherwise noted. Removal shall be accomplished by methods that will not damage the steel and the cost will be paid for according to Article 109.04 of the Standard Specifications.

As directed by the Engineer, existing construction accessories welded to the top flange of beams and girders shall be removed. The weld areas shall be ground flush and inspected for cracks using magnetic particle testing (MT) or dye penetrant testing (PT) by qualified personnel approved by the Engineer. Any cracks that cannot be removed by grinding 1/4 in. deep shall be identified and reported to the Bureau of Bridges & Structures for further disposition. The cost of removing welded accessories, grinding and inspecting weld areas and grinding cracks will be paid for according to Article 109.04 of the Standard Specifications.

If the Contractor elects to use cantilever forming brackets on the exterior beams or girders in Spans 4 thru 11 or 15 thru 23, the brackets shall be placed at the same locations as required for the hardwood blocks in Article 503.06(b) of the Standard Specifications. If additional cantilever forming brackets are required, hardwood blocking shall be wedged between the exterior and first interior beam at each of these additional bracket locations.

Bearing seat surfaces shall be constructed or adjusted to the designated elevations within a tolerance of 1/8 in. (0.01 ft.). Adjustment shall be made either by grinding the surface or by shimming the bearings.

A film forming Concrete Sealer shall be applied to horizontal surfaces of the designated areas of the new concrete pedestals at bearing replacements. A penetrating Concrete Sealer shall be applied to the vertical surfaces of the designated area of the new concrete pedestals at bearing replacement.

The Contractor shall obtain a construction permit from the Illinois Department of Natural Resources (IDNR), Office of Water Resources for any temporary construction activity placed in the water except cofferdams. This shall include the placement of material for run-arounds, causeways, etc. Any permit application by the Contractor shall refer to the IDNR 3704 Floodway Construction permit number allowing permanent construction as shown in the contract plans.

Plan dimensions and details relative to the existing structure have been taken from existing design plans and are subject to nominal construction variations. The Contractor shall field verify existing dimensions and details affecting new construction and make necessary approved adjustments prior to construction or ordering of materials. Such variations shall not be cause for additional compensation for a change in scope of the work, however, the Contractor will be paid for the quantity actually furnished at the unit price bid for the work.

The Contractor shall field verify all proposed plate and angle dimensions and spacing of holes prior to ordering steel.

Gaps between the existing steel and the new steel angles and/or cover plates, as well as abandoned holes to be covered by new steel plates and/or angles, shall be sealed with an approved polyurethane sealant. The sealant shall be compatible with the proposed paint system and shall be submitted to the Engineer for approval prior to use. All costs associated with the installation of the sealant shall be included with the cost for Structural Steel Repair.

Existing fixed steel bearing grease zerks shall be unclogged and greased using a molybdenum grease. The grease shall be submitted to the Engineer for approval prior to use. The cost of all work required to unclog and grease the grease zerks of the fixed bearings will not be measured separately for payment but shall be considered as incidental to the project.

If the analysis submitted by the Contractor for the jacking system to be used shows temporary stiffeners are required to prevent web crippling or buckling, the stiffeners shall be steel and bolted to the web. If stiffeners are not required, hardwood timbers shall be installed tightly between the top and bottom flange to prevent flange rotation.

Existing downspout supports shall be removed with the existing scuppers and/or floor drains as part of the concrete deck removal. Open holes in the steel members at the locations of the removed supports will be filled with new H.S. bolts matching the diameter of the previous fastener. The cost to furnish and install fasteners in open holes at removed downspout supports will be included with Removal of Existing Concrete Deck No. 2.

In Spans 6 through 23, the existing structural steel coating contains lead. The Contractor shall take appropriate precautions to address the presence of lead on this project.

The Organic Zinc Rich Primer / Epoxy / Urethane paint system shall be used for painting of new structural steel except where otherwise noted. The entire system shall be shop applied, with the exception that the exterior surfaces, masked off connection surfaces, and field installed fasteners, shall all be touched up and finish coated in the field. The color of the final finish coat for all interior steel surfaces below the deck shall be Gray, Munsell No. 5B 7/1. The color of the final finish coat for the truss superstructure members and the exterior and bottom flange of the fascia beams shall be Blue, Munsell No. 10B 3/6.

Cleaning and painting of the existing structural steel shall be as specified in the special provision for "Cleaning and Painting Existing Steel Structures". Steel members shall be cleaned per Near White Blast Cleaning, SSPC-SP10. Interior surfaces of box-shaped truss members will also be cleaned accordingly.

The designated areas cleaned per Near White Blast Cleaning and per Commercial Grade Power Tool Cleaning shall be painted according to the requirements of the Organic Zinc Rich Primer / Epoxy / Urethane paint system. The color of the final finish coat for all interior steel surfaces below the deck shall be Gray, Munsell No. 5B 7/1. The color of the final finish coat for the truss superstructure members, including the interior surfaces of box-shaped members, and the exterior and bottom flange of the fascia beams shall be Blue, Munsell No. 10B 3/6.

Cleaning and painting of existing structural steel in the areas of structural repairs or new structural installations shall be as specified in the special provision for Cleaning and Painting Contact Surface Areas of Existing Steel Structures.

The Contractor shall submit calculations and details demonstrating the structural integrity of the bridge is maintained under the additional imposed loads of the containment system. See special provisions.

A minimum of 4 air monitors will be required to monitor abrasive blasting operations at this site. See special provision for "Containment and Disposal of Lead Paint Cleaning Residues."

In Spans 3 through 5, containment of the non-lead cleaning residue is required to control nuisance dust. See special provisions.

SSPC QP1 and QP2 Contractor Certification is required for this Contract.

Existing caulking within the limits for cleaning and painting shall be removed, and new joint sealant shall be installed. Also, within the limits for cleaning and painting, joint sealant shall be installed around existing connection plates and at areas of pack rust between built-up plate members. The sealant shall be an approved polyurethane sealant, compatible with the proposed paint system, and shall be submitted to the Engineer for approval prior to use. All costs associated with the installation of sealant within the limits of cleaning and painting (excluding work required to install sealant around steel repairs within these limits) shall be included in the cost of Cleaning and Painting Steel Bridge No. 2.

The Contractor shall sequence construction in order to complete work in accordance with the required completion date. See the Special Provision for working restrictions.

The Contractor is required to provide Structural Assessment Reports for the proposed work. See Special Provision.

The Contractor shall retain the services of an engineering firm, prequalified in the IDOT consultant selection category of Structures-Major River Bridges, for preparation of the Structural Assessment Reports. Contractor's pre-approval shall not be applicable for this project. See Special Provision.

Current Ratings on File for Existing Structure
Inventory: HS 16.8
Operating: HS 29.0
Live Load Restrictions: None

Inventory and Operating Ratings and Live Load Restrictions are provided for information only. Inventory and Operating Ratings are based on HS loading and configuration. Live Load Restrictions are based on Illinois legal loads and configurations. The Ratings and Live Load Restrictions are not necessarily representative of capacities to support the Contractor's equipment.

The Contractor is advised that the existing structure contains members that are in a deteriorated condition with reduced load carrying capacity. It is the Contractor's responsibility to account for the condition of the existing structure when developing construction procedures for the complete or partial removal, or replacement of the structure. An Existing Structure Information Package is available upon request as noted in the special provisions.

STATION 222+85.77
RE-BUILT 20__ BY
STATE OF ILLINOIS
F.A.P. RTE. 317 SEC. (15B-1)BP, BRR
LOADING HS20-44
STRUCTURE NO. 090-0115

NAME PLATE

See Std. 515001

Existing Name Plate shall be cleaned and relocated next to new Name Plate. Cost included with Name Plate.

CURVE DATA
℄ WB US 150

P.I. Sta. = 718+06.77
Δ = 4° 26' 20" (RT)
D = 0° 52' 53"
R = 6,500.00'
T = 251.91'
L = 503.57'
E = 4.88'
P.C. Sta. = 715+54.86
P.T. Sta. = 720+58.43

CURVE DATA
℄ Ramp D

P.I. Sta. = 12+29.48
Δ = 2° 31' 03" (LT)
D = 0° 52' 55"
R = 6,496.00'
T = 142.74'
L = 285.43'
E = 1.57'
P.C. Sta. = 10+86.74
P.T. Sta. = 13+72.17

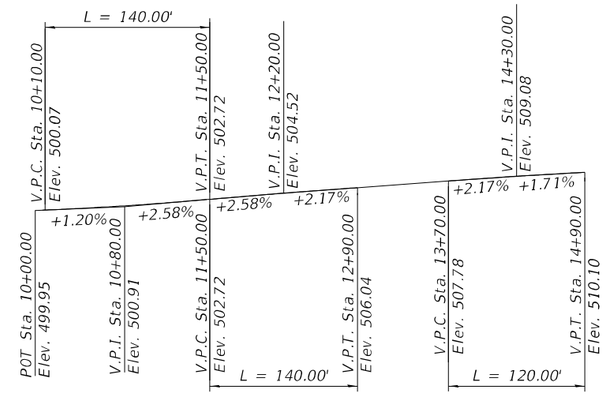

PROFILE GRADE
℄ Ramp D

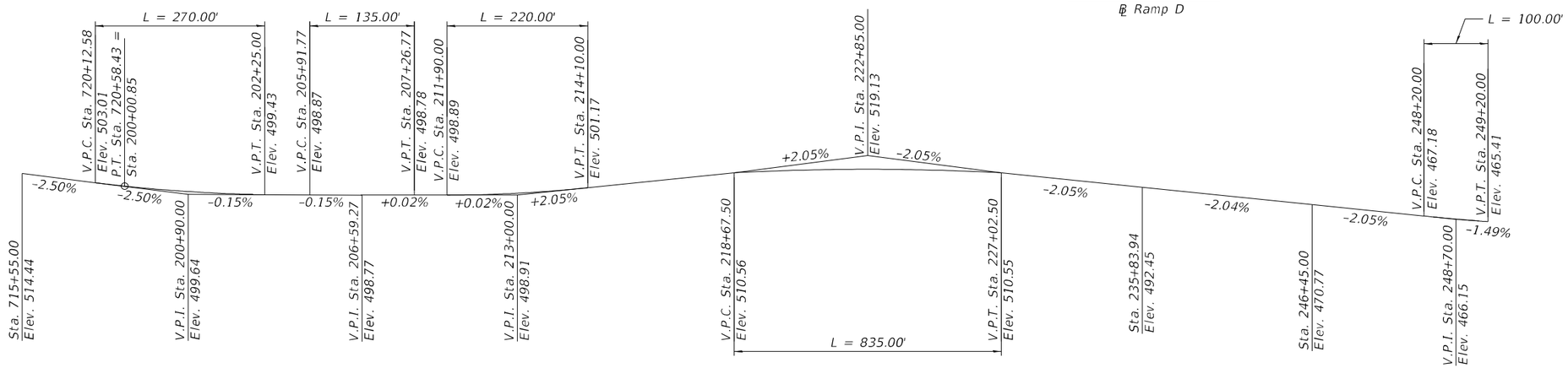

PROFILE GRADE
℄ WB US 150

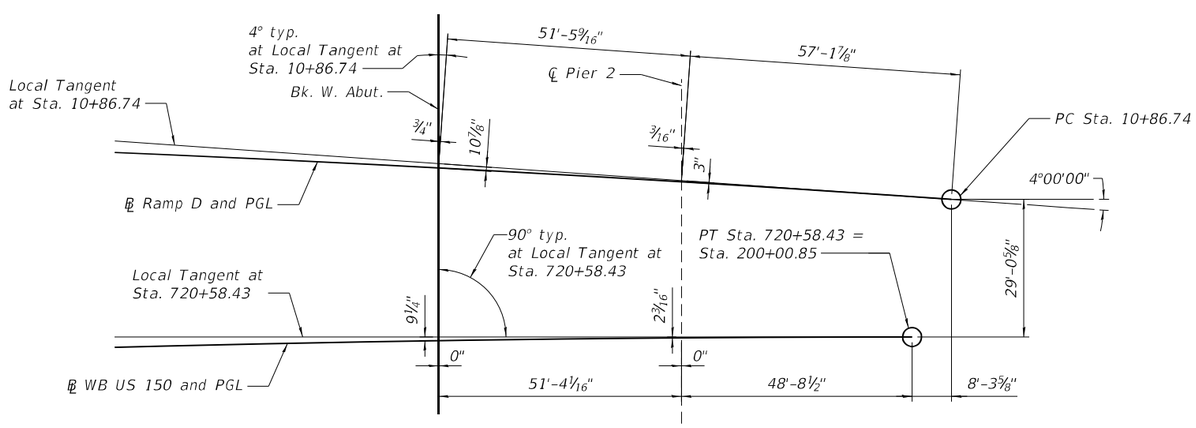

OFFSET SKETCH

Note:
Up to 1/4" to be ground off the bridge deck and the bridge approach slabs. The Profile Grades show the final grade after grinding.

MODEL: Default
FILE NAME: P:\4312-VBMcCLugageRehab\CADD\Structural_SN 090-0115_WBMainBridge_Final Plans\0900115-68E44-004-OffSetSketchProfiles.dgn
3/13/2025 12:37:20 PM

MODJESKI and MASTERS

USER NAME =	DESIGNED - YSS	REVISED -	
	CHECKED - RLM	REVISED -	
PLOT SCALE =	DRAWN - AEC	REVISED -	
PLOT DATE =	CHECKED - YSS	REVISED -	

STATE OF ILLINOIS
DEPARTMENT OF TRANSPORTATION

OFFSET SKETCH AND PROFILES
STRUCTURE NO. 090-0115

SHEET S4 OF S214 SHEETS

F.A.P. RTE.	SECTION	COUNTY	TOTAL SHEETS	SHEET NO.
317	(15B-1)BP,BRR	PEO/TAZ	418	174
		CONTRACT NO. 68E44		
	ILLINOIS	FED. AID PROJECT		

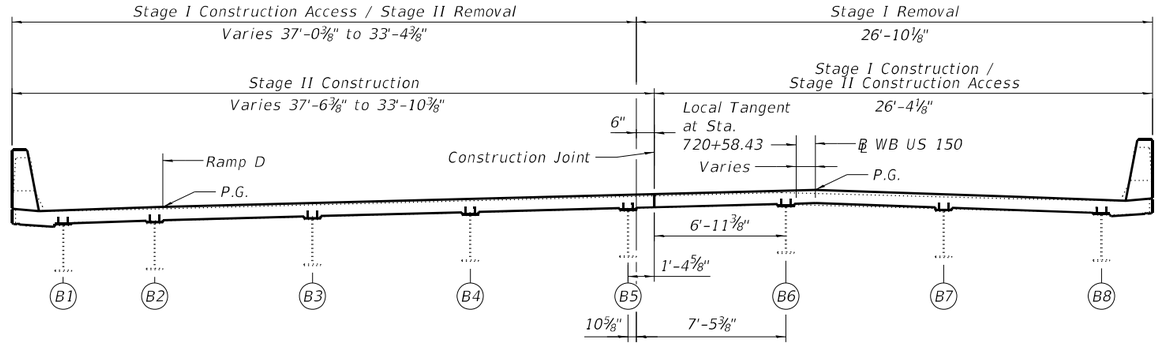

STAGE CONSTRUCTION DETAILS - SPAN 3

Looking East
Dimesions are at end of deck perpendicular to Baseline

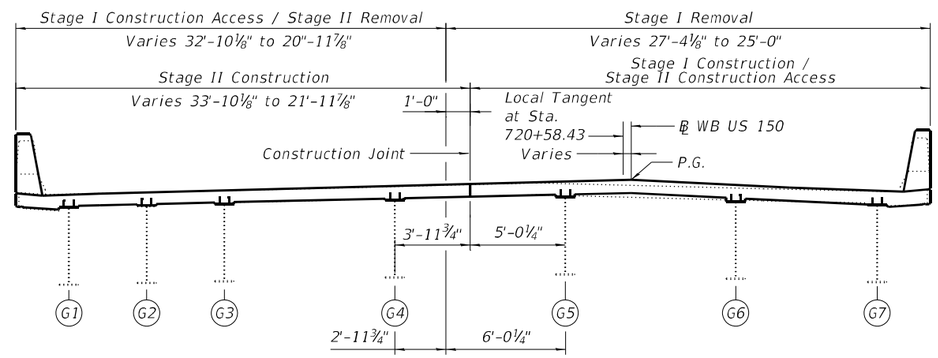

STAGE CONSTRUCTION DETAILS - SPANS 4 AND 5

Looking East
Dimesions are at end of deck perpendicular to Baseline

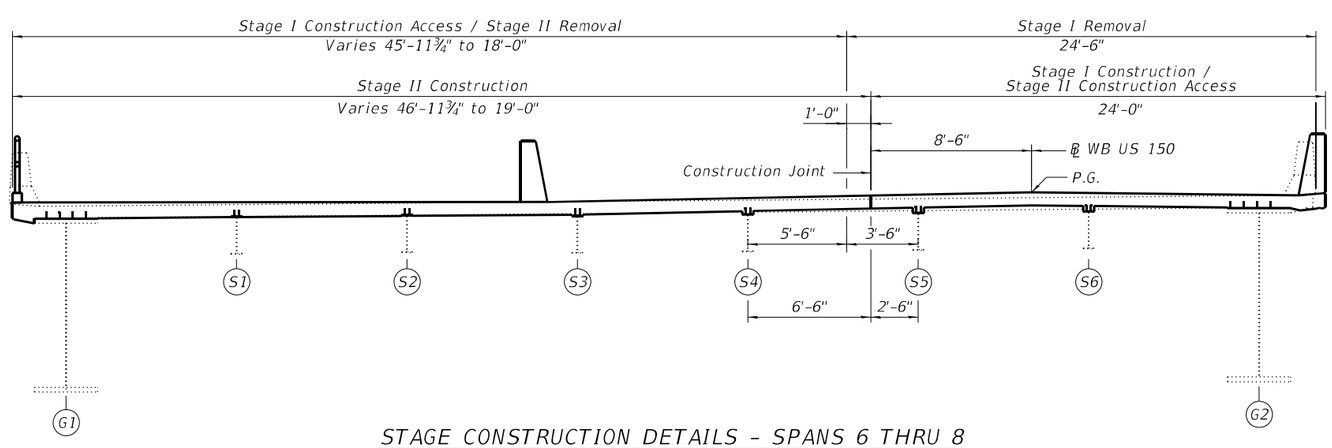

STAGE CONSTRUCTION DETAILS - SPANS 6 THRU 8

Looking East
Dimesions are at end of deck perpendicular to Baseline

MODEL: Default
FILE NAME: P:\4312-WBMcCLugageRehab\CADD\Structural_SN 090-0115_WBMainBridge_Final Plans\0900115-68E44-005-StgConst-1.dgn

3/13/2025 12:37:23 PM

MODJESKI and MASTERS

USER NAME =	DESIGNED - RLM	REVISED -	
	CHECKED - YSS	REVISED -	
PLOT SCALE =	DRAWN - ELK	REVISED -	
PLOT DATE =	CHECKED - RLM	REVISED -	

STATE OF ILLINOIS
DEPARTMENT OF TRANSPORTATION

STAGE CONSTRUCTION DETAILS - 1
STRUCTURE NO. 090-0115

SHEET S5 OF S214 SHEETS

F.A.P. RTE.	SECTION	COUNTY	TOTAL SHEETS	SHEET NO.
317	(15B-1)BP,BRR	PEO/TAZ	418	175
		CONTRACT NO. 68E44		
	ILLINOIS	FED. AID PROJECT		

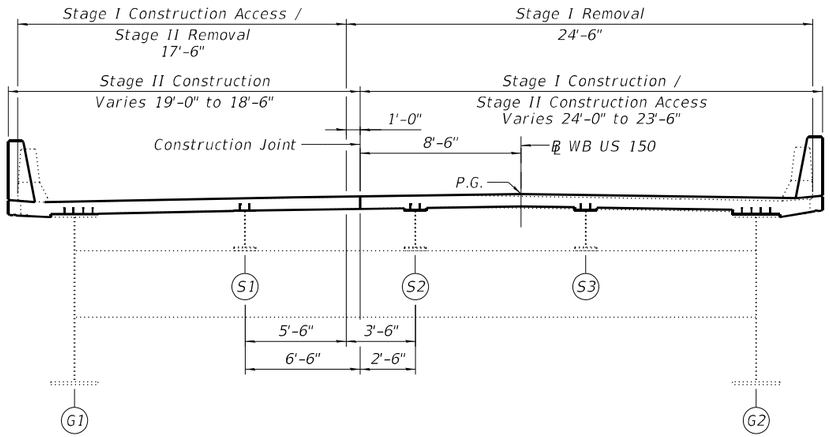

STAGE CONSTRUCTION DETAILS - SPANS 9 THRU 11

Looking East

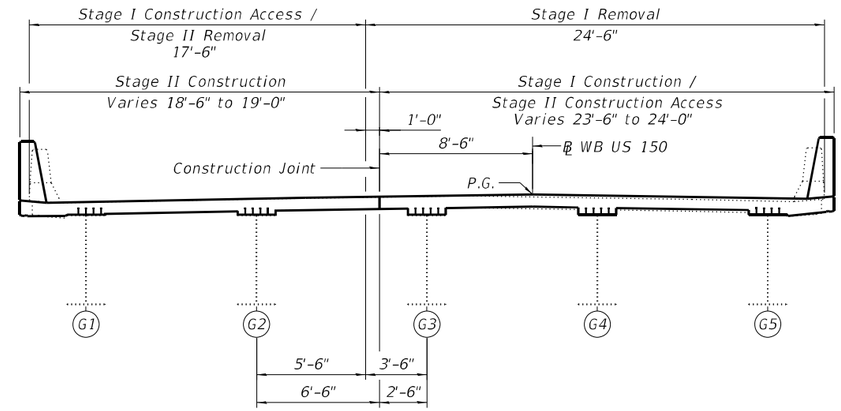

STAGE CONSTRUCTION DETAILS - SPANS 15 THRU 23

Looking East

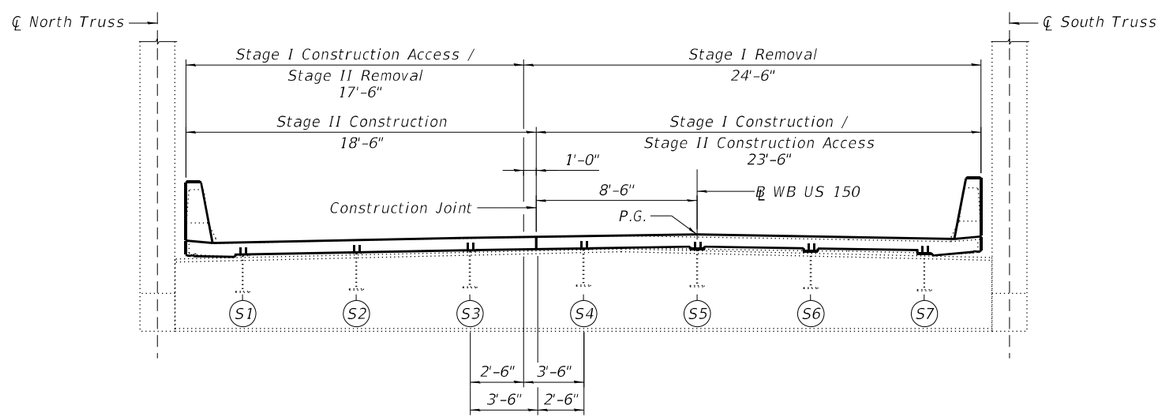

STAGE CONSTRUCTION DETAILS - SPANS 12 THRU 14

Looking East

MODEL: Default
FILE NAME: P:\4312-VBM\CLugageRehab\CADD\Structural_SN 090-0115_WBMainBridge_Final Plans\0900115-68E44-006-StgConst-2.dgn

MODJESKI and MASTERS	USER NAME =	DESIGNED - RLM	REVISED -	STATE OF ILLINOIS DEPARTMENT OF TRANSPORTATION	STAGE CONSTRUCTION DETAILS - 2 STRUCTURE NO. 090-0115
		CHECKED - YSS	REVISED -		
	PLOT SCALE =	DRAWN - ELK	REVISED -		
	PLOT DATE =	CHECKED - RLM	REVISED -		SHEET S6 OF S214 SHEETS

F.A.P. RTE.	SECTION	COUNTY	TOTAL SHEETS	SHEET NO.
317	(15B-1)BP,BRR	PEO/TAZ	418	176
		CONTRACT NO. 68E44		
	ILLINOIS	FED. AID PROJECT		

3/13/2025 12:37:25 PM

Repair I.D. No.	04/25/2024 NBIS Inspection Deficiency Item No.	Location	Sheet No. of S214
2	129	Girder 1 Bearing at Pier 4, Span 6	S182
2	98	Girder 2 Bearing at Pier 4, Span 6	S182
2	99	Girder 1 Bearing at Pier 6	S183
2	100	Girder 2 Bearing at Pier 6	S183
2	113	Girder 1 Bearing at Pier 7, Span 8	S184
2	114	Girder 2 Bearing at Pier 7, Span 8	S184
2	61	Girder 1 Bearing at Pier 8	S185
2	186	Girder 1 Bearing at Pier 10, Span 11	S186
2	187	Girder 2 Bearing at Pier 10, Span 11	S186
2	41	Girder 1 Bearing at Pier 13, Span 15	S187
2	89	Girder 1 Bearing at Pier 17	S188
2	47	Girder 2 Bearing at East Abutment	S190
3	49	Pier 2	S201
3	53	Pier 4	S201
3	22	Pier 7	S202
3	26	Pier 8	S202
3	63	Pier 9	S203
3	28	Pier 10	S203
3	76	Pier 12	S204
3	82	Pier 13	S204
3	85	Pier 15	S205
3	10	Pier 16	S205
3	88	Pier 17	S205
3	92	Pier 19	S206
4	173	Sign Structure near Pier 6	Rdwy. Plans
4	175	Sign Structure near Pier 9	Rdwy. Plans
5*	55	Span 7, Floorbeam 10 beneath Stringer 5	S181
6	115	Span 8, Girder 2 at Pier 7	S144
6	184	Span 15, Girder 1 at Pier 13	S179
6	211	Span 21, Girder 1 at Pier 19	S179
7	20	Span 6, Middle of Lateral Bracing in Panels 3, 4, 5, 6 and 7	S146
10	131	Span 9, Cross Frame at Pier 7 under Floorbeam 0	S147
11	131	Span 9, Cross Frame at Pier 7 under Floorbeam 0	S147
12	116	Span 9, Floorbeam 0	S148
12	165	Span 13, Floorbeam 21	S161
12	121	Span 13, Floorbeam 29	S162
12	159	Span 14, Floorbeam 42	S163
12	160	Span 14, Floorbeam 46	S164
12	162	Span 14, Floorbeam 50	S164
13	133	Span 12, L1S, Inside Gusset Plate	S156
14	71	Pier 11	S204
15	188	Span 13, L21N, Guide Pin	S153
15	189	Span 13, L21S, Guide Pin	S153
16	119	Span 13, L25N, Access Platform for Navigation Light	S154
18	106	Pier 10, Closed Drainage System, North Side	S114
19	4	Span 13, L26N-L27N at L26N	S181
20	117	Span 12, Stringer 7 at Floorbeam 4, Panel 5	S166
20	134	Span 12, Stringer 1 at Floorbeam 8, Panel 9	S166
20	135	Span 12, Stringer 2 at Floorbeam 8, Panel 9	S166
20	163	Span 12, Stringer 3 at Floorbeam 8, Panel 9	S166
20	136	Span 12, Stringer 4 at Floorbeam 8, Panel 9	S166
20	137	Span 12, Stringer 5 at Floorbeam 8, Panel 9	S166
20	138	Span 12, Stringer 6 at Floorbeam 8, Panel 9	S166
20	34	Span 12, Stringer 7 at Floorbeam 11, Panel 11	S167
20	177	Span 12, Stringer 1 at Floorbeam 12, Panel 13	S166
20	118	Span 12, Stringer 7 at Floorbeam 12, Panel 13	S166
20	143	Span 13, Stringer 1 at Floorbeam 25, Panel 26	S166
20	144	Span 13, Stringer 2 at Floorbeam 25, Panel 26	S166
20	145	Span 13, Stringer 3 at Floorbeam 25, Panel 26	S166
20	146	Span 13, Stringer 4 at Floorbeam 25, Panel 26	S166
20	147	Span 13, Stringer 5 at Floorbeam 25, Panel 26	S166
20	148	Span 13, Stringer 6 at Floorbeam 25, Panel 26	S166
20	149	Span 13, Stringer 7 at Floorbeam 25, Panel 26	S166
20	150	Span 13, Stringer 1 at Floorbeam 29, Panel 29	S166
20	151	Span 13, Stringer 2 at Floorbeam 29, Panel 29	S166
20	152	Span 13, Stringer 3 at Floorbeam 29, Panel 29	S166
20	153	Span 13, Stringer 4 at Floorbeam 29, Panel 29	S166
20	154	Span 13, Stringer 5 at Floorbeam 29, Panel 29	S166
20	155	Span 13, Stringer 6 at Floorbeam 29, Panel 29	S166
20	156	Span 13, Stringer 7 at Floorbeam 29, Panel 29	S166
20	125	Span 14, Stringer 7 at Floorbeam 50, Panel 51	S167

Repair I.D. No.	04/25/2024 NBIS Inspection Deficiency Item No.	Location	Sheet No. of S214
21	164	Span 12, Floorbeam 12	S165
21	165	Span 13, Floorbeam 21	S161
21	121	Span 13, Floorbeam 29	S162
21	159	Span 14, Floorbeam 42	S163
23	32	Span 12, Lateral Bracing, L9S to Midpoint Floorbeam 10	S169
23	166	Span 13, Lateral Bracing, L26S to Midpoint Floorbeam 27	S169
23	167	Span 13, Lateral Bracing, Midpoint Floorbeam 27 to L28S	S169
23	195	Span 13, Lateral Bracing, Midpoint Floorbeam 28 to L29N	S169
23	179	Span 13, Lateral Bracing, L29S to Midpoint Floorbeam 28	S169
23	157	Span 13, Lateral Bracing, L33S to Midpoint Floorbeam 32	S170
24	197	Span 15, 2nd Cross Frame from Pier 14 between Girders 3 and 4	S181
24	201	Span 21, 2nd Cross Frame from Pier 20 between Girders 4 and 5	S181
24	212	Span 21, 4th Cross Frame from Pier 20 between Girders 2 and 3	S181
25	65	Span 12, Lateral Bracing Connection Plate at L4N	S171
25	66	Span 12, Lateral Bracing Connection Plate at L4S	S171
25	30	Span 12, Lateral Bracing Connection Plate at L7N	S172
25	67	Span 12, Lateral Bracing Connection Plate at L9S	S172
25	68	Span 12, Lateral Bracing Connection Plate at L12N	S173
25	69	Span 12, Lateral Bracing Connection Plate at L12S	S173
25	72	Span 13, Lateral Bracing Connection Plate at L18N	S174
25	140	Span 13, Lateral Bracing Connection Plate at Midpoint Floorbeam 18	S174
25	142	Span 13, Lateral Bracing Connection Plate at L25N	S175
25	179	Span 13, Lateral Bracing Connection Plate at L29S	S175
25	158	Span 13, Lateral Bracing Connection Plate at Midpoint Floorbeam 38	S176
25	79	Span 14, Lateral Bracing Connection Plate at L42N	S173
25	80	Span 14, Lateral Bracing Connection Plate at L42S	S173
25	124	Span 14, Lateral Bracing Connection Plate at L46N	S171
25	161	Span 14, Lateral Bracing Connection Plate at L46S	S171
25	209	Span 14, Lateral Bracing Connection Plate at L50N	S171
26	181	Span 14, Sway Brace Connection at L47S-U47S	S181
27	77	Pier 12, North Truss Bearing	S177
27	78	Pier 12, South Truss Bearing	S177
28	190	Span 13, L33N, Truss Pin	S177
29	15	Span 14, Stringer 1 at Mid-panel, Panel 46	S168
30	23	East Abutment Backwall	S206
31	171	Pier 4, Junction Box at North Parapet	Elec. Plans
31	54	Span 6, Conduit along Girder 1 near Floorbeam 6, Panel 7	Elec. Plans
31	58	Span 8, Conduit along Girder 1 between Floorbeams 7 and 9	Elec. Plans
31	203	Conduit along Girder 1 at Pier 7	Elec. Plans
31	204	Conduit along Girder 2 at Pier 7	Elec. Plans
31	174	Pier 9, Junction Box at North Parapet	Elec. Plans
31	176	Span 11, Conduit along Girder 1 at Floorbeam 1	Elec. Plans
31	206	Pier 10, Conduit at South Bearing	Elec. Plans
31	207	Pier 11, North Truss Navigation Light	Elec. Plans
31	178	Span 13, Conduit at L20N	Elec. Plans
31	75	Span 13, Junction Box at North Parapet between L37 and L38	Elec. Plans
31	168	Span 14, Junction Box at North Parapet between L42 and L43	Elec. Plans
31	185	Span 17, Conduit along Girder 1, 10' West of Pier 16	Elec. Plans
31	87	Span 18, Conduit along Girder 1, 10' East of Pier 16	Elec. Plans
31	91	Span 20, Conduit along Girder 1, 5' East of Pier 18	Elec. Plans
31	213	Span 22, Conduit along Girder 1 at Midspan	Elec. Plans
31	45	Span 23, Conduit between Girders 4 and 5, between 4th and 5th Cross Frames from Pier 21	Elec. Plans
31	95	Span 23, Conduit along Girder 1, 5' from East Abutment	Elec. Plans
31	202	Span 23, Conduit along Girder 5 at East Abutment	Elec. Plans
31	96	Span 23, Conduit at East Abutment between Girders 3 and 4	Elec. Plans
31	128	Span 23, Conduit at East Abutment, South Corner	Elec. Plans

Notes:
See Sheets S9 thru S19 for repair identification numbers.

* Span 7 stringer numbering is based on the existing plans. Stringer 5 in the existing plans is equivalent to Stringer 4 in the NBIS Inspection Reports.

MODEL: Default
FILE NAME: P:\4312-WBMcCluggageRehab\CADD\Structural_SN 090-0115_WBMainBridge_Final Plans\0900115-68E44-007-NBIS1.dgn

MODJESKI and MASTERS

USER NAME =	DESIGNED - RLM	REVISED -	
	CHECKED - CSG	REVISED -	
PLOT SCALE =	DRAWN - AEC	REVISED -	
PLOT DATE =	CHECKED - RLM	REVISED -	

STATE OF ILLINOIS
DEPARTMENT OF TRANSPORTATION

2024 NBIS REFERENCE TABLES - 1
STRUCTURE NO. 090-0115

SHEET S7 OF S214 SHEETS

F.A.P. RTE.	SECTION	COUNTY	TOTAL SHEETS	SHEET NO.
317	(15B-1)BP,BRR	PEO/TAZ	418	177

CONTRACT NO. 68E44
ILLINOIS FED. AID PROJECT

3/13/2025 12:37:28 PM

Repair I.D.	04/25/2024 NBIS Inspection Deficiency Item No.	Location	Sheet No. of S214
Structure Painting	1	All Spans, Structural Steel Throughout	
Structure Painting	123	Span 13, Strut at Floorbeam 33	
Bridge Deck	2	All Spans, Bridge Deck, Throughout	
Bridge Deck	3	All Spans, Deck Drains, Throughout	
Bridge Deck	97	All Spans, Parapets, Throughout	
Bridge Deck	52	Span 6, Drain Pipe Hanger at Pier 4	
Bridge Deck	107	Span 12, Drain Pipe, South Side of Panel 10	
Expansion Joints	108	Span 13, Finger Plate Trough at L21	S124
Expansion Joints	183	Pier 13, Finger Plate, Sliding Plate at North Parapet	S127
FB Flange to Web Welds	165	Span 13, Floorbeam 21 at North and South Ends	S158
FB Flange to Web Welds	180	Span 13, Floorbeam 34 at South End	S158
FB Flange to Web Welds	191	Span 14, Floorbeam 52 at South End	S158
FB Flange to Web Welds	182	Span 14, Floorbeam 54 at South End	S157
Lower Chords	170	Spans 12 and 14, Lower Chords, L0 to L10 and L44 to L54	S152
Misc. Fastener Repairs	50	Span 4, Girder 3, at Field Splice	S180
Misc. Fastener Repairs	51	Span 5, Girder 5, at Field Splice	S180
Misc. Fastener Repairs	172	Span 7, Girder 1, 1st Splice East of Pier 5	S180
Misc. Fastener Repairs	130	Span 7, Lateral Bracing at Girder 1, Floorbeam 5	S180
Misc. Fastener Repairs	192	Span 8, Girder 1 between Floorbeams 2 and 3	S180
Misc. Fastener Repairs	59	Span 9, Lateral Bracing at Midpoint Floorbeam 2	S180
Misc. Fastener Repairs	60	Span 9, Floorbeam 9 at Girder 1	S180
Misc. Fastener Repairs	205	Span 11, Girder 1, 1st Splice East of Pier 5	S180
Misc. Fastener Repairs	132	Span 12, Top Lateral Bracing, U1S-U2N at U1S	S180
Misc. Fastener Repairs	101	Span 12, Top Lateral Bracing, U8N-U9S at U8N	S180
Misc. Fastener Repairs	193	Span 12, U16S, Inside Gusset Plate	S180
Misc. Fastener Repairs	194	Span 13, U17S, Outside Gusset Plate	S180
Misc. Fastener Repairs	102	Span 13, L22N-L23N, Web Splice at L23N	S180
Misc. Fastener Repairs	141	Span 13, Lower Lateral Bracing, L23N to Midpoint Floorbeam 24 at L23N	S180
Misc. Fastener Repairs	74	Span 13, U27N, Inside Gusset Plate	S180
Misc. Fastener Repairs	78	Pier 12, South Truss Bearing	S180
Misc. Fastener Repairs	40	Span 14, U39S, Inside Gusset Plate	S180
Misc. Fastener Repairs	81	Span 14, Stringer 7 at Floorbeam 46, Panel 46	S180
Misc. Fastener Repairs	160	Span 14, North End of Floorbeam 46	S180
Misc. Fastener Repairs	208	Span 14, U47S, Gusset Plate	S180
Misc. Fastener Repairs	210	Span 14, Stringer 1 at Floorbeam 50, Panel 50	S180
Misc. Fastener Repairs	198	Span 16, Lateral Bracing at Girder 5, 7th Connection from Pier 14	S180
Misc. Fastener Repairs	199	Span 16, Midspan of Girder 5, 4th drain from Pier 15	S180
Misc. Fastener Repairs	83	Span 16, Girder 2, at Field Splice	S180
Misc. Fastener Repairs	84	Span 16, Lateral Bracing at Girder 1, 1st Connection West of Pier 15	S180
Misc. Fastener Repairs	110	Span 17, Girder 1, 30' East of Pier 15	S180
Misc. Fastener Repairs	103	Span 17, Girder 5, 30' East of Pier 15	S180
Misc. Fastener Repairs	42	Span 17, Girder 5, at 10th, 15th, and 20th Stiffeners West of Pier 16	S180
Misc. Fastener Repairs	104	Span 18, Girder 1, 20' West of Pier 17	S180
Misc. Fastener Repairs	90	Span 19, Girder 1, at Web Field Splice, West End of Span	S180
Misc. Fastener Repairs	111	Span 19, Girder 5, 30' East of Pier 17 and 15' West of Pier 18	S180
Misc. Fastener Repairs	200	Span 19, Lateral Bracing at Girder 1, 9th Connection from Pier 17	S180
Misc. Fastener Repairs	43	Span 19, Girder 1, 30' West of Pier 18	S180
Misc. Fastener Repairs	105	Span 20, Lateral Bracing at Girder 4, 7th Connection from Pier 18	S180
Misc. Fastener Repairs	126	Span 20, Girder 3, 4th Cross Frame from Pier 18	S180
Misc. Fastener Repairs	127	Span 22, Girder 1, at 1st Drain East of Pier 20	S180

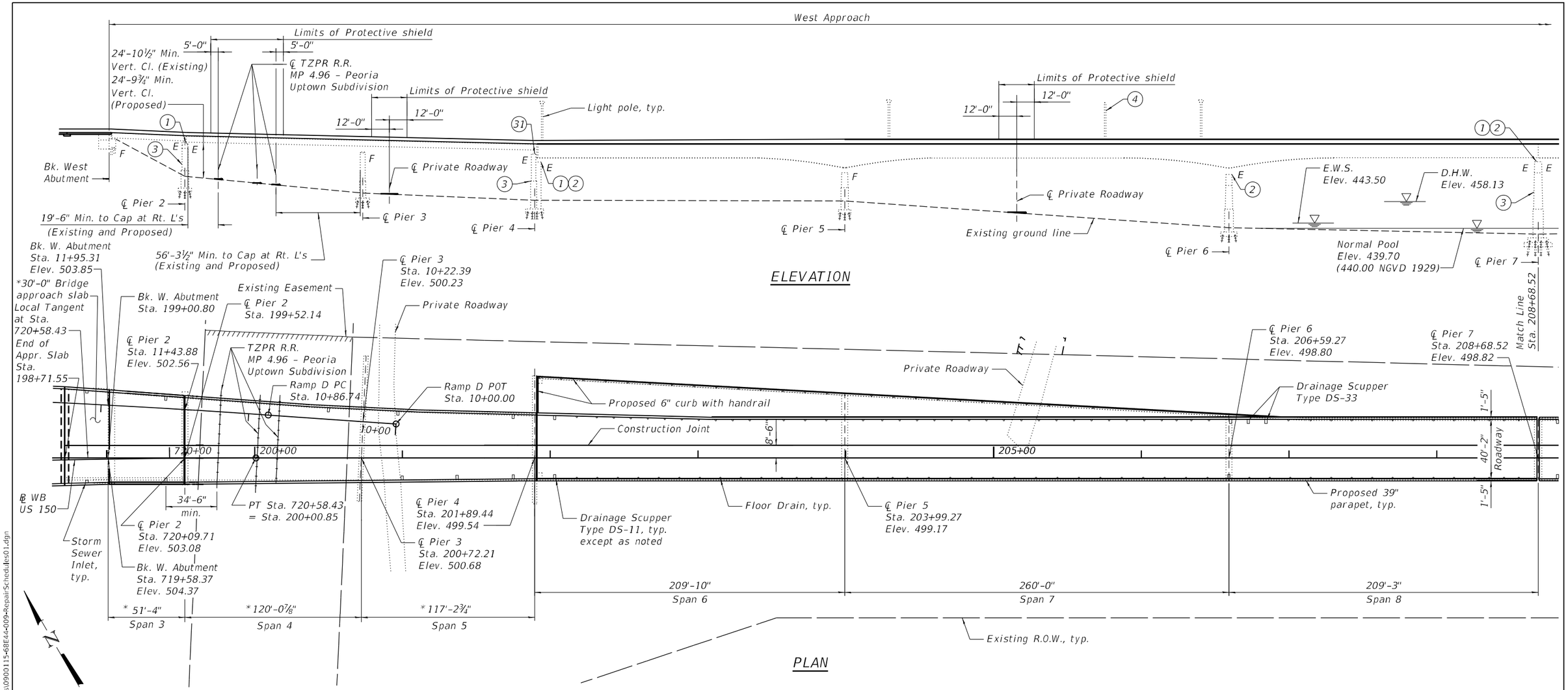

ELEVATION

PLAN

WEST APPROACH REPAIR SCHEDULE - 1			
ID. NO.	Item	Location (NBIS Item Number)	Action
-	Bridge Deck	West Abutment to East Abutment (2, 3, 52, 97)	Remove and replace bridge deck and parapets. Install shear studs in negative moment regions on existing beams in Spans 4 and 5 and along full length of existing girders and stringers in Spans 6 thru 8 as part of this work.
-	Bridge Approach Slab	West Bridge Approach Slab	Remove and replace bridge approach slabs and parapets
-	Expansion Joints	Expansion joints at Pier 2, Pier 4 and Pier 7	Replace expansion joints
-	Protective Coat	West Bridge Approach Slab to East Bridge Approach Slab	Apply protective coat to top of deck and parapets
-	Structure Painting	West Abutment to East Abutment (1)	Clean and paint entire superstructure and fixed bearings
-	Miscellaneous Fastener Repairs	Various members, Various locations (50, 51, 130, 172, 192)	Replace defective or missing fasteners; fill misdrilled holes with bolts
1	Concrete Sealer	Pier 2, Pier 4 and Pier 7	Apply concrete sealer to pier cap under expansion joints
2	Bearings	Expansion bearings at Pier 4 (East bearings only) (98, 129), Pier 6 (99, 100) and Pier 7 (113, 114)	Replace expansion bearings
3	Pier	Pier 2 (49), Pier 4 (53) and Pier 7 (22)	Structural Repair of Concrete and/or Epoxy Crack Sealing
4	Sign Structure	Near Pier 6 (173)	Remove existing sign structure; install new sign structure in Span 5
31	Electrical Components**	North Parapet at Pier 4 (171)	Repair junction box

* Dimensions measured along Baseline.

** See Electrical Plans for repair and/or replacement details.

Notes:
See Electrical Plans for lighting details.
See Roadway Plans for sign structure details.
Elevations shown on plan view are after grinding.

MODJESKI and MASTERS

USER NAME =	DESIGNED - YSS	REVISED -	
	CHECKED - RLM	REVISED -	
PLOT SCALE =	DRAWN - AEC	REVISED -	
PLOT DATE =	CHECKED - RLM	REVISED -	

STATE OF ILLINOIS
DEPARTMENT OF TRANSPORTATION

GENERAL PLAN AND ELEVATION REPAIR SCHEDULE - 1
STRUCTURE NO. 090-0115

SHEET S9 OF S214 SHEETS

F.A.P. RTE.	SECTION	COUNTY	TOTAL SHEETS	SHEET NO.
317	(15B-1)BP,BRR	PEO/TAZ	418	179

CONTRACT NO. 68E44

ILLINOIS FED. AID PROJECT

MODEL: Default
FILE NAME: P:\4312-VBM\CL\LugageRehab\CADD\Structural_SN 090-0115_WBMainBridge_Final Plans\0900115-68E44-009-RepairSchedules01.dgn

3/13/2025 12:37:38 PM

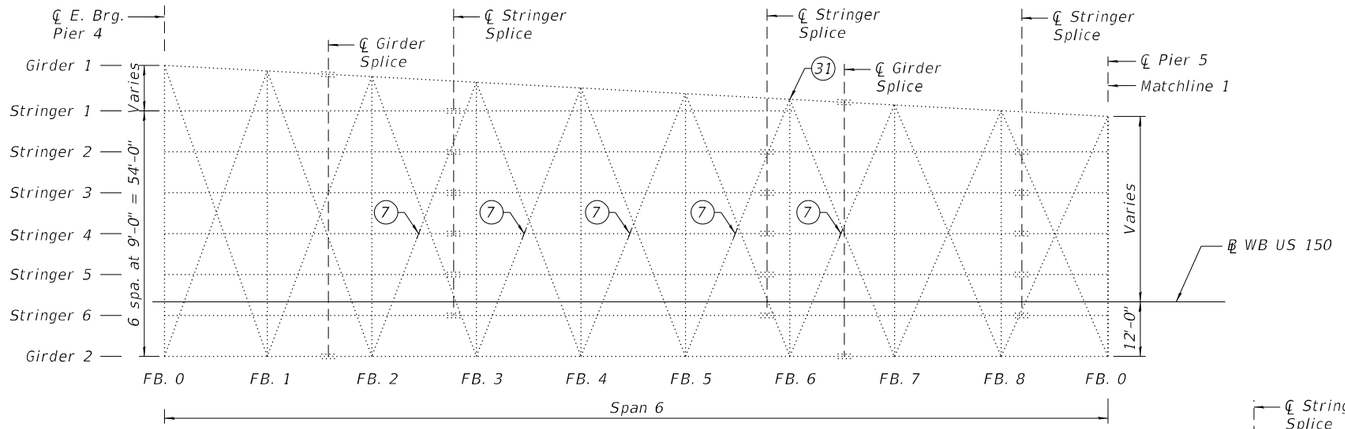

FRAMING PLAN - SPAN 6

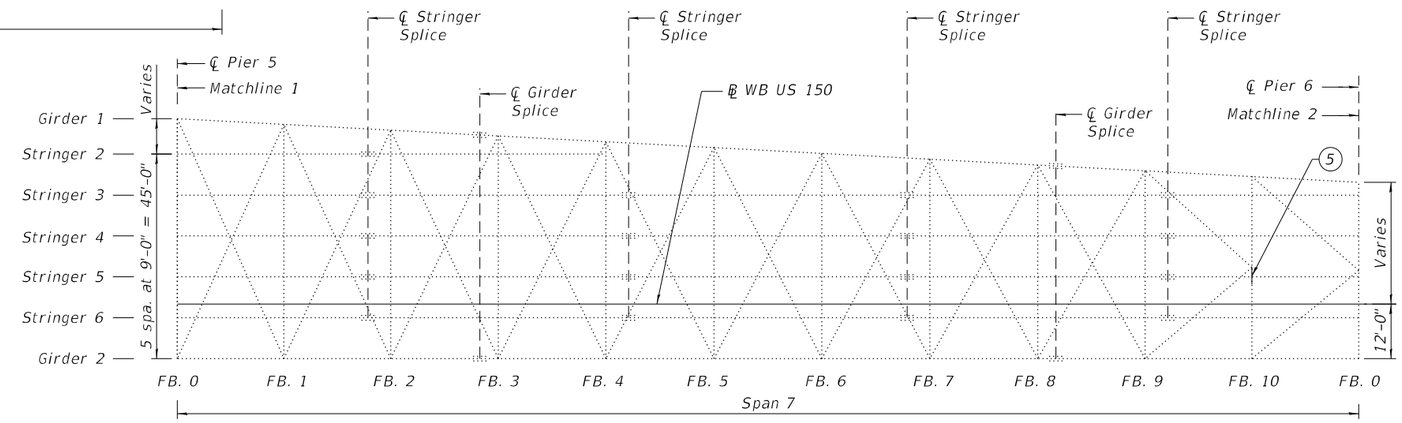

FRAMING PLAN - SPAN 7

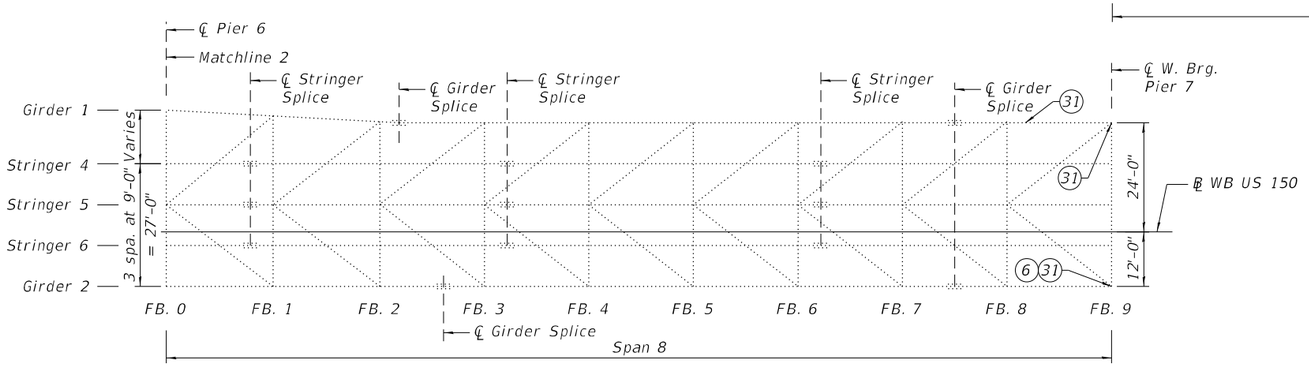

FRAMING PLAN - SPAN 8

* See Electrical Plans for repair and/or replacement details.

WEST APPROACH REPAIR SCHEDULE - 2

ID. NO.	Item	Location (NBIS Item Number)	Action
5	Floorbeam Stiffener	Span 7, Stiffener at FB. 10 beneath Stringer 5, Panel 11 (55)	Repair cracked weld
6	Girder Web	Span 8, Girder 2 at Pier 7 (115)	Install web repair plates and/or angles
7	Lateral Bracing	Span 6, Panels 3, 4, 5, 6 and 7 (20)	Replace broken or missing hanger rod
31	Electrical Components*	Span 6, Girder 1 at FB. 6, Panel 7 (54); Span 8, Girder 1 between FB. 7 and FB. 9 (58); Span 8, Girder 1 at Pier 7 (203); Span 8, Girder 2 at Pier 7 (204)	Repair broken conduit

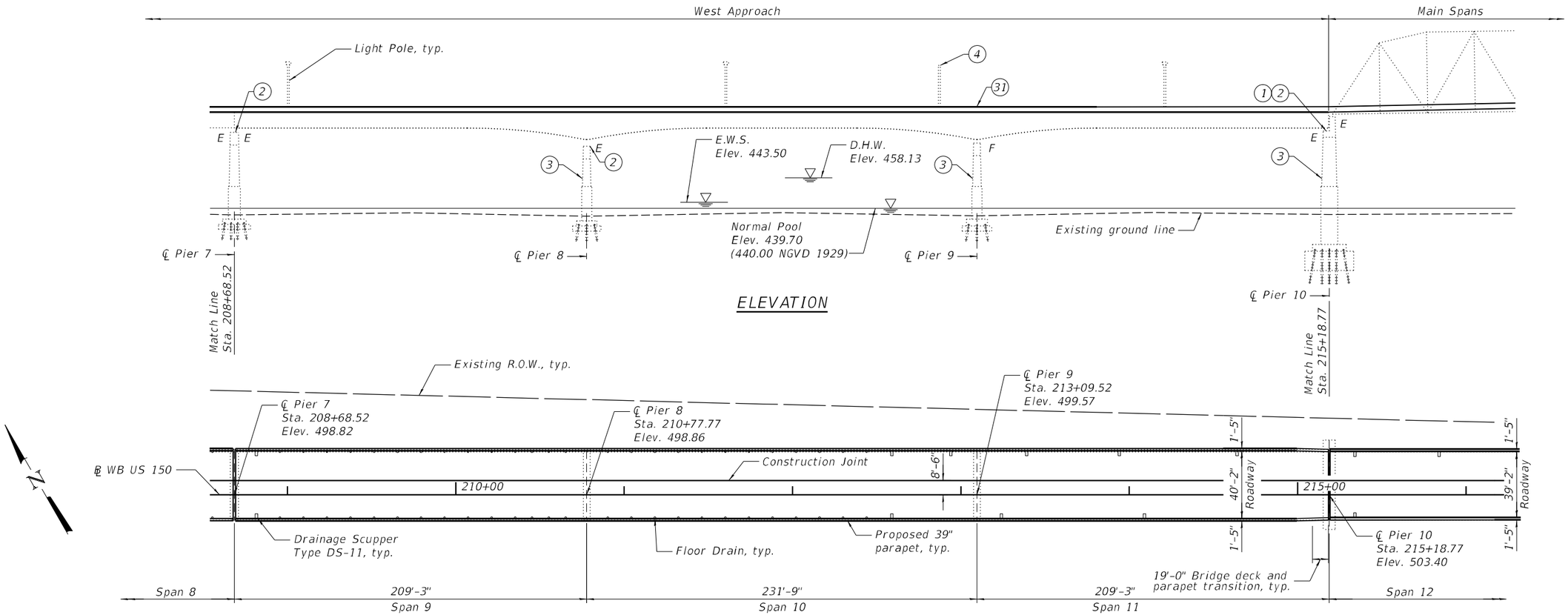

WEST APPROACH REPAIR SCHEDULE - 3			
ID. NO.	Item	Location (NBIS Item Number)	Action
-	Bridge Deck	West Abutment to East Abutment (2, 3, 97)	Remove and replace bridge deck and parapets. Install shear studs on existing girders and stringers in Spans 9 thru 11 as part of this work
-	Expansion Joints	Expansion joint at Pier 10 (106)	Replace expansion joints
-	Protective Coat	West Bridge Approach Slab to East Bridge Approach Slab	Apply protective coat to top of deck and parapets
-	Structure Painting	West Abutment to East Abutment (1)	Clean and paint structural steel of entire superstructure and fixed bearings
-	Miscellaneous Fastener Repairs	Various members, Various locations (59, 60 and 205)	Replace defective or missing fasteners; fill misdrilled holes with bolts
1	Concrete Sealer	Pier 10	Apply concrete sealer to pier cap under expansion joints
2	Bearings	Expansion bearings at Pier 7, Pier 8 (61) and Pier 10 (186, 187)	Replace expansion bearings
3	Pier	Piers 8 (26), 9 (63) and 10 (28)	Structural Repair of Concrete and/or Epoxy Crack Sealing
4	Sign Structure	Near Pier 9 (175)	Remove existing sign structure
31	Electrical Components*	North Parapet at Pier 9 (174)	Repair junction box

* See Electrical Plans for repair and/or replacement details.

Notes:
See Electrical Plans for lighting details.
Elevations shown on plan view are after grinding.

MODEL: Default
FILE NAME: P:\4312-WBM\CLiggageRehab\CADD\Structural_SN 090-0115_WBMainBridge_Final Plans\09001115-68E44-011-RepairSched.dgn
3/13/2025 12:37:45 PM

MODJESKI and MASTERS

USER NAME =	DESIGNED - YSS	REVISED -	
	CHECKED - RLM	REVISED -	
PLOT SCALE =	DRAWN - AEC	REVISED -	
PLOT DATE =	CHECKED - RLM	REVISED -	

STATE OF ILLINOIS
DEPARTMENT OF TRANSPORTATION

GENERAL PLAN AND ELEVATION REPAIR SCHEDULE - 3
STRUCTURE NO. 090-0115

SHEET S11 OF S214 SHEETS

F.A.P. RTE.	SECTION	COUNTY	TOTAL SHEETS	SHEET NO.
317	(15B-1)BP,BRR	PEO/TAZ	418	181
		CONTRACT NO. 68E44		
		ILLINOIS	FED. AID PROJECT	

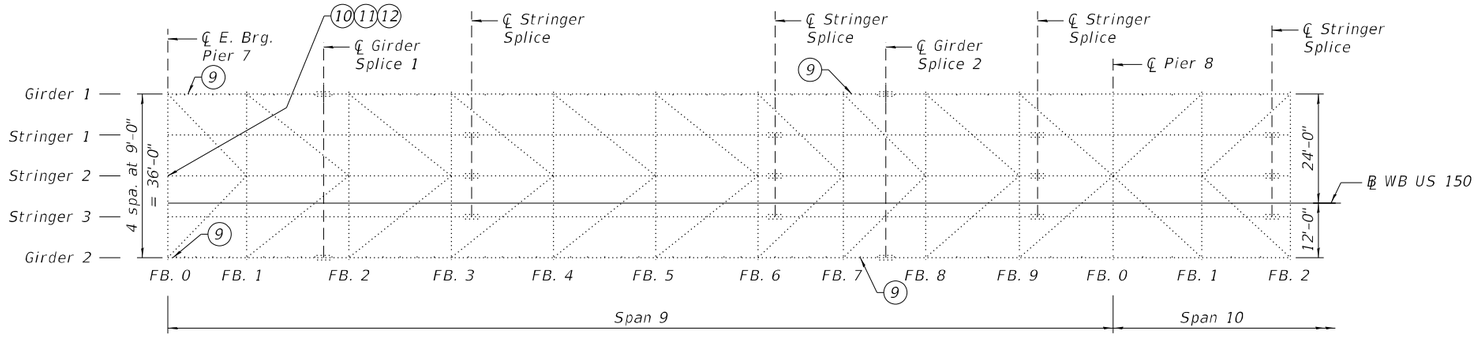

FRAMING PLAN - SPAN 9 AND SPAN 10 (PARTIAL)

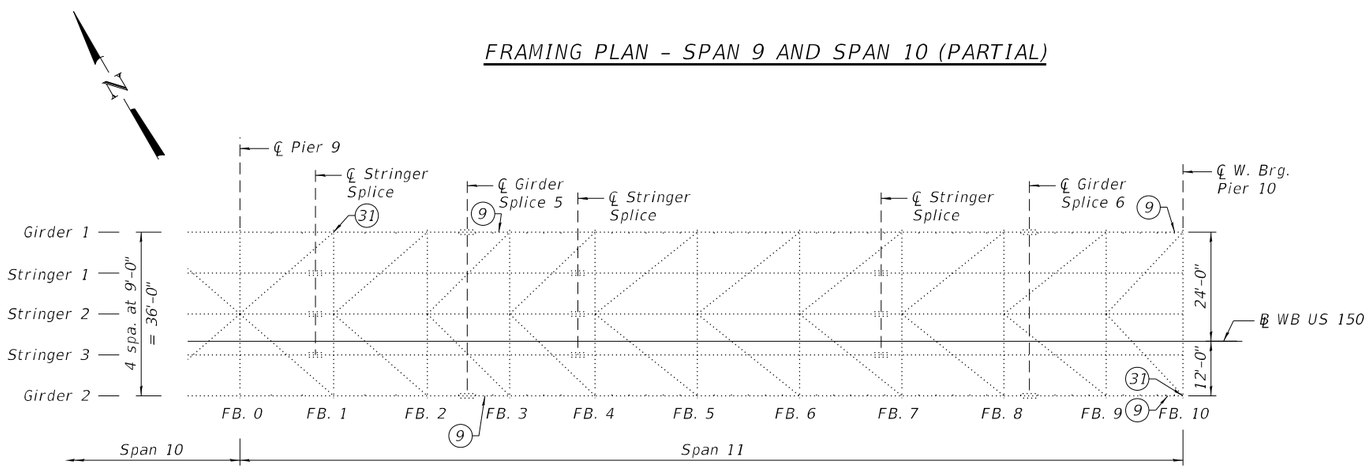

FRAMING PLAN - SPAN 11

* See Electrical Plans for repair and/or replacement details.

WEST APPROACH REPAIR SCHEDULE - 4

ID. NO.	Item	Location (NBIS Item Number)	Action
9	Girder Strengthening	Spans 9 and 11, Girders 1 and 2, near Piers 7 and 10 and near Girder Splices 2 and 5	Install additional transverse stiffeners
10	Cross Frame Bottom Strut	Span 9 at Pier 7 under FB. 0 (131)	Replace in-kind
11	Cross Frame Diagonal Bracing	Span 9 at Pier 7 under FB. 0 (131)	Replace in-kind
12	Floorbeam Flange	Span 9, FB. 0, Bottom Flange, Full Length (116)	Install repair plates and/or angles
31	Electrical Components*	Span 11, Girder 1 at FB. 1 (176); Pier 10 at South Bearing (206)	Repair broken conduit

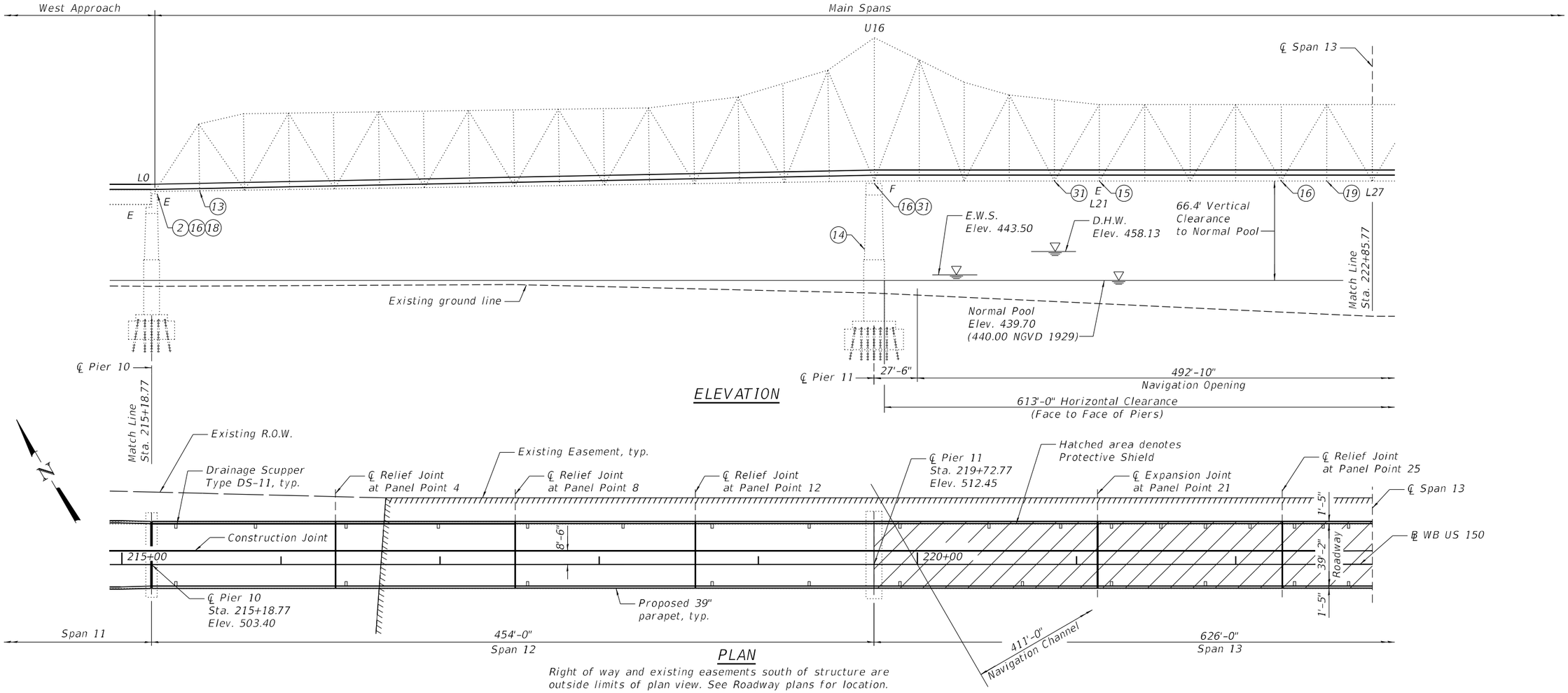

Right of way and existing easements south of structure are outside limits of plan view. See Roadway plans for location.

MAIN SPAN REPAIR SCHEDULE - 1			
ID. NO.	Item	Location (NBIS Item Number)	Action
-	Bridge Deck	West Abutment to East Abutment (2, 3, 97, 107)	Remove and replace bridge deck and parapets. Install shear studs on existing stringers and floorbeams, except at FB0 and FB21C, as part of this work.
-	Expansion Joints	Expansion joints at Panel Point 21 (108)	Replace expansion joints
-	Relief Joints	Relief joints at Panel Points 4, 8, 12 and 25	Replace strip seals at stringer relief joints
-	Protective Coat	West Bridge Approach Slab to East Bridge Approach Slab	Apply protective coat to top of deck and parapets
-	Structure Painting	West Abutment to East Abutment (1)	Clean and paint entire superstructure and fixed bearings
-	Miscellaneous Fastener Repairs	Various members, Various locations (101, 102, 132, 141, 193, 194)	Replace defective or missing fasteners; fill misdrilled holes with bolts
-	Lower Chords	Full length (170)	Drill drain holes at panel points
2	Bearings	Expansion bearings at Pier 10	Replace expansion bearings
13	Gusset Plate	L1S Inside Plate (133)	Install repair plates and angles
14	Pier	Pier 11 (71)	Install steel straps over loose armor angle
15	Guide Pins	L21N (188) and L21S (189)	Remove and replace existing guide pin and install repair plates
16	Access Platforms	At L0N, L16N and L25N (119)	Reconstruct navigation light access platforms
18	Drainage System Repairs	North side of Pier 10 (106)	Clean clogged finger plate trough downspout
19	Welds	L26N-L27N at L26N (4)	Grind cracked welds and remove unused bracket
31	Electrical Components*	At L16N (207); At L20N (178)	Repair broken navigation light and repair broken conduit

* See Electrical Plans for repair and/or replacement details.

Note:
Elevations shown on plan view are after grinding.

MODEL: Default
FILE NAME: P:\4312-VBM\CLugageRehab\CADD\Structural_SN 090-0115_WBMainBridge_Final Plans\0900115-68E44-013-RepairSchedules05.dgn
3/13/2025 12:37:52 PM

MODJESKI and MASTERS

USER NAME =	DESIGNED - YSS	REVISED -	
	CHECKED - RLM	REVISED -	
PLOT SCALE =	DRAWN - AEC	REVISED -	
PLOT DATE =	CHECKED - RLM	REVISED -	

STATE OF ILLINOIS
DEPARTMENT OF TRANSPORTATION

GENERAL PLAN AND ELEVATION REPAIR SCHEDULE - 5
STRUCTURE NO. 090-0115

SHEET S13 OF S214 SHEETS

F.A.P. RTE.	SECTION	COUNTY	TOTAL SHEETS	SHEET NO.
317	(15B-1)BP,BRR	PEO/TAZ	418	183
		CONTRACT NO. 68E44		
		ILLINOIS	FED. AID PROJECT	

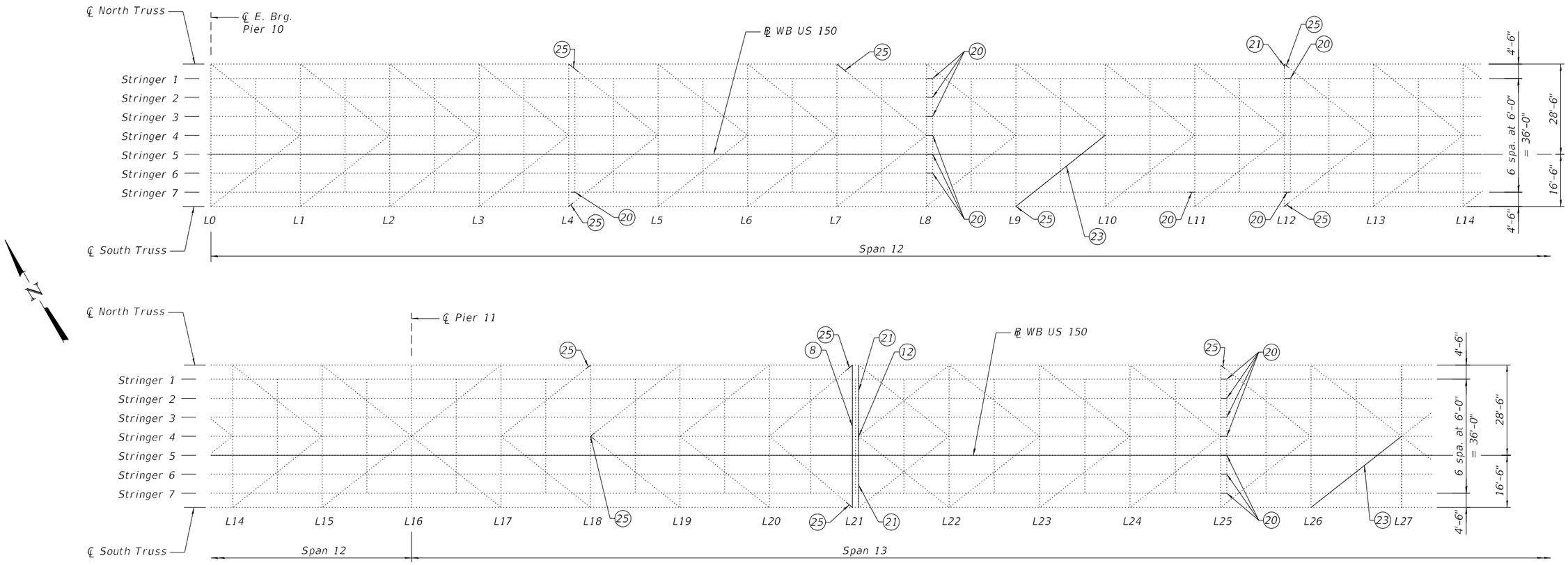

FRAMING PLAN

MAIN SPAN REPAIR SCHEDULE - 2			
ID. NO.	Item	Location (NBIS Item Number)	Action
-	Floorbeam Flange to Web Welds	Both Ends of All Floorbeams except FB. 21C (165)	Drill crack arrestor holes and/or install top flange stiffening retrofit
8	Floorbeam Replacement	FB. 21C	Replace floorbeam
12	Floorbeam Flange	FB. 21, Bottom Flange, Midspan (165)	Install repair plates and/or angles
20	Stringer Web	Str. 7 at FB. 4, Pan. 5 (117); Str. 1 (134), 2 (135), 3 (163), 4 (136), 5 (137) and 6 (138) at FB. 8, Pan. 9; Str. 7 at FB. 11, Pan. 11 (34); Str. 1 (177) and 7 (118) at FB. 12, Pan. 13; Str. 1 (143), 2 (144), 3 (145), 4 (146), 5 (147), 6 (148), and 7 (149) at FB. 25, Pan. 26	Install web repair plates and/or angles
21	Floorbeam Web	FB. 12, North End (164); FB. 21, North and South Ends (165)	Install repair plates and/or angles
23	Lateral Bracing	L9S - FB. 10 (32); L26S - FB. 27 (166)	Replace lateral bracing
25	Lateral Bracing Connection Plates	At L4N (65), at L4S (66), at L7N (30) at L9S (67), at L12N (68), at L12S (69), at L18N (72), at Midpoint of FB. 18 (140), at L25N (142), at L21NE and at L21SE	Replace connection plates

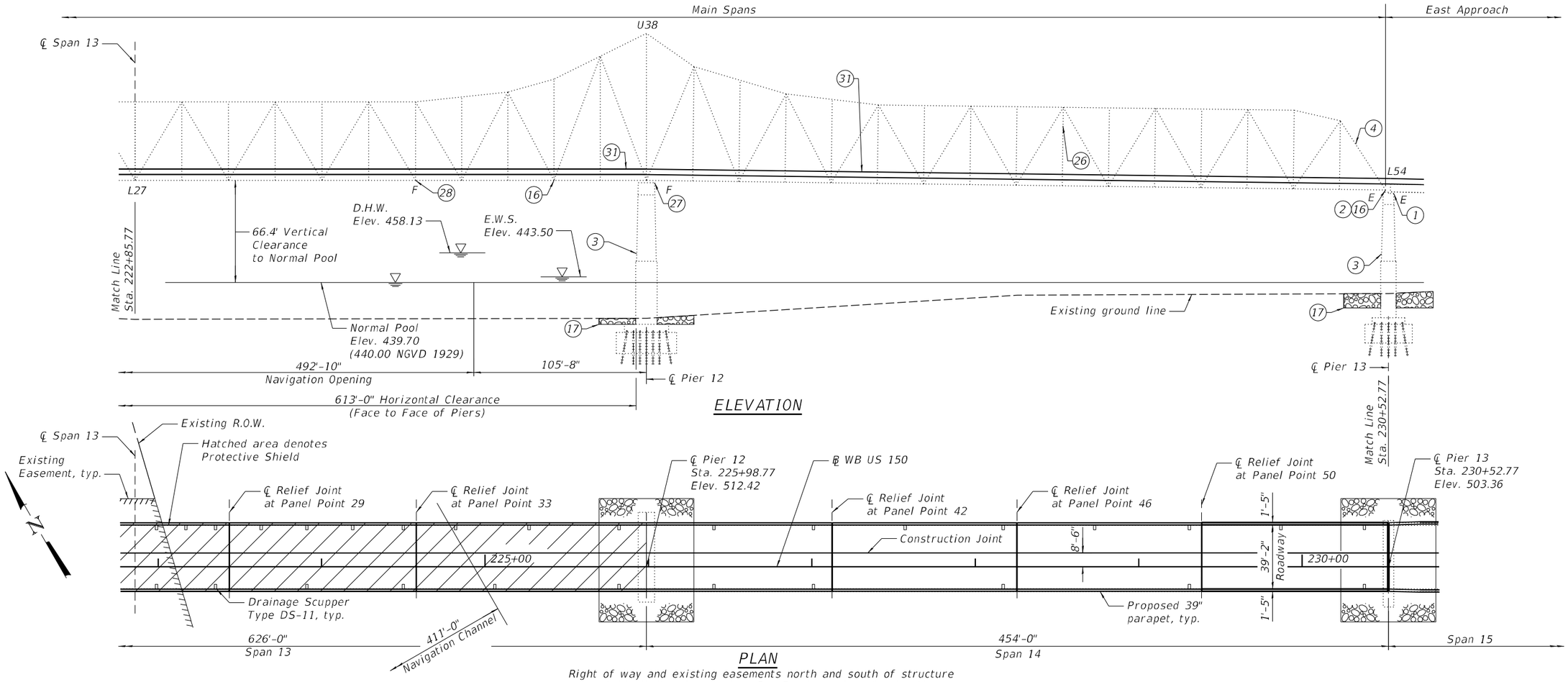

Right of way and existing easements north and south of structure are outside limits of plan view. See Roadway plans for location.

MAIN SPAN REPAIR SCHEDULE - 3

ID. NO.	Item	Location (NBIS Item Number)	Action
-	Bridge Deck	West Abutment to East Abutment (2, 3, 97)	Remove and replace bridge deck and parapets. Install shear studs on existing stringers and floorbeams, except at FB33C and FB 54, as part of this work.
-	Expansion Joints	Expansion joint at Panel Point 33 and Pier 13 (183)	Replace expansion joint
-	Relief Joints	Relief Joints at Panel Points 29, 42, 46 and 50	Replace strip seals at stringer relief joints
-	Protective Coat	West Bridge Approach Slab to East Bridge Approach Slab	Apply protective coat to top of deck and parapets
-	Structure Painting	West Abutment to East Abutment (1, 123)	Clean and paint entire superstructure and fixed bearings
-	Miscellaneous Fastener Repairs	Various members, Various locations (40, 74, 78, 81, 160, 208, 210)	Replace defective or missing fasteners; fill misdrilled holes with bolts
-	Lower Chords	Full length (170)	Drill drain holes at panel points
1	Concrete Sealer	Pier 13	Apply concrete sealer to pier cap under expansion joints
2	Bearings	Expansion bearings at Piers 13 (41)	Replace expansion bearings
3	Pier	Piers 12 (76) and 13 (82)	Structural Repair of Concrete and/or Epoxy Crack Sealing
4	Sign Structure	East End of Truss	Replace truss mounted sign structure
16	Access Platforms	at L36N and L54N	Reconstruct navigation light access platforms
17	Scour Countermeasure	Piers 12 and 13	Install filter mattress and riprap
26	Sway Bracing	Lower connection at L47S-U47S (181)	Repair cracked weld
27	Bearings	North (77) and South (78) bearings at Pier 12	Replace missing cotter pins
28	Truss Pin Washer	L33N, Inside face of truss (190)	Replace broken washer at truss pin
31	Electrical Components*	North Parapet between L37N and L38N (75); North Parapet between L42N and L43N (168)	Repair junction box

* See Electrical Plans for repair and/or replacement details.

Notes:
Elevations shown on plan view are after grinding.
See Roadway Plans for sign structure and scour countermeasure details.

MODEL: Default
FILE NAME: P:\4312-WBM\CLiggageRehab\CADD\Structural_SN 090-0115_WBMainBridge_Final Plans\0900115-68E44-015-RepairSched.dgn

3/13/2025 12:38:02 PM

MODJESKI and MASTERS

USER NAME =	DESIGNED - YSS	REVISED -	
	CHECKED - RLM	REVISED -	
PLOT SCALE =	DRAWN - AEC	REVISED -	
PLOT DATE =	CHECKED - RLM	REVISED -	

STATE OF ILLINOIS
DEPARTMENT OF TRANSPORTATION

GENERAL PLAN AND ELEVATION REPAIR SCHEDULE - 7
STRUCTURE NO. 090-0115

SHEET S15 OF S214 SHEETS

F.A.P. RTE.	SECTION	COUNTY	TOTAL SHEETS	SHEET NO.
317	(15B-1)BP,BRR	PEO/TAZ	418	185
		CONTRACT NO. 68E44		
		ILLINOIS	FED. AID PROJECT	

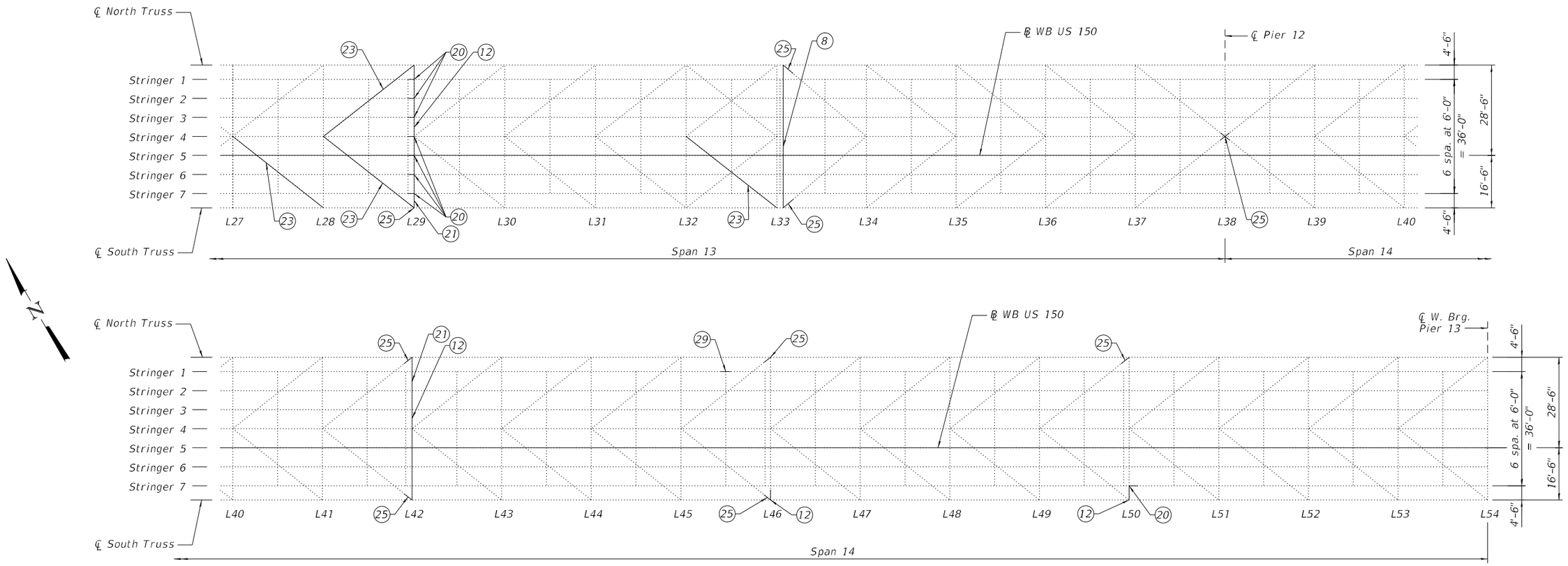

FRAMING PLAN

MAIN SPAN REPAIR SCHEDULE - 4			
ID. NO.	Item	Location (NBIS Item Number)	Action
-	Floorbeam Flange to Web Welds	Both Ends of All Floorbeams except FB. 33C (180, 182, 191)	Drill crack arrestor holes and/or install top flange stiffening retrofit
8	Floorbeam Replacement	FB. 33C	Replace floorbeam
12	Floorbeam Flange	FB. 29, Top and Bottom Flange, Full Length (121); FB. 42, Bottom Flange, Full Length (159); FB. 46, Bottom Flange, South End (160); FB. 50, Bottom Flange, South End (162)	Install repair plates and/or angles
20	Stringer Web	Str. 1 (150), 2 (151), 3 (152), 4 (153), 5 (154), 6 (155) and 7 (156) at FB. 29, Pan. 29; Str. 7 at FB. 50, Pan. 51 (125)	Install web repair plates and/or angles
21	Floorbeam Web	FB. 29, South End (121); FB. 42, North End (159)	Install web repair plates and/or angles
23	Lateral Bracing	FB. 27-L28S (167); FB. 28-L29S (179); FB. 28-L29N (195); FB. 32-L33S (157)	Replace lateral bracing
25	Lateral Bracing Connection Plates	FB. 28-L29S at L29S (179); FB. 32-L33NW at L33NW, FB. 32-L33SW at L33SW, L37N-FB. 38 at FB. 38 (158); FB. 41-L42N at L42N (79); FB. 41-L42S at L42S (80); FB. 45-L46N at L46N (124); FB. 45-L46S at L46S (161); L50N-FB. 49 at L50N (209)	Replace connection plates
29	Stringer Flange	Str. 1 at Midspan, Pan. 46 (15)	Mechanically straighten bottom flange

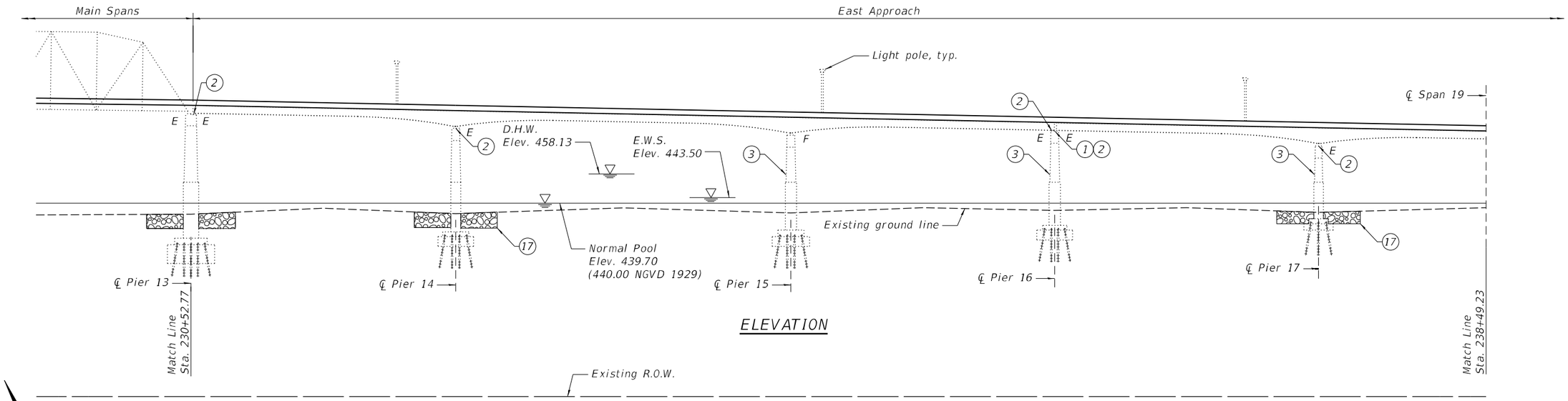

ELEVATION

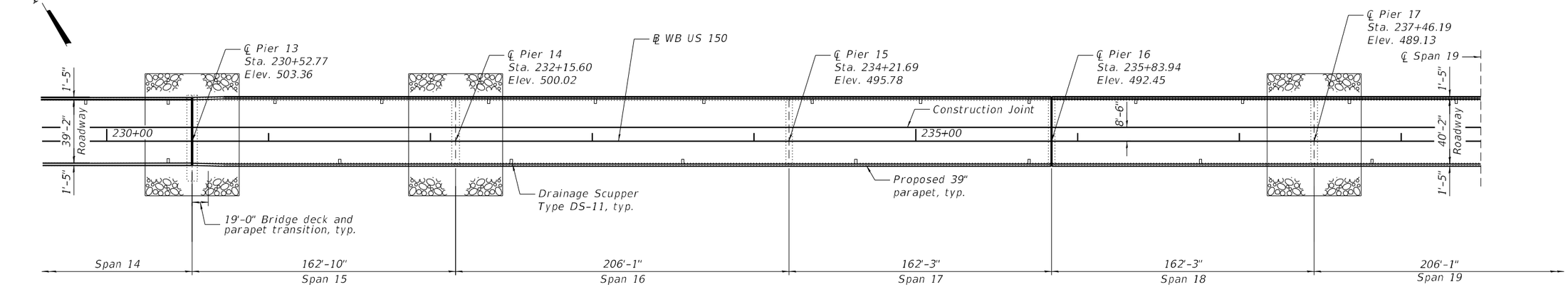

PLAN

Right of way and existing easements south of structure are outside limits of plan view. See Roadway plans for location.

EAST APPROACH REPAIR SCHEDULE - 1			
ID. NO.	Item	Location (NBIS Item Number)	Action
-	Bridge Deck	West Abutment to East Abutment (2, 3, 97)	Remove and replace bridge deck and parapets. Install shear studs on existing girders in Spans 15 thru 23 as part of this work.
-	Expansion Joints	Expansion joint at Pier 16	Replace expansion joint
-	Protective Coat	West Bridge Approach Slab to East Bridge Approach Slab	Apply protective coat to top of deck and parapets
-	Structure Painting	West Abutment to East Abutment (1)	Clean and paint structural steel of entire superstructure and fixed bearings
-	Miscellaneous Fastener Repairs	Various members, Various locations (42, 83, 84, 90, 103, 104, 110, 111, 198, 199)	Replace defective or missing fasteners; fill misdrilled holes with bolts
1	Concrete Sealer	Pier 16	Apply concrete sealer to pier cap under expansion joints
2	Bearings	Expansion bearings at Piers 13 (41), 14, 16 and 17 (89)	Replace expansion bearings
3	Pier	Piers 15 (85), 16 (10) and 17 (88)	Structural Repair of Concrete and/or Epoxy Crack Sealing
17	Scour Countermeasure	Piers 14 and 17	Install filter mattress and riprap

Notes:
See Electrical Plans for lighting details.
See Roadway Plans for scour countermeasure details.
Elevations shown on plan view are after grinding.

MODEL: Default
FILE NAME: P:\4312-VBM-CLugageRehab\CADD\Structural_SN 090-0115_WBMainBridge_Final Plans\0900115-68E44-017-RepairSched.dgn

MODJESKI and MASTERS

USER NAME =	DESIGNED - YSS	REVISED -	
	CHECKED - RLM	REVISED -	
PLOT SCALE =	DRAWN - AEC	REVISED -	
PLOT DATE =	CHECKED - RLM	REVISED -	

STATE OF ILLINOIS
DEPARTMENT OF TRANSPORTATION

GENERAL PLAN AND ELEVATION REPAIR SCHEDULE - 9
STRUCTURE NO. 090-0115

SHEET S17 OF S214 SHEETS

F.A.P. RTE.	SECTION	COUNTY	TOTAL SHEETS	SHEET NO.
317	(15B-1)BP,BRR	PEO/TAZ	418	187

CONTRACT NO. 68E44

ILLINOIS FED. AID PROJECT

3/13/2025 12:38:09 PM

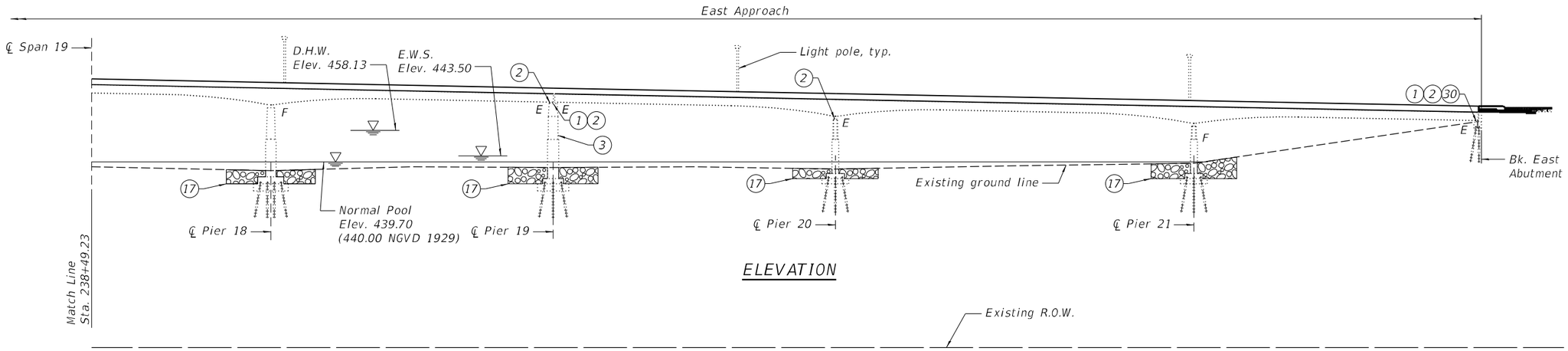

ELEVATION

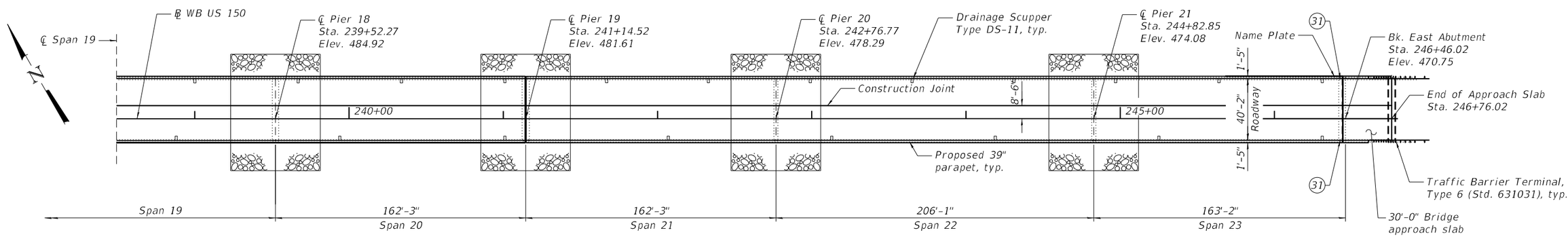

PLAN

Right of way and existing easements south of structure are outside limits of plan view. See Roadway plans for location.

EAST APPROACH REPAIR SCHEDULE - 2

ID. NO.	Item	Location (NBIS Item Number)	Action
-	Bridge Deck	West Abutment to East Abutment (2, 3, 97)	Remove and replace bridge deck and parapets. Install shear studs on existing girders in Spans 15 thru 23 as part of this work
-	Bridge Approach Slab	East end of Bridge	Remove and replace bridge approach slabs and parapets
-	Expansion Joints	Expansion joints at Pier 19 and East Abutment	Replace expansion joints
-	Protective Coat	West Bridge Approach Slab to East Bridge Approach Slab	Apply protective coat to top of deck and parapets
-	Structure Painting	West Abutment to East Abutment (1)	Clean and paint structural steel of entire superstructure and fixed bearings
-	Miscellaneous Fastener Repairs	Various members, Various locations (43, 105, 111, 126, 127, 200)	Replace defective or missing fasteners; fill misdrilled holes with bolts
1	Concrete Sealer	Pier 19 and East Abutment	Apply concrete sealer to pier and abutment caps under expansion joints
2	Bearings	Expansion bearings at Piers 19, 20, and East Abutment (47)	Replace expansion bearings
3	Pier	Pier 19 (92)	Structural Repair of Concrete and/or Epoxy Crack Sealing
17	Scour Countermeasure	Piers 18, 19, 20 and 21	Install filter mattress and riprap
30	Abutment	East Abutment (23)	Structural Repair of Concrete and/or Epoxy Crack Sealing
31	Electrical Components*	Span 23, North and South (128) ends of East Abutment	Repair broken conduit

* See Electrical Plans for repair and/or replacement details.

Notes:
See Electrical Plans for lighting details.
See Roadway Plans for scour countermeasure details.
Elevations shown on plan view are after grinding.

MODJESKI and MASTERS

USER NAME =	DESIGNED - YSS	REVISED -
	CHECKED - RLM	REVISED -
PLOT SCALE =	DRAWN - AEC	REVISED -
PLOT DATE =	CHECKED - RLM	REVISED -

STATE OF ILLINOIS
DEPARTMENT OF TRANSPORTATION

GENERAL PLAN AND ELEVATION REPAIR SCHEDULE - 10
STRUCTURE NO. 090-0115

SHEET S18 OF S214 SHEETS

F.A.P. RTE.	SECTION	COUNTY	TOTAL SHEETS	SHEET NO.
317	(15B-1)BP,BRR	PEO/TAZ	418	188

CONTRACT NO. 68E44

ILLINOIS FED. AID PROJECT

MODEL: Default
FILE NAME: P:\4312-WBMcCLugageRehab\CADD\Structural_SN 090-0115_WBMainBridge_Final Plans\09001 15-68E44-018-RepairSchedules.10.dgn
3/13/2025 12:38:12 PM

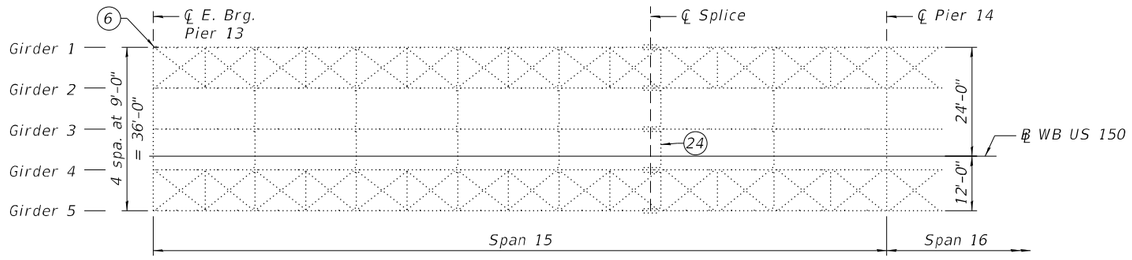

FRAMING PLAN - SPAN 15

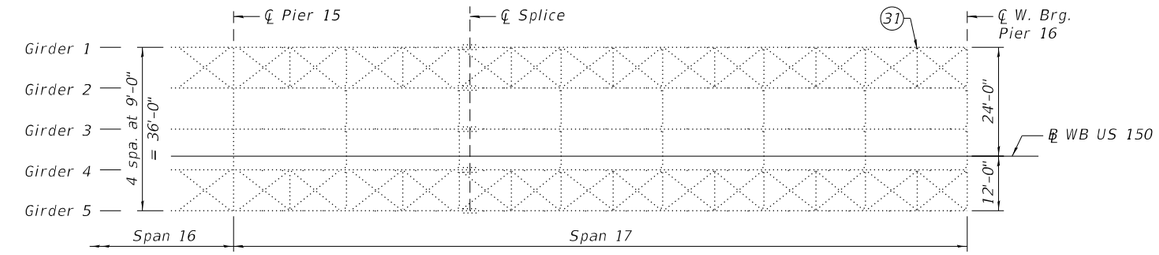

FRAMING PLAN - SPAN 17

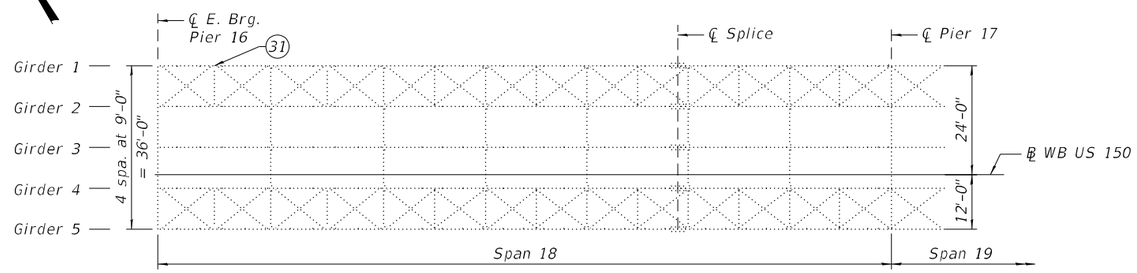

FRAMING PLAN - SPAN 18

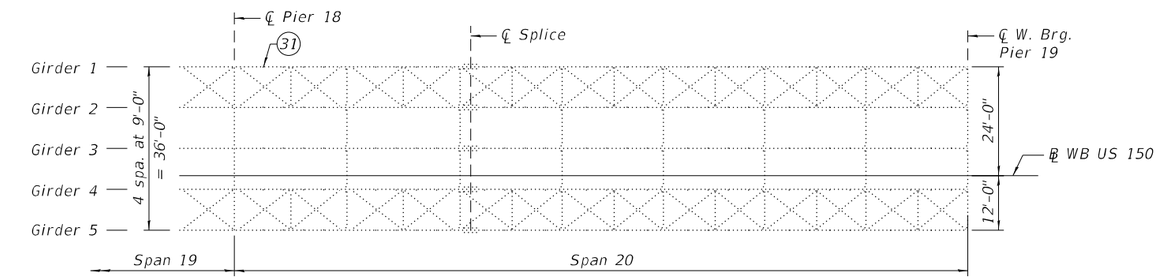

FRAMING PLAN - SPAN 20

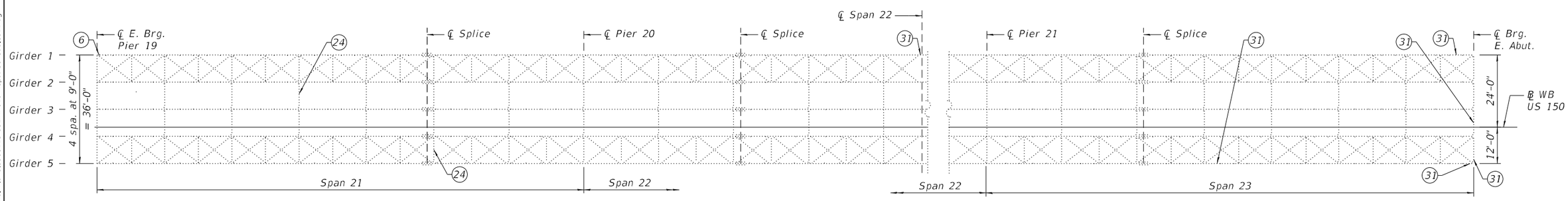

FRAMING PLAN - SPANS 21-23

EAST APPROACH REPAIR SCHEDULE - 3			
ID. NO.	Item	Location (NBIS Item Number)	Action
6	Girder Web	Span 15, Girder 1 at Pier 13 (184); Span 21, Girder 1 at Pier 19 (Item 211)	Install web repair plates and/or angles
24	Cross Frame	Span 15, 2nd Cross Frame from Pier 14 between Girders 3 and 4 (197); Span 21, 4th Cross Frame from Pier 20 between Girders 2 and 3 (212); Span 21, 2nd Cross Frame from Pier 20 between Girders 4 and 5 (201)	Repair cracked weld
31	Electrical Components*	Span 17, Girder 1, 10' West of Pier 16 (185); Span 18, Girder 1, 10' East of Pier 16 (87); Span 20, Girder 1, 5' East of Pier 18 (91); Span 22, Girder 1, Midspan (213); Span 23, East of 4th C.F. from Pier 21 between Girders 4 and 5 (45); Span 23, Girder 1, 5' from East Abutment (95); Span 23, at East Abutment between Girders 3 and 4 (96); Span 23, Girder 5, inside face at East Abutment (202); Span 23, South Corner of East Abutment (128)	Repair broken conduit

* See Electrical Plans for repair and/or replacement details.

MODEL: Default
FILE NAME: P:\4312-VBM\CLugageRehab\CADD\Structural_SN 090-0115_WBMainBridge_Final Plans\09000115-68E44-019-RepairSchedules11.dgn

3/13/2025 12:38:17 PM

MODJESKI and MASTERS

USER NAME =	DESIGNED - YSS	REVISED -
	CHECKED - RLM	REVISED -
PLOT SCALE =	DRAWN - AEC	REVISED -
PLOT DATE =	CHECKED - RLM	REVISED -

STATE OF ILLINOIS
DEPARTMENT OF TRANSPORTATION

GENERAL PLAN AND ELEVATION REPAIR SCHEDULE - 11
STRUCTURE NO. 090-0115

SHEET S19 OF S214 SHEETS

F.A.P. RTE.	SECTION	COUNTY	TOTAL SHEETS	SHEET NO.
317	(15B-1)BP,BRR	PEO/TAZ	418	189
		CONTRACT NO. 68E44		
	ILLINOIS	FED. AID PROJECT		

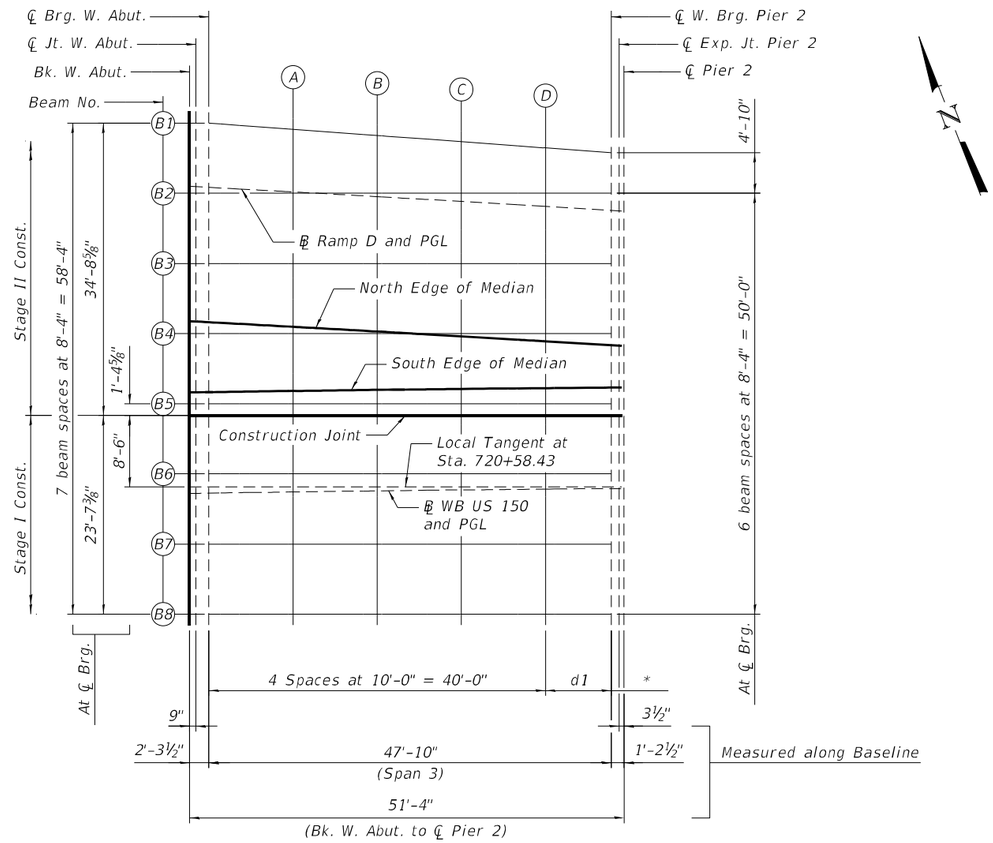

* Measure along respective ℄ beams, construction joint, and profile grade lines.

PLAN

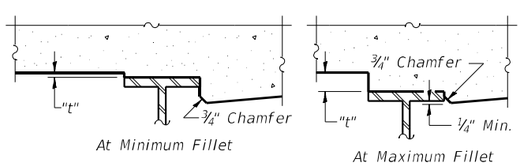

To determine "t": After all structural steel has been erected, elevations of the top flanges of the beams shall be taken at intervals shown on sheets S21 and S22 of S214. These elevations subtracted from the "Theoretical Grade Elevations Adjusted for Dead Load Deflection and Grinding" shown on sheets S21 and S22 of S214, minus the initial slab thickness prior to grinding, equals the fillet heights "t" above top flange of beams.

The slab is to be ground after curing to achieve smoothness, but the slab is not to be ground to elevations below the "Theoretical Grade Elevations" shown on sheets S21 and S22 of S214. For grinding the deck, see Special Provisions.

FILLET HEIGHTS

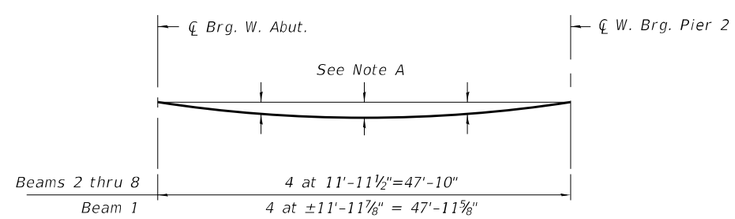

DEAD LOAD DEFLECTION DIAGRAM

(Includes weight of concrete only.)

Note:
The above deflections are not to be used in the field if the Engineer is working from the grade elevations adjusted for dead load deflections and grinding as shown on sheets S21 and S22 of S214.

Note A:
Dead load deflections will be provided to the Contractor in accordance with the special provision "Contractor Requirements for Dead Load Deflection and Top of Slab Elevation Data."

SPAN DIMENSIONS

Location	*d1
Beam 1	7'-11⅝"
Beams 2 thru 8	7'-10"
℄ Ramp D and PGL	7'-11"
Construction Joint	7'-10"
℄ WB US 150 and PGL	7'-10⅛"

MODEL: Default
FILE NAME: P:\4312-WBMcClugageRehab\CADD\Structural_SN 090-0115_WBMainBridge_Final Plans\0900115-68E44-020-TOSE-Span 3_01.dgn
3/13/2025 12:38:20 PM

MODJESKI and MASTERS

USER NAME =	DESIGNED - YSS	REVISED -	
	CHECKED - UB	REVISED -	
PLOT SCALE =	DRAWN - ELK	REVISED -	
PLOT DATE =	CHECKED - YSS	REVISED -	

STATE OF ILLINOIS
DEPARTMENT OF TRANSPORTATION

TOP OF SLAB ELEVATIONS - SPAN 3 - 1
STRUCTURE NO. 090-0115

SHEET S20 OF S214 SHEETS

F.A.P. RTE.	SECTION	COUNTY	TOTAL SHEETS	SHEET NO.
317	(15B-1)BP,BRR	PEO/TAZ	418	190

CONTRACT NO. 68E44

ILLINOIS | FED. AID PROJECT

BEAM 1

Location	Station	Offset	Theoretical Grade Elevations	Theoretical Grade Elevations Adjusted For Dead Load Deflection and Grinding
Bk. W. Abut.	11+95.71	7.66	503.71	See Note A
CL Jt. W. Abut.	11+94.96	7.64	503.69	
CL Brg. W. Abut.	11+93.42	7.61	503.66	
A	11+83.43	7.42	503.41	
B	11+73.45	7.25	503.17	
C	11+63.46	7.09	502.92	
D	11+53.47	6.95	502.67	
CL W. Brg. Pier 2	11+45.51	6.85	502.46	
CL Exp. Jt. Pier 2	11+44.59	6.84	502.44	

℄ RAMP D AND PG

Location	Station	Offset	Theoretical Grade Elevations	Theoretical Grade Elevations Adjusted For Dead Load Deflection and Grinding
Bk. W. Abut.	11+95.31	0.00	503.85	See Note A
CL Jt. W. Abut.	11+94.56	0.00	503.84	
CL Brg. W. Abut.	11+93.01	0.00	503.80	
A	11+83.01	0.00	503.55	
B	11+73.01	0.00	503.30	
C	11+63.01	0.00	503.05	
D	11+53.01	0.00	502.79	
CL W. Brg. Pier 2	11+45.10	0.00	502.59	
CL Exp. Jt. Pier 2	11+44.18	0.00	502.57	

BEAM 2

Location	Station	Offset	Theoretical Grade Elevations	Theoretical Grade Elevations Adjusted For Dead Load Deflection and Grinding
Bk. W. Abut.	11+95.26	-0.83	503.87	See Note A
CL Jt. W. Abut.	11+94.51	-0.79	503.85	
CL Brg. W. Abut.	11+92.97	-0.71	503.81	
A	11+82.99	-0.17	503.55	
B	11+73.00	0.39	503.29	
C	11+63.02	0.96	503.03	
D	11+53.04	1.55	502.76	
CL W. Brg. Pier 2	11+45.22	2.02	502.55	
CL Exp. Jt. Pier 2	11+44.30	2.08	502.53	

BEAM 3

Location	Station	Offset	Theoretical Grade Elevations	Theoretical Grade Elevations Adjusted For Dead Load Deflection and Grinding
Bk. W. Abut.	11+94.82	-9.15	504.03	See Note A
CL Jt. W. Abut.	11+94.07	-9.11	504.01	
CL Brg. W. Abut.	11+92.53	-9.03	503.97	
A	11+82.53	-8.49	503.71	
B	11+72.53	-7.93	503.45	
C	11+62.54	-7.36	503.18	
D	11+52.54	-6.77	502.92	
CL W. Brg. Pier 2	11+44.71	-6.30	502.71	
CL Exp. Jt. Pier 2	11+43.80	-6.24	502.68	

NORTH EDGE OF MEDIAN

Location	Station	Offset	Theoretical Grade Elevations	Theoretical Grade Elevations Adjusted For Dead Load Deflection and Grinding
Bk. W. Abut.	11+94.46	-16.00	504.15	See Note A
CL Jt. W. Abut.	11+93.70	-16.00	504.14	
CL Brg. W. Abut.	11+92.15	-16.00	504.10	
A	11+82.13	-16.00	503.85	
B	11+72.11	-16.00	503.60	
C	11+62.08	-16.00	503.35	
D	11+52.06	-16.00	503.09	
CL W. Brg. Pier 2	11+44.12	-16.00	502.89	
CL Exp. Jt. Pier 2	11+43.20	-16.00	502.86	

BEAM 4

Location	Station	Offset	Theoretical Grade Elevations	Theoretical Grade Elevations Adjusted For Dead Load Deflection and Grinding
Bk. W. Abut.	11+94.38	-17.48	504.16	See Note A
CL Jt. W. Abut.	11+93.63	-17.44	504.14	
CL Brg. W. Abut.	11+92.08	-17.35	504.10	
A	11+82.07	-16.81	503.85	
B	11+72.06	-16.25	503.60	
C	11+62.05	-15.68	503.34	
D	11+52.05	-15.09	503.07	
CL W. Brg. Pier 2	11+44.20	-14.61	502.86	
CL Exp. Jt. Pier 2	11+43.29	-14.56	502.84	

SOUTH EDGE OF MEDIAN

Location	Station	Offset	Theoretical Grade Elevations	Theoretical Grade Elevations Adjusted For Dead Load Deflection and Grinding
Bk. W. Abut.	719+58.56	-12.00	504.18	See Note A
CL Jt. W. Abut.	719+59.31	-12.00	504.16	
CL Brg. W. Abut.	719+60.84	-12.00	504.12	
A	719+70.83	-12.00	503.87	
B	719+80.81	-12.00	503.63	
C	719+90.79	-12.00	503.38	
D	720+00.77	-12.00	503.13	
CL W. Brg. Pier 2	720+08.60	-12.00	502.93	
CL Exp. Jt. Pier 2	720+09.51	-12.00	502.91	

BEAM 5

Location	Station	Offset	Theoretical Grade Elevations	Theoretical Grade Elevations Adjusted For Dead Load Deflection and Grinding
Bk. W. Abut.	719+58.54	-10.65	504.20	See Note A
CL Jt. W. Abut.	719+59.28	-10.64	504.18	
CL Brg. W. Abut.	719+60.82	-10.62	504.14	
A	719+70.81	-10.48	503.90	
B	719+80.79	-10.35	503.65	
C	719+90.77	-10.24	503.40	
D	720+00.76	-10.14	503.15	
CL W. Brg. Pier 2	720+08.58	-10.08	502.96	
CL Exp. Jt. Pier 2	720+09.50	-10.07	502.94	

CONSTRUCTION JOINT

Location	Station	Offset	Theoretical Grade Elevations	Theoretical Grade Elevations Adjusted For Dead Load Deflection and Grinding
Bk. W. Abut.	719+58.51	-9.27	504.22	See Note A
CL Jt. W. Abut.	719+59.26	-9.26	504.20	
CL Brg. W. Abut.	719+60.80	-9.23	504.17	
A	719+70.79	-9.09	503.92	
B	719+80.77	-8.96	503.67	
C	719+90.76	-8.85	503.42	
D	720+00.74	-8.76	503.18	
CL W. Brg. Pier 2	720+08.57	-8.69	502.98	
CL Exp. Jt. Pier 2	720+09.49	-8.68	502.96	

Note:
Offsets for Beam 1 thru 4 and the north edge of the median are measured from the Profile Grade for ℄ Ramp D. Offset for the south edge of median, Beam 5, and construction joint are measured from the Profile Grade for ℄ WB US 150.

Note A:
Theoretical Grade Elevations Adjusted for Dead Load Deflection and Grinding will be provided to the Contractor in accordance with the special provision "Contractor Requirements for Dead Load Deflection and Top of Slab Elevation Data."

MODEL: Default
FILE NAME: P:\4312-VBM\CLugageRehab\CADD\Structural_SN 090-0115_WBMainBridge_Final Plans\0900115-68E44-021-TOSE-Span 3_02.dgn

MODJESKI and MASTERS

USER NAME =	DESIGNED - YSS	REVISED -
	CHECKED - UB	REVISED -
PLOT SCALE =	DRAWN - JJE	REVISED -
PLOT DATE =	CHECKED - YSS	REVISED -

STATE OF ILLINOIS
DEPARTMENT OF TRANSPORTATION

TOP OF SLAB ELEVATIONS - SPAN 3 - 2
STRUCTURE NO. 090-0115

SHEET S21 OF S214 SHEETS

F.A.P. RTE.	SECTION	COUNTY	TOTAL SHEETS	SHEET NO.
317	(15B-1)BP,BRR	PEO/TAZ	418	191

CONTRACT NO. 68E44

ILLINOIS | FED. AID PROJECT

3/13/2025 12:38:23 PM

BEAM 6

Location	Station	Offset	Theoretical Grade Elevations	Theoretical Grade Elevations Adjusted For Dead Load Deflection and Grinding
Bk. W. Abut.	719+58.41	-2.32	504.33	See Note A
CL Jt. W. Abut.	719+59.16	-2.31	504.31	
CL Brg. W. Abut.	719+60.70	-2.29	504.27	
A	719+70.69	-2.14	504.03	
B	719+80.69	-2.02	503.78	
C	719+90.69	-1.91	503.53	
D	720+00.68	-1.81	503.28	
CL W. Brg. Pier 2	720+08.52	-1.74	503.09	
CL Exp. Jt. Pier 2	720+09.44	-1.74	503.06	

℄ WB US 150 AND PG

Location	Station	Offset	Theoretical Grade Elevations	Theoretical Grade Elevations Adjusted For Dead Load Deflection and Grinding
Bk. W. Abut.	719+58.37	0.00	504.37	See Note A
CL Jt. W. Abut.	719+59.12	0.00	504.35	
CL Brg. W. Abut.	719+60.66	0.00	504.31	
A	719+70.66	0.00	504.06	
B	719+80.66	0.00	503.81	
C	719+90.66	0.00	503.56	
D	720+00.66	0.00	503.31	
CL W. Brg. Pier 2	720+08.51	0.00	503.11	
CL Exp. Jt. Pier 2	720+09.42	0.00	503.09	

BEAM 7

Location	Station	Offset	Theoretical Grade Elevations	Theoretical Grade Elevations Adjusted For Dead Load Deflection and Grinding
Bk. W. Abut.	719+58.28	6.01	504.28	See Note A
CL Jt. W. Abut.	719+59.03	6.02	504.26	
CL Brg. W. Abut.	719+60.57	6.05	504.22	
A	719+70.58	6.19	503.97	
B	719+80.59	6.32	503.72	
C	719+90.60	6.43	503.46	
D	720+00.61	6.52	503.21	
CL W. Brg. Pier 2	720+08.46	6.59	503.02	
CL Exp. Jt. Pier 2	720+09.37	6.60	502.99	

BEAM 8

Location	Station	Offset	Theoretical Grade Elevations	Theoretical Grade Elevations Adjusted For Dead Load Deflection and Grinding
Bk. W. Abut.	719+58.15	14.34	504.14	See Note A
CL Jt. W. Abut.	719+58.90	14.35	504.12	
CL Brg. W. Abut.	719+60.45	14.38	504.08	
A	719+70.47	14.52	503.83	
B	719+80.49	14.65	503.58	
C	719+90.51	14.76	503.32	
D	720+00.53	14.86	503.07	
CL W. Brg. Pier 2	720+08.39	14.92	502.87	
CL Exp. Jt. Pier 2	720+09.31	14.93	502.85	

Note:
Offsets for Beams 6 thru 8 are measured from the Profile Grade for ℄ WB US 150.

Note A:
Theoretical Grade Elevations Adjusted for Dead Load Deflection and Grinding will be provided to the Contractor in accordance with the special provision "Contractor Requirements for Dead Load Deflection and Top of Slab Elevation Data."

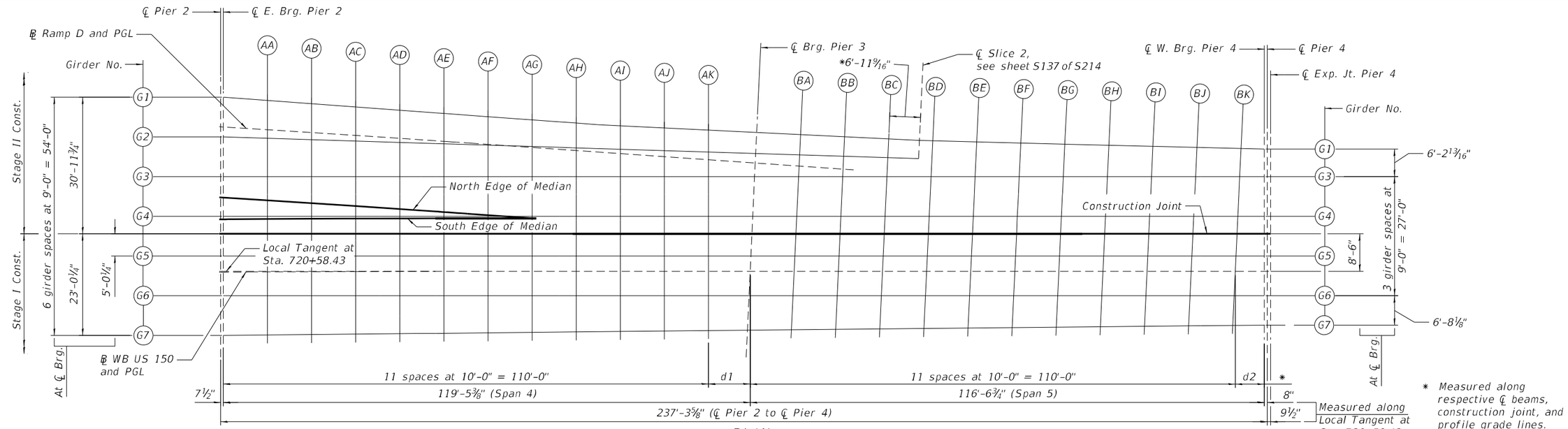

* Measured along respective ℄ beams, construction joint, and profile grade lines.

PLAN

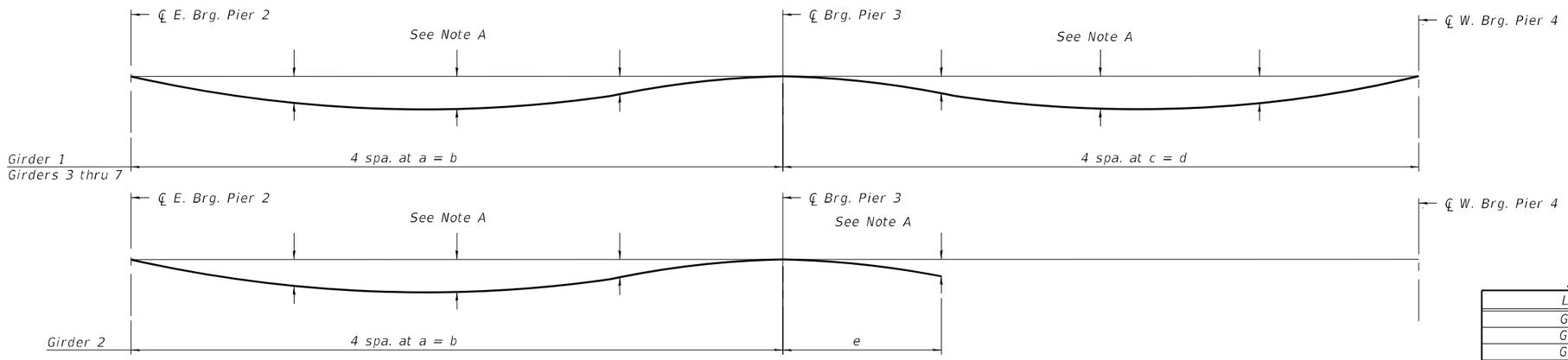

DEAD LOAD DEFLECTION DIAGRAM

Includes weight of concrete and sign structrure.

Note:
The above deflections are not to be used in the field if the engineer is working from the grade elevations adjusted for dead load deflections and grinding as shown on sheets S24 and S25 of S214.

Note A:
Dead load deflections will be provided to the Contractor in accordance with the special provision "Contractor Requirements for Dead Load Deflection and Top of Slab Elevation Data."

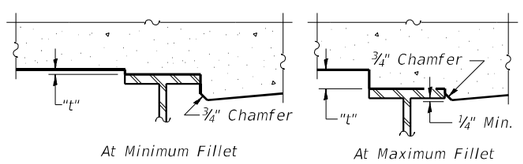

To determine "t": After all structural steel has been erected, elevations of the top flanges of the beams shall be taken at intervals shown on sheets S24 and S25 of S214. These elevations subtracted from the "Theoretical Grade Elevations Adjusted for Dead Load Deflection and Grinding" shown on sheets S24 and S25 of S214, minus the initial slab thickness prior to grinding, equals the fillet heights "t" above top flange of beams.

The slab is to be ground after curing to achieve smoothness, but the slab is not to be ground to elevations below the "Theoretical Grade Elevations" shown on sheets S24 and S25 of S214. For grinding the deck, see Special Provisions.

FILLET HEIGHTS

SPAN DIMENSIONS

Location	*d1	*d2
Girder 1	11'-2 3/16"	5'-2"
Girder 2	10'-8 15/16"	-
Girder 3	10'-5 5/16"	5'-6 11/16"
Girder 4	10'-0 5/16"	5'-11 11/16"
Girder 5	9'-7¼"	6'-4¾"
Girder 6	9'-2¼"	6'-9¾"
Girder 7	8'-9 15/16"	7'-2 3/16"
℄ Ramp D and PGL	10'-10 7/16"	-
Construction Joint	9'-10⅛"	6'-2"
℄ WB US 150 and PGL	9'-5⅜"	6'-6¾"

GIRDER DIMENSIONS

Location	a	b	c	d	e
Girder 1	30'-3 9/16"	121'-2⅛"	28'-9½"	115'-2"	-
Girder 2	30'-2¼"	120'-8 15/16"	-	-	36'-11 9/16"
Girder 3	30'-1 5/16"	120'-5 5/16"	28'-10⅝"	115'-6 11/16"	-
Girder 4	30'-0 1/16"	120'-0 5/16"	28'-11 15/16"	115'-11 11/16"	-
Girder 5	29'-10 13/16"	119'-7¼"	29'-1 3/16"	116'-4¾"	-
Girder 6	29'-9 9/16"	119'-2¼"	29'-2 7/16"	116'-9¾"	-
Girder 7	29'-8½"	118'-9 15/16"	29'-3 9/16"	117'-2 3/16"	-

MODEL: PLOTSHEET-S4-S5_1
FILE NAME: P:\4312-WBRrCbigageRehab\CADD\Structural_SN 090-0115_WBMainBridge_Final Plans\09001115-68E44-023-TOSE-Spans 4-5_01.dgn
3/13/2025 12:38:30 PM

MODJESKI and MASTERS

USER NAME =	DESIGNED - YSS	REVISED -
	CHECKED - UB	REVISED -
PLOT SCALE =	DRAWN - JJE	REVISED -
PLOT DATE =	CHECKED - YSS	REVISED -

STATE OF ILLINOIS
DEPARTMENT OF TRANSPORTATION

TOP OF SLAB ELEVATIONS - SPANS 4-5 - 1
STRUCTURE NO. 090-0115

SHEET S23 OF S214 SHEETS

F.A.P. RTE.	SECTION	COUNTY	TOTAL SHEETS	SHEET NO.
317	(15B-1)BP,BRR	PEO/TAZ	418	193

CONTRACT NO. 68E44

ILLINOIS | FED. AID PROJECT

GIRDER 1

Location	Station	Offset	Theoretical Grade Elevations	Theoretical Grade Elevations Adjusted For Dead Load Deflection and Grinding
CL Pier 2	11+44.30	6.73	502.44	
CL E. Brg. Pier 2	11+43.67	6.72	502.42	
AA	11+33.68	6.61	502.18	
AB	11+23.69	6.51	501.94	
AC	11+13.70	6.43	501.72	
AD	11+03.71	6.36	501.50	
AE	10+93.72	6.31	501.29	
AF	10+83.73	6.27	501.10	
AG	10+73.73	6.24	500.91	
AH	200+32.55	-33.64	500.72	
AI	200+42.53	-33.03	500.56	
AJ	200+52.52	-32.54	500.40	See Note A
AK	200+62.50	-32.05	500.25	
CL Brg. Pier 3	200+73.68	-31.50	500.09	
BA	200+83.66	-31.01	499.96	
BB	200+93.65	-30.52	499.83	
BC	201+03.64	-30.03	499.72	
BD	201+13.63	-29.61	499.61	
BE	201+23.63	-29.36	499.51	
BF	201+33.62	-29.11	499.41	
BG	201+43.62	-28.85	499.33	
BH	201+53.62	-28.60	499.25	
BI	201+63.61	-28.35	499.18	
BJ	201+73.61	-28.10	499.12	
BK	201+83.61	-27.85	499.07	
CL W. Brg. Pier 4	201+88.77	-27.72	499.05	
CL Pier 4	201+89.44	-27.70	499.05	
CL Exp. Jt. Pier 4	201+90.23	-27.68	499.05	

℄ RAMP D AND PG

Location	Station	Offset	Theoretical Grade Elevations	Theoretical Grade Elevations Adjusted For Dead Load Deflection and Grinding
CL Pier 2	11+43.88	0.00	502.56	
CL E. Brg. Pier 2	11+43.26	0.00	502.54	
AA	11+33.26	0.00	502.30	
AB	11+23.26	0.00	502.06	
AC	11+13.26	0.00	501.83	
AD	11+03.26	0.00	501.62	
AE	10+93.26	0.00	501.41	
AF	10+83.26	0.00	501.21	
AG	10+73.26	0.00	501.03	
AH	200+32.58	-27.41	500.85	
AI	200+42.56	-26.72	500.68	
AJ	200+52.53	-26.02	500.52	See Note A
AK	200+62.51	-25.32	500.38	
CL Brg. Pier 3	200+73.35	-24.56	500.23	
BA	200+83.33	-23.86	500.10	
BB	200+93.30	-23.17	499.98	

GIRDER 2

Location	Station	Offset	Theoretical Grade Elevations	Theoretical Grade Elevations Adjusted For Dead Load Deflection and Grinding
CL Pier 2	11+43.74	-2.28	502.60	
CL E. Brg. Pier 2	11+43.12	-2.26	502.59	
AA	11+33.12	-1.96	502.33	
AB	11+23.12	-1.63	502.09	
AC	11+13.13	-1.29	501.86	
AD	11+03.13	-0.94	501.63	
AE	10+93.14	-0.57	501.42	
AF	10+83.14	-0.18	501.22	
AG	10+73.15	0.20	501.02	
AH	200+32.72	-27.99	500.83	
AI	200+42.72	-27.68	500.66	
AJ	200+52.71	-27.37	500.50	See Note A
AK	200+62.71	-27.06	500.34	
CL Brg. Pier 3	200+73.45	-26.73	500.19	
BA	200+83.45	-26.42	500.05	
BB	200+93.44	-26.11	499.92	
BC	201+03.44	-25.80	499.80	
CL Splice 2	201+10.40	-25.58	499.73	

GIRDER 3

Location	Station	Offset	Theoretical Grade Elevations	Theoretical Grade Elevations Adjusted For Dead Load Deflection and Grinding
CL Pier 2	11+43.19	-11.29	502.77	
CL E. Brg. Pier 2	11+42.57	-11.25	502.75	
AA	11+32.57	-10.63	502.49	
AB	11+22.58	-9.99	502.25	
AC	11+12.58	-9.34	502.01	
AD	11+02.59	-8.68	501.78	
AE	10+92.60	-8.00	501.56	
AF	10+82.62	-7.30	501.35	
AG	10+72.64	-6.60	501.15	
AH	200+32.76	-21.48	500.96	
AI	200+42.76	-21.48	500.78	
AJ	200+52.76	-21.48	500.62	See Note A
AK	200+62.76	-21.48	500.45	
CL Brg. Pier 3	200+73.21	-21.48	500.30	
BA	200+83.21	-21.48	500.15	
BB	200+93.21	-21.48	500.02	
BC	201+03.21	-21.48	499.89	
BD	201+13.21	-21.48	499.78	
BE	201+23.21	-21.48	499.67	
BF	201+33.21	-21.48	499.57	
BG	201+43.21	-21.48	499.48	
BH	201+53.21	-21.48	499.40	
BI	201+63.21	-21.48	499.32	
BJ	201+73.21	-21.48	499.26	
BK	201+83.21	-21.48	499.20	
CL W. Brg. Pier 4	201+88.77	-21.48	499.18	
CL Pier 4	201+89.44	-21.48	499.17	
CL Exp. Jt. Pier 4	201+90.23	-21.48	499.17	

NORTH EDGE OF MEDIAN

Location	Station	Offset	Theoretical Grade Elevations	Theoretical Grade Elevations Adjusted For Dead Load Deflection and Grinding
CL Pier 2	11+42.90	-16.00	502.86	
CL E. Brg. Pier 2	11+42.28	-16.00	502.84	See Note A
AA	11+32.25	-16.00	502.59	
AB	11+22.23	-16.00	502.36	
AC	11+12.20	-16.00	502.13	
AD	11+02.18	-16.00	501.91	
AE	10+92.15	-16.00	501.71	
AF	10+82.14	-16.00	501.51	
AG	10+72.14	-16.00	501.33	

GIRDER 4

Location	Station	Offset	Theoretical Grade Elevations	Theoretical Grade Elevations Adjusted For Dead Load Deflection and Grinding
CL Pier 2	11+42.64	-20.27	502.89	
CL E. Brg. Pier 2	11+42.02	-20.23	502.88	
AA	11+32.01	-19.61	502.63	
AB	11+22.00	-18.97	502.39	
AC	11+11.99	-18.32	502.16	
AD	11+01.98	-17.66	501.94	
AE	10+91.98	-16.98	501.73	
AF	10+81.99	-16.28	501.52	
AG	10+72.01	-15.58	501.32	
AH	200+32.76	-12.48	501.14	
AI	200+42.76	-12.48	500.96	
AJ	200+52.76	-12.48	500.80	See Note A
AK	200+62.76	-12.48	500.63	
CL Brg. Pier 3	200+72.79	-12.48	500.48	
BA	200+82.79	-12.48	500.34	
BB	200+92.79	-12.48	500.20	
BC	201+02.79	-12.48	500.08	
BD	201+12.79	-12.48	499.96	
BE	201+22.79	-12.48	499.85	
BF	201+32.79	-12.48	499.75	
BG	201+42.79	-12.48	499.66	
BH	201+52.79	-12.48	499.58	
BI	201+62.79	-12.48	499.51	
BJ	201+72.79	-12.48	499.44	
BK	201+82.79	-12.48	499.39	
CL W. Brg. Pier 4	201+88.77	-12.48	499.36	
CL Pier 4	201+89.44	-12.48	499.35	
CL Exp. Jt. Pier 4	201+90.23	-12.48	499.35	

Note:
Offsets are measured from the Profile Grade for ℄ Ramp D from Line AG to the West. Offsets are measured from the Profile Grade for ℄ WB US 150 from line AH to the East.

Note A:
Theoretical Grade Elevations Adjusted for Dead Load Deflection and Grinding will be provided to the Contractor in accordance with the special provision "Contractor Requirements for Dead Load Deflection and Top of Slab Elevation Data."

SOUTH EDGE OF MEDIAN

Location	Station	Offset	Theoretical Grade Elevations	Theoretical Grade Elevations Adjusted For Dead Load Deflection and Grinding
CL Pier 2	720+09.80	-12.00	502.90	
CL E. Brg. Pier 2	720+10.43	-12.00	502.89	
AA	720+20.41	-12.00	502.64	See Note A on sheet S24 of S214
AB	720+30.39	-12.00	502.40	
AC	720+40.37	-12.00	502.17	
AD	720+50.35	-12.00	501.95	
AE	200+02.76	-12.00	501.74	
AF	200+12.76	-12.00	501.53	
AG	200+22.76	-12.00	501.34	

CONSTRUCTION JOINT

Location	Station	Offset	Theoretical Grade Elevations	Theoretical Grade Elevations Adjusted For Dead Load Deflection and Grinding
CL Pier 2	720+09.78	-8.68	502.95	
CL E. Brg. Pier 2	720+10.40	-8.68	502.94	
AA	720+20.39	-8.61	502.69	See Note A on sheet S24 of S214
AB	720+30.38	-8.56	502.45	
AC	720+40.36	-8.53	502.22	
AD	720+50.35	-8.51	502.00	
AE	200+02.76	-8.50	501.79	
AF	200+12.76	-8.50	501.59	
AG	200+22.76	-8.50	501.39	
AH	200+32.76	-8.50	501.20	
AI	200+42.76	-8.50	501.03	
AJ	200+52.76	-8.50	500.86	
AK	200+62.76	-8.50	500.70	
CL Brg. Pier 3	200+72.60	-8.50	500.55	
BA	200+82.60	-8.50	500.40	
BB	200+92.60	-8.50	500.27	
BC	201+02.60	-8.50	500.14	
BD	201+12.60	-8.50	500.03	
BE	201+22.60	-8.50	499.92	
BF	201+32.60	-8.50	499.82	
BG	201+42.60	-8.50	499.73	
BH	201+52.60	-8.50	499.64	
BI	201+62.60	-8.50	499.57	
BJ	201+72.60	-8.50	499.51	
BK	201+82.60	-8.50	499.45	
CL W. Brg. Pier 4	201+88.77	-8.50	499.42	
CL Pier 4	201+89.44	-8.50	499.42	
CL Exp. Jt. Pier 4	201+90.23	-8.50	499.41	

GIRDER 5

Location	Station	Offset	Theoretical Grade Elevations	Theoretical Grade Elevations Adjusted For Dead Load Deflection and Grinding
CL Pier 2	720+09.74	-3.66	503.03	
CL E. Brg. Pier 2	720+10.37	-3.66	503.01	
AA	720+20.36	-3.59	502.77	See Note A on sheet S24 of S214
AB	720+30.36	-3.54	502.53	
AC	720+40.35	-3.50	502.30	
AD	720+50.34	-3.48	502.08	
AE	200+02.76	-3.48	501.87	
AF	200+12.76	-3.48	501.66	
AG	200+22.76	-3.48	501.47	
AH	200+32.76	-3.48	501.28	
AI	200+42.76	-3.48	501.10	
AJ	200+52.76	-3.48	500.93	
AK	200+62.76	-3.48	500.77	
CL Brg. Pier 3	200+72.37	-3.48	500.63	
BA	200+82.37	-3.48	500.48	
BB	200+92.37	-3.48	500.35	
BC	201+02.37	-3.48	500.22	
BD	201+12.37	-3.48	500.10	
BE	201+22.37	-3.48	500.00	
BF	201+32.37	-3.48	499.90	
BG	201+42.37	-3.48	499.80	
BH	201+52.37	-3.48	499.72	
BI	201+62.37	-3.48	499.65	
BJ	201+72.37	-3.48	499.58	
BK	201+82.37	-3.48	499.53	
CL W. Brg. Pier 4	201+88.77	-3.48	499.49	
CL Pier 4	201+89.44	-3.48	499.49	
CL Exp. Jt. Pier 4	201+90.23	-3.48	499.49	

℄ WB US 150 AND PG

Location	Station	Offset	Theoretical Grade Elevations	Theoretical Grade Elevations Adjusted For Dead Load Deflection and Grinding
CL Pier 2	720+09.71	0.00	503.08	
CL E. Brg. Pier 2	720+10.34	0.00	503.07	
AA	720+20.34	0.00	502.82	See Note A on sheet S24 of S214
AB	720+30.34	0.00	502.58	
AC	720+40.34	0.00	502.35	
AD	720+50.34	0.00	502.13	
AE	200+02.76	0.00	501.92	
AF	200+12.76	0.00	501.71	
AG	200+22.76	0.00	501.52	
AH	200+32.76	0.00	501.33	
AI	200+42.76	0.00	501.15	
AJ	200+52.76	0.00	500.98	
AK	200+62.76	0.00	500.82	
CL Brg. Pier 3	200+72.21	0.00	500.68	
BA	200+82.21	0.00	500.54	
BB	200+92.21	0.00	500.40	
BC	201+02.21	0.00	500.28	
BD	201+12.21	0.00	500.16	
BE	201+22.21	0.00	500.05	
BF	201+32.21	0.00	499.95	
BG	201+42.21	0.00	499.86	
BH	201+52.21	0.00	499.77	
BI	201+62.21	0.00	499.70	
BJ	201+72.21	0.00	499.64	
BK	201+82.21	0.00	499.58	
CL W. Brg. Pier 4	201+88.77	0.00	499.55	
CL Pier 4	201+89.44	0.00	499.54	
CL Exp. Jt. Pier 4	201+90.23	0.00	499.54	

GIRDER 6

Location	Station	Offset	Theoretical Grade Elevations	Theoretical Grade Elevations Adjusted For Dead Load Deflection and Grinding
CL Pier 2	720+09.67	5.34	503.00	
CL E. Brg. Pier 2	720+10.30	5.34	502.99	
AA	720+20.31	5.41	502.74	See Note A on sheet S24 of S214
AB	720+30.32	5.46	502.50	
AC	720+40.32	5.50	502.27	
AD	720+50.33	5.52	502.05	
AE	200+02.76	5.52	501.83	
AF	200+12.76	5.52	501.63	
AG	200+22.76	5.52	501.44	
AH	200+32.76	5.52	501.25	
AI	200+42.76	5.52	501.07	
AJ	200+52.76	5.52	500.90	
AK	200+62.76	5.52	500.74	
CL Brg. Pier 3	200+71.95	5.52	500.60	
BA	200+81.95	5.52	500.46	
BB	200+91.95	5.52	500.32	
BC	201+01.95	5.52	500.20	
BD	201+11.95	5.52	500.08	
BE	201+21.95	5.52	499.97	
BF	201+31.95	5.52	499.87	
BG	201+41.95	5.52	499.78	
BH	201+51.95	5.52	499.69	
BI	201+61.95	5.52	499.62	
BJ	201+71.95	5.52	499.55	
BK	201+81.95	5.52	499.50	
CL W. Brg. Pier 4	201+88.77	5.52	499.46	
CL Pier 4	201+89.44	5.52	499.46	
CL Exp. Jt. Pier 4	201+90.23	5.52	499.46	

GIRDER 7

Location	Station	Offset	Theoretical Grade Elevations	Theoretical Grade Elevations Adjusted For Dead Load Deflection and Grinding
CL Pier 2	720+09.61	14.34	502.85	
CL E. Brg. Pier 2	720+10.23	14.34	502.84	
AA	720+20.26	14.31	502.59	See Note A on sheet S24 of S214
AB	720+30.28	14.26	502.35	
AC	720+40.30	14.20	502.12	
AD	720+50.32	14.12	501.90	
AE	200+02.76	14.03	501.69	
AF	200+12.76	13.93	501.49	
AG	200+22.76	13.83	501.30	
AH	200+32.76	13.73	501.11	
AI	200+42.76	13.64	500.94	
AJ	200+52.76	13.54	500.77	
AK	200+62.75	13.44	500.61	
CL Brg. Pier 3	200+71.59	13.35	500.48	
BA	200+81.59	13.25	500.34	
BB	200+91.59	13.15	500.20	
BC	201+01.59	13.06	500.08	
BD	201+11.59	12.96	499.96	
BE	201+21.58	12.86	499.85	
BF	201+31.58	12.76	499.75	
BG	201+41.58	12.66	499.66	
BH	201+51.58	12.56	499.58	
BI	201+61.58	12.47	499.51	
BJ	201+71.58	12.37	499.45	
BK	201+81.58	12.27	499.39	
CL W. Brg. Pier 4	201+88.77	12.20	499.36	
CL Pier 4	201+89.44	12.19	499.35	
CL Exp. Jt. Pier 4	201+90.23	12.18	499.35	

Note:
Offsets for the south edge of median, construction joint, and Girders 5 thru 7 are measured from the Profile Grade for ℄ WB US 150.

MODEL: Default
FILE NAME: P:\4312-WBMcCluggageRehab\CADD\Structural_SN 090-0115_WBMainBridge_Final Plans\09001150-68E44-025-TOSE-Spans 4-5_03.dgn

MODJESKI and MASTERS

USER NAME =	DESIGNED - YSS	REVISED -	
	CHECKED - UB	REVISED -	
PLOT SCALE =	DRAWN - JJE	REVISED -	
PLOT DATE =	CHECKED - YSS	REVISED -	

STATE OF ILLINOIS
DEPARTMENT OF TRANSPORTATION

TOP OF SLAB ELEVATIONS - SPANS 4-5 - 3
STRUCTURE NO. 090-0115

SHEET S25 OF S214 SHEETS

F.A.P. RTE.	SECTION	COUNTY	TOTAL SHEETS	SHEET NO.
317	(15B-1)BP,BRR	PEO/TAZ	418	195

CONTRACT NO. 68E44

ILLINOIS FED. AID PROJECT

3/13/2025 12:38:38 PM

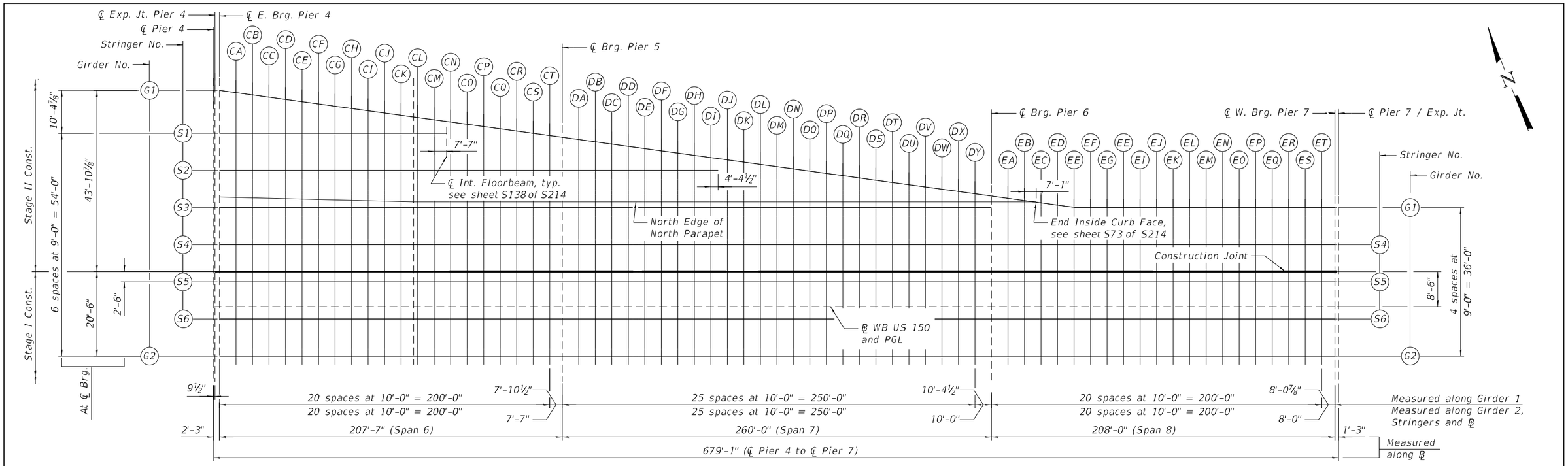

PLAN

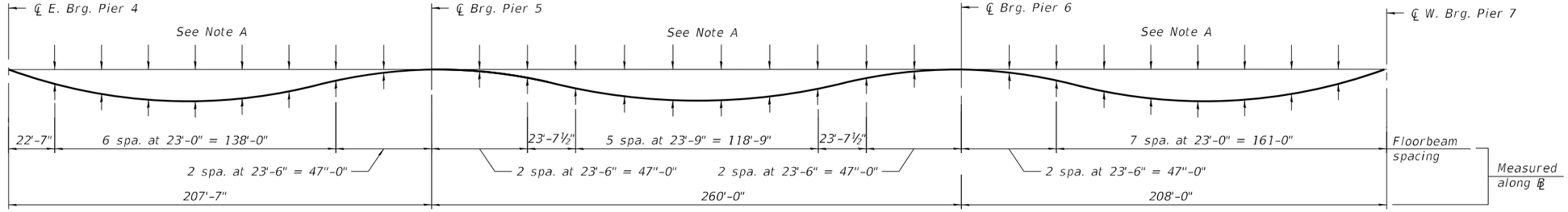

GIRDER
DEAD LOAD DEFLECTION DIAGRAM

Includes weight of concrete only.

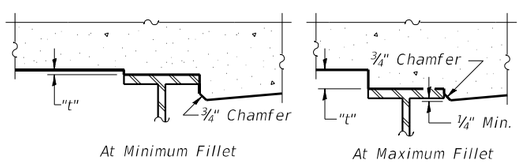

To determine "t": After all structural steel has been erected, elevations of the top flanges of the beams shall be taken at intervals shown on sheets S27 thru S30 of S214. These elevations subtracted from the "Theoretical Grade Elevations Adjusted for Dead Load Deflection and Grinding" shown on sheets S27 thru S30 of S214, minus the initial slab thickness prior to grinding, equals the fillet heights "t" above top flange of beams.

The slab is to be ground after curing to achieve smoothness, but the slab is not to be ground to elevations below the "Theoretical Grade Elevations" shown on sheets S27 thru S30 of S214. For grinding the deck, see Special Provisions.

FILLET HEIGHTS

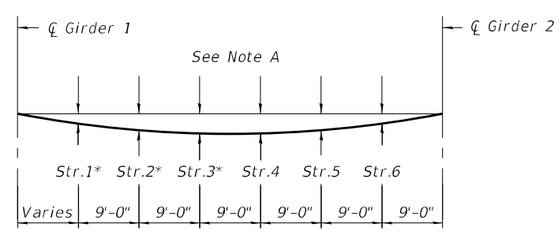

FLOORBEAM
DEAD LOAD DEFLECTION DIAGRAM

Includes weight of concrete only.

* *Str. 1, Str. 2, and Str. 3 terminate at various locations as shown on the plan view.*

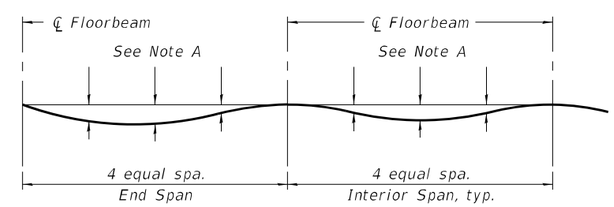

STRINGER
DEAD LOAD DEFLECTION DIAGRAM

Includes weight of concrete only.

Note:
The dead load deflections are not to be used in the field if the engineer is working from the grade elevations adjusted for dead load deflections and grinding as shown on sheets S27 thru S30 of S214.

Note A:
Dead load deflections will be provided to the Contractor in accordance with the special provision "Contractor Requirements for Dead Load Deflection and Top of Slab Elevation Data."

MODJESKI and MASTERS

USER NAME =	DESIGNED - YSS	REVISED -	
	CHECKED - UB	REVISED -	
PLOT SCALE =	DRAWN - JJE	REVISED -	
PLOT DATE =	CHECKED - YSS	REVISED -	

STATE OF ILLINOIS
DEPARTMENT OF TRANSPORTATION

TOP OF SLAB ELEVATIONS - SPANS 6-8 - 1
STRUCTURE NO. 090-0115

SHEET S26 OF S214 SHEETS

F.A.P. RTE.	SECTION	COUNTY	TOTAL SHEETS	SHEET NO.
317	(15B-1)BP,BRR	PEO/TAZ	418	196
		CONTRACT NO. 68E44		
		ILLINOIS	FED. AID PROJECT	

MODEL: PLOTSHEET-S6-S8_1
FILE NAME: P:\4312-VBM\CL\BagleRehab\CADD\Structural_SN 090-0115_WBMainBridge_Final Plans\09001115-68E44-026-TOSE-Spans 6-8_01.dgn

3/13/2025 12:39:09 PM

GIRDER 1

Location	Station	Offset	Theoretical Grade Elevations	Theoretical Grade Elevations Adjusted For Dead Load Deflection and Grinding
CL E. Brg. Pier 4	201+91.69	-52.41	499.44	
CA	202+01.68	-51.86	498.55	
CB	202+11.66	-51.31	498.40	
CC	202+21.65	-50.77	498.28	
CD	202+31.63	-50.22	498.17	
CE	202+41.62	-49.67	498.07	
CF	202+51.60	-49.13	498.02	
CG	202+61.59	-48.58	497.96	
CH	202+71.57	-48.03	497.90	
CI	202+81.56	-47.49	497.84	
CJ	202+91.54	-46.94	497.78	
CK	203+01.53	-46.39	497.76	
CL	203+11.51	-45.85	497.74	
CM	203+21.50	-45.30	497.74	
CN	203+31.48	-44.75	497.75	
CO	203+41.47	-44.21	497.77	See Note A
CP	203+51.45	-43.66	497.81	
CQ	203+61.44	-43.11	497.85	
CR	203+71.42	-42.57	497.86	
CS	203+81.41	-42.02	497.87	
CT	203+91.39	-41.48	497.89	
CL Brg. Pier 5	203+99.27	-41.04	497.93	
DA	204+09.26	-40.50	497.98	
DB	204+19.24	-39.95	498.01	
DC	204+29.23	-39.40	498.03	
DD	204+39.21	-38.86	498.04	
DE	204+49.20	-38.31	498.05	
DF	204+59.18	-37.76	498.07	
DG	204+69.17	-37.22	498.07	
DH	204+79.15	-36.67	498.05	
DI	204+89.14	-36.13	498.03	
DJ	204+99.12	-35.58	498.02	
DK	205+09.11	-35.03	498.02	
DL	205+19.09	-34.49	498.03	
DM	205+29.08	-33.94	498.05	
DN	205+39.06	-33.39	498.07	
DO	205+49.05	-32.85	498.06	
DP	205+59.03	-32.30	498.06	
DQ	205+69.02	-31.75	498.07	
DR	205+79.00	-31.21	498.12	
DS	205+88.99	-30.66	498.16	
DT	205+98.97	-30.11	498.18	
DU	206+08.96	-29.57	498.20	
DV	206+18.94	-29.02	498.23	
DW	206+28.93	-28.47	498.25	
DX	206+38.91	-27.93	498.27	
DY	206+48.90	-27.38	498.32	
CL Brg. Pier 6	206+59.27	-26.81	498.32	
EA	206+69.25	-26.26	498.33	
EB	206+79.24	-25.72	498.33	
EC	206+89.22	-25.17	498.34	
ED	206+99.21	-24.62	498.35	
EE	207+09.19	-24.07	498.36	
EF	207+19.19	-24.00	498.36	
EG	207+29.19	-24.00	498.37	
EH	207+39.19	-24.00	498.37	
EI	207+49.19	-24.00	498.37	
EJ	207+59.19	-24.00	498.37	
EK	207+69.19	-24.00	498.37	
EL	207+79.19	-24.00	498.38	
EM	207+89.19	-24.00	498.38	
EN	207+99.19	-24.00	498.38	
EO	208+09.19	-24.00	498.38	
EP	208+19.19	-24.00	498.39	
EQ	208+29.19	-24.00	498.39	
ER	208+39.19	-24.00	498.39	
ES	208+49.19	-24.00	498.39	
ET	208+59.19	-24.00	498.39	
CL W. Brg. Pier 7	208+67.27	-24.00	498.40	
CL Pier 7 / Exp. Jt.	208+68.52	-24.00	498.40	

STRINGER 1

Location	Station	Offset	Theoretical Grade Elevations	Theoretical Grade Elevations Adjusted For Dead Load Deflection and Grinding
CL E. Brg. Pier 4	201+91.69	-42.00	499.53	
CA	202+01.69	-42.00	498.76	
CB	202+11.69	-42.00	498.60	
CC	202+21.69	-42.00	498.46	
CD	202+31.69	-42.00	498.34	See Note A
CE	202+41.69	-42.00	498.23	
CF	202+51.69	-42.00	498.17	
CG	202+61.69	-42.00	498.10	
CH	202+71.69	-42.00	498.02	
CI	202+81.69	-42.00	497.95	
CJ	202+91.69	-42.00	497.89	
CK	203+01.69	-42.00	497.86	
CL	203+11.69	-42.00	497.82	
CM	203+21.69	-42.00	497.81	
CL Int. Floorbeam	203+29.27	-42.00	497.82	

STRINGER 2

Location	Station	Offset	Theoretical Grade Elevations	Theoretical Grade Elevations Adjusted For Dead Load Deflection and Grinding
CL E. Brg. Pier 4	201+91.69	-33.00	499.10	
CA	202+01.69	-33.00	498.90	
CB	202+11.69	-33.00	498.84	
CC	202+21.69	-33.00	498.79	
CD	202+31.69	-33.00	498.74	
CE	202+41.69	-33.00	498.69	
CF	202+51.69	-33.00	498.65	
CG	202+61.69	-33.00	498.62	
CH	202+71.69	-33.00	498.57	
CI	202+81.69	-33.00	498.53	
CJ	202+91.69	-33.00	498.49	
CK	203+01.69	-33.00	498.47	See Note A
CL	203+11.69	-33.00	498.43	
CM	203+21.69	-33.00	498.42	
CN	203+31.69	-33.00	498.45	
CO	203+41.69	-33.00	498.44	
CP	203+51.69	-33.00	498.43	
CQ	203+61.69	-33.00	498.42	
CR	203+71.69	-33.00	498.41	
CS	203+81.69	-33.00	498.39	
CT	203+91.69	-33.00	498.38	
CL Brg. Pier 5	203+99.27	-33.00	498.38	
DA	204+09.27	-33.00	498.38	
DB	204+19.27	-33.00	498.37	
DC	204+29.27	-33.00	498.36	
DD	204+39.27	-33.00	498.34	
DE	204+49.27	-33.00	498.33	
DF	204+59.27	-33.00	498.32	
DG	204+69.27	-33.00	498.29	
DH	204+79.27	-33.00	498.26	
DI	204+89.27	-33.00	498.22	
CL Int. Floorbeam	204+93.65	-33.00	498.21	

Note A:
Theoretical Grade Elevations Adjusted for Dead Load Deflection and Grinding will be provided to the Contractor in accordance with the special provision "Contractor Requirements for Dead Load Deflection and Top of Slab Elevation Data."

MODEL: Default
FILE NAME: P:\4312-VBM\CLugageRehab\CADD\Structural_SN 090-0115_WBMainBridge_Final Plans\0900115-68E44-027-TOSE-Spans 6-8_02.dgn

MODJESKI and MASTERS

USER NAME =	DESIGNED - YSS	REVISED -
	CHECKED - UB	REVISED -
PLOT SCALE =	DRAWN - JJE	REVISED -
PLOT DATE =	CHECKED - YSS	REVISED -

STATE OF ILLINOIS
DEPARTMENT OF TRANSPORTATION

TOP OF SLAB ELEVATIONS - SPANS 6-8 - 2
STRUCTURE NO. 090-0115

SHEET S27 OF S214 SHEETS

F.A.P. RTE.	SECTION	COUNTY	TOTAL SHEETS	SHEET NO.
317	(15B-1)BP,BRR	PEO/TAZ	418	197

CONTRACT NO. 68E44

ILLINOIS | FED. AID PROJECT

3/13/2025 12:39:12 PM

NORTH EDGE OF NORTH PARAPET

Location	Station	Offset	Theoretical Grade Elevations	Theoretical Grade Elevations Adjusted For Dead Load Deflection and Grinding
CL E. Brg. Pier 4	201+91.69	-30.45	498.98	
CA	202+01.69	-30.20	498.95	
CB	202+11.68	-29.95	498.92	
CC	202+21.68	-29.70	498.91	
CD	202+31.68	-29.45	498.89	See Note A
CE	202+41.67	-29.20	498.88	
CF	202+51.67	-28.95	498.87	
CG	202+61.67	-28.69	498.86	
CH	202+71.66	-28.44	498.85	
CI	202+81.66	-28.19	498.84	
CJ	202+91.66	-27.94	498.83	
CK	203+01.66	-27.69	498.82	
CL	203+11.65	-27.50	498.81	
CM	203+21.65	-27.50	498.80	
CN	203+31.65	-27.50	498.78	
CO	203+41.65	-27.50	498.77	
CP	203+51.65	-27.50	498.75	
CQ	203+61.65	-27.50	498.73	
CR	203+71.65	-27.50	498.72	
CS	203+81.65	-27.50	498.70	
CT	203+91.65	-27.50	498.69	
CL Brg. Pier 5	203+99.27	-27.50	498.68	
DA	204+09.27	-27.50	498.66	
DB	204+19.27	-27.50	498.65	
DC	204+29.27	-27.50	498.63	
DD	204+39.27	-27.50	498.62	
DE	204+49.27	-27.50	498.60	
DF	204+59.27	-27.50	498.59	
DG	204+69.27	-27.50	498.57	
DH	204+79.27	-27.50	498.55	
DI	204+89.27	-27.50	498.54	
DJ	204+99.27	-27.50	498.52	
DK	205+09.27	-27.50	498.51	
DL	205+19.27	-27.50	498.49	
DM	205+29.27	-27.50	498.48	
DN	205+39.27	-27.50	498.46	
DO	205+49.27	-27.50	498.45	
DP	205+59.27	-27.50	498.43	
DQ	205+69.27	-27.50	498.42	
DR	205+79.27	-27.50	498.40	
DS	205+89.27	-27.50	498.39	
DT	205+99.27	-27.50	498.37	
DU	206+09.27	-27.50	498.36	
DV	206+19.27	-27.50	498.35	
DW	206+29.27	-27.50	498.33	
DX	206+39.27	-27.50	498.33	
DY	206+49.27	-27.50	498.32	
CL Brg. Pier 6	206+59.27	-27.50	498.31	
EA	206+69.27	-27.50	498.30	
EB	206+79.27	-27.50	498.30	
End Inside Curb Face	206+86.35	-27.50	498.30	

STRINGER 3

Location	Station	Offset	Theoretical Grade Elevations	Theoretical Grade Elevations Adjusted For Dead Load Deflection and Grinding
CL E. Brg. Pier 4	201+91.69	-24.00	499.11	
CA	202+01.69	-24.00	499.07	
CB	202+11.69	-24.00	499.04	
CC	202+21.69	-24.00	499.02	
CD	202+31.69	-24.00	499.00	See Note A
CE	202+41.69	-24.00	498.99	
CF	202+51.69	-24.00	498.97	
CG	202+61.69	-24.00	498.96	
CH	202+71.69	-24.00	498.94	
CI	202+81.69	-24.00	498.93	
CJ	202+91.69	-24.00	498.91	
CK	203+01.69	-24.00	498.90	
CL	203+11.69	-24.00	498.88	
CM	203+21.69	-24.00	498.87	
CN	203+31.69	-24.00	498.85	
CO	203+41.69	-24.00	498.84	
CP	203+51.69	-24.00	498.82	
CQ	203+61.69	-24.00	498.80	
CR	203+71.69	-24.00	498.79	
CS	203+81.69	-24.00	498.77	
CT	203+91.69	-24.00	498.76	
CL Brg. Pier 5	203+99.27	-24.00	498.75	
DA	204+09.27	-24.00	498.73	
DB	204+19.27	-24.00	498.72	
DC	204+29.27	-24.00	498.70	
DD	204+39.27	-24.00	498.69	
DE	204+49.27	-24.00	498.67	
DF	204+59.27	-24.00	498.66	
DG	204+69.27	-24.00	498.64	
DH	204+79.27	-24.00	498.62	
DI	204+89.27	-24.00	498.61	
DJ	204+99.27	-24.00	498.59	
DK	205+09.27	-24.00	498.58	
DL	205+19.27	-24.00	498.56	
DM	205+29.27	-24.00	498.55	
DN	205+39.27	-24.00	498.53	
DO	205+49.27	-24.00	498.52	
DP	205+59.27	-24.00	498.50	
DQ	205+69.27	-24.00	498.49	
DR	205+79.27	-24.00	498.47	
DS	205+89.27	-24.00	498.46	
DT	205+99.27	-24.00	498.44	
DU	206+09.27	-24.00	498.43	
DV	206+19.27	-24.00	498.42	
DW	206+29.27	-24.00	498.40	
DX	206+39.27	-24.00	498.40	
DY	206+49.27	-24.00	498.39	
CL Brg. Pier 6	206+59.27	-24.00	498.38	

STRINGER 4

Location	Station	Offset	Theoretical Grade Elevations	Theoretical Grade Elevations Adjusted For Dead Load Deflection and Grinding
CL E. Brg. Pier 4	201+91.69	-15.00	499.29	
CA	202+01.69	-15.00	499.25	
CB	202+11.69	-15.00	499.22	
CC	202+21.69	-15.00	499.20	
CD	202+31.69	-15.00	499.18	See Note A
CE	202+41.69	-15.00	499.17	
CF	202+51.69	-15.00	499.15	
CG	202+61.69	-15.00	499.14	
CH	202+71.69	-15.00	499.12	
CI	202+81.69	-15.00	499.11	
CJ	202+91.69	-15.00	499.09	
CK	203+01.69	-15.00	499.08	
CL	203+11.69	-15.00	499.06	
CM	203+21.69	-15.00	499.05	
CN	203+31.69	-15.00	499.03	
CO	203+41.69	-15.00	499.02	
CP	203+51.69	-15.00	499.00	
CQ	203+61.69	-15.00	498.98	
CR	203+71.69	-15.00	498.97	
CS	203+81.69	-15.00	498.95	
CT	203+91.69	-15.00	498.94	
CL Brg. Pier 5	203+99.27	-15.00	498.93	
DA	204+09.27	-15.00	498.91	
DB	204+19.27	-15.00	498.90	
DC	204+29.27	-15.00	498.88	
DD	204+39.27	-15.00	498.87	
DE	204+49.27	-15.00	498.85	
DF	204+59.27	-15.00	498.84	
DG	204+69.27	-15.00	498.82	
DH	204+79.27	-15.00	498.80	
DI	204+89.27	-15.00	498.79	
DJ	204+99.27	-15.00	498.77	
DK	205+09.27	-15.00	498.76	
DL	205+19.27	-15.00	498.74	
DM	205+29.27	-15.00	498.73	
DN	205+39.27	-15.00	498.71	
DO	205+49.27	-15.00	498.70	
DP	205+59.27	-15.00	498.68	
DQ	205+69.27	-15.00	498.67	
DR	205+79.27	-15.00	498.65	
DS	205+89.27	-15.00	498.64	
DT	205+99.27	-15.00	498.62	
DU	206+09.27	-15.00	498.61	
DV	206+19.27	-15.00	498.60	
DW	206+29.27	-15.00	498.58	
DX	206+39.27	-15.00	498.58	
DY	206+49.27	-15.00	498.57	
CL Brg. Pier 6	206+59.27	-15.00	498.56	
EA	206+69.27	-15.00	498.55	
EB	206+79.27	-15.00	498.55	
EC	206+89.27	-15.00	498.55	
ED	206+99.27	-15.00	498.54	
EE	207+09.27	-15.00	498.54	
EF	207+19.27	-15.00	498.54	
EG	207+29.27	-15.00	498.55	
EH	207+39.27	-15.00	498.55	
EI	207+49.27	-15.00	498.55	
EJ	207+59.27	-15.00	498.55	
EK	207+69.27	-15.00	498.55	
EL	207+79.27	-15.00	498.56	
EM	207+89.27	-15.00	498.56	
EN	207+99.27	-15.00	498.56	
EO	208+09.27	-15.00	498.56	
EP	208+19.27	-15.00	498.57	
EQ	208+29.27	-15.00	498.57	
ER	208+39.27	-15.00	498.57	
ES	208+49.27	-15.00	498.57	
ET	208+59.27	-15.00	498.57	
CL W. Brg. Pier 7	208+67.27	-15.00	498.58	
CL Pier 7 / Exp. Jt.	208+68.52	-15.00	498.58	

Note A:
Theoretical Grade Elevations Adjusted for Dead Load Deflection and Grinding will be provided to the Contractor in accordance with the special provision "Contractor Requirements for Dead Load Deflection and Top of Slab Elevation Data."

CONSTRUCTION JOINT

Location	Station	Offset	Theoretical Grade Elevations	Theoretical Grade Elevations Adjusted For Dead Load Deflection and Grinding
CL E. Brg. Pier 4	201+91.69	-8.50	499.41	
CA	202+01.69	-8.50	499.37	
CB	202+11.69	-8.50	499.33	
CC	202+21.69	-8.50	499.31	
CD	202+31.69	-8.50	499.30	
CE	202+41.69	-8.50	499.28	
CF	202+51.69	-8.50	499.27	See Note A
CG	202+61.69	-8.50	499.25	
CH	202+71.69	-8.50	499.23	
CI	202+81.69	-8.50	499.22	
CJ	202+91.69	-8.50	499.20	
CK	203+01.69	-8.50	499.19	
CL	203+11.69	-8.50	499.17	
CM	203+21.69	-8.50	499.16	
CN	203+31.69	-8.50	499.14	
CO	203+41.69	-8.50	499.13	
CP	203+51.69	-8.50	499.11	
CQ	203+61.69	-8.50	499.10	
CR	203+71.69	-8.50	499.08	
CS	203+81.69	-8.50	499.07	
CT	203+91.69	-8.50	499.05	
CL Brg. Pier 5	203+99.27	-8.50	499.04	
DA	204+09.27	-8.50	499.02	
DB	204+19.27	-8.50	499.01	
DC	204+29.27	-8.50	498.99	
DD	204+39.27	-8.50	498.98	
DE	204+49.27	-8.50	498.96	
DF	204+59.27	-8.50	498.95	
DG	204+69.27	-8.50	498.93	
DH	204+79.27	-8.50	498.92	
DI	204+89.27	-8.50	498.90	
DJ	204+99.27	-8.50	498.89	
DK	205+09.27	-8.50	498.87	
DL	205+19.27	-8.50	498.86	
DM	205+29.27	-8.50	498.84	
DN	205+39.27	-8.50	498.83	
DO	205+49.27	-8.50	498.81	
DP	205+59.27	-8.50	498.80	
DQ	205+69.27	-8.50	498.78	
DR	205+79.27	-8.50	498.76	
DS	205+89.27	-8.50	498.75	
DT	205+99.27	-8.50	498.73	
DU	206+09.27	-8.50	498.72	
DV	206+19.27	-8.50	498.71	
DW	206+29.27	-8.50	498.70	
DX	206+39.27	-8.50	498.69	
DY	206+49.27	-8.50	498.68	
CL Brg. Pier 6	206+59.27	-8.50	498.67	
EA	206+69.27	-8.50	498.67	
EB	206+79.27	-8.50	498.66	
EC	206+89.27	-8.50	498.66	
ED	206+99.27	-8.50	498.66	
EE	207+09.27	-8.50	498.66	
EF	207+19.27	-8.50	498.66	
EG	207+29.27	-8.50	498.66	
EH	207+39.27	-8.50	498.66	
EI	207+49.27	-8.50	498.66	
EJ	207+59.27	-8.50	498.66	
EK	207+69.27	-8.50	498.67	
EL	207+79.27	-8.50	498.67	
EM	207+89.27	-8.50	498.67	
EN	207+99.27	-8.50	498.67	
EO	208+09.27	-8.50	498.68	
EP	208+19.27	-8.50	498.68	
EQ	208+29.27	-8.50	498.68	
ER	208+39.27	-8.50	498.68	
ES	208+49.27	-8.50	498.68	
ET	208+59.27	-8.50	498.69	
CL W. Brg. Pier 7	208+67.27	-8.50	498.69	
CL Pier 7 / Exp. Jt.	208+68.52		498.69	

STRINGER 5

Location	Station	Offset	Theoretical Grade Elevations	Theoretical Grade Elevations Adjusted For Dead Load Deflection and Grinding
CL E. Brg. Pier 4	201+91.69	-6.00	499.44	
CA	202+01.69	-6.00	499.40	
CB	202+11.69	-6.00	499.37	
CC	202+21.69	-6.00	499.35	
CD	202+31.69	-6.00	499.33	
CE	202+41.69	-6.00	499.32	
CF	202+51.69	-6.00	499.30	See Note A
CG	202+61.69	-6.00	499.29	
CH	202+71.69	-6.00	499.27	
CI	202+81.69	-6.00	499.26	
CJ	202+91.69	-6.00	499.24	
CK	203+01.69	-6.00	499.23	
CL	203+11.69	-6.00	499.21	
CM	203+21.69	-6.00	499.20	
CN	203+31.69	-6.00	499.18	
CO	203+41.69	-6.00	499.17	
CP	203+51.69	-6.00	499.15	
CQ	203+61.69	-6.00	499.13	
CR	203+71.69	-6.00	499.12	
CS	203+81.69	-6.00	499.10	
CT	203+91.69	-6.00	499.09	
CL Brg. Pier 5	203+99.27	-6.00	499.08	
DA	204+09.27	-6.00	499.06	
DB	204+19.27	-6.00	499.05	
DC	204+29.27	-6.00	499.03	
DD	204+39.27	-6.00	499.02	
DE	204+49.27	-6.00	499.00	
DF	204+59.27	-6.00	498.99	
DG	204+69.27	-6.00	498.97	
DH	204+79.27	-6.00	498.95	
DI	204+89.27	-6.00	498.94	
DJ	204+99.27	-6.00	498.92	
DK	205+09.27	-6.00	498.91	
DL	205+19.27	-6.00	498.89	
DM	205+29.27	-6.00	498.88	
DN	205+39.27	-6.00	498.86	
DO	205+49.27	-6.00	498.85	
DP	205+59.27	-6.00	498.83	
DQ	205+69.27	-6.00	498.82	
DR	205+79.27	-6.00	498.80	
DS	205+89.27	-6.00	498.79	
DT	205+99.27	-6.00	498.77	
DU	206+09.27	-6.00	498.76	
DV	206+19.27	-6.00	498.75	
DW	206+29.27	-6.00	498.73	
DX	206+39.27	-6.00	498.73	
DY	206+49.27	-6.00	498.72	
CL Brg. Pier 6	206+59.27	-6.00	498.71	
EA	206+69.27	-6.00	498.70	
EB	206+79.27	-6.00	498.70	
EC	206+89.27	-6.00	498.70	
ED	206+99.27	-6.00	498.69	
EE	207+09.27	-6.00	498.69	
EF	207+19.27	-6.00	498.69	
EG	207+29.27	-6.00	498.70	
EH	207+39.27	-6.00	498.70	
EI	207+49.27	-6.00	498.70	
EJ	207+59.27	-6.00	498.70	
EK	207+69.27	-6.00	498.70	
EL	207+79.27	-6.00	498.71	
EM	207+89.27	-6.00	498.71	
EN	207+99.27	-6.00	498.71	
EO	208+09.27	-6.00	498.71	
EP	208+19.27	-6.00	498.72	
EQ	208+29.27	-6.00	498.72	
ER	208+39.27	-6.00	498.72	
ES	208+49.27	-6.00	498.72	
ET	208+59.27	-6.00	498.72	
CL W. Brg. Pier 7	208+67.27	-6.00	498.73	
CL Pier 7 / Exp. Jt.	208+68.52	-6.00	498.73	

℄ WB US 150 AND PG

Location	Station	Offset	Theoretical Grade Elevations	Theoretical Grade Elevations Adjusted For Dead Load Deflection and Grinding
CL E. Brg. Pier 4	201+91.69	0.00	499.53	
CA	202+01.69	0.00	499.49	
CB	202+11.69	0.00	499.46	
CC	202+21.69	0.00	499.44	
CD	202+31.69	0.00	499.42	
CE	202+41.69	0.00	499.41	
CF	202+51.69	0.00	499.39	See Note A
CG	202+61.69	0.00	499.38	
CH	202+71.69	0.00	499.36	
CI	202+81.69	0.00	499.35	
CJ	202+91.69	0.00	499.33	
CK	203+01.69	0.00	499.32	
CL	203+11.69	0.00	499.30	
CM	203+21.69	0.00	499.29	
CN	203+31.69	0.00	499.27	
CO	203+41.69	0.00	499.26	
CP	203+51.69	0.00	499.24	
CQ	203+61.69	0.00	499.22	
CR	203+71.69	0.00	499.21	
CS	203+81.69	0.00	499.19	
CT	203+91.69	0.00	499.18	
CL Brg. Pier 5	203+99.27	0.00	499.17	
DA	204+09.27	0.00	499.15	
DB	204+19.27	0.00	499.14	
DC	204+29.27	0.00	499.12	
DD	204+39.27	0.00	499.11	
DE	204+49.27	0.00	499.09	
DF	204+59.27	0.00	499.08	
DG	204+69.27	0.00	499.06	
DH	204+79.27	0.00	499.04	
DI	204+89.27	0.00	499.03	
DJ	204+99.27	0.00	499.01	
DK	205+09.27	0.00	499.00	
DL	205+19.27	0.00	498.98	
DM	205+29.27	0.00	498.97	
DN	205+39.27	0.00	498.95	
DO	205+49.27	0.00	498.94	
DP	205+59.27	0.00	498.92	
DQ	205+69.27	0.00	498.91	
DR	205+79.27	0.00	498.89	
DS	205+89.27	0.00	498.88	
DT	205+99.27	0.00	498.86	
DU	206+09.27	0.00	498.85	
DV	206+19.27	0.00	498.84	
DW	206+29.27	0.00	498.82	
DX	206+39.27	0.00	498.82	
DY	206+49.27	0.00	498.81	
CL Brg. Pier 6	206+59.27	0.00	498.80	
EA	206+69.27	0.00	498.79	
EB	206+79.27	0.00	498.79	
EC	206+89.27	0.00	498.79	
ED	206+99.27	0.00	498.78	
EE	207+09.27	0.00	498.78	
EF	207+19.27	0.00	498.78	
EG	207+29.27	0.00	498.79	
EH	207+39.27	0.00	498.79	
EI	207+49.27	0.00	498.79	
EJ	207+59.27	0.00	498.79	
EK	207+69.27	0.00	498.79	
EL	207+79.27	0.00	498.80	
EM	207+89.27	0.00	498.80	
EN	207+99.27	0.00	498.80	
EO	208+09.27	0.00	498.80	
EP	208+19.27	0.00	498.81	
EQ	208+29.27	0.00	498.81	
ER	208+39.27	0.00	498.81	
ES	208+49.27	0.00	498.81	
ET	208+59.27	0.00	498.81	
CL W. Brg. Pier 7	208+67.27	0.00	498.82	
CL Pier 7 / Exp. Jt.	208+68.52	0.00	498.82	

Note A:
Theoretical Grade Elevations Adjusted for Dead Load Deflection and Grinding will be provided to the Contractor in accordance with the special provision "Contractor Requirements for Dead Load Deflection and Top of Slab Elevation Data."

STRINGER 6

Location	Station	Offset	Theoretical Grade Elevations	Theoretical Grade Elevations Adjusted For Dead Load Deflection and Grinding
CL E. Brg. Pier 4	201+91.69	3.00	499.49	
CA	202+01.69	3.00	499.45	
CB	202+11.69	3.00	499.42	
CC	202+21.69	3.00	499.39	
CD	202+31.69	3.00	499.38	
CE	202+41.69	3.00	499.36	
CF	202+51.69	3.00	499.35	See Note A
CG	202+61.69	3.00	499.33	
CH	202+71.69	3.00	499.32	
CI	202+81.69	3.00	499.30	
CJ	202+91.69	3.00	499.29	
CK	203+01.69	3.00	499.27	
CL	203+11.69	3.00	499.26	
CM	203+21.69	3.00	499.24	
CN	203+31.69	3.00	499.23	
CO	203+41.69	3.00	499.21	
CP	203+51.69	3.00	499.19	
CQ	203+61.69	3.00	499.18	
CR	203+71.69	3.00	499.16	
CS	203+81.69	3.00	499.15	
CT	203+91.69	3.00	499.13	
CL Brg. Pier 5	203+99.27	3.00	499.12	
DA	204+09.27	3.00	499.11	
DB	204+19.27	3.00	499.09	
DC	204+29.27	3.00	499.08	
DD	204+39.27	3.00	499.06	
DE	204+49.27	3.00	499.05	
DF	204+59.27	3.00	499.03	
DG	204+69.27	3.00	499.02	
DH	204+79.27	3.00	499.00	
DI	204+89.27	3.00	498.98	
DJ	204+99.27	3.00	498.97	
DK	205+09.27	3.00	498.95	
DL	205+19.27	3.00	498.94	
DM	205+29.27	3.00	498.92	
DN	205+39.27	3.00	498.91	
DO	205+49.27	3.00	498.89	
DP	205+59.27	3.00	498.88	
DQ	205+69.27	3.00	498.86	
DR	205+79.27	3.00	498.85	
DS	205+89.27	3.00	498.83	
DT	205+99.27	3.00	498.82	
DU	206+09.27	3.00	498.80	
DV	206+19.27	3.00	498.79	
DW	206+29.27	3.00	498.78	
DX	206+39.27	3.00	498.77	
DY	206+49.27	3.00	498.76	
CL Brg. Pier 6	206+59.27	3.00	498.75	
EA	206+69.27	3.00	498.75	
EB	206+79.27	3.00	498.74	
EC	206+89.27	3.00	498.74	
ED	206+99.27	3.00	498.74	
EE	207+09.27	3.00	498.74	
EF	207+19.27	3.00	498.74	
EG	207+29.27	3.00	498.74	
EH	207+39.27	3.00	498.74	
EI	207+49.27	3.00	498.74	
EJ	207+59.27	3.00	498.75	
EK	207+69.27	3.00	498.75	
EL	207+79.27	3.00	498.75	
EM	207+89.27	3.00	498.75	
EN	207+99.27	3.00	498.76	
EO	208+09.27	3.00	498.76	
EP	208+19.27	3.00	498.76	
EQ	208+29.27	3.00	498.76	
ER	208+39.27	3.00	498.76	
ES	208+49.27	3.00	498.77	
ET	208+59.27	3.00	498.77	
CL W. Brg. Pier 7	208+67.27	3.00	498.77	
CL Pier 7 / Exp. Jt.	208+68.52	3.00	498.77	

GIRDER 2

Location	Station	Offset	Theoretical Grade Elevations	Theoretical Grade Elevations Adjusted For Dead Load Deflection and Grinding
CL E. Brg. Pier 4	201+91.69	12.00	499.35	
CA	202+01.69	12.00	499.31	
CB	202+11.69	12.00	499.28	
CC	202+21.69	12.00	499.25	
CD	202+31.69	12.00	499.24	
CE	202+41.69	12.00	499.22	
CF	202+51.69	12.00	499.21	See Note A
CG	202+61.69	12.00	499.19	
CH	202+71.69	12.00	499.18	
CI	202+81.69	12.00	499.16	
CJ	202+91.69	12.00	499.15	
CK	203+01.69	12.00	499.13	
CL	203+11.69	12.00	499.12	
CM	203+21.69	12.00	499.10	
CN	203+31.69	12.00	499.09	
CO	203+41.69	12.00	499.07	
CP	203+51.69	12.00	499.05	
CQ	203+61.69	12.00	499.04	
CR	203+71.69	12.00	499.02	
CS	203+81.69	12.00	499.01	
CT	203+91.69	12.00	498.99	
CL Brg. Pier 5	203+99.27	12.00	498.98	
DA	204+09.27	12.00	498.97	
DB	204+19.27	12.00	498.95	
DC	204+29.27	12.00	498.94	
DD	204+39.27	12.00	498.92	
DE	204+49.27	12.00	498.91	
DF	204+59.27	12.00	498.89	
DG	204+69.27	12.00	498.88	
DH	204+79.27	12.00	498.86	
DI	204+89.27	12.00	498.84	
DJ	204+99.27	12.00	498.83	
DK	205+09.27	12.00	498.81	
DL	205+19.27	12.00	498.80	
DM	205+29.27	12.00	498.78	
DN	205+39.27	12.00	498.77	
DO	205+49.27	12.00	498.75	
DP	205+59.27	12.00	498.74	
DQ	205+69.27	12.00	498.72	
DR	205+79.27	12.00	498.71	
DS	205+89.27	12.00	498.69	
DT	205+99.27	12.00	498.68	
DU	206+09.27	12.00	498.66	
DV	206+19.27	12.00	498.65	
DW	206+29.27	12.00	498.64	
DX	206+39.27	12.00	498.63	
DY	206+49.27	12.00	498.62	
CL Brg. Pier 6	206+59.27	12.00	498.61	
EA	206+69.27	12.00	498.61	
EB	206+79.27	12.00	498.60	
EC	206+89.27	12.00	498.60	
ED	206+99.27	12.00	498.60	
EE	207+09.27	12.00	498.60	
EF	207+19.27	12.00	498.60	
EG	207+29.27	12.00	498.60	
EH	207+39.27	12.00	498.60	
EI	207+49.27	12.00	498.60	
EJ	207+59.27	12.00	498.61	
EK	207+69.27	12.00	498.61	
EL	207+79.27	12.00	498.61	
EM	207+89.27	12.00	498.61	
EN	207+99.27	12.00	498.62	
EO	208+09.27	12.00	498.62	
EP	208+19.27	12.00	498.62	
EQ	208+29.27	12.00	498.62	
ER	208+39.27	12.00	498.62	
ES	208+49.27	12.00	498.63	
ET	208+59.27	12.00	498.63	
CL W. Brg. Pier 7	208+67.27	12.00	498.63	
CL Pier 7 / Exp. Jt.	208+68.52	12.00	498.63	

Note A:
Theoretical Grade Elevations Adjusted for Dead Load Deflection and Grinding will be provided to the Contractor in accordance with the special provision "Contractor Requirements for Dead Load Deflection and Top of Slab Elevation Data."