Route No.	SECTION	COUNTY	TOTAL SHEETS	SHEET NO.
		Rock Island	112	37
Sta. 200+00		To Sta. 205+00		
FED. ROAD DIST. NO. 7		ILLINOIS		

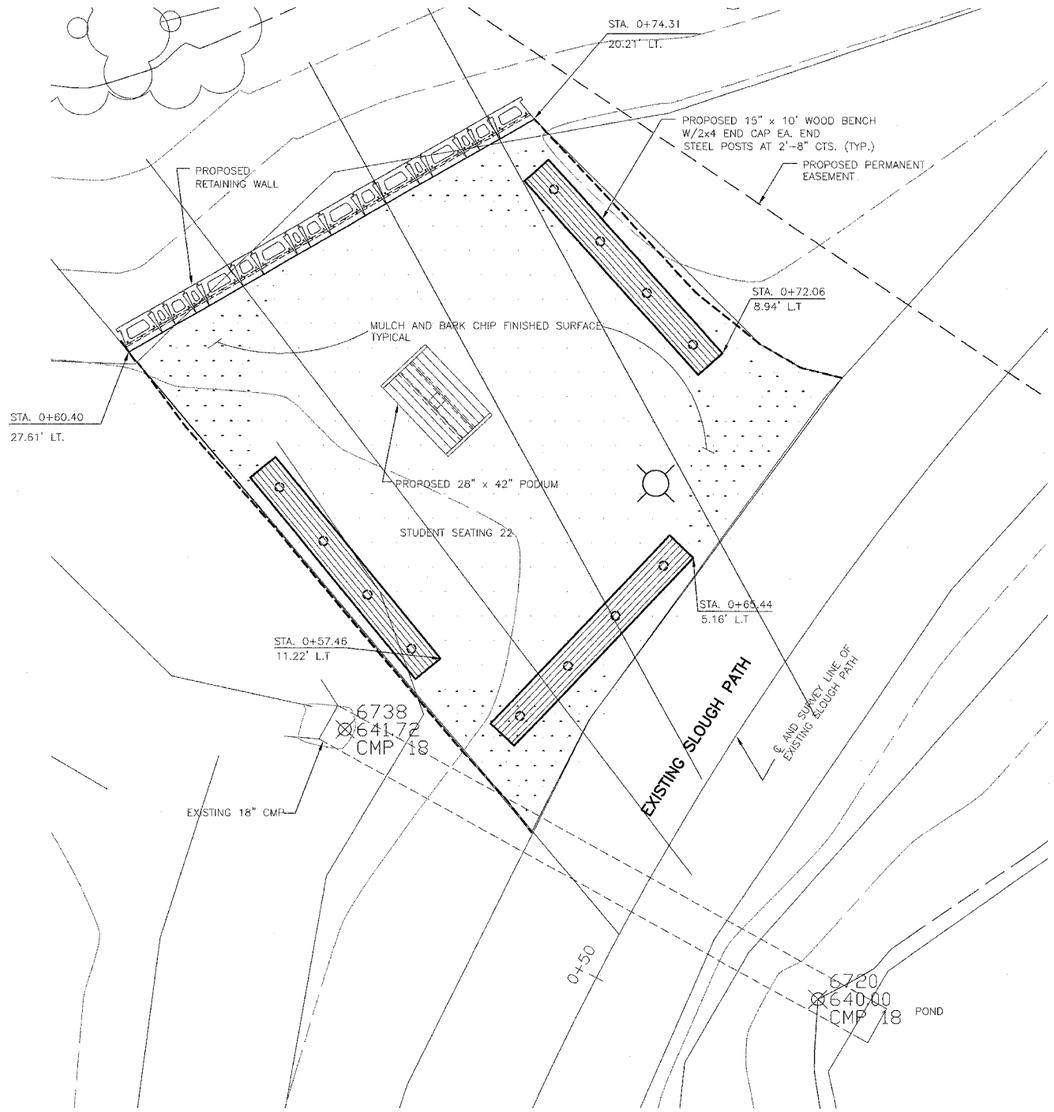

PLAN

SCALE 3/8"=1'-0"

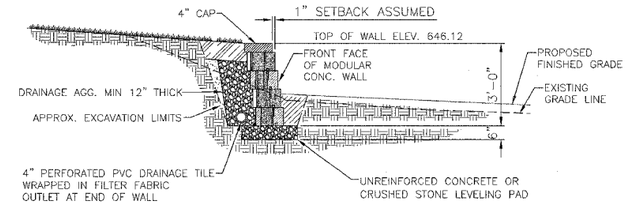

RETAINING WALL DESCRIPTION

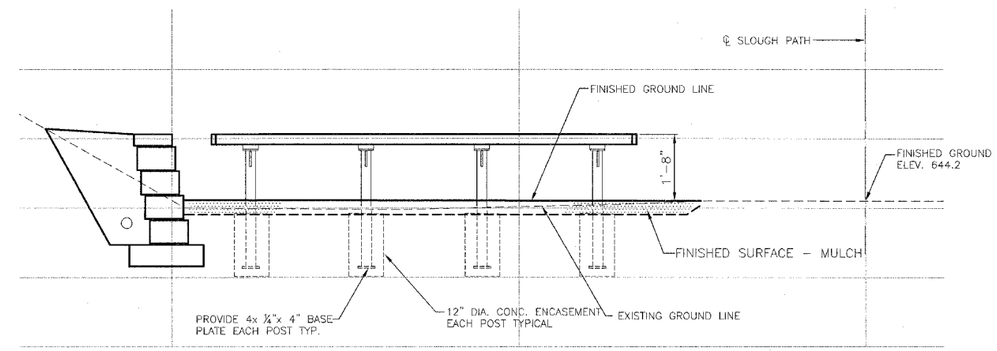

WOOD BENCH ELEVATION

NTS

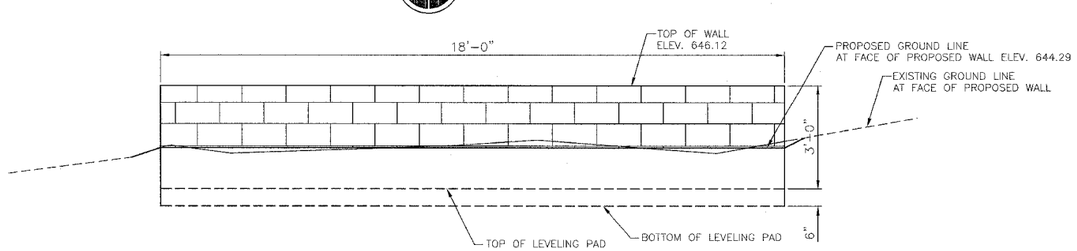

ELEVATION

SCALE 1/2"=1'-0"

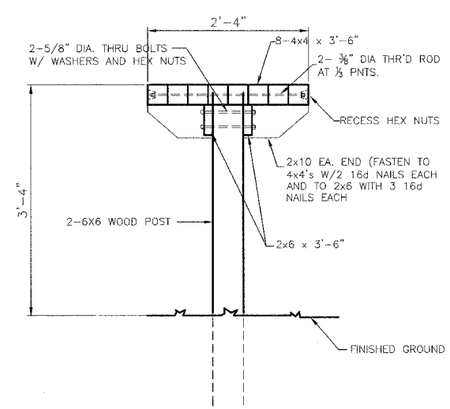

PODIUM SECTION

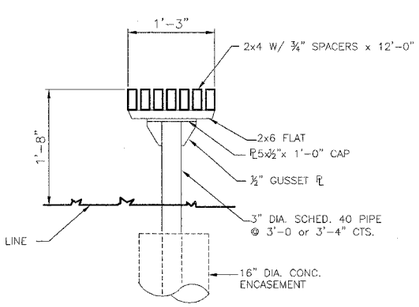

BENCH SECTION

BILL OF MATERIAL

SEGMENTAL CONCRETE BLOCK WALL	SQ. FT	54
WOOD CHIP MULCH, 4"	SQ. YD	40
BENCHES	EACH	3

DESIGNED	MHM
CHECKED	JBF
DRAWN	RAP
CHECKED	JBF

NATURE TRAIL PROPOSED OUTDOOR CLASSROOM LAYOUT AND DETAILS