WITNESS MARKER FOR PERMANENT SURVEY MARKERS, TYPE II

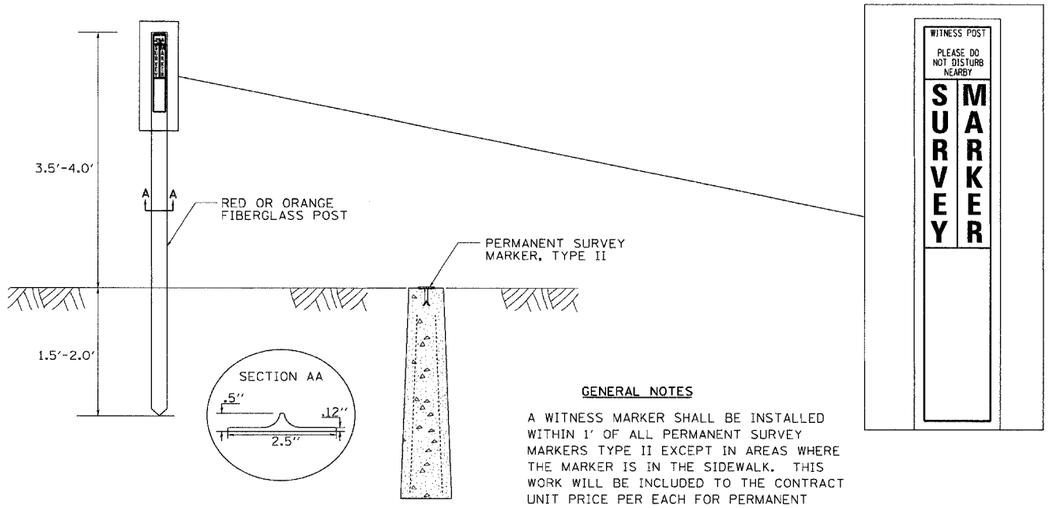

GENERAL NOTES

A WITNESS MARKER SHALL BE INSTALLED WITHIN 1' OF ALL PERMANENT SURVEY MARKERS TYPE II EXCEPT IN AREAS WHERE THE MARKER IS IN THE SIDEWALK. THIS WORK WILL BE INCLUDED TO THE CONTRACT UNIT PRICE PER EACH FOR PERMANENT SURVEY MARKERS, TYPE II.

PERMANENT SURVEY MARKERS, TYPE II

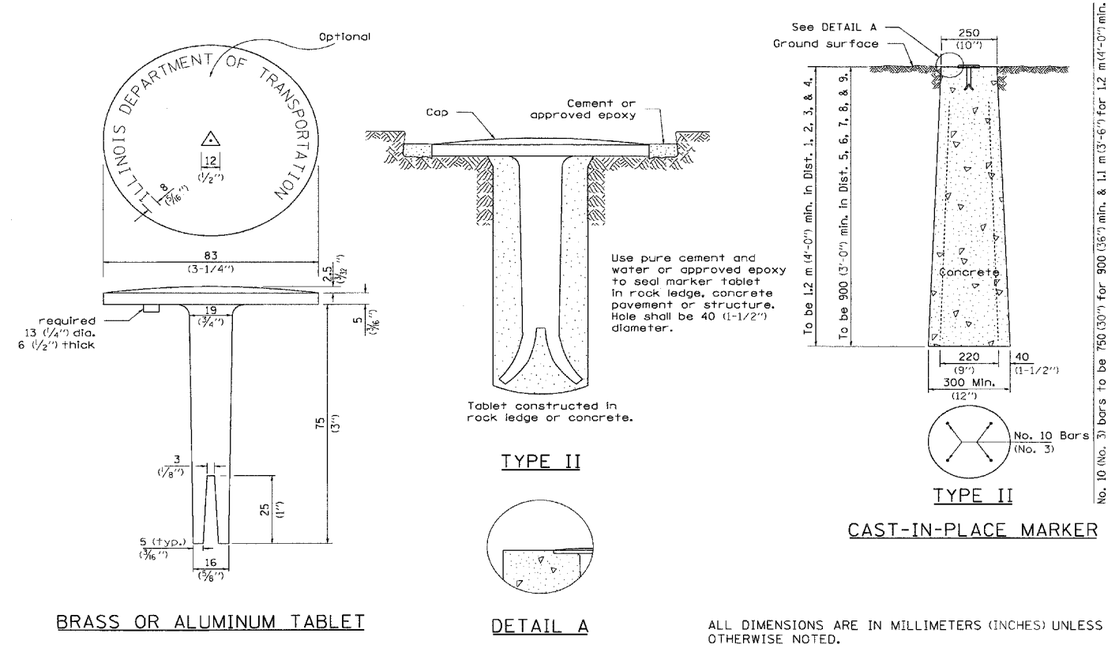

ALL DIMENSIONS ARE IN MILLIMETERS (INCHES) UNLESS OTHERWISE NOTED.

REVISED - 6-26-06

WITNESS MARKER & PERMANENT SURVEY MARKERS, TYPE II 66.2

DELINEATOR AND POST ORIENTATION

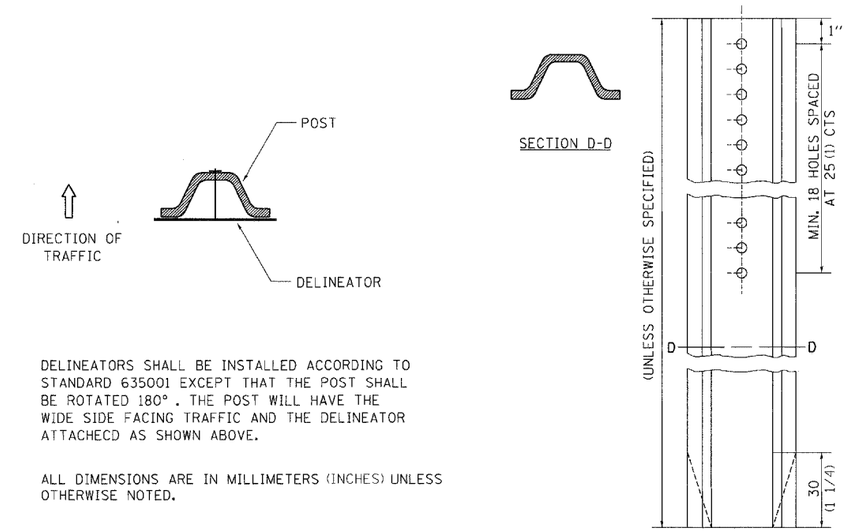

DELINEATORS SHALL BE INSTALLED ACCORDING TO STANDARD 635001 EXCEPT THAT THE POST SHALL BE ROTATED 180°. THE POST WILL HAVE THE WIDE SIDE FACING TRAFFIC AND THE DELINEATOR ATTACHECD AS SHOWN ABOVE.

ALL DIMENSIONS ARE IN MILLIMETERS (INCHES) UNLESS OTHERWISE NOTED.

REVISED - 11-01-07

DELINEATOR AND POST ORIENTATION 37.4

TYPICAL BENCHING ON EXISTING EMBANKMENT

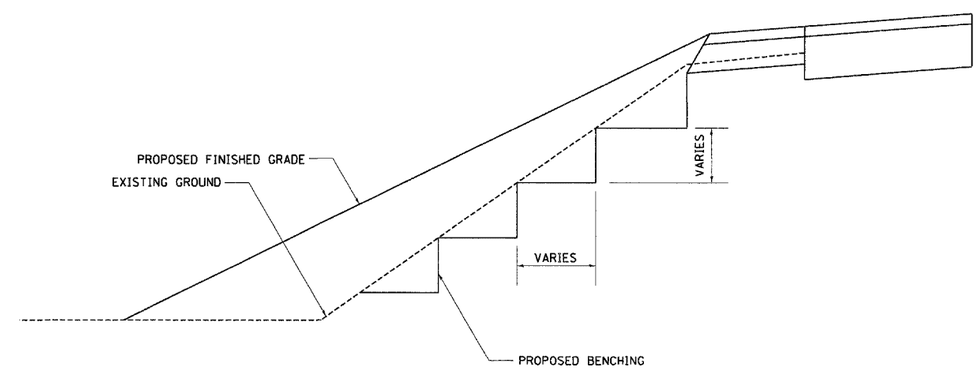

REVISED - 2-22-06

TYPICAL BENCHING ON EXISTING EMBANKMENT 50.4

FILE NAME = P:\2298-01 - US 20 Box Culvert\microstation files\00 Sheet Files\Z10106DET.dgn	USER NAME = IDOTCAD	DESIGNED - SPF	REVISED -	STATE OF ILLINOIS DEPARTMENT OF TRANSPORTATION	DISTRICT 2 STANDARD	F.A.P RTE.	SECTION	COUNTY	TOTAL SHEETS / SHEET NO.
		DRAWN - FJS	REVISED -			301	29T-1	JO DAVIESS	30 / 24
	PLOT SCALE = 30.0000 ' / IN.	CHECKED - JMS	REVISED -					CONTRACT NO. 64C58	
	PLOT DATE = 3/25/2008	DATE - 3-28-08	REVISED -		SCALE: SHEET NO. 6 OF 7 SHEETS STA. TO STA.	FED. ROAD DIST. NO.	ILLINOIS	FED. AID PROJECT	