F.A.P. RTE.	SECTION	COUNTY	TOTAL SHEETS	SHEET NO.
541	9 HB-I-1	LAKE	26	17
FED. ROAD DIST. NO.	ILLINOIS	FED. AID PROJECT		

Contract No. 60D90

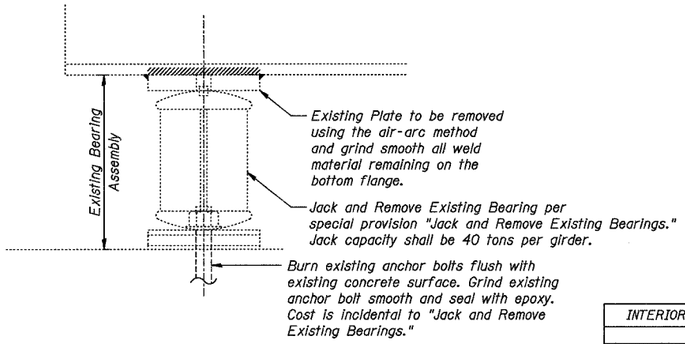

EXISTING BEARING REMOVAL DETAIL AT W. ABUT. GIRDERS 6 THRU 22

INTERIOR GIRDER REACTION TABLE	
	W. Abut.
R D (k)	44.7
R L (k)	46.1
Imp. (k)	11.4
R_{Total} (k)	102.2

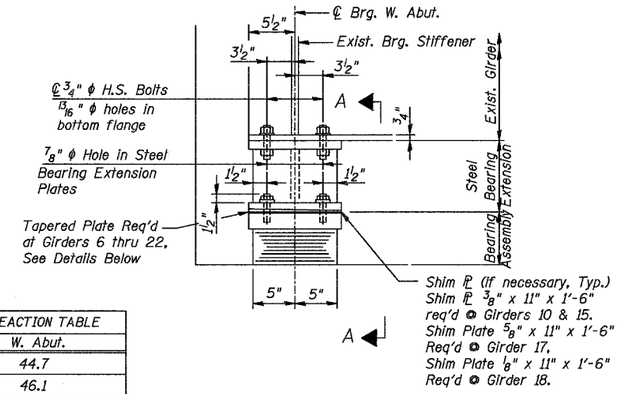

ELEVATION AT ABUT.

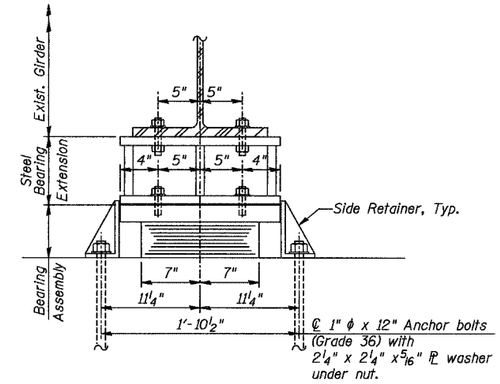

SECTION A-A

TYPE I ELASTOMERIC EXP. BRG. AT W. ABUT. GIRDERS 6 THRU 22

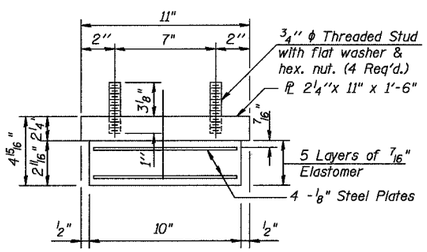

BEARING ASSEMBLY

Note:
Shim plates shall not be placed under Bearing Assembly.

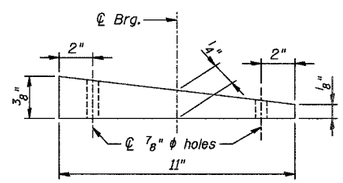

TAPERED PLATE
(Looking North)

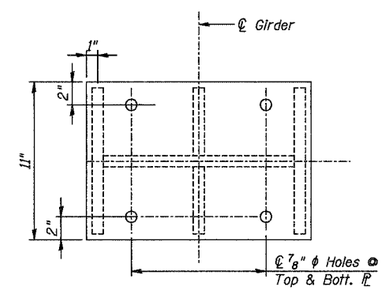

PLAN STEEL BEARING EXTENSION

Notes:

Anchor bolts shall be ASTM F1554 all-thread (or an Engineer-approved alternate material) of the grade(s) and diameter(s) specified. ASTM A307 Grade C anchor bolts may be used in lieu of ASTM F1554 Grade 36 (Fy=36ksi). The corresponding specified grade of AASHTO M314 anchor bolts may be used in lieu of ASTM F1554.

Drilled and set anchor bolts shall be installed according to Article 521.06 of the Standard Specifications.

Steel bearing extensions, shim plates, and connection bolts are included with Furnishing and Erecting Structural Steel.

Side retainers and other steel members required for the bearing assembly shall be included in the cost of Elastomeric Bearing Assembly, Type I.

The structural steel plates of the Bearing Assembly and the Steel Bearing Extension shall conform to the requirements of AASHTO M 270 Grade 36.

Two 1/8" adjusting shims shall be provided for each bearing in addition to all other plates or shims and placed as shown on the bearing details.

All bearing plates, steel bearing extensions, side retainers, anchor bolts, nuts, and washers shall be galvanized according to AASHTO M111 or M232 (as applicable).

Prior to ordering any material, the Contractor shall verify in the field all bearing height dimensions.

Diaphragm removal and replacement may be required to facilitate drilling holes. Cost included with Furnishing and Erecting Structural Steel.

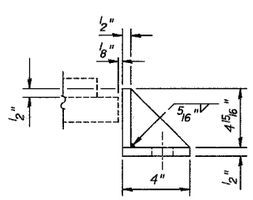

SIDE RETAINER
Equivalent rolled angle with stiffeners will be allowed in lieu of welded plates.

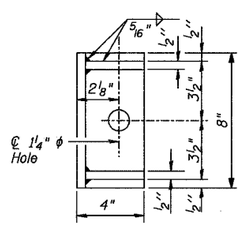

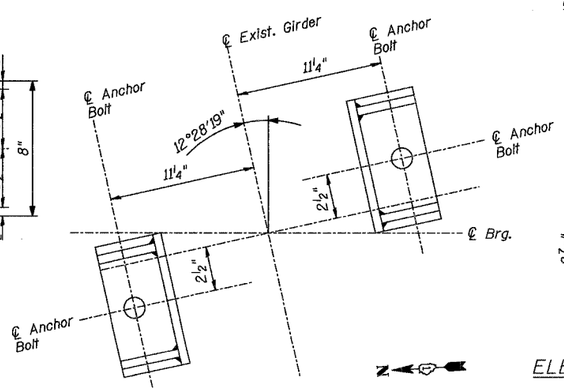

OFFSET SIDE RETAINER PLAN

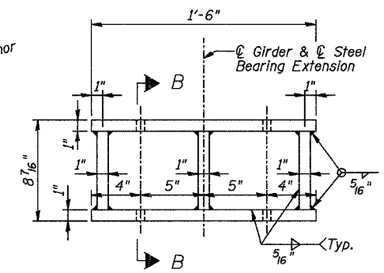

ELEVATION STEEL BEARING EXTENSION

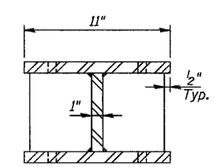

SECTION B-B

STEEL BEARING EXTENSION

BILL OF MATERIAL

Item	Unit	Total
Furnishing and Erecting Structural Steel	Pound	3,880
Jack and Remove Existing Bearings	Each	17
Elastomeric Bearing Assembly, Type I	Each	17
Anchor Bolts, 1"	Each	34

DESIGNED	S.D.H.
CHECKED	J.A.Z.
DRAWN	M.S.M.
CHECKED	S.D.H.

TYPE I ELASTOMERIC BEARING
GIRDERS 6 THRU 22
FAP 541 (GRAND AVE.) OVER
IL RTE. 137 (AMSTUTZ EXPY.)
SECTION 9 HB-I-1
LAKE COUNTY
STATION 6+46.04
S.N. 049-0118

DATE: 03-27-08

GRAEF, ANHALT, SCHLOEMER & ASSOCIATES INC
CHICAGO ILLINOIS

h:\jobs2006\20063028-43\cad\structural\dgn\00\118_3028-S10.dgn
3/20/2008