## LIGHT TOWER FOUNDATION DEPTH "D"

| MOUNTING HEIGHT | SOIL CONDITIONS | | | | | |
|---|---|---|---|---|---|---|
| | SOFT CLAY Qu = 0.375 TON/SQ. FT | MEDIUM CLAY Qu = 0.75 TON/SQ. FT | STIFF CLAY Qu = 1.50 TON/SQ. FT | LOOSE SAND Ø = 34° | MEDIUM SAND Ø = 37.5° | DENSE SAND Ø = 40° |
| 90 FT (27 m) | 29 FT (8.779 m) | 20 FT (6.035 m) | 15 FT (4.389 m) | 15 FT (4.389 m) | 13 FT (3.840 m) | 12 FT (3.429 m) |
| 100 FT (30 m) | 32 FT (9.754 m) | 22 FT (6.706 m) | 16 FT (4.877 m) | 16 FT (4.877 m) | 14 FT (4.267 m) | 13 FT (3.81 m) |
| 110 FT (33 m) | 35 FT (10.719 m) | 24 FT (7.377 m) | 18 FT (5.365 m) | 18 FT (5.365 m) | 15 FT (4.694 m) | 14 FT (4.191 m) |
| 120 FT (36 m) | 38 FT (11.705 m) | 26 FT (8.046 m) | 19 FT (5.652 m) | 19 FT (5.652 m) | 17 FT (5.120 m) | 16 FT (4.572 m) |

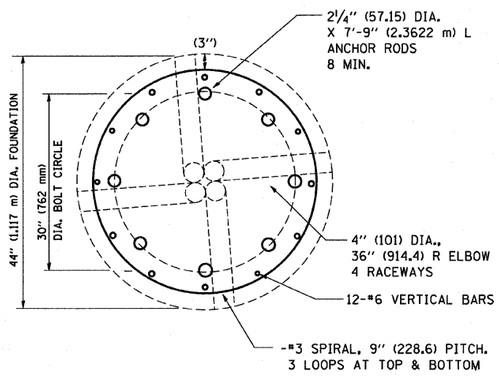


SECTION-B-B

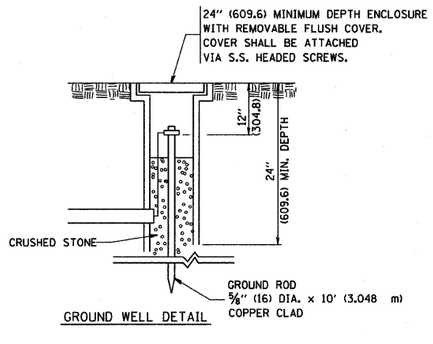


GROUND WELL DETAIL

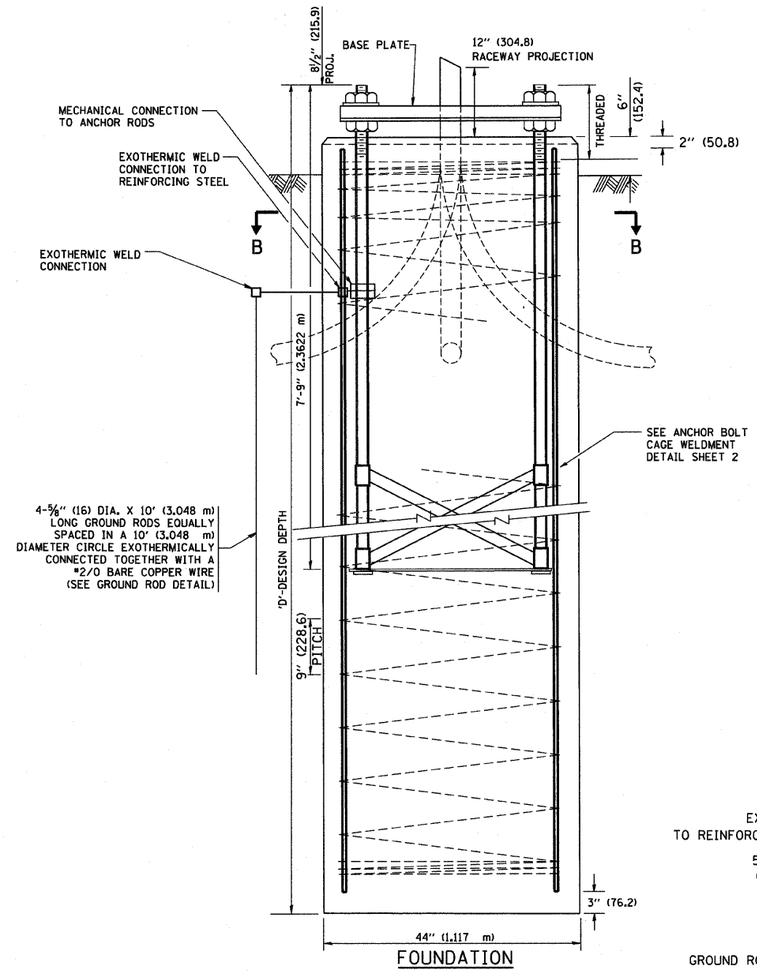


FOUNDATION ELEVATION

## DESIGN NOTES

(1) ALL DIMENSIONS IN INCHES (MILLIMETERS) UNLESS OTHERWISE SHOWN

(2) THE ANCHOR RODS SHALL BE VERTICAL NO ADJUSTMENT SHALL BE ALLOWED AFTER THE FOUNDATION IS PLACED.

(3) THE GAP BETWEEN THE FOUNDATION AND THE BASE PLATE SHALL BE ENCLOSED WITH A STAINLESS STEEL SCREEN FASTENED WITH A STAINLESS STEEL BAND.

(4) THE TOP OF THE FOUNDATION TO 18" (450) BELOW GRADE SHALL BE FORMED.

(5) SURFACE WATER WILL NOT BE PERMITTED TO ENTER THE HOLE AND ALL WATER WHICH MAY HAVE INFILTRATED INTO THE HOLE SHALL BE REMOVED BEFORE PLACING CONCRETE.

(6) THE LIGHT TOWER SHALL NOT BE ERECTED UNTIL AFTER THE CONCRETE HAS BEEN CURED ACCORDING TO ARTICLE 1020.13.

(7) ANCHOR RODS SHALL BE STRAIGHT AND SHALL BE ACCORDING TO AASHTO M 314 OR ASTM F1554, GRADE 725(GRADE 105) AND GALVANIZED ACCORDING TO ARTICLE 1006.9.

(8) ANCHOR ROD INFORMATION SHALL BE SUBMITTED FOR APPROVAL AND SHALL BE FULLY COORDINATED FOR APPROVAL WITH TOWER MANUFACTURER REQUIREMENTS.

(9) REINFORCEMENT BARS SHALL BE ACCORDING TO ARTICLE 1006.10

(10) TWO ANCHOR RODS OPPOSITE EACH OTHER SHALL HAVE THE ANCHOR ROD THREADS PEENED AFTER NUTS ARE INSTALLED.

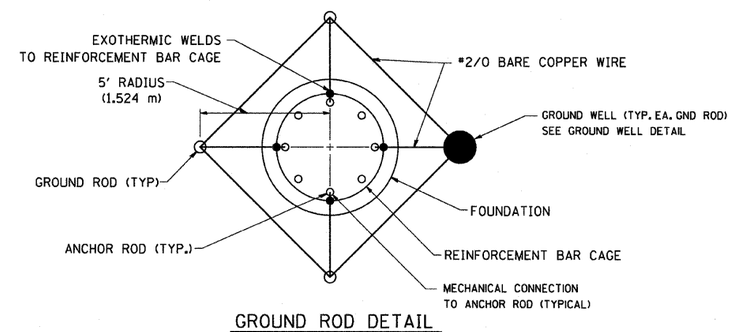


GROUND ROD DETAIL

**FOR INFORMATION ONLY**

| | | | | | | | | | | |
|---|---|---|---|---|---|---|---|---|---|---|
| FILE NAME = Wi\diststd\22x34\be501.dgn | USER NAME = gaglienobt | DESIGNED - | REVISED - R. TOMSONS 04-22-02 | STATE OF ILLINOIS DEPARTMENT OF TRANSPORTATION | HIGH MAST LIGHT TOWER 90 FT TO 120 FT (27 mTO 36 m) FOUNDATION DETAIL | F.A. RTE. | SECTION | COUNTY | TOTAL SHEETS | SHEET NO. |
| | | DRAWN - | REVISED - | | | 94 | 1717 I-7 | COOK | 47 | 42 |
| | PLOT SCALE = 50.000 ' / IN. | CHECKED - | REVISED - | | | | BE-501 | CONTRACT NO. 62979 | | |
| | PLOT DATE = 1/4/2008 | DATE - | REVISED - | | SCALE: NONE / SHEET NO. 1 OF 2 SHEETS / STA. / TO STA. | FED. ROAD DIST. NO. 1 | ILLINOIS | FED. AID PROJECT | | |