06–II–2021 LETTING ITEM 208

F.A.I. RTE.	SECTION	COUNTY	TOTAL SHEETS	SHEET NO.
474	72[1RS-3;(2-4)RS-2]	PEORIA	240*	1
	ILLINOIS	CONTRACT NO. 68C45		

* 240 + 19 = 259 TOTAL SHEETS

STATE OF ILLINOIS
DEPARTMENT OF TRANSPORTATION

FOR INDEX OF SHEETS, SEE SHEET NO. 2

PROPOSED HIGHWAY PLANS

FAI ROUTE 474 (INTERSTATE 474)
SECTION 72[1RS–3;(2–4)RS–2]
PROJECT NHPP–KSSN(433)
TYPE of IMPROVEMENT – 3R (RESURF.)
PEORIA COUNTY

C–94–057–15

D–94–026–15

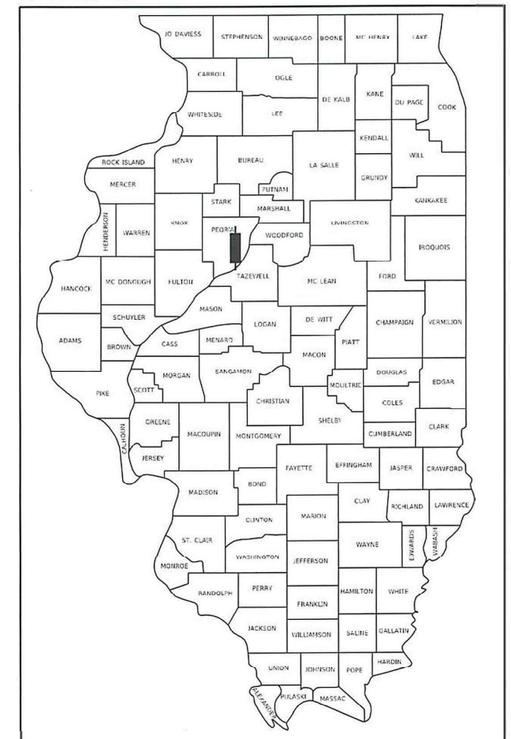

LOCATION OF SECTION INDICATED THUS: –

THIS PROJECT CONSISTS OF CLASS A PATCHING, EXPANSION JOINT REPLACEMENT, HMA SURFACE REMOVAL, PLACEMENT OF HMA BINDER AND SMA SURFACE, DRAINAGE IMPROVEMENTS, GUARDRAIL REPLACEMENT, PAVEMENT MARKINGS ALONG WITH RRPM'S, AGGREGATE SHOULDERS, ELECTRICAL IMPROVEMENTS, STRUCTURAL REPAIRS AND OTHER RELATED COLLATERAL WORK NECESSARY TO COMPLETE THE PROJECT.

HIGHWAY STANDARDS

001001–02	604101–01	701411–09	780001–05
280001–07	606001–07	701422–10	781001–04
424001–11	630001–12	701426–09	782006–01
424011–04	630301–09	701427–05	821101–02
424021–06	631011–10	701428–01	830021–03
424031–02	631031–17	701446–11	838001–01
442001–04	635001–02	701451–05	
442101–09	642001–02	701456–05	
542301–03	665001–02	701606–10	
542401–04	701101–05	701701–10	
542531–04	701106–02	701801–06	
542546–01	701201–05	701901–08	
542601–03	701400–10	704001–08	
601001–05	701401–12	720011–01	
601101–02	701402–12	725001–01	
604036–03	701406–12	729001–01	

I–474 DESIGN DESIGNATION

INTERSTATE
CLASS I TRUCK ROUTE
ADT = 30,800
MU = 9.0%
SU = 3.2%

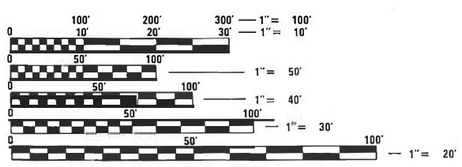

FULL SIZE PLANS HAVE BEEN PREPARED USING STANDARD ENGINEERING SCALES. REDUCED SIZED PLANS WILL NOT CONFORM TO STANDARD SCALES. IN MAKING MEASUREMENTS ON REDUCED PLANS, THE ABOVE SCALES MAY BE USED.

J.U.L.I.E.
JOINT UTILITY LOCATION INFORMATION FOR EXCAVATORS
1–800–892–0123
OR 811

PROJECT ENGINEER: RICH DOTSON (309)671–3455
PROJECT MANAGERS: SARAH ELDERZI (309)671–3471
RON NOLTE (309)671–3470

CONTRACT NO. 68C45

PROJECT BEGINS
STA. 46 + 55 (474)

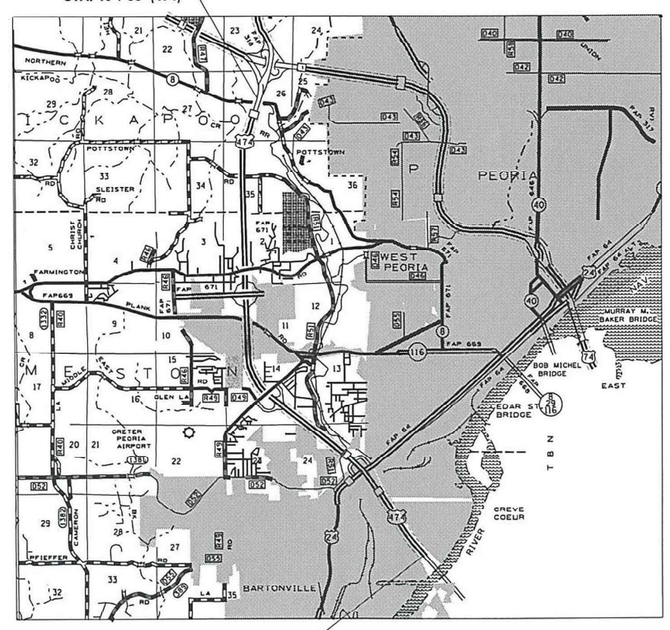

PROJECT ENDS
STA. 62 + 81 (474)

GROSS LENGTH = 72,653 FT. = 13.76 MILE
NET LENGTH = 40,973 FT. = 7.76 MILE

STATION EQUATIONS

STA. 186 + 92.01(BK) =
STA. 186 + 90.89(AH)

STA. 248 + 99.73(BK) =
STA. 248 + 98.96(AH)

STA. 449 + 28.26(BK) =
STA. 56 + 07.73(AH)

STATE OF ILLINOIS
DEPARTMENT OF TRANSPORTATION

SUBMITTED March 19 20 21
REGIONAL ENGINEER

May 7, 2021
ENGINEER OF DESIGN AND ENVIRONMENT

May 7, 2021
DIRECTOR OF HIGHWAYS PROJECT IMPLEMENTATION

PRINTED BY THE AUTHORITY OF THE STATE OF ILLINOIS

REV. 5/5/21 REV. 4/28/21 REV. 4/26/21 REV. 3/24/21

AVAILABILITY OF ELECTRONIC FILES

MicroStation and GEOPAK files of this project will be made available to the Contractor after contract award. If there is a conflict between the electronic files and the printed contract plans and documents, the printed contract plans and documents shall take precedence over the electronic files. The Contractor shall accept all risk associated with using the electronic files and shall hold the Department harmless for any errors or omissions in the electronic files and the data contained therein. Errors or delays resulting from the use of the electronic files by the Contractor shall not result in an extension of time for any interim or final completion date or shall not be considered cause for additional compensation. The Contractor shall not use, share, or distribute these electronic files except for the purpose of constructing this contract. Any claims by third parties due to use or errors shall be the responsibility of the Contractor. The Contractor shall include this disclaimer with the transfer of these electronic files to any other parties and shall include appropriate language binding them to similar responsibilities.

COMMITMENTS

There are no commitments for this contract.

WINTER SHUTDOWN RESTRICTIONS ON COLD MILLED PROJECTS

Prior to winter shutdown the following steps shall be taken:

- All cold milled surfaces shall be overlaid.
- All lanes shall be reopened to traffic.
- Manholes, where applicable, shall be adjusted to the elevation of the binder course/leveling binder to ease in plowing snow, and re–adjusted to finished grade in the Spring. The initial manhole adjustment will be paid for at the contract unit price and any re–adjustment, as directed by the Engineer, will be paid for in accordance with Article 109.04.
- Temporary or permanent pavement marking shall be placed as applicable.

ENVIRONMENTAL REVIEWS

Prior to the use of any proposed borrow areas, use areas (temporary access roads, detours, run–arounds, etc.) and/or waste areas, the Contractor shall file the required environmental resource request surveys according to Section 107.22 of the Standard Specifications. These surveys are required in order for the Department to conduct cultural and biological resource surveys for the proposed site.

The required environmental resource documentation shall include the following:

* BDE Form 2289 (Borrow Site Review)
* BDE Form 2290 (Waste/Use Area Review)
* A location map showing the size limits and location of the use area
* Color photographs depicting the use area
* Borrow Area Entry Agreement form – D4 PI0101

Prior to any waste materials being removed from the construction site the required environmental resource surveys shall be obtained and filed by the Contractor. Excess waste products removed from the construction site shall be disposed of as required in Section 202.03 of the Standard Specifications.

Any protruding metal bars shall be removed prior to the disposal of broken concrete at approved disposal sites.

Please note that a minimum of four weeks shall be allowed for the District to obtain the required waste site environmental clearances and six weeks for the required borrow site environmental clearances.

406.01 BRIDGE OVERLAY NOTIFICATION

After placement of the bridge deck overlay, the Resident Engineer shall notify the District Bridge Maintenance Engineer of the "as constructed" milling depth and overlay thickness for updating the Illinois Highway Information System.

PAVEMENT STATIONING NUMBERS & PLACEMENT

The Contractor shall provide labor and materials required to imprint pavement station numbers in the finished surface of the pavement and/or overlay. The numbers shall be approximately 3/4 inch (20 mm) wide, 5 inches (125 mm) high and 5/8 inch (15 mm) deep.

The pavement station numbers shall be installed as specified herein:

Interval – 200 feet (English stationing) or 100 meters (metric stationing)

Bottom of Numbers – 6 inches (150 mm) from the inside edge of the pavement marking

Location:
- 2, 3, & 5 Lane Pavements – right edge of pavement in direction of increasing stations
- Multi–Lane Divided Roadways – outside edge of pavement in both directions
- Ramps – along baseline edge of pavement

Position – stations shall be placed so they can be read from the adjacent shoulder

Format – English (Metric) pavement stations shall use this format "XXX (XX+X00)", where X represents the pavement station

This work will not be paid for separately, but will be included in the cost of the associated pavement and/or overlay pay items.

MINIMUM VERTICAL CLEARANCE

The Contractor shall verify the existing structure vertical clearance prior to placing bituminous overlay under any structure. A minimum (*) vertical clearance shall be maintained under all structures.

BUTT JOINT CUTTING TIME RESTRICTION

Butt joints shall not be milled more than three (3) days prior to placement of the HMA surface course.

CROSSING EXISTING STRUCTURES WITH EQUIPMENT

The following structures may be crossed with the empty MTD with a maximum gross weight of 40 tons :

072–0112	072–0121	072–0129
072–0113	072–0122	072–0130
072–0114	072–0124	072–0131
072–0115	072–0125	072–0132
072–0116	072–0127	
072–0117	072–0128	

Any structures not listed above shall be verified by the resident prior to beginning work.

ORDERING LENGTH CONFIRMATION – DRAINAGE ITEMS

The Contractor shall consult with the Engineer in regard to the exact length of the box/pipe culverts, storm sewers, and/or pipe drains required prior to ordering these items.

EXISTING DRAINAGE PIPES CONNECTED TO NEW STRUCTURES

In accordance with Section 602 of the Standard Specifications, the connecting of existing drain tiles, pipe culverts, or storm sewers to the proposed drainage system structures will not be paid for separately but shall be considered as included in the pay items provided.

SECURING DRAINAGE STRUCTURE GRATES

Prior to routing traffic onto the shoulders as shown in the staging plans, the Constractor shall secure gratings on shoulder inlets as directed by the Engineer. This work will not be paid for separately, but shall be included in the cost of the traffic control pay item.

ADDITIONAL SUPPLEMENTAL TRAFFIC CONTROL

The Department reserves the right at any time to add additional Traffic Control Systems or devices within the active contract limits, by means of an additional contract. All terms of Article 105.08 of the Standard Specifications shall be followed by each Contractor.

INDEX OF SHEETS

JOB SPECIFIC NOTES

THE CONTRACTOR SHALL LOCATE ALL PIPE UNDERDRAIN HEADWALLSAND CLEAN/ REPAIR AS NEEDED. THIS WORK SHALL BE PAID FOR IN ACCORDANCE OF ART. 109.04 OF THE STANDARD SPECIFICATIONS FOR ROAD AND BRIDGE CONSTRUCTION.

STATUS OF UTILITIES

ROUTE	OFFSET	LOCATION	TYPE OF UTILITY	TYPE OF CONFLICT	DISPOSITION	OWNER
I474	90' LT	STA 56+45	13.2 KV BURIED	GUARDRAIL (REMOVE/ REPLACE)	CAUTION	AMEREN ILLINOIS (ELECTRIC)
I474	75' RT	STA 222+50	13.2 KV BURIED	GUARDRAIL (REMOVE/ REPLACE)	CAUTION	AMEREN ILLINOIS (ELECTRIC)
I474	25' RT	STA 222+70	13.2 KV BURIED	GUARDRAIL (REMOVE/ REPLACE)	CAUTION	AMEREN ILLINOIS (ELECTRIC)
I474	82' LT	STA 360+25	69 KV BURIED	GUARDRAIL (REMOVE/ REPLACE)	CAUTION	AMEREN ILLINOIS (ELECTRIC)
I474	28' LT	STA 360+80	69 KV BURIED	GUARDRAIL (REMOVE/ REPLACE)	CAUTION	AMEREN ILLINOIS (ELECTRIC)
I474	105' RT	STA 361+85	69 KV BURIED	GUARDRAIL (REMOVE/ REPLACE)	CAUTION	AMEREN ILLINOIS (ELECTRIC)
US 24	70' RT	STA 208+20 TO STA 121+70	24" STEEL HP	GUARDRAIL (REMOVE/ REPLACE)	CAUTION	AMEREN ILLINOIS (GAS)
RAMP C	15' RT	STA 5+80	BURIED FIBER	GUARDRAIL (REMOVE/ REPLACE)	CAUTION	BLUEBIRD
RAMP B	15' RT	STA 19+00 TO STA 20+92	BURIED FIBER	GUARDRAIL (REMOVE/ REPLACE)	CAUTION	BLUEBIRD
RAMP D	RT TO LT	STA 7+12	FIBER	GUARDRAIL (REMOVE/ REPLACE)	CAUTION	CMS
RAMP E	45' LT	STA 3+72.5 TO STA 3+76.5	FIBER	APRON REMOVAL	CAUTION	CMS
RAMP D	18' RT	STA 22+80	24" SANITARY LINE	GUARDRAIL (REMOVE/ REPLACE)	CAUTION	GREATER PEORIA SANITARY DISTRICT
I474	85' LT	STA 285+45	FIBER	GUARDRAIL (REMOVE/ REPLACE)	CAUTION	TURNKEY NETWORK SYSTEMS

40605034	40605015	40603200, 48203100	40604172	40603208	48203009, 48203013, 48203100	48203013	40800050	40604162
MAINLINE & INSIDE SHOULDER SURFACE 2"	MAINLINE BOTTOM LIFT 2"	MAINLINE 2ND LIFT & INSIDE SHOULDER 1ST LIFT, HMA SHOULDERS 1ST LIFT, MAXWELL & INSIDE SHOULDER 1ST LIFT	ALL RAMP PAVEMENTS AND INSIDE SHOULDERS	AIRPORT/ US 24 PAVEMENTS AND INSIDE SHOULDERS	MAINLINE HMA SHOULDERS, HMA SHOULDERS 3" BOTH LIFTS, HMA SHOULDERS 4"	AIRPORT/ US 24 HMA SHOULDERS 4"	GORES	
Polymer SMA Surface Course (2")	Polymer SMA Binder Course (2")	Polymer Binder Course (Mainline 1" and Maxwell Ramps)	Ramps (Polymer Surface Lift) inside and driving lane	Ramps (Polymer Lower Lift)	HMA Shoulders (Surface Lift) & Cross-Overs	HMA Shoulder (Lower Lift) outside shoulder, 2"	Incidental Surface	Bridge Deck Overlays 1.5"
SBS or SBR **76-28**	SBS or SBR **76-28**	SBS or SBR **76-22**	SBS or SBR **76-28**	SBS or SBR **76-28**	PG 58-28	PG 58-28	PG 58-28	SBS or SBR **76-28**
4.0% @ N=80	4.0% @ N=80	4.0% @ N=50	4.0% @ N=70	4.0% @ N=70	4.0% @ N=50	4.0% @ N=50	4.0% @ N=50	4.0% @ N-70
IL12.5	IL12.5	IL 4.75	IL 9.5	IL 9.5	IL 9.5FG	IL 9.5	IL 9.5FG	IL-9.5
Mixture E	N.A.	N.A.	Mixture E	N.A.	Mixture C	N.A.	N.A.	Mixture D
PFP	PFP	PFP	QCP	QCP	QC/QA	QC/QA	QC/QA	QCQA

POLYMERIZED BITUMINOUS MATERIALS (TACK COAT) RATES

Surface Type	Residual Rate
Milled (HMA or PCC)	0.08 lb /sq ft
Existing Pavement	0.08 lb /sq ft
Fog Coat (between lifts)	0.08 lb /sq ft

MODEL: $MODELNAME$
FILE NAME: $FILEL$

USER NAME = $USER$	DESIGNED -	REVISED -
	DRAWN -	REVISED -
PLOT SCALE = $SCALE$	CHECKED -	REVISED -
PLOT DATE = $DATE$	DATE -	REVISED -

STATE OF ILLINOIS
DEPARTMENT OF TRANSPORTATION

STATUS OF UTILITIES &
HMA MIXTURE REQUIREMENTS

SCALE: SHEET OF SHEETS STA. TO STA.

F.A.I. RTE.	SECTION	COUNTY	TOTAL SHEETS	SHEET NO.
474	72[1RS-3:(2-4)RS-2]	PEORIA		3

CONTRACT NO. 68C45

ILLINOIS FED. AID PROJECT

CODE NO.	ITEM	UNIT	TOTAL QUANTITY	CONSTRUCTION CODE		
				HIGHWAY	LIGHTING/SIGNAL	BRIDGE
				0006	0021	0047
				90% FED	90% FED	90% FED
				10% STATE	10% STATE	10% STATE
				URBAN	URBAN	URBAN
20100110	TREE REMOVAL (6 TO 15 UNITS DIAMETER)	UNIT	298	298		
20100210	TREE REMOVAL (OVER 15 UNITS DIAMETER)	UNIT	330	330		
20100500	TREE REMOVAL, ACRES	ACRE	5.2	5.2		
20201200	REMOVAL AND DISPOSAL OF UNSUITABLE MATERIAL	CU YD	77	77		
20300100	CHANNEL EXCAVATION	CU YD	346	346		
20400800	FURNISHED EXCAVATION	CU YD	97	97		
21400100	GRADING AND SHAPING DITCHES	FOOT	2706	2706		
25000210	SEEDING, CLASS 2A	ACRE	5	5		
25000400	NITROGEN FERTILIZER NUTRIENT	POUND	449	449		
25000500	PHOSPHORUS FERTILIZER NUTRIENT	POUND	449	449		
25000600	POTASSIUM FERTILIZER NUTRIENT	POUND	449	449		

CODE NO.	ITEM	UNIT	TOTAL QUANTITY	CONSTRUCTION CODE		
				HIGHWAY	LIGHTING/SIGNAL	BRIDGE
				0006	0021	0047
				90% FED	90% FED	90% FED
				10% STATE	10% STATE	10% STATE
				URBAN	URBAN	URBAN
25000750	MOWING	ACRE	125	125		
25100630	EROSION CONTROL BLANKET	SQ YD	24170	24170		
28000305	TEMPORARY DITCH CHECKS	FOOT	230	230		
28000400	PERIMETER EROSION BARRIER	FOOT	533	533		
28200200	FILTER FABRIC	SQ YD	2399	2399		
31100300	SUB-BASE GRANULAR MATERIAL, TYPE A 4"	SQ YD	986	986		
40600295	POLYMERIZED BITUMINOUS MATERIALS (TACK COAT)	POUND	814497	814497		
40600982	HOT - MIX ASPHALT SURFACE REMOVAL - BUTT JOINT	SQ YD	6868	6868		
40600990	TEMPORARY RAMP	SQ YD	325	325		
40603200	POLYMERIZED HOT-MIX ASPHALT BINDER COURSE, IL-4.75, N50	TON	16639	16639		
40603208	POLYMERIZED HOT-MIX ASPHALT BINDER COURSE, IL-9.5, N70	TON	3340	3340		
40604162	POLYMERIZED HOT-MIX ASPHALT SURFACE COURSE, IL-9.5, MIX "D", N70	TON	354			354
40604172	POLYMERIZED HOT-MIX ASPHALT SURFACE COURSE, IL-9.5, MIX "E", N70	TON	5850	5850		
40605015	POLYMERIZED HOT-MIX ASPHALT BINDER COURSE, STONE MATRIX ASPHALT 12.5, N80	TON	25688	25688		

	CODE NO.	ITEM	UNIT	TOTAL QUANTITY	CONSTRUCTION CODE		
					HIGHWAY	LIGHTING/SIGNAL	BRIDGE
					0006	0021	0047
					90% FED	90% FED	90% FED
					10% STATE	10% STATE	10% STATE
					URBAN	URBAN	URBAN
	40605034	POLYMERIZED HOT-MIX ASPHALT SURFACE COURSE, STONE MATRIX ASPHALT, 12.5, MIX "E", N80	TON	31498	31498		
	40800050	INCIDENTAL HOT - MIX ASPHALT SURFACING	TON	953	953		
	42400410	PORTLAND CEMENT CONCRETE SIDEWALK 8 INCH	SQ FT	1053	1053		
*	42400800	DETECTABLE WARNINGS	SQ FT	100	100		
	44000152	HOT - MIX ASPHALT SURFACE REMOVAL, 3/4"	SQ YD	14752	14752		
	44000153	HOT - MIX ASPHALT SURFACE REMOVAL, 1"	SQ YD	7781	7781		
	44000157	HOT - MIX ASPHALT SURFACE REMOVAL, 2 "	SQ YD	152420	152420		
	44000161	HOT - MIX ASPHALT SURFACE REMOVAL, 3"	SQ YD	5972	5972		
	44000163	HOT - MIX ASPHALT SURFACE REMOVAL, 3 1/2"	SQ YD	37550	37550		
	44000165	HOT - MIX ASPHALT SURFACE REMOVAL, 4"	SQ YD	229117	229117		
	44000500	COMBINATION CURB AND GUTTER REMOVAL	FOOT	70	70		
	44000600	SIDEWALK REMOVAL	SQ FT	655	655		
	44003100	MEDIAN REMOVAL	SQ FT	105	105		
	44004000	PAVED DITCH REMOVAL	FOOT	231	231		

*= SPECIALTY ITEM

CODE NO.	ITEM	UNIT	TOTAL QUANTITY	CONSTRUCTION CODE		
				HIGHWAY	LIGHTING/SIGNAL	BRIDGE
				0006	0021	0047
				90% FED	90% FED	90% FED
				10% STATE	10% STATE	10% STATE
				URBAN	URBAN	URBAN
44004250	PAVED SHOULDER REMOVAL	SQ YD	119	119		
44200529	CLASS A PATCHES, TYPE II, 8 INCH	SQ YD	890	890		
44200533	CLASS A PATCHES, TYPE III, 8 INCH	SQ YD	178	178		
44200535	CLASS A PATCHES, TYPE IV, 8 INCH	SQ YD	272	272		
44200583	CLASS A PATCHES, TYPE IV, 12 INCH	SQ YD	407	407		
44200956	CLASS B PATCHES, TYPE II, 9 INCH	SQ YD	112	112		
44200962	CLASS B PATCHES, TYPE III, 9 INCH	SQ YD	50	50		
44201007	CLASS B PATCHES, TYPE II, 13 INCH	SQ YD	1603	1603		
44201296	DEFORMED BARS - EXPANSION JOINT	EACH	1612	1612		
44201298	DOWEL BARS 1 1/4"	EACH	504	504		
44213000	PATCHING REINFORCEMENT	SQ YD	1829	1829		
44213200	SAW CUTS	FOOT	14243	14243		
44213204	TIE BARS 3/4"	EACH	427	427		
48102100	AGGREGATE WEDGE SHOULDER, TYPE B	TON	6803	6803		

CODE NO.	ITEM	UNIT	TOTAL QUANTITY	CONSTRUCTION CODE		
				HIGHWAY	LIGHTING/SIGNAL	BRIDGE
				0006	0021	0047
				90% FED	90% FED	90% FED
				10% STATE	10% STATE	10% STATE
				URBAN	URBAN	URBAN
48203009	HOT - MIX ASPHALT SHOULDERS, 3"	SQ YD	3420	3420		
48203013	HOT - MIX ASPHALT SHOULDERS, 4"	SQ YD	8713	8713		
48203100	HOT - MIX ASPHALT SHOULDERS	TON	15297	15297		
50102400	CONCRETE REMOVAL	CU YD	32.9			32.9
50104400	CONCRETE HEADWALL REMOVAL	EACH	6	6		
50104650	SLOPE WALL REMOVAL	SQ YD	200			200
50105220	PIPE CULVERT REMOVAL	FOOT	1825	1825		
50300225	CONCRETE STRUCTURES	CU YD	134.6	107		27.6
50300255	CONCRETE SUPERSTRUCTURE	CU YD	32.9			32.9
50300300	PROTECTIVE COAT	SQ YD	435.1			435.1
50500405	FURNISHING AND ERECTING STRUCTURAL STEEL	POUND	6185			6185
50800205	REINFORCEMENT BARS, EPOXY COATED	POUND	60,492	49782		10,710
50800515	BAR SPLICERS	EACH	64			64
51100100	SLOPE WALL 4 INCH	SQ YD	200			200

CODE NO.	ITEM	UNIT	TOTAL QUANTITY	CONSTRUCTION CODE		
				HIGHWAY	LIGHTING/SIGNAL	BRIDGE
				0006	0021	0047
				90% FED	90% FED	90% FED
				10% STATE	10% STATE	10% STATE
				URBAN	URBAN	URBAN
52000110	PREFORMED JOINT STRIP SEAL	FOOT	508			508
52100010	ELASTOMERIC BEARING ASSEMBLY, TYPE 1	EACH	41			41
52100520	ANCHOR BOLTS, 1"	EACH	82			82
54210189	PIPE ELBOW, 24"	EACH	2	2		
54210190	PIPE ELBOW, 30"	EACH	1	1		
54213459	END SECTIONS 24"	EACH	2	2		
54213465	END SECTIONS 30"	EACH	1	1		
54213477	END SECTIONS 42"	EACH	1	1		
54213669	PRECAST REINFORCED CONCRETE FLARED END SECTIONS 24"	EACH	3	3		
54213675	PRECAST REINFORCED CONCRETE FLARED END SECTIONS 30"	EACH	2	2		
54244405	FLUSH INLET BOX FOR MEDIAN, STANDARD 542546	EACH	3	3		
54246405	INLET BOX, STANDARD 542531	EACH	1	1		
54247130	GRATING FOR CONCRETE FLARED END SECTION 24"	EACH	1	1		
54247150	GRATING FOR CONCRETE FLARED END SECTION 30"	EACH	2	2		

CODE NO.	ITEM	UNIT	TOTAL QUANTITY	CONSTRUCTION CODE		
				HIGHWAY	LIGHTING/SIGNAL	BRIDGE
				0006	0021	0047
				90% FED	90% FED	90% FED
				10% STATE	10% STATE	10% STATE
				URBAN	URBAN	URBAN
54248510	CONCRETE COLLAR	CU YD	1.3	1.3		
542A1069	PIPE CULVERTS, CLASS A, TYPE 2 24"	FOOT	28	28		
542C1075	PIPE CULVERTS, CLASS C, TYPE 2 30"	FOOT	75	75		
542D1057	PIPE CULVERTS, CLASS D, TYPE 2 12"	FOOT	27	27		
542D1069	PIPE CULVERTS, CLASS D, TYPE 2 24"	FOOT	258	258		
58100200	WATERPROOFING MEMBRANE SYSTEM	SQ YD	2524			2524
60100060	CONCRETE HEADWALL FOR PIPE DRAINS	EACH	63	63		
60108100	PIPE UNDERDRAINS 4" (SPECIAL)	FOOT	1419	1419		
60246605	MEDIAN INLET (604101)	EACH	1	1		
60260100	INLETS TO BE ADJUSTED	EACH	13	13		
60402210	GRATES, TYPE 8	EACH	1	1		
60600605	CONCRETE CURB, TYPE B	FOOT	600	600		
60605000	COMBINATION CONCRETE CURB AND GUTTER, TYPE B-6.24	FOOT	70	70		
* 63000001	STEEL PLATE BEAM GUARD RAIL, TYPE A, 6 FOOT POSTS	FOOT	19497	19497		

*= SPECIALTY ITEM

	CODE NO.	ITEM	UNIT	TOTAL QUANTITY	CONSTRUCTION CODE		
					HIGHWAY	LIGHTING/SIGNAL	BRIDGE
					0006	0021	0047
					90% FED	90% FED	90% FED
					10% STATE	10% STATE	10% STATE
					URBAN	URBAN	URBAN
*	63100045	TRAFFIC BARRIER TERMINAL, TYPE 2	EACH	16	16		
*	63100085	TRAFFIC BARRIER TERMINAL, TYPE 6	EACH	54	54		
*	63100167	TRAFFIC BARRIER TERMINAL, TYPE 1 (SPECIAL) TANGENT	EACH	36	36		
*	63100169	TRAFFIC BARRIER TERMINAL, TYPE 1 (SPECIAL) FLARED	EACH	1	1		
	63200310	GUARDRAIL REMOVAL	FOOT	21555	21555		
	64200116	SHOULDER RUMBLE STRIPS, 16 INCH	FOOT	155331	155331		
	66500105	WOVEN WIRE FENCE, 4'	FOOT	170	170		
	67000400	ENGINEER'S FIELD OFFICE, TYPE A	CAL MO	18	18		
	67100100	MOBILIZATION	L SUM	1	1		
	70103815	TRAFFIC CONTROL SURVEILLANCE	CAL DA	180	180		
	70107025	CHANGEABLE MESSAGE SIGN	CAL DA	2400	2400		
	70300100	SHORT-TERM PAVEMENT MARKING	FOOT	15786	15786		
	70300150	SHORT TERM PAVEMENT MARKING REMOVAL	SQ FT	5262	5262		
	70300210	TEMPORARY PAVEMENT MARKING - LETTERS AND SYMBOLS	SQ FT	228	228		

*= SPECIALTY ITEM

	CODE NO.	ITEM	UNIT	TOTAL QUANTITY	CONSTRUCTION CODE		
					HIGHWAY	LIGHTING/SIGNAL	BRIDGE
					0006	0021	0047
					90% FED	90% FED	90% FED
					10% STATE	10% STATE	10% STATE
					URBAN	URBAN	URBAN
	70300220	TEMPORARY PAVEMENT MARKING - LINE 4"	FOOT	207853	207853		
	70300240	TEMPORARY PAVEMENT MARKING - LINE 6"	FOOT	22265	22265		
	70300250	TEMPORARY PAVEMENT MARKING - LINE 8"	FOOT	19730	19730		
	70300260	TEMPORARY PAVEMENT MARKING - LINE 12"	FOOT	2630	2630		
	70300280	TEMPORARY PAVEMENT MARKING - LINE 24"	FOOT	150	150		
*	72501000	TERMINAL MARKER - DIRECT APPLIED	EACH	37	37		
	72700100	STRUCTURAL STEEL SIGN SUPPORT - BREAKAWAY	POUND	520	520		
*	78003100	PREFORMED PLASTIC PAVEMENT MARKING, TYPE B - LETTERS & SYMBOLS	SQ FT	228	228		
	73400100	CONCRETE FOUNDATIONS	CU YD	1.4	1.4		
*	78003110	PREFORMED PLASTIC PAVEMENT MARKING, TYPE B - LINE 4"	FOOT	207853	207853		
*	78003130	PREFORMED PLASTIC PAVEMENT MARKING, TYPE B - LINE 6"	FOOT	22265	22265		
*	78003140	PREFORMED PLASTIC PAVEMENT MARKING, TYPE B - LINE 8"	FOOT	19730	19730		
*	78003150	PREFORMED PLASTIC PAVEMENT MARKING, TYPE B - LINE 12"	FOOT	2630	2630		
*	78003180	PREFORMED PLASTIC PAVEMENT MARKING, TYPE B - LINE 24"	FOOT	150	150		
*	78100100	RAISED REFLECTIVE PAVEMENT MARKER	EACH	2094	2094		
*	78200005	GUARDRAIL REFLECTORS, TYPE A	EACH	288	288		

*= SPECIALTY ITEM

MODEL: $MODELNAME$
FILE NAME: $FILEL$

USER NAME = $USER$	DESIGNED -	REVISED -
	DRAWN -	REVISED -
PLOT SCALE = $SCALE$	CHECKED -	REVISED -
PLOT DATE = $DATE$	DATE -	REVISED -

STATE OF ILLINOIS
DEPARTMENT OF TRANSPORTATION

SUMMARY OF QUANTITIES

F.A.I. RTE.	SECTION	COUNTY	TOTAL SHEETS	SHEET NO.
474	72(1RS-3;(2-4)RS-2)	PEORIA	240	12
		CONTRACT NO. 68C45		
	ILLINOIS FED. AID PROJECT			

REV. 4/28/21 REV. 4/12/21

	CODE NO.	ITEM	UNIT	TOTAL QUANTITY	CONSTRUCTION CODE		
					HIGHWAY	LIGHTING/SIGNAL	BRIDGE
					0006	0021	0047
					90% FED	90% FED	90% FED
					10% STATE	10% STATE	10% STATE
					URBAN	URBAN	URBAN
	78300200	RAISED REFLECTIVE PAVEMENT MARKER REMOVAL	EACH	2094	2094		
*	80400100	ELECTRIC SERVICE INSTALLATION	EACH	3		3	
*	81028320	UNDERGROUND CONDUIT, PVC, 1"DIA.	FOOT	11		11	
*	82110008	LUMINAIRE, LED, ROADWAY, OUTPUT DESIGNATION H	EACH	137		137	
*	82110032	LUMINAIRE, LED, SIGN LIGHTING, OUTPUT DESIGNATION E	EACH	21		21	
*	82500310	LIGHTING CONTROLLER, PEDESTAL MOUNTED, 240VOLT, 60 AMP	EACH	3		3	
*	82500380	LIGHTING CONTROLLER, BASE MOUNTED, 480VOLT, 200AMP	EACH	1		1	
*	83060830	LIGHT POLE, GALVANIZED STEEL, 45FT. M.H., TENON MOUNT	EACH	1		1	
*	87301225	ELECTRIC CABLE IN CONDUIT, SIGNAL NO. 14 3C	FOOT	105		105	
*	87900100	DRILL EXISTING FOUNDATION	EACH	1		1	
*	89500400	RELOCATE EXISTING PEDESTRIAN PUSH-BUTTON	EACH	1		1	
	X0301735	CONCRETE HEADWALL REPAIR	EACH	1	1		
	X0301993	REMOVE AND REINSTALL CONCRETE HEADWALL FOR PIPE DRAIN	EACH	1	1		
	X0322584	REVETMENT MAT REMOVAL	SQ YD	1121	1121		
*	X0323388	TRAFFIC COUNTER	EACH	1	1		

*= SPECIALTY ITEM

MODEL: $MODELNAME$
FILE NAME: $FILEL$

USER NAME = $USER$	DESIGNED -	REVISED -
	DRAWN -	REVISED -
PLOT SCALE = $SCALE$	CHECKED -	REVISED -
PLOT DATE = $DATE$	DATE -	REVISED -

STATE OF ILLINOIS
DEPARTMENT OF TRANSPORTATION

SUMMARY OF QUANTITIES

F.A.I. RTE.	SECTION	COUNTY	TOTAL SHEETS	SHEET NO.
474	72(1RS-3;(2-4)RS-2)	PEORIA	240	13
		CONTRACT NO. 68C45		
	ILLINOIS FED. AID PROJECT			

REV. 5/14/21 REV. 4/28/21 REV. 4/12/21

CODE NO.	ITEM	UNIT	TOTAL QUANTITY	CONSTRUCTION CODE		
				HIGHWAY	LIGHTING/SIGNAL	BRIDGE
				0006	0021	0047
				90% FED	90% FED	90% FED
				10% STATE	10% STATE	10% STATE
				URBAN	URBAN	URBAN
X0324028	GROUT FOR USE WITH RIPRAP	CU YD	42	42		
X0325893	CLEAN EXISTING END SECTION	EACH	1	1		
X0326401	BARRIER WALL REMOVAL	FOOT	100	100		
X0326662	CURED-IN-PLACE PIPE LINER, 24"	FOOT	213	213		
X0326665	CURED-IN-PLACE PIPE LINER, 42"	FOOT	162	162		
X0326763	REMOVE GRATING	EACH	5	5		
X0327770	REPLACE MEDIAN GRATE	EACH	1	1		
X0328001	REGENERATIVE AIR SWEEPER	SQ YD	462943	462943		
X0426200	DEWATERING	L SUM	1	1		
X1200073	MANHOLE REMOVAL	EACH	1	1		
X1200207	REMOVE AND RELAY PIPE CULVERTS (SPECIAL)	FOOT	8	8		
X2200020	FENCE REMOVAL AND REINSTALLATION	FOOT	228	228		
X2600002	RECOVERABLE DELINEATOR	EACH	472	472		
X2810210	STONE RIPRAP, CLASS A5 (SPECIAL)	TON	270	270		

CODE NO.	ITEM	UNIT	TOTAL QUANTITY	CONSTRUCTION CODE		
				HIGHWAY	LIGHTING/SIGNAL	BRIDGE
				0006	0021	0047
				90% FED	90% FED	90% FED
				10% STATE	10% STATE	10% STATE
				URBAN	URBAN	URBAN
X2810226	STONE RIPRAP, CLASS B3 (SPECIAL)	TON	147	147		
X2810228	STONE RIPRAP, CLASS B4 (SPECIAL)	TON	1198	1198		
X2810812	STONE DUMPED RIPRAP, CLASS B4 (SPECIAL)	TON	2059	2059		
X2810814	STONE DUMPED RIPRAP, CLASS B5 (SPECIAL)	TON	255	255		
X4400196	HOT - MIX ASPHALT SURFACE REMOVAL, SPECIAL	SQ YD	4202	4202		
X4401198	HOT-MIX ASPHALT SURFACE REMOVAL, VARIABLE DEPTH	SQ YD	4401	4401		
X5010523	REMOVE CONCRETE END SECTION	EACH	4	4		
X5015225	PIPE CULVERT REMOVAL (SPECIAL)	FOOT	46	46		
X5030225	CONCRETE STRUCTURES (SPECIAL)	CU YD	62	62		
X5420624	PIPE CULVERTS TO BE CLEANED 24"	FOOT	690	690		
X5420636	PIPE CULVERTS TO BE CLEANED 36"	FOOT	176	176		
X6050700	REMOVE INLET BOX	EACH	8	8		
X6320100	GUARDRAIL REMOVAL SPECIAL	FOOT	8734	8734		
X6350120	DELINEATOR REMOVAL	EACH	428	428		

	CODE NO.	ITEM	UNIT	TOTAL QUANTITY	CONSTRUCTION CODE		
					HIGHWAY	LIGHTING/SIGNAL	BRIDGE
					0006	0021	0047
					90% FED	90% FED	90% FED
					10% STATE	10% STATE	10% STATE
					URBAN	URBAN	URBAN
	X6370050	CONCRETE BARRIER WALL (SPECIAL)	FOOT	100	100		
	X7010216	TRAFFIC CONTROL AND PROTECTION (SPECIAL)	L SUM	1	1		
*	X7830060	GROOVING FOR RECESSED PAVEMENT MARKING, LETTERS AND SYMBOLS	SQ FT	329	329		
*	X7830070	GROOVING FOR RECESSED PAVEMENT MARKING 5"	FOOT	207853	207853		
*	X7830074	GROOVING FOR RECESSED PAVEMENT MARKING 7"	FOOT	22265	22265		
*	X7830076	GROOVING FOR RECESSED PAVEMENT MARKING 9"	FOOT	19730	19730		
*	X7830078	GROOVING FOR RECESSED PAVEMENT MARKING 13"	FOOT	2630	2630		
*	X7830090	GROOVING FOR RECESSED PAVEMENT MARKING 25"	FOOT	150	150		
*	X8040102	ELECTRIC SERVICE INSTALLATION, SPECIAL	EACH	1		1	
*	X8210402	LUMINAIRE MOUNTING BRACKET - SPECIAL	EACH	133		133	
*	X8760201	PEDESTRIAN PUSH-BUTTON POST	EACH	1		1	
	Z0001002	GUARDRAIL AGGREGATE EROSION CONTROL	TON	3009	3009		
	Z0001899	JACK AND REMOVE EXISTING BEARINGS	EACH	41			41
	Z0004556	HOT - MIX ASPHALT SURFACE REMOVAL (DECK)	SQ YD	4300			4300

*= SPECIALTY ITEM

MODEL: $MODELNAME$
FILE NAME: $FILEL$

USER NAME = $USER$	DESIGNED -	REVISED -
	DRAWN -	REVISED -
PLOT SCALE = $SCALE$	CHECKED -	REVISED -
PLOT DATE = $DATE$	DATE -	REVISED -

STATE OF ILLINOIS
DEPARTMENT OF TRANSPORTATION

SUMMARY OF QUANTITIES

F.A.I. RTE.	SECTION	COUNTY	TOTAL SHEETS	SHEET NO.
474	72(1)RS-3;(2-4)RS-2)	PEORIA	240	16
		CONTRACT NO. 68C45		
	ILLINOIS FED. AID PROJECT			

REV. 5/5/21 REV. 4/28/21

CODE NO.	ITEM	UNIT	TOTAL QUANTITY	CONSTRUCTION CODE		
				HIGHWAY	LIGHTING/SIGNAL	BRIDGE
				0006	0021	0047
				90% FED	90% FED	90% FED
				10% STATE	10% STATE	10% STATE
				URBAN	URBAN	URBAN
Z0013300	CONCRETE REMOVAL (SPECIAL)	SQ YD	5	5		
Z0013798	CONSTRUCTION LAYOUT	L SUM	1	1		
Z0016002	DECK SLAB REPAIR (FULL DEPTH, TYPE II)	SQ YD	11			11
Z0016200	DECK SLAB REPAIR (PARTIAL)	SQ YD	102			102
Z0016702	DETOUR SIGNING	L SUM	1	1		
Z0018500	DRAINAGE STRUCTURES TO BE CLEANED	EACH	12	12		
Z0021400	EXPANSION JOINT (SPECIAL)	FOOT	1286	1286		
Z0022800	FENCE REMOVAL	FOOT	254	254		
Z0025615	FURNISH AND INSTALL METAL SCREEN	EACH	13		13	
Z0034105	MATERIAL TRANSFER DEVICE	TON	95922	95922		
Z0041500	PLUG EXISTING CULVERTS	EACH	2	2		
Z0048665	RAILROAD PROTECTIVE LIABILITY INSURANCE	L SUM	1			1
Z0065730	SLOPE WALL SLURRY PUMPING	CU YD	81			81
Ø Z0076600	TRAINEES	HOUR	1,000	1,000		
Ø Z0076604	TRAINEES - TRAINING PROGRAM GRADUATE	HOUR	1,000	1,000		

Ø 0042

RESURFACING - MAINLINE, TABLE 1 OF 3

LOCATION	LENGTH	WIDTH	AREA	40600990 TEMPORARY RAMP	40600862 HMA SURF. REMOVAL, BUTT JOINT	X4401196 HMA SURF. REMOVAL, VARIABLE DEPTH	44#00153 HMA SURF. REMOVAL, 1"	44#0161 HMA SURF. REMOVAL, 3"	44#00165 HMA SURF. REMOVAL, 4" 3 LANE SECTION PL	3 LANE SECTION DL	3 LANE SECTION AUX.	DL IN 2 LANE DL	X4400196 HMA SURF. REMOVAL, SPECIAL	40605015 POLY. SMA BINDER COURSE IL 12.5 N80 MAIN LINE (DL/PL) * 26.5' WIDTH	AUXILLARY LANE 13' WIDTH	40603230 POLY. LEVELING BINDER COURSE (MACHINE METHOD), IL-4.75 N50 MAIN LINE (DL/PL) ** 25.5' WIDTH	AUXILLARY LANE 13'	40605034 POLY. SMA SURFACE COURSE, MIX "E", IL 12.5, N80 MAIN LINE 25' WIDTH (DL/PL)	AUXILLARY LANE 12.5' WIDTH	40600050 INCIDENTAL HMA SURFACING	40600295.0 POLY. BIT. MATERIALS (TACK COAT) RATES USED FOR CALCS. (LB/SQ FT) 0.08 3 APPL	2 APPL	1 APPL	Z0034105 MATERIAL TRANSFER DEVICE	X0328001 REGENERATIVE AIR SWEEPER
	FT.	FT.	SQ. YD.	1:80 SQ. YD.	1:480 SQ. YD.	SQ. YD.	SQ. YD.	SQ. YD.	13.5' SQ. YD.	12.5' SQ. YD.	13' SQ. YD.	13'	SQ. YD.	2" TON	2" TON	1" TON	1" TON	2" TON	2" TON	2" TON	LB.	LB.	LB.	TON	SQ.YD.
NORTHBOUND																										
NORTHBOUND I-474																										
STA. 418+52 TO 418+92	40.0	24.0	178.3		178.3								2.2	13.2		6.3		12.4			389.9			32.0	180.5
STA. 418+92 TO 419+93	100.7	24.0	268.5						151.0			145.4	5.6	33.2		16.0		31.3			652.3			80.5	302.0
STA. 419+93 TO 427+30	737.3	24.0	1,966.2						1,106.0			1,065.0	41.0	243.2		117.0		229.4			4777.9			589.5	2212.0
STA. 427+30 TO 427+50	20.0	24.0	53.3						30.0			28.9	1.1	6.6		3.2		6.2			128.0			16.0	60.0
STA. 427+50 TO 427+60	10.0	24.0	26.7		57.9								0.6	3.3		1.6		3.1			126.3			8.0	58.5
STA. 427+60 TO 428+00	40.0	24.0	106.7			228.4							2.2			6.3		12.4				332.2		18.8	230.7
STA. 428+00 TO 428+28 (BK)	27.6	24.0	71.7					154.9					1.5			4.4		8.6				223.3		13.0	156.5
Route 6 Exit (ROADWAY A)																										
STA. 157+10 TO 157+50	40.0	24.0	106.7		179.0								2.2	13.2		6.3		12.4						32.0	181.2
STA. 159+10 TO 166+43 (BK)	733.0	24.0	1,954.7						1,099.5			1,058.8	40.7	241.7		116.3		228.0			4749.8			586.1	2199.0
GORE AREA 158+10.98 TO 55+19.50			1,114.2				1,114.2													124.8			802.2		1114.2
I-474 Mainline																										
STA. 56+27 (AH) TO 56+45	18.0	24.0	48.0					103.0					1.0			2.9		5.6				149.8		8.5	104.0
STA. 56+45 TO 56+55	10.0	VAR	74.1		74.1								0.6			1.6		3.1				107.5		4.7	74.6
STA. 56+55 TO 58+58	203.0	Bridge Omission- 072-0113																								
STA. 58+58 TO 58+68	10.0	36.0	67.2		67.2								0.6			1.6	0.8	3.1	1.6			97.5		7.1	67.7
STA. 58+68 TO 58+97	29.0	36.0	116.0					130.9					1.6			4.6	2.3	9.0	4.5			190.8		20.5	132.5
STA. 58+97 TO 59+37	40.0	36.0	160.0			189.6							2.2			6.3	3.2	12.4	6.2			272.0		28.2	188.9
STA. 59+37 TO 59+47	10.0	36.0	45.8		45.8								0.6	3.3	1.6	1.6	0.8	3.1	1.6		100.2			12.0	46.4
STA. 59+47 TO 62+08	261.0	36.0	1,548.1						391.5	362.5	377.0		14.5	84.4	42.2	40.6	21.1	81.2	40.6		2474.3			310.2	1145.5
STA. 62+08 TO 62+48	40.0	36.0	168.9		168.9								2.2	12.9	6.5	6.3	3.2	12.4	6.2		369.6			47.7	171.1
STA. 62+48 TO 62+58	10.0	36.0	51.1																							
STA. 62+58 TO 62+88	30.0	36.0	126.7		126.7								1.7			4.8	2.4	9.3	4.7			184.8		16.5	128.3
STA. 62+88 TO 63+41	53.0	36.0	212.0					228.7					2.9			8.4	4.3	16.5	8.2			333.5		29.2	231.6
STA. 63+41 TO 63+51	10.0	36.0	61.3		61.3								0.6			1.6	0.8	3.1	1.6			89.1		5.5	61.9
STA. 63+51 TO 71+40	789.0	Bridge Omission- 072-0115																								
STA. 71+40 TO 71+50	10.0	36.0	59.0		59.0								0.6			1.6	0.8	3.1	1.6			85.7		5.5	59.5
STA. 71+50 TO 72+35	85.0	36.0	363.6					363.6					4.7			13.5	6.9	26.4	13.2			530.3		30.8	398.2
STA. 72+35 TO 72+65	30.0	36.0	126.7		126.7								1.7			4.8	2.4	9.3	4.7			184.8		16.5	128.4
STA. 72+65 TO 72+75	10.0	36.0	40.0																							
STA. 72+75 TO 73+15	40.0	36.0	160.0		160.0								2.2	12.9	6.5	6.2	3.2	12.4	6.2		369.6			41.3	171.1
STA. 73+15 TO 85+96	1,280.8	36.0	5,123.1						1,921.2	1,778.9	1,850.0		71.2	414.4	207.2	199.2	103.6	398.5	199.2		12141.8				5621.2	
STA. 85+96 TO 91+09	513.2	VAR	VAR						769.8	712.8	2,685.0		28.5	169.2	23.1	81.4	11.6	159.7	23.1		9063.7			445.0	4196.2	
STA. 91+09 TO 113+16	2,207.0	24.0	5,885.3						3,310.5		3,187.9		122.6	727.8		350.2		686.6			14301.4			1764.6	6621.0	
STA. 113+16 TO 113+26	10.0	24.0	26.7		28.9								0.6	3.3		1.6		3.1			63.6			8.0	29.4
STA. 113+26 TO 113+66	39.7	24.0	106.0			115.6							2.2			6.3		12.4				169.6		18.7	117.8
STA. 113+66 TO 114+14	48.3	24.0	128.7					140.1					2.7			7.7		15.0				205.6		22.7	142.8
STA. 114+14 TO 114+24	10.0	24.0	26.7		44.4								0.6			1.6		3.1				64.8		4.7	45.0
STA. 114+24 TO 115+36	112.0	Bridge Omission- 072-0117																								
STA. 115+36 TO 115+46	10.0	24.0	26.7		44.5								0.6			1.6		3.1				64.8		4.7	45.0
STA. 115+46 TO 115+94	48.0	24.0	128.0					137.6					2.7			7.6		14.9				201.8		22.5	140.1
STA. 115+94 TO 116+34	40.0	24.0	106.7			115.6							2.2			6.3		12.4				169.6		18.8	117.8
STA. 116+34 TO 116+44	10.0	24.0	26.7		28.9								0.6	3.3		1.6		3.1			63.6			8.0	29.4
STA. 116+44 TO 130+51	1,407.0	24.0	3,752.0						2,110.5			2,032.3	78.2	464.0		223.2		437.7			9117.4			1125.0	4221.0
STA. 130+51 TO 130+84	33.0	24.0	88.1				179.2		49.6			47.7	1.8	10.9		5.2		10.3		20.1	214.2			26.4	278.3
STA. 130+84 (U) TO 136+06	621.0	24.0	1,656.0						1,232.0			1,187.1	43.7	271.0		130.4		255.7			5325.5			657.1	2465.5
STA. 136+06 TO 186+92 (BK)	4,786.1	24.0	12,763.0						7,179.2			6,913.3	265.9	1,578.4		759.4		1,489.0			31014.3			3826.8	14358.4
STA. 186+91 (AH) TO 200+34	1,343.1	24.0	3,581.6						2,014.7			1,940.0	74.6	442.9		213.1		417.9			8703.4			1073.9	4029.3
GORE AREA 198+88.86 TO 199+98.05			184.0				184.0													20.6			132.5		184.0
STA. 200+34 TO 205+26	491.6	24.0	1,310.9						737.4	682.8	710.1		27.3	162.1		78.0		152.9			4660.4			393.1	2157.6
GORE AREA 205+25.60 TO 206+41.33			131.2				131.2													14.7			94.5		131.2
STA. 205+26 TO 206+41	115.7	24.0	308.6						173.6			167.2	6.4	38.2		18.4		36.0			749.9			92.5	347.2
STA. 206+41 TO 221+19	1,478.3	24.0	3,942.2						2,217.5			2,135.3	82.1	487.5		234.6		459.9			9237.4			1182.0	4434.9
STA. 221+19 TO 221+59	40.0	24.0	106.7		115.6								2.2	13.2		6.3		12.4			254.4			32.0	117.8
STA. 221+59 TO 221+68	8.7	24.0	23.2																							
STA. 221+68 TO 221+98	30.0	24.0	80.0		86.7								1.7			4.8		9.3				127.2		14.1	88.3
STA. 221+98 TO 222+48	50.0	24.0	133.3					144.4					2.8			7.9		15.6				4.0		23.5	147.2
STA. 222+48 TO 222+83	35.0	24.0	93.3					91.6					1.9			5.6		10.9				140.5		16.4	97.6
STA. 222+83 TO 222+93	10.0	24.0	26.7		48.6								0.6			1.6		3.1			63.6			8.0	29.4
STA. 222+93 TO 225+11	218.0	Bridge Omission- 072-0122																			19177.2			2366.2	8878.3
STA. 225+11 TO 225+21	10.0	24.0	26.7		49.7								0.6			1.6		3.1				72.4		4.7	50.3
STA. 225+21 TO 225+59	38.0	24.0	101.3				430.2						2.1			6.0		11.8				159.1		17.9	110.5
STA. 225+59 TO 226+09	50.0	24.0	133.3					108.4					2.8			7.9		15.6				4.0		23.5	147.2
STA. 226+09 TO 226+39	30.0	24.0	80.0		86.7			144.4					1.7			4.8		9.3				127.2		14.1	88.3
STA. 226+39 TO 226+47	8.0	24.0	21.3																							
STA. 226+47 TO 226+87	40.0	24.0	106.7		115.6								2.2	13.2		6.3		12.4			254.4			32.0	117.8
STA. 226+87 TO 249+00 (BK)	2,212.7	24.0	5,900.6						3,319.1			3,196.2	122.9	729.7		351.1		688.4			14338.5			1769.2	6638.2
STA. 248+99 (AH) TO 250+68	169.0	24.0	450.8						253.6			244.2	9.4	55.7		26.8		52.6			1095.4			135.2	507.1
STA. 250+68 TO 250+78	9.8	24.0	26.3		29.0								0.3	3.2		1.6		3.1			63.9			7.9	29.6
STA. 250+78 TO 251+18	40.2	24.0	107.1			116.1							2.2			6.4		12.5				170.4		18.9	118.4
STA. 251+18 TO 251+65	47.0	24.0	125.3					131.6					2.6			7.5		14.6				199.2		22.1	134.2
STA. 251+65 TO 251+75	10.0	24.0	26.7		45.3								0.6			1.6		3.1				66.1		4.7	45.9
STA. 251+75 TO 253+62	187.0	Bridge Omission- 072-0125																								
STA. 253+62 TO 253+72	10.0	24.0	26.7		44.9								0.6			1.6		3.1				65.4		4.7	45.4
STA. 253+72 TO 254+20	47.8	24.0	127.4					136.4					2.7			7.6		14.9				200.2		22.4	139.0
STA. 254+20 TO 254+60	40.2	24.0	107.3			115.6							2.2			6.4		12.5				169.6		18.9	117.8
STA. 254+60 TO 254+70	10.0	24.0	26.7		28.9								0.6	3.3		1.6		3.1			63.6			8.0	29.4
STA. 254+70 TO 284+29	3,956.4	24.0	7,891.8						4,499.3			4,374.3	164.4	934.0		469.6		920.7			19177.2			2366.2	8878.3
GORE AREA 284+29.44 TO 289+45.43			400.2				400.2													44.8		288.1			400.2
STA. 289+29 TO 299+45	1,015.2	24.0	2,707.1						1,522.7			1,466.3	56.4	334.8		161.1		315.8			6578.2			811.7	3045.5
GORE AREA 299+44.60 TO 303+04.79			419.7				419.7													47.0					419.7
STA. 299+45 TO 303+05	360.2	24.0	960.5						540.3			520.3	20.0	118.8		57.2		112.1			2334.0			288.0	1080.6
STA. 303+05 TO 332+17	2,912.2	24.0	7,765.9						4,368.3			4,206.5	161.8	960.4		462.1		906.0			18871.1			2326.5	8736.6
STA. 332+17 TO 332+48	31.0	24.0	82.7				10.9		46.5			44.8								3.5	197.2			0.0	122.2
STA. 332+48 TO 347+88	1,540.0	24.0	4,106.7						2,310.0			2,224.4	85.6	507.9		244.3		479.1			184.8			1231.3	4620.0
STA. 347+48 TO 347+88	40.0	24.0	106.7						60.0			57.8	2.2	13.2		6.3		12.4							
STA. 347+88 TO 348+58	70.0	24.0	186.7										3.9	23.1				21.8			8.4			44.9	3.9
STA. 348+58 TO 360+11	1,153.0	Bridge Omission- 072-0127																								
GORE AREA 360+08.69 TO 363+15.02			367.0		4.8		357.0													41.1			264.3		371.9
STA. 360+11 TO 360+21	10.0	24.0	26.7		46.1								0.6			1.6		3.1				67.2		4.7	46.7
STA. 360+21 TO 360+62	41.0	24.0	109.3					81.3					2.3			6.5		12.8				120.4		19.3	83.6
STA. 360+62 TO 361+02	40.0	24.0	106.7			115.7							2.2			6.3		12.4				169.9		18.8	118.0
STA. 361+02 TO 361+12	10.0	24.0	26.7		28.9								0.6	3.3		1.6		3.1			63.7			8.0	29.5
STA. 361+12 TO 363+16	203.7	24.0	543.2						305.5			294.2	11.3	67.2		32.3		63.4			1319.9			162.9	611.1
STA. 363+16 TO 372+93	977.0	24.0	2,605.4						1,465.5			1,411.2	54.3	322.2		155.0		304.0			6331.0			781.2	2931.0
GORE AREA 372+93 TO 376+05			418.6				418.6													46.9					418.6
STA. 372+93 TO 376+35	342.0	24.0	912.0						513.0			494.0	19.0	112.8		54.3		106.4			2216.2			273.4	1026.0
STA. 376+35 TO 376+45	10.0	24.0	26.7		48.1								0.6	3.3		1.6		3.1			105.0			8.0	48.6
STA. 376+45 TO 376+85	40.0	24.0	106.7			186.4							2.2			6.3		12.4				271.6		18.8	188.6
STA. 376+85 TO 377+34	49.0	24.0	130.7					219.5					2.7			7.8		15.2				320.0		23.0	222.2
STA. 377+34 TO 377+44	10.0	24.0	26.7		53.0								0.6			1.6		3.1				77.1		4.7	53.6
STA. 377+44 TO 379+57	212.5	Bridge Omission- 072-0130																								
STA. 379+57 TO 379+67	10.0	24.0	26.7		44.4								0.6			1.6		3.1				64.8		4.7	45.0
STA. 379+67 TO 379+98	31.0	24.0	82.7					85.8					1.7			4.9		9.6				126.0		14.6	87.3
STA. 379+98 TO 380+38	40.0	24.0	106.7			113.7							2.2			6.3		12.4				167.0		18.8	115.9
STA. 380+38 TO 380+48	10.0	24.0	26.7		28.9								0.6	3.3		1.6		3.1			63.6			8.0	29.4
STA. 380+48 TO 383+83	335.0	24.0	893.3						502.5			483.9	18.6	110.5		53.2		104.2			2170.8			267.9	1005.0
STA. 383+83 TO 383+93	10.0	24.0	26.7		28.9								0.6	3.3		1.6		3.1			63.6			8.0	29.5
STA. 383+93 TO 384+33	40.0	24.0	106.7			115.6							2.2			6.3		12.4				169.7		18.8	117.8
STA. 384+33 TO 384+66	33.0	24.0	88.0					92.4					1.8			5.2		10.3				139.7		15.5	94.2
STA. 384+66 TO 384+76	10.0	24.0	26.7		102.4								0.6			1.6		3.1				148.3		4.7	103.0
STA. 384+76 TO 393+36	860.0	Bridge Omission- 072-0132																								
STA. 393+36 TO 393+46	10.0	24.0	26.7		55.4								0.6			1.6		3.1				80.6		4.7	55.9
STA. 393+46 TO 393+92	46.0	24.0	122.7					132.6					2.6			7.3		14.3				194.6		21.6	135.2
STA. 393+92 TO 394+32	40.0	24.0	106.7			118.6							2.2			6.3		12.4				169.6		18.8	117.8
STA. 394+32 TO 394+42	10.0	24.0	26.7		28.9								0.6	3.3		1.6		3.1			63.6			8.0	29.4
STA. 394+42 TO 445+21	5,079.4	24.0	13,544.9						7,619.0			7,336.8	282.2	1,675.1		805.9		1,580.2			32914.2			4061.2	15238.1
STA. 445+21 TO 445+52	31.0	24.0	82.7				179.2		46.5			44.8	1.7	10.2		4.9		9.7		20.1	201.0			24.8	272.2
STA. 445+52 TO 449+08	355.6	24.0	948.3						533.4			513.7	19.8	117.3		56.4		110.6			2304.5			284.3	1066.9
STA. 449+08 (U) TO 449+28 (BK)	20.3	24.0	54.0						30.4			29.3	1.1	6.7		3.2		6.3			131.3			16.2	60.8
STA. 56+08 (AH) TO 56+23	15.6	24.0	41.5						23.3			22.5	0.9	5.1		2.5		4.8			100.8			12.4	46.7
STA. 56+23 TO 57+41	117.7	24.0	313.9						176.6			170.0	6.5	38.8		18.7		36.6			762.8			94.1	353.1
STA. 57+41 TO 59+13	172.0	24.0	458.7						258.0			248.4	9.6	56.7		27.3		53.5			1114.6			137.5	516.0
STA. 59+13 TO 60+47	134.0	24.0	357.3						201.0			193.6	7.4	44.2		21.3		41.7			868.3			107.1	402.0
STA. 60+47 TO 61+58	111.0	24.0	296.0						166.5			160.3	6.2	36.6		17.6		34.5			719.3			88.8	333.0
STA. 61+58 TO 61+68	10.0	24.0	26.7		28.9								0.6	3.3		1.6		3.1			63.7			8.0	29.5
STA. 61+68 TO 62+08	40.0	24.0	106.7			115.4							2.2			6.3		12.4				169.4		18.8	117.6
STA. 62+08 TO 62+55	47.0	24.0	125.3					132.2					2.6			7.5		14.6				194.1		22.1	134.8
STA. 62+55 TO 62+65	10.0	24.0	26.7		44.4								0.6			1.6		3.1				64.7		4.7	44.9
PAVEMENT TABLE 1 OF 3 SUB-TOTAL				0.0	2,654.5	1,640.3	3,424.2	2,763.3	53,195.6	3,536.9	8,810.0	44,359.1	2,080.4	11,816.6	287.1	5,925.5	167.6	11,650.0	323.3	383.5	354,536.5	7,940.4	1,583.6	38,553.5	122,344.3

*FOR THREE LANES USE 26' WIDTH
** FOR THREE LANES USE 25'

MODEL: Default
FILE NAME: pw:\\ildinroom.on.illinois.gov:PWIDOT\Documents\IDOT Offices\District 4\Projects\D4 68C45\CADData\DesignSheets.dgn

USER NAME = jetteam	DESIGNED -	REVISED -	
	DRAWN -	REVISED -	
PLOT SCALE = 100.0001 ' / in.	CHECKED -	REVISED -	
PLOT DATE = 3/19/2021	DATE -	REVISED -	

STATE OF ILLINOIS
DEPARTMENT OF TRANSPORTATION

SCHEDULE OF QUANTITIES

SCALE: SHEET 01 OF 21 SHEETS STA. TO STA.

F.A.I RTE.	SECTION	COUNTY	TOTAL SHEETS	SHEET NO.
474	72(1RS-3;(2-4)RS-2)	PEORIA	240	18
		CONTRACT NO. 68C45		
	ILLINOIS	FED. AID PROJECT		

RESURFACING - MAINLINE, TABLE 2 OF 3

LOCATION	LENGTH	WIDTH	AREA	40600990 TEMPORARY RAMP	40600982 HMA SURF. REMOVAL, BUTT JOINT	X4401198 HMA SURF. REMOVAL, VARIABLE DEPTH	44000153 HMA SURF. REMOVAL, 1"	44000161 HMA SURF. REMOVAL, 2"	44000165 HMA SURF. REMOVAL, 4"				X4401196 HMA SURF. REMOVAL, SPECIAL	40605015 POLY. SMA BINDER COURSE IL 12.5 N80		40603200 POLY. LEVELING BINDER COURSE (MACHINE METHOD), IL-4.75, N50		40605034 POLY. SMA SURFACE COURSE, MIX "E", IL 12.5, N80		40800650 INCIDENTAL HMA SURFACING	40600295.0 POLY. BIT. MATERIALS (TACK COAT)			Z8034105 MATERIAL TRANSFER DEVICE	X0328001 REGENERATIVE AIR SWEEPER
									3 LANE SECTION			DL IN 2 LANE		MAIN LINE	AUXILLARY LANE	MAIN LINE	AUXILLARY LANE	MAIN LINE	AUXILLARY LANE		RATES USED FOR CALCS. (LB/SQ FT)					
									PL	DL	AUX.	DL		26.5' WIDTH	13' WIDTH	25.5' WIDTH	13'	25' WIDTH	12.5' WIDTH		0.08					
				1:80	1:480				13.5'	12.5'	13'	13'		2"	2"	1"	1"	2"	2"		3 APPL	2 APPL	1 APPL			
	FT.	FT.	SQ. YD.	SQ. YD.	SQ. YD.	SQ. YD.	SQ. YD.	SQ. YD.	SQ. YD.				SQ. YD.	TON	TON	TON	TON	TON	TON	TON	LB.	LB.	LB.	TON	SQ.YD.
SOUTHBOUND																										
I-74 Ramp																										
STA. 519+33 TO 519+73	40	24.0	106.6		177.7								2.2	13.2		6.3		12.4			388.7			32.0	180.0
STA. 519+73 TO 520+84	111	24.0	295.1						166.0			159.8	6.1	36.5		17.6		34.4			717.0			88.5	331.9
STA. 520+84 TO 528+21 (BK)	737	24.0	1966.5						1106.2			1065.2	41.0	243.2		117.0		229.4			4778.7			589.6	2212.4
Roadway B																										
STA. 80+23 TO 80+63	40	24.0	107.0		178.2								2.2	13.2		6.4		12.5			389.7			32.1	180.4
STA. 80+63 TO 87+88 (BK)	725	24.0	1934.0						1087.9			1047.6	40.3	239.2		115.1		225.6			4699.7			579.9	2175.8
GORE AREA 80+63.31 TO 55+54			1326.4				1326.4													148.6			955.0		1326.4
I-474 Mainline																										
STA. 55+39 (AH) TO 55+83	44	VAR	457.8						66.5	61.6	64.1		2.5	14.6		7.0		13.8			420.5			35.5	194.7
STA. 55+83 TO 55+93	10	VAR	29.5		60.1								0.5	3.2		1.5		3.0			131.0			7.7	60.7
STA. 55+93 TO 56+33	40	VAR	237.7			237.7							2.2			6.3		12.4				345.6		18.8	240.0
STA. 56+33 TO 56+81	48	VAR	275.3					275.3					2.7			7.6		14.9				400.2		22.5	277.9
STA. 56+81 TO 56+91	10	VAR	76.2		76.2								0.6			1.6		3.1				110.5		4.7	76.7
STA. 56+91 TO 58+92	201	Bridge Omission- 072-0112																								
STA. 58+92 TO 59+02	10	36.0	27.8		71.6								0.6			1.6	0.8	3.2	1.6			104.0		7.3	72.2
STA. 59+02 TO 59+23	21	36.0	1219.0					109.7					1.1			3.3	1.7	6.4	3.2			159.6		14.6	110.8
STA. 59+23 TO 59+63	40	36.0	23.3			204.6							2.2			6.3	3.2	12.4	6.2			297.9		28.2	206.9
STA. 59+63 TO 59+73	10	36.0	50.5		50.5								0.6	3.2	1.6	1.6	0.8	3.1	1.6		110.3			11.9	51.1
STA. 59+73 TO 62+41	269	36.0	1074.2						402.8	373.0	387.9		14.9	86.9	43.4	41.8	21.7	83.5	41.8		2545.8			319.1	1178.6
STA. 62+41 TO 62+81	40	36.0	172.7		172.7								2.2	12.9	6.4	6.2	3.2	12.4	6.2		377.7			47.3	174.9
STA. 62+81 TO 62+89	8	36.0	33.2																							
STA. 62+89 TO 63+19	30	36.0	127.0		127.0								1.7			4.7	2.4	9.3	4.7			185.3		21.1	128.7
STA. 63+19 TO 63+79	60	36.0	249.0					249.0					3.3			9.2	4.8	18.5	9.2			361.9		41.8	251.3
STA. 63+79 TO 63+89	10	36.0	61.4		61.4								0.6			1.6	0.8	3.2	1.6			89.3		7.2	62.0
STA. 63+89 TO 71+16	727	Bridge Omission- 072-0114																								
STA. 71+16 TO 71+26	10	36.0	20.0		59.4								0.6			1.6	0.8	3.1	1.6			86.3		7.0	59.9
STA. 71+26 TO 72+17	91	36.0	378.5					378.5					5.1			14.2	7.4	28.3	14.2			552.3		64.0	383.6
STA. 72+17 TO 72+47	30	36.0	126.5		126.5								1.7			4.6	2.4	9.3	4.6			184.5		20.9	128.2
STA. 72+47 TO 72+55	8	36.0	32.9																							
STA. 72+88 TO 72+98	40	56.0	165.7		168.7								2.2	12.9	6.8	6.2	3.2	12.4	6.2		589.1			57.8	170.9
STA. 72+95 TO 80+44	749	26.0	2646.7						1123.4	1040.1	1081.7		41.6	242.3	121.2	116.5	60.6	233.0	116.5		7092.6			890.0	3286.8
STA. 80+44 TO 85+95	551	VAR	VAR						826.2	765.0	422.0		30.6	178.2	47.3	85.7	23.6	171.4	47.3					553.4	2043.8
STA. 85+95 TO 113+07	2712	24.0	7231.7						4067.8			3917.2	150.7	894.3		430.3		843.7			17573.0			2168.3	8135.6
STA. 113+07 TO 113+17	10	24.0	26.7		28.9								0.6	3.3		1.6		3.1			63.6			8.0	29.4
STA. 113+17 TO 113+57	40	24.0	106.7			115.6							2.2			6.3		12.4				169.6		18.8	117.8
STA. 113+57 TO 114+06	49	24.0	131.5					142.4					2.7			7.8		15.3				209.0		23.2	145.2
STA. 114+06 TO 114+16	10	24.0	26.7		44.4								0.6			1.6		3.1				64.8		4.7	45.0
STA. 114+16 TO 115+42	126	Bridge Omission- 072-0116																								
STA. 115+42 TO 115+52	10	24.0	26.7		44.4								0.6			1.6		3.1				64.8		4.7	45.0
STA. 115+52 TO 115+98	46	24.0	122.7					122.7					2.6			7.3		14.3				194.7		21.6	135.2
STA. 115+98 TO 116+38	40	24.0	106.7			115.6							2.2			6.3		12.4				169.6		18.8	117.8
STA. 116+38 TO 116+48	10	24.0	26.7		28.9								0.6	3.3		1.6		3.1			63.6			8.0	29.4
STA. 116+48 TO 130+51	1403	24.0	3741.6						2104.7			2026.7	78.0	462.7		222.6		436.5			9092.2			1121.9	4209.3
STA. 130+51 TO 130+84	33	24.0	87.8						49.4			47.6	1.8	10.9		5.2		10.2			213.5			26.3	98.8
STA. 130+84 TO 186+69	5585	24.0	14893.2						8377.4			8067.2	310.5	1841.6		886.1		1737.5			36190.5			4465.5	16754.9
GORE AREA 186+69.14 TO 190+43.51			501.4				501.4													56.2			361.0		501.4
STA. 186+69 TO 186+92 (BK)	23	24.0	61.0						34.3			33.0	1.3	7.5		3.6		7.1			148.2			18.3	68.6
STA. 186+91 (AH) TO 190+44	353	24.0	940.3						528.9			509.3	19.6	116.3		55.9		109.7			2285.0			281.9	1057.9
STA. 190+44 TO 213+16	2273	24.0	6060.9						3409.3			3283.0	126.3	749.5		360.6		707.1			14728.1			1817.3	6818.6
GORE AREA 213+16.36 TO 218+72.06			456.9				456.9													51.2			329.0		456.9
STA. 213+16 TO 218+72	556	24.0	1481.9						833.6			802.7	30.9	183.3		88.2		172.9			3600.9			444.3	1667.1
STA. 218+72 TO 220+90	218	24.0	580.8						326.7			314.6	12.1	71.8		34.6		67.8			1411.3			174.1	653.4
STA. 220+90 TO 221+30	40	24.0	106.7		168.2								2.2	13.2	6.7	8.8	3.4	17.4	6.5		4.8			49.5	170.4
STA. 221+30 TO 221+38	8	24.0	21.3																							
STA. 221+38 TO 221+68	30	24.0	80.2		123.9								1.7			4.8	2.5	9.4	4.9		271.3			16.6	125.6
STA. 221+68 TO 222+18	50	24.0	133.3					144.4					2.8			7.9	4.2	21.8	8.1		6.0			33.9	147.2
STA. 222+18 TO 222+51	33	24.0	88.0					127.2					1.8			7.3	2.8	10.3	5.3			185.8		20.3	129.0
STA. 222+51 TO 222+61	10	24.0	26.7		55.8								0.6			1.6	0.8	3.1	1.6			81.1		5.5	56.3
STA. 222+61 TO 224+49	188	Bridge Omission- 072-0121																								
STA. 224+49 TO 224+59	10	24.0	26.7		50.3								0.6			1.6		3.1				73.2		4.7	50.8
STA. 224+59 TO 224+99	40	24.0	107.0					134.0					2.2			6.4		12.6				196.2		19.0	136.2
STA. 224+99 TO 225+49	50	24.0	133.3					144.4					2.8			7.9		15.6				4.0		23.5	147.2
STA. 225+49 TO 225+79	30	24.0	80.0		97.2								1.7			4.8		9.3				142.3		14.1	98.8
STA. 225+79 TO 225+87	7	24.0	19.8																							
STA. 225+87 TO 226+27	40	24.0	106.7		125.8								2.2	13.2		6.3		12.4			276.5			32.0	128.0
STA. 226+27 TO 249+00 (BK)	2273	24.0	6061.0						3409.3			3283.0	126.3	749.5		360.6		707.1			14728.2			1817.3	6818.6
STA. 248+99 (AH) TO 250+53	154	24.0	410.8						231.1			222.5	8.6	50.8		24.4		47.9			998.2			123.2	462.1
STA. 250+53 TO 250+63	10	24.0	26.5		28.9								0.6	3.3		1.6		3.1			63.6			8.0	29.4
STA. 250+63 TO 251+03	40	24.0	105.6			115.7							2.2			6.3		12.3				169.8		18.6	117.9
STA. 251+03 TO 251+49	46	24.0	123.9					136.9					2.6			7.4		14.5				200.9		21.8	139.5
STA. 251+49 TO 251+59	10	24.0	26.7		45.4								0.6			1.6		3.1				66.1		4.7	45.9
STA. 251+59 TO 253+42	183	Bridge Omission - 072-0124																								
STA. 253+42 TO 253+52	10	24.0	26.7		44.9								0.6			1.6		3.1				65.4		4.7	45.4
STA. 253+52 TO 253+99	47	24.0	124.7					135.3					2.6			7.4		14.6				198.5		22.0	137.9
STA. 253+99 TO 254+39	40	24.0	107.3			115.6							2.2			6.4		12.5				169.7		18.9	117.8
STA. 254+39 TO 254+49	10	24.0	26.7		28.9								0.6	3.3		1.6		3.1			63.6			8.0	29.4
STA. 254+49 TO 285+53	3105	24.0	8279.1						4837.0			4404.5	172.3	1023.9		492.6		965.9			20118.3			2482.4	9314.0
GORE ARE 285+53.68 TO 289+64.11			485.9				485.9													54.4			349.8		485.9
STA. 285+54 TO 289+64	410	24.0	1093.6						615.2			592.4	22.8	135.2		65.1		127.6			2657.5			327.9	1230.3
STA. 289+64 TO 301+93	1229	24.0	3276.8						1843.2			1774.9	68.3	405.2		195.0		382.3			7942.6			982.5	3686.4
GORE AREA 301+92.91 TO 306+30.84			261.8				261.8													29.3			188.5		261.8
STA. 301+93 TO 349+19	4726	24.0	12602.7						7089.0			6826.4	262.6	1558.5		749.9		1470.3			30624.5			3778.7	14178.0
STA. 349+19 TO 349+59	40	24.0	106.7						60.0			57.8	2.2	13.2		6.3		12.4			4.8			32.0	120.0
STA. 349+59 TO 350+30	71	24.0	189.3										3.9	23.4				22.1			8.5			45.5	3.9
STA. 350+30 TO 361+19	1089	Bridge Omission- 072-0128																								
STA. 361+19 TO 361+34	15	24.0	40.0		47.6								0.8			2.4		4.7				69.8		7.0	48.5
GORE AREA 361+34 TO 363+08			1066.6		31.3		1066.6													119.5			767.9		1097.8
STA. 361+34 TO 361+57	23	24.0	60.5					128.6					1.3			3.6		7.1				186.9		10.7	129.8
STA. 361+57 TO 361+97	40	24.0	106.8			117.2							2.2			6.4		12.5				172.0		18.8	119.5
STA. 361+97 TO 362+07	10	24.0	26.9		29.5								0.6	3.3		1.6		3.1			65.0			8.1	30.1
STA. 362+07 TO 363+08	101	24.0	269.8						151.8			146.1	5.6	33.4		16.1		31.5			655.6			80.9	303.5
STA. 363+08 TO 372+50	942	24.0	2512.2						1413.1			1360.8	52.3	310.7		149.5		293.1			6104.5			753.2	2826.2
GORE AREA 372+50.06 TO 376+05.05			298.2				298.2													28.9			189.9		298.2
STA. 372+50 TO 376+09	359	24.0	957.2						538.4			518.5	19.9	118.4		57.0		111.7			2325.9			287.0	1076.8
STA. 376+09 TO 376+36	27	24.0	72.0						40.5			39.0	1.5	8.9		4.3		8.4			175.0			21.6	81.0
STA. 376+36 TO 376+46	10	24.0	26.7		47.9								0.6	3.3		1.6		3.1			104.6			8.0	48.4
STA. 376+46 TO 376+86	40	24.0	106.7			189.2							2.2			6.3		12.4				275.7		18.8	191.5
STA. 376+86 TO 377+33	47	24.0	124.3					115.5					2.6			7.4		14.5				314.1		21.9	218.1
STA. 377+33 TO 377+43	10	24.0	27.7		56.5								0.6			1.7		3.2				82.1		4.9	57.0
STA. 377+43 TO 379+57	214	Bridge Omission- 072-0129																								
STA. 379+57 TO 379+67	10	24.0	26.7		52.0								0.6			1.6		3.1				75.6		4.7	52.5
STA. 379+67 TO 379+99	33	24.0	87.1					132.2					1.8			5.2		10.2				192.9		15.3	134.0
STA. 379+99 TO 380+39	40	24.0	106.7			157.9							2.2			6.3		12.4				230.6		18.8	160.1
STA. 380+39 TO 380+49	10	24.0	26.0		38.9								0.5	3.2		1.5		3.0			85.2			7.8	39.5
STA. 380+49 TO 384+08	359	24.0	957.0						538.3			518.4	19.9	118.4		56.9		111.7			2325.6			287.0	1076.7
STA. 384+08 TO 384+18	10	24.0	26.6		29.8								0.6	3.3		1.6		3.1			65.6			8.0	30.4
STA. 384+18 TO 384+58	40	24.0	106.7			117.4							2.2			6.3		12.3				172.3		18.6	117.7
STA. 384+58 TO 384+90	32	24.0	84.9					91.2					1.8			5.1		9.9				133.9		15.0	93.0
STA. 384+90 TO 385+00	10	24.0	27.3		46.3								0.6			1.6		3.2				67.7		4.8	47.0
STA. 385+00 TO 392+63	763	Bridge Omission- 072-0131																								0.0
STA. 392+63 TO 392+76	13	24.0	35.0		71.2								0.7			2.1		4.1				103.5		6.2	71.9
STA. 392+76 TO 393+24	48	24.0	128.0					115.0					2.7			7.6		14.9				313.5		22.3	217.7
STA. 393+24 TO 393+64	40	24.0	106.9			173.7							2.2			6.4		12.5				253.3		18.8	175.9
STA. 393+64 TO 393+74	10	24.0	26.5		42.9								0.6	3.3		1.6		3.1			93.8			7.9	43.4
STA. 393+74 TO 445+21	5147	24.0	13726.3						7721.0			7435.1	286.0	1697.5		816.7		1601.4			33354.8			4115.6	15442.1
STA. 445+21 TO 445+52	31	24.0	82.7						46.5			44.8	1.7	10.2		4.9		9.7			201.0			24.8	93.1
STA. 445+52 TO 449+08	356	24.0	948.3						533.4			513.7	19.8	117.3		56.4		110.6			2304.5			284.3	1066.9
STA. 449+08 TO 110+28 (BK)	20	24.0	53.3						30.0			28.9	1.1	6.6		3.2		6.2			129.6			16.0	60.0
STA. 56+08 (AH) TO 57+10	102	24.0	272.7						153.4			147.7	5.7	33.7		16.2		31.8			662.7			81.8	306.8
STA. 57+10 TO 58+92	182	24.0	485.3						273.0			262.9	10.1	60.0		28.9		56.6			1179.4			145.5	546.0
STA. 58+92 TO 60+54	162	24.0	432.0						243.0			234.0	9.0	53.4		25.7		50.4			1049.8			129.5	486.0
STA. 60+54 TO 61+83	129	24.0	344.0						193.5			186.3	7.2	42.5		20.5		40.1			833.9			102.9	387.0
STA. 61+83 TO 61+93	10	24.0	26.7		28.9								0.6	3.3		1.6		3.1			63.7			8.0	29.5
STA. 61+93 TO 62+33	40	24.0	106.7			115.4							2.2			6.3		12.4				169.4		18.8	117.6
STA. 62+33 TO 62+71	38	24.0	101.3					109.5					2.1			6.0		11.8				160.7		17.9	111.6
STA. 62+71 TO 62+81	10	24.0	25.4		44.5								0.5			1.5		3.0				64.9		4.5	45.1
AT STAGED CONSTRUCTION JOINT SEGMENTS				62.2																						
PAVEMENT TABLE 2 OF 3 SUB-TOTAL				62.2	2,813.3	1,775.7	4,357.1	3,000.7	54,291.8	2,239.7	1,955.7	49,951.6	2,121.9	12,067.7	233.1	6,047.6	151.3	11,893.9	292.8	488.0	236,968.3	8,341.9	3,137.1	30,660.0	122,507.6

*FOR THREE LANES USE 26' WIDTH

* FOR THREE LANES USE 25'

NODEL: Default
FILE NAME: pw:\\dunroom.cot.illinois.gov:PWIDOT\Documents\IDOT Offices\District 4\Projects\D4 68C45\CADData\Design\Sheets\Res.dgn

USER NAME = jetteam	DESIGNED -	REVISED -	
	DRAWN -	REVISED -	
PLOT SCALE = 100.0001 ' / in.	CHECKED -	REVISED -	
PLOT DATE = 3/19/2021	DATE -	REVISED -	

STATE OF ILLINOIS
DEPARTMENT OF TRANSPORTATION

SCHEDULE OF QUANTITIES

SCALE: | SHEET 02 OF 21 SHEETS | STA. TO STA.

F.A.I RTE.	SECTION	COUNTY	TOTAL SHEETS	SHEET NO.
474	72(1RS-3;(2-4)RS-2)	PEORIA	240	19
		CONTRACT NO. 68C45		
	ILLINOIS	FED. AID PROJECT		

RESURFACING - MAINLINE, TABLE 3 OF 3

LOCATION	LENGTH	WIDTH	AREA	40600990 TEMPORARY RAMP	40600982 HMA SURF. REMOVAL, BUTT JOINT	X4401198 HMA SURF. REMOVAL, VARIABLE DEPTH	44000153 HMA SURF. REMOVAL, 1"	44000161 HMA SURF. REMOVAL, 3"	44000165 HMA SURF. REMOVAL, 4"	X4400196 HMA SURF. REMOVAL, SPECIAL	40605015 POLY. SMA BINDER COURSE IL 12.5 N80		40603200 POLY. LEVELING BINDER COURSE (MACHINE METHOD), IL-4.75, N50		40605034 POLY. SMA SURFACE COURSE, MIX "E", IL 12.5, N80		40800050 INCIDENTAL HMA SURFACING	40600295 POLY. BIT. MATERIALS (TACK COAT)			Z0034105 MATERIAL TRANSFER DEVICE	X0328001 REGENERATIVE AIR SWEEPER
											MAIN LINE (DL/PL)	RAMP	MAIN LINE (DL/PL)	RAMP	MAIN LINE	RAMP		RATES USED FOR CALCS. (LB/SQ FT)				
											* 26.5' WIDTH	17.5' WIDTH	** 25.5' WIDTH	17.5	25' WIDTH (DL/PL)	17' WIDTH		0.08				
				1:80	1:480				17.5'		2"	2"	1"	1"	2"	2"	2"	3 APPL	2 APPL	1 APPL		
	FT.	FT.	SQ. YD.	SQ. YD.	SQ. YD.	SQ. YD.	SQ. YD.	SQ. YD.	SQ. YD.	SQ. YD.	TON	TON	TON	TON	TON	TON	TON	LB.	LB.	LB.	TON	SQ.YD.
Maxwell Interchange																						
RAMP A STA. 0.0 TO 285.0	285.0	VAR	293.2						293.2			32.8		16.4		31.1		633.3			80.4	293.2
RAMP A STA. 285.0 TO 679.0	394.0	16.0	6,304.0						766.1			85.8		42.9		83.4		1,654.8			212.1	766.1
RAMP A STA. 679.0 TO 684.0	5.0	16.0	80.0		29.9							1.1		0.5		1.1	0.2	64.6			2.9	29.9
RAMP D STA. 72.7 TO 214.0	141.3	16.0	2,260.5						274.7			30.8		15.4		29.9		593.4			76.0	274.7
RAMP D STA. 214.0 TO 219.0	5.0	16.0	80.0		17.2							1.1		0.5		1.1	0.2	37.2			2.9	17.2
RAMP E STA. 2,245.0 TO 2,250.0	5.0	16.0	80.0		24.4							1.1		0.5		1.1	0.2	52.8			2.9	24.4
RAMP E STA. 2,250.0 TO 2,871.0	621.0	16.0	9,936.0						1,207.5			135.2		67.6		131.4		2,608.2			334.2	1,207.5
RAMP E STA. 2,871.0 TO 3,021.0	150.0	VAR	252.2						252.2			28.2		14.1		26.5		544.8			68.9	252.2
RAMP G STA. 1,315.0 TO 1,320.0	5.0	16.0	80.0		17.2							1.1		0.5		1.1	0.2	37.2			2.9	17.2
RAMP G STA. 1,320.0 TO 1,433.8	113.8	16.0	1,820.6						221.3			24.8		12.4		24.1		477.9			61.2	221.3
AIRPORT ROAD INTERCHANGE																						
RAMP A STA. 0.0 TO 303.0	303.0	16.0	4,848.0						341.6			38.3		19.1		34.7		737.8			92.1	341.6
RAMP A STA. 303.0 TO 662.0	359.0	16.0	5,744.0						698.1			78.2		39.1		75.9		1,507.8			193.2	698.1
RAMP A STA. 662.0 TO 667.0	5.0	16.0	80.0		14.4							1.1		0.5		1.1	0.2	31.2			2.7	14.4
RAMP B STA. 2,242.0 TO 2,247.0	5.0	16.0	80.0		14.4							1.1		0.5		1.1	0.2	31.2			2.7	14.4
RAMP B STA. 2,247.0 TO 2,682.0	435.0	16.0	6,960.0						845.8			94.7		47.4		92.0		1,827.0			234.1	845.8
RAMP B STA. 2,682.0 TO 3,408.1	726.1	16.0	11,617.4						829.3			92.9		46.4		80.8		1,791.2			220.1	829.3
RAMP C STA. 1,177.0 TO 1,182.0	5.0	16.0	80.0		14.4							1.1		0.5		1.1	0.2	31.2			2.7	14.4
RAMP C STA. 1,182.1 TO 1,732.0	549.9	16.0	8,798.9						1,069.3			119.8		59.9		116.3		2,309.7			296.0	1,069.3
RAMP C STA. 1,732.0 TO 2,496.1	764.1	16.0	12,225.3						660.0			73.9		37.0		73.7		1,425.6			184.6	660.0
RAMP D STA. 0.0 TO 271.0	271.0	16.0	4,336.0						286.0			32.0		16.0		29.4		617.7			77.4	286.0
RAMP D STA. 271.0 TO 675.0	404.0	16.0	6,464.0						785.6			88.0		44.0		85.5		1,696.8			217.4	785.6
RAMP D STA. 675.0 TO 680.0	5.0	16.0	80.0		14.4							1.1		0.5		1.1	0.2	31.2			2.9	14.4
US 24 INTERCHANGE																						
RAMP A STA. 1,908.0 TO 1,913.0	5.0	16.0	80.0		14.4							1.1		0.5		1.1	0.2	31.2			2.9	14.4
RAMP A STA. 1,913.0 TO 2,128.8	215.8	16.0	3,453.0						419.6			47.0		23.5		45.7		906.4			116.2	419.6
RAMP A STA. 2,128.8 TO 2,138.8	10.0	16.0	159.8		18.9							2.1		1.1		2.1		40.8			5.3	18.9
RAMP A STA. 2,138.8 TO 2,178.8	40.0	16.0	640.0			75.6						8.5		4.2		8.5			108.8		21.2	75.6
RAMP A STA. 2,178.8 TO 2,213.0	34.2	16.0	547.2					68.9				7.7		3.9		7.7			99.2		19.3	68.9
RAMP A STA. 2,213.0 TO 2,227.0	14.0	16.0	224.0		32.9							3.7		1.8		3.7			47.4		9.2	32.9
RAMP B STA. 781.0 TO 791.0	10.0	16.0	160.5		28.4							3.2		1.6		3.2			40.9		7.9	28.4
RAMP B STA. 791.0 TO 831.0	40.0	16.0	640.0					79.7				8.9		4.5		8.9			114.7		22.3	79.7
RAMP B STA. 831.0 TO 851.0	20.0	16.0	320.0			40.4						4.5		2.3		4.5			58.2		11.3	40.4
RAMP B STA. 851.0 TO 861.0	10.0	16.0	160.0		20.7							2.3		1.2		2.3		44.7			5.8	20.7
RAMP D STA. 700.0 TO 718.7	18.7	16.0	299.7		41.8							4.7		2.3		4.7			60.2		11.7	41.8
RAMP D STA. 718.7 TO 737.0	18.3	16.0	292.3					59.0				6.6		3.3		6.6			85.0		16.5	59.0
RAMP D STA. 737.0 TO 777.0	40.0	16.0	640.0			82.4						9.2		4.6		9.2			118.6		23.1	82.4
RAMP D STA. 777.0 TO 787.0	10.0	16.0	160.0		20.4							2.3		1.1		2.3		44.0			5.7	20.4
RAMP D STA. 787.0 TO 1,003.0	216.0	16.0	3,456.0						420.0			47.0		23.5		45.7		907.2			116.3	420.0
RAMP D STA. 1,003.0 TO 1,008.0	5.0	16.0	80.0		14.4							1.1		0.5		1.1	0.2	31.2			2.7	14.4
RAMP E STA. 1,476.0 TO 1,481.0	5.0	16.0	80.0		14.4							1.1		0.5		1.1	0.2	31.2			2.7	14.4
RAMP E STA. 1,480.9 TO 1,860.0	379.1	16.0	6,065.3						737.1			82.6		41.3		80.2		1,592.1			204.0	737.1
RAMP F STA. 313.0 TO 657.0	344.0	16.0	5,504.0						668.9			74.9		37.5		72.8		1,444.8			185.1	668.9
RAMP F STA. 657.0 TO 662.0	5.0	16.0	80.0		14.4							1.1		0.5		1.1	0.2	31.2			2.7	14.4
PAVEMENT TABLE 3 OF 3 SUB-TOTALS				0.0	367.4	198.3	0.0	207.6	10,776.2		0.0	0.0	1,283.7	0.0	641.9	0.0	1,235.4	2.9	23,847.4	733.0	0.0	3,162.4	11,549.5
PAVEMENT TABLE 1 OF 3 SUB-TOTALS				0.0	2,654.5	1,640.3	3,424.2	2,763.3	53,195.6	3,536.9 8,810.0 44,359.1	2,080.4	11,816.6	287.1	5,925.5	167.6	11,650.0	323.2	383.5	234,526.5	7,940.4	1,581.6	28,552.5	122,344.3
PAVEMENT TABLE 2 OF 3 SUB-TOTALS				62.2	2,813.3	1,775.7	4,357.1	3,000.7	54,291.8	2,239.7 1,955.7 49,951.6	2,121.9	12,067.7	233.1	6,047.6	151.3	11,893.9	292.8	488.0	236,968.3	8,341.9	3,137.1	30,660.0	122,507.6
PAVEMENT TABLE TOTAL				62	5,835	3,614	7,781	5,972	229,117		4,202	25,688		12,934		25,395		874	517,076			62,375	256,401
PROJECT TOTAL				325	6,868	4,401	7,781	5,972	229,117		4,202	25,688		16,639		31,498		953	814,497			95,922	462,943

MODEL: Default
FILE NAME: pw:\\dbanroom.cot.illinois.gov:PWIDOT\Documents\IDOT Offices\District 4\Projects\D4 68C45\CADData\DesignSheets.dgn

USER NAME = jetteam	DESIGNED -	REVISED -	
	DRAWN -	REVISED -	
PLOT SCALE = 100.0001 ' / in.	CHECKED -	REVISED -	
PLOT DATE = 3/19/2021	DATE -	REVISED -	

STATE OF ILLINOIS
DEPARTMENT OF TRANSPORTATION

SCHEDULE OF QUANTITIES

SCALE: | SHEET 03 OF 21 SHEETS | STA. | TO STA.

F.A.I RTE.	SECTION	COUNTY	TOTAL SHEETS	SHEET NO.
474	72[1RS-3;(2-4)RS-2]	PEORIA	240	20
		CONTRACT NO. 68C45		
	ILLINOIS	FED. AID PROJECT		

RAMP SCHEDULE

LOCATION	LENGTH	WIDTH	AREA	40600990 TEMPORARY RAMP	40600982 HMA SURF. REMOVAL, BUTT JOINT	44000152 HMA SURFACE REMOVAL, 3/4" DRIVING LANE & INSIDE SHOULDER	44000152 HMA SURFACE REMOVAL, 3/4" OUTSIDE SHOULDER	44000163 HMA SURFACE REMOVAL, 3.5" DRIVING LANE & INSIDE SHOULDER	44000163 HMA SURFACE REMOVAL, 3.5" OUTSIDE SHOULDER	44000157 HMA SURFACE REMOVAL, 2"	X4401198 HMA SURFACE REMOVAL, VARIABLE DEPTH	40603200 POLYMERIZED HOT-MIX ASPHALT BINDER COURSE, IL-4.75, N50	40604172 POLYMERIZED HOT-MIX ASPHALT SURFACE COURSE, IL-9.5, MIX "E", N70	40603208 POLYMERIZED HOT-MIX ASHPALT BINDER COURSE, IL-9.5, N70	48203100 HMA SHOULDERS	48203009 HOT-MIX ASPHALT SHOULDERS, 3"	48203013 HMA SHOULDERS, 4"	40800050 INCIDENTAL HMA SURFACING	40600295 POLY. BIT. MATERIALS (TACK COAT) RATES USED FOR CALCS (LB/SQ FT)	20034105 MATERIAL TRANSFER DEVICE	X0328001 REGENERATIVE AIR SWEEPER
																			0.08		
				1:80	1:480							1"	2"	2"	2"			2"	2 APPL		
	FT.	FT.	SQ. YD.	SQ. YD.	SQ. YD.	SQ. YD.		SQ. YD.		SQ. YD.	SQ. YD.	TON	TON	TON	TON	SQ YD	SQ YD	TON	LB	TON	SQ.YD.
MAXWELL INTERCHANGE																					
RAMP A STA. 06+79 TO 07+04	25.0	16	44.4	20.2	74.2							3.2	6.4			16.7			106.8	9.6	74.2
STA. 07+04 TO 21+58	1454.0	16	2584.9			3311.9	969.3					185.5	370.9			969.3			6165.0	556.4	4281.2
STA. 21+58 TO 21+63	5.0	16	8.9		14.4							0.6	1.3			3.3			20.8	1.9	14.4
STA. 21+63 TO 22+03	40.0	16	71.1								119.6		10.2		5.0				172.2	15.2	119.6
STA. 21+63 TO 26+86	523.0	16	929.8							929.8			136.7		39.1				1338.9	175.7	929.8
STA. 26+86 TO 26+96	10.0	16	17.8		24.4								2.0		0.7				35.2	2.7	24.4
RAMP D STA. 02+14 TO 02+39	25.0	16	44.4	20.2	75.1							3.2	6.4			16.7			108.2	9.6	75.1
STA. 02+39 TO 12+69	1030.0	16	1831.1			2346.1	686.7					131.4	262.8			686.7			4367.2	394.1	3032.8
STA. 12+69 TO 12+74	5.0	16	8.9		14.4							0.6	1.3			3.3			20.8	1.9	14.4
STA. 12+74 TO 13+14	40.0	16	71.1								117.1		10.5		5.0				168.6		117.1
STA. 13+14 TO 138+39	62.0	16	110.2							407.1			15.8		33.04				586.2	48.9	407.1
STA. 138+39 TO 138+29	10.0	16	17.8		61.9								2.0		46.7				89.2	48.6	61.9
RAMP E STA. 02+88 TO 02+98	10.0	16	17.8		24.8								2.0		0.7				35.7	2.7	24.8
STA. 02+98 TO 07+17	419.0	16	744.9							1024.2			109.5		31.3				1474.9	140.8	1024.2
STA. 07+17 TO 07+57	40.0	16	71.1								114.4		10.2		5.0				164.8	15.2	114.4
STA. 07+57 TO 07+62	5.0	16	8.9		17.6							0.6	1.3			3.3			25.3	1.9	17.6
STA. 07+62 TO 22+25	1463.0	16	2600.9			3332.4	975.3					186.6	373.2			975.3			6203.1	559.8	4307.7
STA. 22+25 TO 22+50	25.0	16	44.4	20.2	72.2							3.2	6.4			16.7			104.0	9.6	72.2
RAMP G STA. 138+38 TO 138+48	10.0	16	17.8		55.6								1.8		4.5				80.1	6.2	55.6
STA. 138+48 TO 01+89	250.0	16	444.4							1131.9			49.7		77.1				1629.9	126.8	1131.9
STA. 01+89 TO 02+29	40.0	16	71.1								119.0		10.2		5.0				171.4	15.2	119.0
STA. 02+29 TO 02+34	5.0	16	8.9		14.4							0.6	1.3			3.3			20.8		14.4
STA. 02+34 TO 12+97	1063.0	16	1889.8			2421.3	708.7					135.6	271.2			708.7			4507.1	406.8	3129.9
STA. 12+97 TO 13+22	25.0	16	44.4	20.2	73.5							3.2	6.4			16.7			105.9	9.6	73.5
AIRPORT ROAD INTERCHANGE																					
RAMP A STA. 06+62 TO 06+72	10.0	16	17.8	20.2	28.9								2.6	2.6			6.7		41.6	5.1	28.9
STA. 06+72 TO 18+90	1218.0	16	2165.3					2774.3	812.0				310.7	310.7			812.0		5164.3	621.5	3586.3
STA. 18+90 TO 20+70	180.0	16	320.0					460.0	120.0				51.5	51.5			120.0		835.2		
STA. 20+70 TO 20+75	5.0	16	8.9		19.4								1.3	1.3			3.3		28.0	2.6	19.4
STA. 20+75 TO 20+85	10.0	16	17.8								39.3		2.6		1.2				56.6	3.8	39.3
STA. 20+85 TO 202+89	VAR	VAR	698.1							698.1			39.0		23.1			16.1	1005.3	62.1	698.1
RAMP B STA. 183+55 TO 06+07	VAR	VAR	14369.1							14369.1			152		73.8			14.3	20691.5	240.5	14369.1
STA. 06+07 TO 06+17	10.0	16	17.8								28.9		2.6		1.2				41.6	3.8	28.9
STA. 06+17 TO 06+22	5.0	16	8.9		14.4								1.3	1.3			3.3		20.8	2.6	14.4
STA. 06+22 TO 22+37	1615.0	16	2871.1					3678.6	1076.7				412.0	412.0			1076.7		6847.6	824.0	4755.3
STA. 22+37 TO 22+47	10.0	16	17.8	20.2	28.8								2.6	2.6			6.7		41.5	5.1	28.8
RAMP C STA. 199+96 TO 01+52	VAR	VAR	4735.0		25					4735.0			51		19.9			25.1	6854.4	71.2	4760.0
STA. 01+52 TO 01+62	10.0	16	17.8								37.8		2.6		1.2				54.4	3.8	37.8
STA. 01+62 TO 01+67	5.0	16	8.9		18.9								1.3	1.3			3.3		27.2	2.6	18.9
STA. 01+67 TO 11+72	1005.0	16	1786.7					2289.2	670.0				256.4	256.4			670.0		4261.2	512.8	2959.2
STA. 11+72 TO 11+82	10.0	16	17.8	20.2	28.9								2.6	2.6			6.7		41.6	5.1	28.9
RAMP D STA. 06+75 TO 06+85	10.0	16	17.8	20.2	28.9								2.6	2.6			6.7		41.6	5.1	28.9
STA. 06+85 TO 21+34	1449.0	16	2576.0					3300.5	966.0				369.7	369.7			966.0		6143.8	739.3	4266.5
STA. 21+34 TO 21+39	5.0	16	8.9		14.4								1.3	1.3			3.3		20.8	2.6	14.4
STA. 21+39 TO 21+49	10.0	16	17.8								28.9		2.6		1.2				41.6	3.8	28.9
STA. 21+49 TO 187+46	VAR	VAR	2528.6							2528.6			203		64.7			15.9	3641.1	287.0	2528.6
US 24 INTERCHANGE																					
RAMP A STA. 208+27 TO 01+91	VAR	VAR	772.2		16.7					772.2			75.3		13.1				1136.0	88.4	788.9
STA. 01+91 TO 02+01	10.0	16	17.8								25.6		2.6		1.2				36.8	3.8	25.6
STA. 02+01 TO 02+06	5.0	16	8.9		13.7								1.3	1.3			3.3		19.7	2.6	13.7
STA. 02+06 TO 19+02	1696.0	16	3015.1					3863.1	1130.7				432.7	432.7			1130.7		7191.0	865.3	4993.8
STA. 19+02 TO 19+12	10.0	16	17.8	20.2	28.9								2.6	2.6			6.7		41.6	5.1	28.9
RAMP B STA. 08+61 TO 16+54	793.0	16	1409.8					1806.3	528.7				202.3	202.3			528.7		3362.3	404.6	2334.9
STA. 16+54 TO 16+59	5.0	16	8.9		14.4								1.3	1.3			3.3		20.8	2.6	14.4
STA. 16+59 TO 16+69	10.0	16	17.8								28.9		2.6		1.2				41.6	3.8	28.9
STA. 16+69 TO 20+82	413.0	16	734.2							1009.6			113.1		30.8				1453.8	143.9	1009.6
STA. 20+82 TO 20+92	10.0	16	17.8		22.9								2.7		0.7				33.0	3.5	22.9
RAMP C STA. 03+04 TO 03+14	10.0	16	17.8		29.4								2.6		0.7				42.4	3.3	29.4
STA. 03+14 TO 03+83	69.0	16	122.7							168.7			18.9		5.2				242.9	24.0	168.7
STA. 03+83 TO 03+93	10.0	16	17.8								29		2.7		0.7				41.8	3.5	29.0
STA. 03+93 TO 03+98	5.0	16	8.9		14.4								1.3	1.3			3.3		20.8	2.6	14.4
STA. 03+98 TO 13+44	946.0	16	1681.8					2154.8	630.7				241.3	241.3			630.7		4011.0	482.7	2785.4
STA. 13+44 TO 13+54	10.0	16	17.8	20.2	28.9								2.6	2.6			6.7		41.6	5.1	28.9
RAMP D STA. 10+03 TO 10+13	10.0	16	17.8	20.2	29.0								2.6	2.6			6.7		41.7	5.1	29.0
STA. 10+13 TO 19+57	944.0	16	1678.2					2150.2	629.3				240.8	240.8			629.3		4002.6	481.6	2779.6
STA. 19+57 TO 23+04	347.0	VAR	260.2					260.2	190.2				88.5	88.5			231.3		648.7	177.0	450.5
STA. 23+04 TO 23+09	5.0	16	8.9		19.9								1.3	1.3			3.3		28.6	2.6	19.9
STA. 23+09 TO 23+19	10.0	16	17.8								39.1		2.6		0.7				56.3	3.3	39.1
STA. 23+19 TO 191+65	VAR	VAR	655.4							655.4			58		8.0			7.7	943.8	65.7	655.4
RAMP E STA. 195+58 TO 02+51	VAR	VAR	609.4							609.4			58		12.2				877.6	69.9	609.4
STA. 02+51 TO 02+61	10.0	16	17.8								24.4		2.6		0.7				35.2	3.3	24.4
STA. 02+61 TO 02+66	5.0	16	8.9		12.2								1.3	1.3			3.3		17.6	2.6	12.2
STA. 02+66 TO 14+71	1205.0	16	2142.2					2744.7	803.3				307.4	307.4			803.3		5109.2	614.8	3548.1
STA. 14+71 TO 14+81	10.0	16	17.8	20.2	28.9								2.6	2.6			6.7		41.6	5.1	28.9
RAMP F STA. 06+58 TO 06+68	10.0	16	17.8	20.2	28.9								2.6	2.6			6.7		41.6	5.1	28.9
STA. 06+68 TO 22+00	1532.0	16	2723.6					3489.6	1021.3				390.8	390.8			1021.3		6495.7	781.7	4510.9
STA. 22+00 TO 22+05	5	16	8.9		14.4								1.3	1.3			3.3		20.8	2.6	14.4
STA. 22+05 TO 22+15	10	16	17.8								34.7		2.6		0.7				49.9	3.3	34.7
STA. 22+15 TO 204+44	VAR	VAR	488.4							488.4			42		12.8				703.3	54.7	488.4
TOTAL				262.8	1,033.2	14,751.7		37,550.4		29,527.4	786.7	654.4	5,850.0	3,339.9	528.5	3,420.0	8,713.3	79.0	120,455.1	10,372.7	83,649.3
PROJECT TOTAL				325.0	6,868.4	14,751.7		37,550.4		152,420.0	4,635.6	16,649.2	5,850.0	3,339.9	14,549.3	3,420.0	8,713.3	909.8	814,497	95,922	462,943

MODEL: Default
FILE NAME: pw:\\planroom.dot.illinois.gov:PWEDMS\Documents\IDOT Offices\District 4\Projects\D4 68C45\CADData\DesignSchedules.dgn

USER NAME = jetteam	DESIGNED -	REVISED -
	DRAWN -	REVISED -
PLOT SCALE = 100.0001 ' / in.	CHECKED -	REVISED -
PLOT DATE = 3/19/2021	DATE -	REVISED -

STATE OF ILLINOIS
DEPARTMENT OF TRANSPORTATION

SCHEDULE OF QUANTITIES

SCALE: | SHEET 04 OF 21 SHEETS | STA. TO STA.

F.A.I RTE.	SECTION	COUNTY	TOTAL SHEETS	SHEET NO.
474	72[1RS-3;(2-4)RS-2]	PEORIA	240	21
		CONTRACT NO. 68C45		
		ILLINOIS FED. AID PROJECT		

SHOULDER QUANTITIES - TABLE 1 OF 3

LOCATION	LENGTH	WIDTH		44000157		40603200	40605034	48203100		64200116	40600295	Z0034105	X0328001
				HMA SURF. REMOVAL, 2"		POLY. LEVELING BINDER COURSE (MACHINE METHOD), IL-4.75, N50	POLY. SMA SURFACE COURSE, MIX "E", IL 12.5, N80	HMA SHOULDERS		RUMBLE STRIPS	POLY. BIT. MATERIALS (TACK COAT)	MATERIAL TRANSFER DEVICE	REGENERATIVE AIR SWEEPER
				OUTSIDE SOULDER	INSIDE SHOULDER	INSIDE SHOULDER	INSIDE SHOULDER	BOTTOM LIFT	TOP LIFT		RATES USED FOR CALCS. (LB/SQ FT)		
				9 FT WIDTH	5 FT WIDTH	6 FT WIDTH	6 FT WIDTH	9 FT WIDTH	10 FT WIDTH		0.08		
		RIGHT	LEFT			1"	2"	1"	2"	16"	2 APPL		
NORTHBOUND	FT.	FT	FT	SQ. YD.	SQ. YD.	TON	TON	TON	TON	FT.	LB.	TON	SQ.YD.
I-74 Ramp													
STA. 418+53 TO 419+93	140	10	6	140.4	78.0	5.2	10.5	7.9	17.5	280.9	314.6	41.1	218.4
STA. 419+93 TO 428+28 (BK)	835	10	6	834.6				46.7	103.9	834.6	1,201.9	150.6	834.6
Route 6 Exit													
STA. 157+10 TO 158+11	101	10	6	101.0	56.1	3.8	7.5	5.7	12.6	202.0	226.2	29.5	157.1
STA. 159+10 TO 166+43 (BK)	733	10	6		407.2	27.4	54.7			733.0	586.4	82.1	407.2
I-474 Mainline													
STA. 56+27 (AH) TO 56+55	28	10	6	28.0	15.6	1.0	2.1	1.6	3.5	56.0	62.7	8.2	43.6
STA. 56+55 TO 58+58	203	Bridge Omission- 072-0113											
STA. 58+58 TO 63+51	493	10	6	493.0	273.9	18.4	36.8	27.6	61.4	986.0	1,104.3	144.2	766.9
STA. 63+51 TO 71+40	789	Bridge Omission- 072-0115											
STA. 71+40 TO 114+24	4,284	10	6	4,284.0	2,380.0	159.9	319.9	239.9	533.1	8,568.0	9,596.2	1,252.8	6,664.0
STA. 114+24 TO 115+36	112	Bridge Omission- 072-0117											
STA. 115+36 TO 186+92	7,156	10	6	7,156.0	3,975.6	267.2	534.3	400.7	890.5	14,312.0	16,029.4	2,092.7	11,131.6
STA. 115+46 TO 139+06	2,360	10	6	2,359.9	1,311.1	88.1	176.2	132.2	293.7	4,719.8	5,286.2	690.1	3,670.9
STA. 139+06 TO 186+92 (BK)	4,786	10	6	4,786.1	2,659.0	178.7	357.4	268.0	595.6	9,572.2	10,720.9	1,399.7	7,445.1
STA. 186+91 (AH) TO 198+89	1,198	10	6	1,198.1	665.6	44.7	89.5	67.1	149.1	2,396.2	2,683.8	350.4	1,863.7
STA. 198+89 TO 206+41	752	10	6		417.8	28.1	56.1			752.0	601.6	84.2	417.8
STA. 206+41 TO 222+93	1,652	10	6	1,652.0	917.8	61.7	123.3	92.5	205.6	3,304.0	3,700.5	483.1	2,569.8
STA. 222+93 TO 225+11	218	Bridge Omission- 072-0122											
STA. 225+11 TO 249+00 (BK)	2,389	10	6	2,388.7	1,327.1	89.2	178.4	133.8	297.3	4,777.5	5,350.8	698.6	3,715.8
STA. 248+99 (AH) TO 251+75	276	10	6	276.0	153.4	10.3	20.6	15.5	34.4	552.1	618.3	80.7	429.4
STA. 251+75 TO 253+59	184	Bridge Omission- 072-0125											
STA. 253+59 TO 276+20	2,261	10	6	2,261.0	1,256.1	84.4	168.8	126.6	281.4	4,522.0	5,064.6	661.2	3,517.1
STA. 276+20 TO 289+46	1,326	10	6		736.7	49.5	99.0			1,326.0	1,060.8	148.5	736.7
STA. 289+46 TO 299+45	999	10	6	999.0	555.0	37.3	74.6	55.9	124.3	1,998.0	2,237.8	292.2	1,554.0
STA. 299+45 TO 306+08	663	10	6		368.3	24.8	49.5			663.0	530.4	74.3	368.3
STA. 306+08 TO 348+58	4,250	10	6	4,250.0	2,361.1	158.7	317.3	238.0	528.9	8,500.0	9,520.0	1,242.9	6,611.1
STA. 348+58 TO 360+19	1,161	Bridge Omission- 072-0127											
STA. 360+19 TO 363+15	296	10	6		164.4	11.1	22.1			296.0	236.8	33.2	164.4
STA. 363+15 TO 372+93	978	10	6	978.0	543.3	36.5	73.0	54.8	121.7	1,956.0	2,190.7	286.0	1,521.3
STA. 372+93 TO 377+44	451	10	6		250.6	16.8	33.7			451.0	360.8	50.5	250.6
STA. 377+44 TO 379+57	213	Bridge Omission- 072-0130											
STA. 379+57 TO 384+76	519	10	6	519.0	288.3	19.4	38.8	29.1	64.6	1,038.0	1,162.6	151.8	807.3
STA. 384+76 TO 393+46	870	Bridge Omission- 072-0132											
STA. 393+46 TO 449+28 (BK)	5,582	10	6	5,582.3	3,101.3	208.4	416.8	312.6	694.7	11,164.5	12,504.3	1,632.5	8,683.5
STA. 56+08 (AH) TO 56+23	16	10	6	15.6	8.6	0.6	1.2	0.9	1.9	31.1	34.9	4.6	24.2
STA. 56+23 TO 57+41	118	10	6	117.7	65.4	4.4	8.8	6.6	14.6	235.4	263.7	34.4	183.1
STA. 57+41 TO 59+13	172	10	6	172.0	95.6	6.4	12.8	9.6	21.4	344.0	385.3	50.3	267.6
STA. 59+13 TO 60+47	134	10	6	134.0	74.4	5.0	10.0	7.5	16.7	268.0	300.2	39.2	208.4
STA. 60+47 TO 62+61	214	10	6	214.0	118.9	8.0	16.0	12.0	26.6	428.0	479.4	62.6	332.9
SHOULDER TABLE 1 OF 3 SUB-TOTAL				40,940.5	24,626.0	1,654.9	3,309.7	2,292.7	5,094.8	85,267.3	94,415.8	12,352.1	65,566.5

MODEL: Default
FILE NAME: pw:\\dbanroom.cot.illinois.gov:PWIDOT\Documents\IDOT Offices\District 4\Projects\D4_68C45\CADData\Design\Sheets.dgn

USER NAME = jetteam	DESIGNED -	REVISED -	
	DRAWN -	REVISED -	
PLOT SCALE = 100.0001 ' / in.	CHECKED -	REVISED -	
PLOT DATE = 3/19/2021	DATE -	REVISED -	

STATE OF ILLINOIS
DEPARTMENT OF TRANSPORTATION

SCHEDULE OF QUANTITIES

SCALE: | SHEET 05 OF 21 SHEETS | STA. | TO STA.

F.A.I RTE.	SECTION	COUNTY	TOTAL SHEETS	SHEET NO.
474	72[1RS-3;(2-4)RS-2]	PEORIA	240	22
		CONTRACT NO. 68C45		
		ILLINOIS FED. AID PROJECT		

SHOULDER QUANTITIES -TABLE 2 OF 3

LOCATION						LENGTH	WIDTH		44000157		40603200	40605034	48203100		64200116	40600295	Z0034105	X0328001
									HMA SURF. REMOVAL, 2"		POLY. LEVELING BINDER COURSE (MACHINE METHOD), IL-4.75, N50	POLY. SMA SURFACE COURSE, MIX "E", IL 12.5, N80	HMA SHOULDERS		RUMBLE STRIPS	POLY. BIT. MATERIALS (TACK COAT)	MATERIAL TRANSFER DEVICE	REGENERATIVE AIR SWEEPER
									OUTSIDE SOULDER	INSIDE SHOULDER	INSIDE SHOULDER	INSIDE SHOULDER	BOTTOM LIFT	TOP LIFT		RATES USED FOR CALCS. (LB/SQ FT)		
									9 FT WIDTH	5 FT WIDTH	6 FT WIDTH	6 FT WIDTH	9 FT WIDTH	10 FT WIDTH		0.08		
SOUTHBOUND							RIGHT	LEFT			1"	2"	1"	2"	16"	2 APPL		
I-74 Ramp						FT.	FT	FT	SQ. YD.	SQ. YD.	TON	TON	TON	TON	FT.	LB.	TON	SQ.YD.
STA.	519+33		TO	520+84		151	10	6	151.1	83.9	5.6	11.3	8.5	18.8	302.2	338.4	44.2	235.0
STA.	520+84		TO	528+21	(BK)	737	10	6		409.5	27.5	55.0			737.0	589.6	82.5	409.5
Route 6																		
STA.	80+23		TO	80+63		40	10	6	40.1	22.3	1.5	3.0	2.2	5.0	80.3	89.9	11.7	62.4
STA.	80+63		TO	87+88	(BK)	725	10	6	725.3				40.6	90.3	725.3	1,044.4	130.9	725.3
I-474 Mainline																		
STA.	55+39	(AH)	TO	56+91		152	10	6	152.0	84.4	5.7	11.3	8.5	18.9	304.0	340.5	44.5	236.4
STA.	56+91		TO	58+92		201	Omission- 072-0112											
STA.	58+92		TO	63+89		497	10	6	497.4	276.3	18.6	37.1	27.9	61.9	994.7	1,114.1	145.5	773.7
STA.	63+89		TO	71+16		727	Omission- 072-0114											
STA.	71+16		TO	114+16		4,300	10	6	4,300.0	2,388.9	160.5	321.1	240.8	535.1	8,600.0	9,632.0	1,257.5	6,688.9
STA.	114+16		TO	115+42		126	Omission- 072-0116											
STA.	115+42		TO	183+65		6,823	10	6	6,823.0	3,790.6	254.7	509.5	382.1	849.1	13,646.0	15,283.5	1,995.3	10,613.6
STA.	183+65		TO	186+92	(BK)	327	10	6		181.7	12.2	24.4			327.0	261.6	36.6	181.7
STA.	186+91	(AH)	TO	190+43		352	10	6		195.6	13.1	26.3			352.1	281.7	39.4	195.6
STA.	190+43		TO	213+16		2,273	10	6	2,273.0	1,262.8	84.9	169.7	127.3	282.9	4,546.0	5,091.5	664.7	3,535.8
STA.	213+16		TO	221+61		845	10	6		469.4	31.5	63.1			845.0	676.0	94.6	469.4
STA.	221+61		TO	224+49		288	Omission- 072-0121											
STA.	224+49		TO	249+00	(BK)	2,451	10	6	2,450.7	1,361.5	91.5	183.0	137.2	305.0	4,901.5	5,489.6	716.7	3,812.2
STA.	248+99	(AH)	TO	251+59		260	10	6	260.0	144.5	9.7	19.4	14.6	32.4	520.1	582.5	76.0	404.5
STA.	251+59		TO	253+42		183	Omission - 072-0124											
STA.	253+42		TO	282+89		2,947	10	6	2,947.0	1,637.2	110.0	220.0	165.0	366.7	5,894.0	6,601.3	861.8	4,584.2
STA.	282+89		TO	289+64		675	10	6		375.0	25.2	50.4			675.0	540.0	75.6	375.0
STA.	289+64		TO	301+92		1,228	10	6	1,228.0	682.2	45.8	91.7	68.8	152.8	2,456.0	2,750.7	359.1	1,910.2
STA.	301+92		TO	313+56		1,164	10	6		646.7	43.5	86.9			1,164.0	931.2	130.4	646.7
STA.	313+56		TO	350+30		3,674	10	6	3,674.0	2,041.1	137.2	274.3	205.7	457.2	7,348.0	8,229.8	1,074.4	5,715.1
STA.	350+30		TO	361+19		1,089	Omission- 072-0128											
STA.	361+19		TO	363+08		189	10	6		105.0	7.1	14.1			189.0	151.2	21.2	105.0
STA.	363+08		TO	372+51		943	10	6	943.0	523.9	35.2	70.4	52.8	117.4	1,886.0	2,112.3	275.8	1,466.9
STA.	372+51		TO	377+44		493	10	6		273.9	18.4	36.8			493.0	394.4	55.2	273.9
STA.	377+44		TO	379+57		213	Omission- 072-0129											
STA.	379+57		TO	385+00		543	10	6	543.0	301.7	20.3	40.5	30.4	67.6	1,086.0	1,216.3	158.8	844.7
STA.	385+00		TO	392+63		763	Omission- 072-0131											
STA.	392+63		TO	399+48		685	10	6		380.6	25.6	51.1			685.0	548.0	76.7	380.6
STA.	399+48		TO	449+28	(BK)	4,980	10	6	4,980.3	2,766.8	185.9	371.9	278.9	619.8	9,960.5	11,155.8	1,456.4	7,747.1
STA.	56+08	(AH)	TO	57+10		102	10	6	102.3	56.8	3.8	7.6	5.7	12.7	204.5	229.1	29.9	159.1
STA.	57+10		TO	58+92		182	10	6	182.0	101.1	6.8	13.6	10.2	22.6	364.0	407.7	53.2	283.1
STA.	58+92		TO	60+54		162	10	6	162.0	90.0	6.0	12.1	9.1	20.2	324.0	362.9	47.4	252.0
STA.	60+54		TO	61+83		129	10	6	129.0	71.7	4.8	9.6	7.2	16.1	258.0	289.0	37.7	200.7
STA.	61+83		TO	61+93		10	10	6	10.0	5.6	0.4	0.7	0.6	1.2	20.0	22.4	2.9	15.6
STA.	61+93		TO	62+33		40	10	6	40.0	22.2	1.5	3.0	2.2	5.0	80.0	89.6	11.7	62.2
STA.	62+33		TO	62+71		38	10	6	38.0	21.1	1.4	2.8	2.1	4.7	76.0	85.1	11.1	59.1
STA.	62+71		TO	62+81		10	10	6	9.5	5.3	0.4	0.7	0.5	1.2	19.0	21.3	2.8	14.8
SHOULDER TABLE 2 OF 3 SUB-TOTAL									32,660.7	20,779.2	1,396.4	2,792.7	1,829.0	4,064.4	70,063.2	76,953.4	10,082.5	53,439.8

MODEL: Default
FILE NAME: pw:\\ildmnnoom.cot.illinois.gov:PWIDOT\Documents\IDOT Offices\District 4\Projects\D4_68C45\CADData\Design\Sheets.dgn

USER NAME = jetteam	DESIGNED -	REVISED -	
	DRAWN -	REVISED -	
PLOT SCALE = 100.0001 ' / in.	CHECKED -	REVISED -	
PLOT DATE = 3/19/2021	DATE -	REVISED -	

STATE OF ILLINOIS
DEPARTMENT OF TRANSPORTATION

SCHEDULE OF QUANTITIES

SCALE: | SHEET 06 OF 21 SHEETS | STA. | TO STA.

F.A.I RTE.	SECTION	COUNTY	TOTAL SHEETS	SHEET NO.
474	72[1RS-3;(2-4)RS-2]	PEORIA	240	23
		CONTRACT NO. 68C45		
	ILLINOIS	FED. AID PROJECT		

SHOULDER QUANTITIES - TABLE 3 OF 3

LOCATION					LENGTH	WIDTH RIGHT	WIDTH LEFT	44000157 HMA SURF. REMOVAL, 2" OUTSIDE SOULDER	44000157 HMA SURF. REMOVAL, 2" INSIDE SHOULDER	48203100 POLY. LEVELING BINDER COURSE (MACHINE METHOD), IL-4.75, N50 INSIDE SHOULDER	40605034 POLY. SMA SURFACE COURSE, MIX "E", IL 12.5, N80 INSIDE SHOULDER	48203100 HMA SHOULDERS BOTTOM LIFT	48203100 HMA SHOULDERS TOP LIFT	64200116 RUMBLE STRIPS	40600295 POLY. BIT. MATERIALS (TACK COAT) RATES USED FOR CALCS. (LB/SQ FT)	Z0034105 MATERIAL TRANSFER DEVICE	X0328001 REGENERATIVE AIR SWEEPER
								5 FT WIDTH	5 FT WIDTH	6 FT WIDTH	6 FT WIDTH	5 FT WIDTH	6 FT WIDTH		0.08		
										1"	2"	1"	2"	16"	2 APPL		
Maxwell Interchange					FT.	FT	FT	SQ. YD.	SQ. YD.	TON	TON	TON	TON	FT.	LB.	TON	SQ.YD.
RAMP A	STA.	00+00	TO	02+85	285.0		6.0	158.3				8.9	21.3		228.0	30.1	158.3
	STA.	02+85	TO	06+79	394.0		6.0	218.9				12.3	29.4		315.2	41.7	218.9
	STA.	06+79	TO	06+84	5.0		6.0	2.8				0.2	0.4		4.0	0.5	2.8
RAMP D	STA.	00+73	TO	02+14	141.3		6.0	78.5				4.4	10.5		113.0	14.9	78.5
	STA.	02+14	TO	02+19	5.0		6.0	2.8				0.2	0.4		4.0	0.5	2.8
RAMP E	STA.	22+45	TO	22+50	5.0		6.0	2.8				0.2	0.4		4.0	0.5	2.8
	STA.	22+50	TO	28+71	621.0		6.0	345.0				19.3	46.4		496.8	65.7	345.0
	STA.	28+71	TO	30+21	150.0		6.0	83.3				4.7	11.2		120.0	15.9	83.3
RAMP G	STA.	13+17	TO	13+22	5.0		6.0	2.8				0.2	0.4		4.0	0.5	2.8
	STA.	13+22	TO	14+34	111.8		6.0	62.1				3.5	8.3		89.4	11.8	62.1
AIRPORT ROAD INTERCHANGE																	
RAMP A	STA.	00+00	TO	03+03	303.0		6.0	168.3				9.4	22.6		242.4	32.1	168.3
	STA.	03+03	TO	06+62	359.0		6.0	199.4				11.2	26.8		287.2	38.0	199.4
	STA.	06+62	TO	06+67	5.0		6.0	2.8				0.2	0.4		4.0	0.5	2.8
RAMP B	STA.	22+42	TO	22+47	5.0		6.0	2.8				0.2	0.4		4.0	0.5	2.8
	STA.	22+47	TO	26+82	435.0		6.0	241.7				13.5	32.5		348.0	46.0	241.7
	STA.	26+82	TO	34+08	726.1		6.0	403.4				22.6	54.2		580.9	76.8	403.4
RAMP C	STA.	11+77	TO	11+82	5.0		6.0	2.8				0.2	0.4		4.0	0.5	2.8
	STA.	11+82	TO	17+32	549.9		6.0	305.5				17.1	41.1		439.9	58.2	305.5
	STA.	17+32	TO	24+96	764.1		6.0	424.5				23.8	57.1		611.3	80.8	424.5
RAMP D	STA.	00+00	TO	02+71	271.0		6.0	150.6				8.4	20.2		216.8	28.7	150.6
	STA.	02+71	TO	06+75	404.0		6.0	224.4				12.6	30.2		323.2	42.7	224.4
	STA.	06+75	TO	06+80	5.0		6.0	2.8				0.2	0.4		4.0	0.5	2.8
US 24 INTERCHANGE																	
RAMP A	STA.	19+08	TO	19+13	5.0		6.0	2.8				0.2	0.4		4.0	0.5	2.8
	STA.	19+13	TO	21+29	215.8		6.0	119.9				6.7	16.1		172.6	22.8	119.9
	STA.	21+29	TO	21+39	10.0		6.0	5.6				0.3	0.7		8.0	1.1	5.6
	STA.	21+39	TO	21+79	40.0		6.0	22.2				1.2	3.0		32.0	4.2	22.2
	STA.	21+79	TO	22+13	34.2		6.0	19.0				1.1	2.6		27.4	3.6	19.0
	STA.	22+13	TO	22+27	14.0		6.0	7.8				0.4	1.0		11.2	1.5	7.8
RAMP B	STA.	07+81	TO	07+91	10.0		6.0	5.6				0.3	0.7		8.0	1.1	5.6
	STA.	07+91	TO	08+31	40.0		6.0	22.2				1.2	3.0		32.0	4.2	22.2
	STA.	08+31	TO	08+51	20.0		6.0	11.1				0.6	1.5		16.0	2.1	11.1
	STA.	08+51	TO	08+61	10.0		6.0	5.6				0.3	0.7		8.0	1.1	5.6
RAMP D	STA.	07+00	TO	07+19	18.7		6.0	10.4				0.6	1.4		15.0	2.0	10.4
	STA.	07+19	TO	07+37	18.3		6.0	10.2				0.6	1.4		14.6	1.9	10.2
	STA.	07+37	TO	07+77	40.0		6.0	22.2				1.2	3.0		32.0	4.2	22.2
	STA.	07+77	TO	07+87	10.0		6.0	5.6				0.3	0.7		8.0	1.1	5.6
	STA.	07+87	TO	10+03	216.0		6.0	120.0				6.7	16.1		172.8	22.8	120.0
	STA.	10+03	TO	10+08	5.0		6.0	2.8				0.2	0.4		4.0	0.5	2.8
RAMP E	STA.	14+76	TO	14+81	5.0		6.0	2.8				0.2	0.4		4.0	0.5	2.8
	STA.	14+81	TO	18+60	379.1		6.0	210.6				11.8	28.3		303.3	40.1	210.6
RAMP F	STA.	03+13	TO	06+57	344.0		6.0	191.1				10.7	25.7		275.2	36.4	191.1
	STA.	06+57	TO	06+62	5.0		6.0	2.8				0.2	0.4		4.0	0.5	2.8
SHOULDER TABLE 3 OF 3 SUB-TOTALS								3,886.3	0.0	0.0	0.0	217.6	522.3	0.0	5,596.2	739.9	3,886.3
SHOULDER TABLE 1 OF 3 SUB-TOTAL								40,940.5	24,626.0	1,654.9	3,309.7	2,292.7	5,094.8	85,267.3	94,415.8	12,352.1	65,566.5
SHOULDER TABLE 2 OF 3 SUB-TOTAL								32,660.7	20,779.2	1,396.4	2,792.7	1,829.0	4,064.4	70,063.2	76,953.4	10,082.5	53,439.8
SHOULDER TABLE TOTAL								122,892.6		3,051.2	6,102.5	14,020.9		155,330.5	176,965.3	23,174.5	122,892.6
PROJECT TOTAL								152,420.0		16,649.2	31,494.9	14,549.3		155,330.5	814,497.	95,922.3	462,943.

MODEL: Default
FILE NAME: pw:\\pwinroom.dot.illinois.gov:PWIDOT\Documents\IDOT Offices\District 4\Projects\D4_68C45\CADData\Design\Schedules.dgn

USER NAME = jetteam	DESIGNED -	REVISED -
	DRAWN -	REVISED -
PLOT SCALE = 100.0001 ' / in.	CHECKED -	REVISED -
PLOT DATE = 3/19/2021	DATE -	REVISED -

STATE OF ILLINOIS
DEPARTMENT OF TRANSPORTATION

SCHEDULE OF QUANTITIES

SCALE: | SHEET 07 OF 21 SHEETS | STA. TO STA.

F.A.I RTE.	SECTION	COUNTY	TOTAL SHEETS	SHEET NO.
474	72[1RS-3;(2-4)RS-2]	PEORIA	240	24

CONTRACT NO. 68C45

ILLINOIS | FED. AID PROJECT

AGGREGATE WEDGE SHOULDERS, TYPE B - TABLE 1 OF 3

LOCATION							LENGTH	END AREA	48102100 AGGREGATE WEDGE SHOULDERS, TYPE B
							FT	SQ FT	TON
NORTHBOUND									
I-74 Ramp									
LT	STA.	418+53		TO	426+56		803	0.583	35.6
Route 6 Exit									
RT	STA.	157+10		TO	164+91		781	0.583	34.6
I-474 Mainline									
RT	STA.	62+79		TO	63+42		63	0.583	2.8
RT	STA.	75+20		TO	82+68		748	0.583	33.1
LT/RT	STA.	86+55		TO	108+85		2,230	0.583	197.5
RT	STA.	108+85		TO	109+09		24	0.583	1.1
LT	STA.	119+23		TO	119+34		12	0.583	0.5
LT/RT	STA.	119+34		TO	198+89		7,955	0.583	704.7
RT	STA.	198+89		TO	206+41		752	0.583	33.3
LT/RT	STA.	206+41		TO	219+63		1,322	0.583	117.1
RT	STA.	219+63		TO	219+70		7	0.583	0.3
RT	STA.	229+00		TO	231+08		208	0.583	9.2
LT/RT	STA.	231+08		TO	250+25		1,917	0.583	169.8
RT	STA.	250+25		TO	251+71		146	0.583	6.5
RT	STA.	257+11		TO	264+82		771	0.583	34.1
LT/RT	STA.	264+82		TO	276+20		1,138	0.583	100.8
RT	STA.	276+20		TO	289+47		1,327	0.583	58.8
LT/RT	STA.	289+47		TO	299+45		998	0.583	88.4
RT	STA.	299+45		TO	306+07		662	0.583	29.3
LT/RT	STA.	306+07		TO	332+07		2,600	0.583	230.3
LT	STA.	332+07		TO	332+66		59	0.583	2.6
LT/RT	STA.	332+66		TO	348+24		1,558	0.583	138.0
RT	STA.	348+24		TO	348+90		66	0.583	2.9
LT	STA.	363+15		TO	364+59		144	0.583	6.4
LT/RT	STA.	364+59		TO	372+92		833	0.583	73.8
RT	STA.	372+92		TO	377+44		452	0.583	20.0
RT	STA.	383+41		TO	383+59		18	0.583	0.8
LT/RT	STA.	383+59		TO	384+51		92	0.583	8.1
RT	STA.	384+51		TO	384+80		29	0.583	1.3
LT	STA.	398+36		TO	399+18		82	0.583	3.6
LT/RT	STA.	399+18		TO	445+09		4,591	0.583	406.7
LT	STA.	445+09		TO	445+66		57	0.583	2.5
LT/RT	STA.	445+66		TO	449+28		362	0.583	32.1
LT	STA.	449+28		TO	57+41		133	0.583	5.9
LT/RT	STA.	57+41		TO	59+08		167	0.583	14.8
LT	STA.	59+08		TO	60+17		109	0.583	4.8
LT/RT	STA.	60+17		TO	62+65		248	0.583	22.0
AGGERGATE SHOULDER TABLE 1 OF 3 SUB-TOTAL									2,634.2

AGGREGATE WEDGE SHOULDERS, TYPE B - TABLE 2 OF 3

LOCATION							LENGTH	END AREA	48102100 AGGREGATE WEDGE SHOULDERS, TYPE B
							FT	SQ FT	TON
SOUTHBOUND									
I-74 Ramp									
LT/RT	STA.	519+33		TO	520+84		151	0.583	13.4
LT	STA.	520+84		TO	521+90		106	0.583	4.7
Route 6									
LT/RT	STA.	80+23		TO	80+63		40	0.583	3.6
RT	STA.	80+63		TO	85+43	(BK)	480	0.583	21.3
I-474 Mainline									
LT	STA.	58+81	(AH)	TO	59+69		88	0.583	3.9
LT	STA.	71+23		TO	81+00		977	0.583	43.3
LT/RT	STA.	81+00		TO	110+05		2,905	0.583	257.4
LT	STA.	115+42		TO	117+32		190	0.583	8.4
LT/RT	STA.	117+32		TO	130+40		1,308	0.583	115.9
RT	STA.	130+40		TO	130+96		56	0.583	2.5
LT/RT	STA.	130+96		TO	183+65		5,269	0.583	466.7
LT	STA.	183+65		TO	190+43		678	0.583	30.0
LT/RT	STA.	190+43		TO	213+15		2,272	0.583	201.3
LT	STA.	213+15		TO	226+72		1,357	0.583	60.1
LT/RT	STA.	226+72		TO	244+87		1,815	0.583	160.8
LT	STA.	244+87		TO	247+42		255	0.583	11.3
LT/RT	STA.	253+40		TO	282+88		2,948	0.583	261.1
LT	STA.	282+88		TO	289+64		676	0.583	29.9
LT/RT	STA.	289+64		TO	301+93		1,229	0.583	108.9
LT	STA.	301+93		TO	313+56		1,163	0.583	51.5
LT/RT	STA.	313+56		TO	332+08		1,852	0.583	164.1
RT	STA.	332+08		TO	332+62		54	0.583	2.4
LT/RT	STA.	332+62		TO	345+06		1,244	0.583	110.2
LT	STA.	345+06		TO	346+02		96	0.583	4.3
LT	STA.	360+81		TO	363+03		222	0.583	9.8
LT/RT	STA.	363+03		TO	372+51		948	0.583	84.0
LT	STA.	372+51		TO	372+93		42	0.583	1.9
LT/RT	STA.	379+56		TO	381+21		165	0.583	14.6
LT	STA.	392+82		TO	394+08		126	0.583	5.6
LT/RT	STA.	394+08		TO	445+13		5,105	0.583	452.2
RT	STA.	445+13		TO	445+64		51	0.583	2.3
LT/RT	STA.	445+64		TO	56+08		365	0.583	32.3
RT	STA.	56+08		TO	57+12		104	0.583	4.6
LT/RT	STA.	57+12		TO	58+90		178	0.583	15.8
AGGERGATE SHOULDER TABLE 2 OF 3 SUB-TOTAL									2,759.7

AGGREGATE WEDGE SHOULDERS, TYPE B - TABLE 3 OF 3

LOCATION							LENGTH	END AREA	48102100 AGGREGATE WEDGE SHOULDERS, TYPE B
							FT	SQ FT	TON
RAMPS									
MAXWELL INTERCHANGE									
RAMP A	STA.	06+79		TO	22+03		1,524	0.875	202.5
	STA.	22+03		TO	26+96		493	0.875	32.8
RAMP D	STA.	02+14		TO	13+14		1,100	0.875	146.2
	STA.	13+14		TO	138+29		72	0.875	4.8
RAMP E	STA.	02+88		TO	07+17		429	0.875	28.5
	STA.	07+17		TO	22+50		1,533	0.875	203.7
RAMP G	STA.	138+38		TO	01+89		260	0.875	17.3
	STA.	01+89		TO	13+22		1,133	0.875	150.5
AIRPORT INTERCHANGE									
RAMP A	STA.	06+62		TO	20+84		1,422	0.292	63.0
	STA.	20+84		TO	202+82		156	0.292	3.5
RAMP B	STA.	01+09		TO	07+16		607	0.292	13.4
	STA.	07+16		TO	22+47		1,531	0.292	67.8
RAMP C	STA.	199+98		TO	01+42		140	0.292	3.1
	STA.	01+42		TO	11+82		1,040	0.292	46.1
RAMP D	STA.	06+75		TO	20+49		1,374	0.292	60.9
	STA.	20+49		TO	187+45		732	0.292	16.2
US 24 INTERCHANGE									
RAMP A	STA.	02+22		TO	19+12		1,690	0.292	74.9
RAMP B	STA.	07+80		TO	16+69		889	0.292	39.4
	STA.	16+69		TO	20+92		423	0.292	9.4
RAMP C	STA.	03+04		TO	03+83		79	0.292	1.7
	STA.	03+83		TO	13+54		971	0.292	43.0
RAMP D	STA.	10+03		TO	23+05		1,302	0.292	57.7
RAMP E	STA.	02+65		TO	14+81		1,216	0.292	53.9
RAMP F	STA.	06+58		TO	22+14		1,556	0.292	68.9
AGGERGATE SHOULDER TABLE 3 OF 3 SUB-TOTAL									1,408.9
AGGERGATE SHOULDER TABLE 1 OF 3 SUB-TOTAL									2,634.2
AGGERGATE SHOULDER TABLE 2 OF 3 SUB-TOTAL									2,759.7
AGGERGATE SHOULDER TOTAL									6,802.8

PATCHING

Location	44200529 Class A Type II Patch 8"	44200533 Class A Type III Patch 8"	44200535 Class A Type IV Patch 8"	44200583 Class A Type IV Patch 12"	44213000 Patching Reinforcement	Class B Type II Patch 9"	Class B Type III Patch 9"	Dowel Bars	Saw Cuts
	Sq Yd	Sq Yd	Sq Yd	Sq Yd	Sq Yd			Each	Foot
Illinois River to US 24									
EASTBOUND		16			16				72
WESTBOUND	109				109				788
US 24 to Airport Rd.									
EASTBOUND	113	16	53	202	384				976
WESTBOUND	109	60	27	205	401				1116
Airport Rd. to Maxwell Rd.									
EASTBOUND	123	20			143				988
WESTBOUND	16				16				120
Maxwell Rd. to N. of IL 8									
EASTBOUND	187	36	27		250				1574
WESTBOUND	85		120		205				932
EB - Maxwell Rd. Ramps						57	21	240	472
EB - Airport Rd. Ramps							21	30	72
WB - US 24 Ramps						36		150	280
SUBTOTAL	742	148	227		1524.4	93	42	420	7390
10% FOR WINTER BREAKUP	74	15	23		152	9	4	42	739
10% FOR CONCRETE CONDITION	74	15	23		152	9	4	42	739
TOTAL	890	178	272	407	1829	112	50	504	8868

EXPANSION PATCH QUANTITIES

	50300225	50800205	44201296	44213204	44213200	44201007	Z0021400	31100300	60108100	60100360	44004250	48203100
	Concrete Structures	Reinforcement Bars (Epoxy Coated)	Deformed Bars, Expansion Joint, 3/4"	Tie Bars, 3/4"	Saw Cuts	Class B Patches, Type II, 13"	Expansion Joint Special	Sub-Base Gran, Material, Type A, 4"	Pipe Underdrain, 4" Spl.	Concrete Headwalls for Pipe Drains	Paved Shoulder Removal	HMA Shoulders
Location	CU YD	LB	EA			SQ YD	FT	SQ YD	FT	EA	SQ YD	TON
Shade Lohmann bridge												
North side of structure												
SB I-474 (Outside Shoulder)							10		25	1		17
SB I-474 (Inside Shoulder)							6		19	1		7
SB I-474 (Mainline)	2.93	1284	44	14	136	44	24	27			3	
NB I-474 (Outside Shoulder)							10		25	1		17
NB I-474 (Inside Shoulder)							6		19	1		7
NB I-474 (Mainline)	2.93	1284	44	14	136	44	24	27			3	
SN 072-0131 & 0132												
South side of structure												
SB I-474 (Outside Shoulder)							10		25	1		17
SB I-474 (Inside Shoulder)							6		19	1		7
SB I-474 (Mainline)	2.93	1284	44	14	136	44	24	27			3	
NB I-474 (Outside Shoulder)							10		25	1		17
NB I-474 (Inside Shoulder)							6		19	1		7
NB I-474 (Mainline)	2.93	1284	44	14	136	44	24	27			3	
North side of structure												
SB I-474 (Outside Shoulder)							10		25	1		17
SB I-474 (Inside Shoulder)							6		19	1		7
SB I-474 (Mainline)	2.93	1284	44	14	136	44	24	27			3	
NB I-474 (Outside Shoulder)							10		25	1		17
NB I-474 (Inside Shoulder)							6		19	1		7
NB I-474 (Mainline)	2.93	1284	44	14	136	44	24	27			3	
SN 072-0129 & 0130 (US24)												
South side of structure												
SB I-474 (Outside Shoulder)							10		25	1		17
SB I-474 (Inside Shoulder)							6		19	1		7
SB I-474 (Mainline)	4.4	1926	66	21	204	66	35	41			5	
NB I-474 (Outside Shoulder)							10		25	1		17
NB I-474 (Inside Shoulder)							6		19	1		7
NB I-474 (Mainline)	2.93	1284	44	14	136	44	24	27			3	
North side of structure												
SB I-474 (Outside Shoulder)							10		25	1		17
SB I-474 (Inside Shoulder)							6		19	1		7
SB I-474 (Mainline)	2.93	1284	44	14	136	44	24	27			3	
NB I-474 (Outside Shoulder)							10		25	1		17
NB I-474 (Inside Shoulder)							6		19	1		7
NB I-474 (Mainline)	2.93	1284	44	14	136	44	24	27			3	
SN 072-0127 & 0128 (Kickapoo Cr. Rd.)												
South side of structure												
SB I-474 (Outside Shoulder)							10		25	1		17
SB I-474 (Inside Shoulder)							6		19	1		7
SB I-474 (Mainline)	2.93	1284	44	14	136	44	24	27			3	
NB I-474 (Outside Shoulder)							10		25	1		17
NB I-474 (Inside Shoulder)							6		19	1		7
NB I-474 (Mainline)	2.93	1284	44	14	136	44	24	27			3	
North side of structure												
SB I-474 (Outside Shoulder)							10		25	1		17
SB I-474 (Inside Shoulder)							6		19	1		7
SB I-474 (Mainline)	2.93	1284	44	14	136	44	24	27			3	
NB I-474 (Outside Shoulder)							10		25	1		17
NB I-474 (Inside Shoulder)							6		19	1		7
NB I-474 (Mainline)	2.93	1284	44	14	136	44	24	27			3	
SUB-TOTAL	42.5	18618	638	203	1972	638	571	392	616	28	44	336

MODEL: $MODELNAME$
FILE NAME: $FILE$

USER NAME = $USER$	DESIGNED -	REVISED -
	DRAWN -	REVISED -
PLOT SCALE = $SCALE$	CHECKED -	REVISED -
PLOT DATE = $DATE$	DATE -	REVISED -

STATE OF ILLINOIS
DEPARTMENT OF TRANSPORTATION

SCHEDULE OF QUANTITIES

SCALE: SHEET 12 OF 21 SHEETS STA. TO STA.

F.A.I RTE.	SECTION	COUNTY	TOTAL SHEETS	SHEET NO.
474	72(1RS-3:(2-4)RS-2)	PEORIA	240	29
		CONTRACT NO. 68C45		
	ILLINOIS FED. AID PROJECT			

EXPANSION PATCH QUANTITIES - CONTINUED

	50300225	50800205	44201296	44213204	44213200	44201007	Z0021400	31100300	60108100	60100060	44004250	48203100
	Concrete Structures	Reinforcement Bars (Epoxy Coated)	Deformed Bars, Expansion Joint, 3/4"	Tie Bars, 3/4"	Saw Cuts	Class B Patches, Type II, 13"	Expansion Joint Special	Sub-Base Gran, Material, Type A, 4"	Pipe Underdrain, 4" Spl.	Concrete Headwalls for Pipe Drains	Paved Shoulder Removal	HMA Shoulders
Location	CU YD	LB	EA			SQ YD	FT	SQ YD	FT	EA	SQ YD	TON
SN 072-0124 & 0125 (Abandoned RR)												
South side of structure												
SB I-474 (Outside Shoulder)							10		25	1		17
SB I-474 (Inside Shoulder)							6		19	1		7
SB I-474 (Mainline)	2.93	1284	44	14	136	44	24	27			3	
NB I-474 (Outside Shoulder)							10		25	1		17
NB I-474 (Inside Shoulder)							6		19	1		7
NB I-474 (Mainline)	2.93	1284	44	14	136	44	24	27			3	
North side of structure												
SB I-474 (Outside Shoulder)							10		25	1		17
SB I-474 (Inside Shoulder)							6		19	1		7
SB I-474 (Mainline)	2.93	1284	44	14	136	44	24	27			3	
NB I-474 (Outside Shoulder)							10		25	1		17
NB I-474 (Inside Shoulder)							6		19	1		7
NB I-474 (Mainline)	2.93	1284	44	14	136	44	24	27			3	
SN 072-0116 & 0117 (Pottstown Rd)												
South side of structure												
SB I-474 (Outside Shoulder)							10		25	1		17
SB I-474 (Inside Shoulder)							6		19	1		7
SB I-474 (Mainline)	2.93	1284	44	14	136	44	24	27			3	
NB I-474 (Outside Shoulder)							10		25	1		17
NB I-474 (Inside Shoulder)							6		19	1		7
NB I-474 (Mainline)	2.93	1284	44	14	136	44	24	27			3	
North side of structure												
SB I-474 (Outside Shoulder)							10		25	1		17
SB I-474 (Inside Shoulder)							6		19	1		7
SB I-474 (Mainline)	2.93	1284	44	14	136	44	24	27			3	
NB I-474 (Outside Shoulder)							10		25	1		17
NB I-474 (Inside Shoulder)							6		19	1		7
NB I-474 (Mainline)	2.93	1284	44	14	136	44	24	27			3	
SN 072-0112 & 0113 (IL Rte 8)												
South side of structure												
SB I-474 (Outside Shoulder)							10		25	1		17
SB I-474 (Inside Shoulder)							6		19	1		7
SB I-474 (Mainline)	5.86	2568	88	28	275	88	46	54			6	
NB I-474 (Outside Shoulder)							10		25	1		17
NB I-474 (Inside Shoulder)							6		19	1		7
NB I-474 (Mainline)	5.86	2568	88	28	272	88	36	54			6	
North side of structure												
SB I-474 (Outside Shoulder)							10		50	2		34
SB I-474 (Inside Shoulder)							6		19	1		7
SB I-474 (Mainline)	5.86	2568	88	28	272	88	55	54			6	
NB I-474 (Outside Shoulder)							10		50	2		34
NB I-474 (Inside Shoulder)							6		19	1		7
NB I-474 (Mainline)	5.86	2568	88	28	272	88	50	54			6	
US 24 INTERCHANGE RAMPS												
Ramp A	1.96	1180	30		136	29	16	18	25	1	3	10
Ramp B	1.96	1180	30		136	29	16	18	25	1	3	10
Ramp C - Included in Mainline												
Ramp D	1.96	1180	30		136	29	16	18	25	1	3	10
Ramp E	1.96	1180	30		136	29	16	18	25	1	3	10
Ramp F	1.96	1180	30		136	29	16	18	25	1	3	10
Maxwell Interchange												
Ramp A	1.96	1180	30		136	29	16	18	25	1	3	10
Ramp D	1.96	1180	30		136	29	16	18	25	1	3	10
Ramp E	1.96	1180	30		136	29	16	18	25	1	3	10
Ramp G	1.96	1180	30		136	29	16	18	25	1	3	10
SUB-TOTAL PAGE 2	64.5	31164.0	974.0	224.0	3403.0	965.0	715.0	594.0	803.0	35.0	75.0	412.0
SUB-TOTAL PAGE 1	42.5	18618.0	638.0	203.0	1972.0	638.0	571.0	392.0	616.0	28.0	44.0	336.0
Total	**107.0**	**49782.0**	**1612.0**	**427.0**	**5375.0**	**1603.0**	**1286.0**	**986.0**	**1419.0**	**63.0**	**119.0**	**748.0**

DRAINAGE QUANTITIES - SHEET 1 OF 2

LOCATION	20100110 TREE REMOVAL (6- 15 UNITS DIAMETER)	20100210 TREE REMOVAL (OVER 15 UNITS DIAMETER)	20100500 TREE REMOVAL, ACRES	20201200 REMOVAL AND DISPOSAL OF UNSUITABLE MATERIAL	20300100 CHANNEL EXCAVATION	20400800 FURNISHED EXCAVATION	21400100 GRADING AND SHAPING DITCHES	28200200 FILTER FABRIC	44000400 PAVED DITCH REMOVAL	50104400 CONCRETE HEADWALL REMOVAL	50105220 PIPE CULVERT REMOVAL	542101B9 PIPE ELBOW, 24"	542101B0 PIPE ELBOW, 30"	542134S9 END SECTIONS 24"	542134S0 END SECTIONS 30"	542134S7 END SECTIONS 42"	542136B9 PRECAST REINFORCED CONRETE FLARED END SECTIONS 24"	542136F5 PRECAST REINFORCED CONRETE FLARED END SECTIONS 30"	542A10B9 PIPE CULVERTS, CLASS A, TYPE 2, 24"	542C10F5 PIPE CULVERTS, CLASS C, TY 2, 30"	542D10F7 PIPE CULVERTS, CLASS D, TY 2, 12"	542D10B9 PIPE CULVERTS, CLASS D, TY 2, 24"	542444D5 FLUSH INLET BOX FOR MEDIAN, STANDARD 542546	54246405 INLET BOX, STANDARD 542531	54247130 GRATING FOR CONCRETE FLARED END SECTION, 24"	54247150 GRATING FOR CONCRETE FLARED END SECTION, 30"	54248510 CONCRETE COLLAR	60246605 MEDIAN INLET (604101)	60260100 INLETS TO BE ADJUSTED
STATION	UNIT	UNIT	ACRE	CU YD	CU YD	CU YD	FOOT	SQ YD	FOOT	EACH	FOOT	EACH	EACH	EACH	EACH	EACH	EACH	EACH	FOOT	FOOT	FOOT	FOOT	EACH	EACH	EACH	EACH	CU YD	EACH	EACH
ROADWAY A																													
161+17																											0.4		1.0
ROADWAY B																													
80+86																													1.0
83+23																													1.0
SB I-474																													
526+54																													1.0
528+03.5																													1.0
NORTHBOUND																													
STA 54+36 LT																1.0													
STA 63+00 LT										1.0	76.0			1.0								12.0							
STA 71+75 TO 72+00 LT	24.0									1.0	90.0											12.0							
STA 80+44 LT			0.14								168.0		1.0		1.0					75.0									
STA 90+10 LT	8.0							44.4																					
STA 116+11 LT			0.10																										
STA 131+87 LT							20.0				16.0																		
STA 201+00 LT					5.9		126.0																				0.9		
STA 204+50 TO 205+80 LT								123.3																					
STA 205+37 LT								26.7																					
STA 209+33 TO 212+81			0.93																										
STA 211+00 LT							170.0																						
STA 226+00 LT								38.7			54.0										12.0								1.0
STA 225+41 TO 226+61 LT			0.16								140.0	1.0		1.0								40.0	1.0						
STA 233+25 LT								10.3																					
STA 245+00 LT / RT							170.0																						
STA 246+80 TO 249+85 LT			0.07																										
STA 249+85 TO 252+15 LT			0.25					309.3		1.0	232.0																		
STA 253+81 LT								6.7			25.0										15.0								1.0
STA 259+10 LT											34.0											34.0							
STA 259+55 TO 261+05 LT			0.10		88.9			240.2	24.0	1.0	104.0																		
STA 283+50 LT							50.0																						
STA 312+00 TO 314+36 LT			0.29					22.2			278.0	1.0										68.0							
STA 335+07 TO 341+19 LT			0.41		54.0			867.4		1.0	218.0																		
SOUTHBOUND																													
STA 63+73 RT											100.0																		
STA 71+80 RT											46.0																		
STA 86+40 RT			0.09		55.6			131.4																					
STA 89+20 RT	36.0							216.1			16.0						1.0		16.0										
STA 98+20 RT								51.7																					
STA 141+00 RT								11.1																					
STA 150+00 LT / RT							150.0	6.0																					
STA 201+00 RT	73.0	176.0					210.0																						
STA 207+20 TO 210+34			1.1																										
STA 226+60 RT			0.2				100.0																						
STA 233+25 LT/RT							130.0																						
STA 249+91 TO 251+21 RT			0.09		69.0																								
STA 255+91 TO 257+48 RT			0.22																										
STA 261+94 TO 262+90 RT			0.09																										
STA 279+00 RT	102.0	154.0																											
STA 294+67 TO 295+57 RT							50.0																						
STA 313+48 TO 314+30 RT			0.09		22.2																								
STA 337+72 TO 339+02			0.24					116.4																					
STA 342+04 TO 342+80 RT	55.0				50.0			20.0			70.0											70.0	1.0						
STA 381+50 LT / RT							150.0				12.0						1.0												
STA 406+00 RT							50.0																						
STA 416+60 RT							30.0																						
STA 422+00 RT							15.0																						
STA 431+00 RT							30.0																						
STA 436+00 RT							50.0																						
MEDIAN																													
STA 131+00						49.4																22.0	1.0						
STA 201+00								24.0																					
STA 283+50								9.3																					
STA 313+57								9.3																					
STA 332+00						47.3													12.0					1.0					
STA 349+10								7.1																					
MAXWELL INTERCHANGE																													
RAMP D																													
STA 3+47 RT								11.1																					
RAMP E																													
STA 20+70 LT							50.0											1.0							1.0				
STA 20+70 RT																		1.0							1.0				
STA 22+50 LT/RT							440.0										1.0							1.0					1.0
STA 31+64 RT																													3.0
AIRPORT ROAD INTERCHANGE																													
RAMP A																													
STA 8+20 TO 13+38 RT			0.65	59.3				53.9	207.0	1.0	146.0																		
STA 23+15 TO 24+20 RT			0.05	17.8																									
STA 27+08 TO 27+90 RT			0.05					13.3																					
US 24 INTERCHANGE																													
RAMP A																													
STA 7+67 RT								11.1																					
RAMP C																													
STA 9+00 RT																													1.0
RAMP D																													
STA 13+66 RT																													1.0
RAMP E																													
STA 3+74 LT/ RT							385.0																					1.0	
STA 11+00 LT/ RT							170.0																						
RAMP F																													
STA 4+50 RT							50.0	17.8																					
STA 11+20 LT/ RT							110.0																						
TOTALS	298.0	330.0	5.2	77.0	345.6	96.6	2706.0	2399.1	231.0	6.0	1825.0	2.0	1.0	2.0	1.0	1.0	3.0	2.0	28.0	75.0	27.0	258.0	3.0	1.0	1.0	2.0	1.3	1.0	13.0

MODEL: Default
FILE NAME: pw:\\gisnroom.dot.illinois.gov:PWIDOT\Documents\IDOT Offices\District 4\Projects\2- 68C45\CADData\Design\Schedules.dgn

USER NAME = $USER$	DESIGNED -	REVISED -	
	DRAWN -	REVISED -	
PLOT SCALE = 1:100	CHECKED -	REVISED -	
PLOT DATE = 3/22/2021	DATE -	REVISED -	

STATE OF ILLINOIS
DEPARTMENT OF TRANSPORTATION

SCHEDULE OF QUANTITIES

SCALE: | SHEET 13 OF 21 SHEETS | STA. TO STA.

F.A.I RTE.	SECTION	COUNTY	TOTAL SHEETS	SHEET NO.
474	72[1RS-3;(2-4)RS-2]	PEORIA	240	30

CONTRACT NO. 68C45

ILLINOIS | FED. AID PROJECT

DRAINAGE QUANTITIES - SHEET 2 OF 2

LOCATION	60402210	66500105	X0301735	X0301993	X0322584	X0325893	X0326662	X0326665	X0326763	X0327770	X0426200	X1200073	X1200207	X2200020	X2810210	X2810226	X2810228	X2810812	X2810814	X5010523	X5015225	X5030225	X5420624	X5420636	X6050700	Z0013300	Z0018500	Z0022800	Z0041500
	GRATES, TYPE 8	WOVEN WIRE FENCE, 4'	CONCRETE HEADWALL REPAIR	REMOVE AND REINSTALL CONCRETE HEADWALL	REVETMENT MAT REMOVAL	CLEAN EXISTING END SECTION	CURED-IN-PLACE PIPE LINER, 24"	CURED-IN-PLACE PIPE LINER, 42"	REMOVE GRATING	REPLACE MEDIAN GRATE	DEWATERING	MANHOLE REMOVAL	REMOVE AND RELAY PIPE CULVERTS (SPECIAL)	FENCE REMOVAL AND REINSTALLATION	STONE RIPRAP, CLASS A5 (SPECIAL)	STONE RIPRAP, CLASS B3 (SPECIAL)	STONE RIPRAP, CLASS B4 (SPECIAL)	STONE DUMPED RIPRAP, CLASS B4 (SPECIAL)	STONE DUMPED RIPRAP, CLASS B5 (SPECIAL)	REMOVE CONCRETE END SECTION	PIPE CULVERT REMOVAL (SPECIAL)	CONCRETE STRUCTURES (SPECIAL)	PIPE CULVERTS TO BE CLEANED, 24"	PIPE CULVERTS TO BE CLEANED, 36"	REMOVE INLET BOX	CONCRETE REMOVAL (SPECIAL)	DRAINAGE STRUCTURE TO BE CLEANED	FENCE REMOVAL	PLUG EXISTING CULVERTS
STATION	EACH	FOOT	EACH	EACH	SQ YD	EACH	FOOT	FOOT	EACH	EACH	L SUM	EACH	FOOT	FOOT	TON	TON	TON	TON	TON	EACH	FOOT	CU YD	FOOT	FOOT	EACH	SQ YD	EACH	FOOT	EACH
NORTHBOUND																													
STA 54+36 LT								162.0																					
STA 63+00 LT														36.0				24.38							1.0				1.0
STA 71+75 TO 72+00 LT												1.0		36.0				31.6							1.0				1.0
STA 80+44 LT		170.0																86.9										170.0	
STA 90+10 LT															40.7												1.0		
STA 131+61 LT																											1.0		
STA 204+50 TO 205+80 LT																	82.0												
STA 205+37 LT																	17.7												
STA 211+00 LT						1.0																	92.0						
STA 226+00 LT																13.0													
STA 225+41 TO 226+61 LT																		82.5							1.0				
STA 233+25 LT																	6.9										1.0		
STA 245+00 LT / RT																							74.0						
STA 246+80 TO 249+85 LT					406.7													270.4											
STA 249+85 TO 252+15 LT																	205.7												
STA 253+81 LT																2.2											1.0		
STA 259+55 TO 261+05 LT																	159.7												
STA 269+00 LT																											1.0		
STA 283+50 LT																							50.0						
STA 292+33 TO 295+91 LT																		269.0											
STA 312+00 TO 314+36 LT									1.0	1.0							14.8	152.2										48.0	
STA 323+00 LT																							50.0				1.0		
STA 335+07 TO 341+19 LT					533.3										59.3		533.8												
SOUTHBOUND																													
STA 63+73 RT																									1.0				
STA 71+80 RT																					46.0				1.0				
STA 86+40 RT														106.0	120.3														
STA 89+20 RT																72.4				1.0									
STA 98+20 RT																17.3													
STA 141+00 RT																3.7													
STA 150+00 LT / RT																2.0							110.0						
STA 159+00 LT / RT																							143.0				1.0		
STA 226+60 RT					133.3													59.1	254.6				84.0						
STA 233+25 LT/RT																								176.0					
STA 240+01 TO 261+21 RT														50.0				119.7											
STA 251+31 RT																		59.1											
STA 251+85 LT/ RT											1.0											62.0							
STA 279+00 RT																		36.0										36.0	
STA 294+67 TO 295+57 RT			1.0																										
STA 313+48 TO 314+30 RT																	33.3										1.0		
STA 337+72 TO 339+02																	77.4												
STA 342+04 TO 342+80 RT																	13.3								1.0				
STA 381+50 LT / RT													8.0					50.2											
STA 406+00 RT																							30.0						
STA 422+00 RT																							20.0						
STA 431+00 RT																							20.0						
MEDIAN																													
STA 131+00							38.0																		1.0				
STA 159+20																							17.0				1.0		
STA 201+00				1.0												8.0													
STA 251+30							45.0																						
STA 283+50																3.1													
STA 295+75							32.0																						
STA 313+57							40.0									3.1													
STA 332+00																									1.0				
STA 341+82							58.0																						
STA 349+10																2.4													
MAXWELL INTERCHANGE																													
RAMP D																													
STA 3+47 RT																	7.4												
RAMP E																													
STA 20+70 LT					16.0				1.0											1.0									
STA 20+70 RT					16.0				1.0											1.0									
STA 22+50 LT/RT					16.0				1.0											1.0									
AIRPORT ROAD INTERCHANGE																													
RAMP A																													
STA 8+20 TO 13+38 RT															49.3			532.4											
STA 19+00 RT																		40.0											
STA 20+78 RT																		60.0											
STA 20+92 RT																		60.0											
STA 21+22 RT																		60.0											
RAMP B																													
STA 23+15 TO 24+20 RT																	26.7										1.0		
STA 27+08 TO 27+90 RT	1.0								1.0							20.0													
US 24 INTERCHANGE																													
RAMP A																													
STA 2+67 RT																	7.4										1.0		
RAMP E																													
STA 3+74 LT/ RT																										5.0	1.0		
RAMP F																													
STA 4+50 RT																	11.8												
TOTALS	1.0	170.0	1.0	1.0	1121.3	1.0	213.0	162.0	5.0	1.0	1.0	1.0	8.0	228.0	269.5	147.3	1198.0	1996.3	254.6	4.0	46.0	62.0	690.0	176.0	8.0	5.0	12.0	254.0	2.0

MODEL: Default
FILE NAME: pw:\\plannroom.dot.illinois.gov:PWIDOT\Documents\IDOT Offices\District 4\Projects\D- 68C45\CADData\Design\Schedules.dgn

USER NAME = $USER$	DESIGNED -	REVISED -	
	DRAWN -	REVISED -	
PLOT SCALE = 1:100	CHECKED -	REVISED -	
PLOT DATE = 3/22/2021	DATE -	REVISED -	

STATE OF ILLINOIS
DEPARTMENT OF TRANSPORTATION

SCHEDULE OF QUANTITIES

SCALE: | SHEET 13 OF 21 SHEETS | STA. TO STA.

F.A.I RTE.	SECTION	COUNTY	TOTAL SHEETS	SHEET NO.
474	72(1RS-3;(2-4)RS-2)	PEORIA	240	31
		CONTRACT NO. 68C45		
		ILLINOIS FED. AID PROJECT		

GUARDRAIL REMOVAL - 63200310

NORTHBOUND						LENGTH FT	
STA	415+84.33	TO	STA	417+47.42	RT	163.5	74/474 ROADWAY A
STA	426+76.18	TO	STA	56+45.19	RT	169.1	
STA	165+00.47	TO	STA	56+54.50	LT	169.7	
STA	58+54.21	TO	STA	63+25.51	RT	471.3	
STA	58+76.30	TO	STA	61+75.37	LT	299.1	
STA	71+50.55	TO	STA	74+43.20	LT	292.6	
STA	71+59.62	TO	STA	86+13.80	RT	1455.2	
STA	82+71.15	TO	STA	86+12.81	LT	341.6	
STA	108+84.20	TO	STA	114+19.13	RT	534.9	
STA	109+08.19	TO	STA	114+11.13	LT	502.9	
STA	115+48.34	TO	STA	118+91.33	RT	343.0	
STA	115+48.83	TO	STA	118+39.37	LT	290.5	
STA	10+65.69	TO	STA	13+54.29	LT	283.7	MAXWELL RAMP D
STA	0+00.00	TO	STA	0+94.02	RT	94.0	MAXWELL RAMP G
STA	219+64.33	TO	STA	222+91.56	RT	327.2	
STA	219+83.77	TO	STA	222+78.13	LT	294.4	
STA	225+08.93	TO	STA	228+04.16	LT	295.2	
STA	225+27.62	TO	STA	230+43.73	RT	516.1	
STA	250+23.27	TO	STA	251+76.25	RT	153.0	
STA	253+84.65	TO	STA	256+68.44	LT	282.1	
STA	254+02.31	TO	STA	257+31.03	RT	322.8	
STA	284+43.68	TO	STA	288+65.90	RT	422.2	
STA	18+81.63	TO	STA	22+25.33	RT	343.7	US24 RAMP A
STA	360+60.31	TO	STA	363+57.33	LT	297.0	
STA	2+13.22	TO	STA	3+17.23	RT	104.0	US24 RAMP F
STA	379+67.13	TO	STA	382+65.34	LT	298.2	
STA	379+70.14	TO	STA	383+17.31	RT	347.2	
STA	17+39.76	TO	STA	20+93.18	RT	353.4	US24 RAMP B
STA	393+40.18	TO	STA	398+84.22	LT	544.2	
STA	393+73.60	TO	STA	398+06.30	RT	432.7	
STA	60+80.71	TO	STA	62+60.97	LT	180.9	
SOUTHBOUND							
STA	522+82.30	TO	STA	528+21.02	LT	538.7	74/47 SOUTHBOUND
STA	55+37.50	TO	STA	56+65.84	LT	128.3	
STA	85+95.75	TO	STA	87+88.26	RT	192.5	74/474 ROADWAY B
STA	55+37.50	TO	STA	56+87.02	RT	149.5	
STA	59+10.53	TO	STA	63+91.20	RT	480.7	
STA	60+70.24	TO	STA	63+64.34	LT	294.1	
STA	71+21.99	TO	STA	81+02.48	RT	980.5	
STA	110+58.39	TO	STA	113+96.51	RT	338.1	
STA	111+05.71	TO	STA	114+03.72	LT	298.0	
STA	115+52.93	TO	STA	116+81.04	LT	128.1	
STA	26+05.94	TO	STA	31+72.61	RT	566.7	MAXWELL RAMP E
STA	219+72.65	TO	STA	222+63.15	LT	290.5	
STA	245+37.99	TO	STA	251+48.62	RT	613.8	
STA	248+60.17	TO	STA	251+52.80	LT	295.0	
STA	345+49.67	TO	STA	350+64.64	RT	515.8	
STA	347+01.92	TO	STA	349+93.09	LT	291.2	
STA	7+11.92	TO	STA	23+30.32	RT	1618.4	US24 RAMP D
STA	3+13.69	TO	STA	13+53.06	RT	1039.4	US24 RAMP C
STA	11+54.46	TO	STA	13+52.85	LT	203.9	US24 RAMP C
STA	23+73.90	TO	STA	26+67.48	RT	293.6	US24 RAMP E
STA	26+67.48	TO	STA	384+93.97	RT	50.5	
STA	373+35.74	TO	STA	377+31.71	LT	396.0	
STA	381+91.43	TO	STA	384+84.25	LT	292.8	
STA	20+63.65	TO	STA	22+07.83	RT	144.2	US24 RAMP C
STA	59+53.41	TO	STA	62+80.51	RT	327.1	
STA	61+22.42	TO	STA	62+80.51	LT	162.5	
TOTAL						21,555	

GUARDRAIL REMOVAL SPECIAL- X6320100

NORTHBOUND						LENGTH FT	
STA	426+76.18	TO	STA	56+45.19	RT	169	
STA	58+54.21	TO	STA	63+25.51	RT	471	
STA	71+59.62	TO	STA	86+13.80	RT	1,455	
STA	220+50.00	TO	STA	222+91.56	RT	327	
STA	250+23.27	TO	STA	251+76.25	RT	153	
STA	254+02.31	TO	STA	257+31.03	RT	323	
STA	18+81.63	TO	STA	22+25.33	RT	344	US24 RAMP A
SOUTHBOUND							
STA	85+95.75	TO	STA	87+88.26	RT	193	
STA	59+10.53	TO	STA	63+91.20	RT	481	
STA	71+21.99	TO	STA	81+02.48	RT	981	
STA	26+05.94	TO	STA	31+72.61	RT	567	MAXWELL RAMP E
STA	245+37.99	TO	STA	251+48.62	RT	614	
STA	7+11.92	TO	STA	23+30.32	RT	1,618	US24 RAMP D
STA	3+13.69	TO	STA	13+53.06	RT	1,039	US24 RAMP C
TOTAL						8,734	

MISCELLANEOUS STRUCTURES

STRUCTURE NUMBER	50104650 SLOPE WALL REMOVAL	51100100 SLOPE WALL 4"	X0324028 GROUT FOR USE WITH RIPRAP	X2810812 STONE DUMPED RIPRAP, CLASS B4 (SPECIAL)	Z0004556 HOT-MIX ASPHALT SURFACE REMOVAL (DECK)	Z0016200 DECK SLAB REPAIR (PARTIAL)	Z0065730 SLOPEWALL SLURRY PUMPING
	SQ YD	SQ YD	CU YD	TON	SQ YD	SQ YD	CU YD
STRUCTURE 072-0113							10
STRUCTURE 072-0114					421.7	421.7	
STRUCTURE 072-0115					470.7	470.7	
STRUCTURE 072-0116	200	200					35
STRUCTURE 072-0117							6
STRUCTURE 072-0124							25
STRUCTURE 072-0125			41.7	62.5			5
TOTALS:	200	200	42	63	892	892	81

BARRIER / GUARDRAIL ITEMS

LOCATION		60600605 CONCRETE CURB, TYPE B (FOOT)	63000001 STEEL PLATE BEAM GUARDRAIL, TY A, 6' POSTS (FT)	63100045 TRAFFIC BARRIER TERMINAL, TY 2 (EACH)	63100085 TRAFFIC BARRIER TERMINAL, TY 6 (EACH)	63100167 TRAFFIC BARRIER TERMINAL, TY 1 (SPECIAL) TANGENT (EACH)	63100169 TRAFFIC BARRIER TERMINAL, TY 1 (SPECIAL) FLARED (EACH)	78200005 GUARDRAIL REFLECTORS, TY A (EACH)	72501000 TERMINAL MARKER - DIRECT APPLIED (EACH)	Z0001002 GUARDRAIL AGGREGATE EROSION CONTROL (TON)	X0326401 BARRIER WALL REMOVAL (FOOT)	X6370050 CONCRETE BARRIER WALL (SPECIAL) (FOOT)
SOUTHBOUND												
STA 522+26.45 (SB I474) TO STA 56+66.16 (SL I474)	LT	15.0	675.0		1.0	1.0		11.0	1.0	83.2		
STA 85+74.93 (ROADWAY B) TO STA 56+86.92 (SL I474)	RT	15.0	312.5		1.0	1.0		5.0	1.0	43.2		
STA 59+17.3 TO STA 63+83.76	RT	15.0	392.7		2.0			6.0		94.5		
STA 60+03.12 TO STA 63+65.01	LT	15.0	275.0		1.0	1.0		5.0	1.0	47.6		
STA 71+62.09 TO STA 80+99.56	RT		925.0	1.0	1.0			14.0		168.2		
STA 110+38.99 TO STA 114+00.88	LT	15.0	275.0		1.0	1.0		5.0	1.0	47.2		
STA 110+38.99 TO STA 114+00.88	RT	15.0	275.0		1.0	1.0		5.0	1.0	42.8		
STA 115+57.22 TO STA 117+31.62	RT		125.0	1.0	1.0			3.0		23.6		
STA 219+07.11 TO STA 222+56.50	LT	15.0	262.5		1.0	1.0		5.0	1.0	44.8		
STA 245+20.84 TO STA 251+40.31	RT	15.0	537.5		1.0	1.0		8.0	1.0	65.4		
STA 247+76.36 TO STA 251+48.23	LT	15.0	287.5		1.0	1.0		5.0	1.0	50.7		
STA 345+40.27 TO STA 350+52.16	RT	15.0	425.0		1.0	1.0		7.0	1.0	53.5		
STA 346+35.93 TO STA 349+85.32	LT	15.0	262.5		1.0	1.0		5.0	1.0	46.9		
STA 373+27.43. TO STA 377+27.32	LT	15.0	312.5		1.0	1.0		5.0	1.0	42.2		
STA 381+42.85 TO STA 384+79.74	LT	15.0	250.0		1.0	1.0		4.0	1.0	43.6		
STA 381+55.14 TO STA 384+91.96	RT	15.0	250.0		1.0	1.0		4.0	1.0	36.1		
STA 59+50.42 TO STA 62+74.81	RT	15.0	237.5		1.0	1.0		4.0	1.0	34.7		
STA 60+01.21 TO STA 62+75.24	LT	15.0	187.5		1.0		1.0	4.0	1.0	71.4		
NORTHBOUND												
STA 426+55.88 (NB I474) TO STA 56+30.21 (SL I474)	LT	15.0	125.0	1.0	1.0			3.0		17.5		
STA 164+91.46 (ROADWAY A) TO STA 56+50.12 (SL I474)	RT	15.0	125.0	1.0	1.0			3.0		17.5		
STA 58+63.85 TO STA 63+27.24	LT	15.0	389.7		2.0			6.0		94.3		
STA 58+82.98 TO STA 62+44.87	RT	15.0	275.0		1.0	1.0		5.0	1.0	47.5		
STA 71+49.25 TO STA 74+86.14	RT	15.0	250.0		1.0	1.0		5.0	1.0	42.9		
STA 71+59.81 TO STA 86+34.96	LT	15.0	1337.5		1.0	1.0		10.0	1.0	150.0		
STA 82+67.99 TO STA 86+18.07	RT		212.5	1.0		1.0		4.0	1.0	37.5		
STA 108+85.47 TO STA 114+09.87	LT		475.0	1.0	1.0			7.0		52.6		
STA 109+09.34 TO STA 114+08.74	RT		425.0	1.0	1.0			6.0		50.1		
STA 115+50.49 TO STA 118+99.88	RT	15.0	262.5		1.0	1.0		5.0	1.0	37.2		
STA 115+51.61 TO STA 118+88.5	LT	15.0	250.0		1.0	1.0		5.0	1.0	36.0		
STA 219+62.84 TO STA 222+87.24	LT		275.0	1.0	1.0			5.0		32.5		
STA 219+70.07 TO STA 222+69.47	RT		250.0	1.0	1.0			5.0		30.0		
STA 225+16.92 TO STA 228+66.31	RT	15.0	262.5		1.0	1.0		5.0	1.0	47.5		
STA 225+36.93 TO STA 230+73.82	LT	15.0	450.0		1.0	1.0		7.0	1.0	61.0		
STA 250+24.87 TO STA 251+64.198	LT		87.5	1.0	1.0			2.0		27.9		
STA 253+74.25 TO STA 256+75.68	RT	15.0	212.5		1.0	1.0		4.0	1.0	32.2		
STA 253+80.25 TO STA 264+47.10	LT	15.0	962.5		1.0	1.0		8.0	1.0	183.1		
STA 360+52.46 TO STA 364+25.62	RT	15.0	287.5		1.0	1.0		5.0	1.0	49.9		
STA 379+72.21 TO STA 383+21.60	LT	15.0	262.5		1.0	1.0		5.0	1.0	37.4		
STA 379+72.55 TO STA 383+09.44	RT	15.0	250.0		1.0	1.0		5.0	1.0	35.8		
STA 393+35.34 TO STA 398+84.55	RT	15.0	462.5		1.0	1.0		7.0	1.0	57.3		
STA 393+65.09 TO STA 398+01.88	LT	15.0	350.0		1.0	1.0		6.0	1.0	46.0		
MAXWELL INTERCHANGE												
RAMP D: STA 138+08.07 TO STA 140+16.22 (MAXWELL CONNECTOR STATIONING)	LT	15.0	125.0		1.0	1.0		3.0	1.0	24.9		
RAMP D: STA 138+08.60 TO STA 138+70.50 (MAXWELL CONNECTOR STATIONING)	RT	15.0	12.5	1.0	1.0			2.0		6.2		
RAMP E: STA 25+41.80 TO STA 31+66.19	RT	15.0	537.5		1.0	1.0		8.0	1.0	131.6		
RAMP G: STA 138+12.70 TO STA 141+04.28 (MAXWELL CONNECTOR STATIONING)	LT										100.0	100.0
RAMP G: STA 138+07.84 TO STA 139+94.56 (MAXWELL CONNECTOR STATIONING)	RT		112.5	1.0	1.0			3.0		18.7		
AIRPORT INTERCHANGE												
RAMP A: STA 6+36.09 TO STA 13+40.90	RT		637.5	1.0		1.0		7.0	1.0	144.6		
RAMP C: STA 12+29.24 TO STA 12+79.5	RT		412.5	1.0		1.0		6.0	1.0	48.7		
US 24 INTERCHANGE												
RAMP A: STA 18+25.05 TO 22+26.02	RT	15.0	312.5		1	1		5	1	42.1		
RAMP C: STA 3+20.43 TO STA 13+37.07	RT	15.0	939.1		2.0			8.0		103.3		
RAMP C: STA 11+56.78 TO STA 13+38.85	LT	15.0	100.0		1.0	1.0		2.0	1.0	21.0		
RAMP C: STA 20+75.60 TO STA 22+25.00	RT		100.0	1.0	1.0			2.0		15.0		
RAMP D: STA 7+24.62 TO STA 22+97.95	RT		1537.5		1.0			10.0		157.6		
RAMP E: STA 17+64.91 TO STA 19+51.80	RT	15.0	100.0		1.0	1.0		2.0	1.0	20.9		
RAMP F: STA 2+18.46 TO STA 3+30.36	RT		62.5	1.0	1.0			2.0		11.2		
TOTAL		600.0	19496.5	16.0	54.0	36.0	1.0	288.0	37.0	3008.9	100.0	100.0

PAVEMENT MARKINGS

LOCATION	LENGTH	78003110		X7830070	78003110	X7830070	78003140	X7830076	78003150		X7830078	789009024	X7830090	78003100	X7830060	78300200	78100108		70300100		70300150	X2600002	X6350120
		PREFORMED PLASTIC PAVEMENT MARKING,TYPE B - 4"			PREFORMED PLASTIC PAVEMENT MARKING, TYPE B - 6"		PREFORMED PLASTIC PAVEMENT MARKING, TYPE B - 8"		PREFORMED PLASTIC PAVEMENT MARKING, TYPE B - 12"			PREFORMED PLASTIC PAVEMENT MARKING, TYPE B - 24"		PREFORMED PLASTIC PAVEMENT MARKING, TYPE B - LETTERS AND SYMBOLS		RAISED REFLECTIVE PAVEMENT MARKERS			SHORT-TERM PAVEMENT MARKING (1 APPLICATION)		SHORT TERM PAVEMENT MARKING REMOVAL	RECOVERABLE DELINIATORS	DELINIATOR REMOVAL
		LINE 4" WHITE SOLID	LINE 4" YELLOW SOLID	GROOVING FOR RECESSED PVT MKG 5"	LINE 6" WHITE SKIP-DASH	GROOVING FOR RECESSED PVT MKG 7"	LINE 8" WHITE SOLID	GROOVING FOR RECESSED PVT MKG 9"	LINE 12" YELLOW SOLID	LINE 12" WHITE SOLID (CHEVRON)	GROOVING FOR RECESSED PVT MKG 13"	LINE 24" WHITE SOLID (STOP BAR)	GROOVING FOR RECESSED PVT MKG 25"	WHITE	GROOVING FOR RECESSED PAVEMENT MARKINGS, LETTERS AND SYMBOLS	REMOVAL	1-WAY CRYSTAL	1 -WAY AMBER	4" WHITE	4" YELLOW			
IL 474	FT	FT	FT	FT	FT	FT	FT	FT	FT	FT	FT	FT	FT	SQ.FT	SQ.FT	EACH	EACH	EACH	FT	FT	SQ. FT	EACH	EACH
NORTHBOUND / WESTBOUND																							
FROM STA. 418+52.52 TO STA. 419+93.00	140.5	140	140	281	35	35										2	2		18	6	8	0	0
FROM STA. 419+93.00 TO STA. 428+27.60 (BK)	834.6	835	-	835	209	209	835	835		472	472					10	10		109		36	2	2
FROM STA. 157+10.01 TO STA. 158+10.60	100.6	101	101	201	25	25										1	1		13	4	6	0	0
FROM STA. 158+10.60 TO STA. 166+42.30 (BK)	831.7	-	832	832	208	208	832	832								10	10		76	33	36	2	2
FROM STA. 56+26.60 (AH)x2 TO STA. 85+89.70	2,963.1	2,963	2,963	5,926	1,482	1,482										37	37		388	119	169	7	7
FROM STA. 85+89.70 TO STA. 249+00.00 (BK)	16,310.3	16,310	16,310	32,621	4,078	4,078										204	204		2,135	652	929	41	41
FROM STA. 248+99.00 (AH) TO STA. 449+28.00 (BK)	20,029.0	20,029	20,029	40,058	5,007	5,007										250	250		2,622	801	1,141	50	50
FROM STA. 56+08.00 (AH) TO STA. 62+65.41	657.4	657	657	1,315	164	164										8	8		86	26	37	2	2
SOUTHBOUND / EASTBOUND																							
FROM STA. 519+32.92 TO STA. 520+83.90	151.0	151	151	302	38	38										2	2		20	6	9	0	0
FROM STA. 520+83.90 TO STA. 528+21.00 (BK)	737.1	-	737	737	184	184	737	737								9	9		67	29	32	2	2
FROM STA. 00+22.07 TO STA. 00+41.50	18.6	19	19	37	9	9										0	0		2	1	1	0	0
FROM STA. 80+41.50 TO STA. 87+88.20 (BK)	746.7	747	-	747	187	187	747	747								9	9		98		33	2	2
FROM STA. 55+37.50 (AH)x2 TO STA. 59+10.00	372.5	373	373	745	186	186	745	745								5	5		49	15	21	1	1
FROM STA. 59+10.00 TO STA. 80+49.00	2,139.0	2,139	2,139	4,278	1,070	1,070										27	27		280	36	122	5	5
FROM STA. 80+49.00 TO STA. 248+99.70 (BK)	16,850.7	16,851	16,851	33,701	4,213	4,213										211	211		2,206	674	960	42	42
FROM STA. 248+98.90 (AH) TO STA. 449+28.00 (BK)	20,029.1	20,029	20,029	40,058	5,007	5,007										250	250		2,622	801	1,141	50	50
FROM STA. 56+08.00 (AH) TO STA. 62+80.81	672.8	673	673	1,346	168	168										8	8		88	27	38	2	2
FARMINGTON EXIT RAMPS																							
RAMP A																							
FROM STA. 0+00 TO STA. 2+85.00	285.0						71	71								14	14					SEE	2
FROM STA. 2+85.00 TO STA. 6+79.00	394.0						788	788		199	199					39	39					RAMP	4
FROM STA. 6+79.00 TO STA. 22+04.00	1,525.0	1,525	1,525	3,050												38		38	61	51	41	DELINEATOR	8
FROM STA. 22+04.00 TO STA. 27+00.00	496.0	496		496			124	124								12	12					SCHEDULE	9
RAMP D																							
FROM STA. -1+95.00 TO STA. +75.00	270.0						68	68														FOR	3
FROM STA. +75.00 TO STA. 2+14.00	139.0						278	278		119	119					7	7					RAMP	17
FROM STA. 2+14.00 TO STA. 13+86.00	1,172.0	1,172	1,172	2,344					93		93					29		29	47	43	30	QUANTITIES	
RAMP E																							
FROM STA. 3+00.00 TO STA. 7+18.00	418.0						418	418								31	31						8
FROM STA. 7+18.00 TO STA. 22+50.00	1,532.0	1,532	1,532	3,064												38		38	61	51	41		2
FROM STA. 22+50.00 TO STA. 28+64.00	614.0						1,228	1,228								31	31						5
FROM STA. 28+64.00 TO STA. 36+03.00	739.0						185	185															
RAMP G																							
FROM STA. -+74.00 TO STA. 1+89.00	263.0	263	526	789					92		92					5		5		21	7		
FROM STA. 1+89.00 TO STA. 13+22.00	1,133.0	1,133	1,133	2,266												33		33	45	45	30		19
FROM STA. 13+22.00 TO STA. 14+41.00	119.0						238	238								6	6						
FROM STA. 14+41.00 TO STA. 16+58.00	217.0						54	54															
AIRPORT ROAD RAMPS																							
RAMP A																							
FROM STA. 0+00 TO STA. 3+03.00	303.0						76	76								15	15						4
FROM STA. 3+03.00 TO STA. 6+63.00	360.0						720	720		185	185					36	36						4
FROM STA. 6+63.00 TO STA. 20+85.00	1,422.0	1,422	1,422	2,844										24	30	36		36	57	57	38		7
FROM STA. 20+85.00 TO STA. 21+92.00	107.0	156	113	269			183	183		82	82	27	27	31	44				6	5	4		3
RAMP B																							
FROM STA. +36.00 TO STA. 1+55.00	119.0	264	86	350			371	371		90	90	23	23	31	44				11	3	5		
FROM STA. 1+55.00 TO STA. 22+47.00	2,092.0	2,092	2,092	4,184										12	15	52		52	84	84	56		16
FROM STA. 22+47.00 TO STA. 26+82.00	435.0						870	870								11	11						
FROM STA. 26+82.00 TO STA. 34+09.00	727.0						182	182															
RAMP C																							
FROM STA. +35.00 TO STA. 1+53.00	118.0	160	123	283			285	285		118	118			16	22					5	2		
FROM STA. 1+53.00 TO STA. 11+82.00	1,029.0	1,029	1,029	2,058												26		26	41	41	27		9
FROM STA. 11+82.00 TO STA. 17+29.00	547.0						1,094	1,094								14	14						
FROM STA. 17+29.00 TO STA. 24+96.00	767.0						192	192															
RAMP D																							
FROM STA. 0+00 TO STA. 2+66.00	266.0						67	67								13	13						
FROM STA. 2+66.00 TO STA. 6+75.00	409.0						818	818		200	200					41	41						
FROM STA. 6+75.00 TO STA. 25+10.00	1,835.0	1,835	1,835	3,670										24	29	46		46	73	73	49		22
FROM STA. 25+10.00 TO STA. 26+55.00	145.0	145	145	290			435	435				12	12	74	124	4		4	73	6	26		
FROM STA. 26+55.00 TO STA. 27+19.00	64.0	107	30	137			355	355		110	110	49	49	16	22	2		2	4	1	2		
ADAMS ST. EXIT RAMPS																							
RAMP A																							
FROM STA. +46.00 TO STA. +88.30	42.3	97	44	141			170	170								47		47	4	2	2		14
FROM STA. +88.30 TO STA. 19+12.20	1,823.9	1,824	1,824	3,648																			
FROM STA. 19+12.20 TO STA. 24+38.20	526.0						1,052	1,052								26	26						
FROM STA. 24+38.20 TO STA. 30+69.20	631.0						158	158															
RAMP B																							
FROM STA. 0+00 TO STA. 4+10.00	410.0						103	103								21	21						
FROM STA. 4+10.00 TO STA. 7+88.00	378.0						756	756		252	252					38	38						15
FROM STA. 7+88.00 TO STA. 16+69.00	881.0	881	881	1,762												22		22	35	35	23		
FROM STA. 16+69.00 TO STA. 20+16.00	347.0						347	347								9	9						
FROM STA. 20+16.00 TO STA. 20+93.00	77.0						19	19															
RAMP C																							
FROM STA. 2+69.00 TO STA. 3+83.00	114.0	114		114			114	114								3	3						
FROM STA. 3+83.00 TO STA. 16+07.00	1,224.0	1,224	1,224	2,448												31		31	49	49	33		4
FROM STA. 16+07.00 TO STA. 18+24.00	217.0						434	434								11	11						
FROM STA. 18+24.00 TO STA. 27+65.00	941.0						235	235															
RAMP D																							
FROM STA. 0+00 TO STA. 2+87.00	287.0						72	72								14	14						
FROM STA. 2+87.00 TO STA. 8+56.00	569.0						1,138	1,138		432	432					57	57						8
FROM STA. 8+56.00 TO STA. 23+17.00	1,461.0	1,461	1,461	2,922												37		37	58	58	39		
FROM STA. 23+17.00 TO STA. 24+50.00	133.0	183	133	316			260	260				40	40			3		3	7	5	4		
RAMP E																							
FROM STA. -+34.00 TO STA. +76.00	110.0	110		110			110	110								3	3		4		1		
FROM STA. +76.00 TO STA. 14+80.00	1,404.0	1,404	1,404	2,808												35		35	56	56	37		4
FROM STA. 14+80.00 TO STA. 18+66.00	386.0						772	772								19	19						14
FROM STA. 18+66.00 TO STA. 26+67.00	801.0						200	200															
RAMP F																							
FROM STA. 0+00 TO STA. 3+05.00	305.0						76	76								15	15						
FROM STA. 3+05.00 TO STA. 6+58.00	353.0						706	706		186	186					35	35						4
FROM STA. 6+58.00 TO STA. 23+63.00	1,705.0	1,705	1,705	3,410												43		43	68	58	45		14
FROM STA. 23+63.00 TO STA. 24+25.00	62.0	62		62			16	16								2	2						
SUBTOTALS:		104,412	103,442	207,853	22,265	22,265	19,730	19,730	185	2,445	2,630	150	150	228	329	2,093	1,568	525	11,726	4,061	5,262	209	428
PROJECT TOTAL:		207,853		207,853	22,265	22,265	19,730	19,730	2,630		2,630	150	150	228	329	2,093	2,093		15,786		5,262	472	428

MAINLINE ACCOUNTS FOR INSIDE EDGE, SKIP-DASH AND OUTSIDE EDGE ONLY. ALL OTHER TYPES OF PAVEMENT MARKINGS APPEARING BECAUSE OF A RAMP ARE ACCOUNTED FOR AT THAT RAMP'S SECTION.

MODEL: Default
FILE NAME: pw:\\dan-wsm.cdot.illinois.gov:PWIDOT\Documents\IDOT Offices\District 4\Projects\D4_68C45\CADData\Design\Sheets\fcs.dgn

USER NAME = jetteam	DESIGNED -	REVISED -	
	DRAWN -	REVISED -	
PLOT SCALE = 100.0058 ' / in.	CHECKED -	REVISED -	
PLOT DATE = 3/24/2021	DATE -	REVISED -	

STATE OF ILLINOIS
DEPARTMENT OF TRANSPORTATION

SCHEDULE OF QUANTITIES

SCALE: | SHEET 17 OF 21 SHEETS | STA. TO STA.

F.A.U RTE.	SECTION	COUNTY	TOTAL SHEETS	SHEET NO.
474	72[1RS-3;(2-4)RS-2]	PEORIA	240	34
		CONTRACT NO. 68C45		
		ILLINOIS FED. AID PROJECT		

TEMPORARY PAVEMENT MARKINGS

LOCATION	70300220 TEMPORARY PAVEMENT MARKING-LINE 4" LINE 4" WHITE SOLID	70300220 TEMPORARY PAVEMENT MARKING-LINE 4" LINE 4" YELLOW SOLID	70300240 TEMPORARY PAVEMENT MARKING-LINE 6" LINE 6" WHITE SKIP-DASH	70300250 TEMPORARY PAVEMENT MARKING-LINE 8" LINE 8" WHITE SOLID	70300260 TEMPORARY PAVEMENT MARKING-LINE 12" LINE 12" YELLOW SOLID	70300260 TEMPORARY PAVEMENT MARKING-LINE 12" LINE 12" WHITE SOLID (CHEVRON)	70300280 TENPORARYC PAVEMENT MARKING-LINE 24" LINE 24" WHITE SOLID (STOP BAR)	70300210 TEMPORARY PAVEMENT MARKING LETTERS AND SYMBOLS WHITE
	FT	FT	FT	FT	FT	F"	FT	SQ FT
IL 474								
NORTHBOUND / WESTBOUND								
FROM STA. 418+52.52 TO STA. 419+93.00	140	140	35					
FROM STA. 419+93.00 TO STA. 420+27.60 (BK)	835	-	209	835		472		
FROM STA. 157+10.01 TO STA. 158+10.60	101	101	25					
FROM STA. 158+10.60 TO STA. 166+42.30 (BK)	-	832	208	832				
FROM STA. 56+26.60 (AH)x2 TO STA. 85+89.70	2,963	2,963	1,482					
FROM STA. 85+89.70 TO STA. 249+00.00 (BK)	16,310	16,310	4,078					
FROM STA. 248+99.00 (AH) TO STA. 449+28.00 (BK)	20,029	20,029	5,007					
FROM STA. 56+08.00 (AH) TO STA. 62+65.41	657	657	164					
SOUTHBOUND / EASTBOUND								
FROM STA. 519+32.92 TO STA. 520+83.90	151	151	38					
FROM STA. 520+83.90 TO STA. 528+21.00 (BK)	-	737	184	737				
FROM STA. 80+22.87 TO STA. 80+41.50	19	19	5					
FROM STA. 80+41.50 TO STA. 87+88.20 (BK)	747	-	187	747				
FROM STA. 55+37.50 (AH)x2 TO STA. 59+09.90	373	373	186	745				
FROM STA. 59+09.90 TO STA. 80+49.00	2,139	2,139	1,070					
FROM STA. 80+49.00 TO STA. 248+99.70 (BK)	16,851	16,851	4,213					
FROM STA. 248+98.90 (AH) TO STA. 449+28.00 (BK)	20,029	20,029	5,007					
FROM STA. 56+08.00 (AH) TO STA. 62+00.01	673	673	160					
FARMINGTON EXIT RAMPS								
RAMP A								
FROM STA. 0+00 TO STA. 2+85.00				71				
FROM STA. 2+85.00 TO STA. 6+79.00				788		199		
FROM STA. 6+79.00 TO STA. 22+04.00	1,525	1,525						
FROM STA. 22+04.00 TO STA. 27+00.00	496			124				
RAMP D								
FROM STA. -1+95.00 TO STA. +75.00				68				
FROM STA. +75.00 TO STA. 2+14.00				278		119		
FROM STA. 2+14.00 TO STA. 13+86.00	1,172	1,172			93			
RAMP E								
FROM STA. 3+00.00 TO STA. 7+18.00				418				
FROM STA. 7+18.00 TO STA. 22+50.00	1,532	1,532						
FROM STA. 22+50.00 TO STA. 28+64.00				1,228				
FROM STA. 28+64.00 TO STA. 36+03.00				185				
RAMP G								
FROM STA. -+74.00 TO STA. 1+89.00	263	526			92			
FROM STA. 1+89.00 TO STA. 13+22.00	1,133	1,133						
FROM STA. 13+22.00 TO STA. 14+41.00		0		238				
FROM STA. 14+41.00 TO STA. 16+58.00				54				
AIRPORT ROAD RAMPS								
RAMP A								
FROM STA. 0+00 TO STA. 3+03.00				76				
FROM STA. 3+03.00 TO STA. 6+63.00				720		185		
FROM STA. 6+63.00 TO STA. 20+85.00	1,422	1,422						24
FROM STA. 20+85.00 TO STA. 21+92.00	156	113		183		82	27	31
RAMP B								
FROM STA. +36.00 TO STA. 1+55.00	264	86		371		90	23	31
FROM STA. 1+55.00 TO STA. 22+47.00	2,092	2,092						12
FROM STA. 22+47.00 TO STA. 26+82.00				870				
FROM STA. 26+82.00 TO STA. 34+09.00				182				
RAMP C								
FROM STA. +35.00 TO STA. 1+53.00	160	123		285		118		16
FROM STA. 1+53.00 TO STA. 11+82.00	1,029	1,029						
FROM STA. 11+82.00 TO STA. 17+29.00				1,094				
FROM STA. 17+29.00 TO STA. 24+96.00				192				
RAMP D								
FROM STA. 0+00 TO STA. 2+66.00				67				
FROM STA. 2+66.00 TO STA. 6+75.00				818		200		
FROM STA. 6+75.00 TO STA. 25+10.00	1,835	1,835						24
FROM STA. 25+10.00 TO STA. 26+55.00	145	145		435			12	74
FROM STA. 26+55.00 TO STA. 27+19.00	107	30		355		110	49	16
ADAMS ST. EXIT RAMPS								
RAMP A								
FROM STA. TO STA. +88.30	97	44		170				
+88.30 19+12.20	1,824	1,824						
FROM STA. 19+12.20 TO STA. 24+38.20				1,052				
FROM STA. 24+38.20 TO STA. 30+69.20				158				
RAMP B								
FROM STA. 0+00 TO STA. 4+10.00				103				
FROM STA. 4+10.00 TO STA. 7+88.00				756		252		
FROM STA. 7+88.00 TO STA. 16+69.00	881	881						
FROM STA. 16+69.00 TO STA. 20+16.00				347				
FROM STA. 20+16.00 TO STA. 20+93.00				19				
RAMP C								
FROM STA. 2+69.00 TO STA. 3+83.00	114			114				
FROM STA. 3+83.00 TO STA. 16+07.00	1,224	1,224						
FROM STA. 16+07.00 TO STA. 18+24.00				434				
FROM STA. 18+24.00 TO STA. 27+65.00				235				
RAMP D								
FROM STA. 0+00 TO STA. 2+87.00				72				
FROM STA. 2+87.00 TO STA. 8+56.00				1,138		432		
FROM STA. 8+56.00 TO STA. 23+17.00	1,461	1,461						
FROM STA. 23+17.00 TO STA. 24+50.00	183	133		260			40	
RAMP E								
FROM STA. -+34.00 TO STA. +76.00	110			110				
FROM STA. +76.00 TO STA. 14+80.00	1,404	1,404						
FROM STA. 14+80.00 TO STA. 18+66.00				772				
FROM STA. 18+66.00 TO STA. 26+67.00				200				
RAMP F								
FROM STA. 0+00 TO STA. 3+05.00				76				
FROM STA. 3+05.00 TO STA. 6+58.00				706		186		
FROM STA. 6+58.00 TO STA. 23+63.00	1,705	1,705						
FROM STA. 23+63.00 TO STA. 24+25.00	62	0		16				
SUBTOTALS:	104,412	103,442	22,265	19,730	185	2,445	150	228
PROJECT TOTAL:	207,853		22,265	19,730	2,630		150	228

MAINLINE ACCOUNTS FOR INSIDE EDGE, SKIP-DAH AND OUTSIDE EDGE ONLY. ALL OTHER TYPES OF PAVEMENT MARKINGS APPEARING BECAUSE OF A RAMP ARE ACCOUNTED FOR AT THAT RAMP'S SECTION.

RAMP'S DELINEATOR SCHEDULE

LOCATION				SPACING	NO. OF DELINEATORS	REFLECTOR COLOR	NO. OF AMBER REFLECTORS	NO. OF CLEAR REFLECTORS
FIRST POST OF CURVE		LAST POST OF CURVE		FT	#	W=CLEAR / Y=AMBER		
FARMINGTON EXIT RAMPS								
RAMP A								
FROM STA.	7+20.00	TO STA.	11+86.00	80	7	Y	7	-
FROM STA.	15+73.00	TO STA.	16+73.00	50	3	W	-	3
FROM STA.	17+70.00	TO STA.	21+40.00	65	7	Y	7	-
RAMP D								
FROM STA.	2+45.00	TO STA.	6+10.00	80	6	Y	6	-
FROM STA.	6+15.00	TO STA.	13+04.00	40	19	Y	19	-
RAMP E								
FROM STA.	7+35.00	TO STA.	12+79.00	80	8	Y	8	-
FROM STA.	15+18.00	TO STA.	16+63.00	50	4	W	-	4
FROM STA.	18+69.00	TO STA.	22+29.00	65	7	Y	7	-
RAMP G								
FROM STA.	1+96.00	TO STA.	11+35.00	40	27	Y	27	-
FROM STA.	11+91.00	TO STA.	13+15.00	65	3	Y	3	-
AIRPORT RD. EXIT RAMPS								
RAMP A								
FROM STA.	7+40.00	TO STA.	12+76.00	80	8	Y	8	-
FROM STA.	15+15.00	TO STA.	17+88.00	55	6	W	-	6
RAMP B								
FROM STA.	6+00.00	TO STA.	13+08.00	80	10	W	-	10
FROM STA.	15+74.00	TO STA.	21+84.00	70	10	Y	10	-
RAMP C								
FROM STA.	4+38.00	TO STA.	11+40.00	40	17	Y	17	-
FROM STA.	10+78.00	TO STA.	11+42.00	65	2	Y	2	-
RAMP D								
FROM STA.	7+63.00	TO STA.	9+08.00	80	3	Y	3	-
FROM STA.	9+08.00	TO STA.	12+39.00	70	6	Y	6	-
FROM STA.	12+39.00	TO STA.	15+61.00	50	8	Y	8	-
FROM STA.	15+61.00	TO STA.	19+97.00	65	6	Y	6	-
BARTONVILLE EXIT RAMPS								
RAMP A								
FROM STA.	7+40.00	TO STA.	10+88.00	50	8	W	-	8
FROM STA.	14+49.00	TO STA.	18+64.00	80	6	Y	6	-
RAMP B								
FROM STA.	8+24.00	TO STA.	16+52.00	85	11	Y	11	-
RAMP C								
FROM STA.	4+20.00	TO STA.	6+71.00	65	5	Y	5	-
RAMP D								
FROM STA.	10+10.00	TO STA.	15+58.00	80	6	Y	6	-
FROM STA.	16+40.00	TO STA.	18+55.00	50	5	Y	5	-
RAMP E								
FROM STA.	+85.00	TO STA.	2+10.00	35	5	Y	5	-
FROM STA.	6+54.00	TO STA.	14+30.00	40	22	Y	22	-
RAMP F								
FROM STA.	7+10.00	TO STA.	12+78.00	55	12	Y	12	-
FROM STA.	12+78.00	TO STA.	16+06.00	40	9	Y	9	-
FROM STA.	21+50.00	TO STA.	23+03.00	30	7	Y	7	-
					263		232	31

ADA IMPROVEMENTS

LOCATION	44000600	44003100	44000500	42400410	42400800	60605000	89500400	87900100	81028320	X8760201	87301225
	SIDEWALK REMOVAL	MEDIAN REMOVAL	CURB & GUTTER REMOVAL	PCC SIDEWALK 8"	DETECTABLE WARNINGS	CC&G 6.24	RELOCATE EXISTING PEDESTRAIN PUSH BUTTON	DRILL EXISTING FOUNDATION	UNDERGROUND CONDUIT, PVC, 1" DIA.	PEDESTRIAN PUSHBUTTON POST	ELECTRIC CABLE IN CONDUIT, SIGNAL NO. 14 3C
	SQ FT	SQ FT	FT	SQ FT	SQ FT	FT	EA	EA	FT	EA	FT
1	69		17	94	10	17					
2	88			88	10						
3	105		7	152	10	7					
4	70		7	144	10	7					
5	63		7	150	10	7					
6	75		7	112	10	7					
7	61			59	10			1	11	1	105
8		105		105	20						
9	125		25	150	10	25	1				
Totals	655	105	70	1053	100	70	1	1	11	1	105

JOBSITE QUANTITIES

LOCATION	67100100	25000750	Z0013798	X7010216	70103815	67000400	Z0016702	Z0048665
	MOBILIZATION	MOWING	CONSTRUCTION LAYOUT	TRAFFIC CONTROL AND PROTECTION, (SPECIAL)	TRAFFIC CONTROL SURVEILLANCE	ENGINEER'S FIELD OFFICE, TY A	DETOUR SIGNING	RAILROAD PROTECTIVE LIABILITY INSURANCE
	L SUM	ACRE	L SUM	LSUM	CAL DAY	CAL MO	L SUM	L SUM
JOBSITE	1.0	124.5	1.0	1.0	180.0	18.0	1.0	1.0

70107025 - CHANGEABLE MESSAGE SIGN	
LOCATION	CAL DAY
US 24 NB	300.0
US 24 SB	300.0
I-74 WB	300.0
I-74 EB	300.0
IL 6 SB	300.0
AIRPORT ROAD NB	300.0
AIRPORT ROAD SB	300.0
MAXWELL CONNECTOR EB	300.0
TOTAL =	2400.0

EROSION CONTROL

LOCATION	LENGTH	WIDTH	AREA	25000210 SEEDING, CLASS 2A	25000400 NITROGEN FERTILIZER NUTRIENT	25000500 PHOSPHORUS FERTILIZER NUTRIENT	25000600 POTASSIUM FERTILIZER NUTRIENT	25100360 EROSION CONTROL BLANKET	28000305 TEMPORARY DITCH CHECKS	28000400 PERIMETER EROSION BARRIER
STATION	FT	FT	SQ FT	ACRE	POUND	POUND	POUND	SQ YD	FOOT	FOOT
NORTHBOUND										
STA 63+00 LT	25.0	25.0	625.0	0.01	1.3	1.3	1.3	69.4		50.0
STA 72+00 LT	25.0	25.0	625.0	0.01	1.3	1.3	1.3	69.4		50.0
STA 80+44 LT	75.0	25.0	1875.0	0.04	3.9	3.9	3.9	208.3		253.0
STA 90+10 LT	92.0	25.0	2300.0	0.05	4.8	4.8	4.8	255.6		
STA 116+11 LT	18.0	25.0	450.0	0.01	0.9	0.9	0.9	50.0		
STA 131+27	30.0	64.0	1920.0	0.04	4.0	4.0	4.0	213.3		20.0
STA 131+00 RT	27.0	52.0	1404.0	0.03	2.9	2.9	2.9	156.0		
STA 131+61 LT	20.0	25.0	500.0	0.01	1.0	1.0	1.0	55.6		
STA 131+87 LT	20.0	16.0	320.0	0.01	0.7	0.7	0.7	35.6		
STA 158+46 TO 158+95 LT	50.0	8.0	400.0	0.01	0.8	0.8	0.8	44.4	10.0	
STA 159+00 LT	20.0	25.0	500.0	0.01	1.0	1.0	1.0	55.6		
STA 201+00 LT	155.0	25.0	3875.0	0.09	8.0	8.0	8.0	430.6		
STA 205+37 LT	140.0	25.0	3500.0	0.08	7.2	7.2	7.2	388.9		
STA 211+00 LT	30.0	25.0	750.0	0.02	1.5	1.5	1.5	83.3		
STA 211+00 TO 212+70 LT	170.0	8.0	1360.0	0.03	2.8	2.8	2.8	151.1	30.0	
STA 225+41 TO 226+61 LT	VAR	VAR	7100.0	0.16	14.7	14.7	14.7	788.9		110.0
STA 233+10 LT	30.0	25.0	750.0	0.02	1.5	1.5	1.5	83.3		
STA 245+00 TO 246+80 LT	170.0	8.0	1360.0	0.03	2.8	2.8	2.8	151.1		
STA 246+80 TO 249+85 LT	305.0	10.0	3050.0	0.07	6.3	6.3	6.3	338.9		
STA 249+85 TO 252+15 LT	240.0	38.0	9120.0	0.21	18.8	18.8	18.8	1013.3		
STA 253+81 LT	20.0	25.0	500.0	0.01	1.0	1.0	1.0	55.6		
STA 259+10 LT	50.0	25.0	1250.0	0.03	2.6	2.6	2.6	138.9		
STA 259+55 to 261+05 LT	VAR	VAR	6869.0	0.16	14.2	14.2	14.2	763.2		
STA 283+50 LT	50.0	8.0	400.0	0.01	0.8	0.8	0.8	44.4		
STA 292+33 TO 295+91 LT	400.0	20.0	8000.0	0.18	16.5	16.5	16.5	888.9		
STA 312+00 TO 314+36 LT	VAR	VAR	12427.0	0.29	25.7	25.7	25.7	1380.8		
STA 332+00	27.0	64.0	12428.0	0.29	25.7	25.7	25.7	1380.9		
STA 335+07 TO 341+19 LT	VAR	VAR	18052.0	0.41	37.3	37.3	37.3	2005.8		
SOUTHBOUND										
STA 63+73 RT	110.0	25.0	2750.0	0.06	5.7	5.7	5.7	305.6		
STA 71+80 RT	46.0	25.0	1150.0	0.03	2.4	2.4	2.4	127.8		
STA 86+40 RT	60.0	25.0	1500.0	0.03	3.1	3.1	3.1	166.7		
STA 89+20 RT	60.0	25.0	1500.0	0.03	3.1	3.1	3.1	166.7		
STA 98+20 RT	45.0	25.0	1125.0	0.03	2.3	2.3	2.3	125.0		
STA 141+00 RT	22.0	25.0	550.0	0.01	1.1	1.1	1.1	61.1		
STA 150+00 LT	20.0	25.0	500.0	0.01	1.0	1.0	1.0	55.6		
STA 149+00 TO 150+50 RT	150.0	30.0	4500.0	0.10	9.3	9.3	9.3	500.0	30.0	150.0
STA 150+00 RT	50.0	25.0	1250.0	0.03	2.6	2.6	2.6	138.9		
STA 159+00 RT	20.0	25.0	500.0	0.01	1.0	1.0	1.0	55.6		
STA 198+90 TO 201+00 RT	210.0	8.0	1680.0	0.04	3.5	3.5	3.5	186.7	40.0	
STA 201+00 RT	50.0	25.0	1250.0	0.03	2.6	2.6	2.6	138.9		
STA 201+00 LT	22.0	25.0	550.0	0.01	1.1	1.1	1.1	61.1		
STA 226+60 RT	125.0	40.0	5000.0	0.11	10.3	10.3	10.3	555.6		
STA 226+60 RT	25.0	25.0	625.0	0.01	1.3	1.3	1.3	69.4		
STA 226+60 TO 227+60	100.0	8.0	800.0	0.02	1.7	1.7	1.7	88.9	20	
STA 233+60 RT	30.0	25.0	750.0	0.02	1.5	1.5	1.5	83.3		
STA 233+60 TO 234+90 RT	130.0	8.0	1040.0	0.02	2.1	2.1	2.1	115.6		
STA 249+91 TO 250+21 RT	135.0	18.0	2430.0	0.06	5.0	5.0	5.0	270.0		
STA 255+91 TO 257+48	VAR	VAR	9380.0	0.22	19.4	19.4	19.4	1042.2		
STA 261+94 TO 262+90 RT	VAR	VAR	3715.0	0.09	7.7	7.7	7.7	412.8		
STA 279+00 RT	150.0	30.0	4500.0	0.10	9.3	9.3	9.3	500.0		
STA 294+67 TO 295+57 RT	50.0	10.0	500.0	0.01	1.0	1.0	1.0	55.6		
STA 313+48 TO 314+30 RT	VAR	VAR	3950.0	0.09	8.2	8.2	8.2	438.9		
STA 337+72 TO 339+02	VAR	VAR	10527.0	0.24	21.8	21.8	21.8	1169.7		
STA 342+04 TO 342+80 RT	70.0	25.0	1750.0	0.04	3.6	3.6	3.6	194.4		
STA 381+50 LT / RT	200.0	20.0	4000.0	0.09	8.3	8.3	8.3	444.4		
MAXWELL INTERCHANGE										
RAMP D										
STA 3+47 RT	35.0	25.0	875.0	0.02	1.8	1.8	1.8	97.2		
RAMP E										
STA 20+70 LT	86.0	25.0	2150.0	0.05	4.4	4.4	4.4	238.9		
STA 22+50 RT	20.0	25.0	500.0	0.01	1.0	1.0	1.0	55.6		
STA 22+50 TO 27+00	440.0	8.0	3520.0	0.08	7.3	7.3	7.3	391.1	100	
AIRPORT ROAD INTERCHANGE										
RAMP A										
STA 8+20 TO 13+38 RT	VAR	VAR	28400.0	0.65	58.7	58.7	58.7	3155.6		
RAMP B										
STA 23+15 TO 24+20 RT	80.0	25.0	2000.0	0.05	4.1	4.1	4.1	222.2		
STA 27+08 TO 27+90 RT	80.0	25.0	2000.0	0.05	4.1	4.1	4.1	222.2		
RAMP D										
STA 11+50 LT	140.0	8.0	1120.0	0.03	2.3	2.3	2.3	124.4		
US 24 INTERCHANGE										
RAMP E										
STA 3+75 RT	385.0	8.0	3080.0	0.07	6.4	6.4	6.4	342.2		
STA 11+00 LT/ RT	170.0	6.0	1020.0	0.02	2.1	2.1	2.1	113.3		
RAMP F										
STA 4+50 RT	150.0	25.0	3750.0	0.09	7.7	7.7	7.7	416.7		
STA 11+20 LT/ RT	110.0	8.0	880.0	0.02	1.8	1.8	1.8	97.8		
TOTAL				4.99	449.44	449.44	449.44	24169.67	230.00	533.00

MODEL: Default
FILE NAME: pw:\\plannroom.dot.illinois.gov:PWIDOT\Documents\IDOT Offices\District 4\Projects\D-68C45\CADData\Design\Schedules.dgn

USER NAME = noltera	DESIGNED -	REVISED -	
	DRAWN -	REVISED -	
PLOT SCALE = 100.0000 ' / in.	CHECKED -	REVISED -	
PLOT DATE = 3/22/2021	DATE -	REVISED -	

STATE OF ILLINOIS
DEPARTMENT OF TRANSPORTATION

SCHEDULE OF QUANTITIES

SCALE: | SHEET 21 OF 21 SHEETS | STA. TO STA.

F.A.I RTE.	SECTION	COUNTY	TOTAL SHEETS	SHEET NO.
474	72[1RS-3;(2-4)RS-2]	PEORIA	240	38
		CONTRACT NO. 68C45		
		ILLINOIS FED. AID PROJECT		

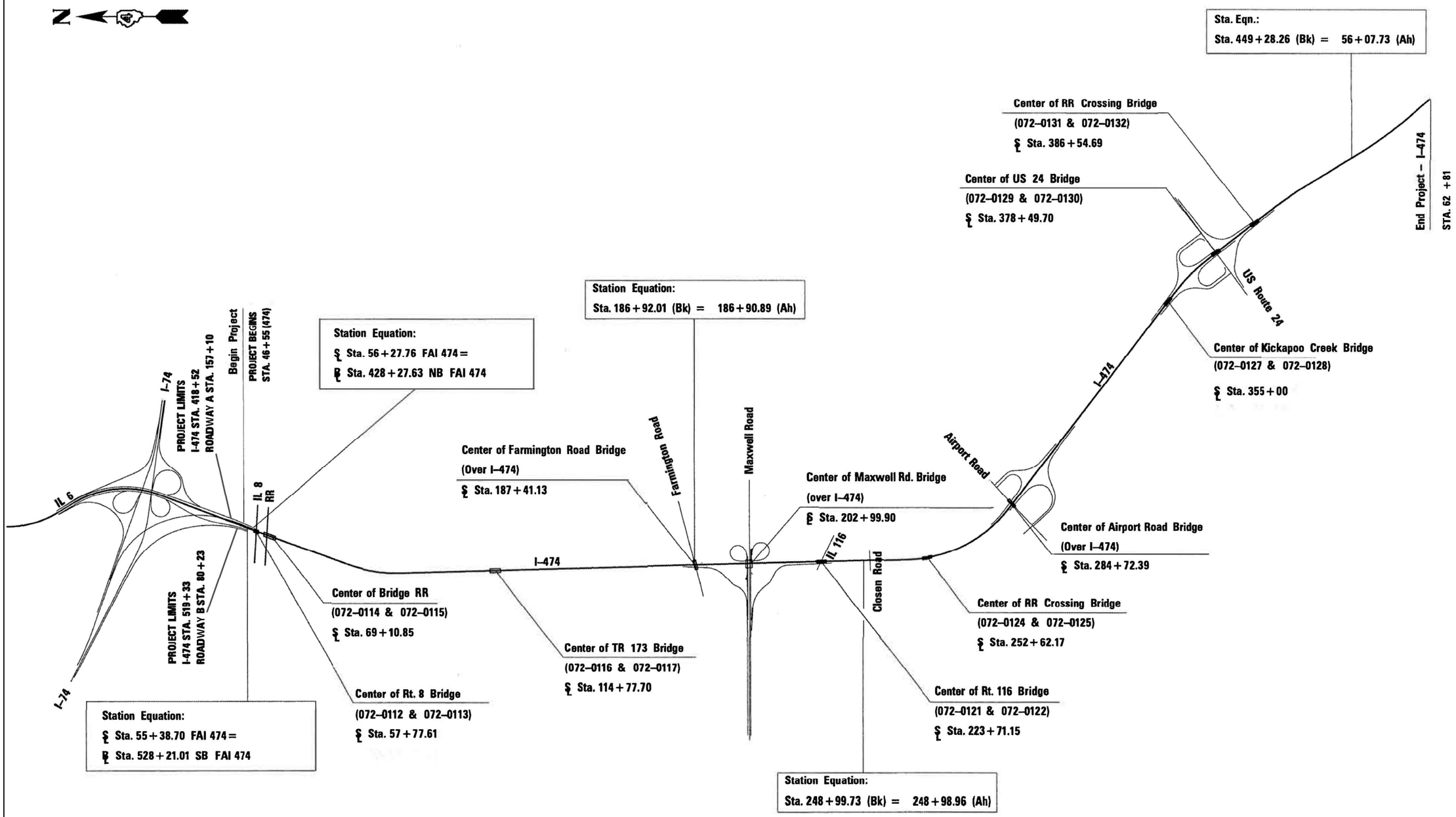

Not to Scale

MODEL: $MODELNAME$
FILE NAME: $FILE1$

USER NAME = $USER$	DESIGNED -	REVISED -	STATE OF ILLINOIS DEPARTMENT OF TRANSPORTATION
	DRAWN -	REVISED -	
PLOT SCALE = $SCALE$	CHECKED -	REVISED -	
PLOT DATE = $DATE$	DATE -	REVISED -	

LINE DIAGRAM

SCALE: SHEET OF SHEETS STA. TO STA.

F.A.I. RTE.	SECTION	COUNTY	TOTAL SHEETS	SHEET NO.
474	72[1RS-3:(2-4)RS-2]	PEORIA	240	39
		CONTRACT NO. 68C45		
		ILLINOIS FED. AID PROJECT		

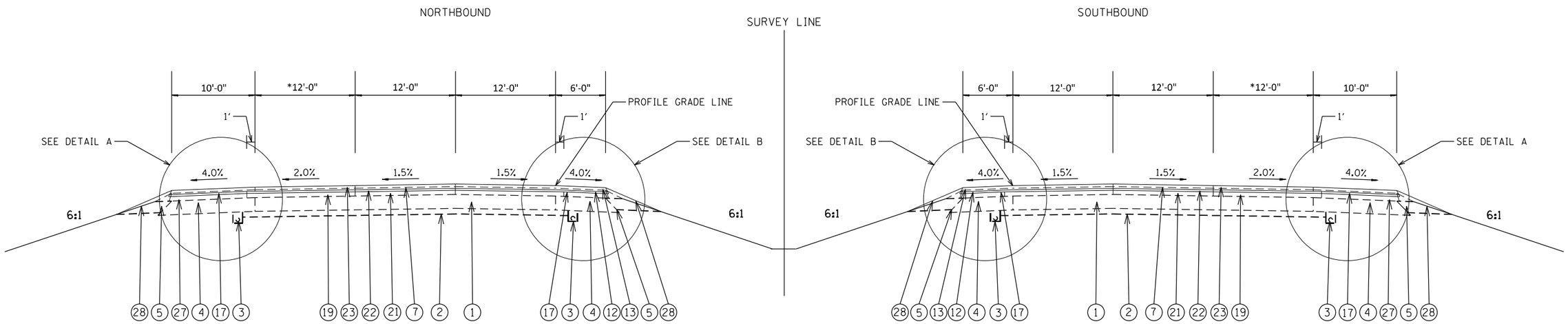

NORMAL TYPICAL SECTION
I-474

STA 56+26.57 TO STA 85+95.78 (SOUTHBOUND)
STA 55+37.52 TO STA 85+95.78 (NORTHBOUND)

•TAPER FROM 12' TO 0'
STA 80+45.78 TO STA 85+95.78 (SOUTHBOUND)
STA 85+39.44 TO STA 90+89.44 (NORTHBOUND)

LEGEND

EXISTING ITEMS

1. EXISTING 8" C.R.P.C.C. PAVEMENT
2. EXISTING 4" STABILIZED SUB-BASE
3. EXISTING 4" PIPE UNDERDRAIN
4. EXISTING BITUMINOUS SHOULDERS
5. EXISTING AGGREGATE SHOULDERS, TYPE B
6. EXISTING OVERLAY, 3 1/4"
7. EXISTING OVERLAY, 3 3/4"

PROPOSED ITEMS

16. HOT-MIX ASPHALT SURFACE REMOVAL, 3/4"
17. HOT-MIX ASPHALT SURFACE REMOVAL, 2"
18. HOT-MIX ASPHALT SURFACE REMOVAL, 3 1/2"
19. HOT-MIX ASPHALT SURFACE REMOVAL, 4"
20. POLYMERIZED HOT-MIX ASPHALT BINDER COURSE, IL-9.5, N70, 2"
21. POLYMERIZED HOT-MIX ASPHALT BINDER COURSE, SMA, 12.5, N80, 2"
22. POLYMERIZED HOT-MIX ASPHALT BINDER COURSE, IL-4.75, N50, 1"
23. POLYMERIZED HOT-MIX ASPHALT SURFACE COURSE, SMA, 12.5, MIX "E", N80, 2"
24. POLYMERIZED HOT-MIX ASPHALT SURFACE COURSE, IL-9.5, MIX "E", N70, 2"
25. HOT MIX ASPHALT SHOULDERS, 3"
26. HOT MIX ASPHALT SHOULDERS, 4'
27. HOT MIX ASPHALT SHOULDERS
28. AGGREGATE SHOULDERS, TYPE B

DETAIL A (OUTSIDE SHOULDER)

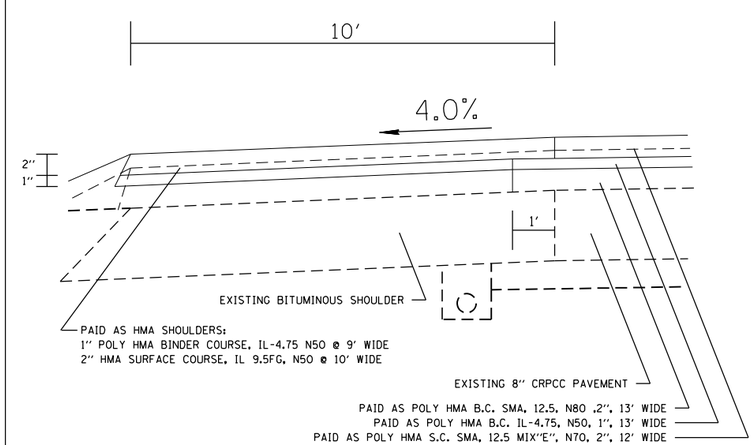

DETAIL B (INSIDE SHOULDER)

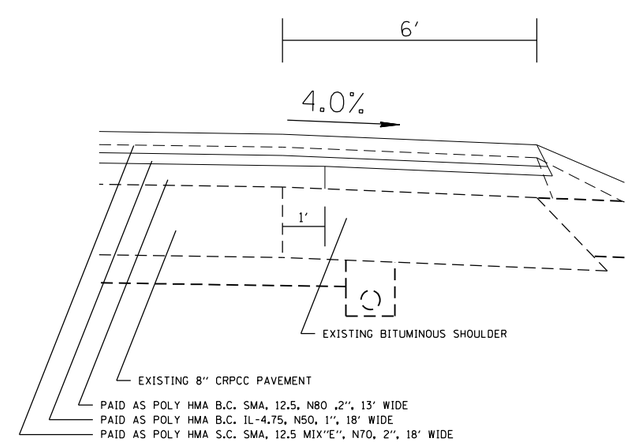

MODEL: $MODELNAME$
FILE NAME: $FILEL$

USER NAME = $USER$	DESIGNED -	REVISED -	
	DRAWN -	REVISED -	
PLOT SCALE = $SCALE$	CHECKED -	REVISED -	
PLOT DATE = $DATE$	DATE -	REVISED -	

STATE OF ILLINOIS
DEPARTMENT OF TRANSPORTATION

PROPOSED & EXISITNG TYPICAL SECTIONS

SCALE: | SHEET OF SHEETS | STA. TO STA.

F.A.I. RTE.	SECTION	COUNTY	TOTAL SHEETS	SHEET NO.
474	72-(1)RS-3;(2,3,4)RS-2	PEORIA	240	40
		CONTRACT NO. 68C45		
		ILLINOIS	FED. AID PROJECT	

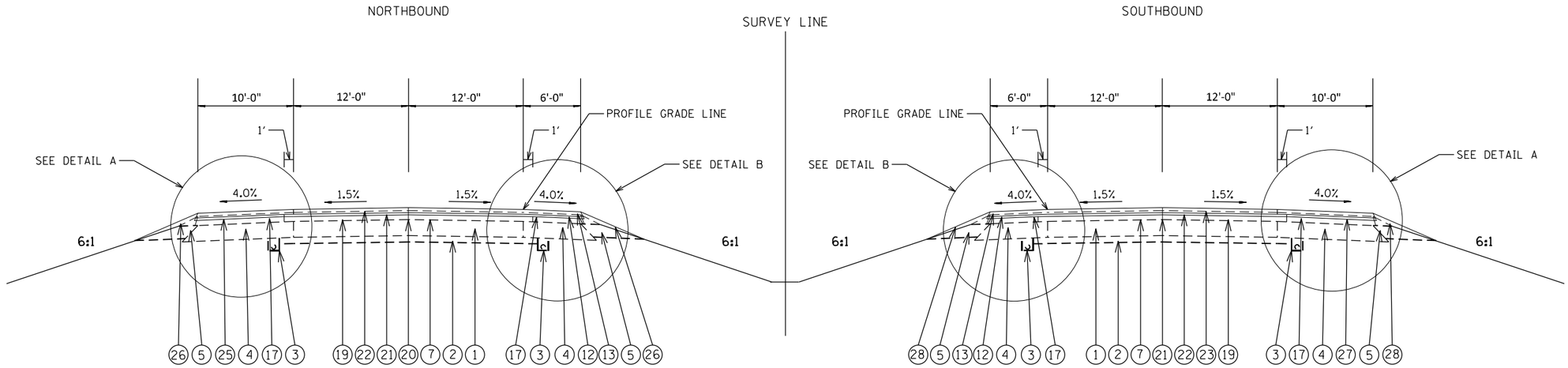

NORMAL TYPICAL SECTION
I-474

NOTE: INSIDE SHOULDERS FOR EMERGENCY CROSSOVERS INCREASES FROM 6' WIDE TO 10' WIDE
NORTHBOUND:
STA 129+89 TO 135+83
STA 331+32 TO 337+48
SOUTHBOUND:
STA 125+51 TO 131+53
STA 327+15 TO 333+33

NORTHBOUND AND SOUTHBOUND
STA 101+41.24 TO STA 186+92.01 (BK)
STA 186+90.89 (AH) TO STA 248+99.73(BK)
STA 282+88.12 TO STA 361+96.14
STA 374+19.80 TO STA 397+84.78
STA 412+41.62 TO STA 427+96.66
STA 449+28.44 (BK)/ STA 56+07.73 (AH) TO STA 62+60.97 (NORTHBOUND)
STA 449+28.44 (BK)/ STA 56+07.73 (AH) TO STA 62+80.50 (SOUTHBOUND)

LEGEND

EXISTING ITEMS
1. EXISTING 8" C.R.P.C.C. PAVEMENT
2. EXISTING 4" STABILIZED SUB-BASE
3. EXISTING 4" PIPE UNDERDRAIN
4. EXISTING BITUMINOUS SHOULDERS
5. EXISTING AGGREGATE SHOULDERS, TYPE B
6. EXISTING OVERLAY, 3 1/4"
7. EXISTING OVERLAY, 3 3/4"

PROPOSED ITEMS
16. HOT-MIX ASPHALT SURFACE REMOVAL, 3/4"
17. HOT-MIX ASPHALT SURFACE REMOVAL, 2"
18. HOT-MIX ASPHALT SURFACE REMOVAL, 3 1/2"
19. HOT-MIX ASPHALT SURFACE REMOVAL, 4"
20. POLYMERIZED HOT-MIX ASPHALT BINDER COURSE, IL-9.5, N70, 2"
21. POLYMERIZED HOT-MIX ASPHALT BINDER COURSE, SMA, 12.5, N80, 2"
22. POLYMERIZED HOT-MIX ASPHALT BINDER COURSE, IL-4.75, N50, 1"
23. POLYMERIZED HOT-MIX ASPHALT SURFACE COURSE, SMA, 12.5, MIX "E", N80, 2"
24. POLYMERIZED HOT-MIX ASPHALT SURFACE COURSE, IL-9.5, MIX "E", N70, 2"
25. HOT MIX ASPHALT SHOULDERS, 3"
26. HOT MIX ASPHALT SHOULDERS, 4'
27. HOT MIX ASPHALT SHOULDERS
28. AGGREGATE SHOULDERS, TYPE B

DETAIL A (OUTSIDE SHOULDER)

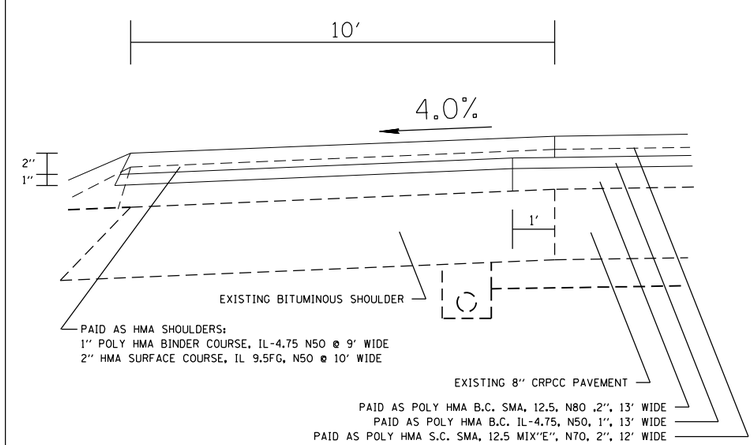

DETAIL B (INSIDE SHOULDER)

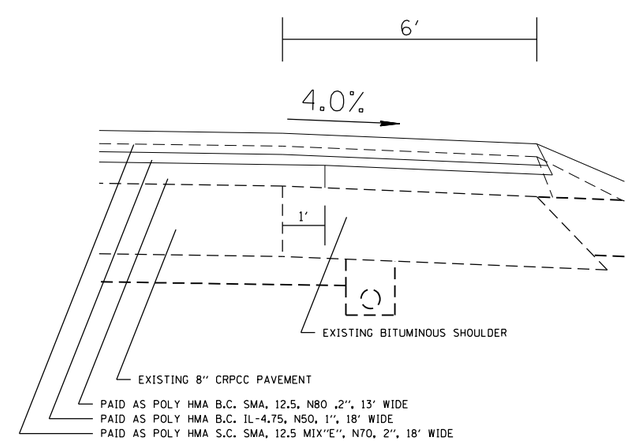

MODEL: $MODEL$NAME$
FILE NAME: $FILE$

USER NAME = $USER$	DESIGNED -	REVISED -	
	DRAWN -	REVISED -	
PLOT SCALE = $SCALE$	CHECKED -	REVISED -	
PLOT DATE = $DATE$	DATE -	REVISED -	

STATE OF ILLINOIS
DEPARTMENT OF TRANSPORTATION

PROPOSED & EXISITNG TYPICAL SECTIONS

SCALE: SHEET OF SHEETS STA. TO STA.

F.A.I. RTE.	SECTION	COUNTY	TOTAL SHEETS	SHEET NO.
474	72-(1)RS-3;(2,3,4)RS-2	PEORIA	240	41
		CONTRACT NO. 68C45		
	ILLINOIS	FED. AID PROJECT		

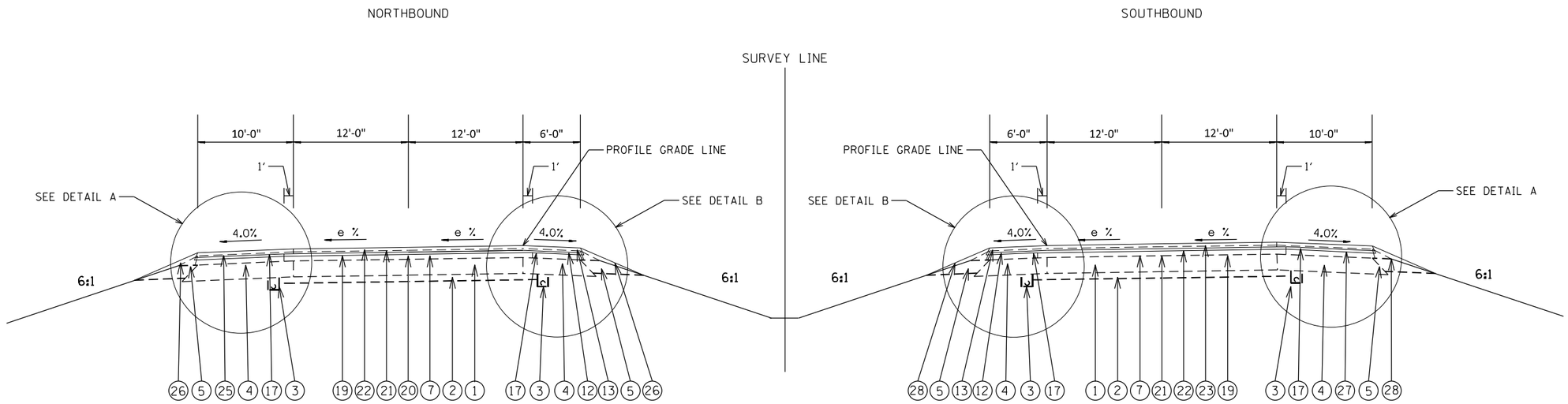

SUPERELEVATED TYPICAL SECTION
I-474

NOTE: INSIDE SHOULDERS FOR EMERGENCY CROSSOVERS
INCREASES FROM 6' WIDE TO 10' WIDE
NORTHBOUND:
STA 444+66 TO 449+28.44 (BK)
STA 56+07.73 (AH) TO 57+41
SOUTHBOUND:
STA 440+40 TO 446+23

NORTHBOUND AND SOUTHBOUND
STA 85+95.78 TO STA 101+41.24
STA 248+98.96 (AH) TO STA 282+88.12
STA 427+96.66 to STA 449+28.44 (BK)

NOTE: SEE SUPERTRANSITION TABLES FOR SUPERELEVATIONS
OF RAMP PAVEMENT AND SHOULDER SLOPES

LEGEND

EXISTING ITEMS
1. EXISTING 8" C.R.P.C.C. PAVEMENT
2. EXISTING 4" STABILIZED SUB-BASE
3. EXISTING 4" PIPE UNDERDRAIN
4. EXISTING BITUMINOUS SHOULDERS
5. EXISTING AGGREGATE SHOULDERS, TYPE B
6. EXISTING OVERLAY, 3 1/4"
7. EXISTING OVERLAY, 3 3/4"

PROPOSED ITEMS
16. HOT-MIX ASPHALT SURFACE REMOVAL, 3/4"
17. HOT-MIX ASPHALT SURFACE REMOVAL, 2"
18. HOT-MIX ASPHALT SURFACE REMOVAL, 3 1/2"
19. HOT-MIX ASPHALT SURFACE REMOVAL, 4"
20. POLYMERIZED HOT-MIX ASPHALT BINDER COURSE, IL-9.5, N70, 2"
21. POLYMERIZED HOT-MIX ASPHALT BINDER COURSE, SMA, 12.5, N80, 2"
22. POLYMERIZED HOT-MIX ASPHALT BINDER COURSE, IL-4.75, N50, 1"
23. POLYMERIZED HOT-MIX ASPHALT SURFACE COURSE, SMA, 12.5, MIX "E", N80, 2"
24. POLYMERIZED HOT-MIX ASPHALT SURFACE COURSE, IL-9.5, MIX "E", N70, 2"
25. HOT MIX ASPHALT SHOULDERS, 3"
26. HOT MIX ASPHALT SHOULDERS, 4'
27. HOT MIX ASPHALT SHOULDERS
28. AGGREGATE SHOULDERS, TYPE B

DETAIL A (OUTSIDE SHOULDER)

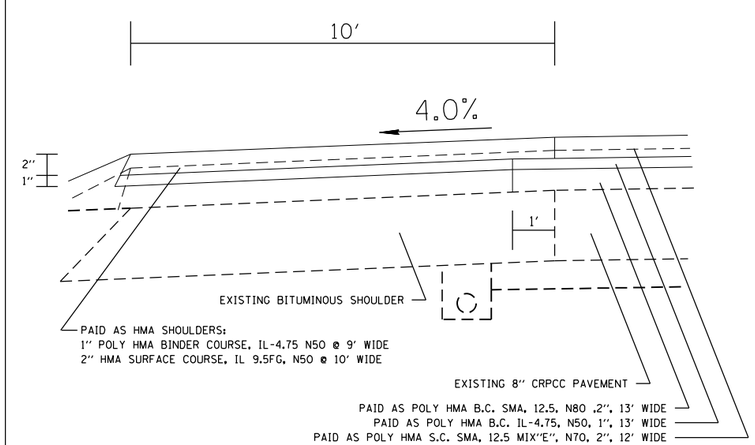

DETAIL B (INSIDE SHOULDER)

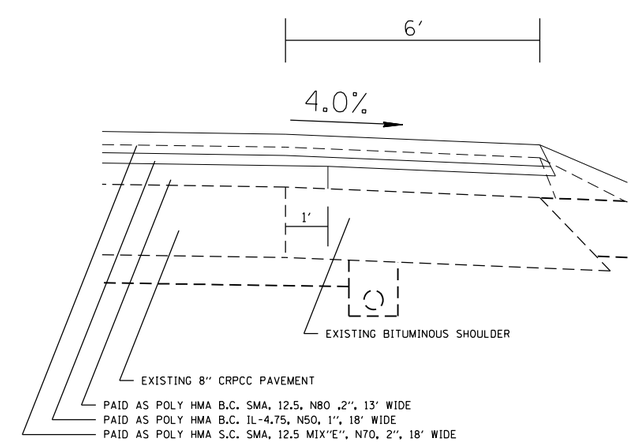

MODEL: $MODELNAME$
FILE NAME: $FILEL$

USER NAME = $USER$	DESIGNED -	REVISED -	
	DRAWN -	REVISED -	
PLOT SCALE = $SCALE$	CHECKED -	REVISED -	
PLOT DATE = $DATE$	DATE -	REVISED -	

STATE OF ILLINOIS
DEPARTMENT OF TRANSPORTATION

PROPOSED & EXISITNG TYPICAL SECTIONS

SCALE: | SHEET OF SHEETS | STA. TO STA.

F.A.I. RTE.	SECTION	COUNTY	TOTAL SHEETS	SHEET NO.
474	72-(1)RS-3;(2,3,4)RS-2	PEORIA	240	42
		CONTRACT NO. 68C45		
	ILLINOIS	FED. AID PROJECT		

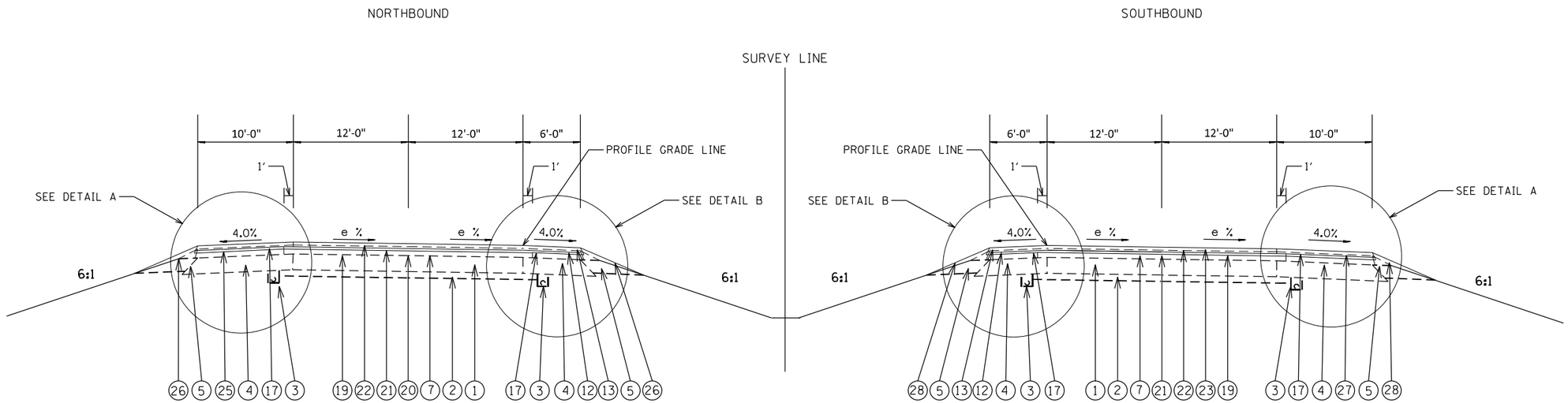

SUPERELEVATED TYPICAL SECTION
I-474

NORTHBOUND AND SOUTHBOUND
STA 361+96.14 TO STA 374+19.80
STA 397+84.78 TO STA 412+41.62

NOTE: SEE SUPERTRANSITION TABLES FOR SUPERELEVATIONS
OF RAMP PAVEMENT AND SHOULDER SLOPES

LEGEND

EXISTING ITEMS

1. EXISTING 8" C.R.P.C.C. PAVEMENT
2. EXISTING 4" STABILIZED SUB-BASE
3. EXISTING 4" PIPE UNDERDRAIN
4. EXISTING BITUMINOUS SHOULDERS
5. EXISTING AGGREGATE SHOULDERS, TYPE B
6. EXISTING OVERLAY, 3 1/4"
7. EXISTING OVERLAY, 3 3/4"

PROPOSED ITEMS

16. HOT-MIX ASPHALT SURFACE REMOVAL, 3/4"
17. HOT-MIX ASPHALT SURFACE REMOVAL, 2"
18. HOT-MIX ASPHALT SURFACE REMOVAL, 3 1/2"
19. HOT-MIX ASPHALT SURFACE REMOVAL, 4"
20. POLYMERIZED HOT-MIX ASPHALT BINDER COURSE, IL-9.5, N70, 2"
21. POLYMERIZED HOT-MIX ASPHALT BINDER COURSE, SMA, 12.5, N80, 2"
22. POLYMERIZED HOT-MIX ASPHALT BINDER COURSE, IL-4.75, N50, 1"
23. POLYMERIZED HOT-MIX ASPHALT SURFACE COURSE, SMA, 12.5, MIX "E", N80, 2"
24. POLYMERIZED HOT-MIX ASPHALT SURFACE COURSE, IL-9.5, MIX "E", N70, 2"
25. HOT MIX ASPHALT SHOULDERS, 3"
26. HOT MIX ASPHALT SHOULDERS, 4'
27. HOT MIX ASPHALT SHOULDERS
28. AGGREGATE SHOULDERS, TYPE B

DETAIL A (OUTSIDE SHOULDER)

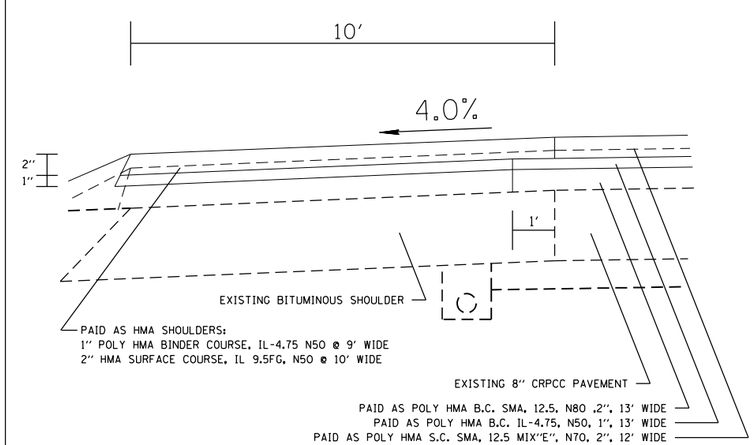

DETAIL B (INSIDE SHOULDER)

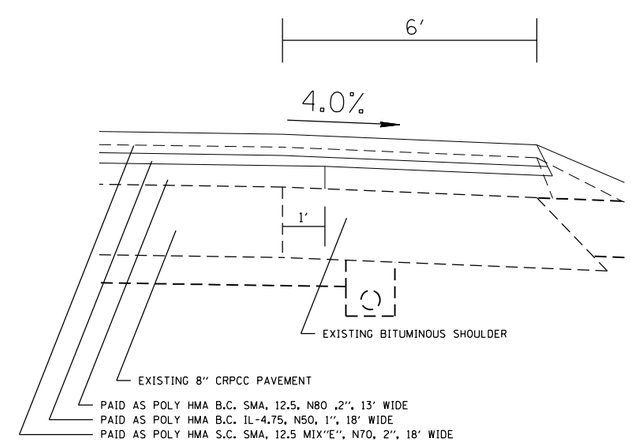

MODEL: $MODELNAME$
FILE NAME: $FILEL$

USER NAME = $USER$	DESIGNED -	REVISED -	
	DRAWN -	REVISED -	
PLOT SCALE = $SCALE$	CHECKED -	REVISED -	
PLOT DATE = $DATE$	DATE -	REVISED -	

STATE OF ILLINOIS
DEPARTMENT OF TRANSPORTATION

PROPOSED & EXISITNG TYPICAL SECTIONS

SCALE: | SHEET OF SHEETS | STA. TO STA.

F.A.I. RTE.	SECTION	COUNTY	TOTAL SHEETS	SHEET NO.
474	72-(1)RS-3;(2,3,4)RS-2	PEORIA	240	43
		CONTRACT NO. 68C45		
	ILLINOIS	FED. AID PROJECT		

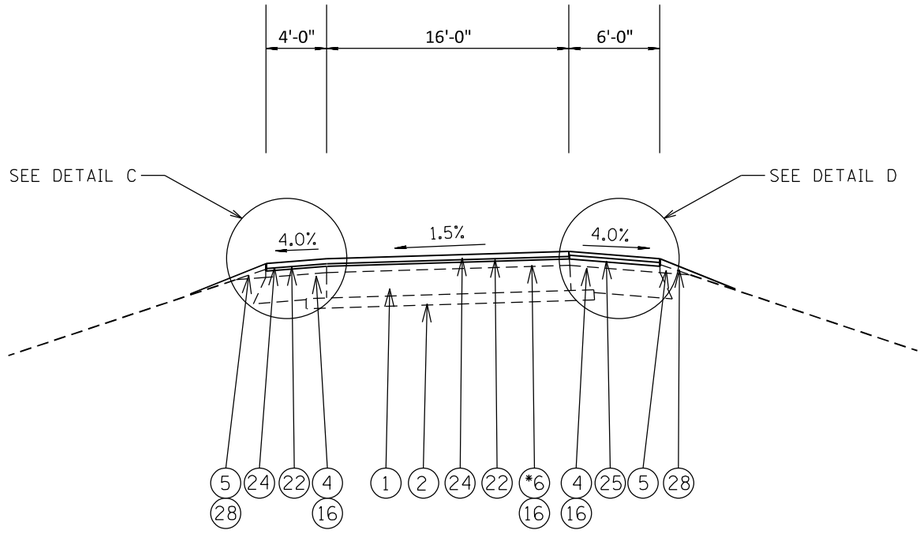

NORMAL RAMP TYPICAL SECTION
MAXWELL INTERCHANGE

RAMP A: STA 0+00 TO STA 35+35.47
RAMP E: STA 0+00 TO STA 36+02.96
RAMP D: STA 0+00 TO STA 13+54.42
RAMP G: STA 0+00 TO STA 14+33.79

* - RAMPS A AND E EXISTING OVERLAY IS 4 3/4''
NOTE: SEE SUPERTRANSITION TABLES FOR SUPER ELEVATIONS OF RAMP PAVEMENT AND SHOULDER SLOPES.

DETAIL C (INSIDE SHOULDER)

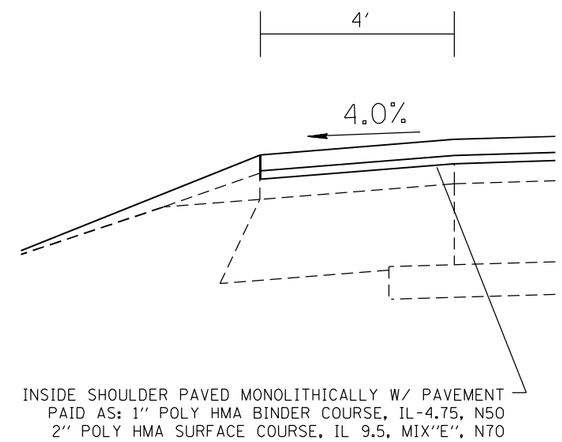

LEGEND

EXISTING ITEMS

1. EXISTING 8'' C.R.P.C.C. PAVEMENT
2. EXISTING 4'' STABILIZED SUB-BASE
3. EXISTING 4'' PIPE UNDERDRAIN
4. EXISTING BITUMINOUS SHOULDERS
5. EXISTING AGGREGATE SHOULDERS, TYPE B
6. EXISTING OVERLAY, 3 1/4''
7. EXISTING OVERLAY, 3 3/4''

PROPOSED ITEMS

16. HOT-MIX ASPHALT SURFACE REMOVAL, 3/4''
17. HOT-MIX ASPHALT SURFACE REMOVAL, 2''
18. HOT-MIX ASPHALT SURFACE REMOVAL, 3 1/2''
19. HOT-MIX ASPHALT SURFACE REMOVAL, 4''
20. POLYMERIZED HOT-MIX ASPHALT BINDER COURSE, IL-9.5, N70, 2''
21. POLYMERIZED HOT-MIX ASPHALT BINDER COURSE, SMA, 12.5, N80, 2''
22. POLYMERIZED HOT-MIX ASPHALT BINDER COURSE, IL-4.75, N50, 1''
23. POLYMERIZED HOT-MIX ASPHALT SURFACE COURSE, SMA, 12.5, MIX ''E'', N80, 2''
24. POLYMERIZED HOT-MIX ASPHALT SURFACE COURSE, IL-9.5, MIX ''E'', N70, 2''
25. HOT MIX ASPHALT SHOULDERS, 3''
26. HOT MIX ASPHALT SHOULDERS, 4'
27. HOT MIX ASPHALT SHOULDERS
28. AGGREGATE SHOULDERS, TYPE B

DETAIL D (OUTSIDE SHOULDER)

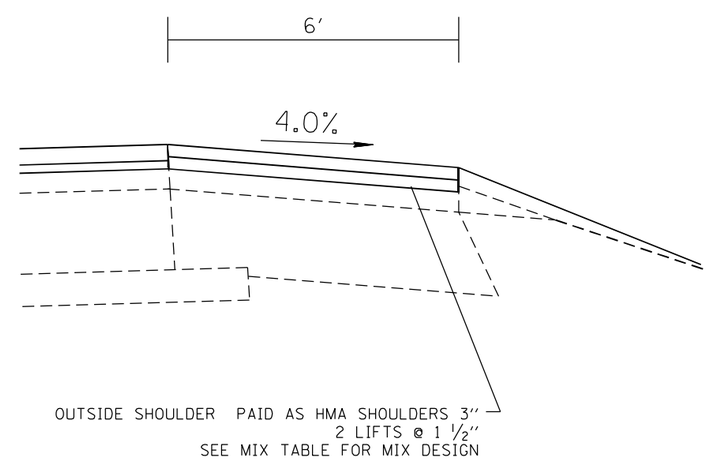

MODEL: $MODELNAME$
FILE NAME: $FILEL$

USER NAME = $USER$	DESIGNED -	REVISED -
	DRAWN -	REVISED -
PLOT SCALE = $SCALE$	CHECKED -	REVISED -
PLOT DATE = $DATE$	DATE -	REVISED -

STATE OF ILLINOIS
DEPARTMENT OF TRANSPORTATION

PROPOSED & EXISITNG TYPICAL SECTIONS

SCALE: | SHEET OF SHEETS | STA. TO STA.

F.A.I. RTE.	SECTION	COUNTY	TOTAL SHEETS	SHEET NO.
474	72-(1)RS-3;(2,3,4)RS-2	PEORIA	240	44
		CONTRACT NO. 68C45		
		ILLINOIS	FED. AID PROJECT	

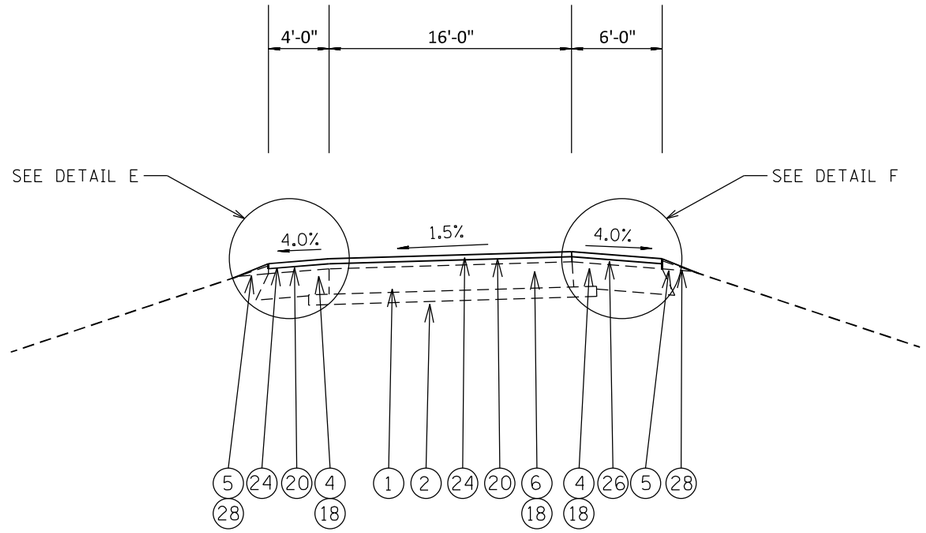

NORMAL RAMP TYPICAL SECTION
AIRPORT/ US 24 INTERCHANGES

RAMP A: STA 0+00 TO STA 30+69.16
RAMP B: STA 0+00 TO STA 21+00.00
RAMP C: STA 0+00 TO STA 27+64.67
RAMP D: STA 0+00 TO STA 24+97.45
RAMP E: STA 0+00 TO STA 26+67.48
RAMP F: STA 0+00 TO STA 23+93.47

NOTE: SEE SUPERTRANSITION TABLES FOR SUPERELEVATIONS OF RAMP PAVEMENT AND SHOULDER SLOPES

LEGEND

EXISTING ITEMS

1. EXISTING 8" C.R.P.C.C. PAVEMENT
2. EXISTING 4" STABILIZED SUB-BASE
3. EXISTING 4" PIPE UNDERDRAIN
4. EXISTING BITUMINOUS SHOULDERS
5. EXISTING AGGREGATE SHOULDERS, TYPE B
6. EXISTING OVERLAY, 3 1/4"
7. EXISTING OVERLAY, 3 3/4"

PROPOSED ITEMS

16. HOT-MIX ASPHALT SURFACE REMOVAL, 3/4"
17. HOT-MIX ASPHALT SURFACE REMOVAL, 2"
18. HOT-MIX ASPHALT SURFACE REMOVAL, 3 1/2"
19. HOT-MIX ASPHALT SURFACE REMOVAL, 4"
20. POLYMERIZED HOT-MIX ASPHALT BINDER COURSE, IL-9.5, N70, 2"
21. POLYMERIZED HOT-MIX ASPHALT BINDER COURSE, SMA, 12.5, N80, 2"
22. POLYMERIZED HOT-MIX ASPHALT BINDER COURSE, IL-4.75, N50, 1"
23. POLYMERIZED HOT-MIX ASPHALT SURFACE COURSE, SMA, 12.5, MIX "E", N80, 2"
24. POLYMERIZED HOT-MIX ASPHALT SURFACE COURSE, IL-9.5, MIX "E", N70, 2"
25. HOT MIX ASPHALT SHOULDERS, 3"
26. HOT MIX ASPHALT SHOULDERS, 4'
27. HOT MIX ASPHALT SHOULDERS
28. AGGREGATE SHOULDERS, TYPE B

DETAIL E (INSIDE SHOULDER)

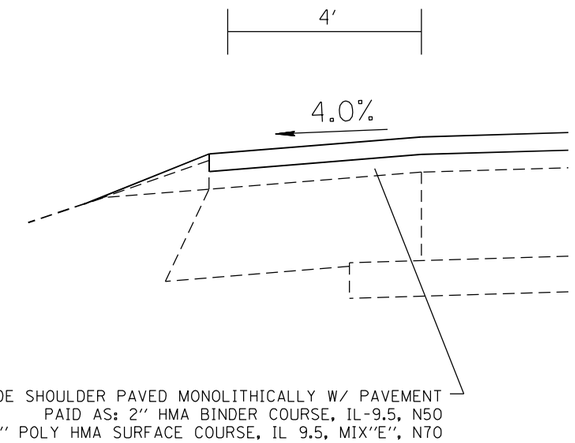

DETAIL F (OUTSIDE SHOULDER)

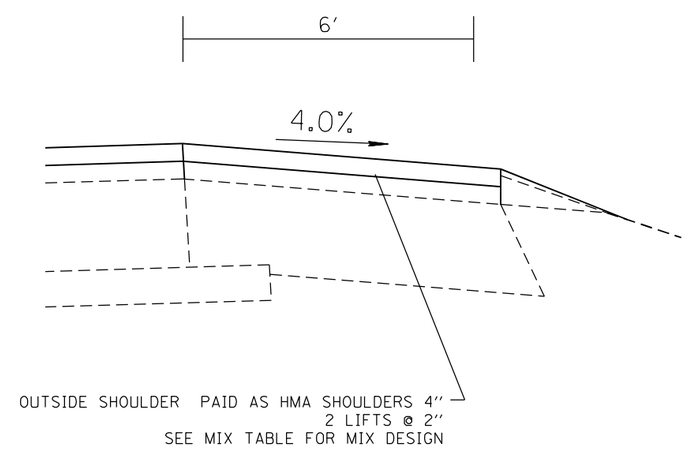

MODEL: $MODEL$NAME$
FILE NAME: $FILEL$

USER NAME = $USER$	DESIGNED -	REVISED -	
	DRAWN -	REVISED -	
PLOT SCALE = $SCALE$	CHECKED -	REVISED -	
PLOT DATE = $DATE$	DATE -	REVISED -	

STATE OF ILLINOIS
DEPARTMENT OF TRANSPORTATION

PROPOSED & EXISITNG TYPICAL SECTIONS

SCALE: | SHEET OF SHEETS | STA. TO STA.

F.A.I. RTE.	SECTION	COUNTY	TOTAL SHEETS	SHEET NO.
474	72-(1)RS-3;(2,3,4)RS-2	PEORIA	240	45
		CONTRACT NO. 68C45		
	ILLINOIS	FED. AID PROJECT		

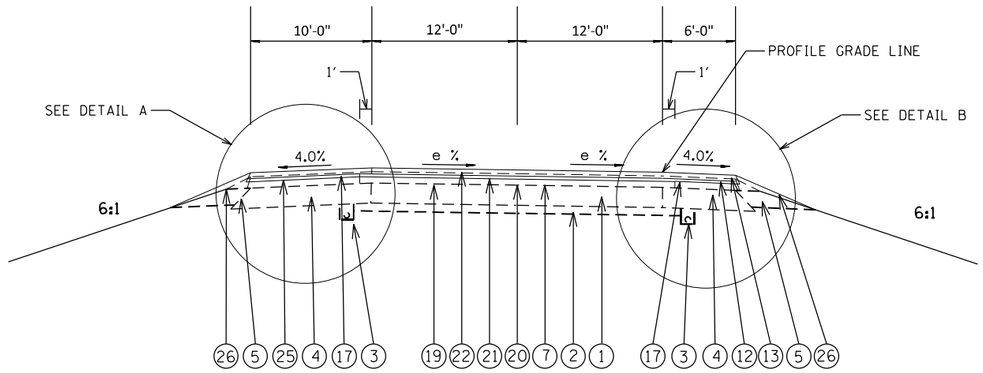

SUPERELEVATED TYPICAL SECTION
ROADWAY A

NORTHBOUND AND SOUTHBOUND
STA 85+95.78 TO STA 101+41.24
STA 248+98.96 (AH) TO STA 282+88.12
STA 427+96.66 to STA 449+28.44 (BK)

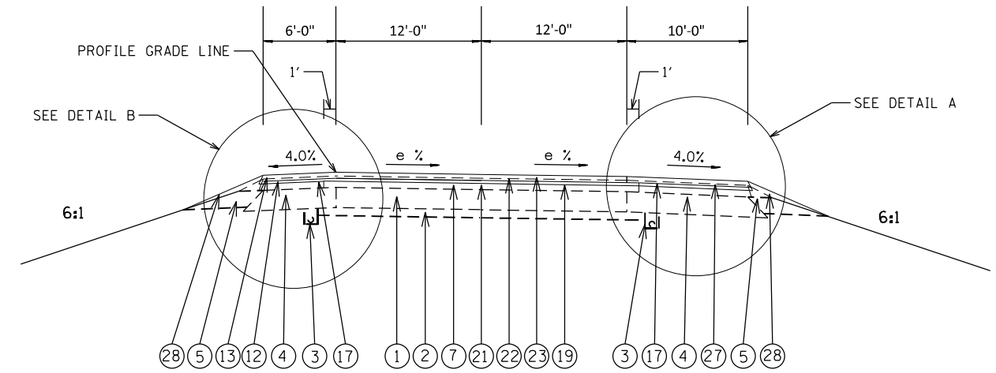

SUPERELEVATED TYPICAL SECTION
ROADWAY B

NORTHBOUND AND SOUTHBOUND
STA 85+95.78 TO STA 101+41.24
STA 248+98.96 (AH) TO STA 282+88.12
STA 427+96.66 to STA 449+28.44 (BK)

NOTES:
1. EXISTING OVERLAY FOR ROADWAYS A & B IS 6''
2. SEE SUPERTRANSITION TABLES FOR SUPERELEVATIONS OF ROADWAY PAVEMENT AND SHOULDER SLOPES
3. SEE PLAN SHEET FOR GORE AREA TREATMENT BETWEEN ROADWAY AND I-474 PAVEMENT

LEGEND

EXISTING ITEMS
1. EXISTING 8'' C.R.P.C.C. PAVEMENT
2. EXISTING 4'' STABILIZED SUB-BASE
3. EXISTING 4'' PIPE UNDERDRAIN
4. EXISTING BITUMINOUS SHOULDERS
5. EXISTING AGGREGATE SHOULDERS, TYPE B
6. EXISTING OVERLAY, 3 1/4''
7. EXISTING OVERLAY, 3 3/4''

PROPOSED ITEMS
16. HOT-MIX ASPHALT SURFACE REMOVAL, 3/4''
17. HOT-MIX ASPHALT SURFACE REMOVAL, 2''
18. HOT-MIX ASPHALT SURFACE REMOVAL, 3 1/2''
19. HOT-MIX ASPHALT SURFACE REMOVAL, 4''
20. POLYMERIZED HOT-MIX ASPHALT BINDER COURSE, IL-9.5, N70, 2''
21. POLYMERIZED HOT-MIX ASPHALT BINDER COURSE, SMA, 12.5, N80, 2''
22. POLYMERIZED HOT-MIX ASPHALT BINDER COURSE, IL-4.75, N50, 1''
23. POLYMERIZED HOT-MIX ASPHALT SURFACE COURSE, SMA, 12.5, MIX ''E'', N80, 2''
24. POLYMERIZED HOT-MIX ASPHALT SURFACE COURSE, IL-9.5, MIX ''E'', N70, 2''
25. HOT MIX ASPHALT SHOULDERS, 3''
26. HOT MIX ASPHALT SHOULDERS, 4'
27. HOT MIX ASPHALT SHOULDERS
28. AGGREGATE SHOULDERS, TYPE B

DETAIL A (OUTSIDE SHOULDER)

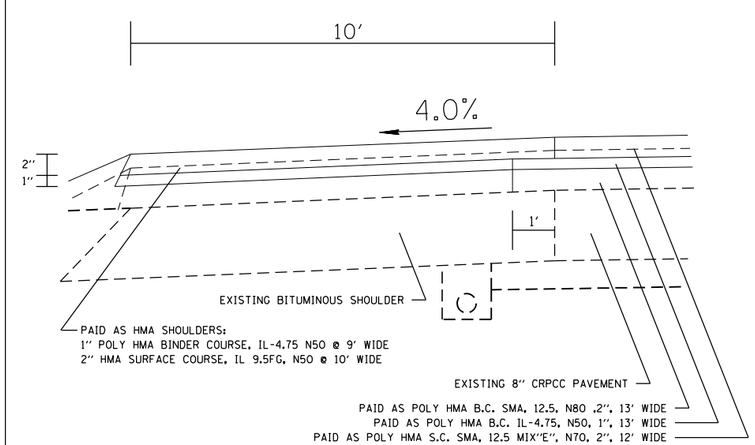

DETAIL B (INSIDE SHOULDER)

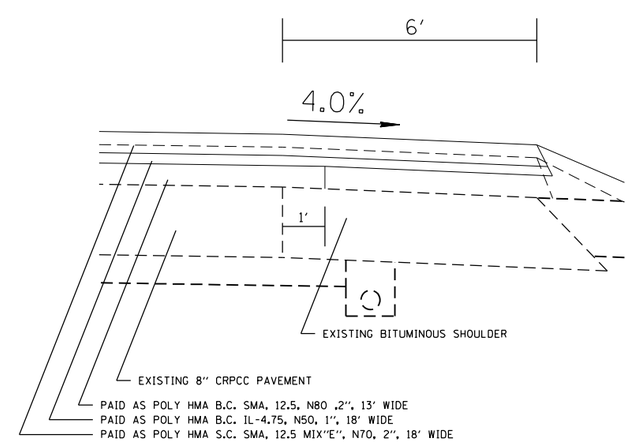

MODEL: $MODELNAME$
FILE NAME: $FILEL$

USER NAME = $USER$	DESIGNED -	REVISED -	
	DRAWN -	REVISED -	
PLOT SCALE = $SCALE$	CHECKED -	REVISED -	
PLOT DATE = $DATE$	DATE -	REVISED -	

STATE OF ILLINOIS
DEPARTMENT OF TRANSPORTATION

PROPOSED & EXISITNG TYPICAL SECTIONS

SCALE: | SHEET OF SHEETS | STA. TO STA.

F.A.I. RTE.	SECTION	COUNTY	TOTAL SHEETS	SHEET NO.
474	72-(1)RS-3;(2,3,4)RS-2	PEORIA	240	46
		CONTRACT NO. 68C45		
		ILLINOIS	FED. AID PROJECT	

I 474 HORIZONTAL CURVATURE DATA				
	NB I474	SB I474	ROADWAY A	ROADWAY B
P.I. STA.	418+57.59	525+20.75	149+61.28	73+76.3
RADIUS	22,918.31	3,819.72	2,864.79	3572.01
LENGTH (FEET)	841.22	601.78	2250.00	753.97
SUPER ELEVATION (e)	1.50%	5.30%	6.00%	5.70%
SUPER ELEVATION TRANSITION	N/A	520+59.23 TO 522+99.23(0% - 5.3%)/ 527+41.01 (SB I474) TO 56+98.70 (SL I474)	159+44.65 TO 161+84.65 (2.08% TO 6.0%)	N/A
P.C. STA.	414+36.93	522+19.24	137+74.65	77+51.88
P.T. STA.	422+87.15	528+21.02	160+24.65	87+88.26
DESIGN SPEED	70	70	70	70

I 474 HORIZONTAL CURVATURE DATA					
	CURVE 1	CURVE 2	CURVE 3	CURVE 4	CURVE 5
P.I. STA.	93+77.82	26.14.22	368+11.16	405+14.18	438+65.72
RADIUS	4,092.56	3,819.72	4911.07	11459.16	11308
LENGTH (FEET)	1545.45	3389.16	1223.66	1456.84	2131.78
SUPER ELEVATION (e)	5.20%	5.30%	3.80%	2.00%	2.00%
SUPER ELEVATION TRANSITION	STA 83+88.96 TO 86+76.96 / STA 100+60.06 TO 103+48.06	STA 246+89.56 TO 249+81.79 / STA 282+05.29 TO 284+98.29	STA 360+62.81 TO 362+62.81 / STA 373+60.40 TO 375+84.40	STA 396+54.45 TO 398+51.45 / STA 411+74.95 TO 413+74.95	STA 426+63.33 TO 428+63.33 / STA 448+61.77 TO 57+41.06
P.C. STA.	85+95.78	248+99.73 (BK) / 248+98.96 (AH)	361+96.14	397+84.78	427+96.66
P.T. STA.	101+41.24	282+88.12	374+19.80	412+41.62	449+28.44 (BK) / 56+07.73 (AH)
DESIGN SPEED	70	70	70	70	70

MAXWELL SPUR	RAMP A			RAMP D			RAMP E			RAMP G		
	CURVE 1	CURVE 2	CURVE 3	CURVE 1	CURVE 2	CURVE 3	CURVE 1	CURVE 2	CURVE 3	CURVE 1	CURVE 2	CURVE 3
P.I. STA.	9+60.43	16+24.42	20+57.62	0+98.2	-	12+30.51	10+07.77	15+91.13	21+35.64	0+98.8	-	12+97.43
RADIUS	760	284	465	760	229.96	465	760	340	465	760	250.01	465
LENGTH (FEET)	368.06	95	515.82	196.51	907.9	246.27	648.34	142.66	483.61	196.49	955.64	281.66
SUPER ELEVATION (e)	8.00%	5.36%	8.00%	8.00%	8.00%	8.00%	8.00%	8.00%	8.00%	8.00%	8.00%	8.00%
S.E. TRANS	SEE S.E. TRANSITION TABLE	SEE S.E. TRANSITION TABLE	SEE S.E. TRANSITION TABLE	SEE S.E. TRANSITION TABLE	SEE S.E. TRANSITION TABLE	SEE S.E. TRANSITION TABLE	SEE S.E. TRANSITION TABLE	SEE S.E. TRANSITION TABLE	SEE S.E. TRANSITION TABLE	SEE S.E. TRANSITION TABLE	SEE S.E. TRANSITION TABLE	SEE S.E. TRANSITION TABLE
P.C. STA.	6+62.4	15+76.47	17+69.54	0+00	1+96.51	11+04.41	6+62.4	15+18.74	18+69.39	0+00	1+96.49	11+52.13
P.T. STA.	12+30.46	16+71.47	22+85.36	1+96.51	11+04.41	13+50.68	13+10.74	16+61.39	23+53.01	1+96.49	11+52.13	14+33.79

AIRPORT ROAD INTERCHANGE	RAMP A		RAMP B		RAMP C			RAMP D			
	CURVE 1	CURVE 2	CURVE 1	CURVE 2	CURVE 1	CURVE 2	CURVE 3	CURVE 1	CURVE 2	CURVE 3	CURVE 4
P.I. STA.	9+86.61	16+57.92	10+14.86	20+04.99	11+94.32	11+47.42	22+02.89	7+62.98	10+09057	13+06.17	18+89
RADIUS	760	390	600	760	240	465	3024.58	760	560	310	465
LENGTH (FEET)	612.9	273.46	725.95	784.2	606.52	202.89	588.24	200	287.83	288.96	714.97
SUPER ELEVATION (e)	8.00%	8.00%	8.00%	8.00%	8.00%	8.00%	2.00%	8.00%	8.00%	8.00%	8.00%
S.E. TRANS	SEE S.E. TRANSITION TABLE	SEE S.E. TRANSITION TABLE	SEE S.E. TRANSITION TABLE	SEE S.E. TRANSITION TABLE	SEE S.E. TRANSITION TABLE	SEE S.E. TRANSITION TABLE	SEE S.E. TRANSITION TABLE	SEE S.E. TRANSITION TABLE	SEE S.E. TRANSITION TABLE	SEE S.E. TRANSITION TABLE	SEE S.E. TRANSITION TABLE
P.C. STA.	6+62.4	15+15.3	6+00	15+73.95	4+37.81	10+44.33	19+07.84	6+62.4	8+62.4	11+50.23	14+39.2
P.T. STA.	12+75.3	17+88.76	13+25.95	23+58.15	10+44.33	12+47.23	24+96.08	8+62.4	11+50.23	14+39.2	21+54.17

US 24 INTERCHANGE	RAMP A		RAMP B			RAMP C			RAMP D		RAMP E				RAMP F			
	CURVE 1	CURVE 2	CURVE 1	CURVE 2	CURVE 3	CURVE 1	CURVE 2	CURVE 3	CURVE 1	CURVE 2	CURVE 1	CURVE 2	CURVE 3	CURVE 4	CURVE 1	CURVE 2	CURVE 3	CURVE 4
P.I. STA.	9+30.82	17+47.66	7+97.86	10+42.73	14+73.21	5+25.26	14+44.30	26+81.66	10+57.14	17+52.41	1+50	13+13.83	13+38.72	15+18.10	7+62.98	9+43.6	16+88.66	23+07.84
RADIUS	336	760	764	475	880	477	760	11398.84	760	336	150	250	380	760	760	380	250	150
LENGTH (FEET)	349.32	571.16	268.13	220.35	617.95	335.42	569.02	166.02	728.15	249.58	235.62	604.58	160	200	200	160	605.91	235.62
SUPER ELEVATION (e)	8.00%	8.00%	8.00%	8.00%	8.00%	8.00%	8.00%	8.00%	8.00%	8.00%	8.00%	8.00%	8.00%	8.00%	8.00%	8.00%	8.00%	8.00%
S.E. TRANS	SEE S.E. TRANSITION TABLE	SEE S.E. TRANSITION TABLE	SEE S.E. TRANSITION TABLE	SEE S.E. TRANSITION TABLE	SEE S.E. TRANSITION TABLE	SEE S.E. TRANSITION TABLE	SEE S.E. TRANSITION TABLE	SEE S.E. TRANSITION TABLE	SEE S.E. TRANSITION TABLE	SEE S.E. TRANSITION TABLE	SEE S.E. TRANSITION TABLE	SEE S.E. TRANSITION TABLE	SEE S.E. TRANSITION TABLE	SEE S.E. TRANSITION TABLE	SEE S.E. TRANSITION TABLE	SEE S.E. TRANSITION TABLE	SEE S.E. TRANSITION TABLE	SEE S.E. TRANSITION TABLE
P.C. STA.	7+38.52	14+47.84	6+62.4	9+30.53	11+50.88	3+50.28	11+45.71	25+98.65	6+62.4	16+21.55	0+00	6+52.95	12+57.52	14+17.52	6+62.4	8+62.4	10+22.4	21+57.84
P.T. STA.	10+87.84	20+19	9+30.53	11+50.88	17+68.83	6+85.7	17+14.73	27+64.67	13+90.55	18+71.13	2+35.62	12+57.52	14+17.52	16+17.52	8+62.4	10+22.4	16+28.31	23+93.46

MODEL: $MODEL$NAME$
FILE NAME: $FILEL$

USER NAME = $USER$	DESIGNED -	REVISED -	
	DRAWN -	REVISED -	
PLOT SCALE = $SCALE$	CHECKED -	REVISED -	
PLOT DATE = $DATE$	DATE -	REVISED -	

STATE OF ILLINOIS
DEPARTMENT OF TRANSPORTATION

HORIZONTAL CURVE DATA

SCALE: SHEET OF SHEETS STA. TO STA.

F.A.I. RTE.	SECTION	COUNTY	TOTAL SHEETS	SHEET NO.
474	72[1RS-3:(2-4)RS-2]	PEORIA	240	49
		CONTRACT NO. 68C45		
	ILLINOIS	FED. AID PROJECT		

RAMP/CURVE NO.	SUPER TRANSITION ATTAINED	RATE	SUPER TRANSITION REMOVED
MAXWELL SPUR			
RAMP A: CURVE 1	STA 4+82.4 TO 6+62.4 (2% - 8%)	8%	STA11+78.46 TO 13+04.04 (8% - 1.5%)
RAMP A: CURVE 2	STA 14+99.41 TO 16+23.97 (1.5% - 5.36%)	5.36%	STA 16+23.97 TO 17+20.51 (5.36% - FLAT)
RAMP A: CURVE 3	STA 17+20.51 TO 18+76.51 (FLAT TO 8%)	8%	STA 22+25.36 TO 24+05.36 (8% - 2%)
RAMP D: CURVE 1	STA 0+76.51 TO 2+56.51 (2% - 8%)	8%	-
RAMP D: CURVE 2	FULL LENGTH OF CURVE IN FULL SUPERELEVATION		
RAMP D: CURVE 3	-	8%	STA 13+00.68 TO 14+50.68 (8% -2%)
RAMP E: CURVE 1	STA 4+82.4 TO 6+62.4 (2% - 8%)	8%	STA 12+58.74 TO 14+14.74 (8% - FLAT)
RAMP E: CURVE 2	STA 14+14.74 TO 15+70.74 (FLAT TO 8%)	8%	STA 16+09.39 TO 17+65.39 (8% - FLAT)
RAMP E: CURVE 3	STA 17+65.39 TO 19+21.39 (FLAT - 8%)	8%	STA 22+93.01 TO 24+73.01 (8% - 2%)
RAMP G: CURVE 1	STA 0+76.49 TO 2+56.49 (2% - 8%)	8%	-
RAMP G: CURVE 2	FULL LENGTH OF CURVE IN FULL SUPERELEVATION		
RAMP G: CURVE 3	-	8%	STA 13+73.79 TO 15+53.79 (8% - 2%)
AIRPORT ROAD INTERCHANGE			
RAMP A: CURVE 1	STA 4+82.4 TO 6+62.4 (2% - 8%)	8%	STA 12+11.3 TO 14+03.3 (8% - FLAT)
RAMP A: CURVE 2	STA 14+03.3 TO 15+71.3 (FLAT - 8%)	8%	STA 17+32.76 TO 19+00.76 (8% - 1.5%)
RAMP B: CURVE 1	STA 4+80 TO 6+60 (1.5% - 8%)	8%	STA 12+65.95 to 14+45.95 (8% - FLAT)
RAMP B: CURVE 2	STA 14+45.95 TO 16+37.95 (FLAT - 8%)	8%	STA 22+98.15 TO 24+78.15 (8% - 2%)
RAMP C: CURVE 1	STA 3+17.81 TO 4+97.81 (1.5% - 8%)	8%	-
RAMP C: CURVE 2	-	8%	STA 11+87.23 TO 13+67.23 (8% - 2%)
RAMP C: CURVE 3	FULL LENGTH OF CURVE AT 2%		
RAMP D: CURVE 1	STA 4+82.4 TO 6+62.4 (2% - 8%)	8%	-
RAMP D: CURVE 2	FULL LENGTH OF CURVE IN FULL SUPERELEVATION		
RAMP D: CURVE 3	FULL LENGTH OF CURVE IN FULL SUPERELEVATION		
RAMP D: CURVE 4	-	8%	STA 20+94.17 TO 22+74.17 (8% - 1.5%)
US 24 INTERCHANGE			
RAMP A: CURVE 1	STA 6+18.52 TO 7+98.52 (1.5% - 8%)	8%	STA 10+35.84 TO 12+73.84 (8% - FLAT)
RAMP A: CURVE 2	STA 12+73.84 TO 15+11.84 (FLAT - 8%)	8%	STA 19+59 TO 21+39 (8% - 2%)
RAMP B: CURVE 1	STA 4+82.4 TO 6+62.4 (2% - 8%)	8%	-
RAMP B: CURVE 2	FULL LENGTH OF CURVE IN FULL SUPERELEVATION		
RAMP B: CURVE 3	-	8%	STA 17+08.83 TO 18+88.83 (8% - 2%)
RAMP C: CURVE 1	STA 2+50.28 TO 4+00.28 (2% - 8%)	8%	STA 6+38.7 TO 7+79.7 (8% - 1.5%)
RAMP C: CURVE 2A	STA10+41.71 TO 11+97.71 (1.5% - 8%)	8%	-
RAMP C: CURVE 2B	STA 15+94.73 TO 17+14.73 (8%-6%)	6%	STA 17+14.73 TO 18+34.73 (6% - 2%)
RAMP C: CURVE 3	FULL LENGTH OF CURVE AT 2%		
RAMP D: CURVE 1	STA 4+82.4 TO 6+62.4 (2% - 8%)	8%	STA 13+26.55 TO 15+00.05 (8% - FLAT)
RAMP D: CURVE 2	STA 15+00.05 TO 16+73.55 (FLAT - 8%)	8%	STA 18+11.13 TO 19+91.13 (8% - 1.5%)
RAMP E: CURVE 1	NOT GIVEN	8%	STA 1+95.62 TO 3+15.62 (8% - 1.5%)
RAMP E: CURVE 2	STA 5+72.95 TO 6+92.95 (1.5% - 8%)	8%	-
RAMP E: CURVE 3	FULL LENGTH OF CURVE IN FULL SUPERELEVATION		
RAMP E: CURVE 4	-	8%	STA 15+57.52 TO 17+37.52 (8% - 2%)
RAMP F: CURVE 1	STA 4+82.4 TO 6+62.4 (2% - 8%)	8%	-
RAMP F: CURVE 2	FULL LENGTH OF CURVE IN FULL SUPERELEVATION		
RAMP F: CURVE 3	-	8%	STA 15+88.31 TO 17+08.31 (8% - 1.5%)
RAMP F: CURVE 4	STA 20+77.84 TO 21+97.84 (1.5% - 8%)	8%	-

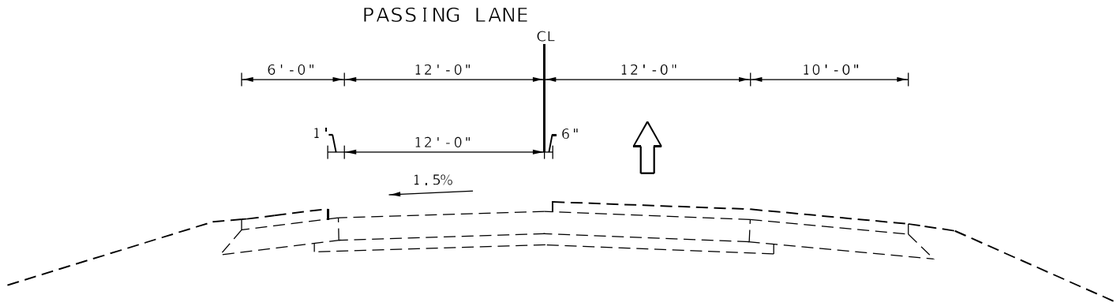

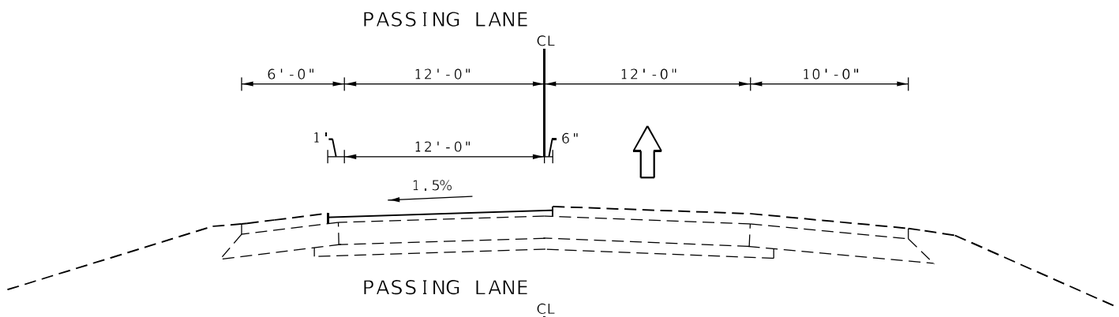

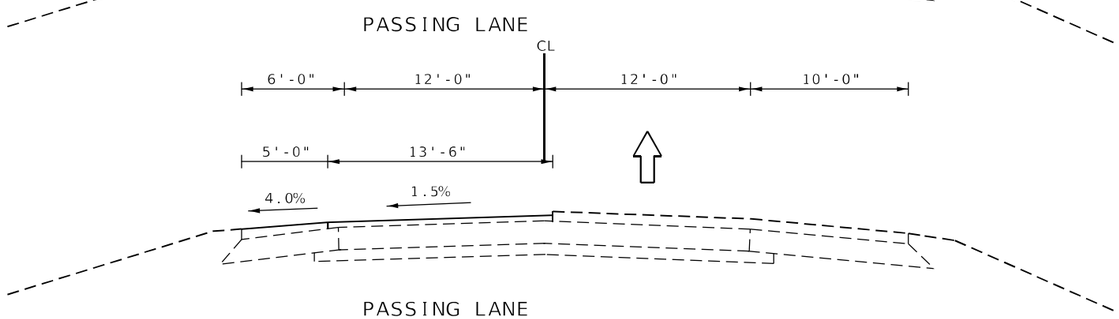

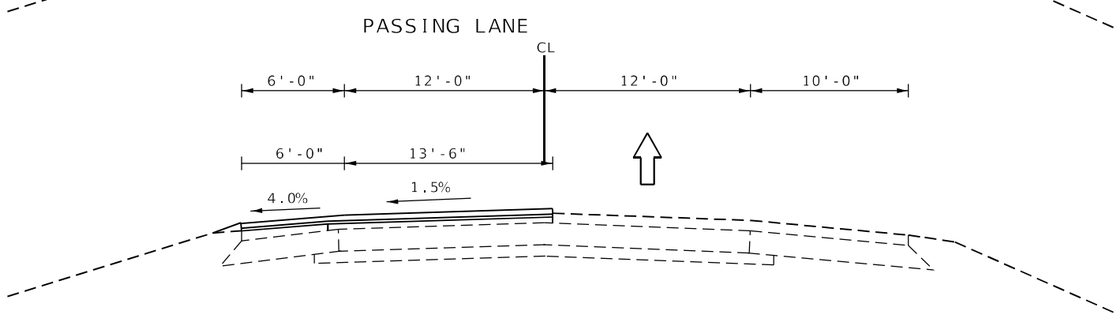

STAGE I

PURPOSE
Complete the milling, patching, and resurfacing of Passing Lane and Inside Shoulder. Complete the resurfacing of the median crossovers and place aggregate shoulders. The median pier protection, guardrail installations, structural repairs,and drainage improvements may be completed within the median during this stage.

CONSTRUCTION
Mill 4" on Passing Lane extending 6" past centerline and 1' into the inside shoulder.

Perform Class A Patching on the Passing Lane

Place 2" SMA Binder Course on Passing Lane extending 6" past centerline and 1' onto inside shoulder. Total width of 13.5'.

Mill 2" on inside shoulder from final elevation of previously placed SMA Binder Course. Actual Milling depth may vary but paid as HMA Surf. Rem 2".

Place 1" Leveling Binder and 2" SMA Surface Course on Passing Lane and Inside Shoulder monolithically extending 6" past centerline. Total width = 18.5'.

Place aggregate shoulders.

MODEL: $MODELNAME$
FILE NAME: $FILEL$

USER NAME = $USER$	DESIGNED -	REVISED -	
	DRAWN -	REVISED -	
PLOT SCALE = $SCALE$	CHECKED -	REVISED -	
PLOT DATE = $DATE$	DATE -	REVISED -	

STATE OF ILLINOIS
DEPARTMENT OF TRANSPORTATION

Mainline Sequence – 2 Lanes

SCALE: | SHEET OF SHEETS | STA. TO STA.

F.A.I. RTE.	SECTION	COUNTY	TOTAL SHEETS	SHEET NO.
474	72-(1)RS-3;(2,3,4)RS-2	PEORIA	240	51
		CONTRACT NO. 68C45		
	ILLINOIS	FED. AID PROJECT		

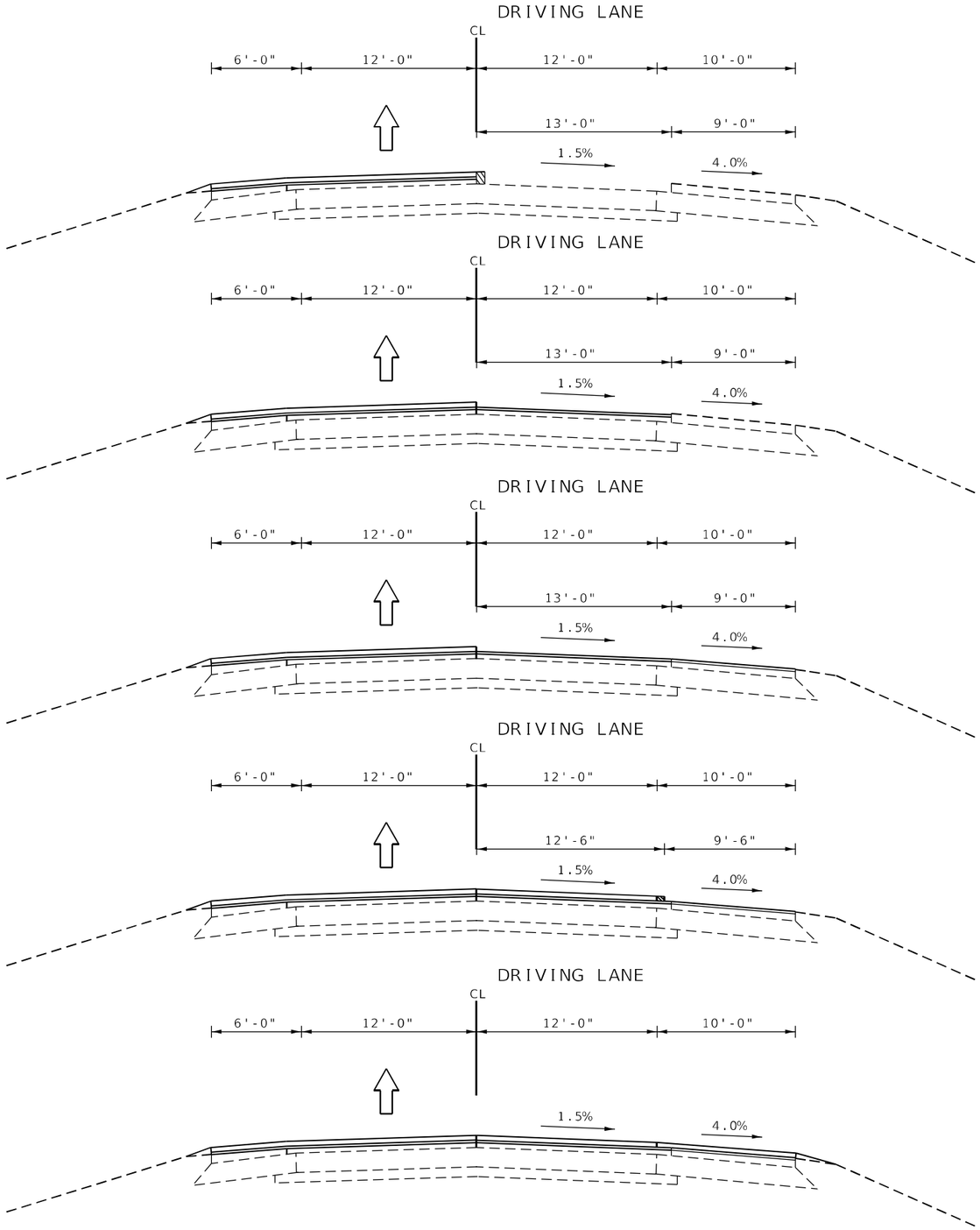

STAGE II

PURPOSE
Complete the milling, patching, and resurfacing of Driving Lane and Outside Shoulder. The guardrail installations, structural repairs,and drainage improvements may be completed on the outside during this stage. Place aggregate shoulders on the outside shoulders.

CONSTRUCTION
Mill 4" on Driving Lane extending 1' onto the Outside Shoulder. Total width = 13'. Note: Milling includes the 6" that was placed over centerline the previous stage.

Perform Class A Patching on the Driving Lane.

Place 2" SMA Binder Course and 1" Leveling Binder Course on Driving Lane extending 1' onto the outside shoulder. Total width of 13'.

Mill 2" on Outside Shoulder from final elevation of previously placed Leveling
Binder Course. Actual Milling depth may vary but paid as HMA Surf. Rem 2". Total width = 9'.

Place 1" Leveling Binder on Outside Shoulder at 9' wide.

Place 2" SMA Surface Course extending 6" over Outside Shoulder joint.

Joint Trim Outside Shoulder joint.

Place 2" HMA Surface Course on Outside Shoulder.

Place aggregate shoulders.

MODEL: $MODELNAME$
FILE NAME: $FILEL$

USER NAME = $USER$	DESIGNED -	REVISED -	
	DRAWN -	REVISED -	
PLOT SCALE = $SCALE$	CHECKED -	REVISED -	
PLOT DATE = $DATE$	DATE -	REVISED -	

STATE OF ILLINOIS
DEPARTMENT OF TRANSPORTATION

Mainline Sequence – 2 Lane

SCALE: SHEET OF SHEETS STA. TO STA.

F.A.I. RTE.	SECTION	COUNTY	TOTAL SHEETS	SHEET NO.
474	72-(1)RS-3;(2,3,4)RS-2	PEORIA	240	52
		CONTRACT NO. 68C45		
	ILLINOIS	FED. AID PROJECT		

NEW SEQUENCE

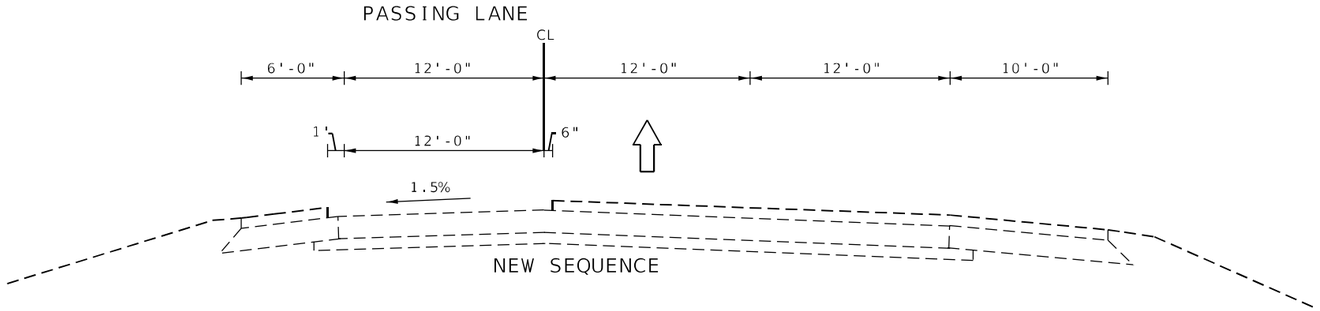

NEW SEQUENCE

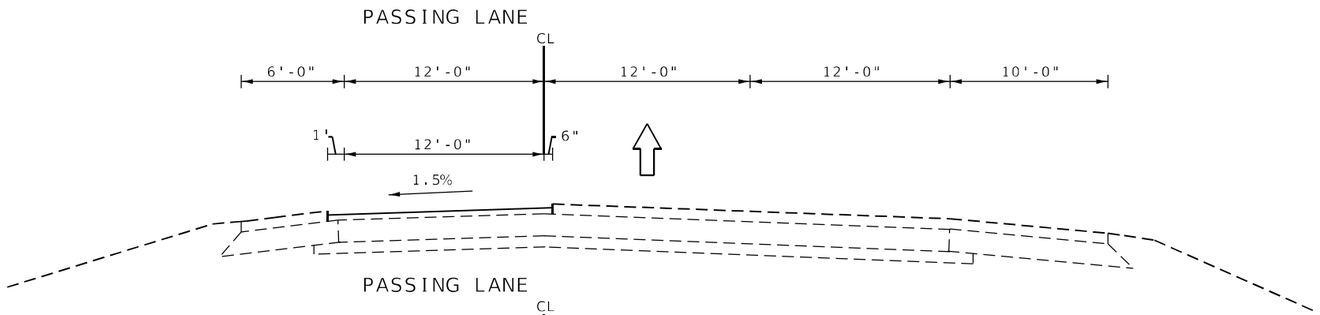

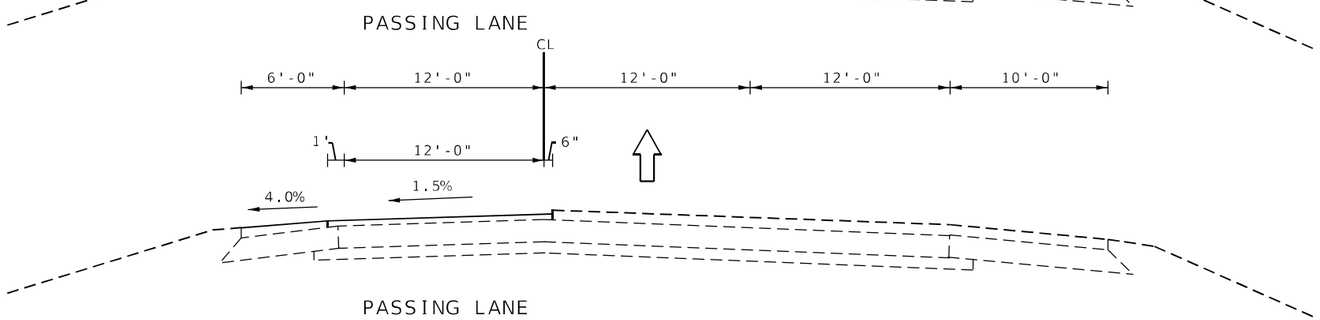

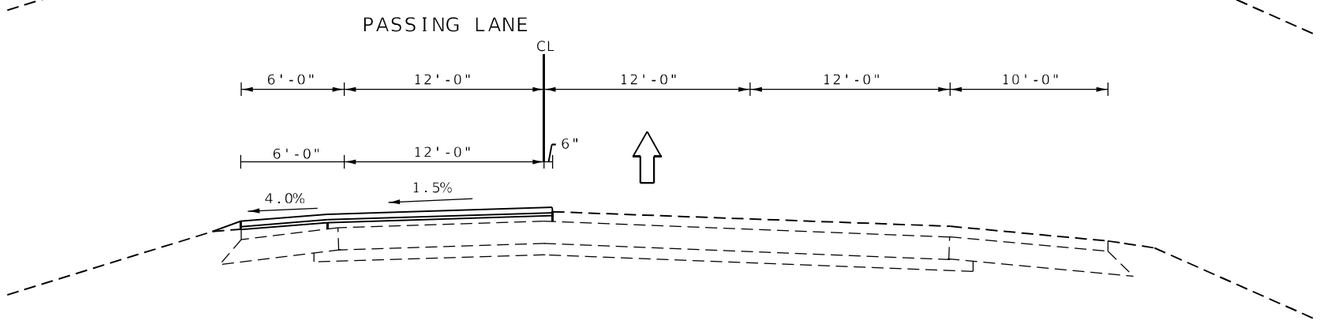

STAGE I

PURPOSE
Complete the milling, patching, and resurfacing of Passing Lane and Inside Shoulder. Complete the resurfacing of the median crossovers and place aggregate shoulders. The median pier protection, guardrail installations, structural repairs,and drainage improvementsmay be completed within the median during this stage.

CONSTRUCTION
Mill 4" on Passing Lane extending 6" past centerline and 1' into the inside shoulder

Perform Class A Patching on the Passing Lane

Place 2" SMA Binder Course on Passing Lane extending 6" past centerline and 1' onto inside shoulder. Total width of 13.5'.

Mill 2" on inside shoulder from final elevation of previously placed SMA Binder Course. Actual Milling depth may vary but paid as HMA Surf. Rem 2".

Place 1" Leveling Binder and 2" SMA Surface Course on Passing Lane and Inside Shoulder monolithically extending 6" past centerline. Total width = 18.5'.

Place aggregate shoulders.

MODEL: $MODELNAME$
FILE NAME: $FILE$

USER NAME = $USER$	DESIGNED -	REVISED -	STATE OF ILLINOIS DEPARTMENT OF TRANSPORTATION
	DRAWN -	REVISED -	
PLOT SCALE = $SCALE$	CHECKED -	REVISED -	
PLOT DATE = $DATE$	DATE -	REVISED -	

Mainline Sequence – 3 Lane

SCALE: SHEET OF SHEETS STA. TO STA.

F.A.I. RTE.	SECTION	COUNTY	TOTAL SHEETS	SHEET NO.
474	72-(1)RS-3;(2,3,4)RS-2	PEORIA	240	53
		CONTRACT NO. 68C45		
		ILLINOIS FED. AID PROJECT		

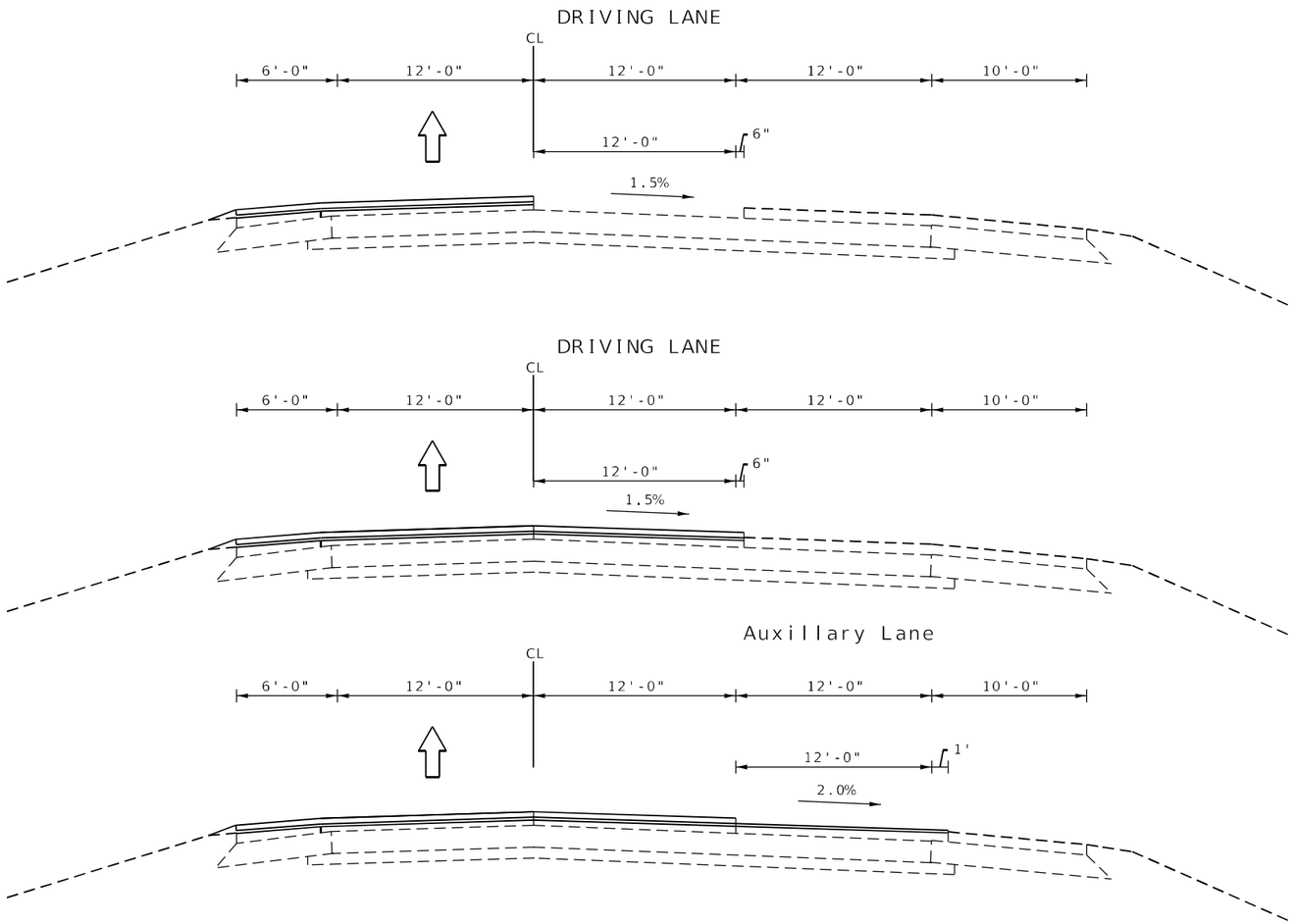

STAGE II

PURPOSE
Complete the milling, patching, and resurfacing of Driving Lane, Auxillary Lane, and Outside Shoulder. The guardrail installations, structural repairs,and drainage improvements may be completed on the outside during this stage. Place aggregate shoulders on the outside shoulders.

CONSTRUCTION
Mill 4" on Driving Lane extending 6" onto the Auxillary Lane. Total width = 12.5'. this milling includes the 6" previously placed over the Passing Lane and Driving Lane joint.
Note: Milling width transitions from 13' to 12.5' wide at beginning of Auxillary Lane transition for Northbound and milling width transitions from 12.5' to 13' wide at the end of the Auxillary Lane transition for Southbound.

Perform Class A Patching on the Driving Lane.

Place 2" SMA Binder Course, 1" Leveling Binder Course, and 2" SMA Surface Course on Driving Lane extending 6" onto the Auxillary Lane. Total width = 12.5'.

Mill 4" on Auxillary Lane extending 1' onto the Outside Shoulder. Total width = 13'. Note: milliong includes the 6" previously placed over the Driving Lane and Auxillary Lane joint,

Perform Class A Patching on Auxillary Lane.

Place 2" SMA Binder Course and 1" Leveling Binder Course on the Auxillary Lane extending 1' onto the Outside Shoulder. Total width of = 13'.

Mill 2" on Outside Shoulder from final elevation of previously placed Leveling Binder Course. Actual milling depth may vary but paid as HMA Surf. Rem 2".

Place 1" Leveling Binder on Outside Shoulder at 9' wide.

Place 2" SMA Surface Course extending 6" over Outside Shoulder joint.

Joint Trim Outside Shoulder joint.

Place 2" HMA Surface Course on Outside Shoulder.

Place aggregate shoulders.

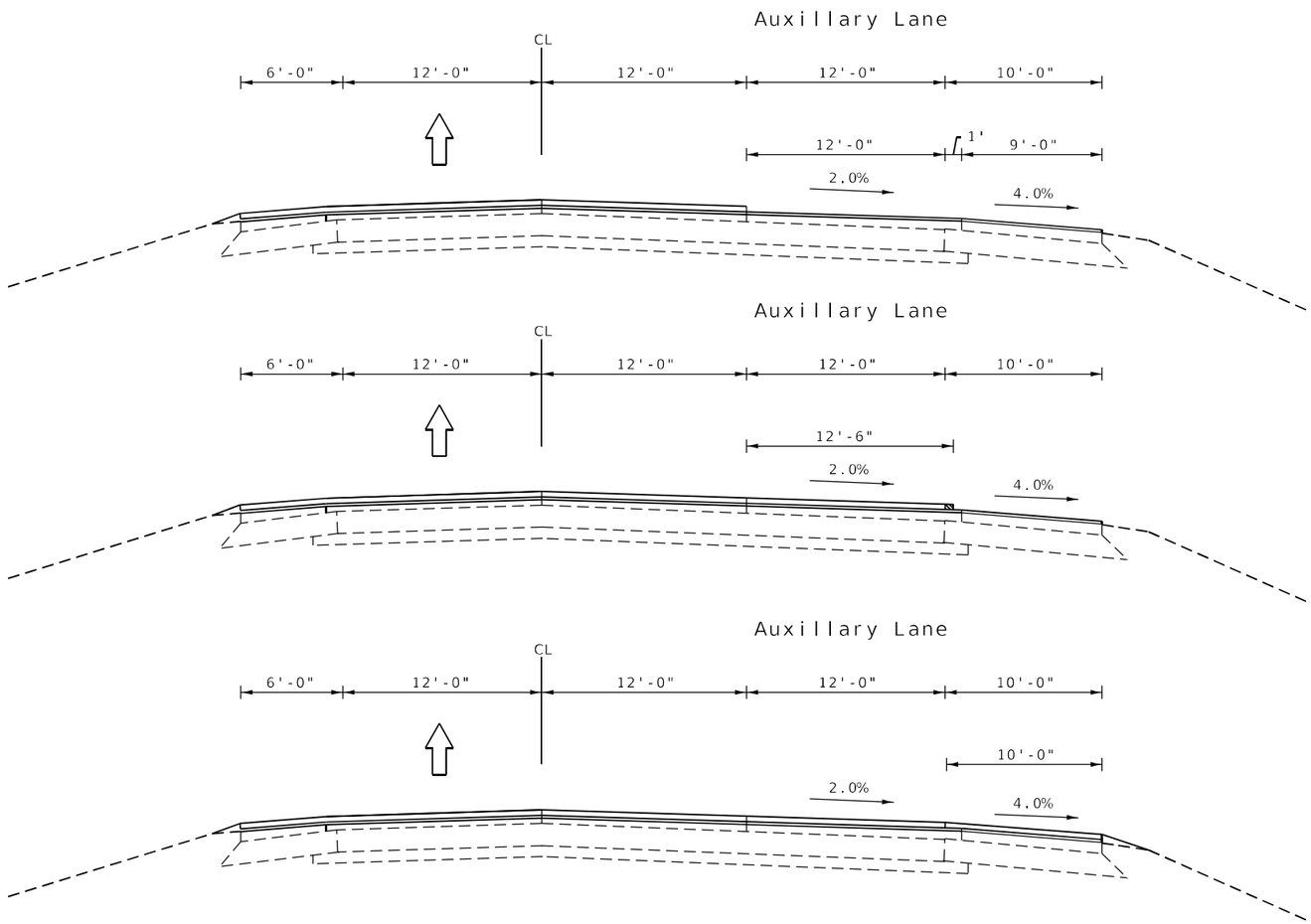

STAGE II

PURPOSE
Complete the milling, patching, and resurfacing of Driving Lane, Auxillary Lane, and Outside Shoulder. The guardrail installations, structural repairs,and drainage improvements may be completed on the outside during this stage. Place aggregate shoulders on the outside shoulders.

CONSTRUCTION
Mill 4" on Driving Lane extending 6" onto the Auxillary Lane. Total width = 12.5'. this milling includes the 6" previously placed over the Passing Lane and Driving Lane joint.
Note: Milling width transitions from 13' to 12.5' wide at beginning of Auxillary Lane transition for Northbound and milling width transitions from 12.5' to 13' wide at the end of the Auxillary Lane transition for Southbound.

Perform Class A Patching on the Driving Lane.

Place 2" SMA Binder Course, 1" Leveling Binder Course, and 2" SMA Surface Course on Driving Lane extending 6" onto the Auxillary Lane. Total width = 12.5'.

Mill 4" on Auxillary Lane extending 1' onto the Outside Shoulder. Total width = 13'. Note: milliong includes the 6" previously placed over the Driving Lane and Auxillary Lane joint,

Perform Class A Patching on Auxillary Lane.

Place 2" SMA Binder Course and 1" Leveling Binder Course on the Auxillary Lane extending 1' onto the Outside Shoulder. Total width of = 13'.

Mill 2" on Outside Shoulder from final elevation of previously placed Leveling Binder Course. Actual milling depth may vary but paid as HMA Surf. Rem 2".

Place 1" Leveling Binder on Outside Shoulder at 9' wide.

Place 2" SMA Surface Course extending 6" over Outside Shoulder joint.

Joint Trim Outside Shoulder joint.

Place 2" HMA Surface Course on Outside Shoulder.

Place aggregate shoulders.

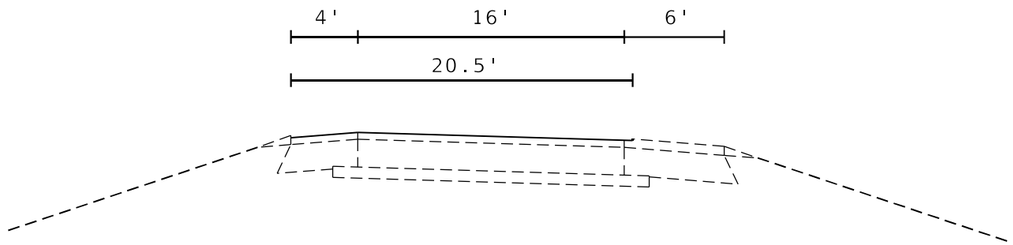

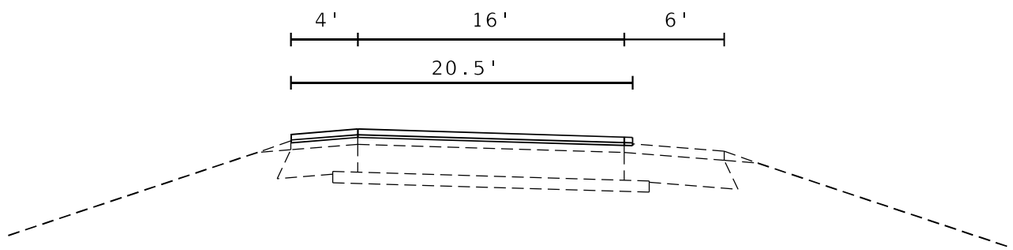

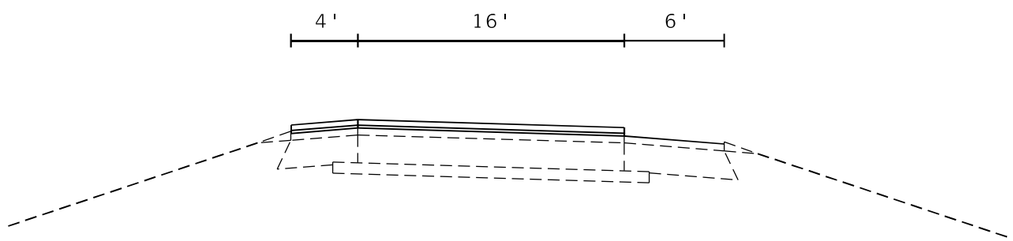

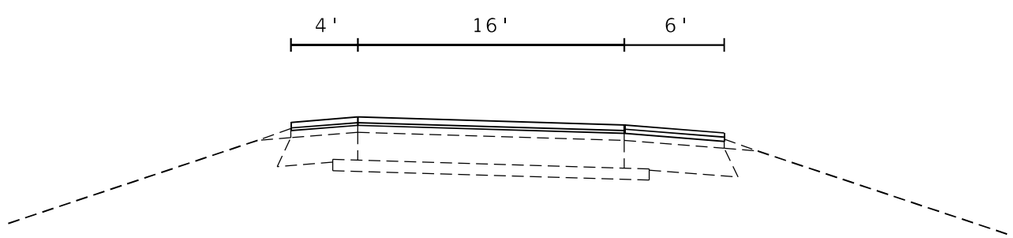

CONSTRUCTION ON RAMPS (VARIOUS STAGES)

Mill 3/4" on ramp pavement and inside shoulder extending 6" past the outside shoulder joint. Total milling width is 20.5'.

Perform Class B Patching on pavement.

Place 1" Poly HMA Binder Course, IL 4.75 N50 on ramp pavement and inside shoulder extending 6" past outside shoulder joint. Total width of 20.5'.

Place 2" Poly HMA Surface Course IL 9.5 N70 Mix "E" on ramp pavement and inside shoulder extending 6" past outside shoulder joint. Total width of 20.5'.

Mill 3/4" on outside shoulder. Total width is 6'.

Place HMA Shoulders 3" on outside shoulder.

Place aggregate shoulders.

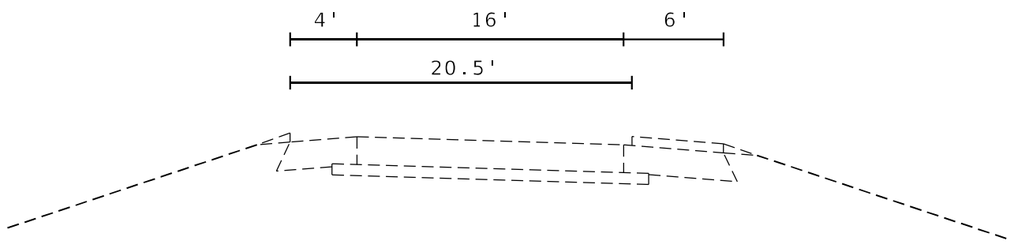

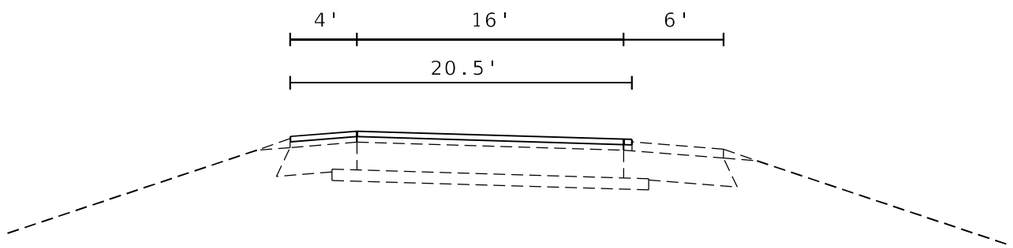

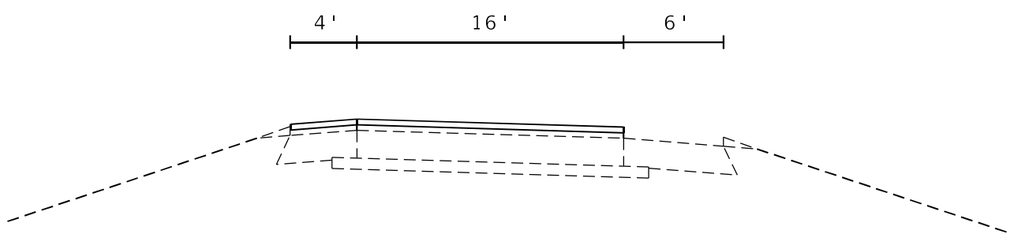

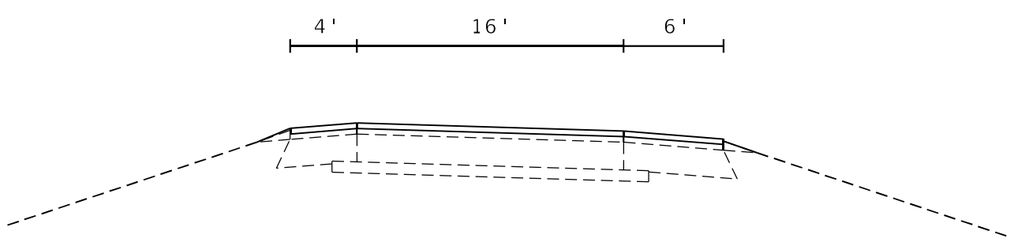

CONSTRUCTION ON RAMPS (VARIOUS STAGES)

Mill 3.5" on ramp pavement and inside shoulder extending 6" past the outside shoulder joint. Total milling width is 20.5'.

Perform Class B Patching on pavement.

Place 2" Poly HMA Binder Course, IL 9.5 N70 on ramp pavement and inside shoulder extending 6" past outside shoulder joint. Total width of 20.5'.

Place 2" Poly HMA Surface Course IL 9.5 N70 Mix "E" on ramp pavement and inside shoulder extending 6" past outside shoulder joint. Total width of 20.5'.

Mill 3.5" on outside shoulder. Total width is 6'.

Place HMA Shoulders 4" on outside shoulder.

Place aggregate shoulders.

MODEL: $MODEL$NAME$
FILE NAME: $FILE$

USER NAME = $USER$	DESIGNED -	REVISED -	
	DRAWN -	REVISED -	
PLOT SCALE = $SCALE$	CHECKED -	REVISED -	
PLOT DATE = $DATE$	DATE -	REVISED -	

STATE OF ILLINOIS
DEPARTMENT OF TRANSPORTATION

Airport/US 24 Interchange Ramps

SCALE: | SHEET OF SHEETS | STA. TO STA.

F.A.I. RTE.	SECTION	COUNTY	TOTAL SHEETS	SHEET NO.
474	72-(1)RS-3;(2,3,4)RS-2	PEORIA	240	57
		CONTRACT NO. 68C45		
	ILLINOIS	FED. AID PROJECT		

WB MAXWELL CONNECTOR RAMP CLOSURE/DETOUR

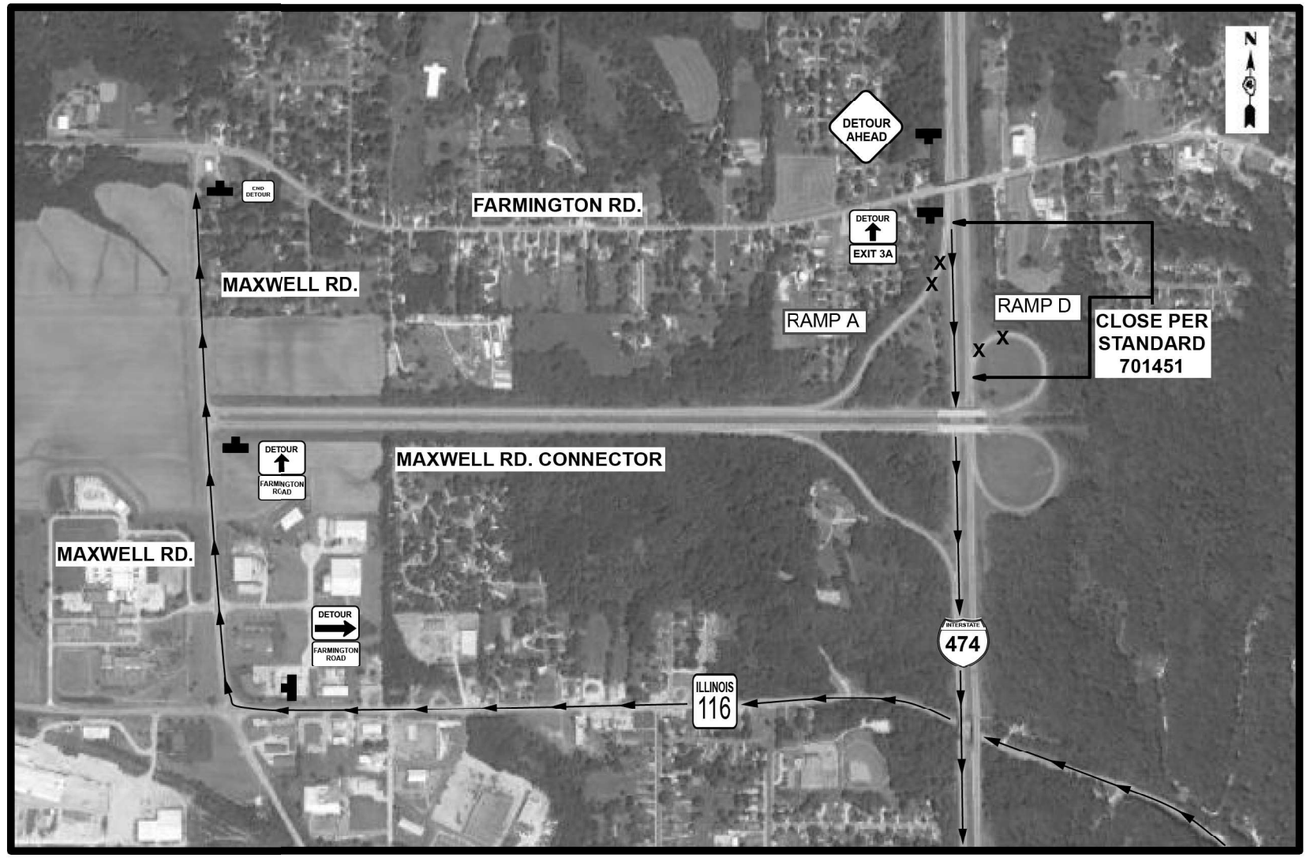

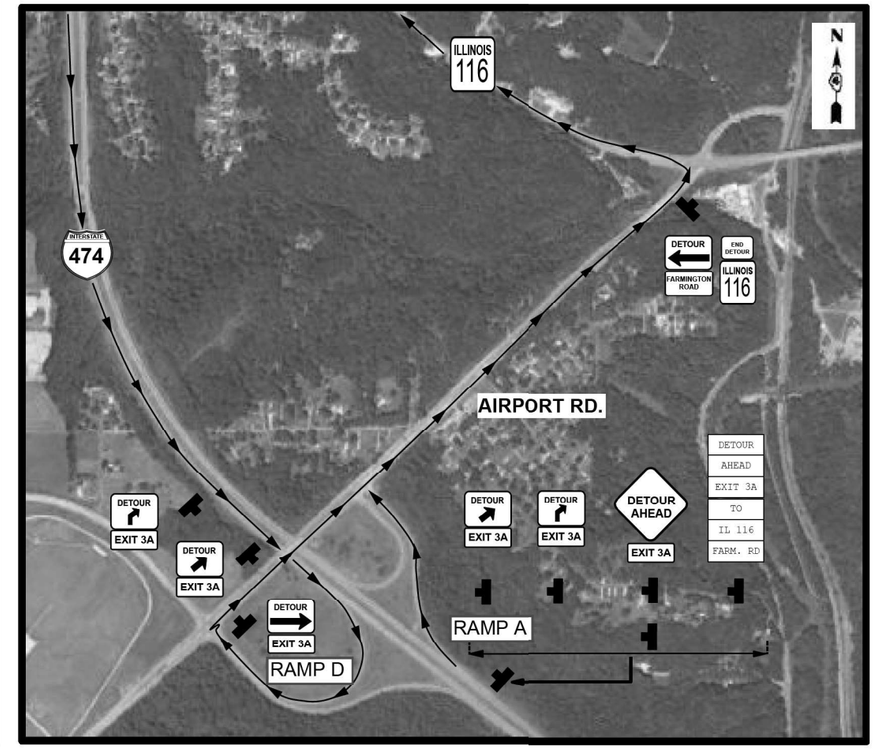

SEE WORKING RESTRICTIONS & TRAFFIC CONTROL / STAGING NOTES FOR SEQUENCING OF RAMP CLOSURES.

MODEL: $MODEL$NAME$
FILE NAME: $FILEL$

USER NAME = $USER$	DESIGNED -	REVISED -	STATE OF ILLINOIS DEPARTMENT OF TRANSPORTATION
	DRAWN -	REVISED -	
PLOT SCALE = $SCALE$	CHECKED -	REVISED -	
PLOT DATE = $DATE$	DATE -	REVISED -	

MAXWELL INTERCHANGE DETOURS
RAMPS A & D

SCALE: | SHEET OF SHEETS | STA. TO STA.

F.A.I. RTE.	SECTION	COUNTY	TOTAL SHEETS	SHEET NO.
474	72[1RS-3:(2-4)RS-2]	PEORIA	240	58
		CONTRACT NO. 68C45		
	ILLINOIS	FED. AID PROJECT		

EB MAXWELL CONNECTOR RAMP CLOSURE/DETOUR

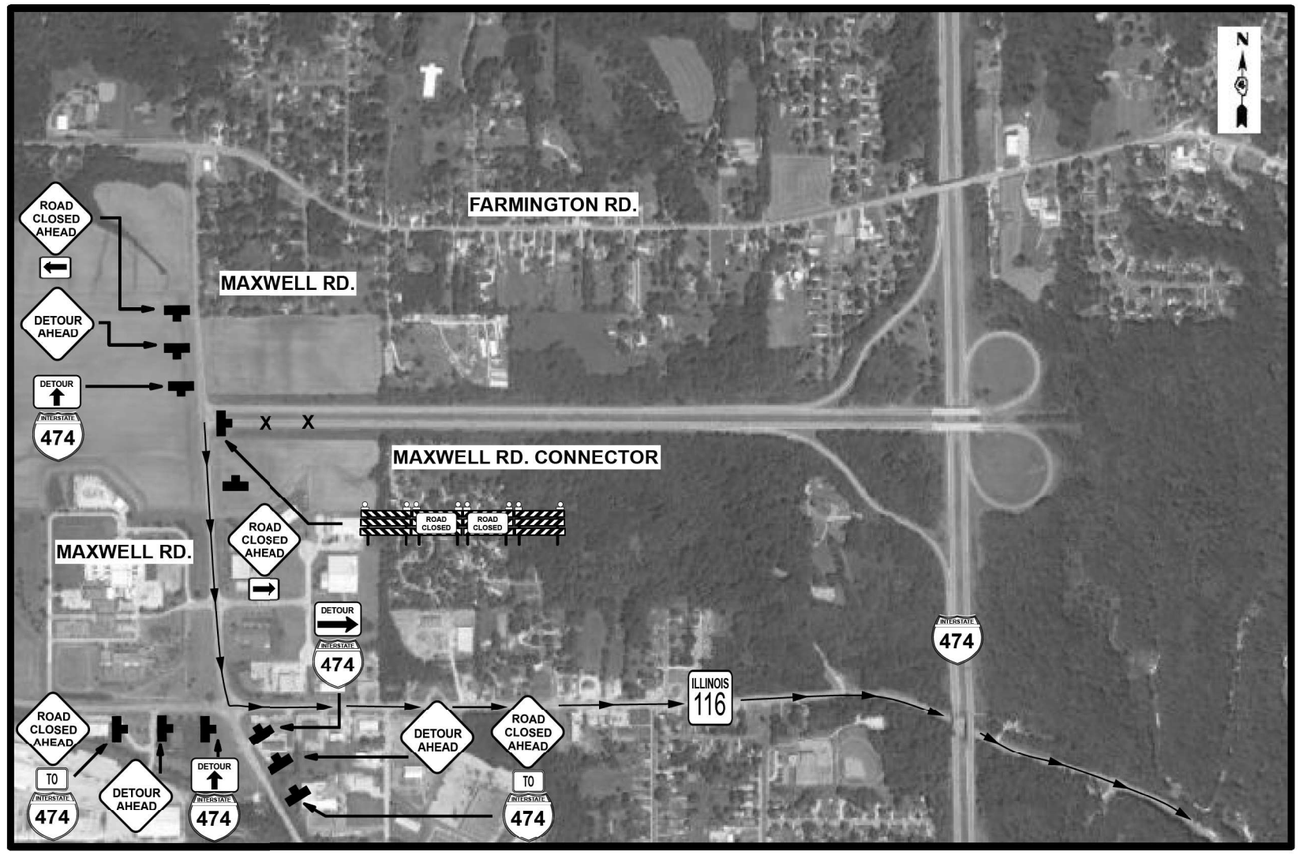

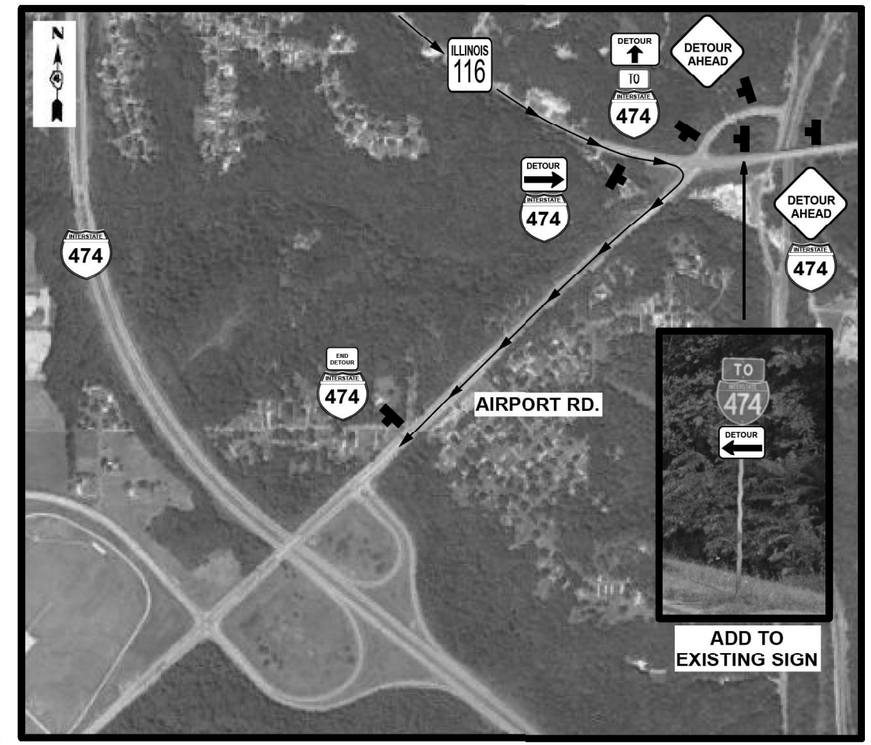

PLACE IN LEFT TURN LANE OF SB MAXWELL RD.

CLOSE TURN LANE WITH DRUMS OR BARRICADES.

TO INTERSTATE 474 ← WHITE ON BLUE

← STANDARD COLORS

SEE WORKING RESTRICTIONS & TRAFFIC CONTROL / STAGING NOTES FOR SEQUENCING OF RAMP CLOSURES.

MODEL: $MODELNAME$
FILE NAME: $FILEL$

USER NAME = $USER$	DESIGNED -	REVISED -	STATE OF ILLINOIS DEPARTMENT OF TRANSPORTATION
	DRAWN -	REVISED -	
PLOT SCALE = $SCALE$	CHECKED -	REVISED -	
PLOT DATE = $DATE$	DATE -	REVISED -	

MAXWELL INTERCHANGE DETOURS
RAMPS E & G

SCALE: SHEET OF SHEETS STA. TO STA.

F.A.I. RTE.	SECTION	COUNTY	TOTAL SHEETS	SHEET NO.
474	72[1RS-3:(2-4)RS-2]	PEORIA	240	59

CONTRACT NO. 68C45

ILLINOIS FED. AID PROJECT

AIRPORT RD.-RAMP A CLOSURE/DETOUR

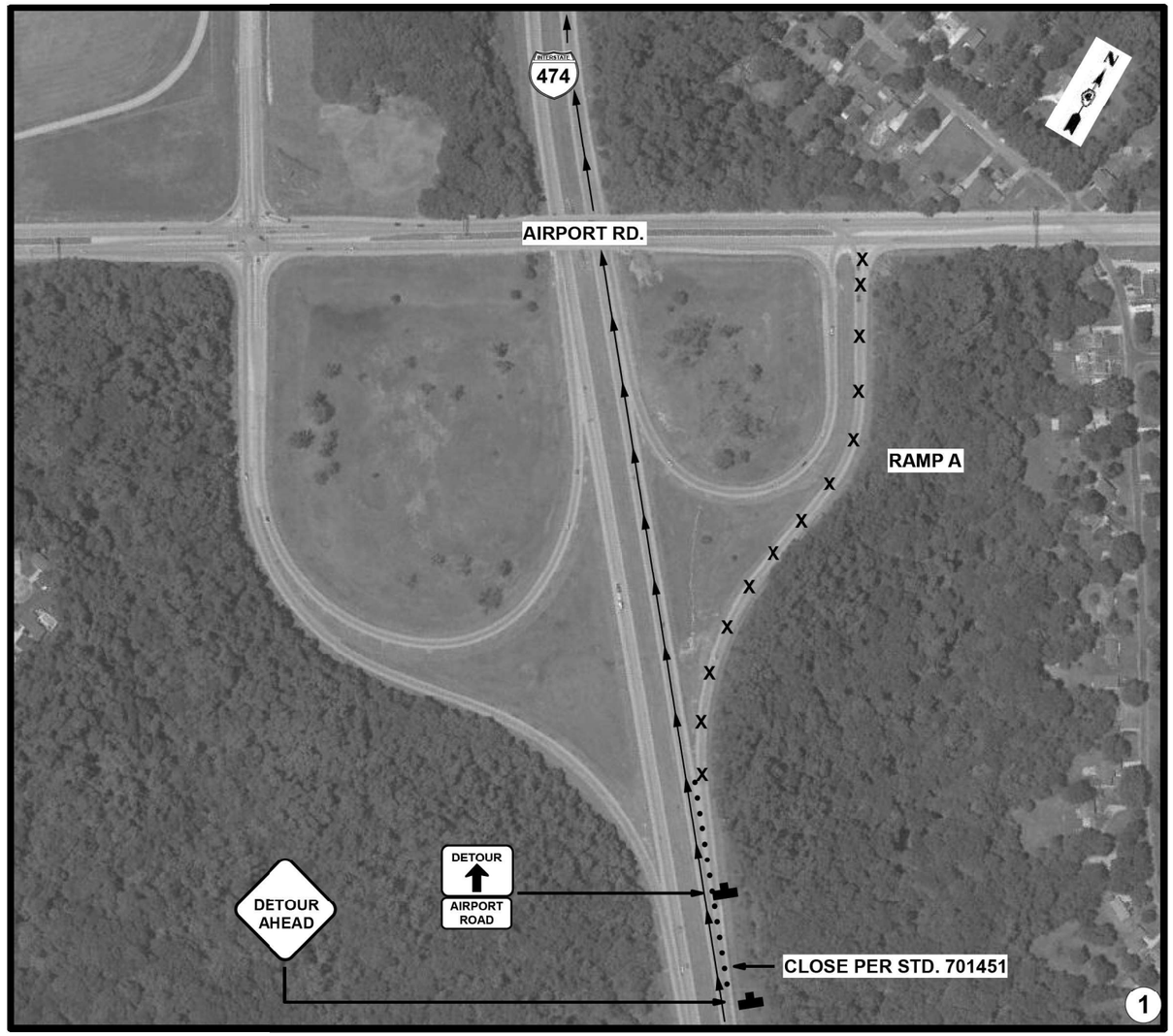

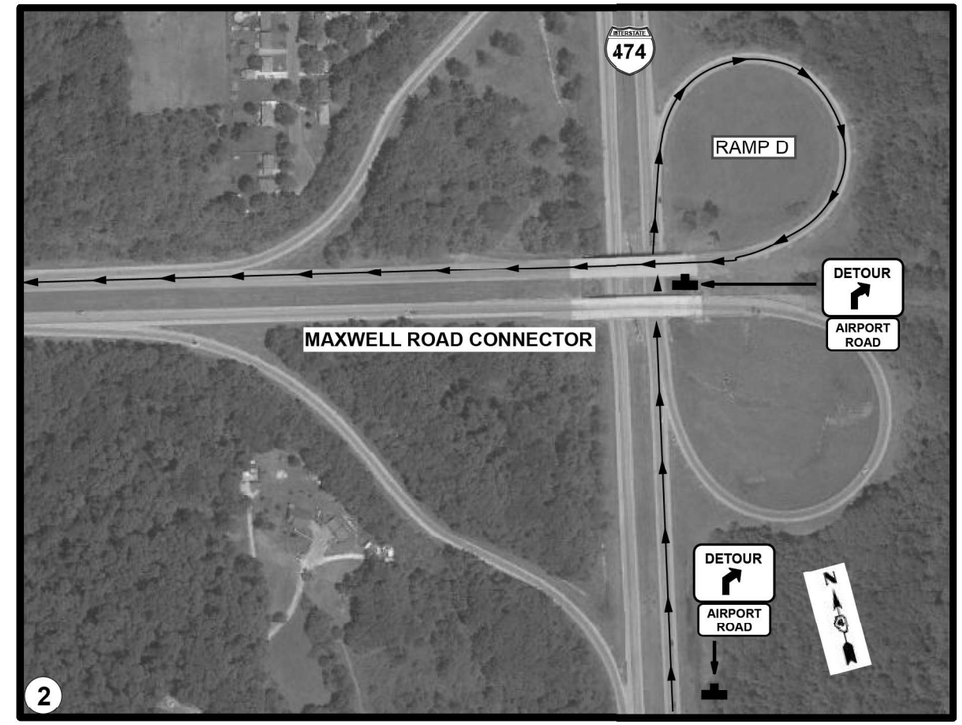

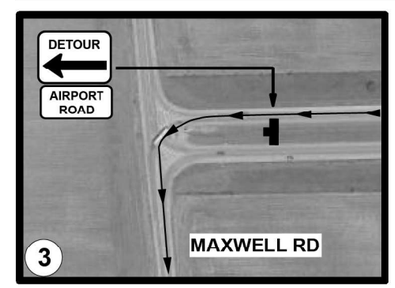

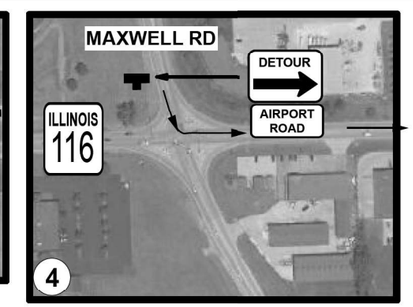

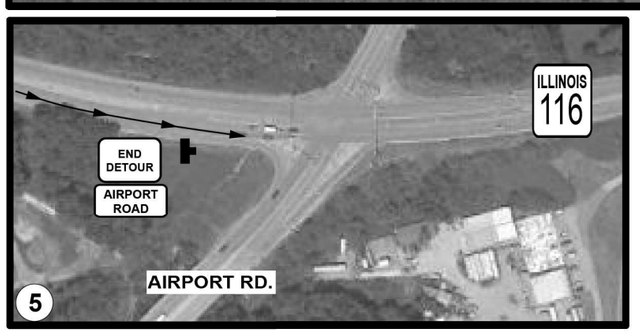

SEE WORKING RESTRICTIONS & TRAFFIC CONTROL / STAGING NOTES FOR SEQUENCING OF RAMP CLOSURES.

MODEL: $MODEL NAME$
FILE NAME: $FILE$

USER NAME = $USER$	DESIGNED -	REVISED -	STATE OF ILLINOIS DEPARTMENT OF TRANSPORTATION
	DRAWN -	REVISED -	
PLOT SCALE = $SCALE$	CHECKED -	REVISED -	
PLOT DATE = $DATE$	DATE -	REVISED -	

AIRPORT INTERCHANGE DETOUR
RAMP A

SCALE: SHEET OF SHEETS STA. TO STA.

F.A.I. RTE.	SECTION	COUNTY	TOTAL SHEETS	SHEET NO.
474	72[1RS-3;(2-4)RS-2]	PEORIA	240	60
		CONTRACT NO. 68C45		
	ILLINOIS	FED. AID PROJECT		

AIRPORT RD.-RAMP B CLOSURE/DETOUR

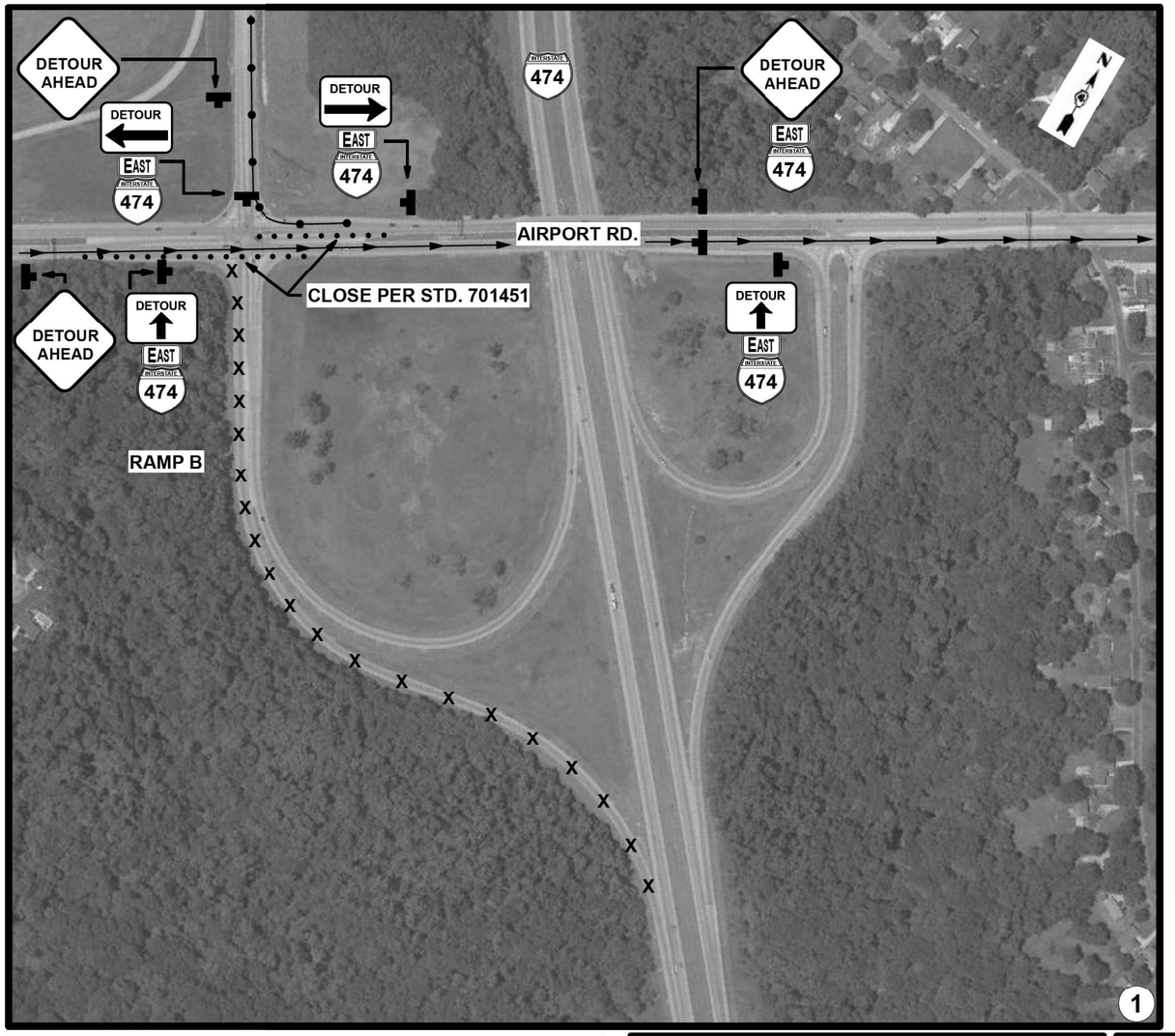

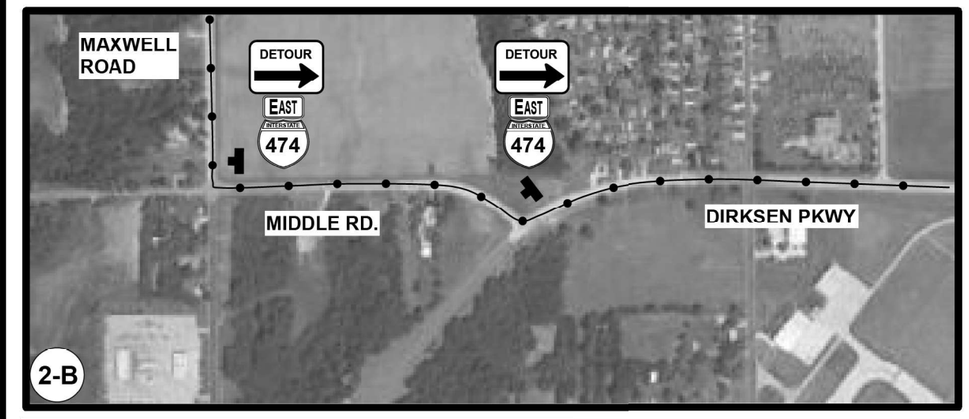

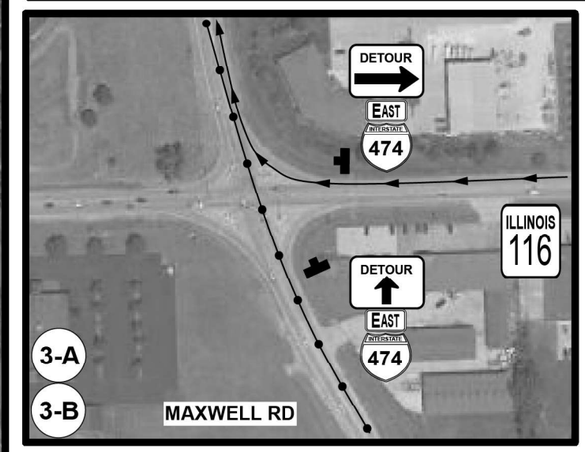

SEE WORKING RESTRICTIONS & TRAFFIC CONTROL / STAGING NOTES FOR SEQUENCING OF RAMP CLOSURES.

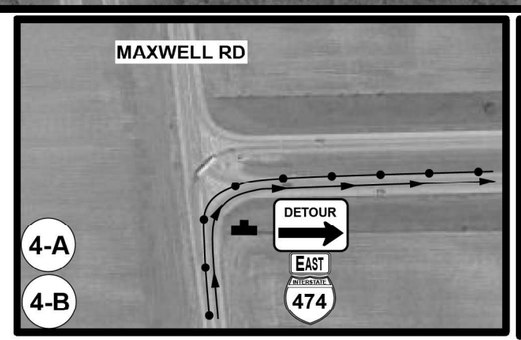

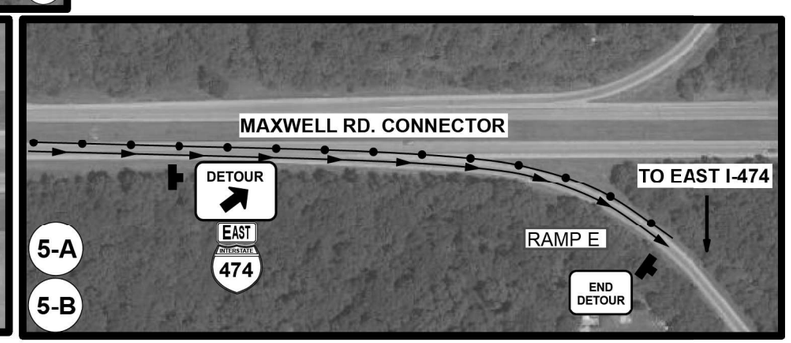

MODEL: $MODELNAME$
FILE NAME: $FILEL$

USER NAME = $USER$	DESIGNED -	REVISED -	
	DRAWN -	REVISED -	
PLOT SCALE = $SCALE$	CHECKED -	REVISED -	
PLOT DATE = $DATE$	DATE -	REVISED -	

STATE OF ILLINOIS
DEPARTMENT OF TRANSPORTATION

AIRPORT INTERCHANGE DETOUR
RAMP B

SCALE: | SHEET OF SHEETS | STA. | TO STA.

F.A.I. RTE.	SECTION	COUNTY	TOTAL SHEETS	SHEET NO.
474	72[1RS-3;(2-4)RS-2]	PEORIA	240	61
		CONTRACT NO. 68C45		
	ILLINOIS	FED. AID PROJECT		

AIRPORT RD.-RAMP C CLOSURE/DETOUR

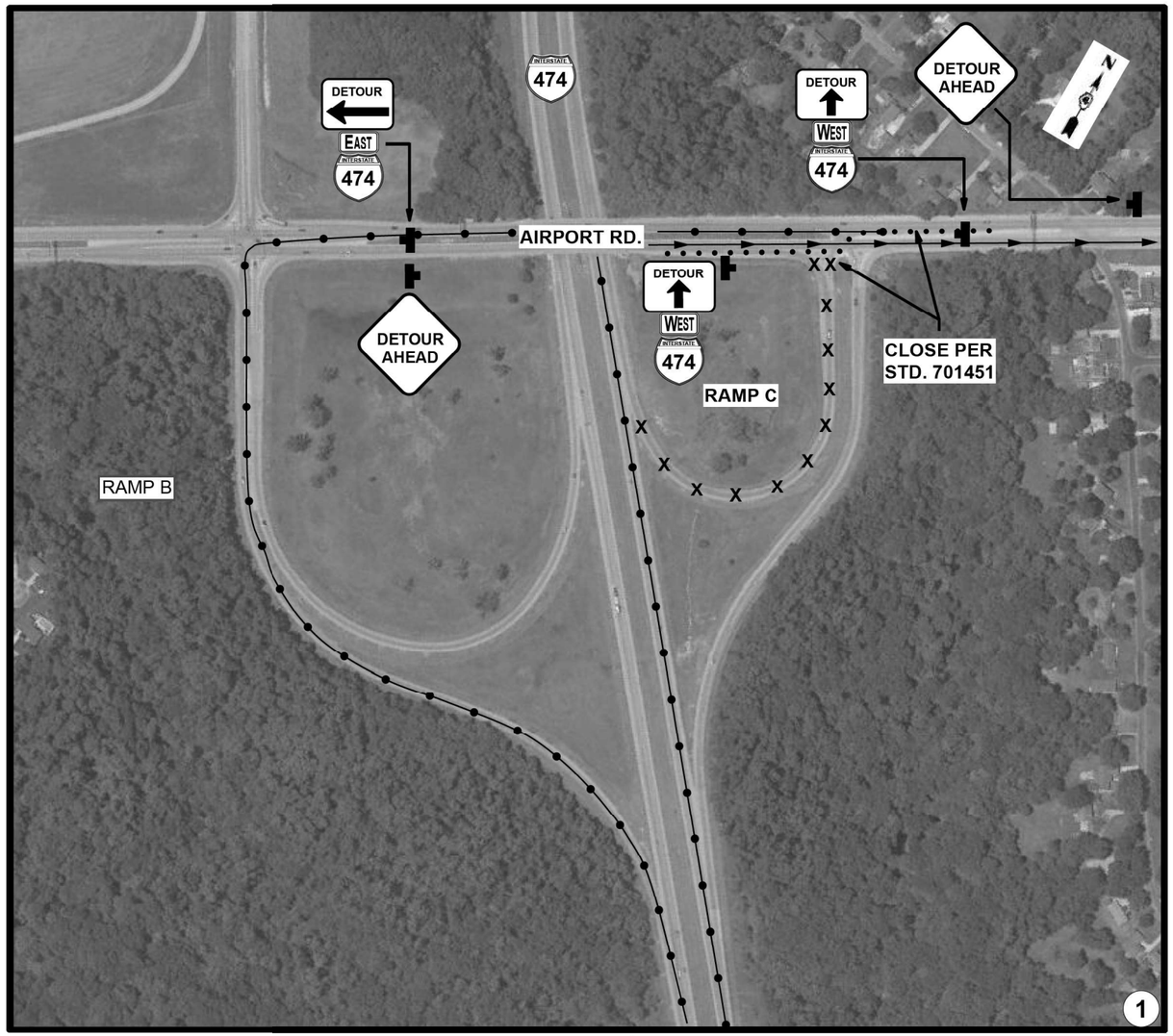

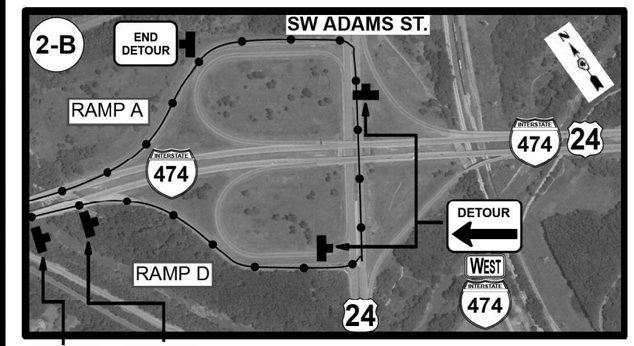

SEE WORKING RESTRICTIONS & TRAFFIC CONTROL / STAGING NOTES FOR SEQUENCING OF RAMP CLOSURES.

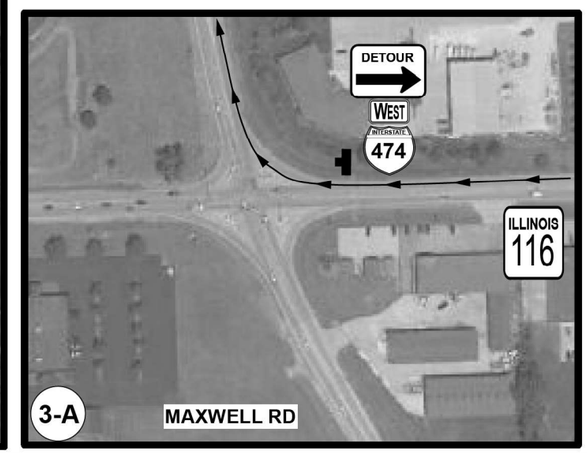

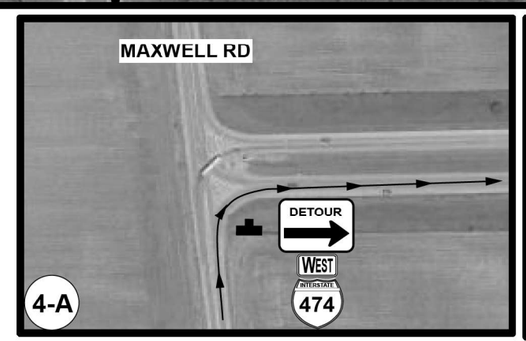

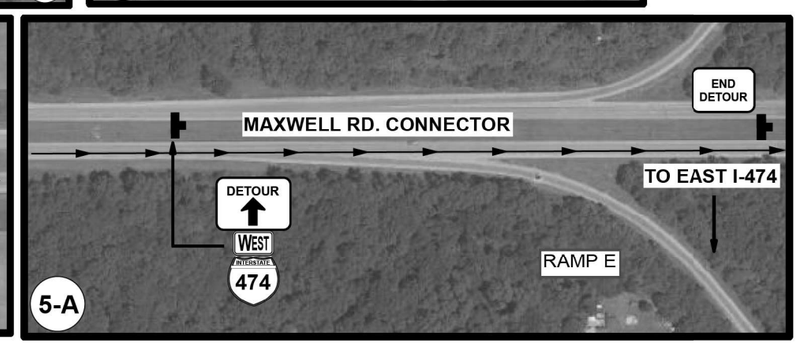

MODEL: $MODELNAME$
FILE NAME: $FILEL$

USER NAME = $USER$	DESIGNED -	REVISED -	STATE OF ILLINOIS DEPARTMENT OF TRANSPORTATION
	DRAWN -	REVISED -	
PLOT SCALE = $SCALE$	CHECKED -	REVISED -	
PLOT DATE = $DATE$	DATE -	REVISED -	

AIRPORT INTERCHANGE DETOUR
RAMP C

SCALE: | SHEET OF SHEETS | STA. TO STA.

F.A.I. RTE.	SECTION	COUNTY	TOTAL SHEETS	SHEET NO.
474	72[1RS-3:(2-4)RS-2]	PEORIA	240	62
		CONTRACT NO. 68C45		
	ILLINOIS	FED. AID PROJECT		

AIRPORT RD.-RAMP D CLOSURE/DETOUR

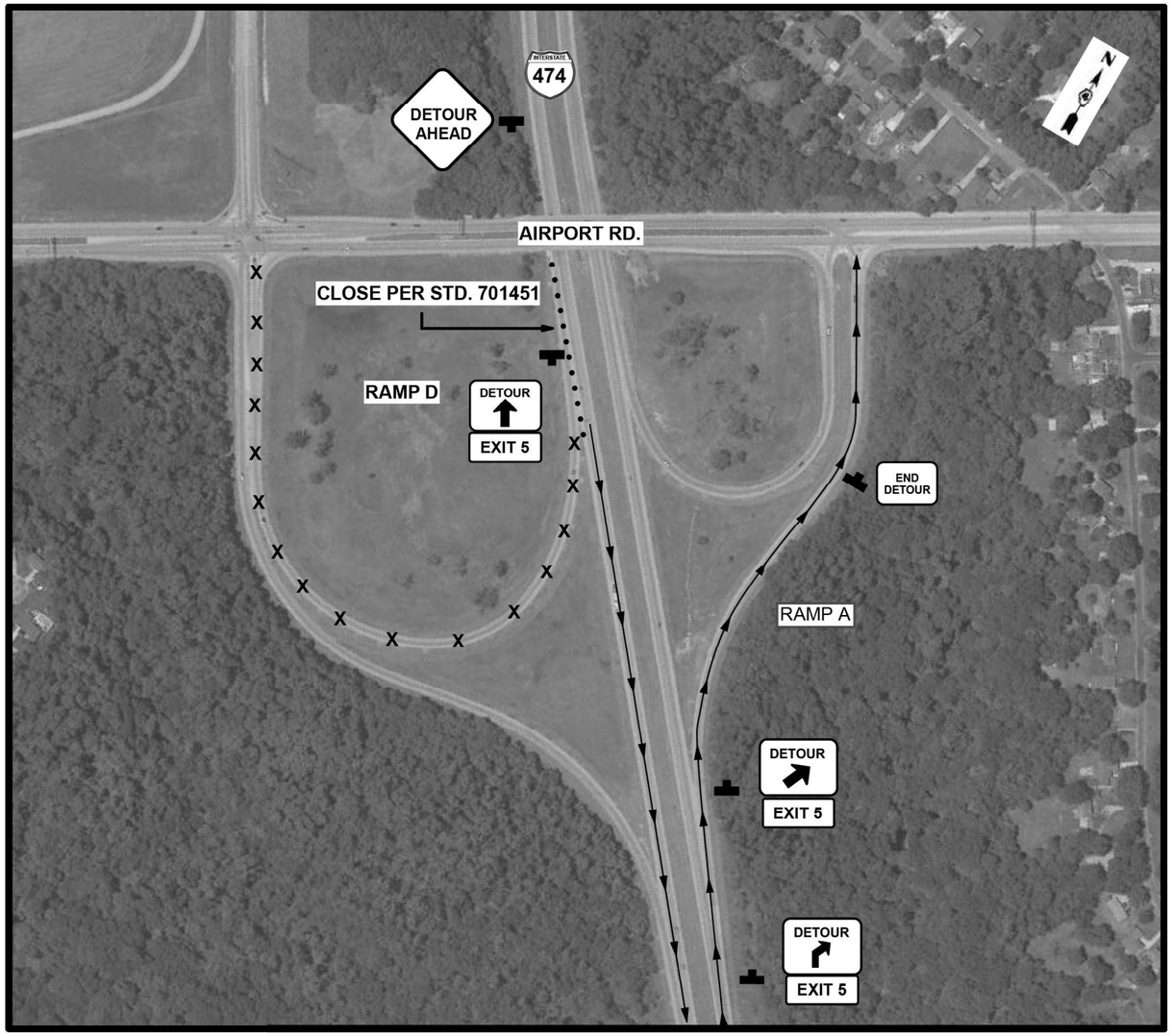

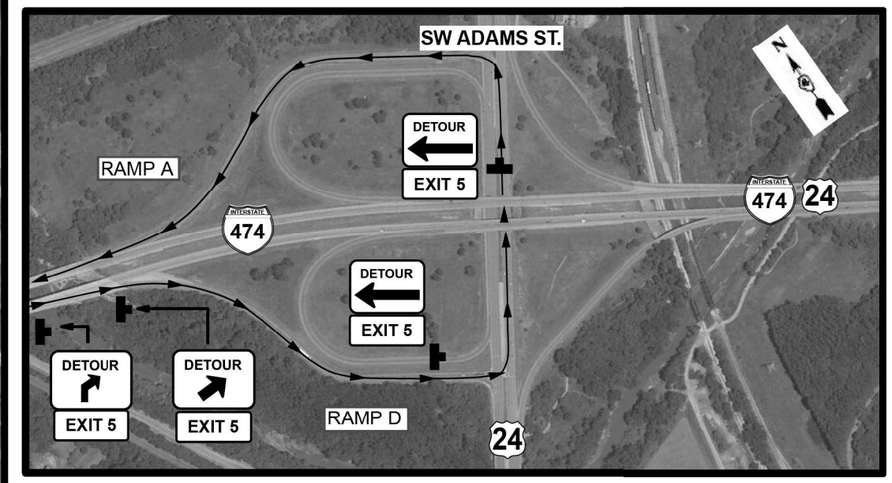

SEE WORKING RESTRICTIONS & TRAFFIC CONTROL / STAGING NOTES FOR SEQUENCING OF RAMP CLOSURES.

MODEL: $MODEL NAME$
FILE NAME: $FILEL$

USER NAME = $USER$	DESIGNED -	REVISED -	STATE OF ILLINOIS DEPARTMENT OF TRANSPORTATION
	DRAWN -	REVISED -	
PLOT SCALE = $SCALE$	CHECKED -	REVISED -	
PLOT DATE = $DATE$	DATE -	REVISED -	

AIRPORT INTERCHANGE DETOUR
RAMP D

SCALE: | SHEET OF SHEETS | STA. TO STA.

F.A.I. RTE.	SECTION	COUNTY	TOTAL SHEETS	SHEET NO.
474	72(1RS-3;(2-4)RS-2)	PEORIA	240	63
		CONTRACT NO. 68C45		
	ILLINOIS	FED. AID PROJECT		

US 24-RAMP A CLOSURE/DETOUR

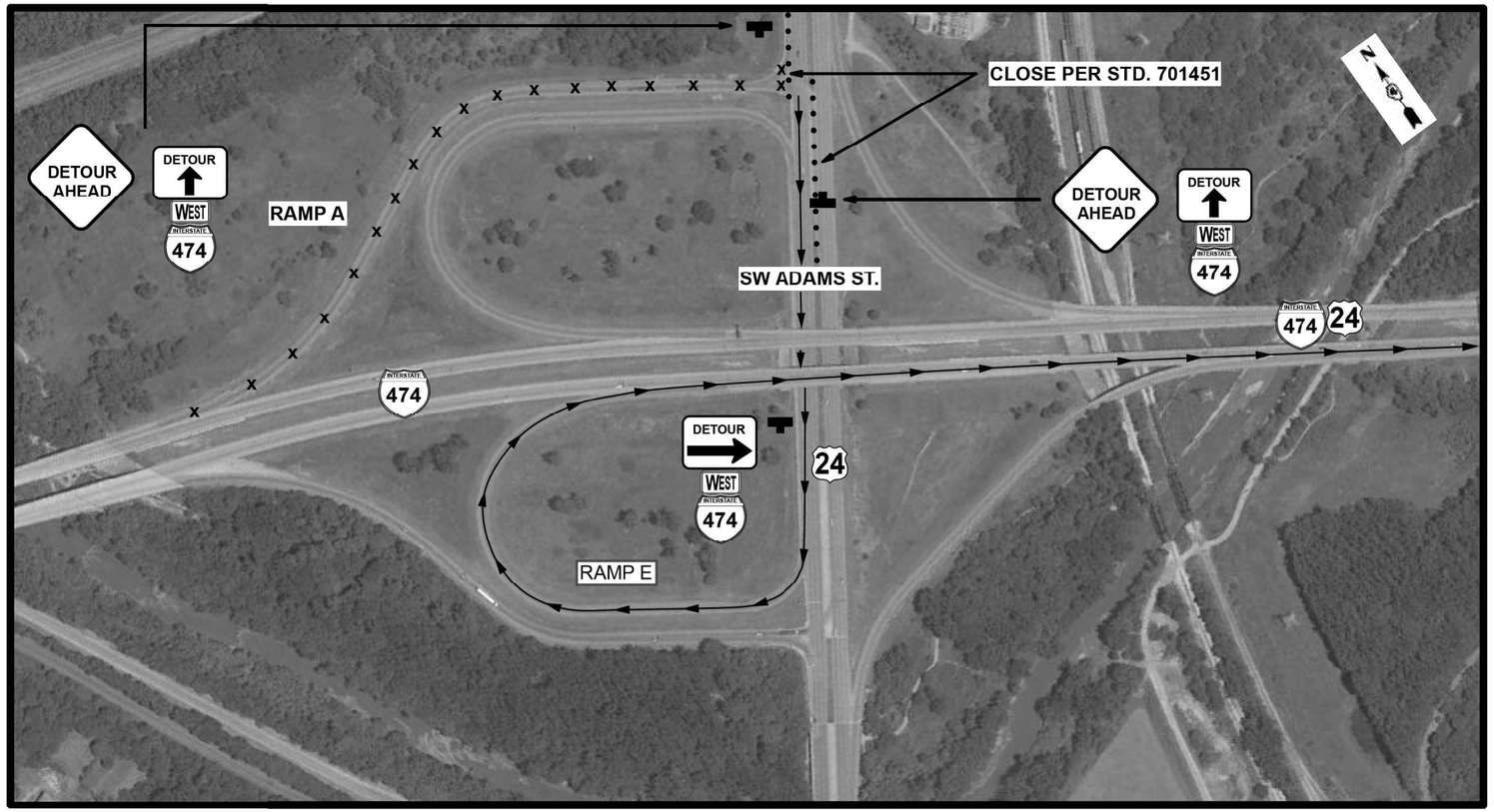

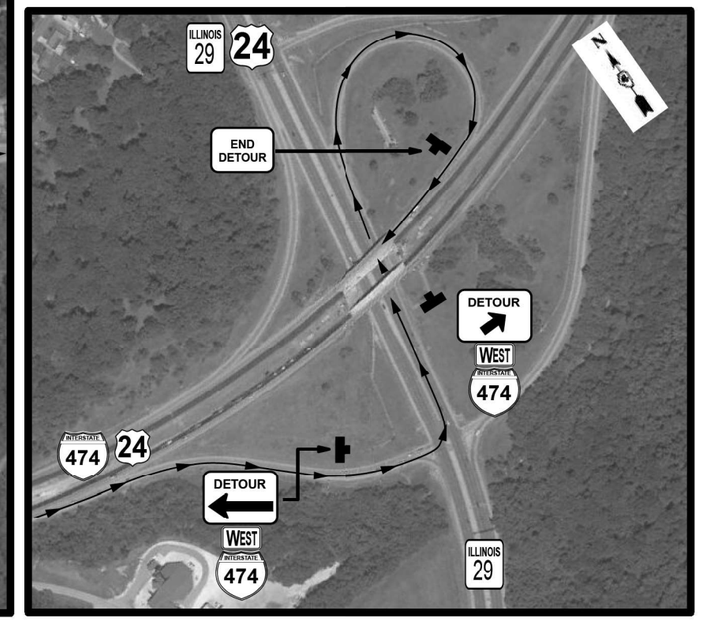

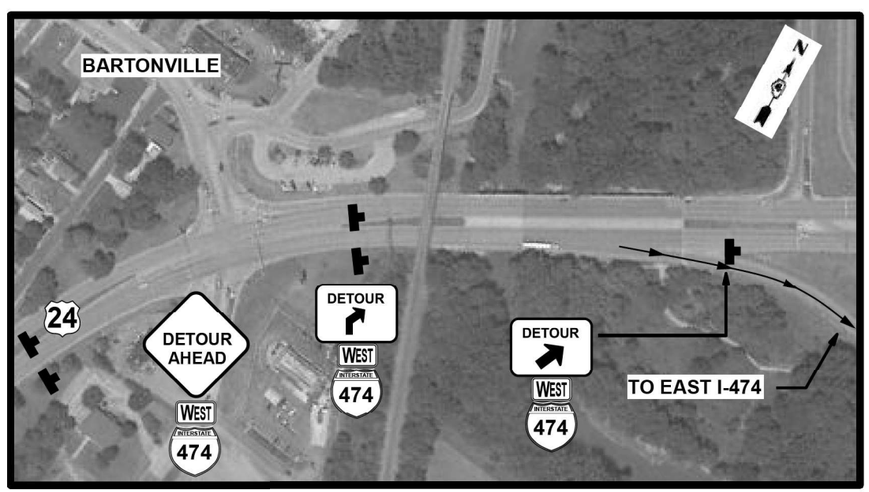

SEE WORKING RESTRICTIONS & TRAFFIC CONTROL / STAGING NOTES FOR SEQUENCING OF RAMP CLOSURES.

MODEL: $MODELNAME$
FILE NAME: $FILEL$

USER NAME = $USER$	DESIGNED -	REVISED -
	DRAWN -	REVISED -
PLOT SCALE = $SCALE$	CHECKED -	REVISED -
PLOT DATE = $DATE$	DATE -	REVISED -

STATE OF ILLINOIS
DEPARTMENT OF TRANSPORTATION

US 24 INTERCHANGE DETOUR
RAMP A

SCALE: | SHEET OF SHEETS | STA. TO STA.

F.A.I. RTE.	SECTION	COUNTY	TOTAL SHEETS	SHEET NO.
474	72(1RS-3:(2-4)RS-2]	PEORIA	240	64
		CONTRACT NO. 68C45		

ILLINOIS | FED. AID PROJECT

US 24-RAMP B CLOSURE/DETOUR

SEE WORKING RESTRICTIONS & TRAFFIC CONTROL / STAGING NOTES FOR SEQUENCING OF RAMP CLOSURES.

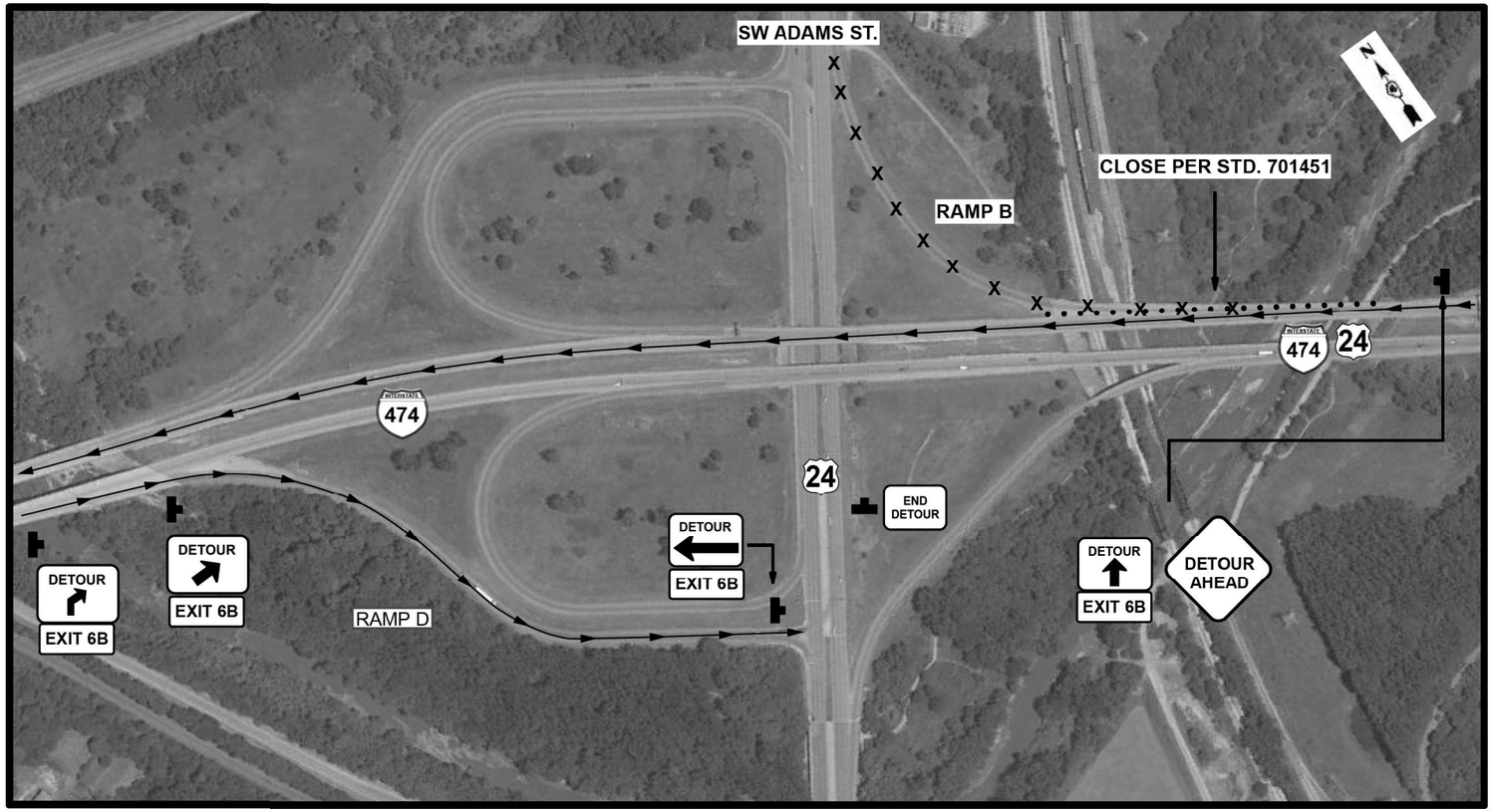

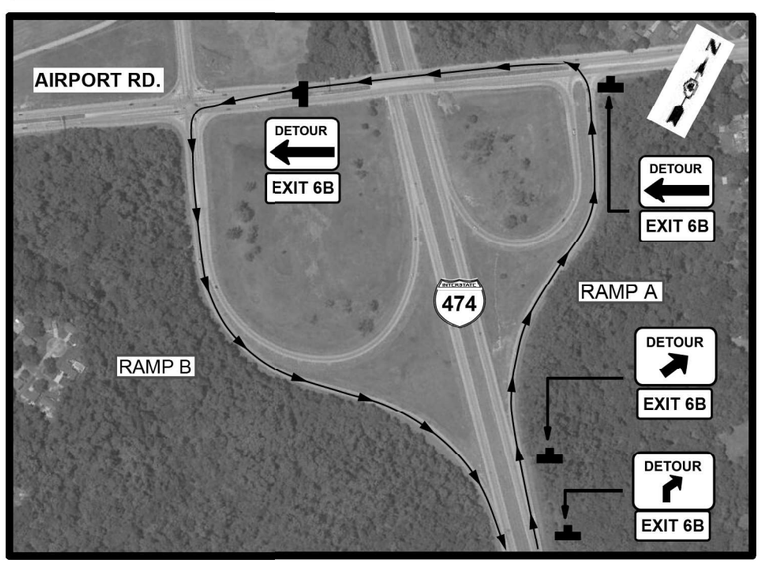

MODEL: $MODEL$NAME$
FILE NAME: $FILEL$

USER NAME = $USER$	DESIGNED -	REVISED -	
	DRAWN -	REVISED -	
PLOT SCALE = $SCALE$	CHECKED -	REVISED -	
PLOT DATE = $DATE$	DATE -	REVISED -	

STATE OF ILLINOIS
DEPARTMENT OF TRANSPORTATION

US 24 INTERCHANGE DETOUR
RAMP B

SCALE: | SHEET OF SHEETS | STA. TO STA.

F.A.I. RTE.	SECTION	COUNTY	TOTAL SHEETS	SHEET NO.
474	72(1RS-3:(2-4)RS-2)	PEORIA	240	65

CONTRACT NO. 68C45

ILLINOIS | FED. AID PROJECT

US 24-RAMP C CLOSURE/DETOUR

SEE WORKING RESTRICTIONS & TRAFFIC CONTROL / STAGING NOTES FOR SEQUENCING OF RAMP CLOSURES.

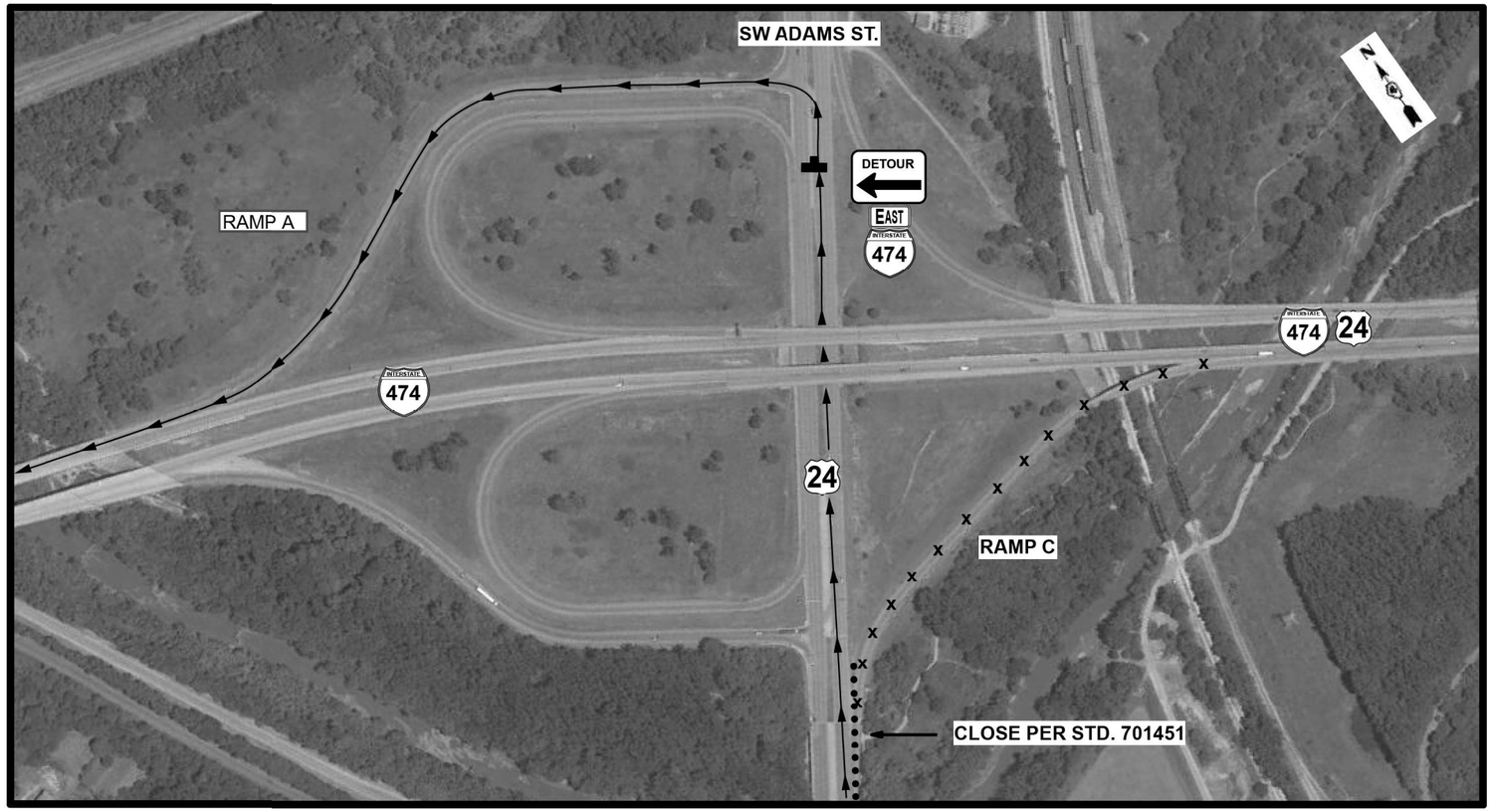

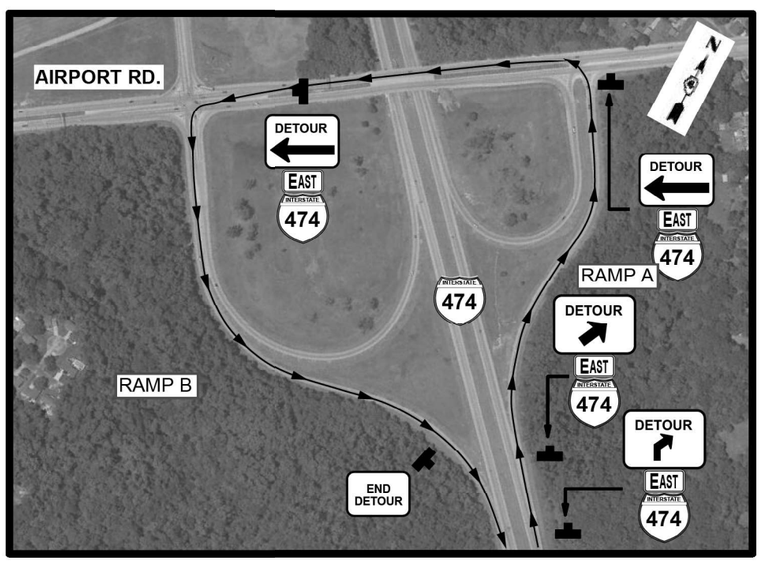

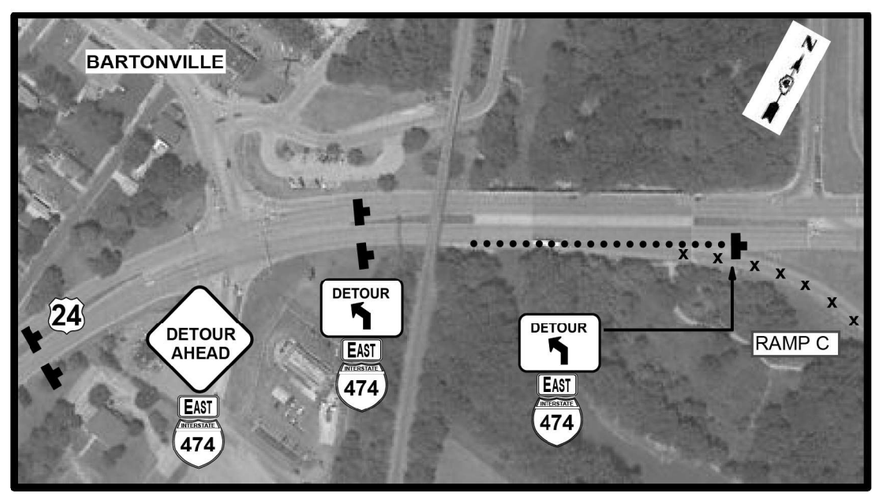

MODEL: $MODELNAME$
FILE NAME: $FILEL$

USER NAME = $USER$	DESIGNED -	REVISED -	
	DRAWN -	REVISED -	
PLOT SCALE = $SCALE$	CHECKED -	REVISED -	
PLOT DATE = $DATE$	DATE -	REVISED -	

STATE OF ILLINOIS
DEPARTMENT OF TRANSPORTATION

US 24 INTERCHANGE DETOUR
RAMP C

SCALE: | SHEET OF SHEETS | STA. TO STA.

F.A.I. RTE.	SECTION	COUNTY	TOTAL SHEETS	SHEET NO.
474	72[1RS-3:(2-4)RS-2]	PEORIA	240	66
		CONTRACT NO. 68C45		
	ILLINOIS	FED. AID PROJECT		

US 24-RAMP D CLOSURE/DETOUR

SEE WORKING RESTRICTIONS & TRAFFIC CONTROL / STAGING NOTES FOR SEQUENCING OF RAMP CLOSURES.

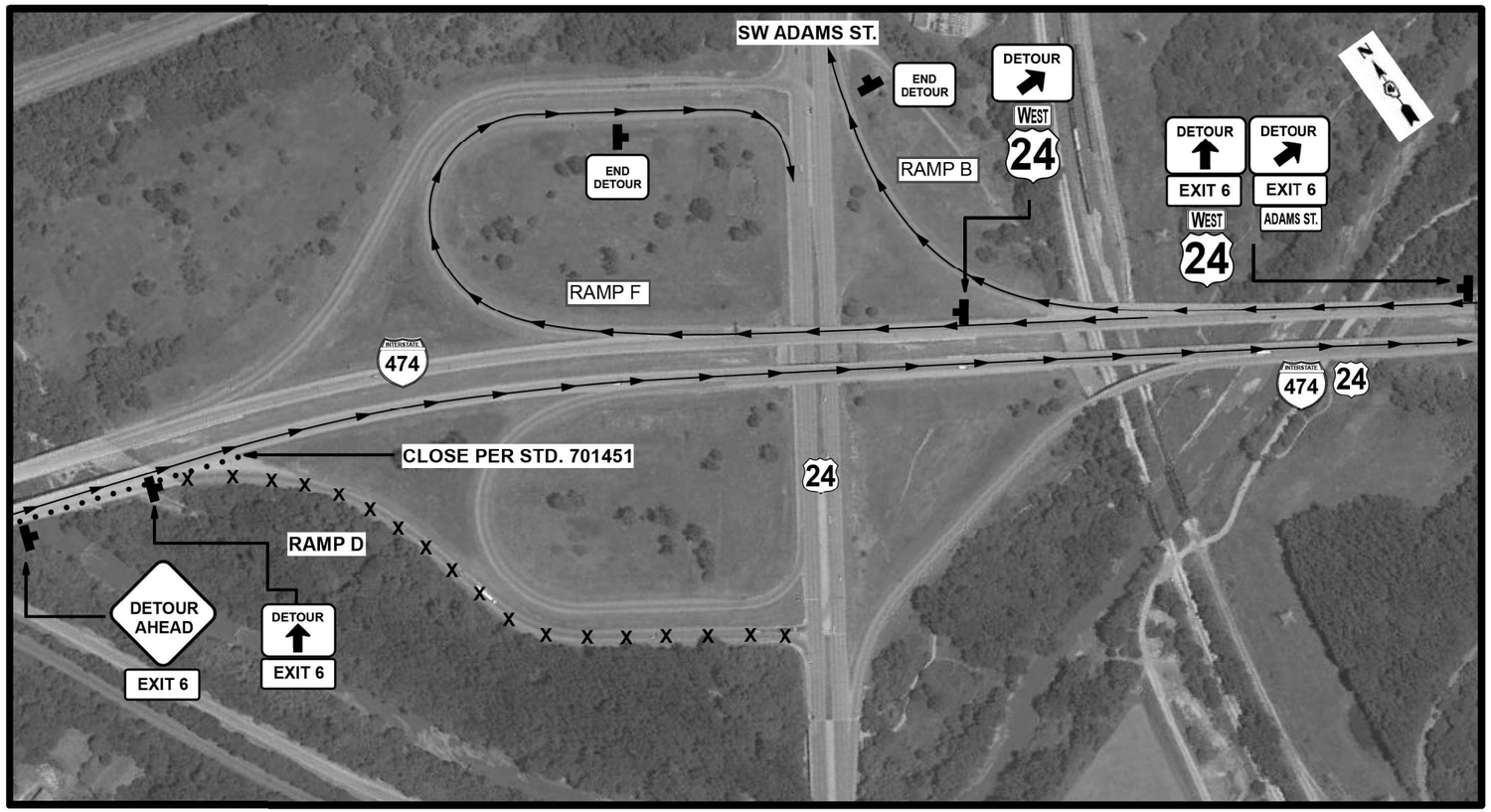

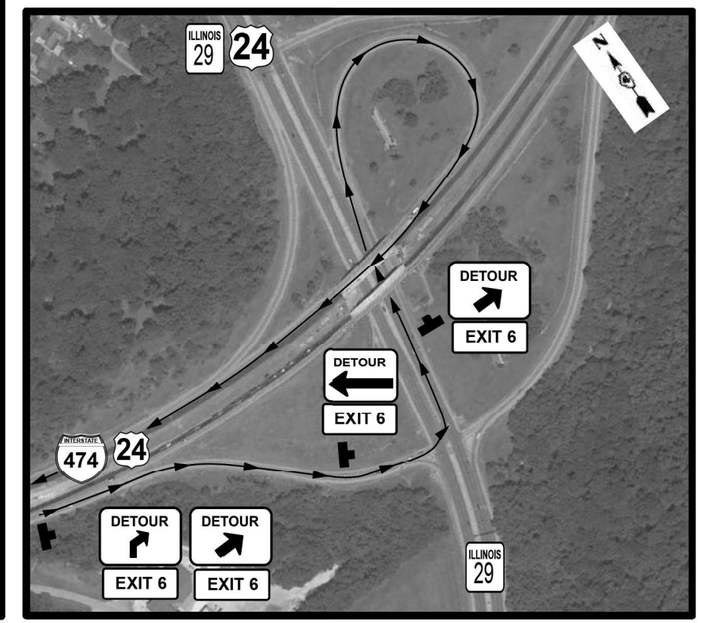

MODEL: $MODEL$NAME$
FILE NAME: $FILE$

USER NAME = $USER$	DESIGNED -	REVISED -	
	DRAWN -	REVISED -	
PLOT SCALE = $SCALE$	CHECKED -	REVISED -	
PLOT DATE = $DATE$	DATE -	REVISED -	

STATE OF ILLINOIS
DEPARTMENT OF TRANSPORTATION

US 24 INTERCHANGE DETOUR
RAMP D

SCALE: | SHEET OF SHEETS | STA. TO STA.

F.A.I. RTE.	SECTION	COUNTY	TOTAL SHEETS	SHEET NO.
474	72[1RS-3:(2-4)RS-2]	PEORIA	240	67
		CONTRACT NO. 68C45		
		ILLINOIS FED. AID PROJECT		

US 24-RAMP E CLOSURE/DETOUR

SEE WORKING RESTRICTIONS & TRAFFIC CONTROL / STAGING NOTES FOR SEQUENCING OF RAMP CLOSURES.

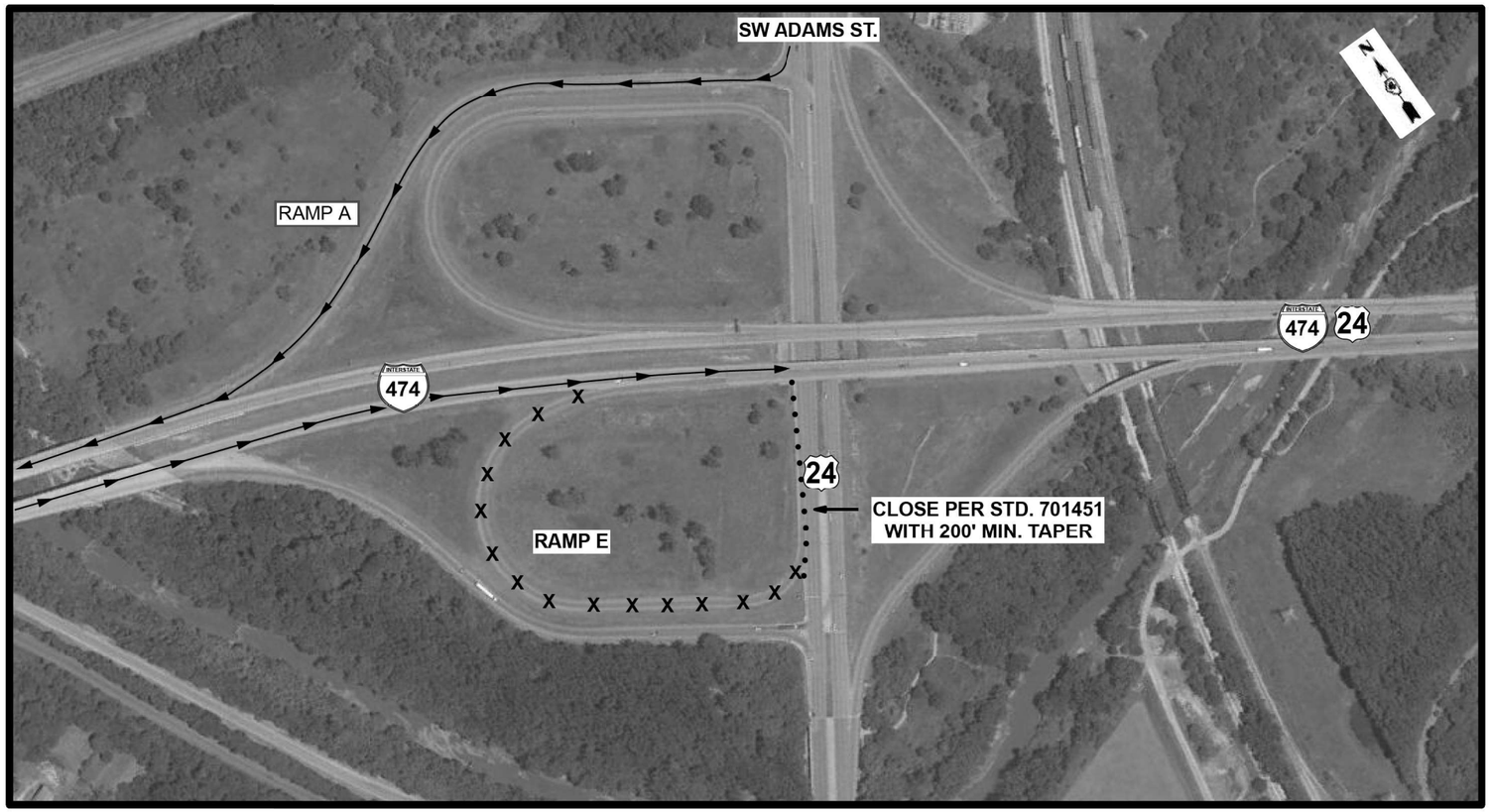

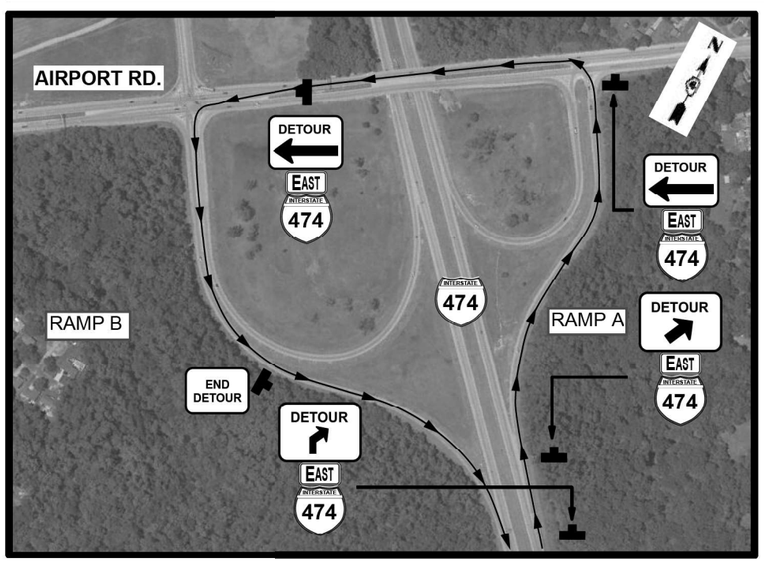

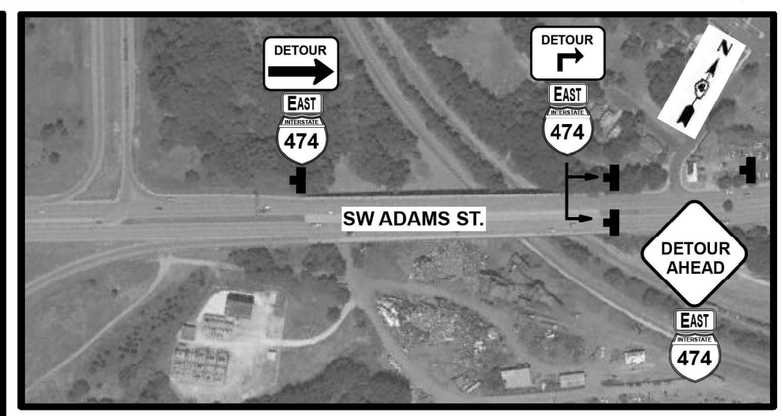

MODEL: $MODELNAME$
FILE NAME: $FILEL$

USER NAME = $USER$	DESIGNED -	REVISED -	
	DRAWN -	REVISED -	
PLOT SCALE = $SCALE$	CHECKED -	REVISED -	
PLOT DATE = $DATE$	DATE -	REVISED -	

STATE OF ILLINOIS
DEPARTMENT OF TRANSPORTATION

US 24 INTERCHANGE DETOUR
RAMP E

SCALE: | SHEET OF SHEETS | STA. TO STA.

F.A.I. RTE.	SECTION	COUNTY	TOTAL SHEETS	SHEET NO.
474	72[1RS-3;(2-4)RS-2]	PEORIA	240	68
		CONTRACT NO. 68C45		
	ILLINOIS	FED. AID PROJECT		

US 24-RAMP F CLOSURE/DETOUR

SEE WORKING RESTRICTIONS & TRAFFIC CONTROL / STAGING NOTES FOR SEQUENCING OF RAMP CLOSURES.

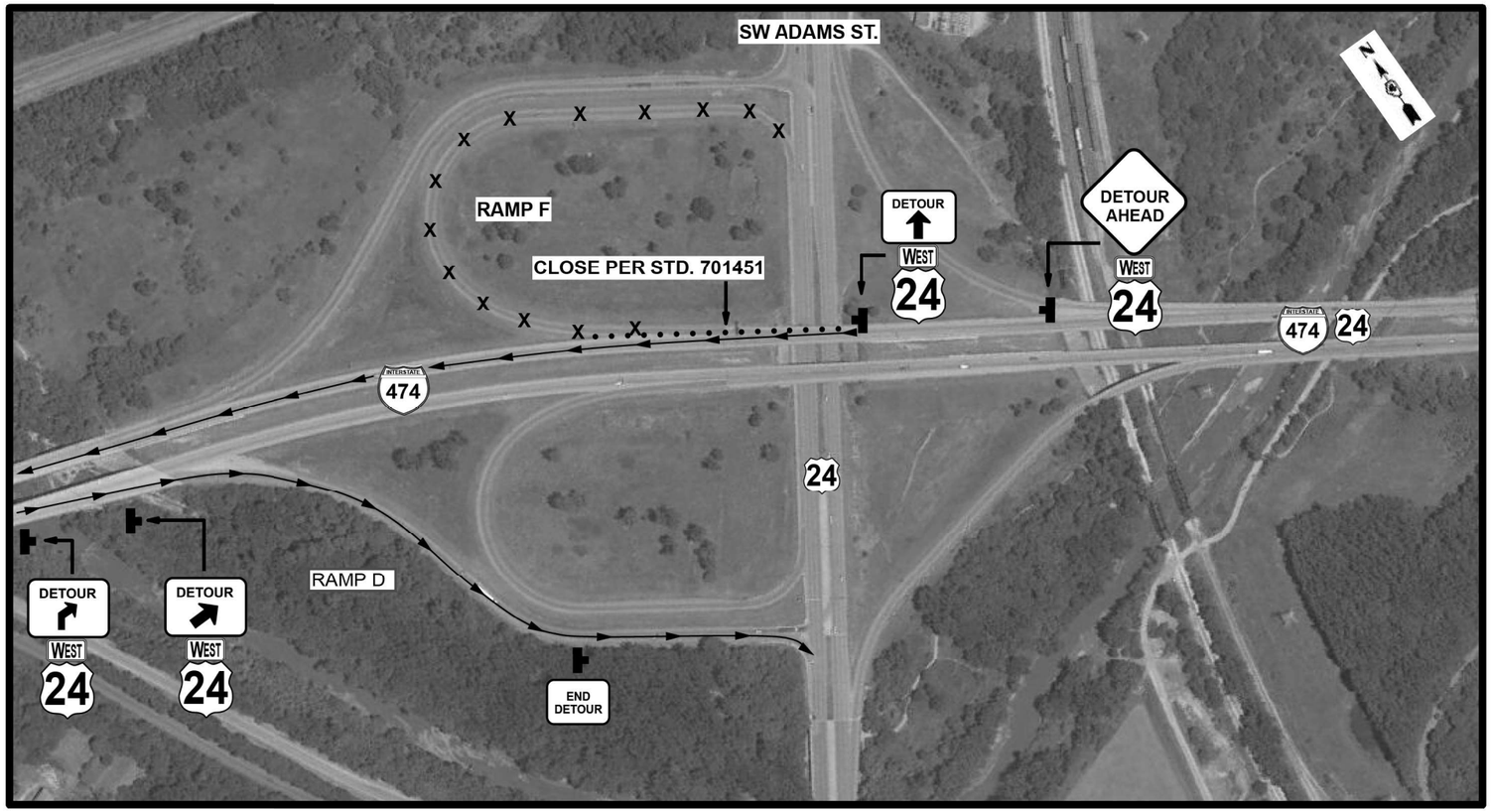

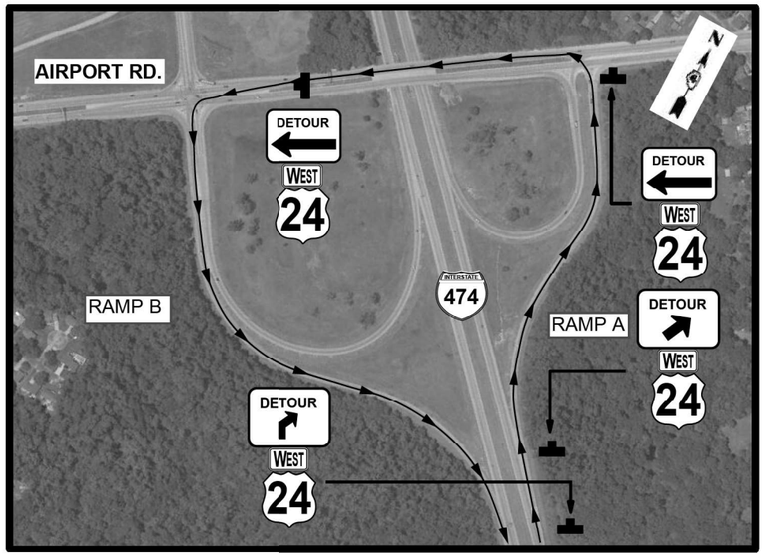

MODEL: $MODEL NAME$
FILE NAME: $FILE1$

USER NAME = $USER$	DESIGNED -	REVISED -	
	DRAWN -	REVISED -	
PLOT SCALE = $SCALE$	CHECKED -	REVISED -	
PLOT DATE = $DATE$	DATE -	REVISED -	

STATE OF ILLINOIS
DEPARTMENT OF TRANSPORTATION

US 24 INTERCHANGE DETOUR
RAMP F

SCALE: | SHEET OF SHEETS | STA. TO STA.

F.A.I. RTE.	SECTION	COUNTY	TOTAL SHEETS	SHEET NO.
474	72[1RS-3:(2-4)RS-2]	PEORIA	240	69
		CONTRACT NO. 68C45		
		ILLINOIS	FED. AID PROJECT	

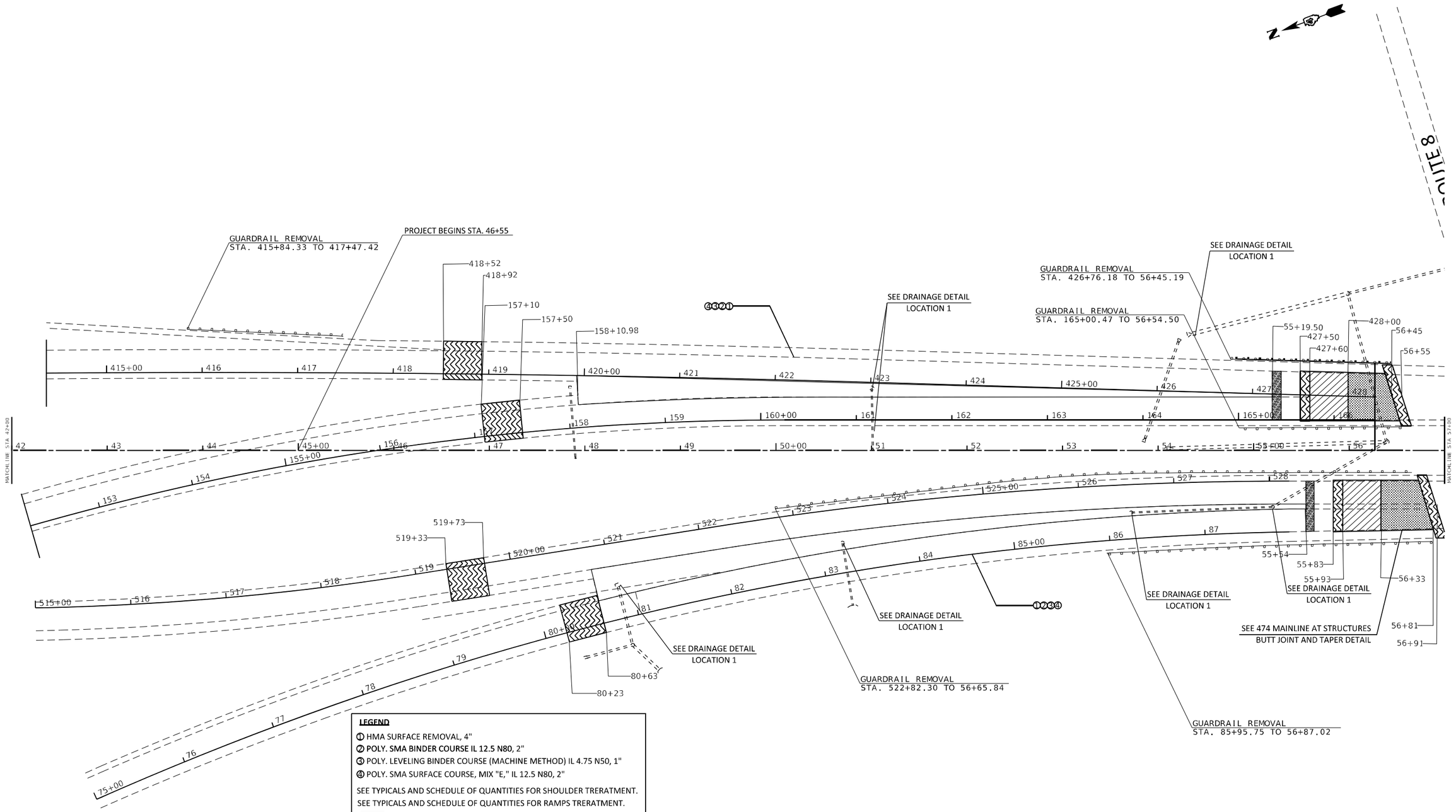

LEGEND

1. HMA SURFACE REMOVAL, 4"
2. POLY. SMA BINDER COURSE IL 12.5 N80, 2"
3. POLY. LEVELING BINDER COURSE (MACHINE METHOD) IL 4.75 N50, 1"
4. POLY. SMA SURFACE COURSE, MIX "E," IL 12.5 N80, 2"

SEE TYPICALS AND SCHEDULE OF QUANTITIES FOR SHOULDER TRERATMENT.
SEE TYPICALS AND SCHEDULE OF QUANTITIES FOR RAMPS TRERATMENT.

- HMA SURFACE REMOVAL BUTT JOINT
- HMA SURFACE REMOVAL, VARIABLE DEPTH
- HMA SURFACE REMOVAL, 3"
- EXPANSION JOINT
- HMA SURFACE REMOVAL 2", 2" SMA SURFACE

MODEL: $MODEL NAME$
FILE NAME: $FILE$

USER NAME = $USER$	DESIGNED -	REVISED -	
	DRAWN -	REVISED -	
PLOT SCALE = $SCALE$	CHECKED -	REVISED -	
PLOT DATE = $DATE$	DATE -	REVISED -	

STATE OF ILLINOIS
DEPARTMENT OF TRANSPORTATION

PROPOSED AND REMOVAL SHEETS
PROPOSED AND REMOVAL SHEETS

SCALE: | SHEET OF SHEETS | STA. TO STA.

F.A.I. RTE.	SECTION	COUNTY	TOTAL SHEETS	SHEET NO.
474	72-(1)RS-3;(2,3,4)RS-2	PEORIA	240	70
		CONTRACT NO. 68C45		
		ILLINOIS FED. AID PROJECT		

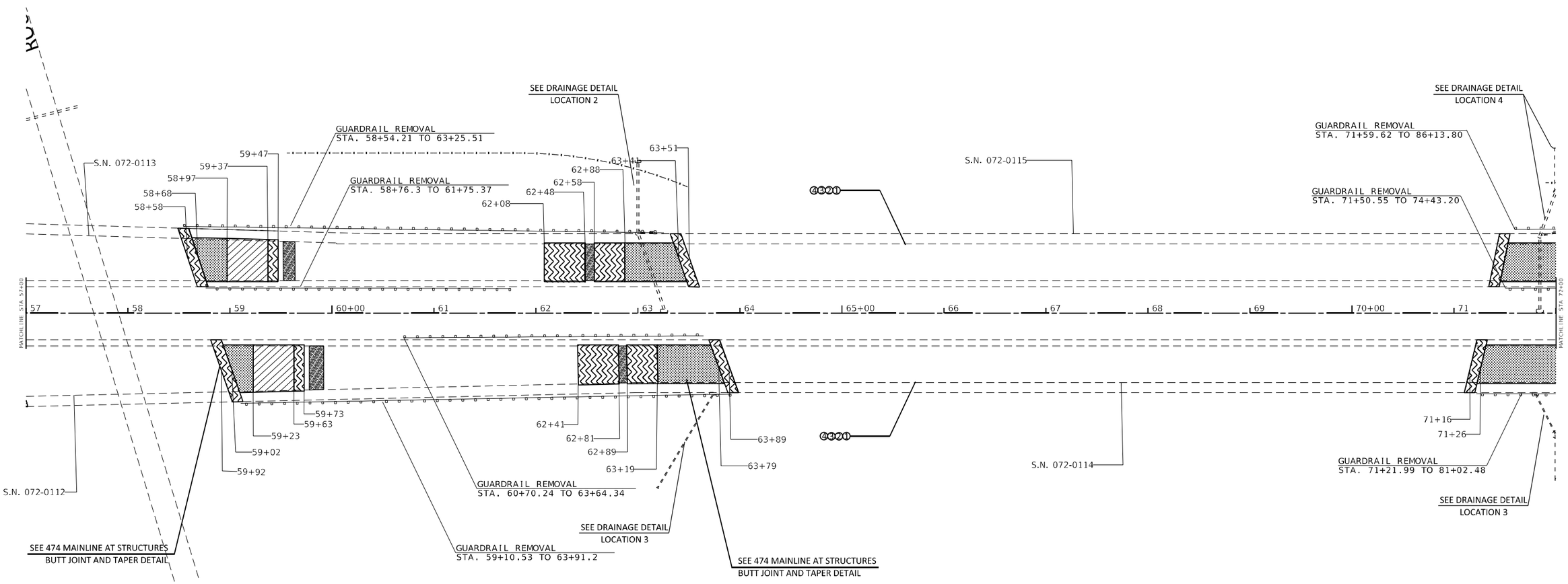

LEGEND

1. HMA SURFACE REMOVAL, 4"
2. POLY. SMA BINDER COURSE IL 12.5 N80, 2"
3. POLY. LEVELING BINDER COURSE (MACHINE METHOD) IL 4.75 N50, 1"
4. POLY. SMA SURFACE COURSE, MIX "E," IL 12.5 N80, 2"

SEE TYPICALS AND SCHEDULE OF QUANTITIES FOR SHOULDER TRERATMENT.
SEE TYPICALS AND SCHEDULE OF QUANTITIES FOR RAMPS TRERATMENT.

- HMA SURFACE REMOVAL BUTT JOINT
- HMA SURFACE REMOVAL, VARIABLE DEPTH
- HMA SURFACE REMOVAL, 3"
- EXPANSION JOINT
- HMA SURFACE REMOVAL 2", 2" SMA SURFACE

0 50 100
SCALE IN FEET

MODEL: $MODEL NAME$
FILE NAME: $FILE$

USER NAME = $USER$	DESIGNED -	REVISED -	
	DRAWN -	REVISED -	
PLOT SCALE = $SCALE$	CHECKED -	REVISED -	
PLOT DATE = $DATE$	DATE -	REVISED -	

STATE OF ILLINOIS
DEPARTMENT OF TRANSPORTATION

PROPOSED AND REMOVAL SHEETS

SCALE: | SHEET OF SHEETS | STA. TO STA.

F.A.I. RTE.	SECTION	COUNTY	TOTAL SHEETS	SHEET NO.
474	72-(1)RS-3;(2,3,4)RS-2	PEORIA	240	71
		CONTRACT NO. 68C45		
	ILLINOIS	FED. AID PROJECT		

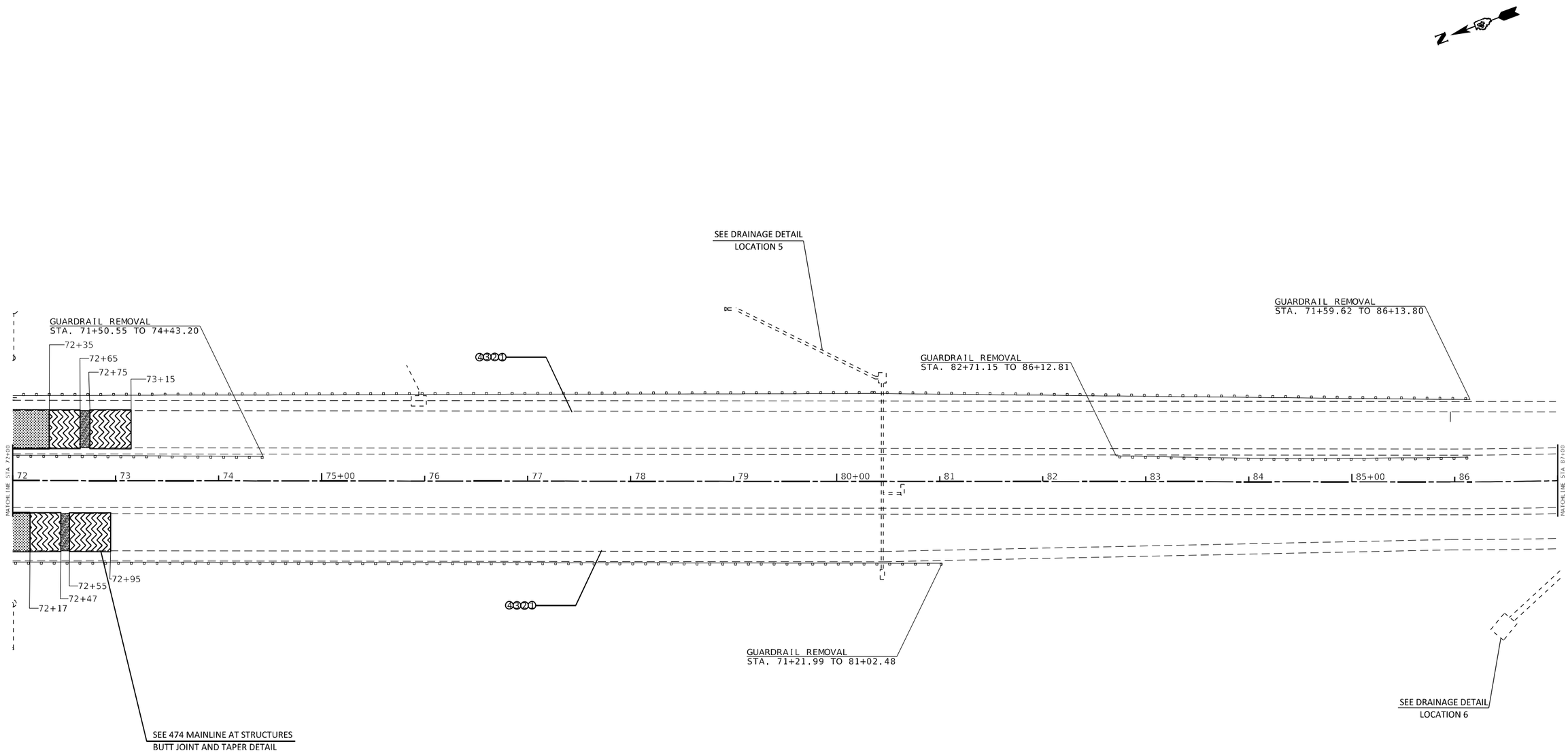

LEGEND

① HMA SURFACE REMOVAL, 4"
② POLY. SMA BINDER COURSE IL 12.5 N80, 2"
③ POLY. LEVELING BINDER COURSE (MACHINE METHOD) IL 4.75 N50, 1"
④ POLY. SMA SURFACE COURSE, MIX "E," IL 12.5 N80, 2"

SEE TYPICALS AND SCHEDULE OF QUANTITIES FOR SHOULDER TRERATMENT.
SEE TYPICALS AND SCHEDULE OF QUANTITIES FOR RAMPS TRERATMENT.

- HMA SURFACE REMOVAL BUTT JOINT
- HMA SURFACE REMOVAL, VARIABLE DEPTH
- HMA SURFACE REMOVAL, 3"
- EXPANSION JOINT
- HMA SURFACE REMOVAL 2", 2" SMA SURFACE

0 50 100
SCALE IN FEET

MODEL: $MODEL$NAME$
FILE NAME: $FILEL$

USER NAME = $USER$	DESIGNED -	REVISED -	
	DRAWN -	REVISED -	
PLOT SCALE = $SCALE$	CHECKED -	REVISED -	
PLOT DATE = $DATE$	DATE -	REVISED -	

STATE OF ILLINOIS
DEPARTMENT OF TRANSPORTATION

PROPOSED AND REMOVAL SHEETS

SCALE: | SHEET OF SHEETS | STA. TO STA.

F.A.I. RTE.	SECTION	COUNTY	TOTAL SHEETS	SHEET NO.
474	72-(1)RS-3;(2,3,4)RS-2	PEORIA	240	72
		CONTRACT NO. 68C45		
	ILLINOIS	FED. AID PROJECT		

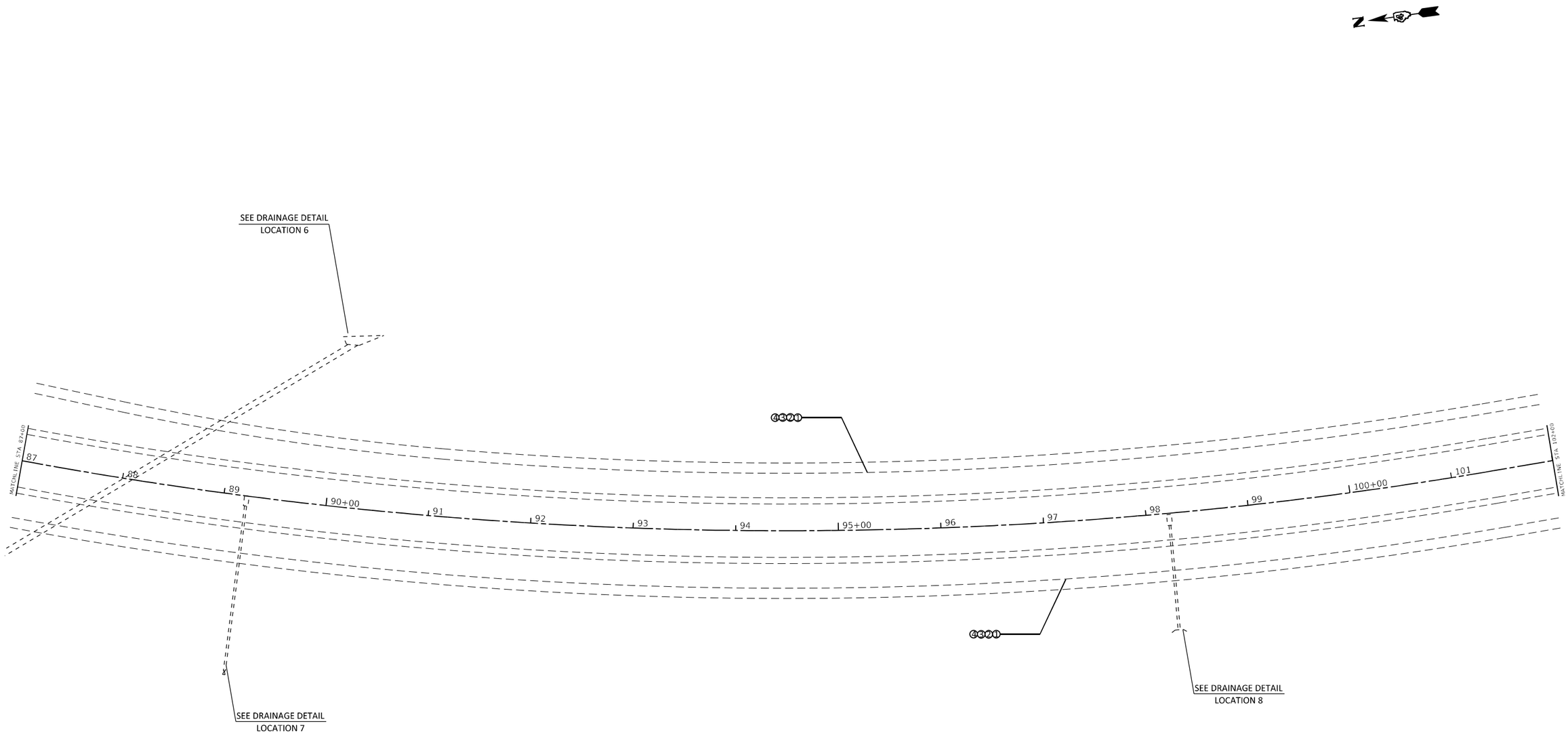

LEGEND

1. HMA SURFACE REMOVAL, 4"
2. POLY. SMA BINDER COURSE IL 12.5 N80, 2"
3. POLY. LEVELING BINDER COURSE (MACHINE METHOD) IL 4.75 N50, 1"
4. POLY. SMA SURFACE COURSE, MIX "E," IL 12.5 N80, 2"

SEE TYPICALS AND SCHEDULE OF QUANTITIES FOR SHOULDER TRERATMENT.
SEE TYPICALS AND SCHEDULE OF QUANTITIES FOR RAMPS TRERATMENT.

- HMA SURFACE REMOVAL BUTT JOINT
- HMA SURFACE REMOVAL, VARIABLE DEPTH
- HMA SURFACE REMOVAL, 3"
- EXPANSION JOINT
- HMA SURFACE REMOVAL 2", 2" SMA SURFACE

0 50 100
SCALE IN FEET

MODEL: $MODELNAME$
FILE NAME: $FILEL$

USER NAME = $USER$	DESIGNED -	REVISED -	
	DRAWN -	REVISED -	
PLOT SCALE = $SCALE$	CHECKED -	REVISED -	
PLOT DATE = $DATE$	DATE -	REVISED -	

STATE OF ILLINOIS
DEPARTMENT OF TRANSPORTATION

PROPOSED AND REMOVAL SHEETS

SCALE: | SHEET OF SHEETS | STA. TO STA.

F.A.I. RTE.	SECTION	COUNTY	TOTAL SHEETS	SHEET NO.
474	72-(1)RS-3;(2,3,4)RS-2	PEORIA	240	73
		CONTRACT NO. 68C45		
	ILLINOIS	FED. AID PROJECT		

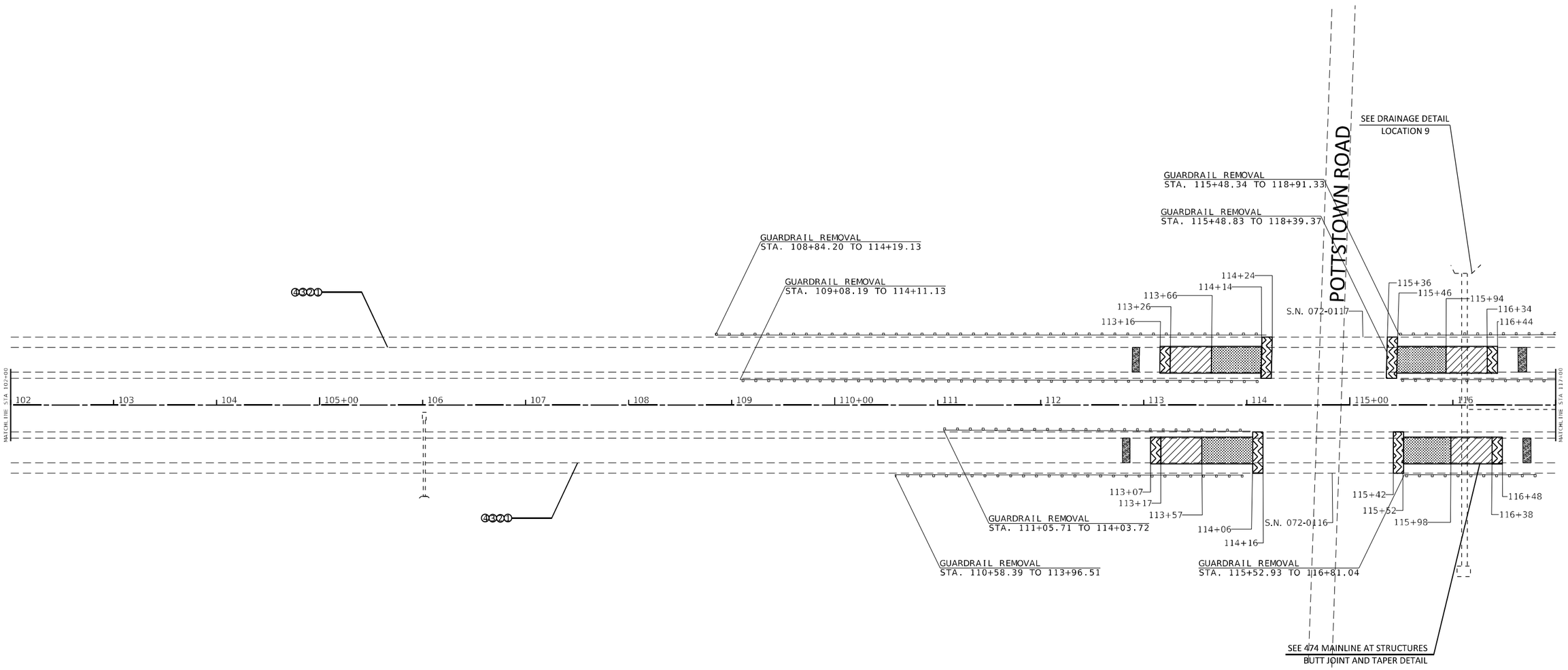

LEGEND

① HMA SURFACE REMOVAL, 4"
② POLY. SMA BINDER COURSE IL 12.5 N80, 2"
③ POLY. LEVELING BINDER COURSE (MACHINE METHOD) IL 4.75 N50, 1"
④ POLY. SMA SURFACE COURSE, MIX "E," IL 12.5 N80, 2"

SEE TYPICALS AND SCHEDULE OF QUANTITIES FOR SHOULDER TRERATMENT.
SEE TYPICALS AND SCHEDULE OF QUANTITIES FOR RAMPS TRERATMENT.

- HMA SURFACE REMOVAL BUTT JOINT
- HMA SURFACE REMOVAL, VARIABLE DEPTH
- HMA SURFACE REMOVAL, 3"
- EXPANSION JOINT
- HMA SURFACE REMOVAL 2", 2" SMA SURFACE

0 50 100
SCALE IN FEET

MODEL: $MODELNAME$
FILE NAME: $FILEL$

USER NAME = $USER$	DESIGNED -	REVISED -	
	DRAWN -	REVISED -	
PLOT SCALE = $SCALE$	CHECKED -	REVISED -	
PLOT DATE = $DATE$	DATE -	REVISED -	

STATE OF ILLINOIS
DEPARTMENT OF TRANSPORTATION

PROPOSED AND REMOVAL SHEETS

SCALE: SHEET OF SHEETS STA. TO STA.

F.A.I. RTE.	SECTION	COUNTY	TOTAL SHEETS	SHEET NO.
474	72-(1)RS-3;(2,3,4)RS-2		240	74
		CONTRACT NO. 68C45		
		ILLINOIS FED. AID PROJECT		

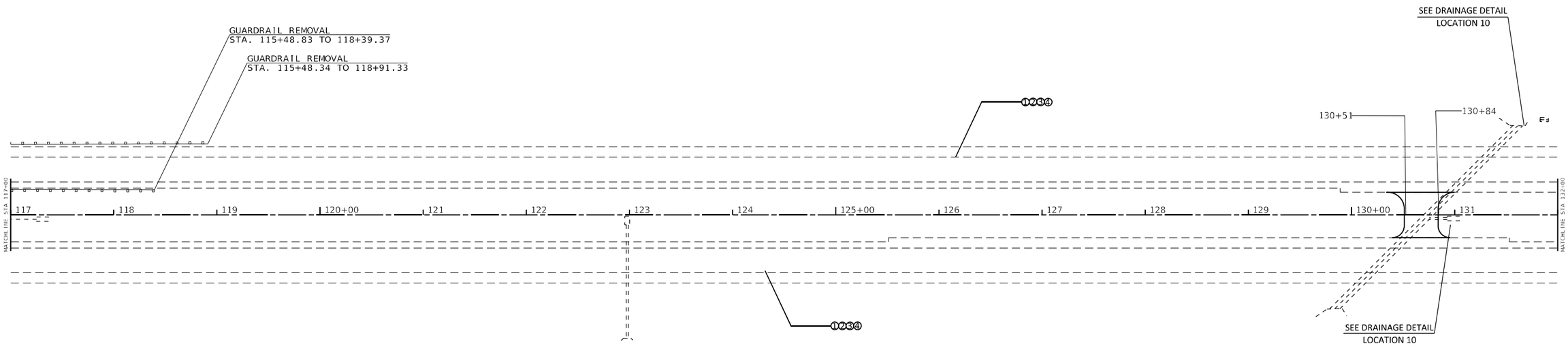

LEGEND

① HMA SURFACE REMOVAL, 4"
② POLY. SMA BINDER COURSE IL 12.5 N80, 2"
③ POLY. LEVELING BINDER COURSE (MACHINE METHOD) IL 4.75 N50, 1"
④ POLY. SMA SURFACE COURSE, MIX "E," IL 12.5 N80, 2"

SEE TYPICALS AND SCHEDULE OF QUANTITIES FOR SHOULDER TRERATMENT.
SEE TYPICALS AND SCHEDULE OF QUANTITIES FOR RAMPS TRERATMENT.

HMA SURFACE REMOVAL BUTT JOINT

HMA SURFACE REMOVAL, VARIABLE DEPTH

HMA SURFACE REMOVAL, 3"

EXPANSION JOINT

HMA SURFACE REMOVAL 2", 2" SMA SURFACE

0 50 100
SCALE IN FEET

MODEL: $MODELNAME$
FILE NAME: $FILEL$

USER NAME = $USER$	DESIGNED -	REVISED -	
	DRAWN -	REVISED -	
PLOT SCALE = $SCALE$	CHECKED -	REVISED -	
PLOT DATE = $DATE$	DATE -	REVISED -	

STATE OF ILLINOIS
DEPARTMENT OF TRANSPORTATION

PROPOSED AND REMOVAL SHEETS

SCALE: SHEET OF SHEETS STA. TO STA.

F.A.I. RTE.	SECTION	COUNTY	TOTAL SHEETS	SHEET NO.
474	72-(1)RS-3;(2,3,4)RS-2	PEORIA	240	75
		CONTRACT NO. 68C45		
	ILLINOIS	FED. AID PROJECT		

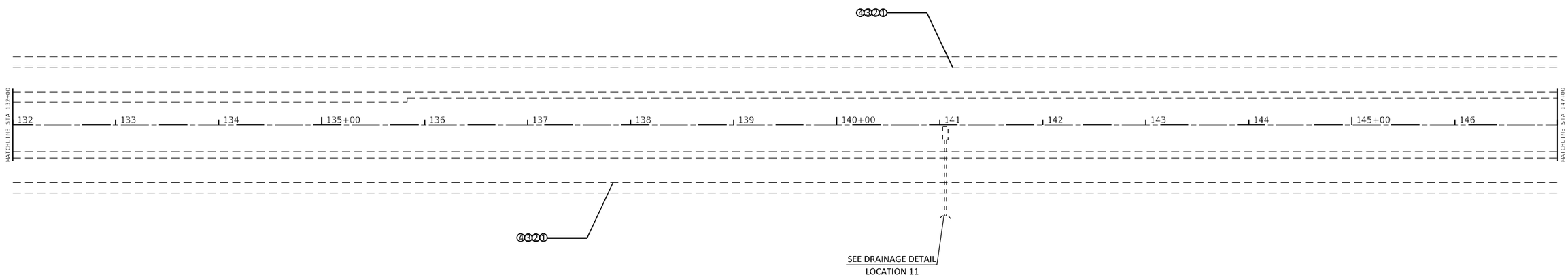

LEGEND

1. HMA SURFACE REMOVAL, 4"
2. POLY. SMA BINDER COURSE IL 12.5 N80, 2"
3. POLY. LEVELING BINDER COURSE (MACHINE METHOD) IL 4.75 N50, 1"
4. POLY. SMA SURFACE COURSE, MIX "E," IL 12.5 N80, 2"

SEE TYPICALS AND SCHEDULE OF QUANTITIES FOR SHOULDER TRERATMENT.
SEE TYPICALS AND SCHEDULE OF QUANTITIES FOR RAMPS TRERATMENT.

- HMA SURFACE REMOVAL BUTT JOINT
- HMA SURFACE REMOVAL, VARIABLE DEPTH
- HMA SURFACE REMOVAL, 3"
- EXPANSION JOINT
- HMA SURFACE REMOVAL 2", 2" SMA SURFACE

0 50 100
SCALE IN FEET

MODEL: $MODELNAME$
FILE NAME: $FILE$

USER NAME = $USER$	DESIGNED -	REVISED -
	DRAWN -	REVISED -
PLOT SCALE = $SCALE$	CHECKED -	REVISED -
PLOT DATE = $DATE$	DATE -	REVISED -

STATE OF ILLINOIS
DEPARTMENT OF TRANSPORTATION

PROPOSED AND REMOVAL SHEETS

SCALE: | SHEET OF SHEETS | STA. TO STA.

F.A.I. RTE.	SECTION	COUNTY	TOTAL SHEETS	SHEET NO.
474	72-(1)RS-3;(2,3,4)RS-2	PEORIA	240	76
		CONTRACT NO. 68C45		
		ILLINOIS FED. AID PROJECT		

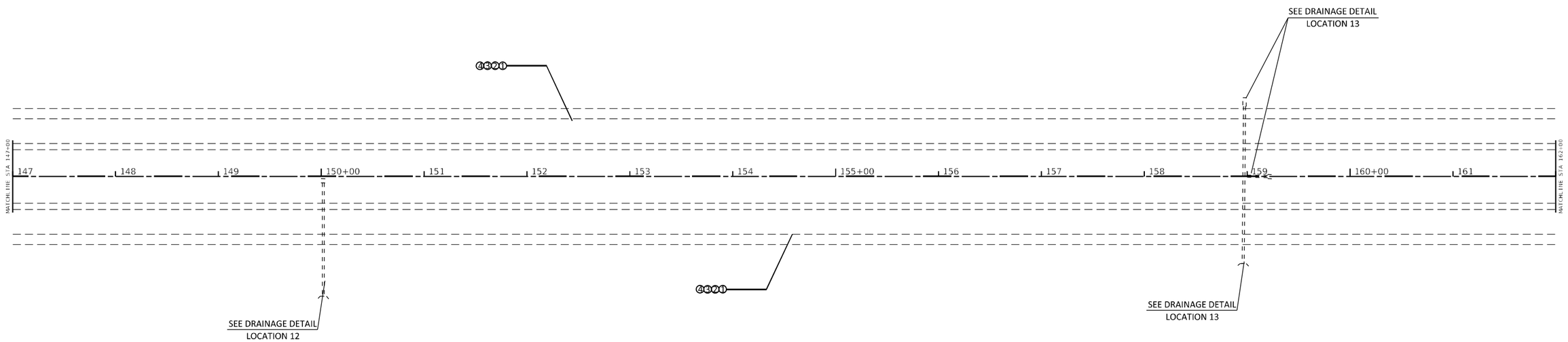

LEGEND

① HMA SURFACE REMOVAL, 4"
② POLY. SMA BINDER COURSE IL 12.5 N80, 2"
③ POLY. LEVELING BINDER COURSE (MACHINE METHOD) IL 4.75 N50, 1"
④ POLY. SMA SURFACE COURSE, MIX "E," IL 12.5 N80, 2"

SEE TYPICALS AND SCHEDULE OF QUANTITIES FOR SHOULDER TRERATMENT.
SEE TYPICALS AND SCHEDULE OF QUANTITIES FOR RAMPS TRERATMENT.

HMA SURFACE REMOVAL BUTT JOINT

HMA SURFACE REMOVAL, VARIABLE DEPTH

HMA SURFACE REMOVAL, 3"

EXPANSION JOINT

HMA SURFACE REMOVAL 2", 2" SMA SURFACE

0 50 100
SCALE IN FEET

MODEL: $MODELNAME$
FILE NAME: $FILEL$

USER NAME = $USER$	DESIGNED -	REVISED -	
	DRAWN -	REVISED -	
PLOT SCALE = $SCALE$	CHECKED -	REVISED -	
PLOT DATE = $DATE$	DATE -	REVISED -	

STATE OF ILLINOIS
DEPARTMENT OF TRANSPORTATION

PROPOSED AND REMOVAL SHEETS

SCALE: | SHEET OF SHEETS | STA. TO STA.

F.A.I. RTE.	SECTION	COUNTY	TOTAL SHEETS	SHEET NO.
474	72-(1)RS-3;(2,3,4)RS-2	PEORIA	240	77
		CONTRACT NO. 68C45		
	ILLINOIS	FED. AID PROJECT		

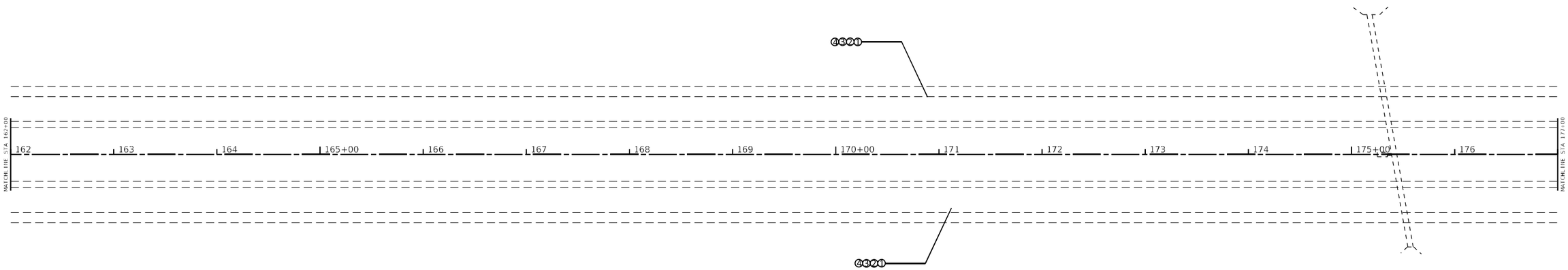

LEGEND

1. HMA SURFACE REMOVAL, 4"
2. POLY. SMA BINDER COURSE IL 12.5 N80, 2"
3. POLY. LEVELING BINDER COURSE (MACHINE METHOD) IL 4.75 N50, 1"
4. POLY. SMA SURFACE COURSE, MIX "E," IL 12.5 N80, 2"

SEE TYPICALS AND SCHEDULE OF QUANTITIES FOR SHOULDER TRERATMENT.
SEE TYPICALS AND SCHEDULE OF QUANTITIES FOR RAMPS TRERATMENT.

- HMA SURFACE REMOVAL BUTT JOINT
- HMA SURFACE REMOVAL, VARIABLE DEPTH
- HMA SURFACE REMOVAL, 3"
- EXPANSION JOINT
- HMA SURFACE REMOVAL 2", 2" SMA SURFACE

0 50 100
SCALE IN FEET

MODEL: $MODELNAME$
FILE NAME: $FILEL$

USER NAME = $USER$	DESIGNED -	REVISED -
	DRAWN -	REVISED -
PLOT SCALE = $SCALE$	CHECKED -	REVISED -
PLOT DATE = $DATE$	DATE -	REVISED -

STATE OF ILLINOIS
DEPARTMENT OF TRANSPORTATION

PROPOSED AND REMOVAL SHEETS

SCALE: | SHEET OF SHEETS | STA. TO STA.

F.A.I. RTE.	SECTION	COUNTY	TOTAL SHEETS	SHEET NO.
474	72-(1)RS-3;(2,3,4)RS-2	PEORIA	240	78
		CONTRACT NO. 68C45		
		ILLINOIS FED. AID PROJECT		

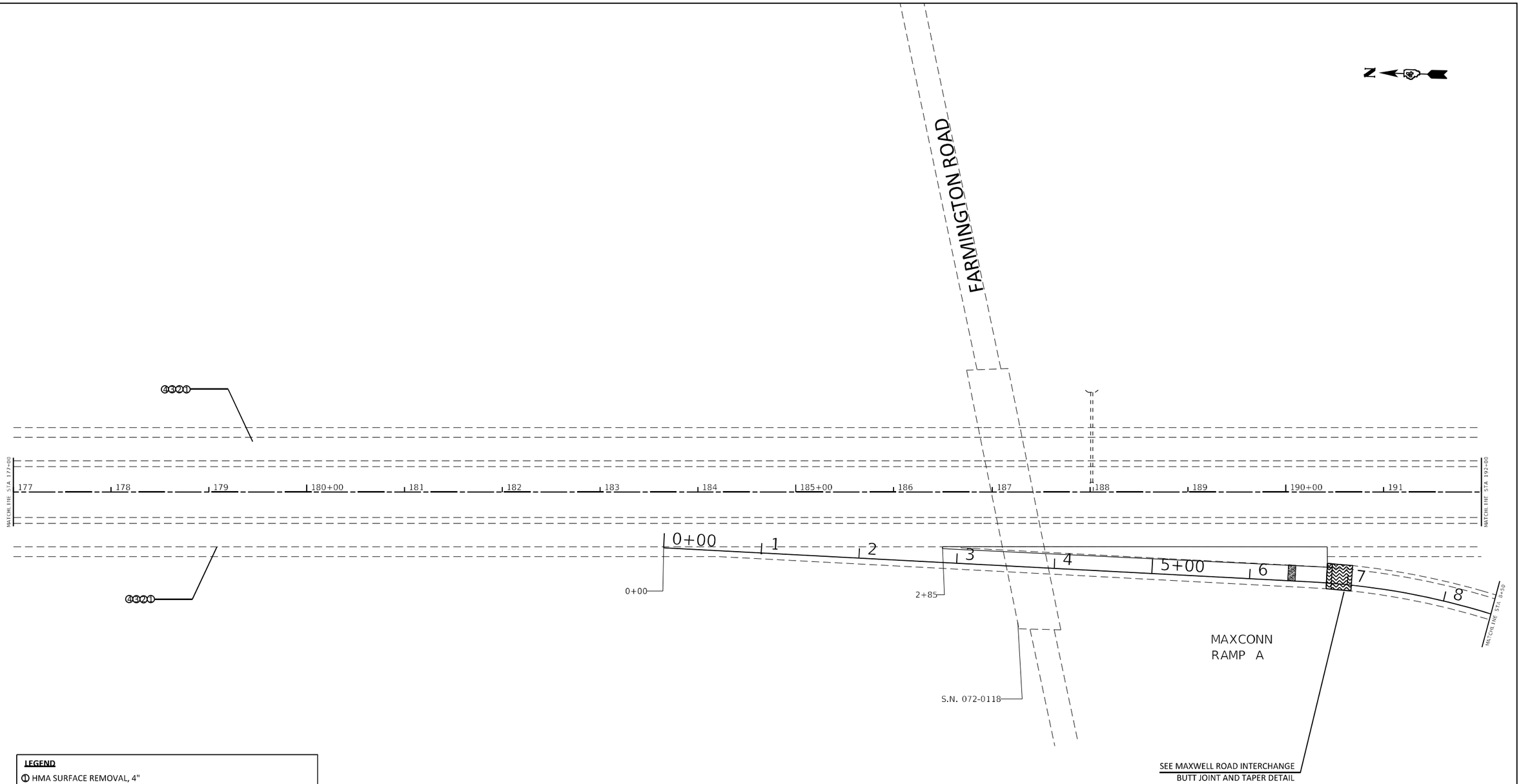

LEGEND

1. HMA SURFACE REMOVAL, 4"
2. POLY. SMA BINDER COURSE IL 12.5 N80, 2"
3. POLY. LEVELING BINDER COURSE (MACHINE METHOD) IL 4.75 N50, 1"
4. POLY. SMA SURFACE COURSE, MIX "E," IL 12.5 N80, 2"

SEE TYPICALS AND SCHEDULE OF QUANTITIES FOR SHOULDER TRERATMENT.
SEE TYPICALS AND SCHEDULE OF QUANTITIES FOR RAMPS TRERATMENT.

- HMA SURFACE REMOVAL BUTT JOINT
- HMA SURFACE REMOVAL, VARIABLE DEPTH
- HMA SURFACE REMOVAL, 3"
- EXPANSION JOINT
- HMA SURFACE REMOVAL 2", 2" SMA SURFACE

0 50 100
SCALE IN FEET

MODEL: $MODELNAME$
FILE NAME: $FILEL$

USER NAME = $USER$	DESIGNED -	REVISED -
	DRAWN -	REVISED -
PLOT SCALE = $SCALE$	CHECKED -	REVISED -
PLOT DATE = $DATE$	DATE -	REVISED -

STATE OF ILLINOIS
DEPARTMENT OF TRANSPORTATION

PROPOSED AND REMOVAL SHEETS

SCALE: | SHEET OF SHEETS | STA. TO STA.

F.A.I. RTE.	SECTION	COUNTY	TOTAL SHEETS	SHEET NO.
474	72-(1)RS-3;(2,3,4)RS-2	PEORIA	240	79
		CONTRACT NO. 68C45		
		ILLINOIS FED. AID PROJECT		

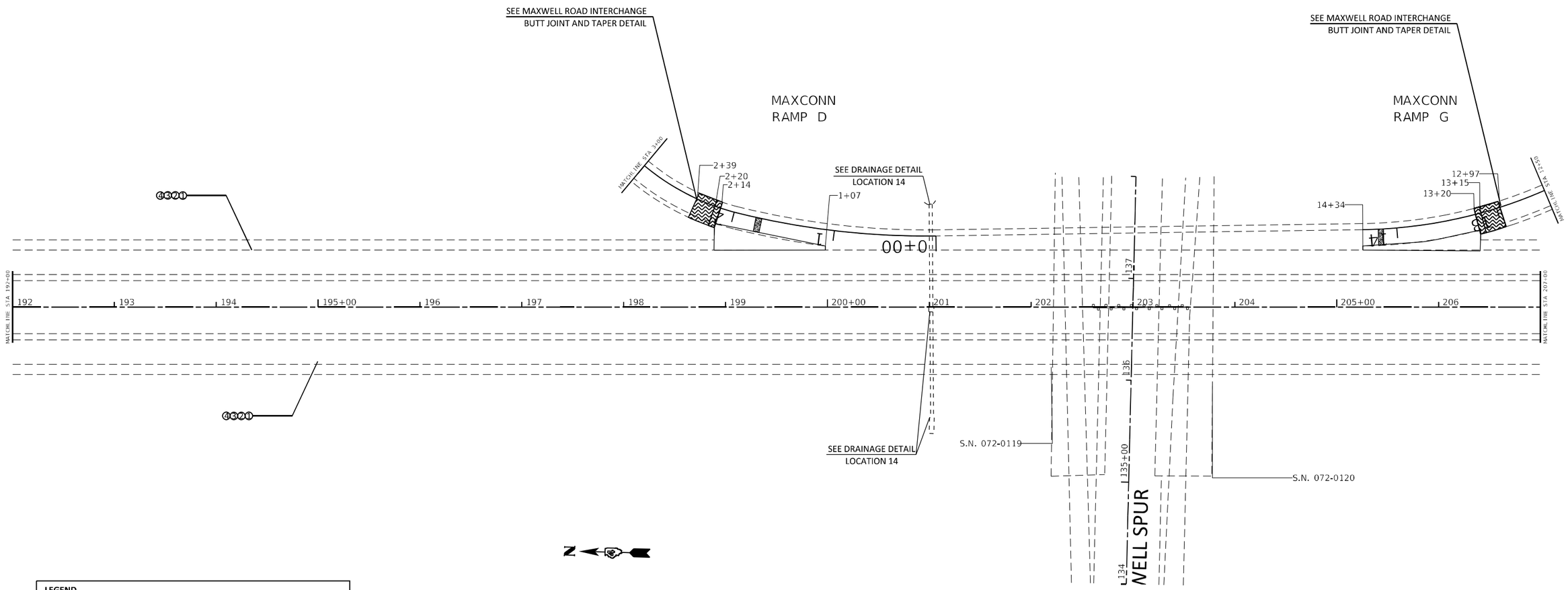

LEGEND

1. HMA SURFACE REMOVAL, 4"
2. POLY. SMA BINDER COURSE IL 12.5 N80, 2"
3. POLY. LEVELING BINDER COURSE (MACHINE METHOD) IL 4.75 N50, 1"
4. POLY. SMA SURFACE COURSE, MIX "E," IL 12.5 N80, 2"

SEE TYPICALS AND SCHEDULE OF QUANTITIES FOR SHOULDER TRERATMENT.
SEE TYPICALS AND SCHEDULE OF QUANTITIES FOR RAMPS TRERATMENT.

- HMA SURFACE REMOVAL BUTT JOINT
- HMA SURFACE REMOVAL, VARIABLE DEPTH
- HMA SURFACE REMOVAL, 3"
- EXPANSION JOINT
- HMA SURFACE REMOVAL 2", 2" SMA SURFACE

0 50 100
SCALE IN FEET

MODEL: $MODELNAME$
FILE NAME: $FILE$

USER NAME = $USER$	DESIGNED -	REVISED -
	DRAWN -	REVISED -
PLOT SCALE = $SCALE$	CHECKED -	REVISED -
PLOT DATE = $DATE$	DATE -	REVISED -

STATE OF ILLINOIS
DEPARTMENT OF TRANSPORTATION

PROPOSED AND REMOVAL SHEETS

SCALE: | SHEET OF SHEETS | STA. TO STA.

F.A.I. RTE.	SECTION	COUNTY	TOTAL SHEETS	SHEET NO.
474	72-(1)RS-3;(2,3,4)RS-2	PEORIA	240	80

CONTRACT NO. 68C45

ILLINOIS | FED. AID PROJECT

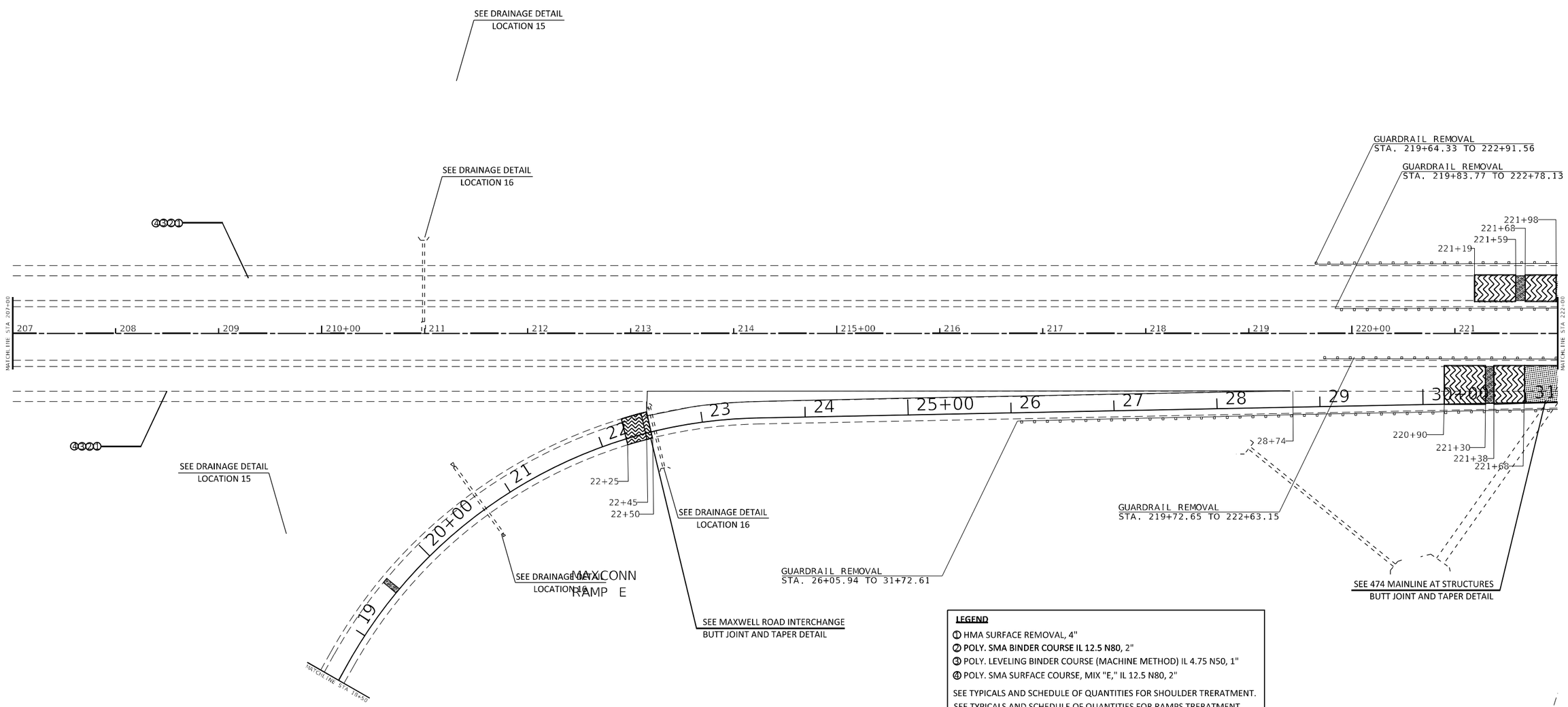

MODEL: $MODEL$NAME
FILE NAME: $FILE$

USER NAME = $USER$	DESIGNED -	REVISED -	
	DRAWN -	REVISED -	
PLOT SCALE = $SCALE$	CHECKED -	REVISED -	
PLOT DATE = $DATE$	DATE -	REVISED -	

STATE OF ILLINOIS
DEPARTMENT OF TRANSPORTATION

PROPOSED AND REMOVAL SHEETS

SCALE: | SHEET OF SHEETS | STA. TO STA.

F.A.I. RTE.	SECTION	COUNTY	TOTAL SHEETS	SHEET NO.
474	72-(1)RS-3;(2,3,4)RS-2	PEORIA	240	81
		CONTRACT NO. 68C45		
	ILLINOIS	FED. AID PROJECT		

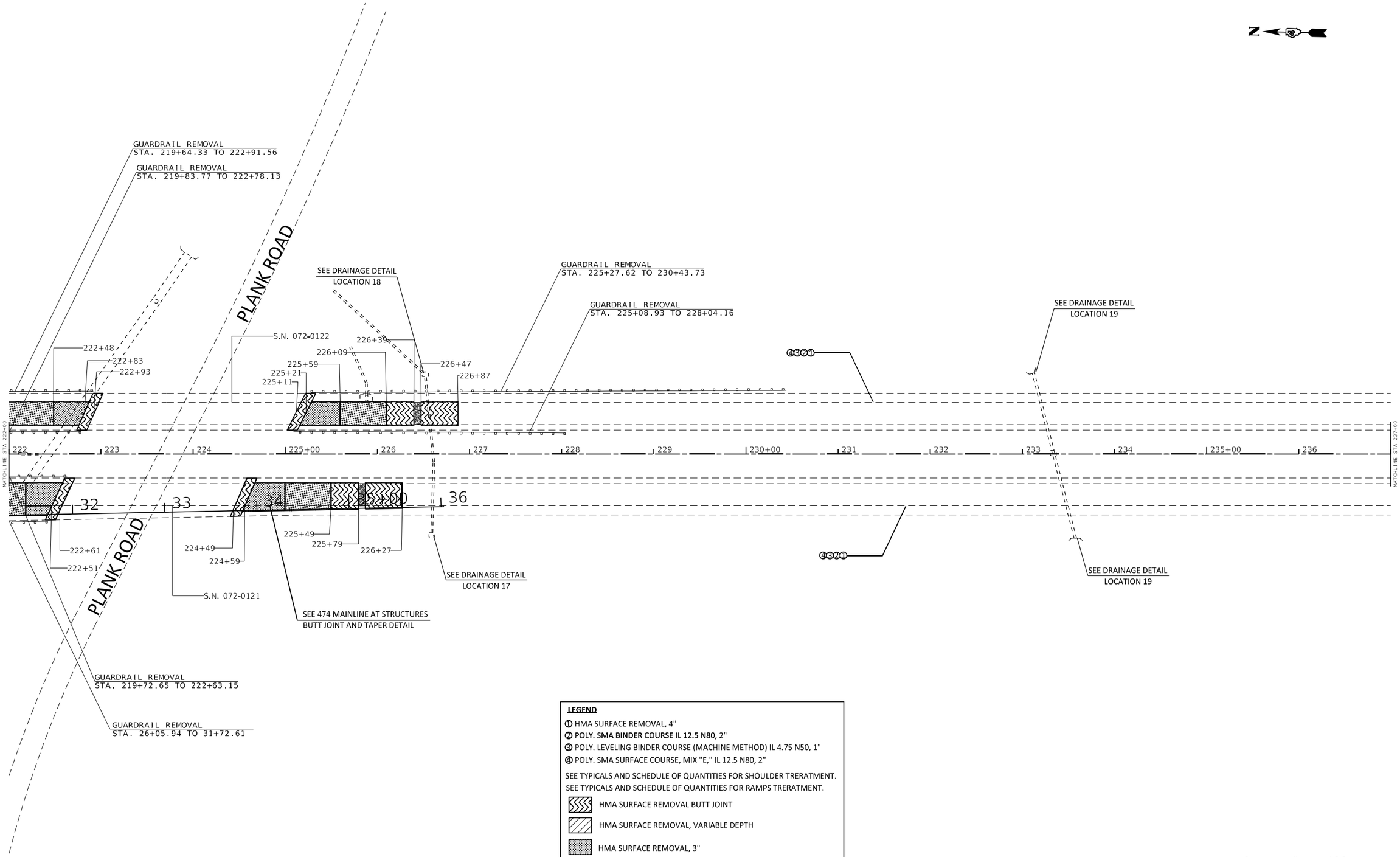

MODEL: $MODEL$NAME$
FILE NAME: $FILE$

USER NAME = $USER$	DESIGNED -	REVISED -	
	DRAWN -	REVISED -	
PLOT SCALE = $SCALE$	CHECKED -	REVISED -	
PLOT DATE = $DATE$	DATE -	REVISED -	

STATE OF ILLINOIS
DEPARTMENT OF TRANSPORTATION

PROPOSED AND REMOVAL SHEETS

SCALE: SHEET OF SHEETS STA. TO STA.

F.A.I. RTE.	SECTION	COUNTY	TOTAL SHEETS	SHEET NO.
474	72-(1)RS-3;(2,3,4)RS-2	PEORIA	240	82
		CONTRACT NO. 68C45		
	ILLINOIS	FED. AID PROJECT		

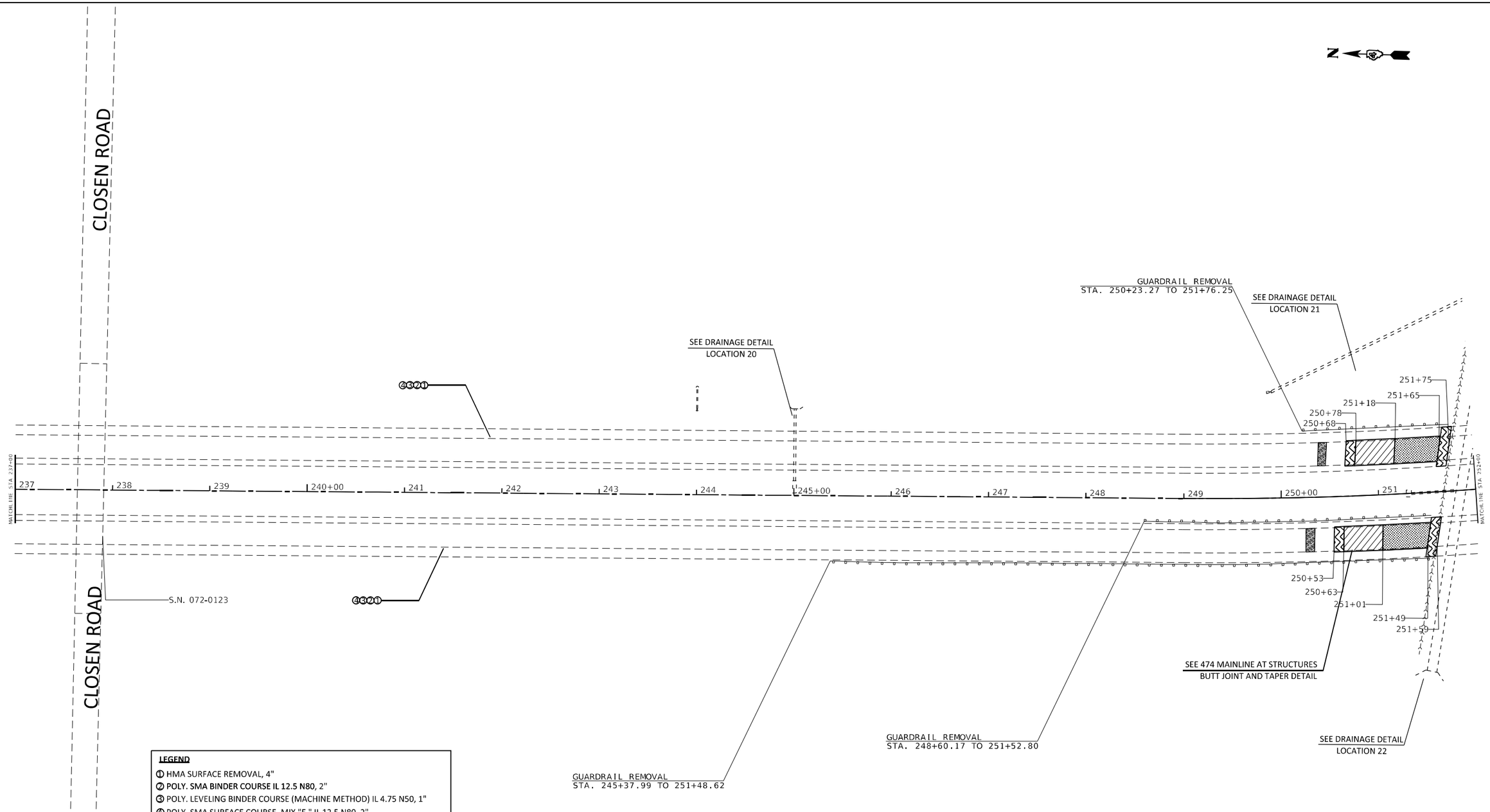

LEGEND

1. HMA SURFACE REMOVAL, 4"
2. POLY. SMA BINDER COURSE IL 12.5 N80, 2"
3. POLY. LEVELING BINDER COURSE (MACHINE METHOD) IL 4.75 N50, 1"
4. POLY. SMA SURFACE COURSE, MIX "E," IL 12.5 N80, 2"

SEE TYPICALS AND SCHEDULE OF QUANTITIES FOR SHOULDER TRERATMENT.
SEE TYPICALS AND SCHEDULE OF QUANTITIES FOR RAMPS TRERATMENT.

- HMA SURFACE REMOVAL BUTT JOINT
- HMA SURFACE REMOVAL, VARIABLE DEPTH
- HMA SURFACE REMOVAL, 3"
- EXPANSION JOINT
- HMA SURFACE REMOVAL 2", 2" SMA SURFACE

MODEL: $MODELNAME$
FILE NAME: $FILEL$

USER NAME = $USER$	DESIGNED -	REVISED -
	DRAWN -	REVISED -
PLOT SCALE = $SCALE$	CHECKED -	REVISED -
PLOT DATE = $DATE$	DATE -	REVISED -

STATE OF ILLINOIS
DEPARTMENT OF TRANSPORTATION

PROPOSED AND REMOVAL SHEETS

SCALE: | SHEET OF SHEETS | STA. TO STA.

F.A.I. RTE.	SECTION	COUNTY	TOTAL SHEETS	SHEET NO.
474	72-(1)RS-3;(2,3,4)RS-2	PEORIA	240	83
		CONTRACT NO. 68C45		
	ILLINOIS	FED. AID PROJECT		

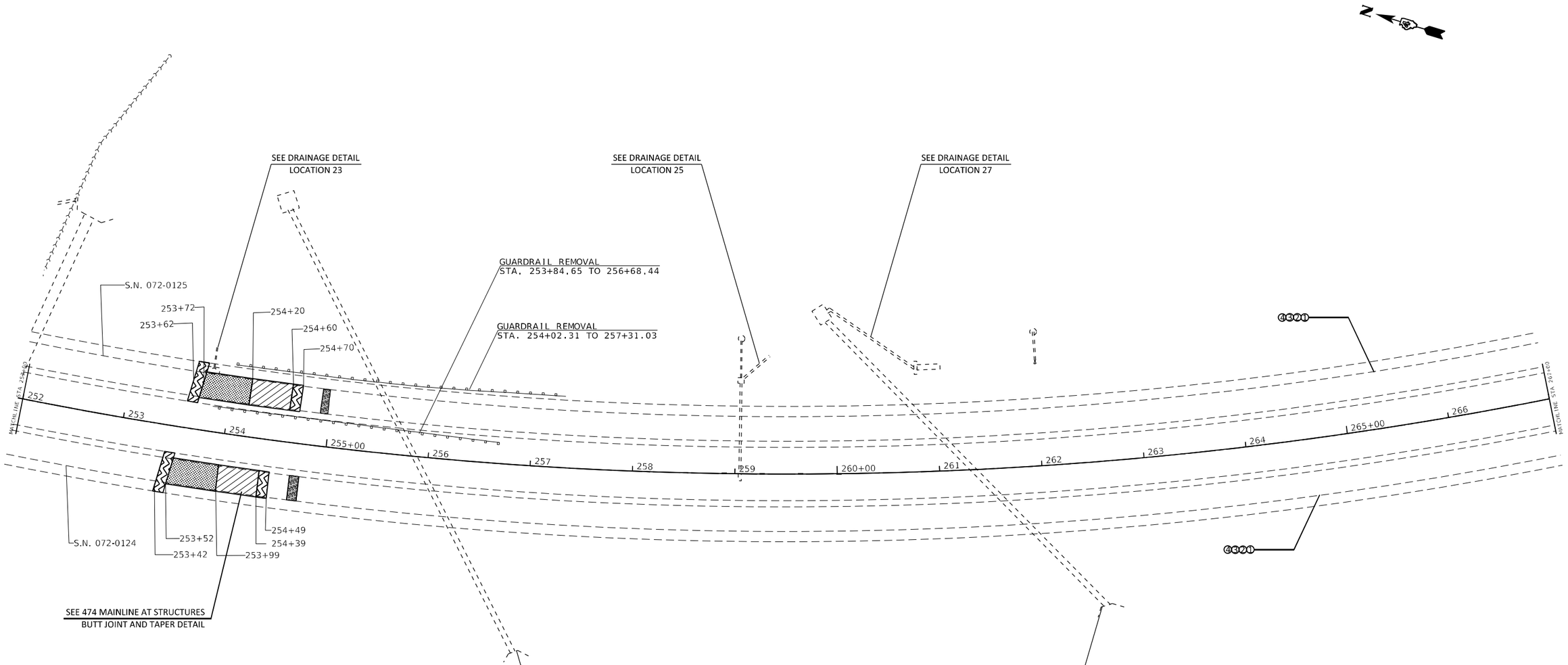

LEGEND

1. HMA SURFACE REMOVAL, 4"
2. POLY. SMA BINDER COURSE IL 12.5 N80, 2"
3. POLY. LEVELING BINDER COURSE (MACHINE METHOD) IL 4.75 N50, 1"
4. POLY. SMA SURFACE COURSE, MIX "E," IL 12.5 N80, 2"

SEE TYPICALS AND SCHEDULE OF QUANTITIES FOR SHOULDER TRERATMENT.
SEE TYPICALS AND SCHEDULE OF QUANTITIES FOR RAMPS TRERATMENT.

- HMA SURFACE REMOVAL BUTT JOINT
- HMA SURFACE REMOVAL, VARIABLE DEPTH
- HMA SURFACE REMOVAL, 3"
- EXPANSION JOINT
- HMA SURFACE REMOVAL 2", 2" SMA SURFACE

0 50 100
SCALE IN FEET

MODEL: $MODELNAME$
FILE NAME: $FILEL$

USER NAME = $USER$	DESIGNED -	REVISED -	
	DRAWN -	REVISED -	
PLOT SCALE = $SCALE$	CHECKED -	REVISED -	
PLOT DATE = $DATE$	DATE -	REVISED -	

STATE OF ILLINOIS
DEPARTMENT OF TRANSPORTATION

PROPOSED AND REMOVAL SHEETS

SCALE: | SHEET OF SHEETS | STA. TO STA.

F.A.I. RTE.	SECTION	COUNTY	TOTAL SHEETS	SHEET NO.
474	72-(1)RS-3;(2,3,4)RS-2	PEORIA	240	84

CONTRACT NO. 68C45

ILLINOIS | FED. AID PROJECT

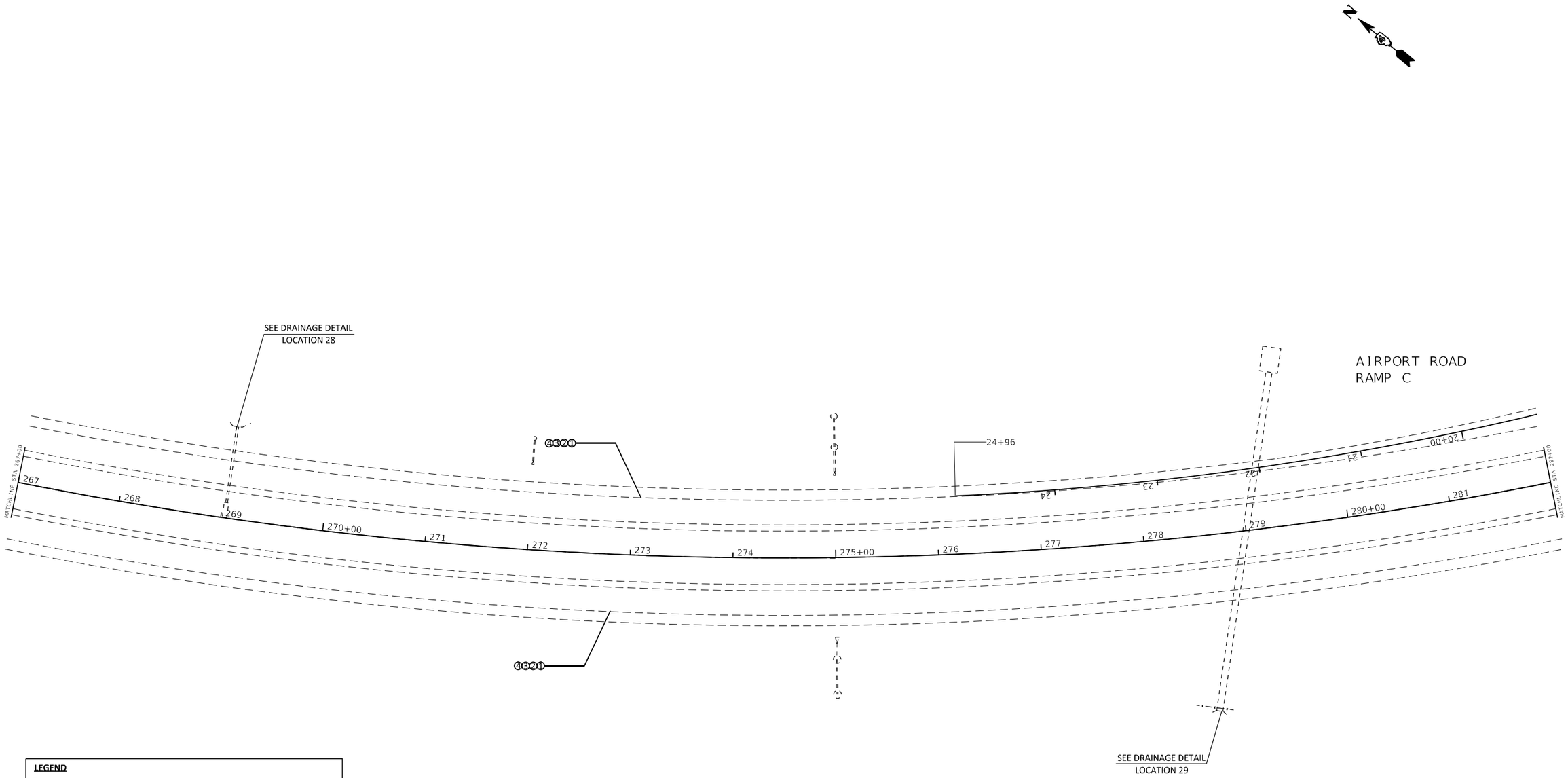

LEGEND

① HMA SURFACE REMOVAL, 4"
② POLY. SMA BINDER COURSE IL 12.5 N80, 2"
③ POLY. LEVELING BINDER COURSE (MACHINE METHOD) IL 4.75 N50, 1"
④ POLY. SMA SURFACE COURSE, MIX "E," IL 12.5 N80, 2"

SEE TYPICALS AND SCHEDULE OF QUANTITIES FOR SHOULDER TRERATMENT.
SEE TYPICALS AND SCHEDULE OF QUANTITIES FOR RAMPS TRERATMENT.

- HMA SURFACE REMOVAL BUTT JOINT
- HMA SURFACE REMOVAL, VARIABLE DEPTH
- HMA SURFACE REMOVAL, 3"
- EXPANSION JOINT
- HMA SURFACE REMOVAL 2", 2" SMA SURFACE

0 50 100
SCALE IN FEET

MODEL: $MODELNAME$
FILE NAME: $FILEL$

USER NAME = $USER$	DESIGNED -	REVISED -	
	DRAWN -	REVISED -	
PLOT SCALE = $SCALE$	CHECKED -	REVISED -	
PLOT DATE = $DATE$	DATE -	REVISED -	

STATE OF ILLINOIS
DEPARTMENT OF TRANSPORTATION

PROPOSED AND REMOVAL SHEETS

SCALE: | SHEET OF SHEETS | STA. TO STA.

F.A.I. RTE.	SECTION	COUNTY	TOTAL SHEETS	SHEET NO.
474	72-(1)RS-3;(2,3,4)RS-2	PEORIA	240	85
		CONTRACT NO. 68C45		
	ILLINOIS	FED. AID PROJECT		

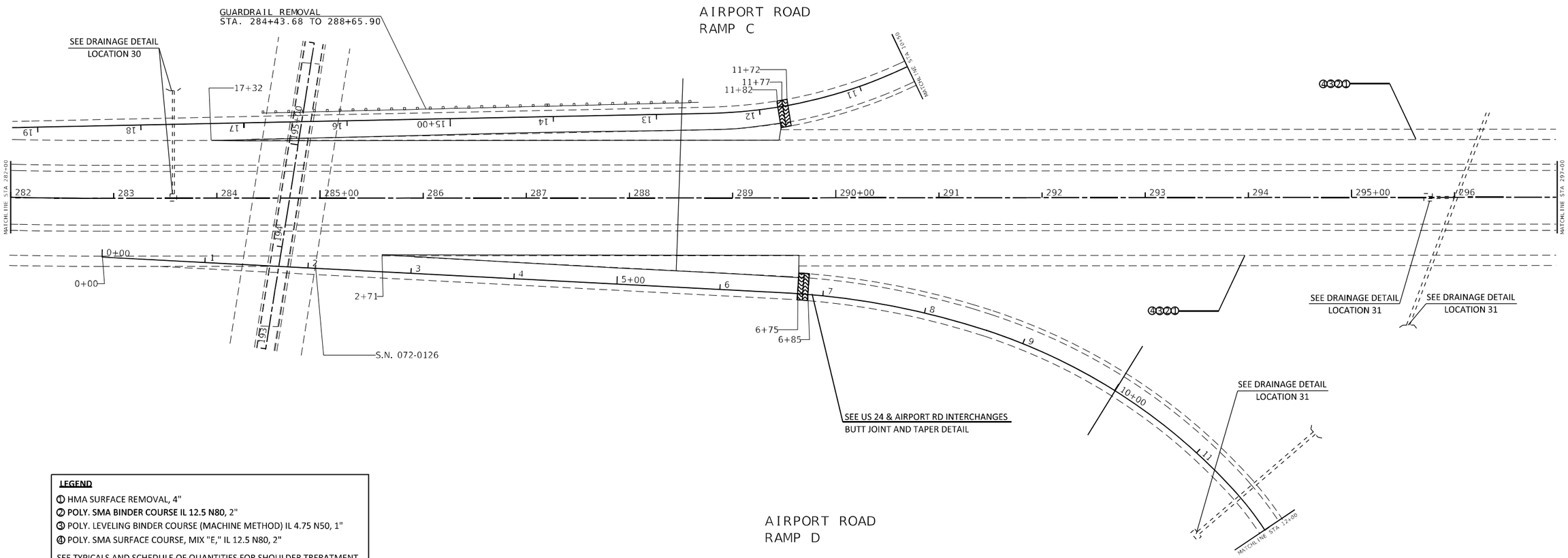

LEGEND

1. HMA SURFACE REMOVAL, 4"
2. POLY. SMA BINDER COURSE IL 12.5 N80, 2"
3. POLY. LEVELING BINDER COURSE (MACHINE METHOD) IL 4.75 N50, 1"
4. POLY. SMA SURFACE COURSE, MIX "E," IL 12.5 N80, 2"

SEE TYPICALS AND SCHEDULE OF QUANTITIES FOR SHOULDER TRERATMENT.
SEE TYPICALS AND SCHEDULE OF QUANTITIES FOR RAMPS TRERATMENT.

- HMA SURFACE REMOVAL BUTT JOINT
- HMA SURFACE REMOVAL, VARIABLE DEPTH
- HMA SURFACE REMOVAL, 3"
- EXPANSION JOINT
- HMA SURFACE REMOVAL 2", 2" SMA SURFACE

0 50 100
SCALE IN FEET

MODEL: $MODELNAME$
FILE NAME: $FILEL$

USER NAME = $USER$	DESIGNED -	REVISED -	
	DRAWN -	REVISED -	
PLOT SCALE = $SCALE$	CHECKED -	REVISED -	
PLOT DATE = $DATE$	DATE -	REVISED -	

STATE OF ILLINOIS
DEPARTMENT OF TRANSPORTATION

PROPOSED AND REMOVAL SHEETS

SCALE: | SHEET OF SHEETS | STA. TO STA.

F.A.I. RTE.	SECTION	COUNTY	TOTAL SHEETS	SHEET NO.
474	72-(1)RS-3;(2,3,4)RS-2	PEORIA	240	86
		CONTRACT NO. 68C45		
	ILLINOIS	FED. AID PROJECT		

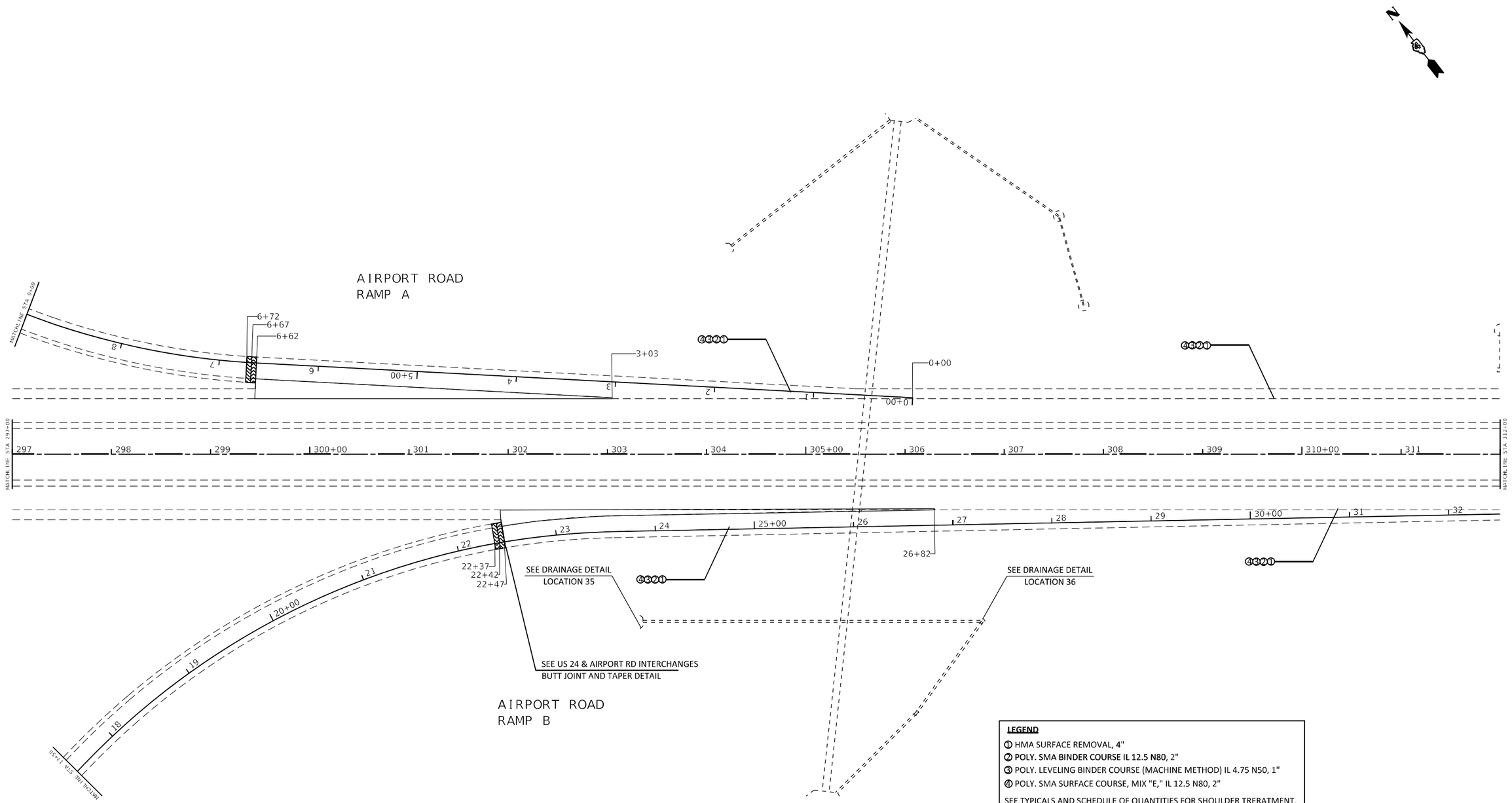

LEGEND

1. HMA SURFACE REMOVAL, 4"
2. POLY. SMA BINDER COURSE IL 12.5 N80, 2"
3. POLY. LEVELING BINDER COURSE (MACHINE METHOD) IL 4.75 N50, 1"
4. POLY. SMA SURFACE COURSE, MIX "E," IL 12.5 N80, 2"

SEE TYPICALS AND SCHEDULE OF QUANTITIES FOR SHOULDER TRERATMENT.
SEE TYPICALS AND SCHEDULE OF QUANTITIES FOR RAMPS TRERATMENT.

- HMA SURFACE REMOVAL BUTT JOINT
- HMA SURFACE REMOVAL, VARIABLE DEPTH
- HMA SURFACE REMOVAL, 3"
- EXPANSION JOINT
- HMA SURFACE REMOVAL 2", 2" SMA SURFACE

0 50 100
SCALE IN FEET

MODEL: $MODELNAME$
FILE NAME: $FILEL$

USER NAME = $USER$	DESIGNED -	REVISED -
	DRAWN -	REVISED -
PLOT SCALE = $SCALE$	CHECKED -	REVISED -
PLOT DATE = $DATE$	DATE -	REVISED -

STATE OF ILLINOIS
DEPARTMENT OF TRANSPORTATION

PROPOSED AND REMOVAL SHEETS

SCALE: | SHEET OF SHEETS | STA. TO STA.

F.A.I. RTE.	SECTION	COUNTY	TOTAL SHEETS	SHEET NO.
474	72-(1)RS-3;(2,3,4)RS-2	PEORIA	240	87

CONTRACT NO. 68C45

ILLINOIS | FED. AID PROJECT

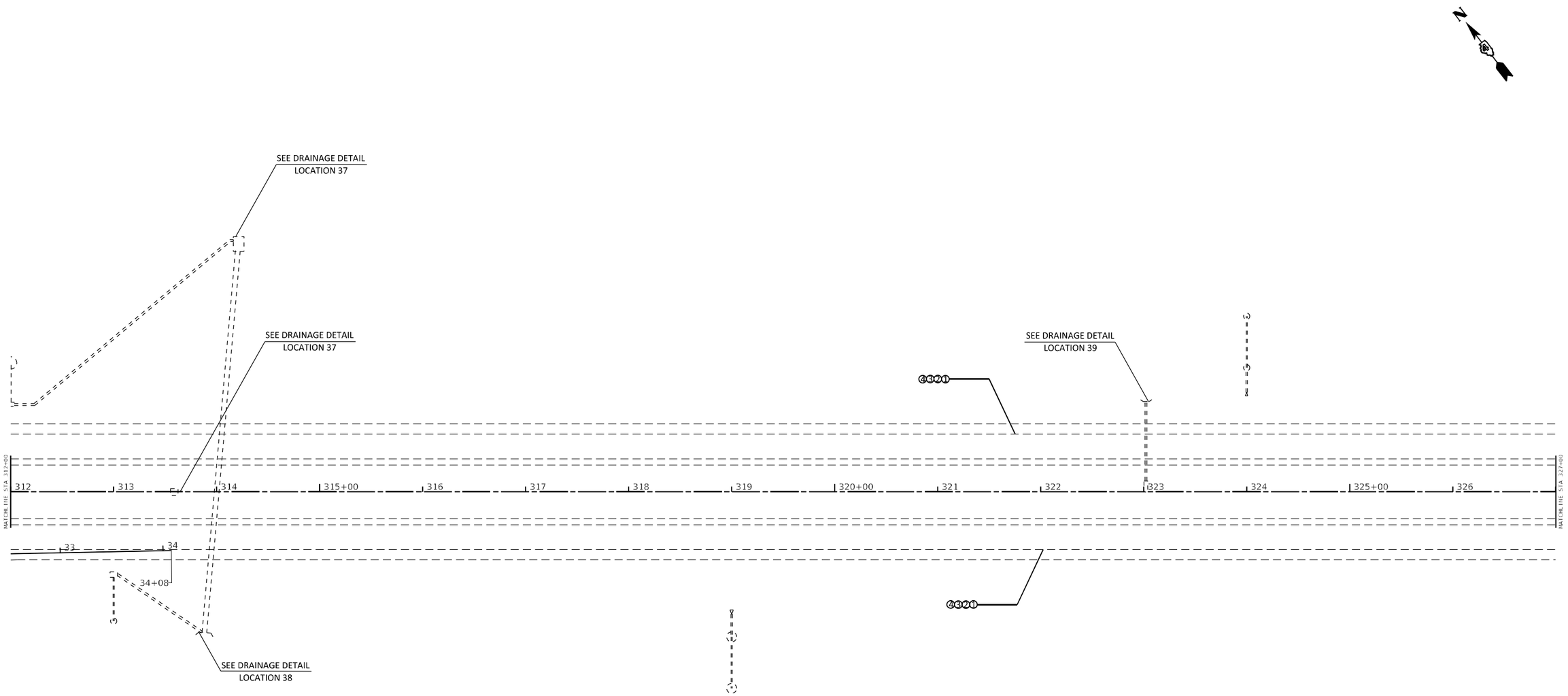

LEGEND

① HMA SURFACE REMOVAL, 4"
② POLY. SMA BINDER COURSE IL 12.5 N80, 2"
③ POLY. LEVELING BINDER COURSE (MACHINE METHOD) IL 4.75 N50, 1"
④ POLY. SMA SURFACE COURSE, MIX "E," IL 12.5 N80, 2"

SEE TYPICALS AND SCHEDULE OF QUANTITIES FOR SHOULDER TRERATMENT.
SEE TYPICALS AND SCHEDULE OF QUANTITIES FOR RAMPS TRERATMENT.

- HMA SURFACE REMOVAL BUTT JOINT
- HMA SURFACE REMOVAL, VARIABLE DEPTH
- HMA SURFACE REMOVAL, 3"
- EXPANSION JOINT
- HMA SURFACE REMOVAL 2", 2" SMA SURFACE

0 50 100
SCALE IN FEET

MODEL: $MODELNAME$
FILE NAME: $FILEL$

USER NAME = $USER$	DESIGNED -	REVISED -	
	DRAWN -	REVISED -	
PLOT SCALE = $SCALE$	CHECKED -	REVISED -	
PLOT DATE = $DATE$	DATE -	REVISED -	

STATE OF ILLINOIS
DEPARTMENT OF TRANSPORTATION

PROPOSED AND REMOVAL SHEETS

SCALE: | SHEET OF SHEETS | STA. TO STA.

F.A.I. RTE.	SECTION	COUNTY	TOTAL SHEETS	SHEET NO.
474	72-(1)RS-3;(2,3,4)RS-2	PEORIA	240	88

CONTRACT NO. 68C45

ILLINOIS | FED. AID PROJECT

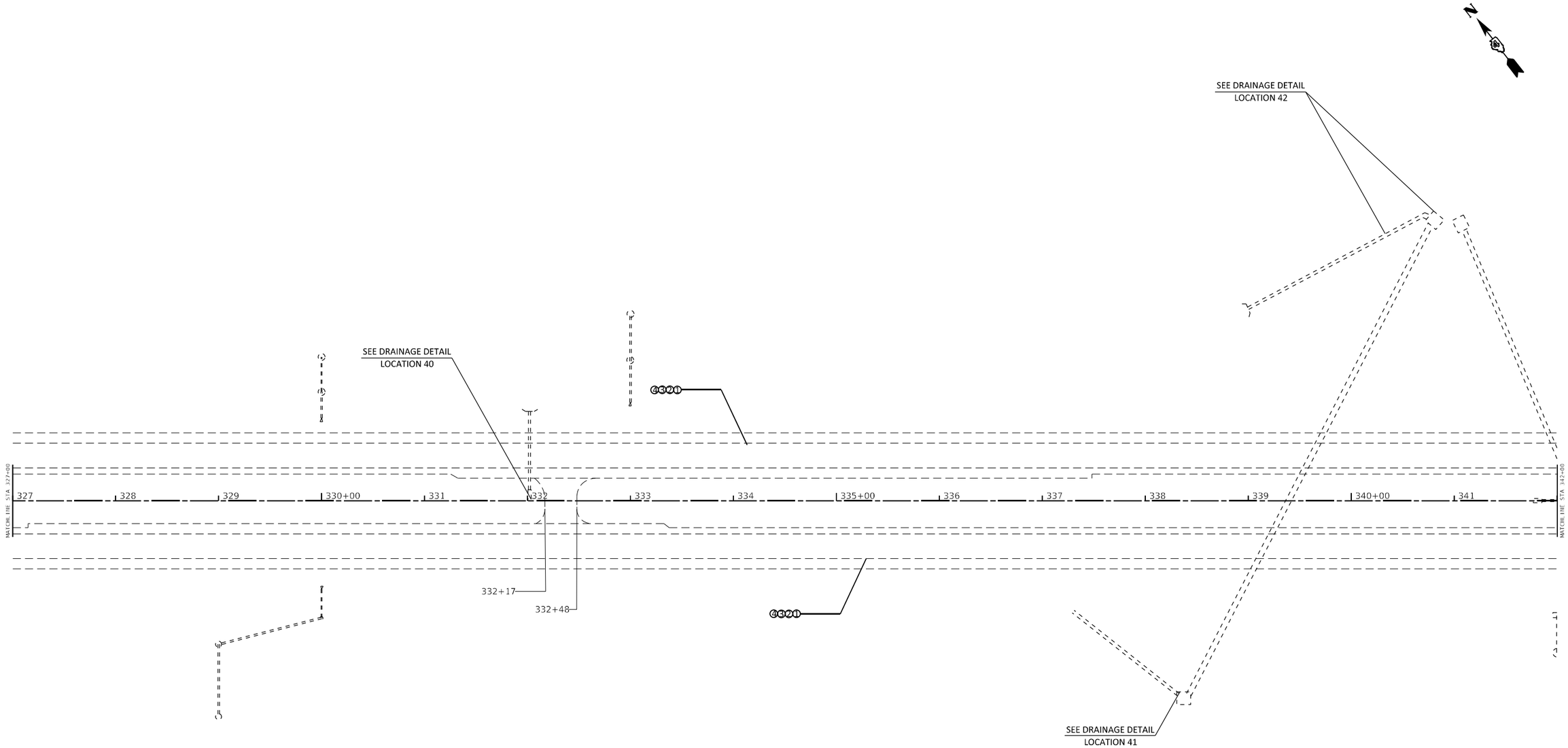

LEGEND

1. HMA SURFACE REMOVAL, 4"
2. **POLY. SMA BINDER COURSE IL 12.5 N80**, 2"
3. POLY. LEVELING BINDER COURSE (MACHINE METHOD) IL 4.75 N50, 1"
4. POLY. SMA SURFACE COURSE, MIX "E," IL 12.5 N80, 2"

SEE TYPICALS AND SCHEDULE OF QUANTITIES FOR SHOULDER TRERATMENT.
SEE TYPICALS AND SCHEDULE OF QUANTITIES FOR RAMPS TRERATMENT.

- HMA SURFACE REMOVAL BUTT JOINT
- HMA SURFACE REMOVAL, VARIABLE DEPTH
- HMA SURFACE REMOVAL, 3"
- EXPANSION JOINT
- HMA SURFACE REMOVAL 2", 2" SMA SURFACE

0 50 100
SCALE IN FEET

MODEL: $MODELNAME$
FILE NAME: $FILEL$

USER NAME = $USER$	DESIGNED -	REVISED -	
	DRAWN -	REVISED -	
PLOT SCALE = $SCALE$	CHECKED -	REVISED -	
PLOT DATE = $DATE$	DATE -	REVISED -	

STATE OF ILLINOIS
DEPARTMENT OF TRANSPORTATION

PROPOSED AND REMOVAL SHEETS

SCALE: | SHEET OF SHEETS | STA. TO STA.

F.A.I. RTE.	SECTION	COUNTY	TOTAL SHEETS	SHEET NO.
474	72-(1)RS-3;(2,3,4)RS-2	PEORIA	240	89
		CONTRACT NO. 68C45		
		ILLINOIS FED. AID PROJECT		

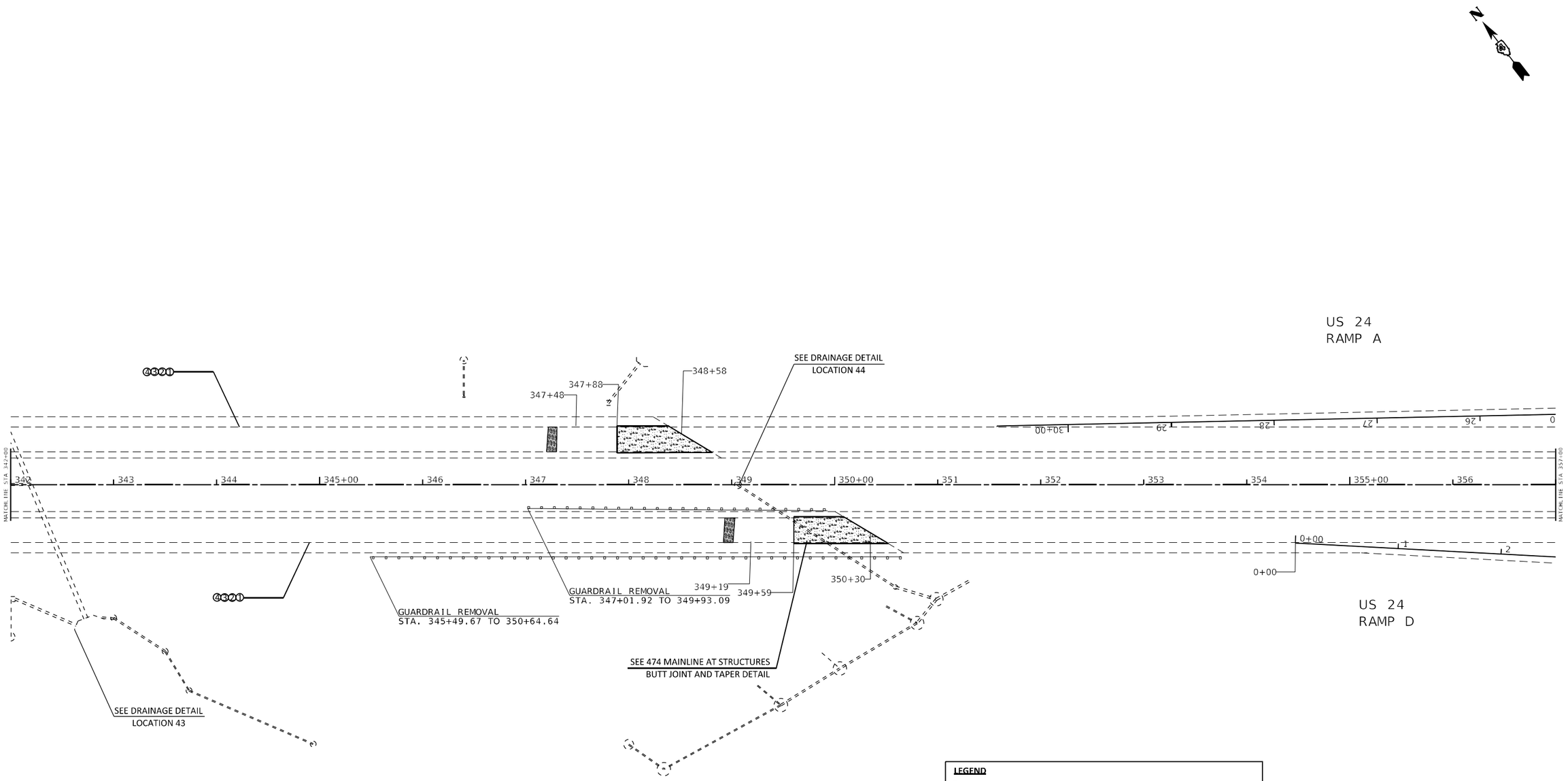

LEGEND

1. HMA SURFACE REMOVAL, 4"
2. POLY. SMA BINDER COURSE IL 12.5 N80, 2"
3. POLY. LEVELING BINDER COURSE (MACHINE METHOD) IL 4.75 N50, 1"
4. POLY. SMA SURFACE COURSE, MIX "E," IL 12.5 N80, 2"

SEE TYPICALS AND SCHEDULE OF QUANTITIES FOR SHOULDER TRERATMENT.
SEE TYPICALS AND SCHEDULE OF QUANTITIES FOR RAMPS TRERATMENT.

- HMA SURFACE REMOVAL BUTT JOINT
- HMA SURFACE REMOVAL, VARIABLE DEPTH
- HMA SURFACE REMOVAL, 3"
- EXPANSION JOINT
- HMA SURFACE REMOVAL 2", 2" SMA SURFACE

0 50 100
SCALE IN FEET

MODEL: $MODELNAME$
FILE NAME: $FILEL$

USER NAME = $USER$	DESIGNED -	REVISED -	
	DRAWN -	REVISED -	
PLOT SCALE = $SCALE$	CHECKED -	REVISED -	
PLOT DATE = $DATE$	DATE -	REVISED -	

STATE OF ILLINOIS
DEPARTMENT OF TRANSPORTATION

PROPOSED AND REMOVAL SHEETS

SCALE: | SHEET OF SHEETS | STA. TO STA.

F.A.I. RTE.	SECTION	COUNTY	TOTAL SHEETS	SHEET NO.
474	72-(1)RS-3;(2,3,4)RS-2	PEORIA	240	90
		CONTRACT NO. 68C45		
	ILLINOIS	FED. AID PROJECT		

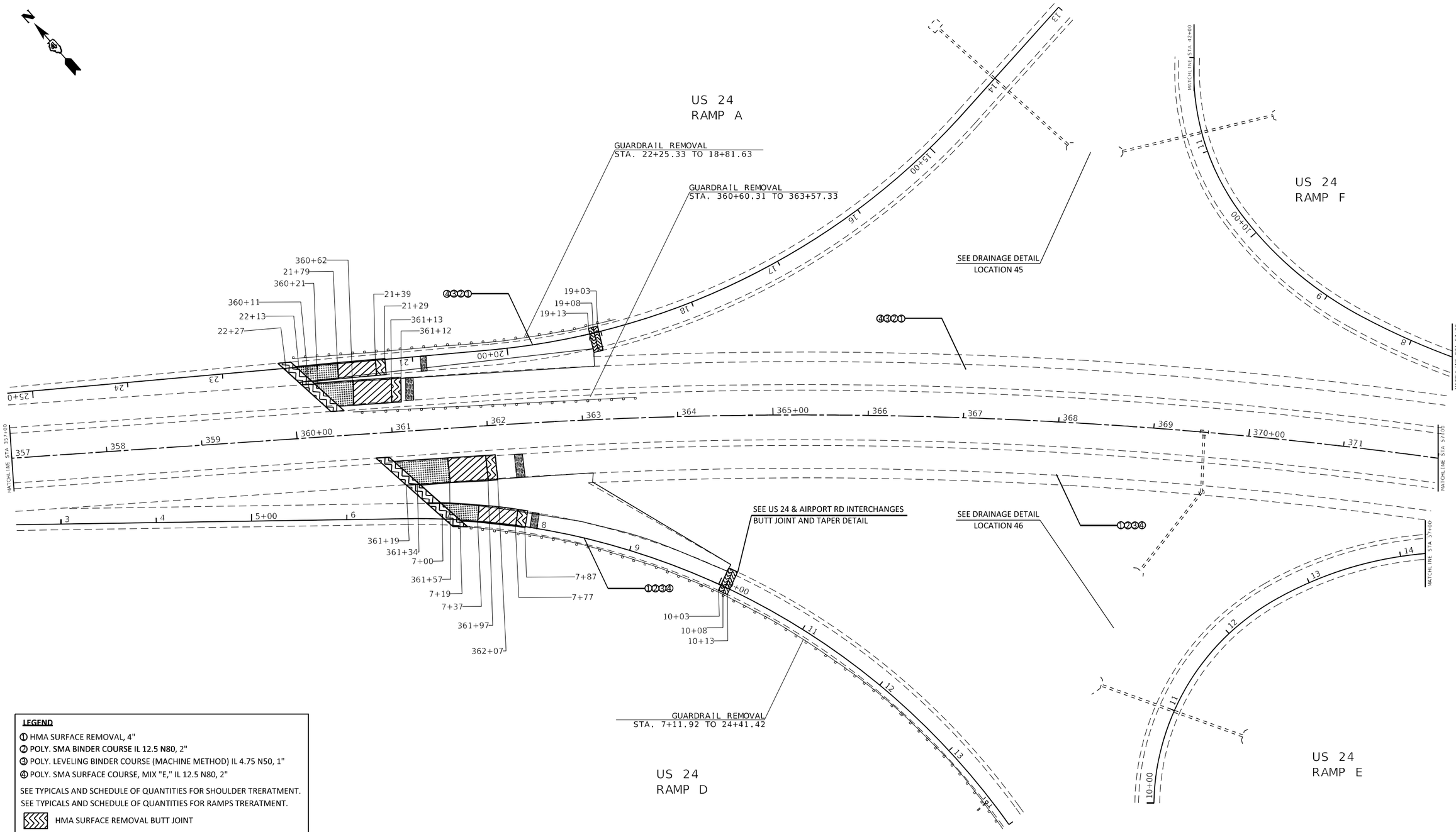

LEGEND

1. HMA SURFACE REMOVAL, 4"
2. POLY. SMA BINDER COURSE IL 12.5 N80, 2"
3. POLY. LEVELING BINDER COURSE (MACHINE METHOD) IL 4.75 N50, 1"
4. POLY. SMA SURFACE COURSE, MIX "E," IL 12.5 N80, 2"

SEE TYPICALS AND SCHEDULE OF QUANTITIES FOR SHOULDER TRERATMENT.
SEE TYPICALS AND SCHEDULE OF QUANTITIES FOR RAMPS TRERATMENT.

- HMA SURFACE REMOVAL BUTT JOINT
- HMA SURFACE REMOVAL, VARIABLE DEPTH
- HMA SURFACE REMOVAL, 3"
- EXPANSION JOINT
- HMA SURFACE REMOVAL 2", 2" SMA SURFACE

MODEL: $MODELNAME$
FILE NAME: $FILEL$

USER NAME = $USER$	DESIGNED -	REVISED -	
	DRAWN -	REVISED -	
PLOT SCALE = $SCALE$	CHECKED -	REVISED -	
PLOT DATE = $DATE$	DATE -	REVISED -	

STATE OF ILLINOIS
DEPARTMENT OF TRANSPORTATION

PROPOSED AND REMOVAL SHEETS

SCALE: | SHEET OF SHEETS | STA. TO STA.

F.A.I. RTE.	SECTION	COUNTY	TOTAL SHEETS	SHEET NO.
474	72-(1)RS-3;(2,3,4)RS-2	PEORIA	240	91

CONTRACT NO. 68C45

ILLINOIS | FED. AID PROJECT

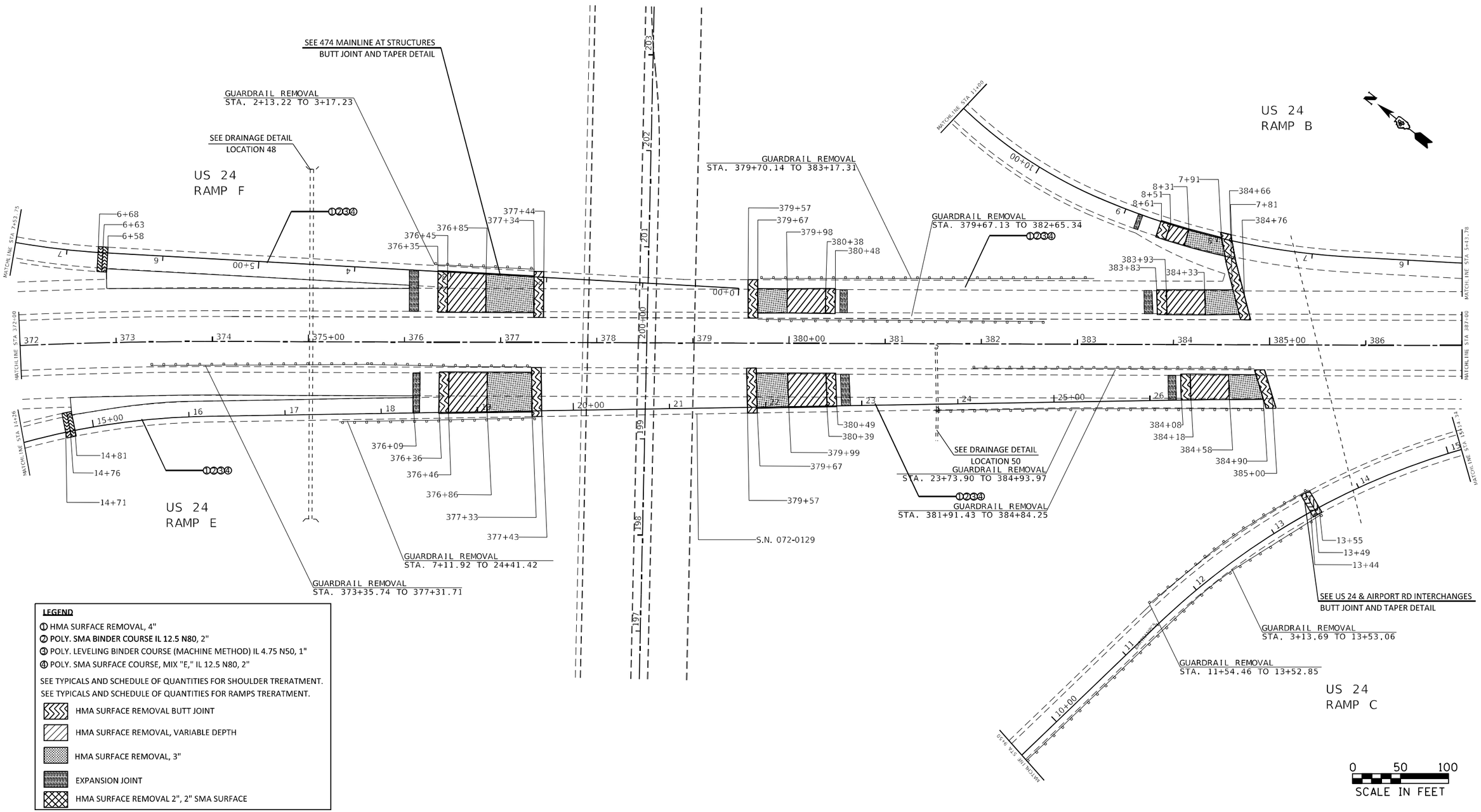

LEGEND

① HMA SURFACE REMOVAL, 4"
② POLY. SMA BINDER COURSE IL 12.5 N80, 2"
③ POLY. LEVELING BINDER COURSE (MACHINE METHOD) IL 4.75 N50, 1"
④ POLY. SMA SURFACE COURSE, MIX "E," IL 12.5 N80, 2"

SEE TYPICALS AND SCHEDULE OF QUANTITIES FOR SHOULDER TRERATMENT.
SEE TYPICALS AND SCHEDULE OF QUANTITIES FOR RAMPS TRERATMENT.

- HMA SURFACE REMOVAL BUTT JOINT
- HMA SURFACE REMOVAL, VARIABLE DEPTH
- HMA SURFACE REMOVAL, 3"
- EXPANSION JOINT
- HMA SURFACE REMOVAL 2", 2" SMA SURFACE

MODEL: $MODELNAME$
FILE NAME: $FILEL$

USER NAME = $USER$	DESIGNED -	REVISED -	
	DRAWN -	REVISED -	
PLOT SCALE = $SCALE$	CHECKED -	REVISED -	
PLOT DATE = $DATE$	DATE -	REVISED -	

STATE OF ILLINOIS
DEPARTMENT OF TRANSPORTATION

PROPOSED AND REMOVAL SHEETS

SCALE: | SHEET OF SHEETS | STA. | TO STA.

F.A.I. RTE.	SECTION	COUNTY	TOTAL SHEETS	SHEET NO.
474	72-(1)RS-3;(2,3,4)RS-2	PEORIA	240	92
		CONTRACT NO. 68C45		
		ILLINOIS FED. AID PROJECT		

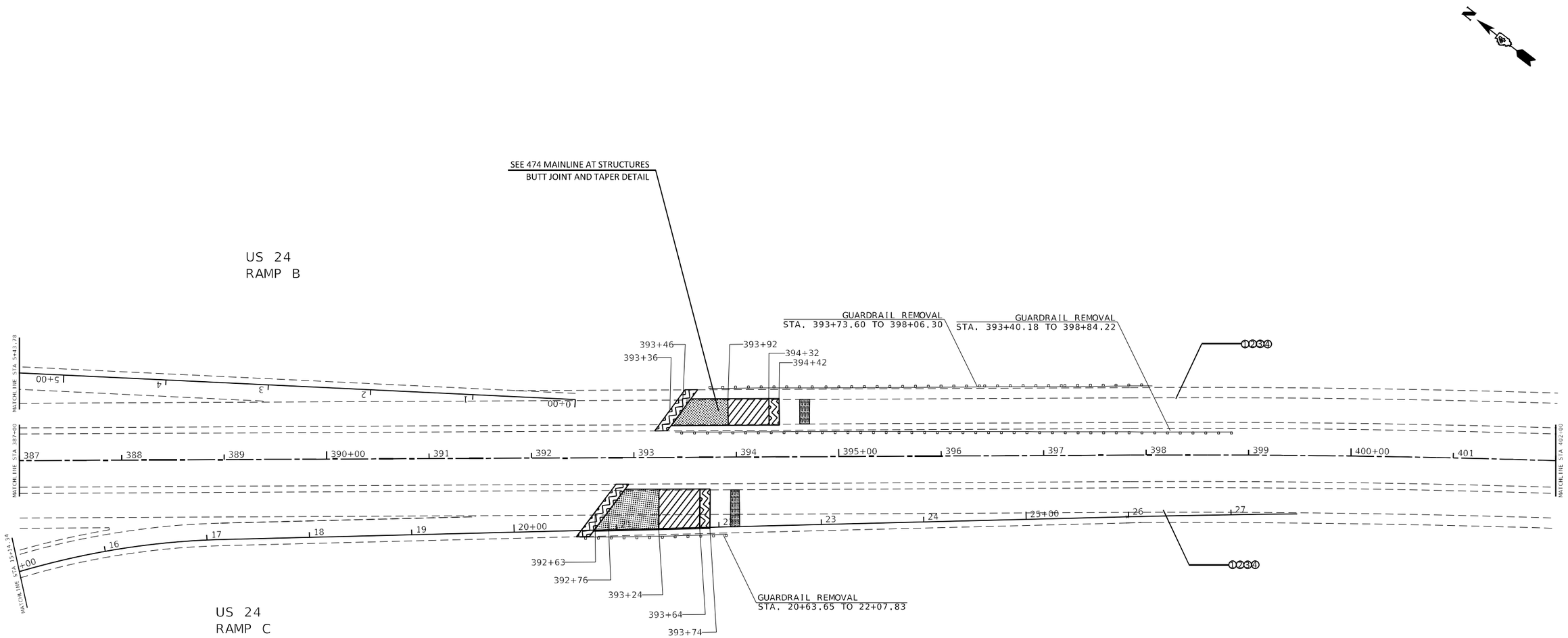

LEGEND

① HMA SURFACE REMOVAL, 4"
② POLY. SMA BINDER COURSE IL 12.5 N80, 2"
③ POLY. LEVELING BINDER COURSE (MACHINE METHOD) IL 4.75 N50, 1"
④ POLY. SMA SURFACE COURSE, MIX "E," IL 12.5 N80, 2"

SEE TYPICALS AND SCHEDULE OF QUANTITIES FOR SHOULDER TRERATMENT.
SEE TYPICALS AND SCHEDULE OF QUANTITIES FOR RAMPS TRERATMENT.

- HMA SURFACE REMOVAL BUTT JOINT
- HMA SURFACE REMOVAL, VARIABLE DEPTH
- HMA SURFACE REMOVAL, 3"
- EXPANSION JOINT
- HMA SURFACE REMOVAL 2", 2" SMA SURFACE

0 50 100
SCALE IN FEET

MODEL: $MODELNAME$
FILE NAME: $FILE$

USER NAME = $USER$	DESIGNED -	REVISED -	
	DRAWN -	REVISED -	
PLOT SCALE = $SCALE$	CHECKED -	REVISED -	
PLOT DATE = $DATE$	DATE -	REVISED -	

STATE OF ILLINOIS
DEPARTMENT OF TRANSPORTATION

PROPOSED AND REMOVAL SHEETS

SCALE: | SHEET OF SHEETS | STA. TO STA.

F.A.I. RTE.	SECTION	COUNTY	TOTAL SHEETS	SHEET NO.
474	72-(1)RS-3;(2,3,4)RS-2	PEORIA	240	93

CONTRACT NO. 68C45

ILLINOIS | FED. AID PROJECT

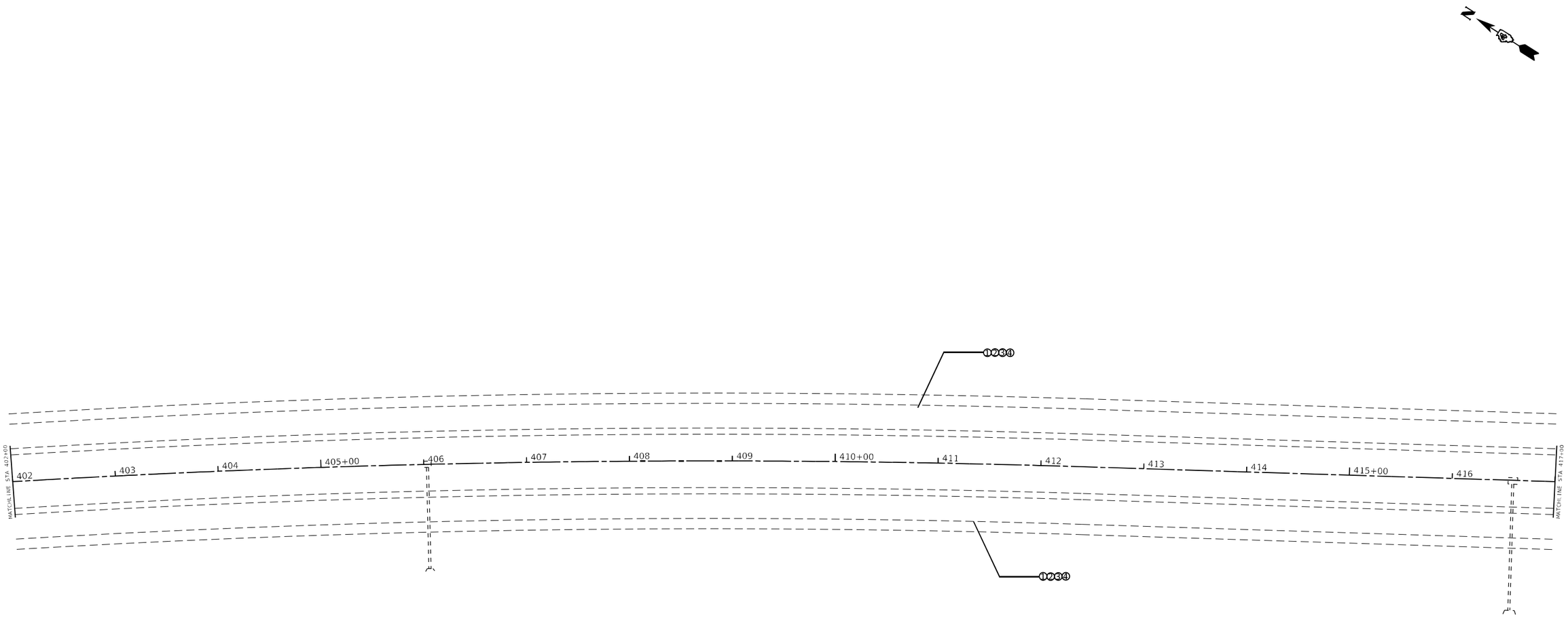

LEGEND

① HMA SURFACE REMOVAL, 4"
② POLY. SMA BINDER COURSE IL 12.5 N80, 2"
③ POLY. LEVELING BINDER COURSE (MACHINE METHOD) IL 4.75 N50, 1"
④ POLY. SMA SURFACE COURSE, MIX "E," IL 12.5 N80, 2"

SEE TYPICALS AND SCHEDULE OF QUANTITIES FOR SHOULDER TRERATMENT.
SEE TYPICALS AND SCHEDULE OF QUANTITIES FOR RAMPS TRERATMENT.

HMA SURFACE REMOVAL BUTT JOINT

HMA SURFACE REMOVAL, VARIABLE DEPTH

HMA SURFACE REMOVAL, 3"

EXPANSION JOINT

HMA SURFACE REMOVAL 2", 2" SMA SURFACE

0 50 100
SCALE IN FEET

MODEL: $MODELNAME$
FILE NAME: $FILEL$

USER NAME = $USER$	DESIGNED -	REVISED -	
	DRAWN -	REVISED -	
PLOT SCALE = $SCALE$	CHECKED -	REVISED -	
PLOT DATE = $DATE$	DATE -	REVISED -	

STATE OF ILLINOIS
DEPARTMENT OF TRANSPORTATION

PROPOSED AND REMOVAL SHEETS

SCALE: SHEET OF SHEETS STA. TO STA.

F.A.I. RTE.	SECTION	COUNTY	TOTAL SHEETS	SHEET NO.
474	72-(1)RS-3;(2,3,4)RS-2	PEORIA	240	94
		CONTRACT NO. 68C45		
	ILLINOIS	FED. AID PROJECT		

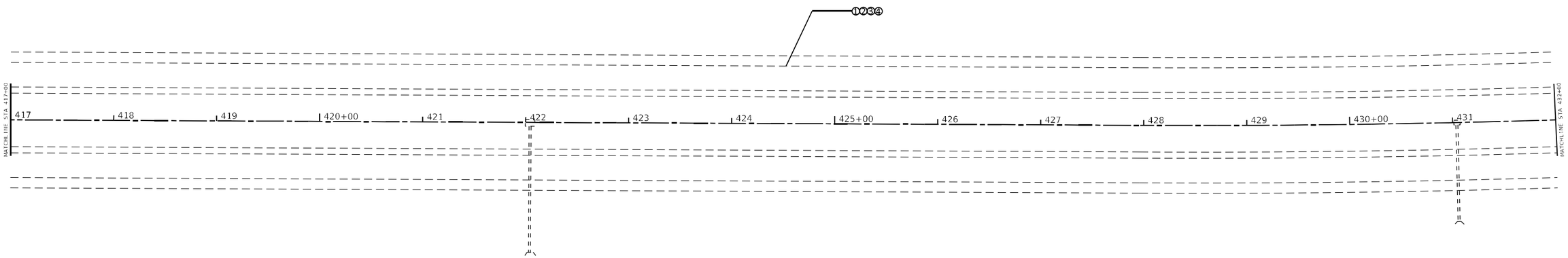

LEGEND

1. HMA SURFACE REMOVAL, 4"
2. POLY. SMA BINDER COURSE IL 12.5 N80, 2"
3. POLY. LEVELING BINDER COURSE (MACHINE METHOD) IL 4.75 N50, 1"
4. POLY. SMA SURFACE COURSE, MIX "E," IL 12.5 N80, 2"

SEE TYPICALS AND SCHEDULE OF QUANTITIES FOR SHOULDER TRERATMENT.
SEE TYPICALS AND SCHEDULE OF QUANTITIES FOR RAMPS TRERATMENT.

- HMA SURFACE REMOVAL BUTT JOINT
- HMA SURFACE REMOVAL, VARIABLE DEPTH
- HMA SURFACE REMOVAL, 3"
- EXPANSION JOINT
- HMA SURFACE REMOVAL 2", 2" SMA SURFACE

0 50 100
SCALE IN FEET

MODEL: $MODELNAME$
FILE NAME: $FILEL$

USER NAME = $USER$	DESIGNED -	REVISED -	
	DRAWN -	REVISED -	
PLOT SCALE = $SCALE$	CHECKED -	REVISED -	
PLOT DATE = $DATE$	DATE -	REVISED -	

STATE OF ILLINOIS
DEPARTMENT OF TRANSPORTATION

PROPOSED AND REMOVAL SHEETS

SCALE: | SHEET OF SHEETS | STA. TO STA.

F.A.I. RTE.	SECTION	COUNTY	TOTAL SHEETS	SHEET NO.
474	72-(1)RS-3;(2,3,4)RS-2	PEORIA	240	95

CONTRACT NO. 68C45

ILLINOIS | FED. AID PROJECT

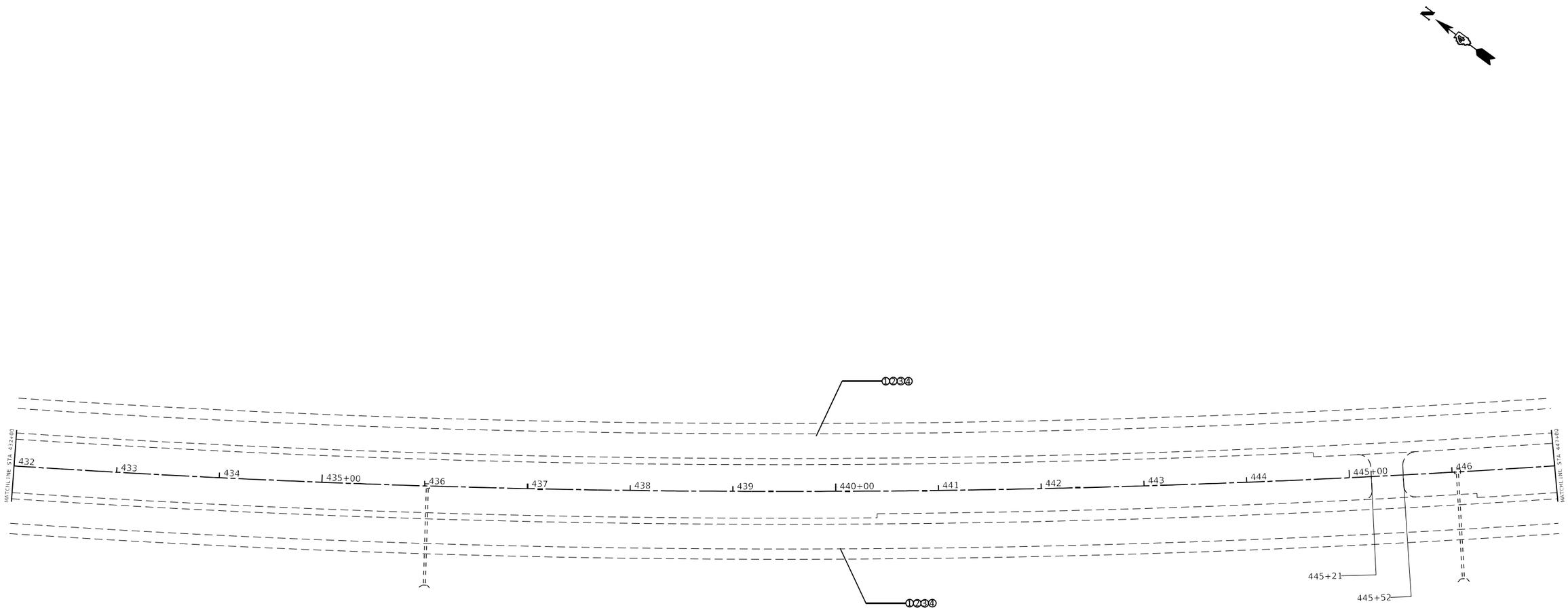

LEGEND

① HMA SURFACE REMOVAL, 4"
② POLY. SMA BINDER COURSE IL 12.5 N80, 2"
③ POLY. LEVELING BINDER COURSE (MACHINE METHOD) IL 4.75 N50, 1"
④ POLY. SMA SURFACE COURSE, MIX "E," IL 12.5 N80, 2"

SEE TYPICALS AND SCHEDULE OF QUANTITIES FOR SHOULDER TRERATMENT.
SEE TYPICALS AND SCHEDULE OF QUANTITIES FOR RAMPS TRERATMENT.

HMA SURFACE REMOVAL BUTT JOINT

HMA SURFACE REMOVAL, VARIABLE DEPTH

HMA SURFACE REMOVAL, 3"

EXPANSION JOINT

HMA SURFACE REMOVAL 2", 2" SMA SURFACE

0 50 100
SCALE IN FEET

MODEL: $MODEL NAME$
FILE NAME: $FILEL$

USER NAME = $USER$	DESIGNED -	REVISED -	
	DRAWN -	REVISED -	
PLOT SCALE = $SCALE$	CHECKED -	REVISED -	
PLOT DATE = $DATE$	DATE -	REVISED -	

STATE OF ILLINOIS
DEPARTMENT OF TRANSPORTATION

PROPOSED AND REMOVAL SHEETS

SCALE: | SHEET OF SHEETS | STA. TO STA.

F.A.I. RTE.	SECTION	COUNTY	TOTAL SHEETS	SHEET NO.
474	72-(1)RS-3;(2,3,4)RS-2	PEORIA	240	96
		CONTRACT NO. 68C45		
	ILLINOIS	FED. AID PROJECT		

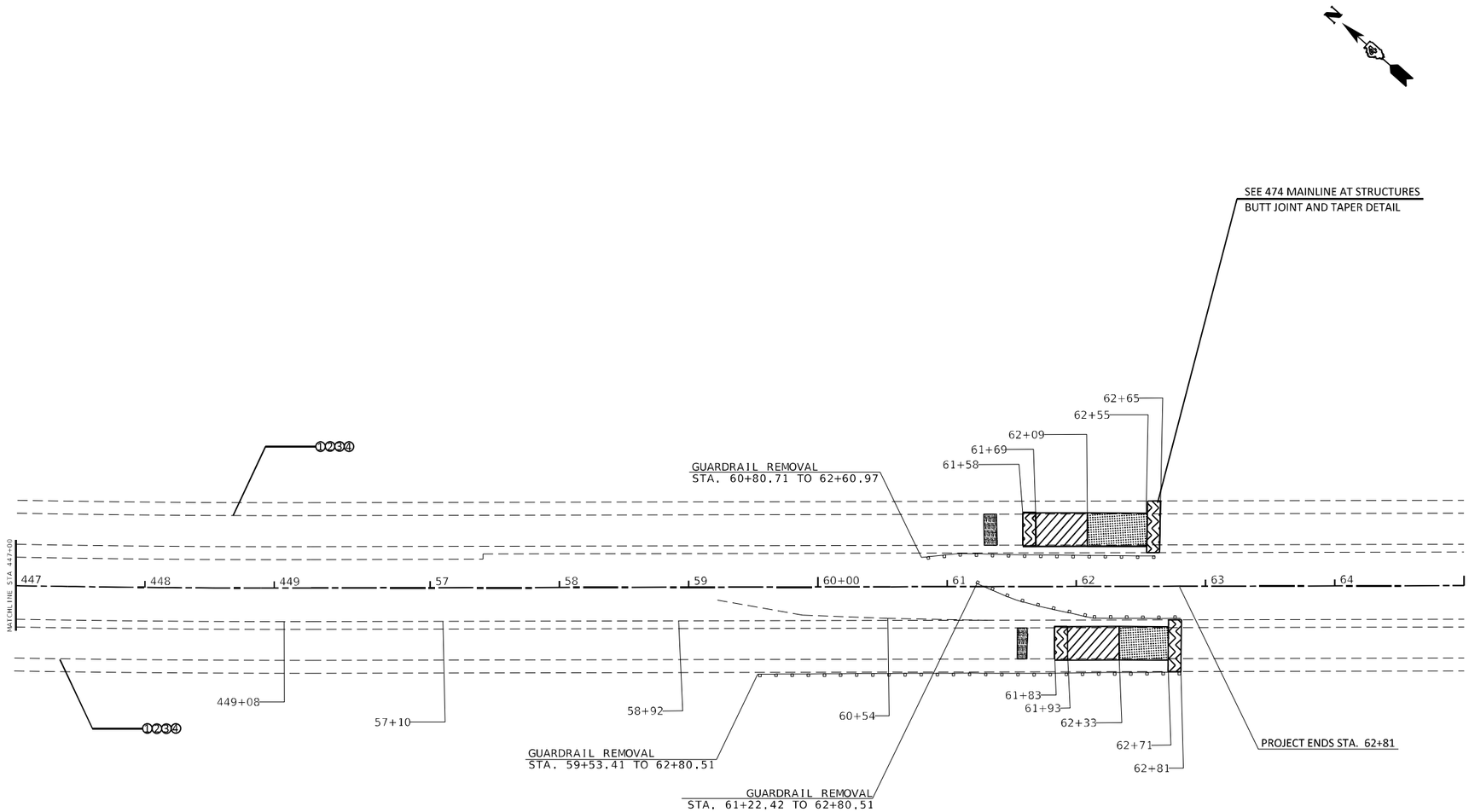

LEGEND

1. HMA SURFACE REMOVAL, 4"
2. POLY. SMA BINDER COURSE IL 12.5 N80, 2"
3. POLY. LEVELING BINDER COURSE (MACHINE METHOD) IL 4.75 N50, 1"
4. POLY. SMA SURFACE COURSE, MIX "E," IL 12.5 N80, 2"

SEE TYPICALS AND SCHEDULE OF QUANTITIES FOR SHOULDER TRERATMENT.
SEE TYPICALS AND SCHEDULE OF QUANTITIES FOR RAMPS TRERATMENT.

- HMA SURFACE REMOVAL BUTT JOINT
- HMA SURFACE REMOVAL, VARIABLE DEPTH
- HMA SURFACE REMOVAL, 3"
- EXPANSION JOINT
- HMA SURFACE REMOVAL 2", 2" SMA SURFACE

0 50 100
SCALE IN FEET

MODEL: $MODELNAME$
FILE NAME: $FILEL$

USER NAME = $USER$	DESIGNED -	REVISED -	
	DRAWN -	REVISED -	
PLOT SCALE = $SCALE$	CHECKED -	REVISED -	
PLOT DATE = $DATE$	DATE -	REVISED -	

STATE OF ILLINOIS
DEPARTMENT OF TRANSPORTATION

PROPOSED AND REMOVAL SHEETS

SCALE: | SHEET OF SHEETS | STA. TO STA.

F.A.I. RTE.	SECTION	COUNTY	TOTAL SHEETS	SHEET NO.
474	72-(1)RS-3;(2,3,4)RS-2	PEORIA	240	97
		CONTRACT NO. 68C45		
	ILLINOIS	FED. AID PROJECT		

LEGEND

① HMA SURFACE REMOVAL, 4"
② POLY. SMA BINDER COURSE IL 12.5 N80, 2"
③ POLY. LEVELING BINDER COURSE (MACHINE METHOD) IL 4.75 N50, 1"
④ POLY. SMA SURFACE COURSE, MIX "E," IL 12.5 N80, 2"

SEE TYPICALS AND SCHEDULE OF QUANTITIES FOR SHOULDER TRERATMENT.
SEE TYPICALS AND SCHEDULE OF QUANTITIES FOR RAMPS TRERATMENT.

- HMA SURFACE REMOVAL BUTT JOINT
- HMA SURFACE REMOVAL, VARIABLE DEPTH
- HMA SURFACE REMOVAL, 3"
- EXPANSION JOINT
- HMA SURFACE REMOVAL 2", 2" SMA SURFACE

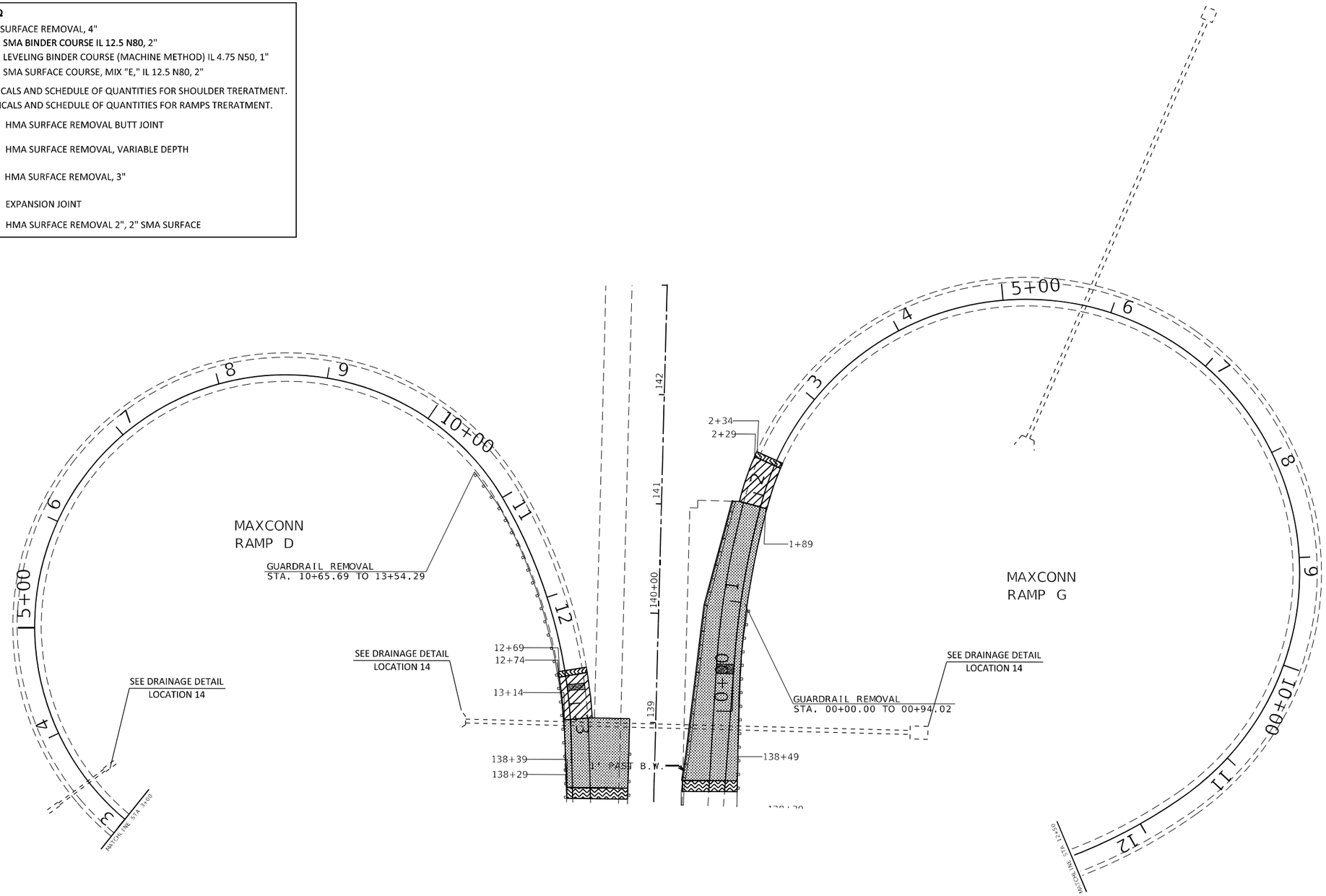

0 50 100
SCALE IN FEET

MODEL: $MODELNAME$
FILE NAME: $FILEL$

USER NAME = $USER$	DESIGNED -	REVISED -	
	DRAWN -	REVISED -	
PLOT SCALE = $SCALE$	CHECKED -	REVISED -	
PLOT DATE = $DATE$	DATE -	REVISED -	

STATE OF ILLINOIS
DEPARTMENT OF TRANSPORTATION

PROPOSED AND REMOVAL SHEETS

SCALE: | SHEET OF SHEETS | STA. TO STA.

F.A.I. RTE.	SECTION	COUNTY	TOTAL SHEETS	SHEET NO.
474	72-(1)RS-3:(2,3,4)RS-2	PEORIA	240	98
		CONTRACT NO. 68C45		
		ILLINOIS FED. AID PROJECT		

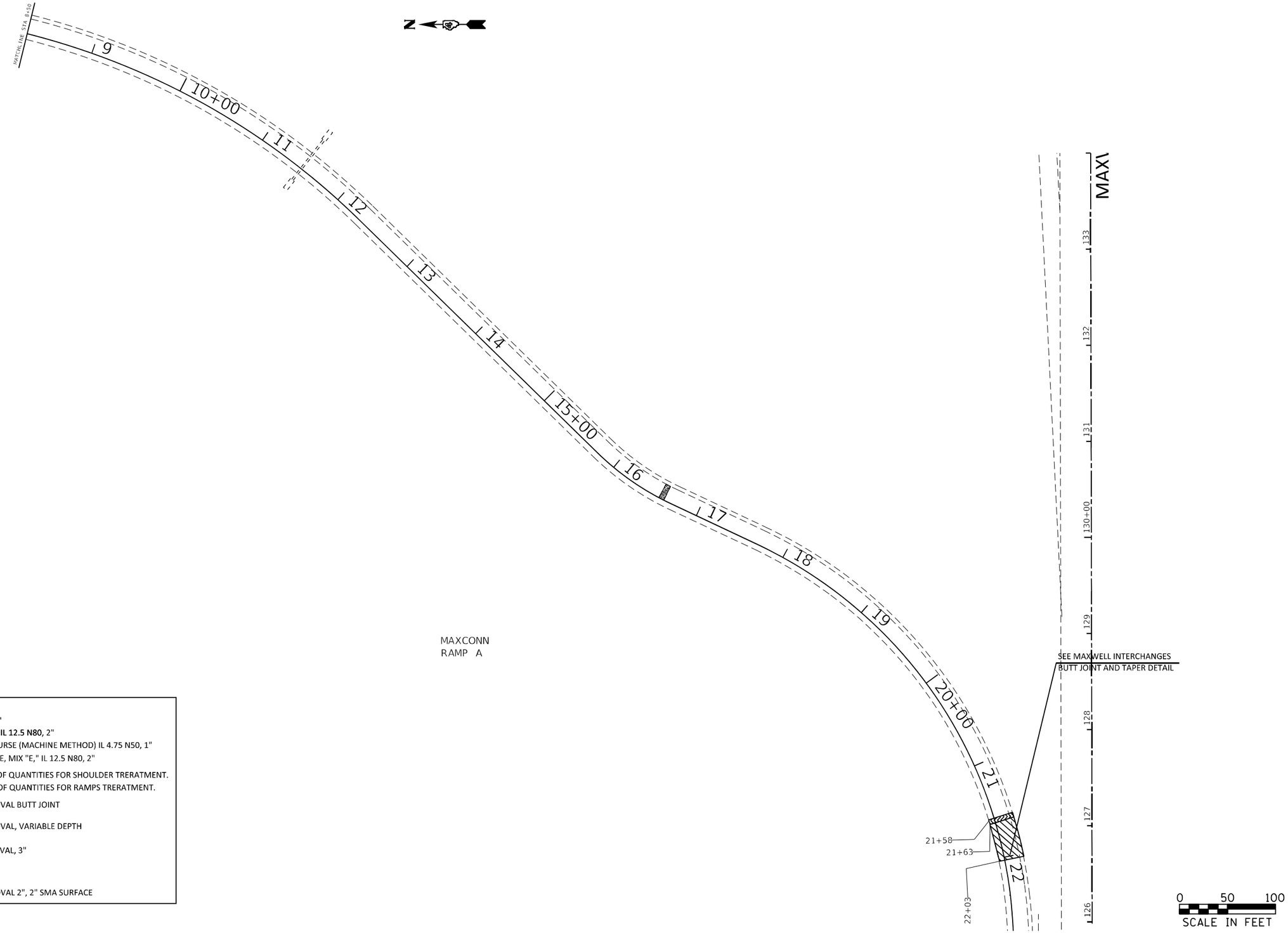

LEGEND

1. HMA SURFACE REMOVAL, 4"
2. POLY. SMA BINDER COURSE IL 12.5 N80, 2"
3. POLY. LEVELING BINDER COURSE (MACHINE METHOD) IL 4.75 N50, 1"
4. POLY. SMA SURFACE COURSE, MIX "E," IL 12.5 N80, 2"

SEE TYPICALS AND SCHEDULE OF QUANTITIES FOR SHOULDER TRERATMENT.
SEE TYPICALS AND SCHEDULE OF QUANTITIES FOR RAMPS TRERATMENT.

- HMA SURFACE REMOVAL BUTT JOINT
- HMA SURFACE REMOVAL, VARIABLE DEPTH
- HMA SURFACE REMOVAL, 3"
- EXPANSION JOINT
- HMA SURFACE REMOVAL 2", 2" SMA SURFACE

MODEL: $MODELNAME$
FILE NAME: $FILEL$

USER NAME = $USER$	DESIGNED -	REVISED -
	DRAWN -	REVISED -
PLOT SCALE = $SCALE$	CHECKED -	REVISED -
PLOT DATE = $DATE$	DATE -	REVISED -

STATE OF ILLINOIS
DEPARTMENT OF TRANSPORTATION

PROPOSED AND REMOVAL SHEETS

SCALE: SHEET OF SHEETS STA. TO STA.

F.A.I. RTE.	SECTION	COUNTY	TOTAL SHEETS	SHEET NO.
474	72-(1)RS-3;(2,3,4)RS-2	PEORIA	240	99
		CONTRACT NO. 68C45		
		ILLINOIS FED. AID PROJECT		

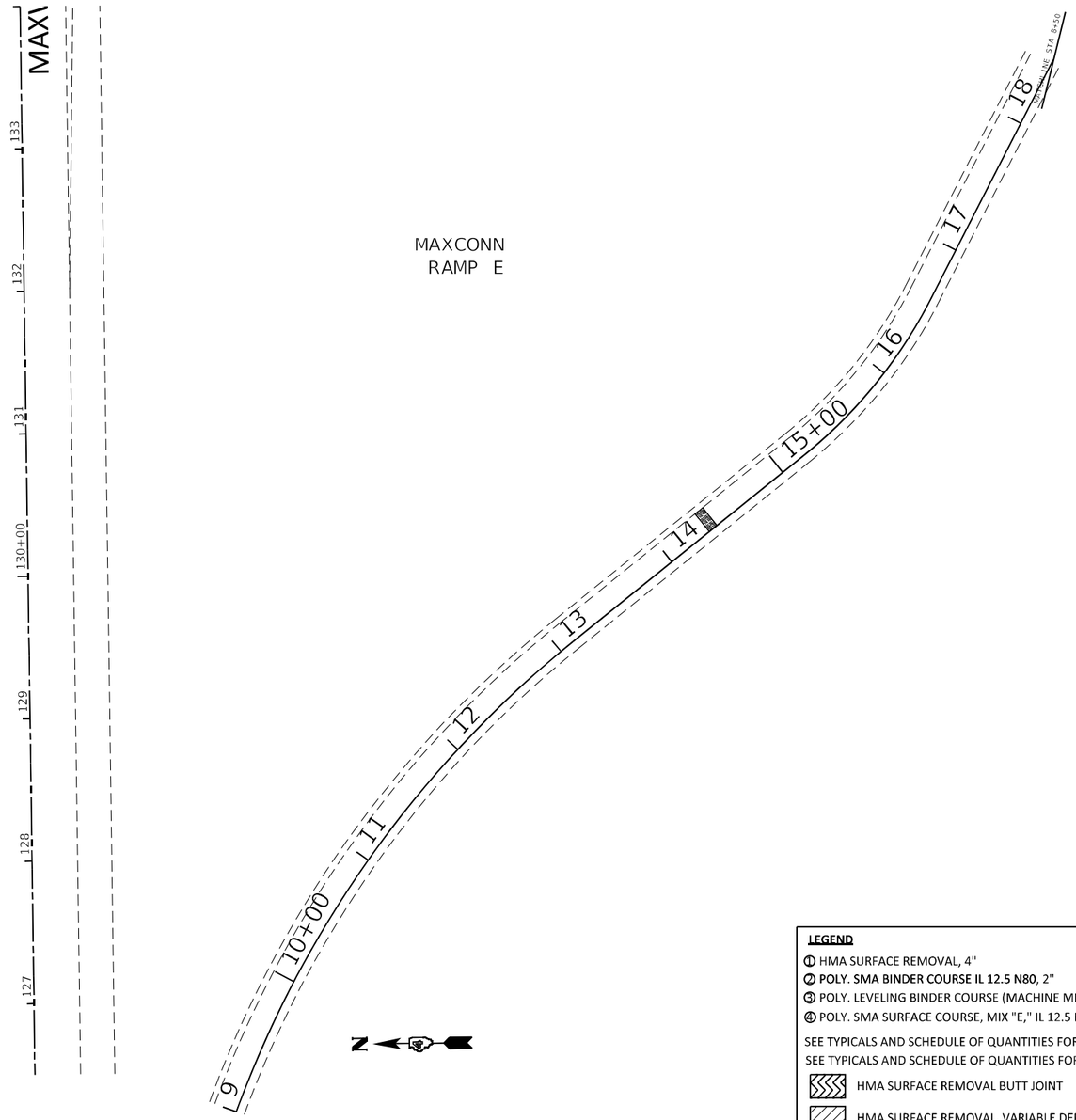

LEGEND

1. HMA SURFACE REMOVAL, 4"
2. POLY. SMA BINDER COURSE IL 12.5 N80, 2"
3. POLY. LEVELING BINDER COURSE (MACHINE METHOD) IL 4.75 N50, 1"
4. POLY. SMA SURFACE COURSE, MIX "E," IL 12.5 N80, 2"

SEE TYPICALS AND SCHEDULE OF QUANTITIES FOR SHOULDER TRERATMENT.
SEE TYPICALS AND SCHEDULE OF QUANTITIES FOR RAMPS TRERATMENT.

- HMA SURFACE REMOVAL BUTT JOINT
- HMA SURFACE REMOVAL, VARIABLE DEPTH
- HMA SURFACE REMOVAL, 3"
- EXPANSION JOINT
- HMA SURFACE REMOVAL 2", 2" SMA SURFACE

0 50 100
SCALE IN FEET

MODEL: $MODELNAME$
FILE NAME: $FILEL$

USER NAME = $USER$	DESIGNED -	REVISED -	
	DRAWN -	REVISED -	
PLOT SCALE = $SCALE$	CHECKED -	REVISED -	
PLOT DATE = $DATE$	DATE -	REVISED -	

STATE OF ILLINOIS
DEPARTMENT OF TRANSPORTATION

PROPOSED AND REMOVAL SHEETS

SCALE: | SHEET OF SHEETS | STA. TO STA.

F.A.I. RTE.	SECTION	COUNTY	TOTAL SHEETS	SHEET NO.
474	72-(1)RS-3;(2,3,4)RS-2	PEORIA	240	100
		CONTRACT NO. 68C45		
	ILLINOIS	FED. AID PROJECT		