STATE OF ILLINOIS
DEPARTMENT OF TRANSPORTATION

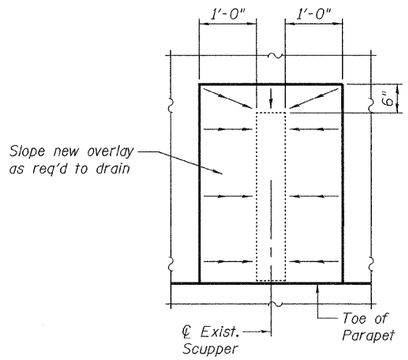

OVERLAY SLOPE DETAIL AT SCUPPER LOCATIONS

Notes:
All Posts shall be normal to parapet.
All joints in rail shall be spliced per detail.
Provide 1-1/8" and 2-1/16" Aluminum Shims for 25% of the Posts. Rail elements shall be parallel to Grade-high spots will be ground and low spots shimmed.
Horizontal rail element & rail posts shown are for information only.

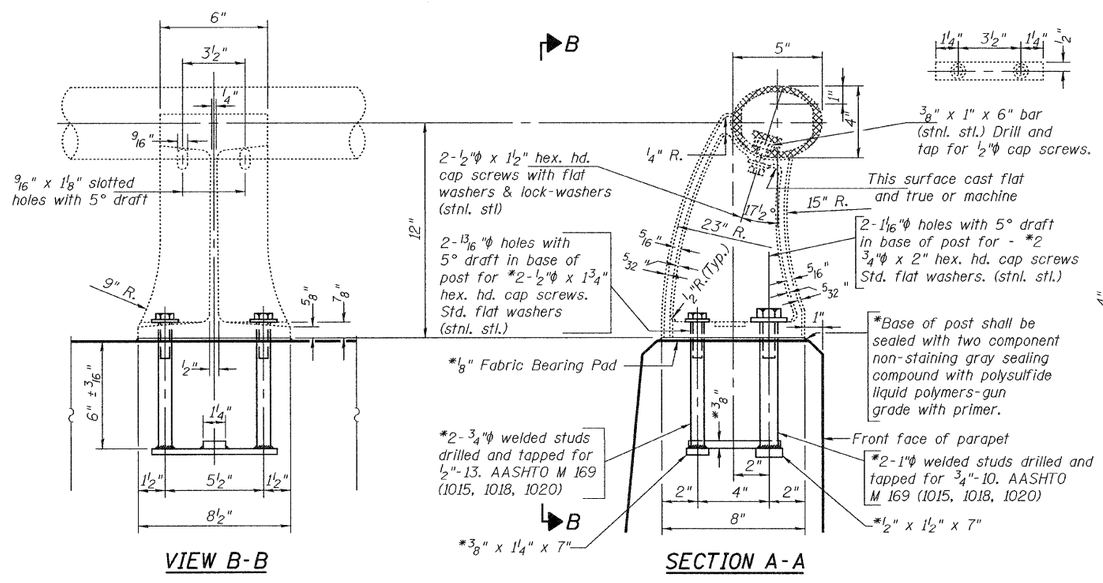

VIEW B-B

SECTION A-A

RAIL POST DETAILS

* New Rail Post anchorage devices will be required at each location where posts are connected to new construction. Cost shall be included with Removing and Re-erecting Existing Railing.

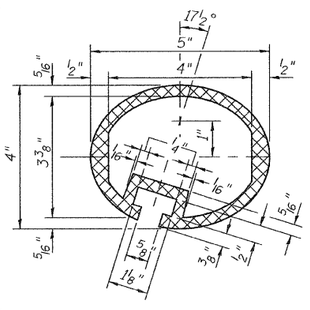

SEC. THRU ELLIPTICAL RAIL SECTION

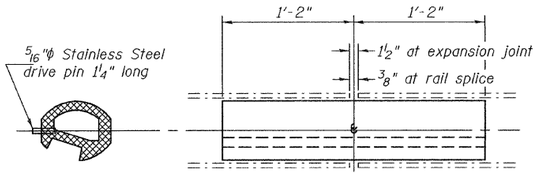

RAIL SPLICE

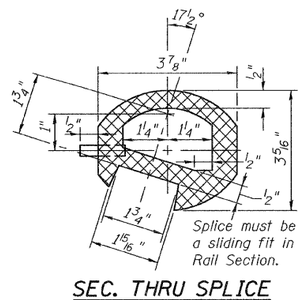

SEC. THRU SPLICE

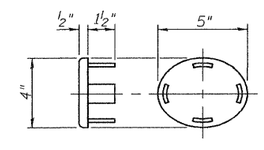

CAST END CAP
DRIVE FIT TYPE

DESIGNED	A.T.H.
CHECKED	I.J.L.
DRAWN	Drew Christopher
CHECKED	A.T.H. I.J.L.

April 29, 2010
EXAMINED A. Carl Kruger ENGINEER OF STRUCTURAL SERVICES
PASSED Ralph E. Anderson ENGINEER OF BRIDGES AND STRUCTURES

R17/REPS 1-27-2000

RAILING AND OVERLAY DETAILS
SN 058-0103

SHEET NO. 8	F.A.P. RTE.	SECTION	COUNTY	TOTAL SHEETS	SHEET NO.
9 SHEETS	322	(58-20)RS	Macon	151	136
			CONTRACT NO. 74150		
	FED. ROAD DIST. NO.	ILLINOIS	FED. AID PROJECT		

SLT-97-001-09

0580103.dgn 4/29/2010 8:27:41 AM