72932

F.A.P. RTE.	SECTION	COUNTY	TOTAL SHEETS	SHEET NO.
322	11-12	CHRISTIAN	284	173
STA.		TO STA.		
FED. ROAD DIST. NO.	ILLINOIS	FED. AID PROJECT		

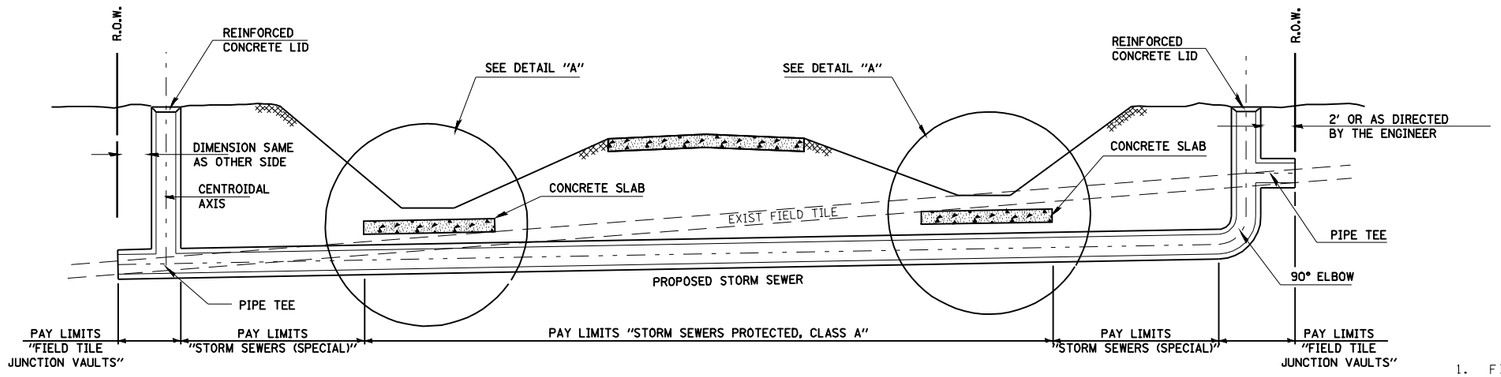

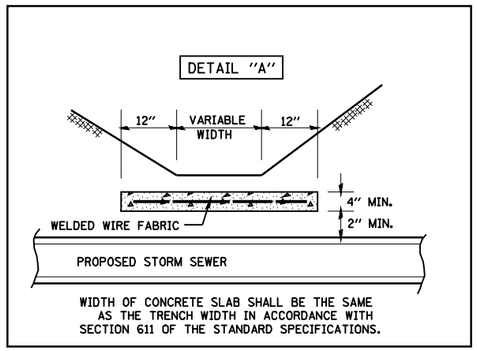

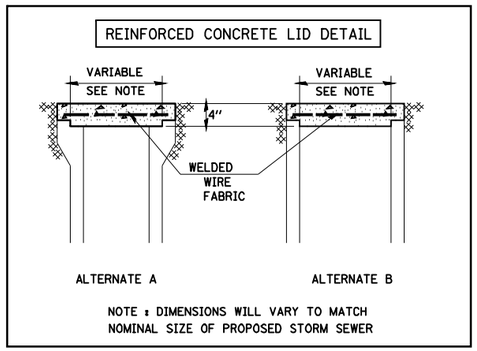

GENERAL NOTES

1. FIELD TILE SHALL BE REPLACED IN ACCORDANCE WITH SECTION 611 OF THE STANDARD SPECIFICATIONS. THE COST PER CONTRACT UNIT PRICE OF ITEMS INCLUDED IN THIS CONTRACT SHALL BE PAID FOR AS STATED IN SECTION 611 OF THE STANDARD SPECIFICATIONS. IF THE CONTRACT UNIT PRICE IS NOT INCLUDED IN THIS CONTRACT, PAYMENT FOR THIS WORK WILL BE IN ACCORDANCE WITH ARTICLE 109.04 OF THE STANDARD SPECIFICATIONS.
2. THE DIAMETER OF THE PROPOSED STORM SEWER SHALL BE EQUAL TO OR GREATER THAN THE EXISTING FIELD TILE.
3. THE REINFORCED CONCRETE LID SHALL BE CLASS SI CONCRETE (MISCELLANEOUS) OR PRECAST REINFORCED CONCRETE.
4. FIELD TILES LESS THAN 7" DIAMETER INTERCEPTED BY THE BACKSLOPE SHALL BE CRUSHED AND REMAIN IN PLACE UNDER THE ROADBED. INTERCEPTED FIELD TILES 7" OR LARGER IN DIAMETER SHALL BE REMOVED AND BACKFILLED IN ACCORDANCE WITH ARTICLE 611.03.

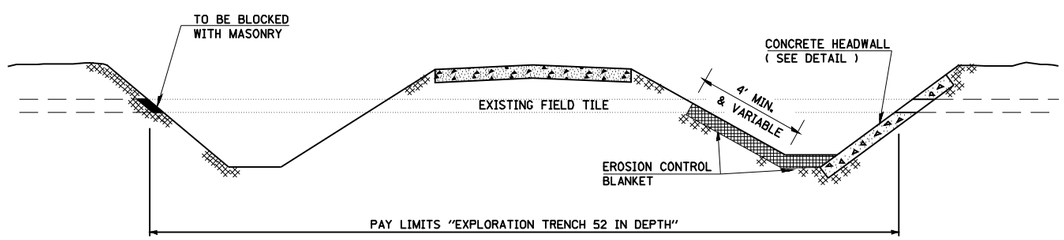

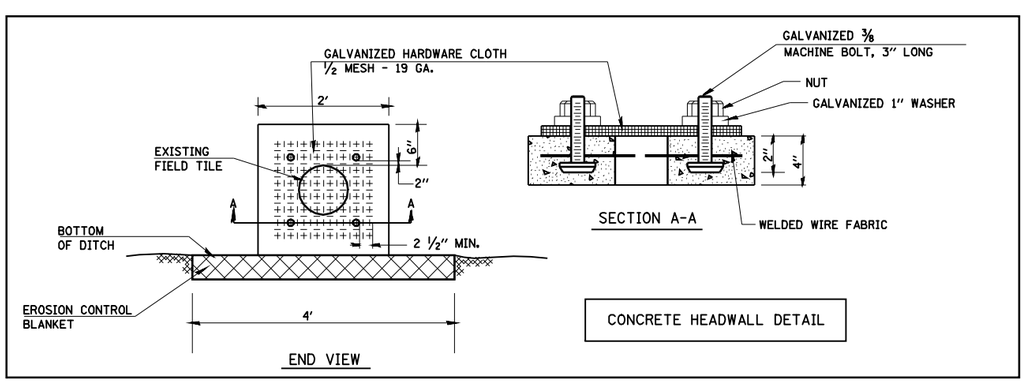

ALL DIMENSIONS ARE IN INCHES UNLESS OTHERWISE SHOWN.

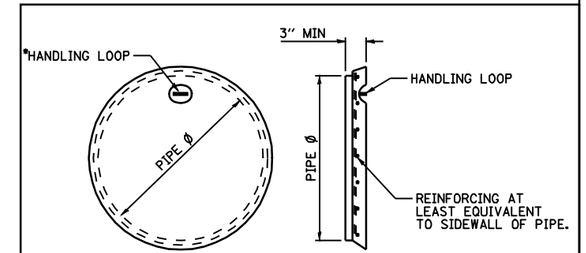

PLAN SECTION

*THE HANDLING LOOP MAY BE OMITTED WHEN THE CAP IS PLACED IN A BURIED INSTALLATION.

COST OF FURNISHING AND INSTALLING CONCRETE PIPE TEE PLUG TO BE INCLUDED IN THE PAY ITEM "PIPE TEE" OF THE SIZE SPECIFIED.

DETAILS OF CONCRETE PIPE TEE PLUG

REVISIONS	
NAME	DATE

ILLINOIS DEPARTMENT OF TRANSPORTATION

MISCELLANEOUS DETAILS - FIELD TILE & PIPE TEE PLUG
FAP 322 (US 51)
SECTION 11-12
CHRISTIAN COUNTY

SCALE: None DRAWN BY DIST. 6
DATE CHECKED BY

Mar-15-2018 12:38:23 PM

$FILE$