SIGN DETAIL
N.T.S.

SIGN NUMBER	Seminary North Right
WIDTH x HGHT.	4'-0" x 5'-6"
BORDER WIDTH	0.75"
CORNER RADIUS	3"
MOUNTING	Ground
BACKGROUND	TYPE: Reflective
	COLOR: Green
LEGEND/BORDER	TYPE: Reflective
	COLOR: White/White

SYMBOL	ROT	X	Y	WID	HT
6-2 (Arrow)	315	15.3	5.8	7	23.1

Panel Style:
Dimensions are in inches.tenths

Letter locations are panel edge to lower left corner

LETTER POSITIONS (X)

											LENGTH	SERIES/SIZE
S	e	m	i	n	a	r	y					D 2000
6.8	11.8	16	23	25.2	29.6	34.1	38.7				34.3	64.5
S	t	r	e	e	t							D 2000
13.7	18.1	21.2	23.9	28.1	31.9						20.6	64.5
N	o	r	t	h								D 2000
14.6	19.7	24.4	26.8	29.9							18.8	64.5

SIGN DETAIL
N.T.S.

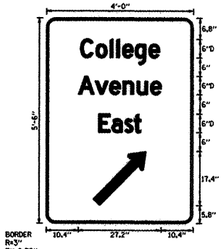

SIGN NUMBER	College East Right
WIDTH x HGHT.	4'-0" x 5'-6"
BORDER WIDTH	0.75"
CORNER RADIUS	3"
MOUNTING	Ground
BACKGROUND	TYPE: Reflective
	COLOR: Green
LEGEND/BORDER	TYPE: Reflective
	COLOR: White/White

SYMBOL	ROT	X	Y	WID	HT
6-2 (Arrow)	315	15.3	5.8	7	23.1

Panel Style:
Dimensions are in inches.tenths

Letter locations are panel edge to lower left corner

LETTER POSITIONS (X)

											LENGTH	SERIES/SIZE
C	o	l	l	e	g	e						D 2000
11	16.1	20.7	22.8	24.8	28.9	33.5					26	64.5
A	v	e	n	u	e							D 2000
10.4	15.8	20.6	24.9	29.6	34.1						27.2	64.5
E	a	s	t									D 2000
17	21.3	25.5	28.6								14	64.5

SIGN DETAIL
N.T.S.

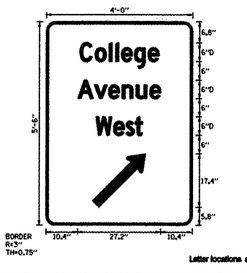

SIGN NUMBER	College West Right
WIDTH x HGHT.	4'-0" x 5'-6"
BORDER WIDTH	0.75"
CORNER RADIUS	3"
MOUNTING	Ground
BACKGROUND	TYPE: Reflective
	COLOR: Green
LEGEND/BORDER	TYPE: Reflective
	COLOR: White/White

SYMBOL	ROT	X	Y	WID	HT
6-2 (Arrow)	315	15.3	5.8	7	23.1

Panel Style:
Dimensions are in inches.tenths

Letter locations are panel edge to lower left corner

LETTER POSITIONS (X)

											LENGTH	SERIES/SIZE
C	o	l	l	e	g	e						D 2000
11	16.1	20.7	22.8	24.8	28.9	33.5					26	64.5
A	v	e	n	u	e							D 2000
10.4	15.8	20.6	24.9	29.6	34.1						27.2	64.5
W	e	s	t									D 2000
16.3	22.2	26.2	29.3								15.4	64.5

SIGN DETAIL
N.T.S.

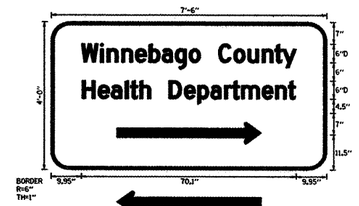

SIGN NUMBER	W.C. Health Dept.
WIDTH x HGHT.	7'-6" x 4'-0"
BORDER WIDTH	1"
CORNER RADIUS	6"
MOUNTING	Ground
BACKGROUND	TYPE: Reflective
	COLOR: Blue
LEGEND/BORDER	TYPE: Reflective
	COLOR: White/White

SYMBOL	ROT	X	Y	WID	HT
6-2 (Arrow)	270	21.4	8.5	7	47.1

Panel Style:
Dimensions are in

"Winnebago County Health Department Left Arrow" sign has same dimensions as shown above except arrow will be rotated 180 degrees.

Letter locations are panel edge to lower left corner

LETTER POSITIONS (X)

																							LENGTH	SERIES/SIZE
W	i	n	n	e	b	a	g	o		C	o	u	n	t	y									D 2000
9.9	16.1	18.2	22.9	27.3	31.7	36	40.3	44.9	48.5	54.5	59.8	64.1	68.9	73	75.8								70.1	64.5
H	e	a	l	t	h		D	e	p	a	r	t	m	e	n	t								D 2000
10.2	15.4	19.5	24	25.7	28.7	32.3	36.3	43.3	47.7	51.9	56.5	59	62	68.9	73.2	77.4							69.5	64.5

CMT
CRAWFORD, MURPHY & TILLY, INC.
CONSULTING ENGINEERS
License No. 184-000613

USER NAME = Steve Prange	DESIGNED - SJP / MNB	REVISED -	
	DRAWN - ERD	REVISED -	
PLOT SCALE = 40.0000 ' / IN.	CHECKED - SJP	REVISED -	
PLOT DATE = 02/04/11	DATE - 02/04/2011	REVISED -	

CITY OF ROCKFORD
MORGAN STREET BRIDGE

SIGN DETAILS – 3

SCALE: N/A | SHEET NO. 3 OF 4 SHEETS | STA. TO STA.

F.A. RTE.	SECTION	COUNTY	TOTAL SHEETS	SHEET NO.
5077	99-00493-00-BR	WINNEBAGO	253	101

CONTRACT NO. 85529

FED. ROAD DIST. NO. 2 | ILLINOIS | FED. AID PROJECT BRM-5099(65)

SIGN DETAIL
N.T.S.

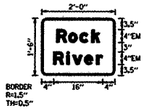

SIGN NUMBER	Rock River
WIDTH x HIGHT.	2'-0" x 1'-6"
BORDER WIDTH	0.5"
CORNER RADIUS	1.5"
MOUNTING	Ground
BACKGROUND	TYPE: Reflective
	COLOR: Green
LEGEND/BORDER	TYPE: Reflective
	COLOR: White/White

SYMBOL	ROT	X	Y	WID	HT

Panel Style:
Dimensions are in Inches.tenths

Letter locations are panel edge to lower left corner

LETTER POSITIONS (X)

					LENGTH	SERIES/SIZE
R	o	c	k			EM 2000
5	8.9	12.5	16.4		14.1	42.9
R	i	v	e	r		EM 2000
4	8.3	10.3	14.1	18	18	42.9

(PROVIDED BY CITY)

SIGN DETAIL
N.T.S.

SIGN NUMBER	10th Ave. Park (Site)
WIDTH x HIGHT.	3'-0" x 0'-6"
BORDER WIDTH	0.5"
CORNER RADIUS	1.5"
MOUNTING	Ground
BACKGROUND	TYPE: Reflective
	COLOR: Green
LEGEND/BORDER	TYPE: Reflective
	COLOR: White/White

SYMBOL	ROT	X	Y	WID	HT
6-7 (Site)	0	2	1.5	5.2	3
6-2 (Arrow)	270	31	2	2	3

Panel Style:
Dimensions are in Inches.tenths

Letter locations are panel edge to lower left corner

LETTER POSITIONS (X)

																					LENGTH	SERIES/SIZE
1	0	T	H		A	V	E		P	A	R	K										D 2000
6.6	9.5	11.2	12.8	14.1	16.1	17.9	19.6	21	23	24.6	26.6	28.2									21	2

SIGN DETAIL
N.T.S.

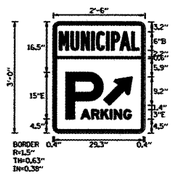

SIGN NUMBER	Municipal Parking
WIDTH x HIGHT.	2'-6" x 3'-0"
BORDER WIDTH	0.63"
CORNER RADIUS	1.5"
MOUNTING	Ground
BACKGROUND	TYPE: Reflective
	COLOR: White
LEGEND/BORDER	TYPE: Reflective
	COLOR: Green/Green

SYMBOL	ROT	X	Y	WID	HT
6-2 (Arrow)	315	16.7	8.9	6.5	11.7

Panel Style:
Dimensions are in Inches.tenths

Letter locations are panel edge to lower left corner

LETTER POSITIONS (X)

																					LENGTH	SERIES/SIZE
M	U	N	I	C	I	P	A	L														B 2000
2	5.6	9.2	12.7	14.2	17.5	19.1	21.9	25.7													26	6
P	A	R																				E 2000
4.3	9.1	12.7																			12.2	15
A	R	K	I	N	G																	E 2000
9.1	12.7	15.7	18.7	20	23.1																18.4	3

(PROVIDED BY CITY)

SIGN DETAIL
N.T.S.

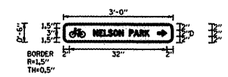

SIGN NUMBER	Nelson Park (Site)
WIDTH x HIGHT.	3'-0" x 0'-6"
BORDER WIDTH	0.5"
CORNER RADIUS	1.5"
MOUNTING	Ground
BACKGROUND	TYPE: Reflective
	COLOR: Green
LEGEND/BORDER	TYPE: Reflective
	COLOR: White/White

SYMBOL	ROT	X	Y	WID	HT
6-7 (Site)	0	2	1.5	5.2	3
6-2 (Arrow)	270	31	2	2	3

Panel Style:
Dimensions are in Inches.tenths

Letter locations are panel edge to lower left corner

LETTER POSITIONS (X)

																					LENGTH	SERIES/SIZE
N	E	L	S	O	N		P	A	R	K												D 2000
10	11.8	13.4	14.8	16.4	18.3	19.7	21.7	23.1	25.1	26.6											18.3	2

L:\ROCKFORD\6826802\Draw\C400_Sheets\R_Signing Details_04.dgn

CMT
CRAWFORD, MURPHY & TILLY, INC.
CONSULTING ENGINEERS
License No. 184-000613

USER NAME = Steve Prange	DESIGNED - SJP / MNB	REVISED -	
	DRAWN - ERD	REVISED -	
PLOT SCALE = 40.0000 ' / IN.	CHECKED - SJP	REVISED -	
PLOT DATE = 02/04/11	DATE - 02/04/2011	REVISED -	

CITY OF ROCKFORD
MORGAN STREET BRIDGE

SIGN DETAILS – 4

SCALE: N/A | SHEET NO. 4 OF 4 SHEETS | STA. | TO STA.

F.A. RTE.	SECTION	COUNTY	TOTAL SHEETS	SHEET NO.
5077	99-00493-00-BR	WINNEBAGO	253	102

CONTRACT NO. 85529

FED. ROAD DIST. NO. 2 | ILLINOIS | FED. AID PROJECT BRM-5099(65)

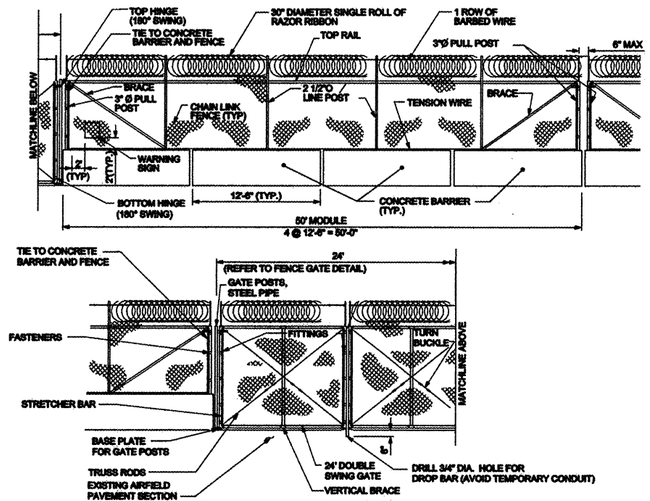

TEMPORARY FENCE W/ GATE ELEVATION

NOT TO SCALE

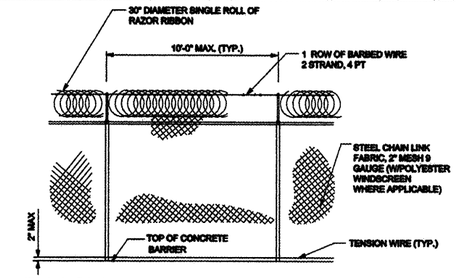

TEMPORARY TYPE D FENCE W/ GATE ELEVATION

NOT TO SCALE

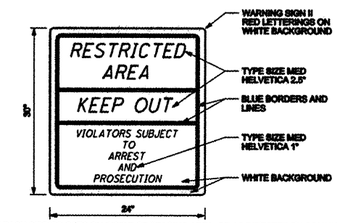

POSITION SIGN EACH SIDE OF GATE ON INSIDE OF STAGING AREA, OR AS DIRECTED BY COMMISSIONER.

WARNING SIGN DETAIL

NOT TO SCALE

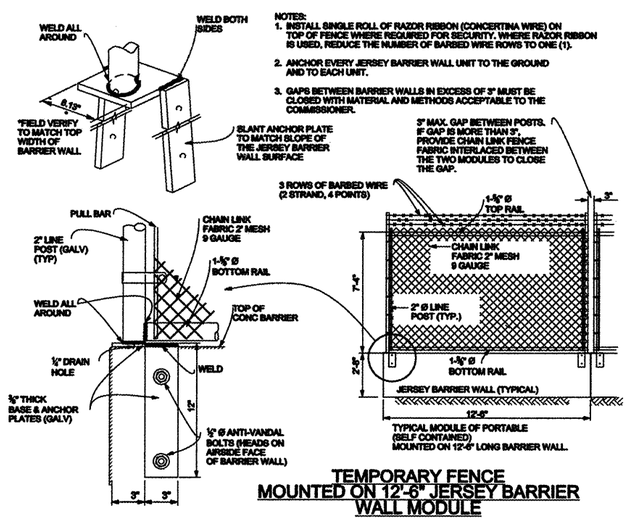

NOTES:
1. INSTALL SINGLE ROLL OF RAZOR RIBBON (CONCERTINA WIRE) ON TOP OF FENCE WHERE REQUIRED FOR SECURITY. WHERE RAZOR RIBBON IS USED, REDUCE THE NUMBER OF BARBED WIRE ROWS TO ONE (1).
2. ANCHOR EVERY JERSEY BARRIER WALL UNIT TO THE GROUND AND TO EACH UNIT.
3. GAPS BETWEEN BARRIER WALLS IN EXCESS OF 3" MUST BE CLOSED WITH MATERIAL AND METHODS ACCEPTABLE TO THE COMMISSIONER.

TEMPORARY FENCE MOUNTED ON 12'-6" JERSEY BARRIER WALL MODULE

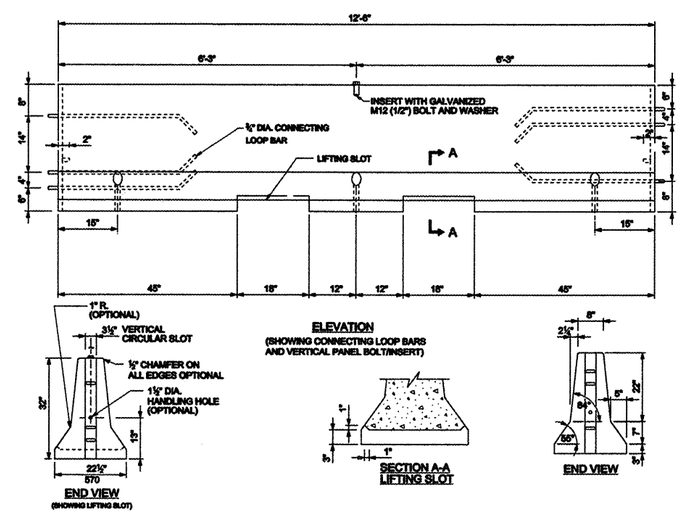

CONCRETE BARRIER FOR TEMPORARY FENCE

NOT TO SCALE

CMT ©Copyright CMT, Inc. CRAWFORD, MURPHY & TILLY, INC. CONSULTING ENGINEERS License No. 184-000613	USER NAME = Steve Prange	DESIGNED - SJP / MNB	REVISED -
		DRAWN - ERD	REVISED -
	PLOT SCALE = 200.0000 ' / IN.	CHECKED - SJP	REVISED -
	PLOT DATE = 02/04/11	DATE - 02/04/2011	REVISED -

CITY OF ROCKFORD
MORGAN STREET BRIDGE

CONSTRUCTION DETAILS - 1

SCALE: N/A | SHEET NO. 1 OF 9 SHEETS | STA. N/A | TO STA. N/A

F.A. RTE.	SECTION	COUNTY	TOTAL SHEETS	SHEET NO.
5077	99-00493-00-BR	WINNEBAGO	253	103

CONTRACT NO. 85529

FED. ROAD DIST. NO. 2 | ILLINOIS | FED. AID PROJECT BRM-5099(65)

I:\rockford\0826882\dgn\cadd_sheets\R_CONST_DET_01.dgn

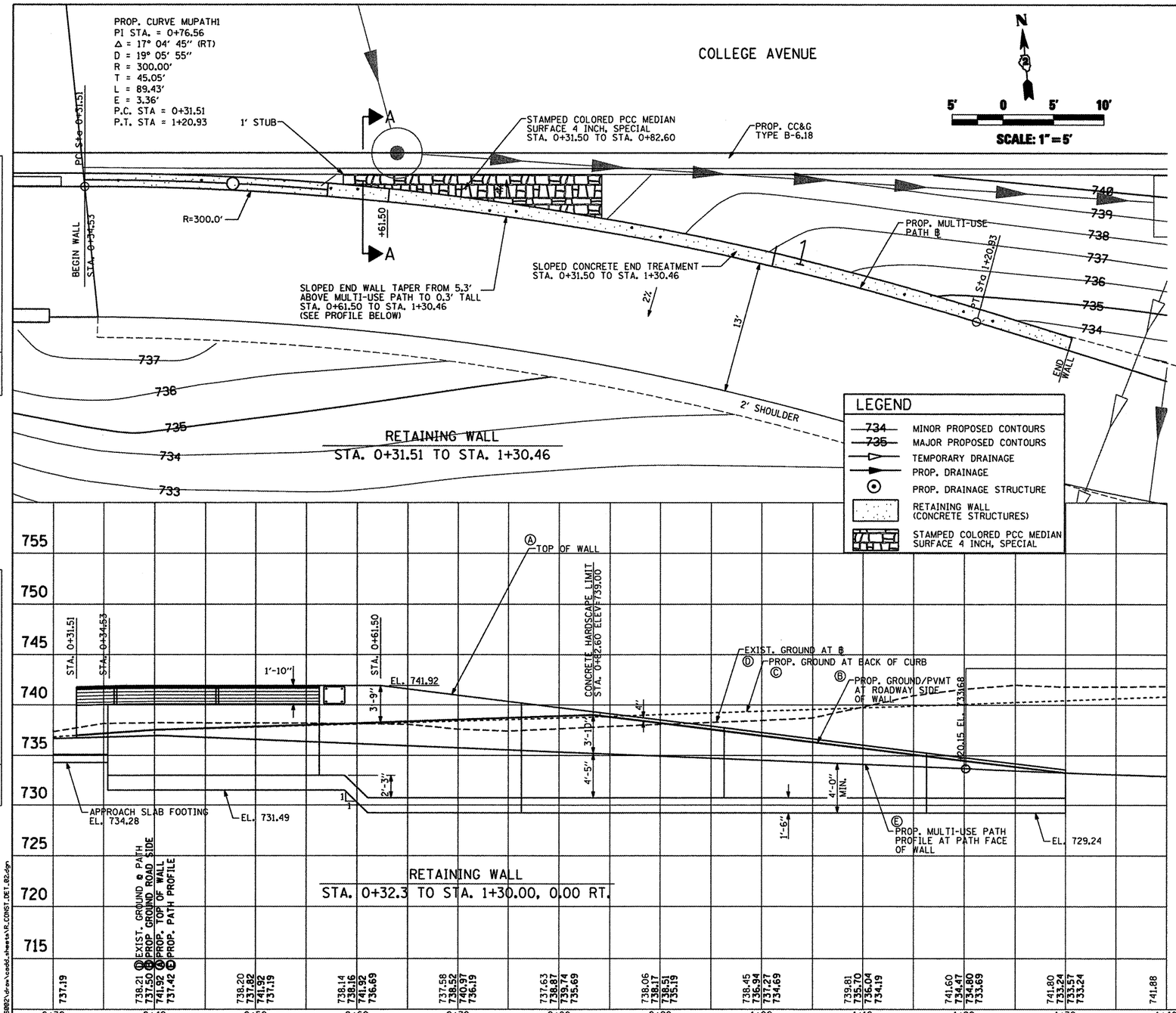

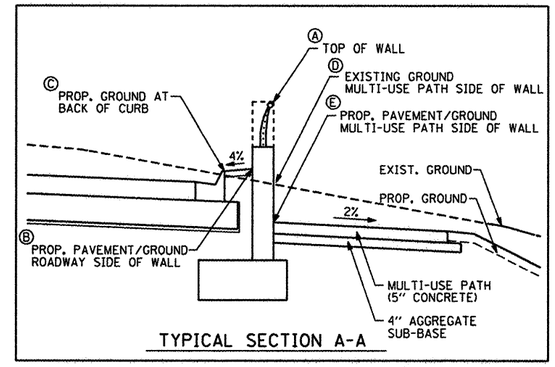

TYPICAL SECTION A-A

BILL OF MATERIALS

BAR	NO	SIZE	LENGTH	SHAPE
h60(E)	18	#5	40'-5"	
h61(E)	6	#5	16'-2"	
h62(E)	4	#5	17'-1"	
h63(E)	12	#5	39'-8"	
h64(E)	10	#5	32'-6"	
h65(E)	6	#5	13'-4"	
h66(E)	4	#5	10'-6"	
n60(E)	38	#6	8'-7"	
n61(E)	28	#6	6'-5"	
n62(E)	25	#6	6'-11"	
n63(E)	25	#6	8'-5"	
n64(E)	17	#6	5'-11"	
t60(E)	99	#6	10'-5"	
t61(E)	40	#6	6'-0"	
t62(E)	54	#5	6'-0"	
t63(E)	14	#6	3'-0"	
t64(E)	19	#5	3'-0"	
v60(E)	29	#5	6'-8"	
v61(E)	28	#6	8'-9"	
v62(E)	22	#5	10'-8"	
v63(E)	25	#6	6'-8"	
v64(E)	25	#5	9'-1"	
v65(E)	25	#5	6'-6"	
v66(E)	17	#5	4'-0"	
w60(E)	30	#5	25'-8"	
w61(E)	30	#5	15'-0"	
w62(E)	30	#5	9'-8"	
w63(E)	36	#5	21'-8"	
w64(E)	10	#5	13'-2"	
CONCRETE STRUCTURES			CU. YD.	74.9
REINFORCEMENT BARS, EPOXY COATED			POUND	9800
STRUCTURE EXCAVATION			CU. YD.	499

NOTES

1. EXCAVATION REQUIRED FOR INSTALLATION OF THE PROPOSED RETAINING WALL SHALL PAID AT THE CONTRACT UNIT COST FOR STRUCTURE EXCAVATION.
2. SEE SHEETS 34 & 65 FOR SITE GRADING DETAILS IN THE VICINITY OF THE PROPOSED RETAINING WALL.
3. IT IS NOT ANTICIPATED THAT THE INSTALLATION OF A TEMPORARY EARTH RETAINING SYSTEM WILL BE REQUIRED FOR THE INSTALLATION OF THE PROPOSED RETAINING WALL. THE COST OF ANY TEMPORARY SYSTEM SHALL NOT BE PAID SEPARATELY AND SHALL BE INCLUDED IN THE CONTRACT UNIT COSTS FOR THE PAY ITEMS ASSOCIATED WITH THE WALL CONSTRUCTION.
4. PROPOSED WALL ALIGNMENT AND COORDINATE INFORMATION FOR LAYOUT IS PROVIDED ON SHEET 34.
5. PROPOSED RAILING DETAILS ARE SHOWN ON SHEET 109 AND SHALL BE PAID AS "PARAPET RAILING, SPECIAL".
6. PROPOSED ELECTRICAL CONDUIT AND JUNCTION BOX DETAILS ARE PROVIDED ON SHEET 122 & 116.
7. SEE RETAINING WALL DETAILS ON SHEET 104A

USER NAME = Steve Prange	DESIGNED SJP / MNB	REVISED -	
	DRAWN ERD	REVISED -	
PLOT SCALE = 10.0000 ' / IN.	CHECKED SJP	REVISED -	
PLOT DATE = 02/04/11	DATE 02/04/2011	REVISED -	

CITY OF ROCKFORD
MORGAN STREET BRIDGE

CONSTRUCTION DETAILS – 2

SCALE: N/A | SHEET NO. 2 OF 9 SHEETS | STA. N/A | TO STA. N/A

F.A. RTE.	SECTION	COUNTY	TOTAL SHEETS	SHEET NO.
5077	99-00493-00-BR	WINNEBAGO	253	104
		CONTRACT NO. 85529		
FED. ROAD DIST. NO. 2	ILLINOIS	FED. AID PROJECT BRM-5099(65)		

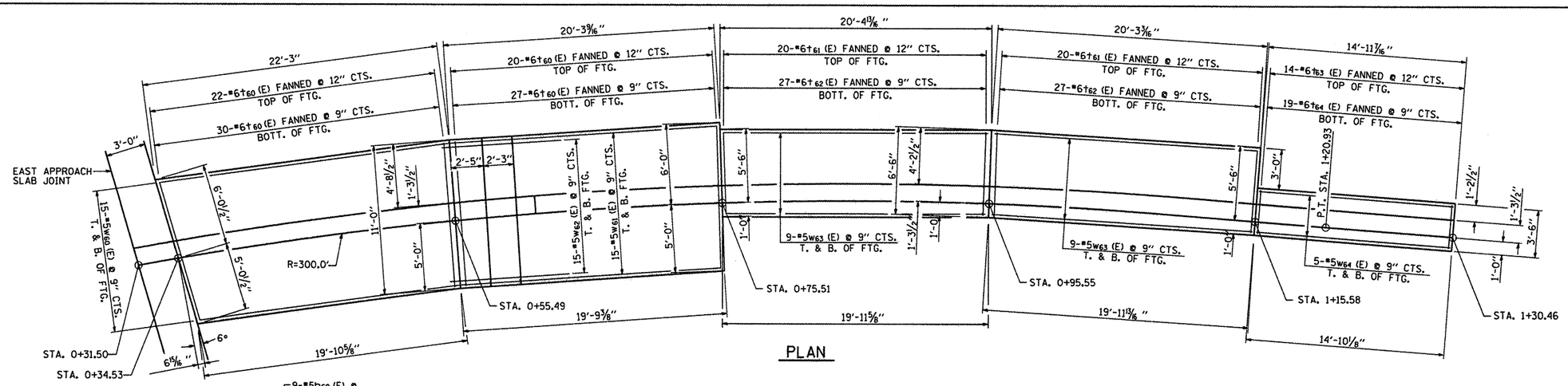

PLAN

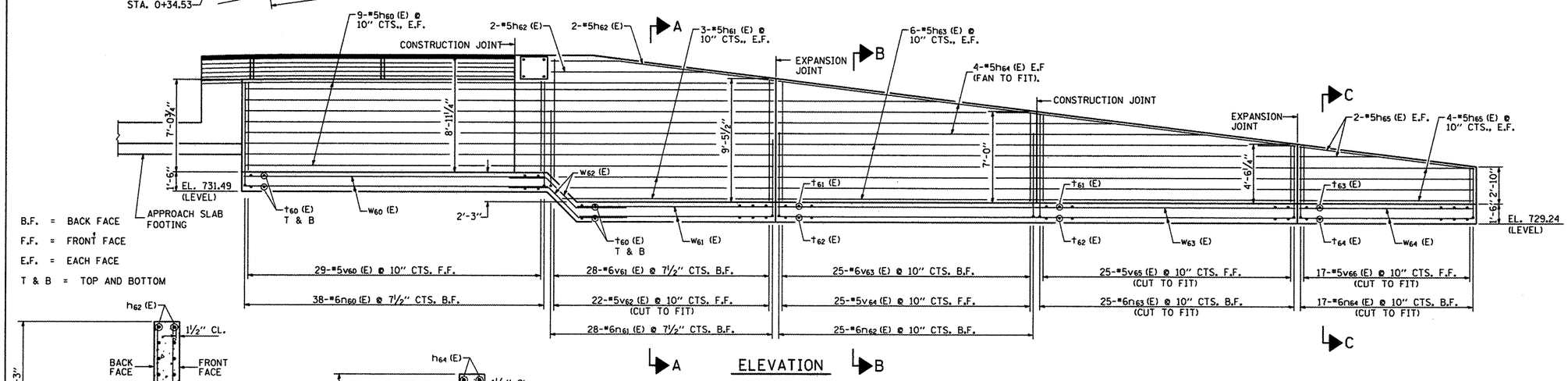

ELEVATION

B.F. = BACK FACE
F.F. = FRONT FACE
E.F. = EACH FACE
T & B = TOP AND BOTTOM

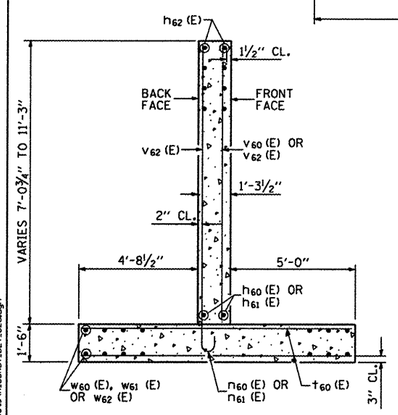

SECTION A-A

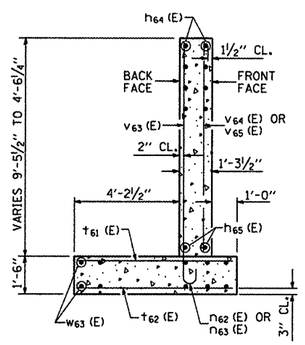

SECTION B-B

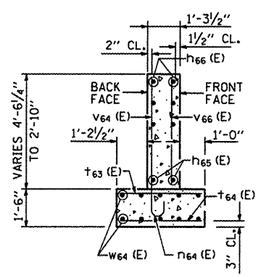

SECTION C-C

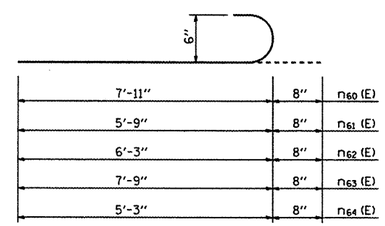

BAR n60 (E) THRU n64 (E)

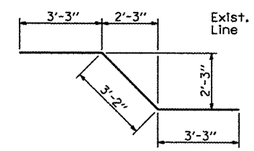

BAR w62 (E)

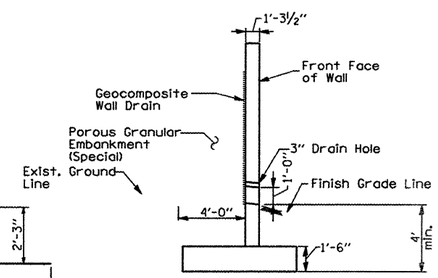

SECTION THRU CONCRETE RETAINING WALL

Looking east

WEEP HOLE SPACING SHALL BE AT ±8'-0" HORIZONTALLY

CMT CRAWFORD, MURPHY & TILLY, INC. CONSULTING ENGINEERS License No. 184-000613

USER NAME = Steve Prange	DESIGNED - SJP / MNB	REVISED -	
	DRAWN - ERD	REVISED -	
PLOT SCALE = 8.0000 ' / IN.	CHECKED - SJP	REVISED -	
PLOT DATE = 02/04/11	DATE - 02/04/2011	REVISED -	

CITY OF ROCKFORD
MORGAN STREET BRIDGE

CONSTRUCTION DETAILS – 2A

SCALE: N/A | SHEET NO. 3 OF 9 SHEETS | STA. N/A TO STA. N/A

F.A. RTE.	SECTION	COUNTY	TOTAL SHEETS	SHEET NO.
5077	99-00493-00-BR	WINNEBAGO	253	104A
		CONTRACT NO. 85529		

FED. ROAD DIST. NO. 2 | ILLINOIS | FED. AID PROJECT BRM-5099(65)

In-house Cmt:W:\826802\drawings\add_sheets\R_CONST_DET_02a.dgn

INLET SPECIAL NO. 1 & 2

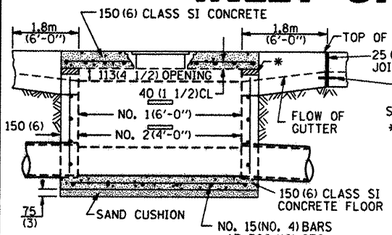

FRONT VIEW

STEPS AT 300 (12) TO 400 (16) CTS.

* THE WALL ADJUSTMENTS SHALL BE MADE WITH CONCRETE BUILDING BRICK OR CLASS SI CONCRETE.

THE HEIGHT OF THE BOX MAY BE CONSTRUCTED 150 (6) SHORT TO ALLOW FOR FIELD ADJUSTMENTS.

ALL DIMENSIONS ARE IN MILLIMETERS (INCHES) UNLESS OTHERWISE NOTED.

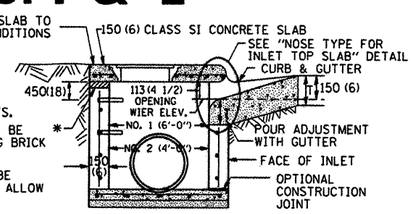

SEC. A-A

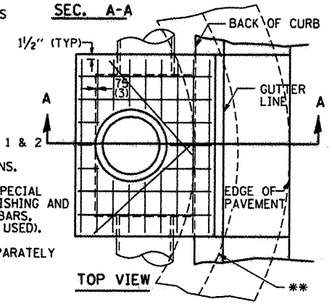

TOP VIEW

** WHEN INLET IS CONSTRUCTED IN RETURN, THE TOP OF SLAB SHALL CONFORM TO THE RADIUS OF THE RETURN.

NOTES

SEE STANDARD 602701 FOR DETAILS OF STEPS.

25 (1) PREFORMED EXPANSION JOINTS AS SHOWN SHALL BE PROVIDED ON EACH SIDE OF INLET.

CLASS SI CONCRETE OR PRECAST CONCRETE SHALL BE USED TROUGHOUT.

THE SIDE WALLS MAY BE BUILT AS PRECAST SEGMENTAL SECTIONS.

REINFORCEMENT FOR INLET SPECIAL NO. 1 & 2 SHALL BE ACCORDING TO "INLET SPECIAL NO. 1 & 2 REINFORCEMENT DETAIL"

STEPS SHALL BE OMITTED WHEN DEPTH OF INLET IS LESS THAN 1.5 m (5 ft.)

THE INLET SHALL BE CAST IN PLACE OR PRECAST.

EXCEPT AS NOTED HEREON INLET SPECIAL NO. 1 & 2 SHALL BE CONSTRUCTED IN ACCORDANCE WITH SECTION 602 OF THE STANDARD SPECIFICATIONS.

THE CONTRACT UNIT PRICE EACH FOR INLET SPECIAL NO. 1 & 2 SHALL INCLUDE THE COST OF FURNISHING AND INSTALLING THE FRAME, LID, REINFORCEMENT BARS, FLOOR AND TOP SLABS, CAST IRON STEPS (IF USED).

THE CURB AND GUTTER WILL BE PAID FOR SEPARATELY AND WILL BE MEASURED THROUGH THE INLET.

THE CURB AND GUTTER ADJACENT TO AND 1.8m (6 FT) ON EITHER SIDE OF THE INLET SHALL BE CONSTRUCTED AS SHOWN WITH NO ADDITIONAL COMPENSATION FOR THE TRANSITION.

LIGHT WEIGHT MANHOLE CASTING

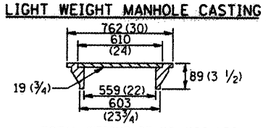

TOTAL WEIGHT 73 KG. (160 LBS.)

INLET BOX, SPECIAL

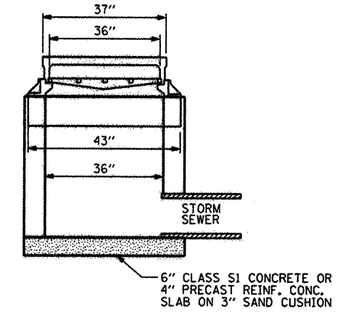

LONGITUDINAL SECTION

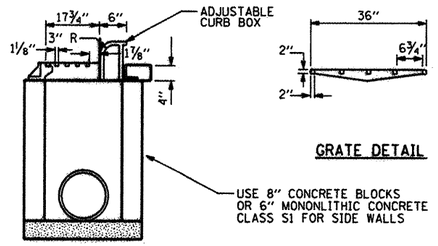

SECTION A-A

GRATE DETAIL

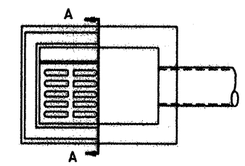

PLAN

NOTE:

FRAME & GRATE NEENAH NO. R-3246 OR APPROVED EQUAL. APPROXIMATE WEIGHT 500 LBS

NOSE TYPE FOR INLET TOP SLAB

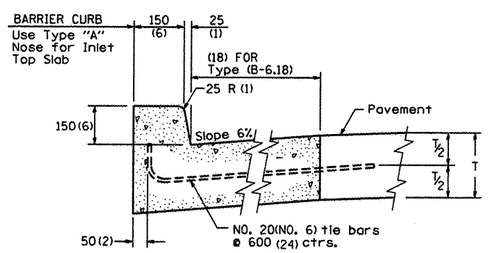

TYPE "A"

TO BE USED ON EXISTING OR PROPOSED 150 (6) BARRIER CURB

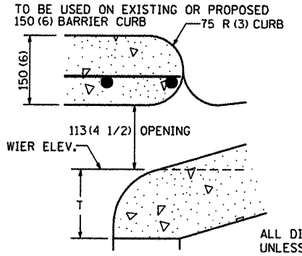

ALL DIMENSIONS ARE IN MILLIMETERS (INCHES) UNLESS OTHERWISE NOTED.

INLET SPECIAL NO. 1, 2 REINFORCEMENT DETAIL

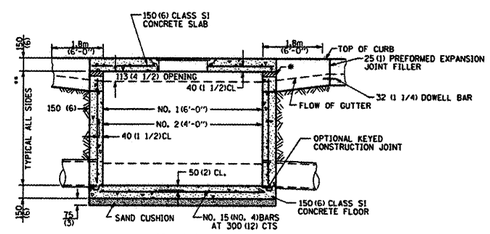

SEC. B-B

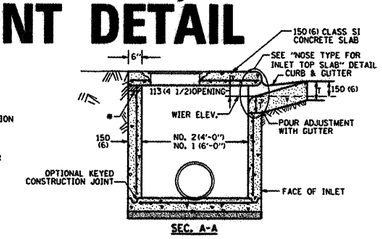

SEC. A-A

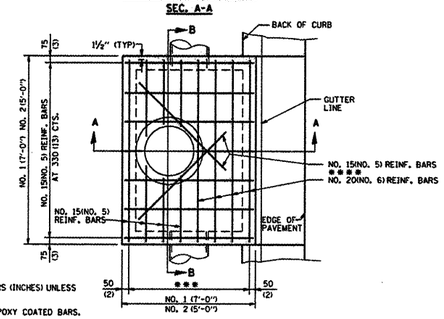

TOP VIEW

* THE WALL ADJUSTMENTS SHALL BE MADE WITH CONCRETE BUILDING BRICK OR CLASS SI CONCRETE.

THE HEIGHT OF THE BOX MAY BE CONSTRUCTED 150 (6) SHORT TO ALLOW FOR FIELD ADJUSTMENTS.

** 1.2m (4'-0") TO 2.4m (8'-0") - NO. 15 (NO. 5) REINF. BARS AT 300 (12) CTS. E.W.
2.4m (8'-0") TO 4.0m (13'-0") - NO. 15 (NO. 5) REINF. BARS AT 250 (10) CTS. E.W.
4.0m (13'-0") TO 4.6m (15'-0") - NO. 15 (NO. 5) REINF. BARS AT 200 (8) CTS. E.W.

*** 7 SPA. AT (8") INLET SPECIAL #2
10 SPA AT (8") INLET SPECIAL #1

**** 2 REBARS FOR INLET SPECIAL 1 & 2

NOTES

ALL DIMENSIONS ARE IN MILLIMETERS (INCHES) UNLESS OTHERWISE NOTED.

TOP SLAB REINFORCEMENT TO BE EPOXY COATED BARS.

I:\rockford\88258R2\d-on\sdd_sheets\R_CONST_DET_03.dgn

CMT ©Copyright CMT, Inc. CRAWFORD, MURPHY & TILLY, INC. CONSULTING ENGINEERS License No. 184-000613	USER NAME = Steve Prange	DESIGNED - SJP / MNB	REVISED -	CITY OF ROCKFORD MORGAN STREET BRIDGE	CONSTRUCTION DETAILS - 3	F.A. RTE.	SECTION	COUNTY	TOTAL SHEETS / SHEET NO.
		DRAWN - ERD	REVISED -			5077	99-00493-00-BR	WINNEBAGO	253 / 105
	PLOT SCALE = 40.0000 ' / IN.	CHECKED - SJP	REVISED -					CONTRACT NO. 85529	
	PLOT DATE = 02/04/11	DATE - 02/04/2011	REVISED -		SCALE: N/A / SHEET NO. 4 OF 9 SHEETS / STA. N/A TO STA. N/A	FED. ROAD DIST. NO. 2	ILLINOIS	FED. AID PROJECT BRM-5099(65)	

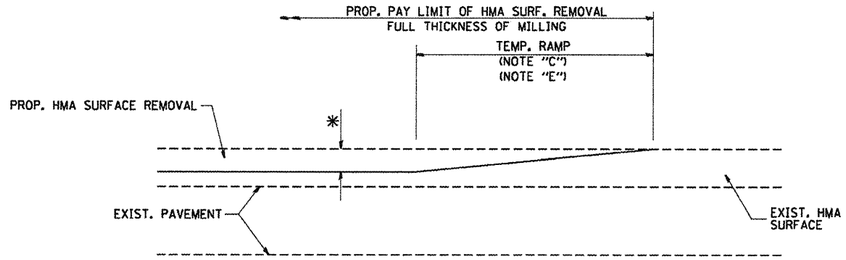

MILLED TEMPORARY RAMP

(FOR BUTT JOINT AND HMA TAPER SEE DETAIL BELOW)

OPTION 1

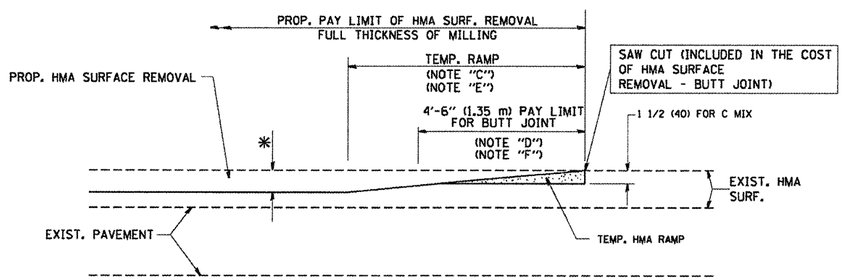

HMA CONSTRUCTED TEMPORARY RAMP

(FOR BUTT JOINT AND HMA TAPER SEE DETAIL BELOW)

OPTION 2

TYPICAL TEMPORARY RAMP

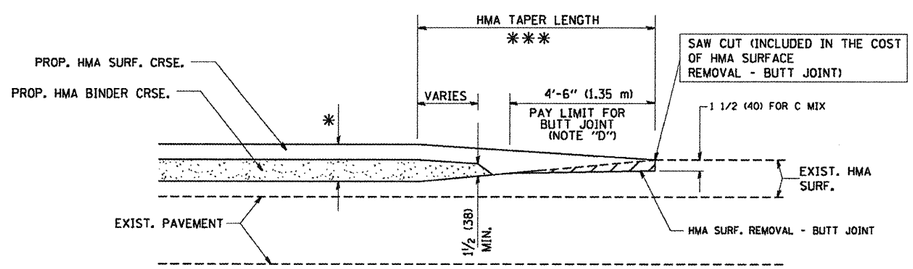

BUTT JOINT AND HMA TAPER

TYPICAL BUTT JOINT AND HMA TAPER FOR MILLING AND RESURFACING

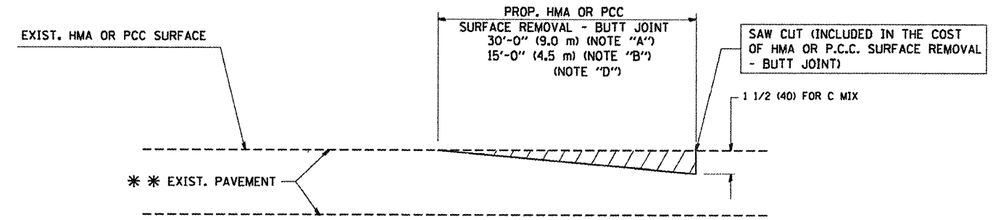

BUTT JOINT DETAIL

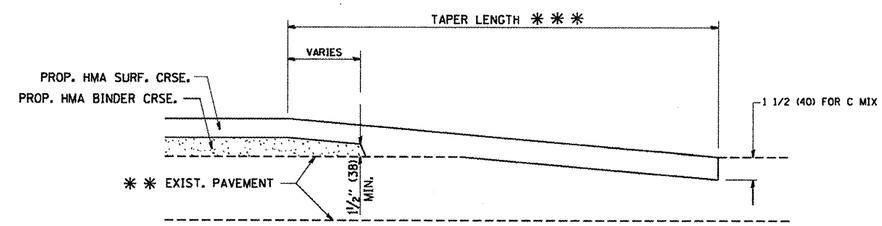

HMA TAPER DETAIL

TYPICAL BUTT JOINT AND HMA TAPER FOR RESURFACING ONLY

** PC CONCRETE, HMA OR HMA RESURFACED PAVEMENT.

NOTES

A: MAINLINE ROADWAYS AND MAJOR SIDE ROADS.

B: MINOR SIDE ROADS.

C: THE TEMP. RAMP SHALL BE CONSTRUCTED IMMEDIATELY UPON REMOVAL OF THE EXISTING HMA SURFACE.

D: THE BUTT JOINT SHALL BE CONSTRUCTED IMMEDIATELY PRIOR TO PLACING THE PROPOSED HMA COURSES.

E: TAPER THE TEMP. RAMP AT A RATE OF 3'-0" (900 mm) PER 1 INCH (25 mm) OF MILLING THICKNESS.

F: INSTALLATION AND REMOVAL OF THE 4'-6" (1.35 m) TEMP. RAMP IS INCLUDED IN COST OF HMA SURFACE REMOVAL - BUTT JOINT

G: SEE ARTICLE 406.08 AND 406.14 OF THE STANDARD SPECIFICATIONS FOR "HMA AND/OR PCC SURFACE REMOVAL, BUTT JOINT".

* SEE TYPICAL SECTIONS FOR MILLING THICKNESS.

*** 20'-0" (6.1 m) PER 1 (25) RESURFACING (NOTE "A")
10'-0" (3.0 m) PER 1 (25) RESURFACING (NOTE "B")

BASIS OF PAYMENT:

THE BUTT JOINT WILL BE PAID FOR AT THE CONTRACT UNIT PRICE PER SQUARE YARD (SQUARE METER) FOR "HOT-MIX ASPHALT SURFACE REMOVAL - BUTT JOINT" OR FOR "PORTLAND CEMENT CONCRETE SURFACE REMOVAL- BUTT JOINT".

ALL DIMENSIONS ARE IN INCHES (MILLIMETERS) UNLESS OTHERWISE SHOWN.

CMT
CRAWFORD, MURPHY & TILLY, INC.
CONSULTING ENGINEERS
License No. 184-000613

USER NAME = Steve Prange	DESIGNED - SJP / MNB	REVISED -	
	DRAWN - ERD	REVISED -	
PLOT SCALE = 40.0000 ' / IN.	CHECKED - SJP	REVISED -	
PLOT DATE = 02/04/11	DATE - 02/04/2011	REVISED -	

CITY OF ROCKFORD
MORGAN STREET BRIDGE

CONSTRUCTION DETAILS - 4

SCALE: N/A | SHEET NO. 5 OF 9 SHEETS | STA. N/A | TO STA. N/A

F.A. RTE.	SECTION	COUNTY	TOTAL SHEETS	SHEET NO.
5077	99-00493-00-BR	WINNEBAGO	253	106

CONTRACT NO. 85529

FED. ROAD DIST. NO. 2 | ILLINOIS | FED. AID PROJECT BRM-5099(65)

I:\rock for-01\8026802\dgn\cadd_sheets\R_CONST_DET_04.dgn

FRAME EXTENSION INTO PAVEMENT	INNER HOOP REINFORCEMENT DIAMETER	SEMI CIRCULAR FORM DIAMETER	OUTER HOOP REINFORCEMENT DIAMETER
UP TO 8" (200)	3'-6" (1.1 m)	4'-0" (1.2 m)	5'-0" (1.5 m)
> 8" (200) TO 14" (360)	4'-0" (1.2 m)	4'-6" (1.4 m)	5'-0" (1.5 m)

DESIGNER NOTE:
THIS DETAIL IS TO BE USED WHEN THE GUTTER FLAG IS LESS THAN 24"

NOTES :

1. THE ROUNDOUT AND ADDED REINFORCEMENT WILL NOT BE PAID SEPARATELY, BUT SHALL BE INCLUDED IN THE CONTRACT UNIT PRICE FOR THE PAVEMENT.
2. TRANSVERSE JOINTS MAY BE MOVED TO ACCOMMODATE ROUNDOUT. EDGE OF CIRCULAR JOINT SHALL BE MINIMUM 12" (300) FROM TRANSVERSE JOINT. RELOCATED TRANSVERSE JOINT SHALL BE CONTINUOUS FROM EDGE OF PAVEMENT TO EDGE OF PAVEMENT.
3. SEMI-CIRCULAR FORM SHALL BE REMOVED PRIOR TO DRILL AND GROUT OF TIE BARS.
4. ALL REINFORCED BARS SHALL BE EPOXY COATED.
5. DRILL AND GROUT IS PREFERRED, HOWEVER TIE BARS CAN BE POURED IN PLACE IF CLEARANCE IS PROVIDED TO OUTER EDGE OF FRAME. MINIMUM 2" (50) CLEARANCE.
6. WOOD SHIMS SHALL BE USED TO ADJUST ALL FRAMES. AFTER ADJUSTING MORTAR HAS CURED, THE WOOD SHIMS SHALL BE REMOVED AND THE VOIDS UNDER THE FRAMES FILLED WITH NON SHRINK GROUT.
7. HOOP REINFORCEMENT SHALL BE ONE PIECE CONSTRUCTION.
8. CIRCULAR FRAMES AND GRATES MAY BE SUBSTITUTED.
9. CURB DOWELS MUST BE PLACED LEVEL & TRUE TO ALLOW CONTRACTION MOVEMENT.

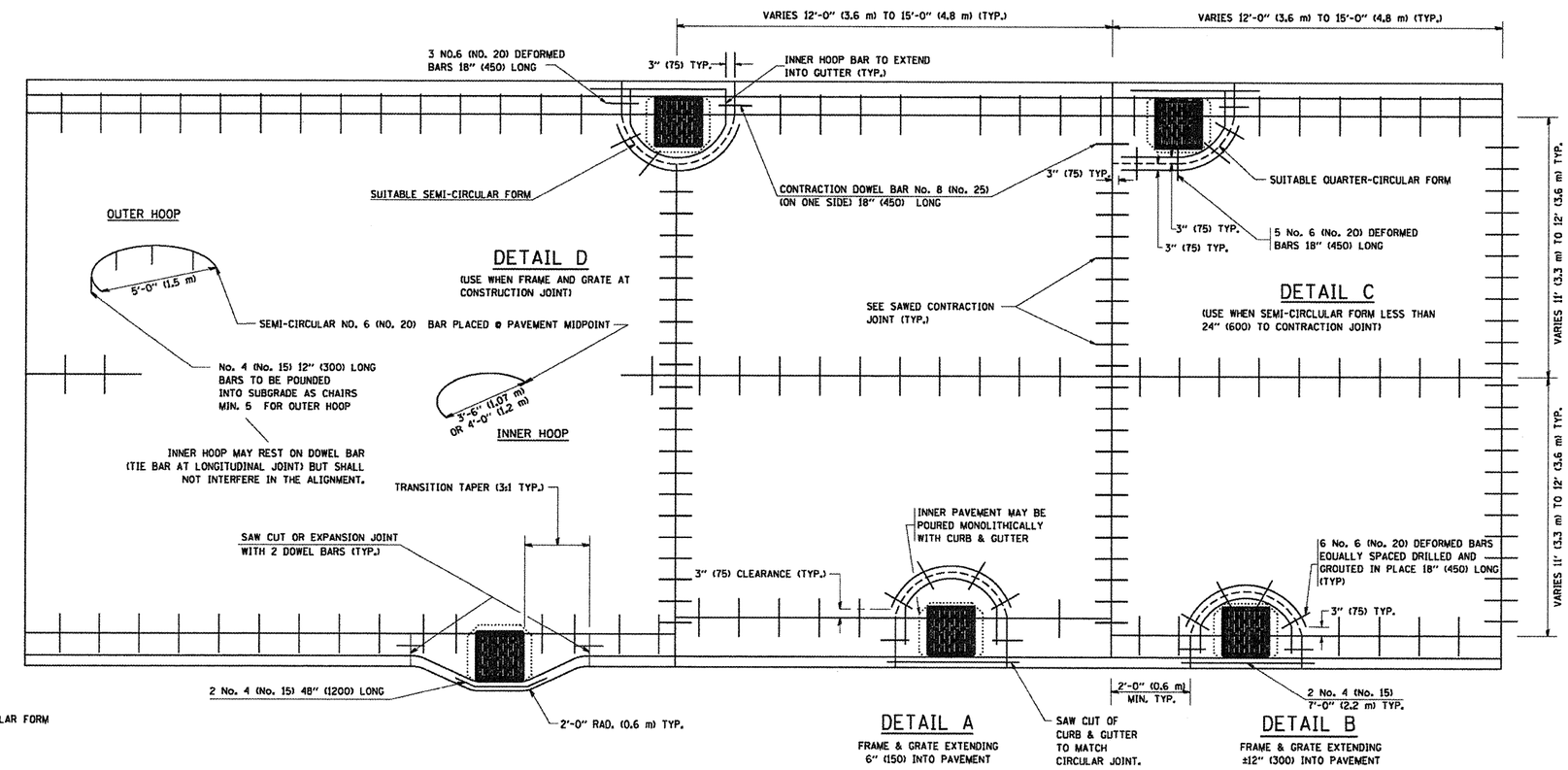

TRANSITION CURB & AND GUTTER INTO PARKWAY

ALL DIMENSIONS ARE IN INCHES (MILLIMETERS) UNLESS OTHERWISE NOTED

L:\ROCKFORD\0828082\Dgns\CADD_Sheets\VL_CONST_DET_05.dgn

CMT ©Copyright CMT, Inc.
CRAWFORD, MURPHY & TILLY, INC.
CONSULTING ENGINEERS
License No. 184-000613

USER NAME = Steve Prange	DESIGNED - SJP / MNB	REVISED -	
	DRAWN - ERD	REVISED -	
PLOT SCALE = 40.0000 ' / IN.	CHECKED - SJP	REVISED -	
PLOT DATE = 02/04/11	DATE - 02/04/2011	REVISED -	

CITY OF ROCKFORD
MORGAN STREET BRIDGE

CONSTRUCTION DETAILS - 5

SCALE: N/A | SHEET NO. 6 OF 9 SHEETS | STA. N/A | TO STA. N/A

F.A. RTE.	SECTION	COUNTY	TOTAL SHEETS	SHEET NO.
5077	99-00493-00-BR	WINNEBAGO	253	107

CONTRACT NO. 85529

FED. ROAD DIST. NO. 2 | ILLINOIS | FED. AID PROJECT BRM-5099(65)

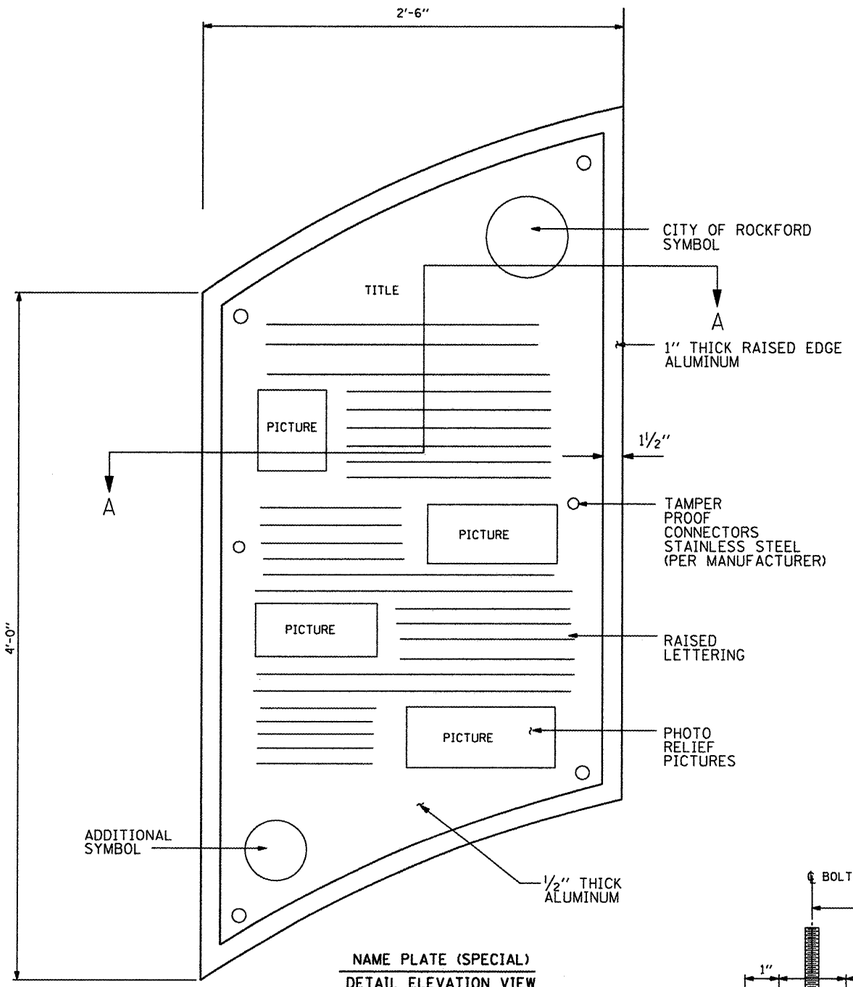

NAME PLATE (SPECIAL)
DETAIL ELEVATION VIEW

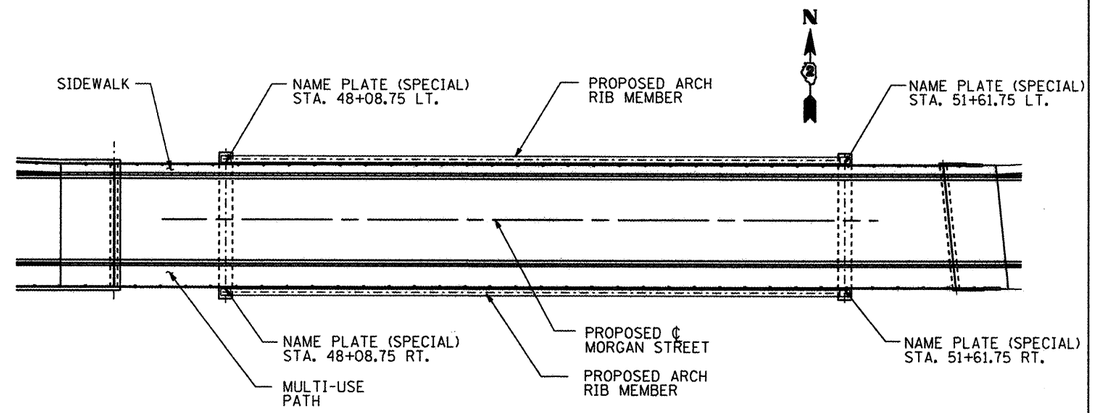

PLAN VIEW

STATIONS REPRESENT CENTER OF PLAQUE

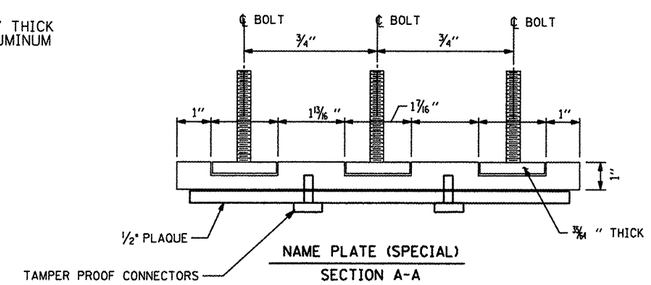

NAME PLATE (SPECIAL)
SECTION A-A

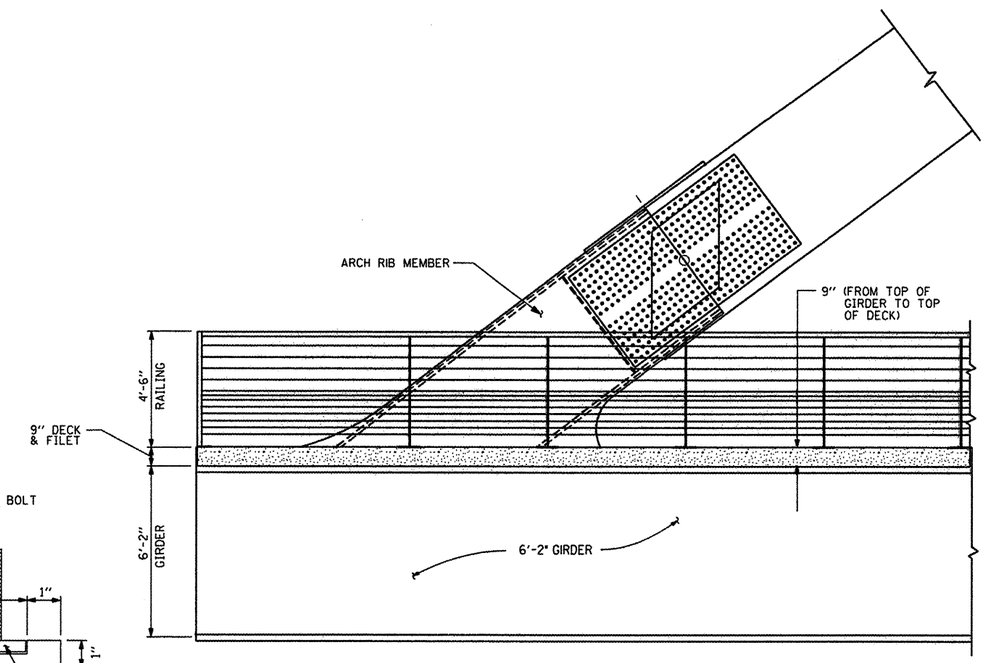

NAME PLATE (SPECIAL)
ELEVATION VIEW FROM SIDEWALK (LOOKING NORTH)

CMT ©Copyright CMT, Inc. CRAWFORD, MURPHY & TILLY, INC. CONSULTING ENGINEERS License No. 184-000613	USER NAME = Steve Prange	DESIGNED - SJP / MNB	REVISED -	CITY OF ROCKFORD MORGAN STREET BRIDGE	CONSTRUCTION DETAILS - 6	F.A. RTE.	SECTION	COUNTY	TOTAL SHEETS / SHEET NO.
		DRAWN - ERD	REVISED -			5077	99-00493-00-BR	WINNEBAGO	253 / 108
	PLOT SCALE = 40.0000 ' / IN.	CHECKED - SJP	REVISED -					CONTRACT NO. 85529	
	PLOT DATE = 02/04/11	DATE - 02/04/2011	REVISED -		SCALE: N/A / SHEET NO. 7 OF 9 SHEETS / STA. N/A / TO STA. N/A	FED. ROAD DIST. NO. 2	ILLINOIS	FED. AID PROJECT BRM-5099(65)	

I:\rockford\082680\dgns\cadd_sheets\R_CONST_DET_06.dgn

NOTES:
1. SEE SHEET 149 & 149A FOR RAILING DETAILS.

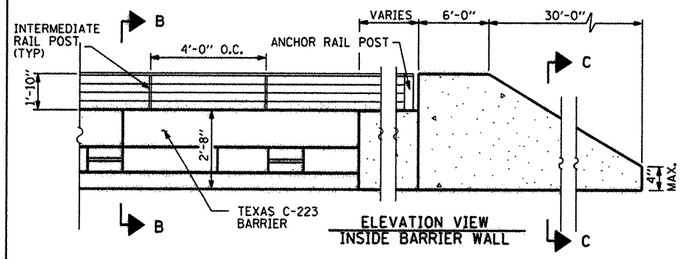

ELEVATION VIEW
INSIDE BARRIER WALL

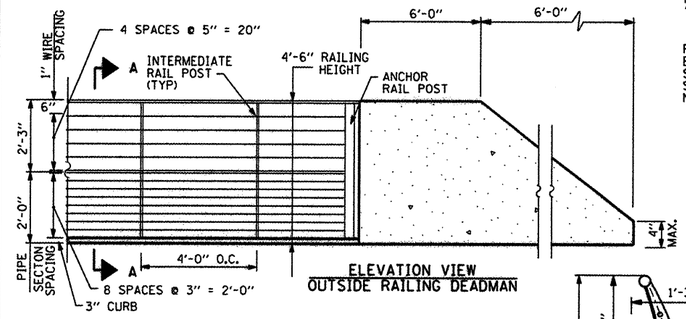

ELEVATION VIEW
OUTSIDE RAILING DEADMAN

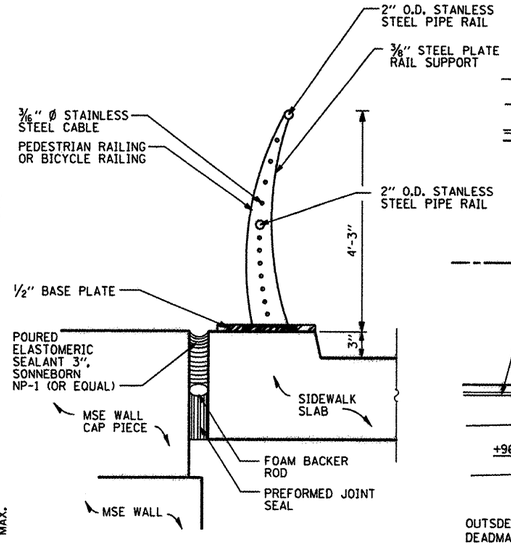

SECTION A-A
FULL HEIGHT RAILING OFF-BRIDGE

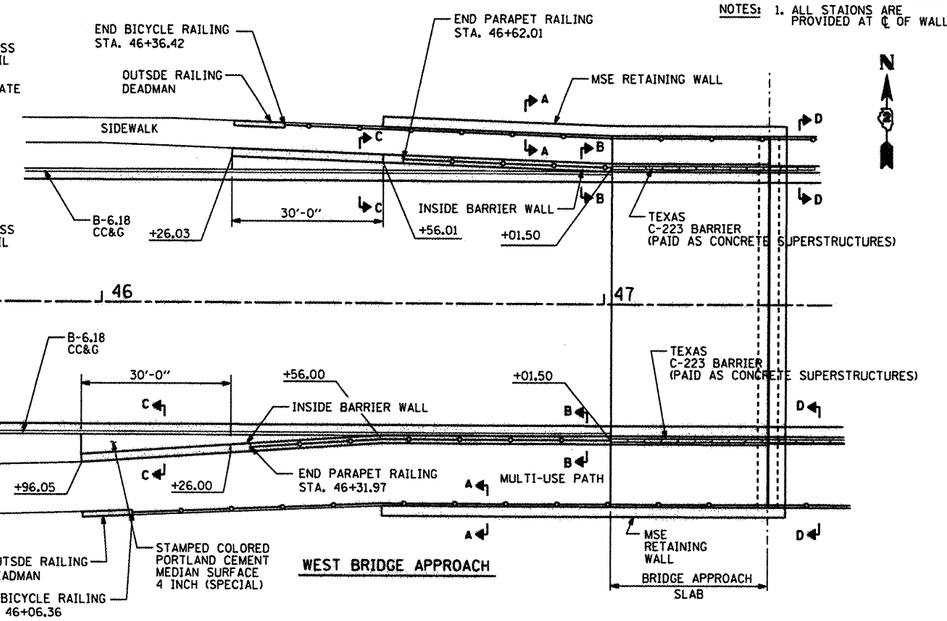

WEST BRIDGE APPROACH

NOTES: 1. ALL STAIONS ARE PROVIDED AT ℄ OF WALL

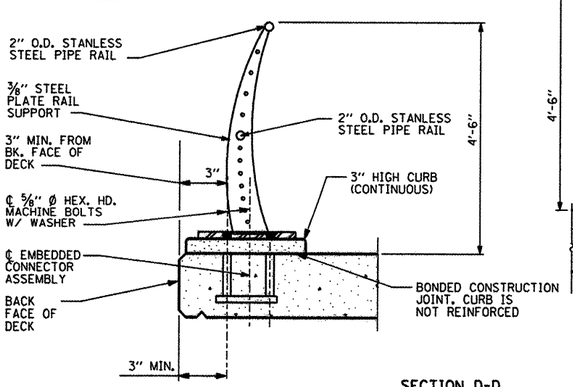

SECTION D-D
PARAPET MOUNTED RAILING

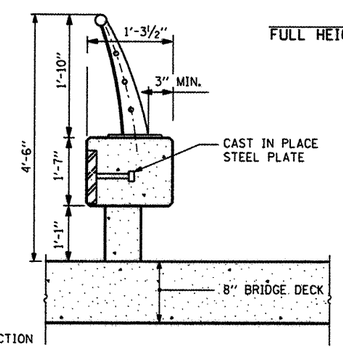

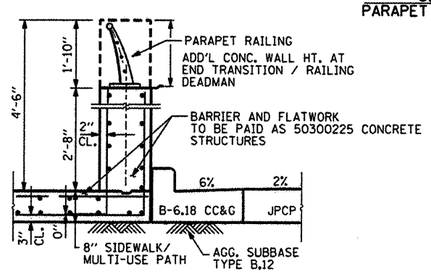

DETAIL B-B

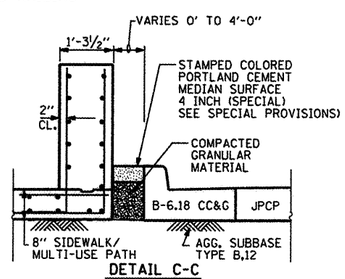

DETAIL C-C

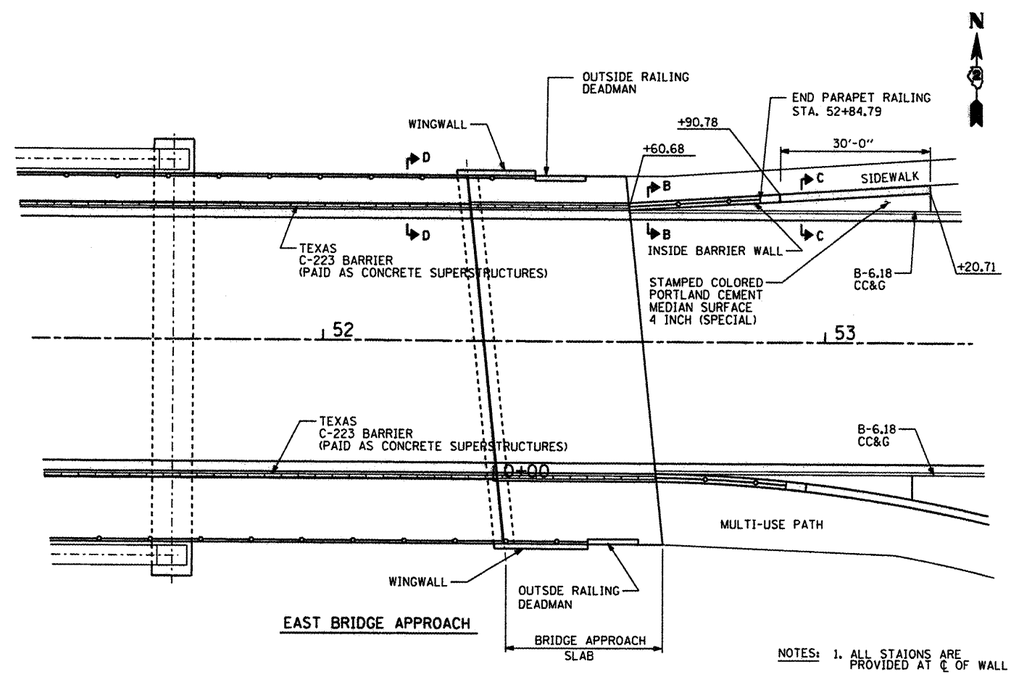

EAST BRIDGE APPROACH

NOTES: 1. ALL STAIONS ARE PROVIDED AT ℄ OF WALL

I:\rock for\0836882\dwgs\cadd_sheets\R_CONST_DET_07.dgn

CMT CRAWFORD, MURPHY & TILLY, INC. CONSULTING ENGINEERS License No. 184-000613 ©Copyright CMT, Inc.	USER NAME = Steve Prange	DESIGNED - SJP / MNB	REVISED -	CITY OF ROCKFORD MORGAN STREET BRIDGE
		DRAWN - ERD	REVISED -	
	PLOT SCALE = 40.0000 ' / IN.	CHECKED - SJP	REVISED -	
	PLOT DATE = 02/04/11	DATE - 02/04/2011	REVISED -	

CONSTRUCTION DETAILS - 7

SCALE: N/A | SHEET NO. 8 OF 9 SHEETS | STA. N/A TO STA. N/A

F.A. RTE.	SECTION	COUNTY	TOTAL SHEETS	SHEET NO.
5077	99-00493-00-BR	WINNEBAGO	253	109
		CONTRACT NO. 85529		
FED. ROAD DIST. NO. 2	ILLINOIS	FED. AID PROJECT BRM-5099(65)		

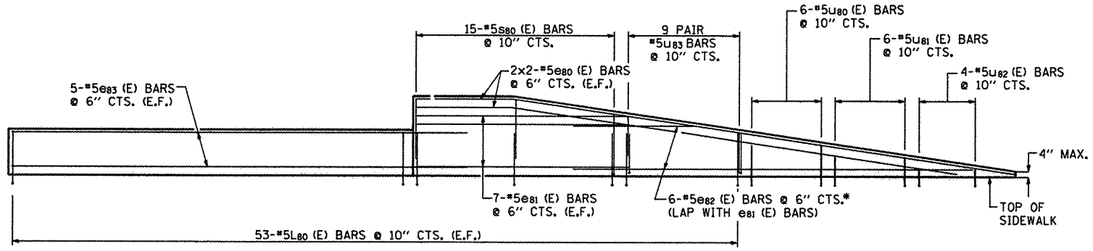

NORTHEAST WALL ELEVATION
INSIDE BARRIER WALL

*ORDER e82 (E) BARS FULL LENGTH. CUT AS SHOWN IN FIELD CUTTING DIAGRAM AND USE REMAINDER IN OPPOSITE FACE OF WALL.

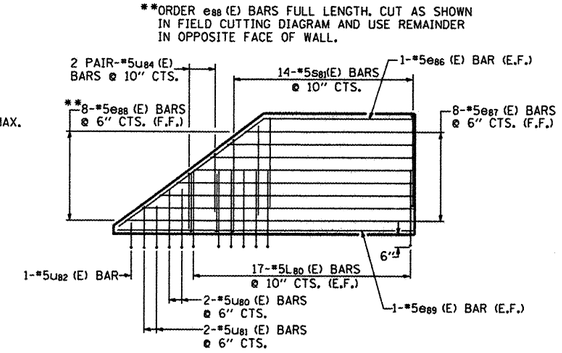

OUTSIDE RAILING DEADMAN

BILL OF MATERIAL

BAR	NO.	SIZE	LENGTH	SHAPE
e80 (E)	12	#5	20'-0"	
e81 (E)	42	#5	12'-9"	
e82 (E)	18	#5	30'-11"	
e83 (E)	10	#5	27'-2"	
e84 (E)	10	#5	42'-7"	
e85 (E)	20	#5	38'-0"	
e86 (E)	8	#5	13'-1"	
e87 (E)	64	#5	6"	
e88 (E)	32	#5	14'-10"	
e89 (E)	8	#5	11'-8"	
L80 (E)	598	#5	5'-0"	L
s80 (E)	45	#5	9'-9"	
s81 (E)	56	#5	10'-3"	
u80 (E)	26	#5	9'-7"	
u81 (E)	26	#5	8'-3"	
u82 (E)	16	#5	6'-11"	
u83 (E)	54	#5	5'-5"	
u84 (E)	16	#5	5'-8"	

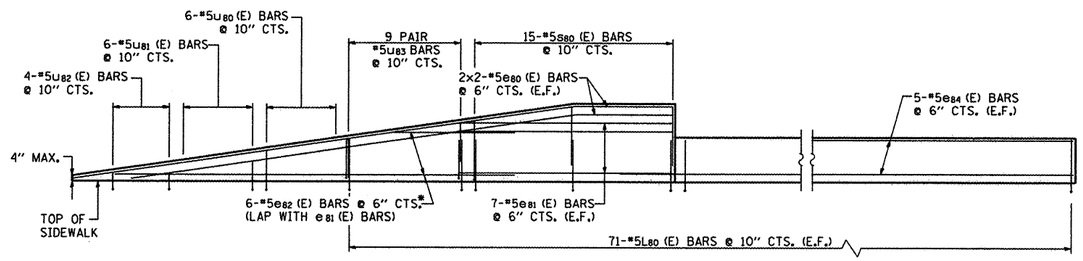

NORTHWEST WALL ELEVATION
INSIDE BARRIER WALL

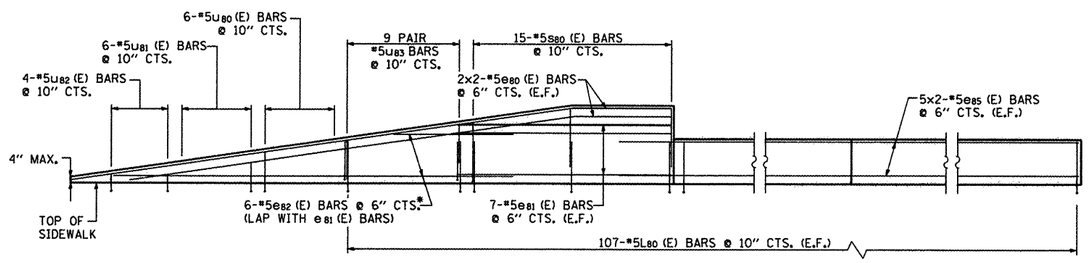

SOUTHWEST WALL ELEVATION
INSIDE BARRIER WALL

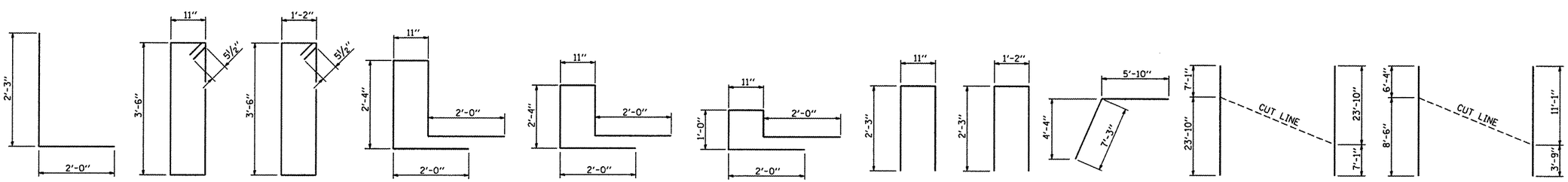

CMT ©Copyright CMT, Inc. CRAWFORD, MURPHY & TILLY, INC. CONSULTING ENGINEERS License No. 184-000613	USER NAME = Steve Prange	DESIGNED - SJP / MNB	REVISED -
		DRAWN - ERD	REVISED -
	PLOT SCALE = 0.0000 ' / IN.	CHECKED - SJP	REVISED -
	PLOT DATE = 02/04/11	DATE - 02/04/2011	REVISED -

CITY OF ROCKFORD
MORGAN STREET BRIDGE

CONSTRUCTION DETAILS - 7A

SCALE: N/A | SHEET NO. 9 OF 9 SHEETS | STA. N/A TO STA. N/A

F.A. RTE.	SECTION	COUNTY	TOTAL SHEETS	SHEET NO.
5077	99-00493-00-BR	WINNEBAGO	253	109A

CONTRACT NO. 85529

FED. ROAD DIST. NO. 2 | ILLINOIS | FED. AID PROJECT BRM-5099(65)

I:\rockford\826802\dgn\cadd_sheets\R_CONST_DET_07a.dgn

109A

SANITARY NOTES:

1. ALL WORK WITHIN THE PUBLIC RIGHT-OF-WAY SHALL BE PERFORMED IN ACCORDANCE WITH THE STANDARD SPECIFICATIONS FOR ROAD AND BRIDGE CONSTRUCTION IN ILLINOIS (CURRENT EDITION), AND THE REQUIREMENTS OF ILLINOIS D.O.T. AND THE CITY OF ROCKFORD, DEPARTMENT OF PUBLIC WORKS.
2. THE ILLINOIS D.O.T., THE CITY OF ROCKFORD, THE R.R.W.R.D. AND ALL PROPERTY OWNERS SHALL BE CONTACTED 48 HOURS MINIMUM, PRIOR TO CONSTRUCTION.
3. THE SANITARY SEWER SHALL BE CONSTRUCTED IN ACCORDANCE WITH THE STANDARD SPECIFICATIONS FOR WATER AND SEWER MAIN CONSTRUCTION IN ILLINOIS (CURRENT EDITION), AND THE REQUIREMENTS OF THE R.R.W.R.D.
4. ALL MANHOLE DEPTHS AND PROPOSED MANHOLE RIM ELEVATIONS MUST BE FIELD VERIFIED PRIOR TO CONSTRUCTION.
5. SEWER MAIN AND SERVICE LOCATIONS ARE APPROXIMATE AND MAY BE ALTERED AS THE CONDITIONS WARRANT. ALTERED MAIN OR SERVICE ALIGNMENTS MUST REMAIN DEEP ENOUGH TO PROVIDE GRAVITY SERVICE TO THE LOWEST LEVEL OF THE STRUCTURE ON THE PARCEL SERVED. REVISED SERVICE ALIGNMENTS SHALL REMAIN WITHIN THE LIMITS OF THE PARCEL SERVED.
6. ALL SANITARY SEWER PIPE SHALL BE PVC (WMO/SDR 26), PER ASTM D-2241 WITH ASTM D-3139 JOINTS. PIPE BEDDING FOR SANITARY SEWER MAINS AND SERVICES SHALL BE CLASS 1A, PER ASTM D-2321-74.
7. ALL WORK SHALL COMPLY WITH I.E.P.A. STANDARDS AND SPECIFICATIONS FOR SOIL EROSION AND SEDIMENT CONTROL.
8. UPON COMPLETION OF CONSTRUCTION, ALL MANHOLE CASTINGS SHALL BE EXPOSED AND SET TO FINAL GRADE.
9. NEW SANITARY MANHOLES SHALL BE VACUUM TESTED IN ACCORDANCE WITH ASTM C1244.
10. ALL SANITARY SEWER SHALL BE AIR AND DEFLECTION TESTED PER RRWRD REQUIREMENTS.
11. A RRWRD INSPECTOR MUST BE PRESENT AT ALL TIMES FOR ALL SANITARY SEWER CONSTRUCTION.
12. TRENCH BACKFILL FOR ALL SANITARY SEWER REMOVAL SHALL BE INCLUDED IN THE COST FOR SANITARY REMOVAL ITEMS.

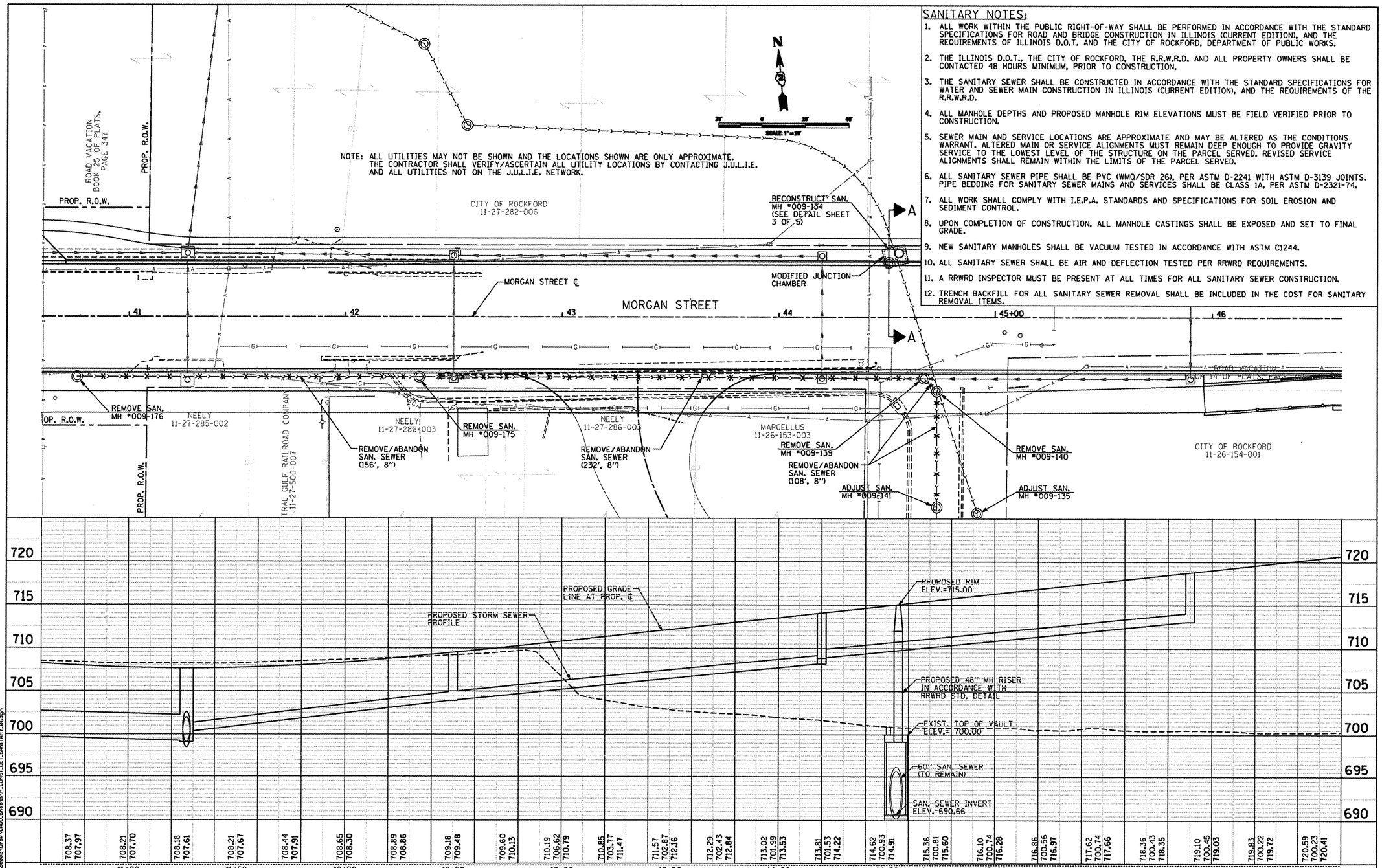

PLAN — SURVEYED / PLOTTED / ALIGNMENT CHECKED / TIES & BENCHMARKS CHECKED / CADD FILE NAME — NOTE BOOK NO. ____ — BY — DATE

PROFILE — SURVEYED / PLOTTED / GRADES CHECKED / BENCHMARKS / STRUCTURE NOTATNS CHKD — NOTE BOOK NO. ____ — BY — DATE

L:\ROCKFORD\08286002\Dgn\CADD_Sheets\R_CONST_DET_SANITARY_01.dgn

CMT — CRAWFORD, MURPHY & TILLY, INC. CONSULTING ENGINEERS License No. 184-000663 — ©Copyright CMT, Inc.

USER NAME = Steve Prange	DESIGNED SJP / MNB	REVISED -	
	DRAWN ERD	REVISED -	
PLOT SCALE = 40.0000 ' / IN.	CHECKED SJP	REVISED -	
PLOT DATE = 02/04/11	DATE 02/04/2011	REVISED -	

CITY OF ROCKFORD
MORGAN STREET BRIDGE

PROPOSED SANITARY SEWER RELOCATION
MORGAN STREET /COLLEGE AVENUE

SCALE: 1" = 20' | SHEET NO. 1 OF 5 SHEETS | STA. 40+60 TO STA. 46+60

F.A. RTE.	SECTION	COUNTY	TOTAL SHEETS	SHEET NO.
5077	99-00493-00-BR	WINNEBAGO	253	110

CONTRACT NO. 85529

FED. ROAD DIST. NO. 2 | ILLINOIS | FED. AID PROJECT BRM-5099(65)

NOTES:

1. PROPOSED SOUTH INVERT IS 729.56. CLEAN EXISTING SANITARY MANHOLE AND FILL BOTTOM WITH CLSM TO ELEVATION 728.56. ALL COSTS ASSOCIATED WITH INSTALLING PROPOSED SERVICE LINE AND FILLING EXISTING SANITARY MANHOLE WITH CLSM SHALL BE INCLUDED IN THE CONTRACT UNIT COST FOR SANITARY SEWER SERVICE. 6" PVC, COMPLETE.

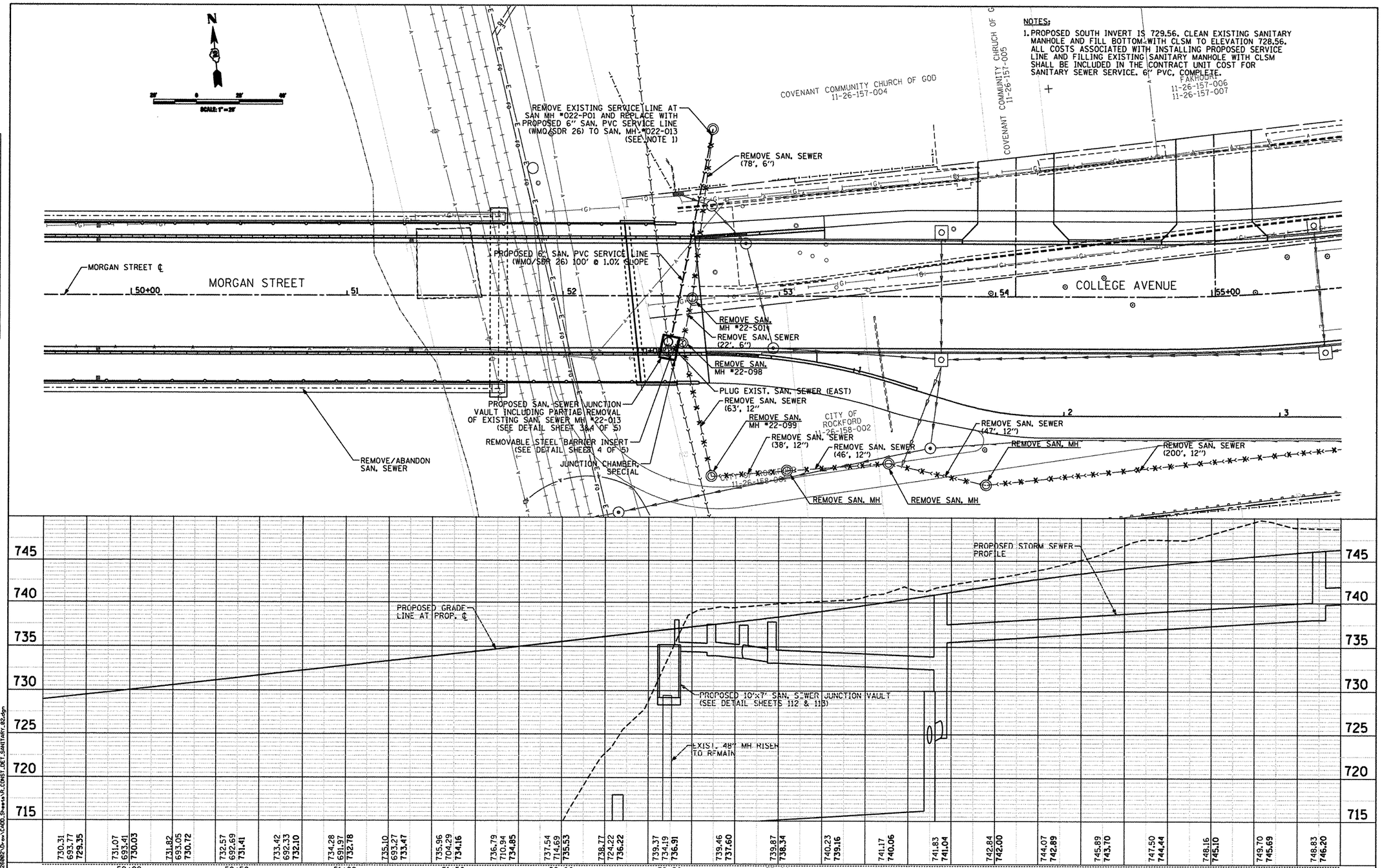

PLAN
SURVEYED
PLOTTED
ALIGNMENT CHECKED
TIES AND R/W CHECKED
CADD FILE NAME
NOTE BOOK
NO.
BY
DATE

PROFILE
SURVEYED
PLOTTED
GRADES CHECKED
BENCHMARKS
STRUCTURE NOTATIONS CHKD
NOTE BOOK
NO.
BY
DATE

L:\ROCKFORD\B226982\Dr-sv\CADD_Sheets\R_CONST_DET_SANITARY_B2.dgn

CMT
CRAWFORD, MURPHY & TILLY, INC.
CONSULTING ENGINEERS
License No. 184-000613
©Copyright CMT, Inc.

USER NAME = Steve Prange	DESIGNED SJP / MNB	REVISED -	
	DRAWN ERD	REVISED -	
PLOT SCALE = 40.0000 ' / IN.	CHECKED SJP	REVISED -	
PLOT DATE = 02/04/11	DATE 02/04/2011	REVISED -	

CITY OF ROCKFORD
MORGAN STREET BRIDGE

PROPOSED SANITARY SEWER RELOCATION
MORGAN STREET /COLLEGE AVENUE

SCALE: 1" = 20' | SHEET NO. 2 OF 5 SHEETS | STA. 49+60 TO STA. 55+60

F.A. RTE.	SECTION	COUNTY	TOTAL SHEETS	SHEET NO.
5077	99-00493-00-BR	WINNEBAGO	253	111

CONTRACT NO. 85529

FED. ROAD DIST. NO. 2 | ILLINOIS | FED. AID PROJECT BRM-5099(65)

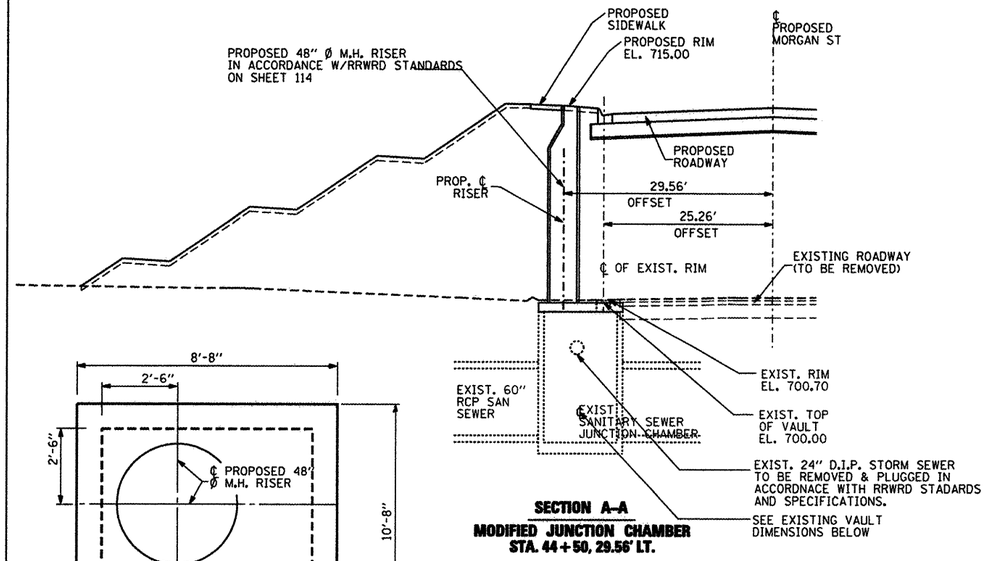

SECTION A-A
MODIFIED JUNCTION CHAMBER
STA. 44+50, 29.56' LT.

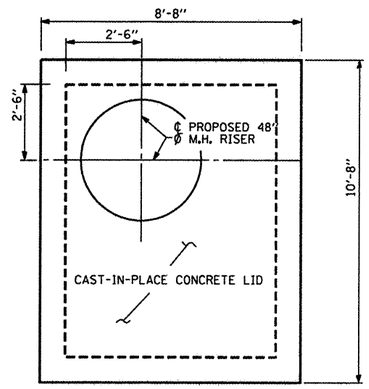

PROPOSED CAST-IN-PLACE CONCRETE LID
TOP VIEW

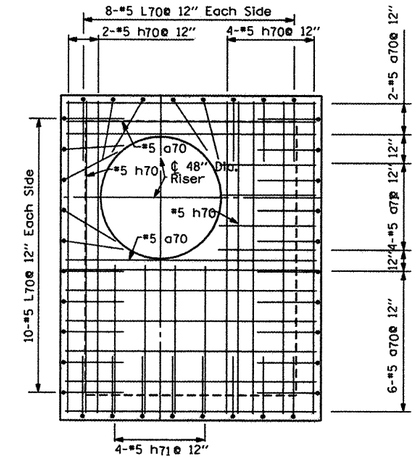

TOP OF TOP SLAB

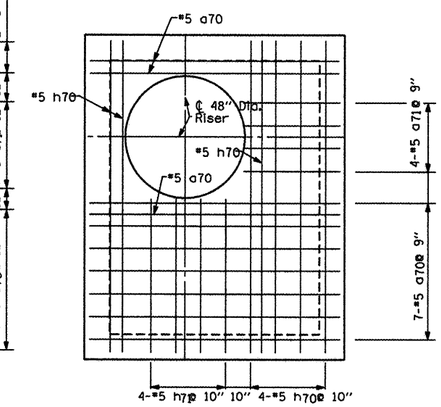

BOTTOM OF TOP SLAB

PROPOSED MODIFIED JUNCTION VAULT
CAST-IN-PLACE CONCRETE LID REINFORCEMENT
TOP VIEW

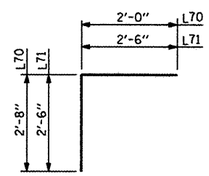

BAR L70& L71

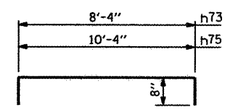

BAR h73& h75

MODIFIED JUNCTION CHAMBER
BILL OF MATIERIALS

Bar	No.	Size	Length	Shape
a70	20	#5	8'-4"	
a71	8	#5	3'-0"	
h70	15	#5	39'-0"	
h71	8	#5	39'-0"	
h72	6	#4	8'-4"	
h73	6	#4	9'-8"	
h74	6	#4	10'-4"	
h75	6	#4	11'-8"	
L70	36	#5	4'-8"	
L71	12	#4	5'-0"	
Structure Excavation			Cu. Yd.	46
Concrete Structures			Cu. Yd.	5.3
Reinforcement Bars			Pound	1,510

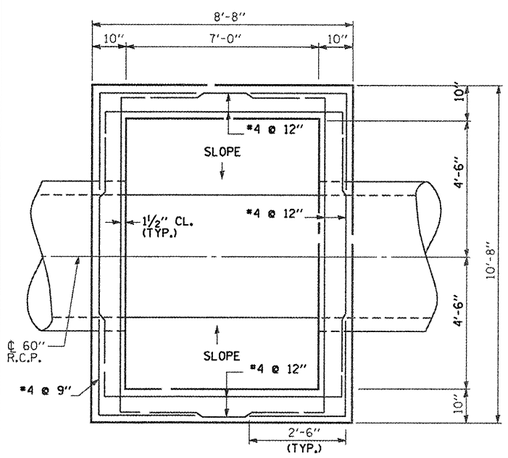

EXISTING JUNCTION VAULT
PLAN VIEW

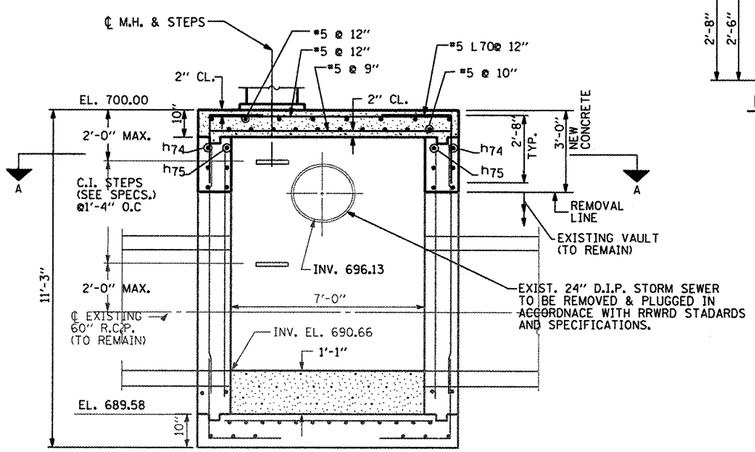

PROPOSED MODIFIED JUNCTION VAULT
SECTION VIEW

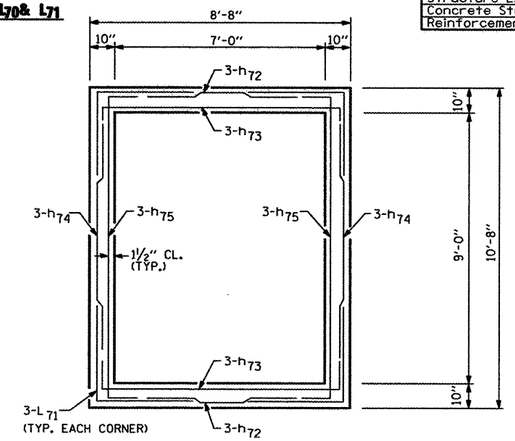

SECTION A-A

L:\DOCS\FDRD\08260802\D-ex\CADD.Sheets\R_CONST_DET_SANITARY_03.dgn

CMT CRAWFORD, MURPHY & TILLY, INC. CONSULTING ENGINEERS License No. 184-000613 ©Copyright CMT, Inc.

USER NAME = Steve Prenge	DESIGNED - SJP / MNB	REVISED -	
	DRAWN - ERD	REVISED -	
PLOT SCALE = 40.0000 ' / IN.	CHECKED - SJP	REVISED -	
PLOT DATE = 02/04/11	DATE - 02/04/2011	REVISED -	

CITY OF ROCKFORD
MORGAN STREET BRIDGE

PROPOSED SANITARY SEWER RELOCATION
CONSTRUCTION DETAILS

SCALE: N/A | SHEET NO. 3 OF 5 SHEETS | STA. TO STA.

F.A. RTE.	SECTION	COUNTY	TOTAL SHEETS	SHEET NO.
5077	99-00493-00-BR	WINNEBAGO	253	112
		CONTRACT NO. 85529		

FED. ROAD DIST. NO. 2 | ILLINOIS | FED. AID PROJECT BRM-5099(65)

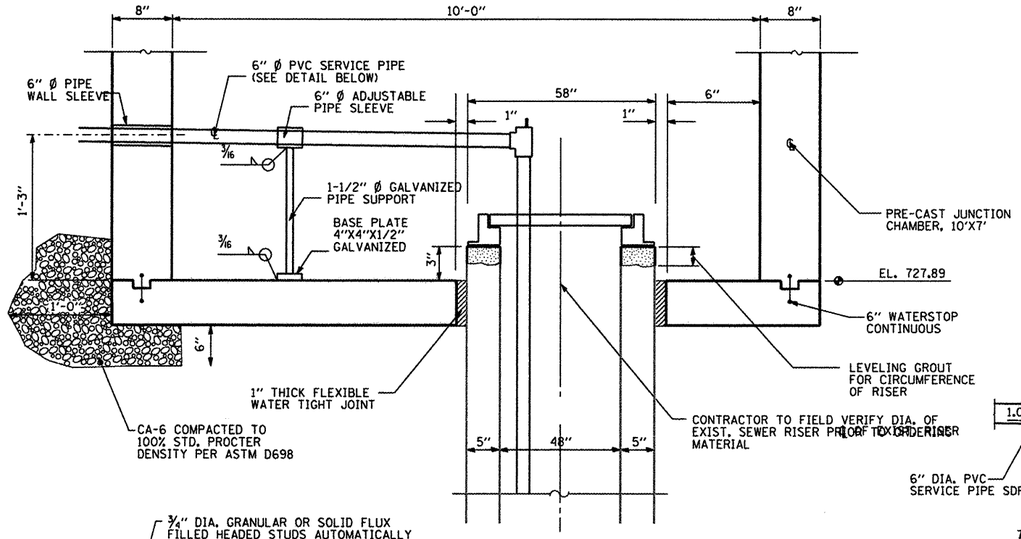

JUNCTION CHAMBER, SPECIAL
TYPICAL SECTION @ BASE 10' X 7'
(SEE ADDITIONAL DETAILS ON SHEET 113)

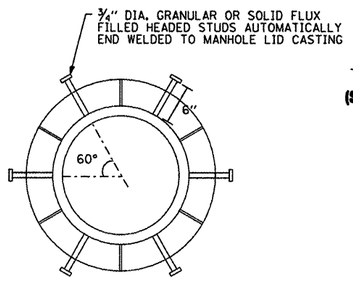

MANHOLE CASTING THROUGH APPROACH SLAB
SECTION A–A

JUNCTION CHAMBER, SPECIAL
BILL OF MATIERIALS

STRUCTURE EXCAVATION	CU. YD.	113
JUNCTION CHAMBER, SPECIAL	EACH	1

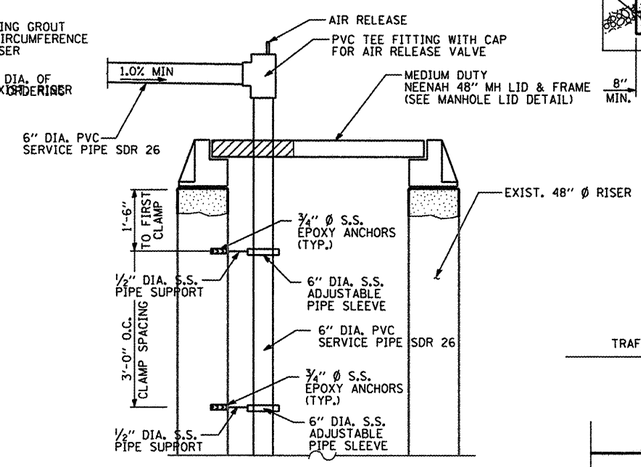

JUNCTION CHAMBER, SPECIAL
CHURCH SERVICE PIPE DETAIL INTO EXIST. 48" DIA. RISER

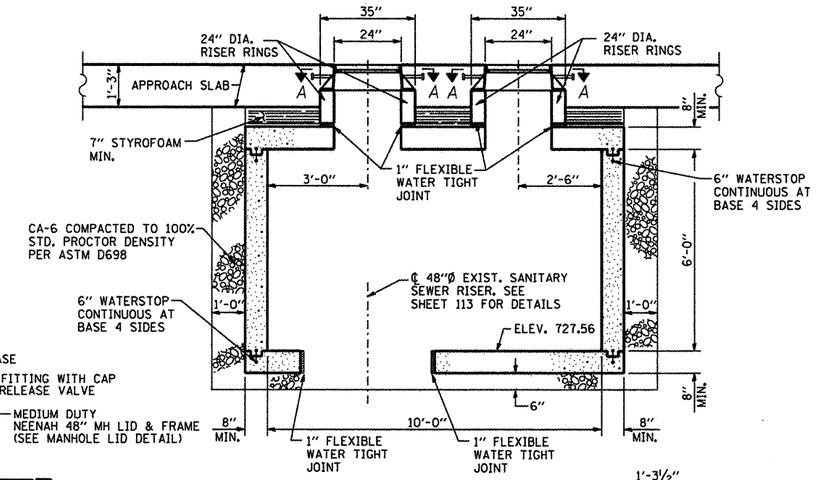

JUNCTION CHAMBER, SPECIAL
CROSS SECTION
(LOOKING WEST)

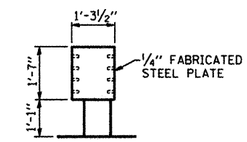

SECTION–PARAPET WALL INSERT

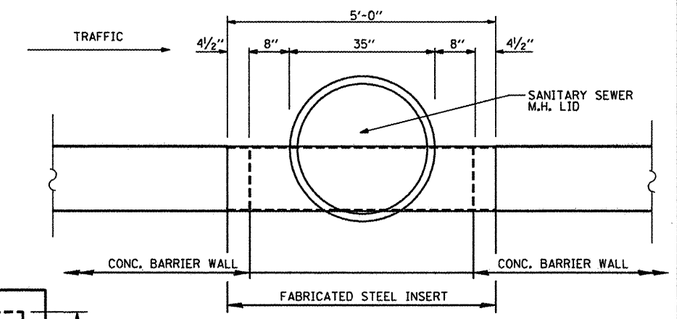

STEEL FABRICATED PARAPET WALL INSERT
PLAN VIEW

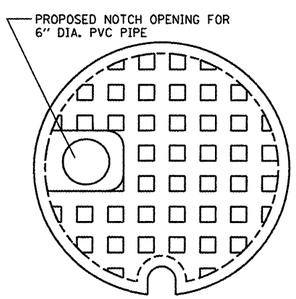

MANHOLE LID DETAIL – INSIDE CHAMBER
PLAN VIEW

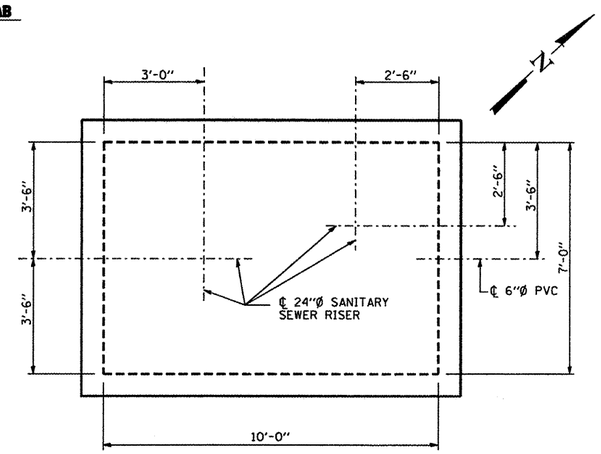

JUNCTION CHAMBER, SPECIAL
TOP VIEW

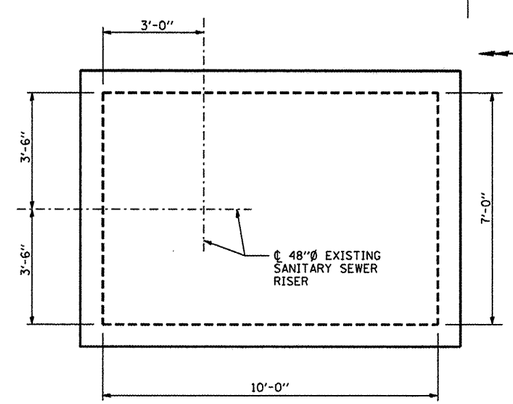

JUNCTION CHAMBER, SPECIAL
BOTTOM VIEW

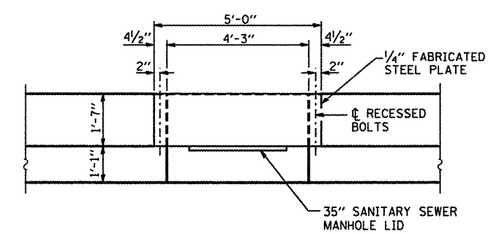

ELEVATION–PARAPET WALL INSERT

L:\ROCKFORD\09250802\Drawings\CADD_Sheets\R_CONST_DET_SANITARY_04.dgn

CMT ©Copyright CMT, Inc. CRAWFORD, MURPHY & TILLY, INC. CONSULTING ENGINEERS License No. 184-000613	USER NAME = Steve Prange	DESIGNED - SJP / MNB	REVISED -
		DRAWN - ERD	REVISED -
	PLOT SCALE = 40.0000 ' / IN.	CHECKED - SJP	REVISED -
	PLOT DATE = 02/04/11	DATE - 02/04/2011	REVISED -

CITY OF ROCKFORD
MORGAN STREET BRIDGE

PROPOSED SANITARY SEWER RELOCATION
CONSTRUCTION DETAILS

SCALE: N/A | SHEET NO. 4 OF 5 SHEETS | STA. TO STA.

F.A. RTE.	SECTION	COUNTY	TOTAL SHEETS	SHEET NO.
5077	99-00493-00-BR	WINNEBAGO	253	113
		CONTRACT NO. 85529		

FED. ROAD DIST. NO. 2 | ILLINOIS | FED. AID PROJECT BRM-5099(65)

CONTRACTOR SHALL USE REASONABLE CARE WHILE BACKFILLING OVER THE SEWER. NO MATERIALS SUCH AS ROCKS OR BOULDERS SHALL BE ALLOWED DIRECTLY ON THE SEWER PIPE UNLESS A MIN. OF 24" OF SELECT OR GRANULAR BACKFILL HAS BEEN PLACED ABOVE THE CROWN OF THE PIPE.

IN TRENCHES NOT REQUIRING SELECT TRENCH BACKFILL, NO EXCAVATED MATERIAL LARGER THAN EIGHT INCHES (8") IN ANY DIMENSION SHALL BE USED IN THE BACKFILL.

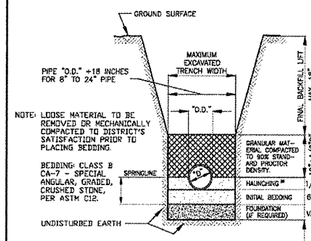

MODIFIED TYPE 5 LAYING CONDITION PER ANSI/AWWA C150/A21.50

CLAY, RCP & DIP PIPE BEDDING DETAIL

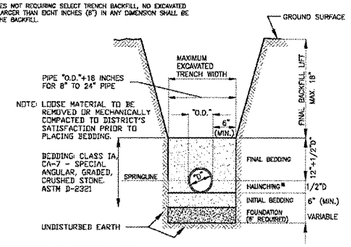

*HAUNCHING TO BE WELL-TAMPED ALONG PIPE TO INSURE VOIDS ARE ELIMINATED

PVC PIPE BEDDING DETAIL

STONE RIP-RAP SHALL BE GRADATION RR4, (16" MIN. THICKNESS) UNLESS SPECIFIED OTHERWISE, WITH GRADATION RR4 BEDDING (6" MIN. THICKNESS) PER IDOT SECTION 281. RIP RAP TO BE IMMEDIATELY INSTALLED AFTER COMPLETION OF BACKFILLING AND SILT FENCE AFTER RIP RAP INSTALLATION.

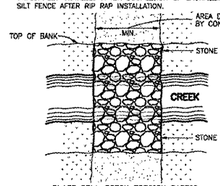

PLACE ROLL STOCK EROSION FABRIC UNDER RIP-RAP FIRST. REPLACE SILT FENCE IMMEDIATELY AFTER WORK IS COMPLETED AT TOP OF BANK. REPAIR AREAS DISTURBED BEYOND RIP-RAP AT BANKS AS NEEDED

STONE RIP-RAP DETAIL

TYPICAL

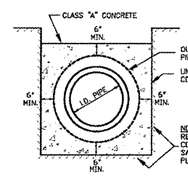

ENCASEMENT DETAIL

NOTE: THIS CONNECTION WILL REQUIRE DEFLECTION TESTING IN MAINLINE 30 DAYS (MINIMALLY) AFTER BACKFILLING IS COMPLETE.

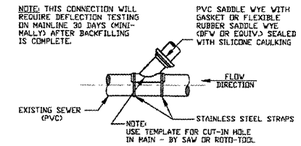

CUT-IN CONNECTION DETAIL (PVC PIPE)

PLAN VIEW

SEE SERVICE & SERVICE CLEANOUT RISER DETAIL

NOTE: CORE DRILL HOLE IN MAIN - DO NOT USE HAMMER, STAR DRILL, ETC.

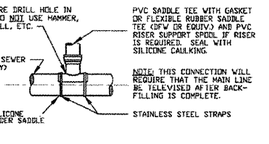

CUT-IN CONNECTION DETAIL (CLAY PIPE)

PROFILE VIEW

SEE SERVICE & SERVICE CLEANOUT RISER DETAIL

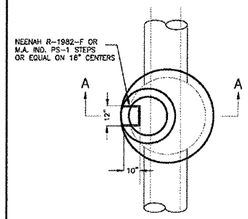

MANHOLE DETAIL - PLAN

NOTE: SEE STANDARD RISER DETAIL FOR UPPER PORTION OF RISER.

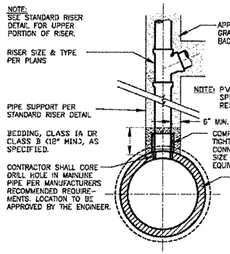

SERVICE CONNECTION FOR PVC TRUNK SEWER

FOR PIPE 18" IN DIA OR LARGER

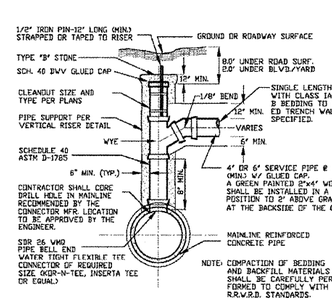

SERVICE CONNECTION DETAIL FOR RCP

NO SCALE

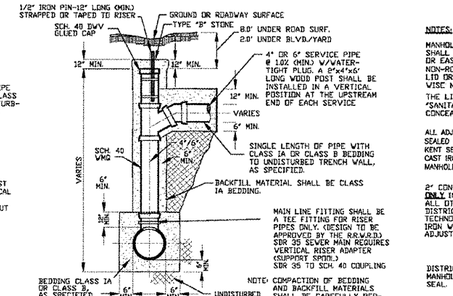

VERTICAL RISER DETAIL

SECTION A-A

NOTES:

MANHOLE FRAME AND COVER SHALL BE A NEENAH R-1670 OR EAST JORDAN E 1117 NON-ROCKING-SELF-SEALING LID OR EQUAL UNLESS OTHERWISE NOTED

THE LID SHALL HAVE 2" HIGH "SANITARY" LETTERING AND A CONCEALED PICK HOLE.

ALL ADJUSTMENT RING JOINTS SHALL BE SEALED WITH (2) 1" BEADS OF E-Z STIK, KENT SEAL OR EQUIVALENT, INCLUDING CAST IRON FRAME TO CONCRETE MANHOLE STRUCTURE.

2" CONCRETE RINGS ALLOWED ONLY IN CITY OF ROCKFORD ALL OTHER 2" RINGS MUST BE DISTRICT APPROVED (GNR TECHNOLOGIES, EAST JORDAN IRON WORKS) OR EQUAL RUBBER ADJUSTMENT RISER.

DISTRICT APPROVED EXTERNAL MANHOLE BARREL SECTION JOINT SEAL. (WET AREAS ONLY)

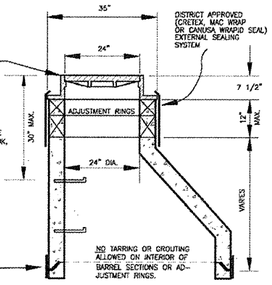

NOTES:

A MAXIMUM OF 12" MAXIMUM OF 4" (NOT REQUIRED IN TURF OR CURB & GUTTER ROAD). ONLY (1) - 2" ADJUSTMENT RING PER MANHOLE

WHEN A CASTING REQUIRES PITCHING, A MINIMUM OF THREE SHIMS (PLASTIC OR METAL) EQUALLY SPACED TO PREVENT ROCKING SHALL BE INSTALLED BETWEEN THE CASTING AND THE MASONRY. HYDRAULIC CEMENT SHALL BE PLACED TO FILL THE ENTIRE SPACE BETWEEN THE CASTING & MASONRY.

PRE-CAST FLAT TOPS WILL NOT BE PERMITTED ON 4' OR 5' DIAMETER MANHOLES

IF ABOVE REQUIREMENTS CANNOT BE MET, NEW BARREL SECTIONS OR CORBELS WILL BE REQUIRED.

SANITARY MANHOLE ADJUSTMENT DETAIL

NO SCALE

MINIMUM MANHOLE DIAMETERS		
PIPE SIZE	MIN. DIAMETER	MIN. WALL THICKNESS
8" - 15"	4'	5"
18" - 24"	5'	7"
24" - 36"	6'	7"
(OR AS DIRECTED BY THE DISTRICT)		

NOTE: THE MAXIMUM DROP FROM THE INVERT OF ANY PIPE IN A MANHOLE TO THE POURED CHANNEL UNDER THAT PIPE SHALL BE 8".

NOTE: MANHOLES LOCATED OUTSIDE PUBLIC RIGHT-OF-WAY MUST BE MARKED WITH A METAL FENCE POST

ALL NEW MANHOLES SHALL BE VACUUM TESTED PER ASTM C 1244 PRIOR TO PLACING INTO SERVICE. EXISTING MH'S WILL NOT REQUIRE VACUUM TESTING.

12" MAX., ONLY (1) - 2" ADJUSTMENT RING PER MANHOLE
NOTE: 4" ADJUSTMENT RING NOT REQUIRED IN TURF AREA OR CURB AND GUTTER ROADWAYS

NOTES:

ALL ADJUSTMENT RING JOINTS SHALL BE SEALED WITH (2) 1" BEADS OF E-Z STIK, KENT SEAL OR EQUIVALENT, INCLUDING CAST IRON FRAME TO CONCRETE MANHOLE STRUCTURE.

ALL BARREL JOINTS SHALL BE SEALED WITH 3 1/2"x 3/8" E-Z STIK, KENT SEAL OR EQUIVALENT ON THE SHIP LAP. IN WET AREAS AN ADDITIONAL 1" BEAD OF E-Z STIK, KENT SEAL OR EQUIVALENT WILL BE REQUIRED ON THE LOWER HORIZONTAL PORTION OF THE SHIP LAP.

MANHOLE STRUCTURE TO BE CONSTRUCTED OF PRE-CAST REINFORCED CONCRETE MANHOLE RISER PIPE. MANHOLE CONSTRUCTION SHALL CONFORM TO A.S.T.M. C478-90 OR LATEST DESIGNATION.

WHEN A CASTING REQUIRES PITCHING, A MINIMUM OF THREE SHIMS (PLASTIC OR METAL) EQUALLY SPACED TO PREVENT ROCKING SHALL BE INSTALLED BETWEEN THE CASTING AND THE MASONRY. HYDRAULIC CEMENT SHALL BE PLACED TO FILL THE SPACE BETWEEN THE CASTING & MASONRY.

PRE-CAST FLAT TOPS WILL NOT BE PERMITTED ON DISTRICT MANHOLES

PIPE CONNECTION TO PROPOSED MANHOLE SHALL BE MADE WATER-TIGHT BY MEANS OF RUBBER GASKET SEAL (A-LOK OR EQUAL), CONFORMING TO A.S.T.M. F-477, CAST INTEGRALLY IN MANHOLE WALL OR RUBBER GASKET SEAL AND STAINLESS STEEL CLAMP CONFORMING TO A.S.T.M. C-923.

PIPE CONNECTION TO EXISTING MANHOLE SHALL BE MADE WATER-TIGHT BY MEANS OF RUBBER GASKET SEAL AND STAINLESS STEEL CLAMP, CONFORMING TO A.S.T.M. C-923, PSX SERIES SIX OR EQUAL. PIPE ACCESS SHALL BE MADE BY CORE DRILLING MANHOLE WALL.

PSX SERIES GASKETS ARE NOT PERMITTED ON MH. OPENINGS OVER 20' DEEP. MH. OPENINGS OVER 20' DEEP SHALL REQUIRE A-LOK TO MANHOLE GASKET.

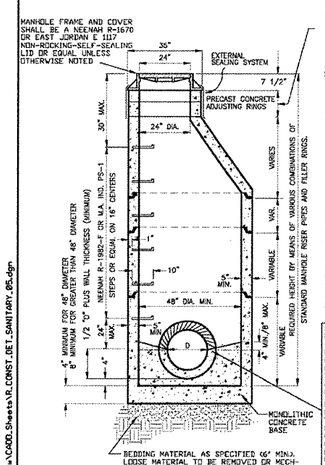

SANITARY MANHOLE DETAIL

SECTION A-A

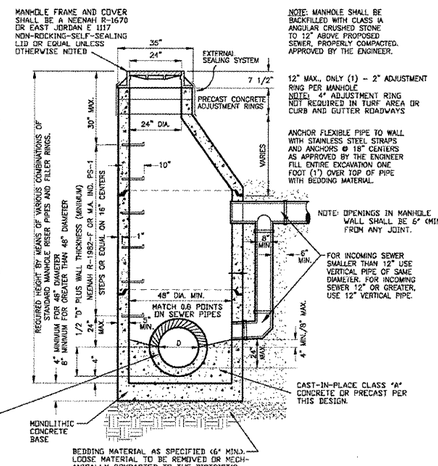

NOTE: MANHOLE SHALL BE BACKFILLED WITH CLASS IA ANGULAR CRUSHED STONE TO 12" ABOVE PROPOSED SEWER, PROPERLY COMPACTED. APPROVED BY THE ENGINEER.

12" MAX., ONLY (1) - 2" ADJUSTMENT RING PER MANHOLE
NOTE: 4" ADJUSTMENT RING NOT REQUIRED IN TURF AREA OR CURB AND GUTTER ROADWAYS

ANCHOR FLEXIBLE PIPE TO WALL WITH STAINLESS STEEL STRAPS AND ANCHORS @ 18" CENTERS AS APPROVED BY THE ENGINEER FILL ENTIRE EXCAVATION ONE FOOT (1') OVER TOP OF PIPE WITH BEDDING MATERIAL.

NOTE: OPENINGS IN MANHOLE WALL SHALL BE 6" (MIN.) FROM ANY JOINT.

FOR INCOMING SEWER SMALLER THAN 12" USE VERTICAL PIPE OF SAME DIAMETER. FOR INCOMING SEWER 12" OR GREATER, USE 12" VERTICAL PIPE.

CAST-IN-PLACE CLASS "A" CONCRETE OR PRECAST PER THIS DESIGN.

SANITARY DROP MANHOLE DETAIL

SECTION A-A

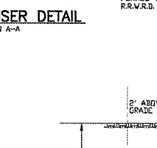

PLAN VIEW (RISER DETAIL)

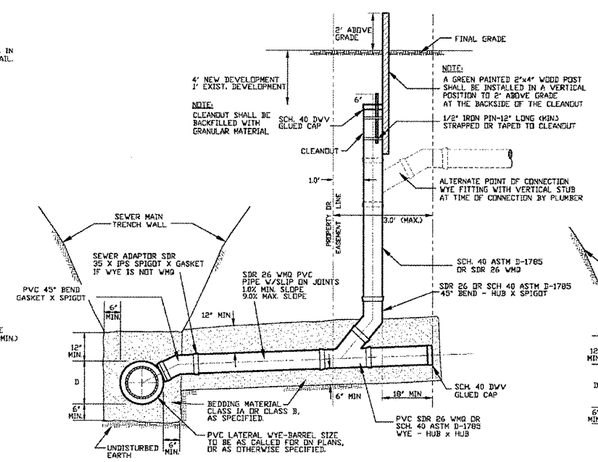

SERVICE & SERVICE CLEANOUT RISER

NO SCALE

NOTE: SANITARY SERVICES REQUIRED TO EXTEND MAX. 3' BEYOND R.O.W. LINE

ALL SCHEDULE 40 PVC PIPE AND FITTINGS SHALL MEET THE REQUIREMENTS OF ASTM D1785/D2665. ALL WMQ SDR 26 PVC PIPE AND FITTINGS SHALL MEET THE REQUIREMENTS OF ASTM D2241 AND D3139. ALL DWV FITTINGS SHALL BE CLEANED, PRIMED AND GLUED.

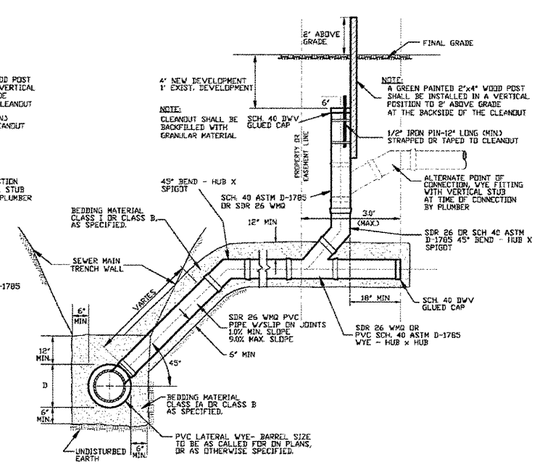

ALTERNATE SERVICE RISER DETAIL (WITH SERVICE CLEANOUT)

NO SCALE

NOTE: SANITARY SERVICES REQUIRED TO EXTEND MAX. 3' BEYOND R.O.W. LINE

ALL SCHEDULE 40 PVC PIPE AND FITTINGS SHALL MEET THE REQUIREMENTS OF ASTM D1785/D2665. ALL WMQ SDR 26 PVC PIPE AND FITTINGS SHALL MEET THE REQUIREMENTS OF ASTM D2241 AND D3139. ALL DWV FITTINGS SHALL BE CLEANED, PRIMED AND GLUED.

L:\ROCKFORD\8826882\Dwg\CADD_Sheets\R_CONST_DET_SANITARY_05.dgn

CMT
CRAWFORD, MURPHY & TILLY, INC.
CONSULTING ENGINEERS
License No. 184-000663

USER NAME = Steve Prange	DESIGNED - SJP / MNB	REVISED -	
	DRAWN - ERD	REVISED -	
PLOT SCALE = 2.0000 ' / IN.	CHECKED - SJP	REVISED -	
PLOT DATE = 02/04/11	DATE - 02/04/2011	REVISED -	

CITY OF ROCKFORD
MORGAN STREET BRIDGE

PROPOSED SANITARY SEWER RELOCATION
STANDARD DETAILS

SCALE: N/A | SHEET NO. 5 OF 5 SHEETS | STA. | TO STA.

F.A. RTE.	SECTION	COUNTY	TOTAL SHEETS	SHEET NO.
5077	99-00493-00-BR	WINNEBAGO	253	114
		CONTRACT NO. 85529		
FED. ROAD DIST. NO. 2	ILLINOIS	FED. AID PROJECT BRM-5099(65)		

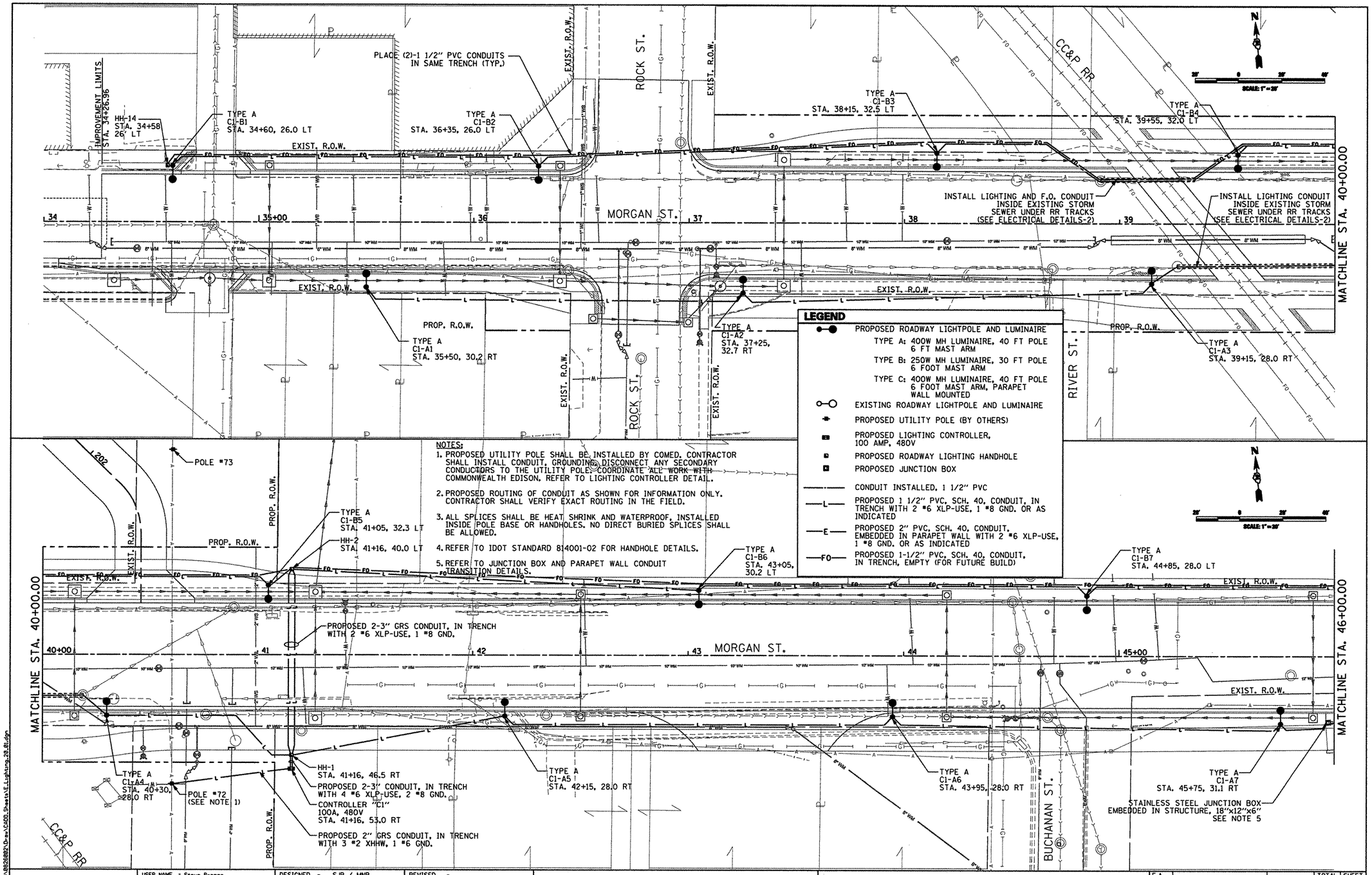

LEGEND

- PROPOSED ROADWAY LIGHTPOLE AND LUMINAIRE
  - TYPE A: 400W MH LUMINAIRE, 40 FT POLE 6 FT MAST ARM
  - TYPE B: 250W MH LUMINAIRE, 30 FT POLE 6 FOOT MAST ARM
  - TYPE C: 400W MH LUMINAIRE, 40 FT POLE 6 FOOT MAST ARM, PARAPET WALL MOUNTED
- EXISTING ROADWAY LIGHTPOLE AND LUMINAIRE
- PROPOSED UTILITY POLE (BY OTHERS)
- PROPOSED LIGHTING CONTROLLER, 100 AMP, 480V
- PROPOSED ROADWAY LIGHTING HANDHOLE
- PROPOSED JUNCTION BOX
- CONDUIT INSTALLED, 1 1/2" PVC
- PROPOSED 1 1/2" PVC, SCH. 40, CONDUIT, IN TRENCH WITH 2 #6 XLP-USE, 1 #8 GND. OR AS INDICATED
- PROPOSED 2" PVC, SCH. 40, CONDUIT, EMBEDDED IN PARAPET WALL WITH 2 #6 XLP-USE, 1 #8 GND. OR AS INDICATED
- PROPOSED 1-1/2" PVC, SCH. 40, CONDUIT, IN TRENCH, EMPTY (FOR FUTURE BUILD)

NOTES:

1. PROPOSED UTILITY POLE SHALL BE INSTALLED BY COMED. CONTRACTOR SHALL INSTALL CONDUIT, GROUNDING, DISCONNECT ANY SECONDARY CONDUCTORS TO THE UTILITY POLE. COORDINATE ALL WORK WITH COMMONWEALTH EDISON. REFER TO LIGHTING CONTROLLER DETAIL.
2. PROPOSED ROUTING OF CONDUIT AS SHOWN FOR INFORMATION ONLY. CONTRACTOR SHALL VERIFY EXACT ROUTING IN THE FIELD.
3. ALL SPLICES SHALL BE HEAT SHRINK AND WATERPROOF, INSTALLED INSIDE POLE BASE OR HANDHOLES. NO DIRECT BURIED SPLICES SHALL BE ALLOWED.
4. REFER TO IDOT STANDARD 814001-02 FOR HANDHOLE DETAILS.
5. REFER TO JUNCTION BOX AND PARAPET WALL CONDUIT TRANSITION DETAILS.

L:\ROCKFORD\0826802\D-ev\CADD_Sheets\E_Lighting_28_01.dgn

CMT
CRAWFORD, MURPHY & TILLY, INC.
CONSULTING ENGINEERS
License No. 184-000613
©Copyright CMT, Inc.

USER NAME = Steve Prange	DESIGNED - SJP / MNB	REVISED -	
	DRAWN - ERD	REVISED -	
PLOT SCALE = 40.0000 ' / IN.	CHECKED - SJP	REVISED -	
PLOT DATE = 02/04/11	DATE - 02/04/2011	REVISED -	

CITY OF ROCKFORD
MORGAN STREET BRIDGE

ROADWAY LIGHTING PLAN
MORGAN STREET /COLLEGE AVENUE

SCALE: 1"=20' | SHEET NO. 1 OF 4 SHEETS | STA. 34+00 TO STA. 46+00

F.A. RTE.	SECTION	COUNTY	TOTAL SHEETS	SHEET NO.
5077	99-00493-00-BR	WINNEBAGO	253	115
		CONTRACT NO. 85529		
FED. ROAD DIST. NO. 2	ILLINOIS	FED. AID PROJECT BRM-5099(65)		

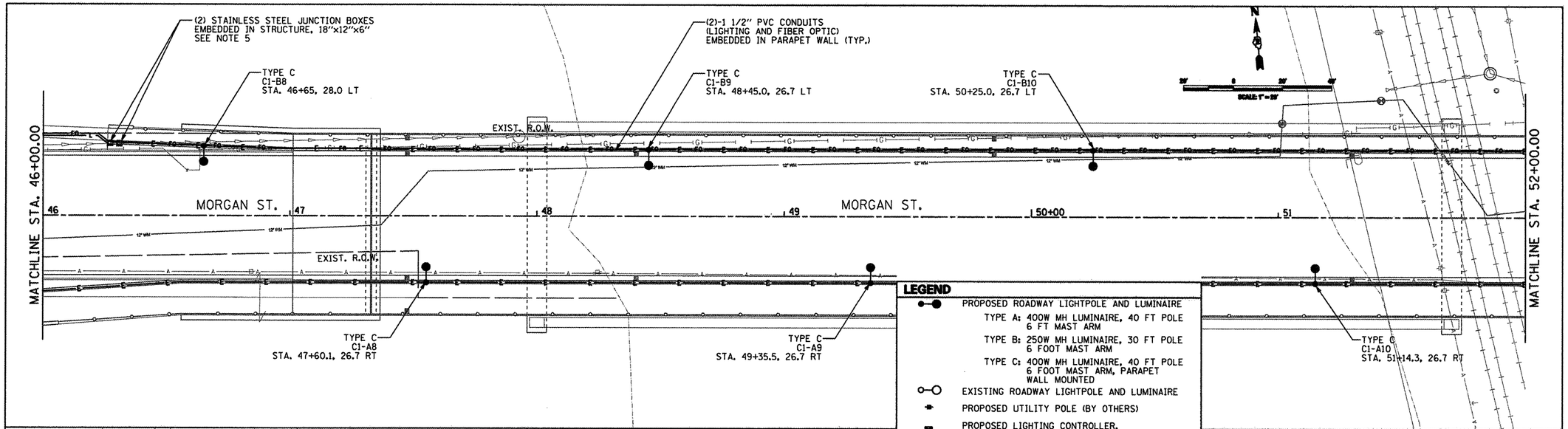

LEGEND

- PROPOSED ROADWAY LIGHTPOLE AND LUMINAIRE
  - TYPE A: 400W MH LUMINAIRE, 40 FT POLE 6 FT MAST ARM
  - TYPE B: 250W MH LUMINAIRE, 30 FT POLE 6 FOOT MAST ARM
  - TYPE C: 400W MH LUMINAIRE, 40 FT POLE 6 FOOT MAST ARM, PARAPET WALL MOUNTED
- EXISTING ROADWAY LIGHTPOLE AND LUMINAIRE
- PROPOSED UTILITY POLE (BY OTHERS)
- PROPOSED LIGHTING CONTROLLER, 100 AMP, 480V
- PROPOSED ROADWAY LIGHTING HANDHOLE
- PROPOSED JUNCTION BOX
- CONDUIT INSTALLED, 1 1/2" PVC
- —L— PROPOSED 1 1/2" PVC, SCH. 40, CONDUIT, IN TRENCH WITH 2 #6 XLP-USE, 1 #8 GND. OR AS INDICATED
- —E— PROPOSED 2" PVC, SCH. 40, CONDUIT, EMBEDDED IN PARAPET WALL WITH 2 #6 XLP-USE, 1 #8 GND. OR AS INDICATED
- —FO— PROPOSED 1-1/2" PVC, SCH. 40, CONDUIT, IN TRENCH, EMPTY (FOR FUTURE BUILD)

NOTES:

1. PROPOSED UTILITY POLE SHALL BE INSTALLED BY COMED. CONTRACTOR SHALL INSTALL CONDUIT, GROUNDING, DISCONNECT ANY SECONDARY CONDUCTORS TO THE UTILITY POLE. COORDINATE ALL WORK WITH COMMONWEALTH EDISON. REFER TO LIGHTING CONTROLLER DETAIL.
2. PROPOSED ROUTING OF CONDUIT AS SHOWN FOR INFORMATION ONLY. CONTRACTOR SHALL VERIFY EXACT ROUTING IN THE FIELD.
3. ALL SPLICES SHALL BE HEAT SHRINK AND WATERPROOF, INSTALLED INSIDE POLE BASE OR HANDHOLES. NO DIRECT BURIED SPLICES SHALL BE ALLOWED.
4. REFER TO IDOT STANDARD 814001-02 FOR HANDHOLE DETAILS.
5. REFER TO JUNCTION BOX AND PARAPET WALL CONDUIT TRANSITION DETAILS.

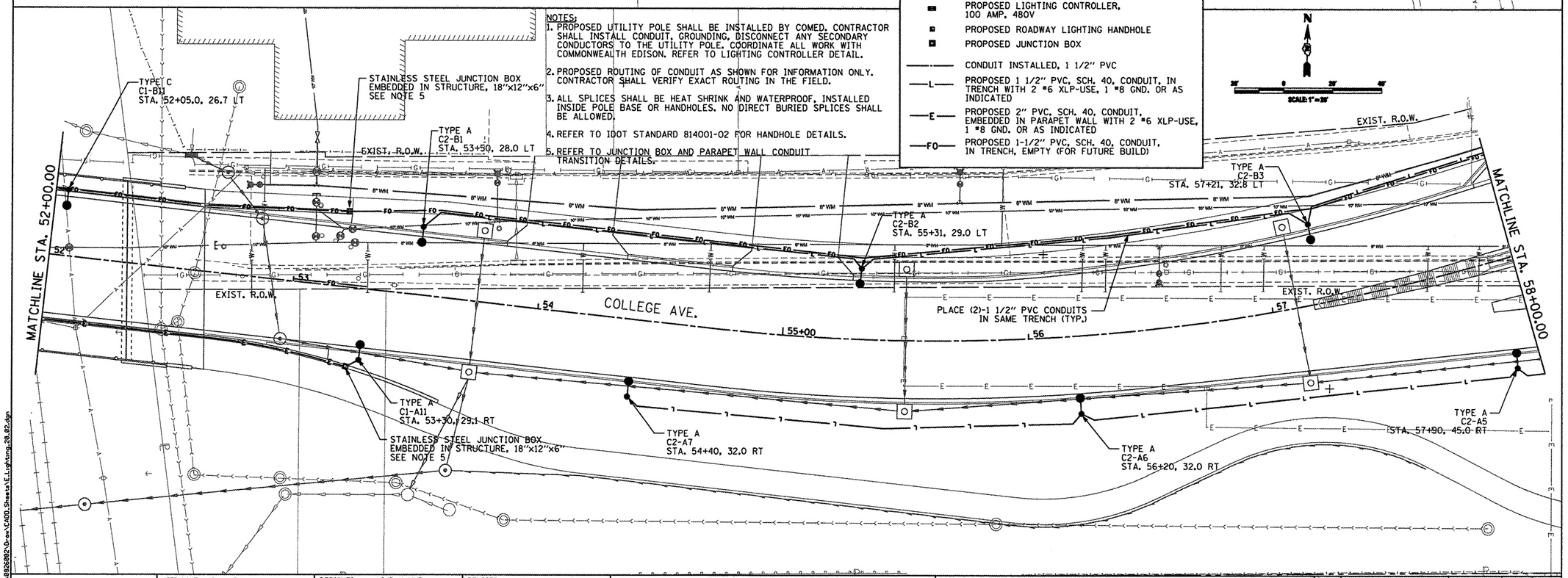

CMT CRAWFORD, MURPHY & TILLY, INC. CONSULTING ENGINEERS License No. 184-000613	USER NAME = Steve Prange	DESIGNED - SJP / MNB	REVISED -	CITY OF ROCKFORD MORGAN STREET BRIDGE	ROADWAY LIGHTING PLAN MORGAN STREET /COLLEGE AVENUE
		DRAWN - ERD	REVISED -		
	PLOT SCALE = 40.0000 ' / IN.	CHECKED - SJP	REVISED -		
	PLOT DATE = 02/04/11	DATE - 02/04/2011	REVISED -		SCALE: 1"=20' SHEET NO. 2 OF 4 SHEETS STA. 46+00 TO STA. 58+00

F.A. RTE.	SECTION	COUNTY	TOTAL SHEETS	SHEET NO.
5077	99-00493-00-BR	WINNEBAGO	253	116
		CONTRACT NO. 85529		
FED. ROAD DIST. NO. 2	ILLINOIS	FED. AID PROJECT BRM-5099(65)		

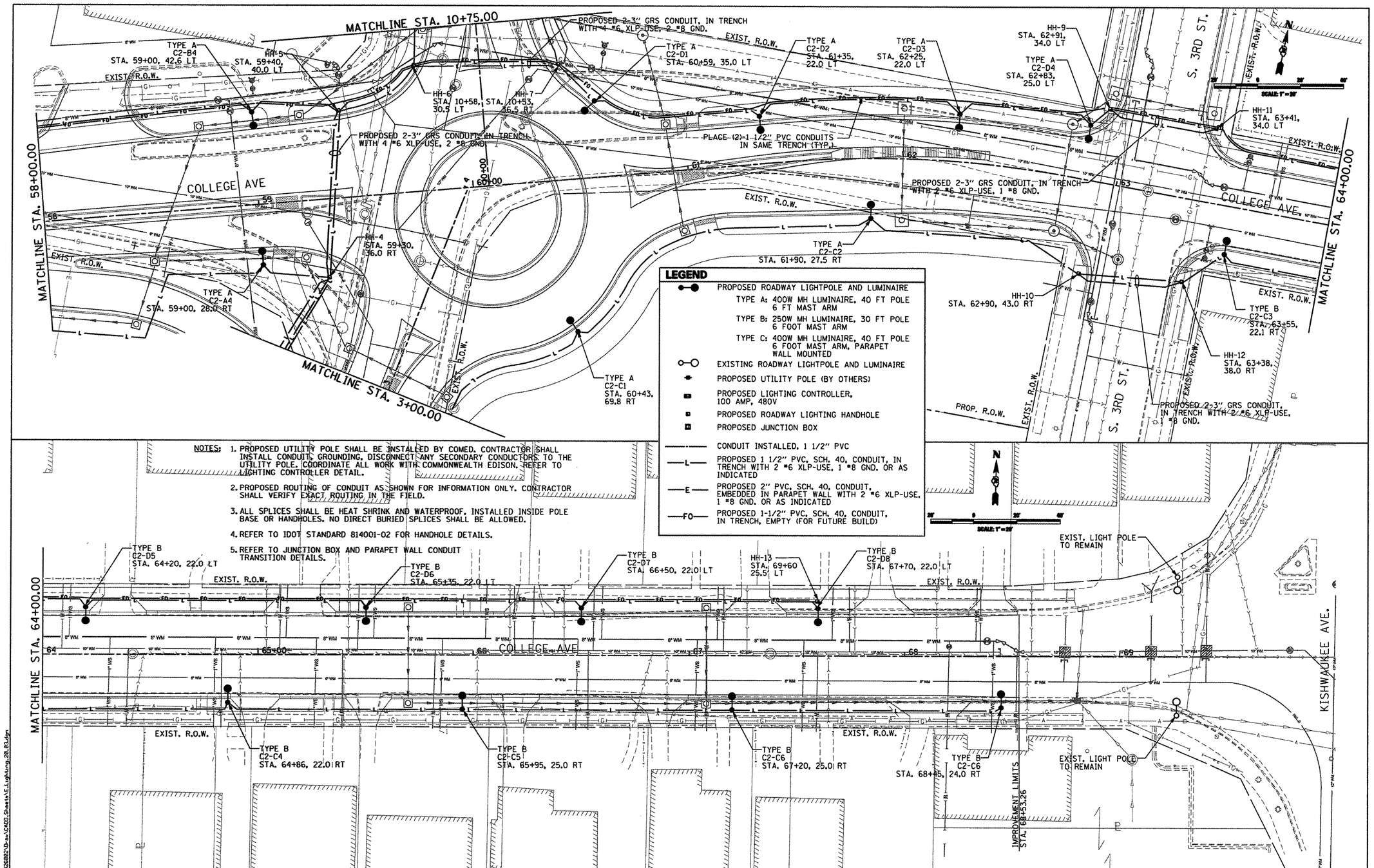

NOTES:

1. PROPOSED UTILITY POLE SHALL BE INSTALLED BY COMED. CONTRACTOR SHALL INSTALL CONDUIT, GROUNDING, DISCONNECT, ANY SECONDARY CONDUCTORS TO THE UTILITY POLE. COORDINATE ALL WORK WITH COMMONWEALTH EDISON. REFER TO LIGHTING CONTROLLER DETAIL.
2. PROPOSED ROUTING OF CONDUIT AS SHOWN FOR INFORMATION ONLY. CONTRACTOR SHALL VERIFY EXACT ROUTING IN THE FIELD.
3. ALL SPLICES SHALL BE HEAT SHRINK AND WATERPROOF, INSTALLED INSIDE POLE BASE OR HANDHOLES. NO DIRECT BURIED SPLICES SHALL BE ALLOWED.
4. REFER TO IDOT STANDARD 814001-02 FOR HANDHOLE DETAILS.
5. REFER TO JUNCTION BOX AND PARAPET WALL CONDUIT TRANSITION DETAILS.

L:\ROCKFORD\0852682\D-mx\CADD_Sheets\E_Lighting_28_03.dgn

CMT ©Copyright CMT, Inc.
CRAWFORD, MURPHY & TILLY, INC.
CONSULTING ENGINEERS
License No. 184-000613

USER NAME = Steve Prange	DESIGNED - SJP / MNB	REVISED -	
	DRAWN - ERD	REVISED -	
PLOT SCALE = 40.0000 ' / IN.	CHECKED - SJP	REVISED -	
PLOT DATE = 02/04/11	DATE - 02/04/2011	REVISED -	

CITY OF ROCKFORD
MORGAN STREET BRIDGE

ROADWAY LIGHTING PLAN
MORGAN STREET /COLLEGE AVENUE

SCALE: 1"=20' | SHEET NO. 3 OF 4 SHEETS | STA. 58+00 TO STA.

F.A. RTE.	SECTION	COUNTY	TOTAL SHEETS	SHEET NO.
5077	99-00493-00-BR	WINNEBAGO	253	117
		CONTRACT NO. 85529		
FED. ROAD DIST. NO. 2	ILLINOIS	FED. AID PROJECT BRM-5099(65)		

NOTES:

1. PROPOSED UTILITY POLE SHALL BE INSTALLED BY COMED. CONTRACTOR SHALL INSTALL CONDUIT, GROUNDING, DISCONNECT ANY SECONDARY CONDUCTORS TO THE UTILITY POLE. COORDINATE ALL WORK WITH COMMONWEALTH EDISON. REFER TO LIGHTING CONTROLLER DETAIL.
2. PROPOSED ROUTING OF CONDUIT AS SHOWN FOR INFORMATION ONLY. CONTRACTOR SHALL VERIFY EXACT ROUTING IN THE FIELD.
3. ALL SPLICES SHALL BE HEAT SHRINK AND WATERPROOF, INSTALLED INSIDE POLE BASE OR HANDHOLES. NO DIRECT BURIED SPLICES SHALL BE ALLOWED.
4. REFER TO IDOT STANDARD 814001-02 FOR HANDHOLE DETAILS.
5. REFER TO JUNCTION BOX AND PARAPET WALL CONDUIT TRANSITION DETAILS.

LEGEND

- PROPOSED ROADWAY LIGHTPOLE AND LUMINAIRE
  - TYPE A: 400W MH LUMINAIRE, 40 FT POLE 6 FT MAST ARM
  - TYPE B: 250W MH LUMINAIRE, 30 FT POLE 6 FOOT MAST ARM
  - TYPE C: 400W MH LUMINAIRE, 40 FT POLE 6 FOOT MAST ARM, PARAPET WALL MOUNTED
- EXISTING ROADWAY LIGHTPOLE AND LUMINAIRE
- PROPOSED UTILITY POLE (BY OTHERS)
- PROPOSED LIGHTING CONTROLLER, 100 AMP, 480V
- PROPOSED ROADWAY LIGHTING HANDHOLE
- PROPOSED JUNCTION BOX
- CONDUIT INSTALLED, 1 1/2" PVC
- L — PROPOSED 1 1/2" PVC, SCH. 40, CONDUIT, IN TRENCH WITH 2 #6 XLP-USE, 1 #8 GND. OR AS INDICATED
- E — PROPOSED 2" PVC, SCH. 40, CONDUIT, EMBEDDED IN PARAPET WALL WITH 2 #6 XLP-USE, 1 #8 GND. OR AS INDICATED
- FO — PROPOSED 1-1/2" PVC, SCH. 40, CONDUIT, IN TRENCH, EMPTY (FOR FUTURE BUILD)

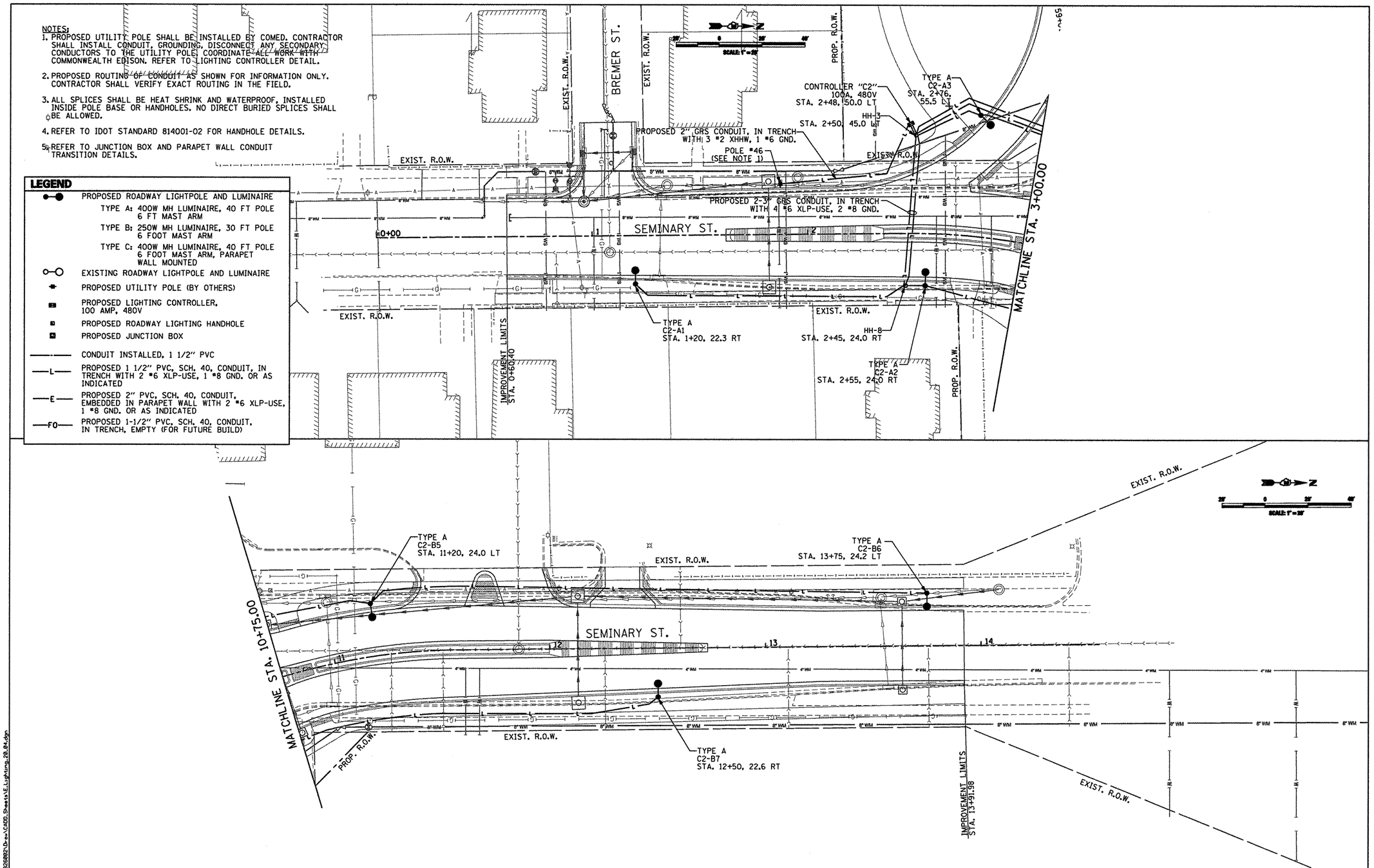

CMT CRAWFORD, MURPHY & TILLY, INC. CONSULTING ENGINEERS License No. 184-000613 ©Copyright CMT, Inc.	USER NAME = Steve Prange	DESIGNED - SJP / MNB	REVISED -	CITY OF ROCKFORD MORGAN STREET BRIDGE	ROADWAY LIGHTING PLAN SEMINARY STREET	F.A. RTE.	SECTION	COUNTY	TOTAL SHEETS / SHEET NO.
		DRAWN - ERD	REVISED -			5077	99-00493-00-BR	WINNEBAGO	253 / 118
	PLOT SCALE = 40.0000 ' / IN.	CHECKED - SJP	REVISED -					CONTRACT NO. 85529	
	PLOT DATE = 02/04/11	DATE - 02/04/2011	REVISED -		SCALE: 1"=20' / SHEET NO. 4 OF 4 SHEETS / STA. / TO STA.	FED. ROAD DIST. NO. 2	ILLINOIS	FED. AID PROJECT BRM-5099(65)	

L:\ROCKFORD\0820802\Dgns\CADD_Sheets\E_Lighting_20_04.dgn

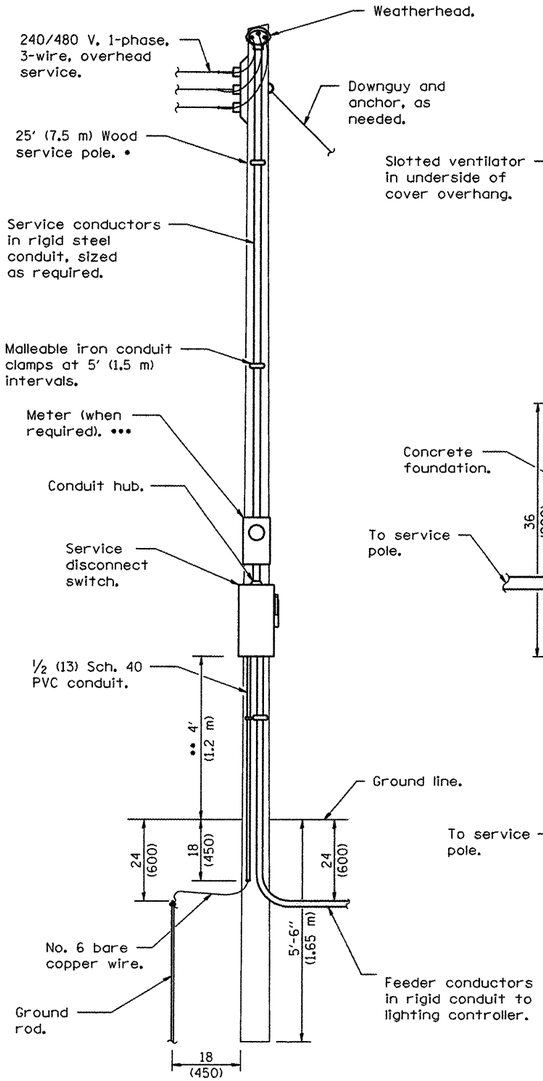

ELECTRIC SERVICE INSTALLATION

- • Size larger as needed.
- •• Or as directed by Utility Company.
- ••• When cold sequencing is required, provide a meter disconnect switch as directed by Utility Company.

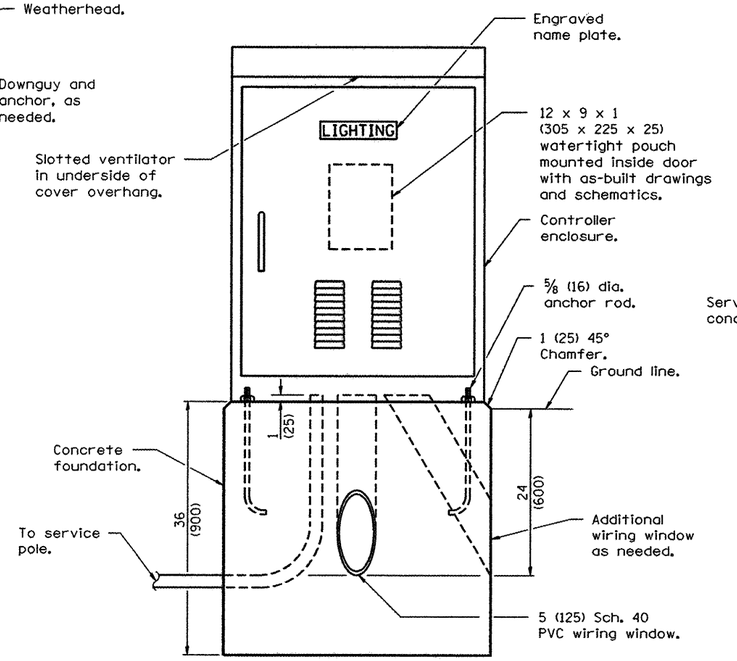

LIGHTING CONTROLLER

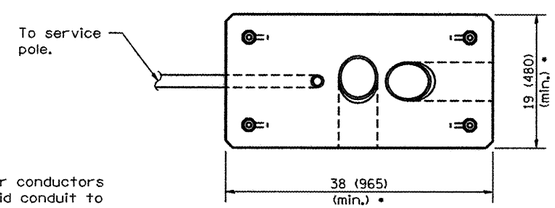

FOUNDATION (PLAN)

(Work pad not shown.)

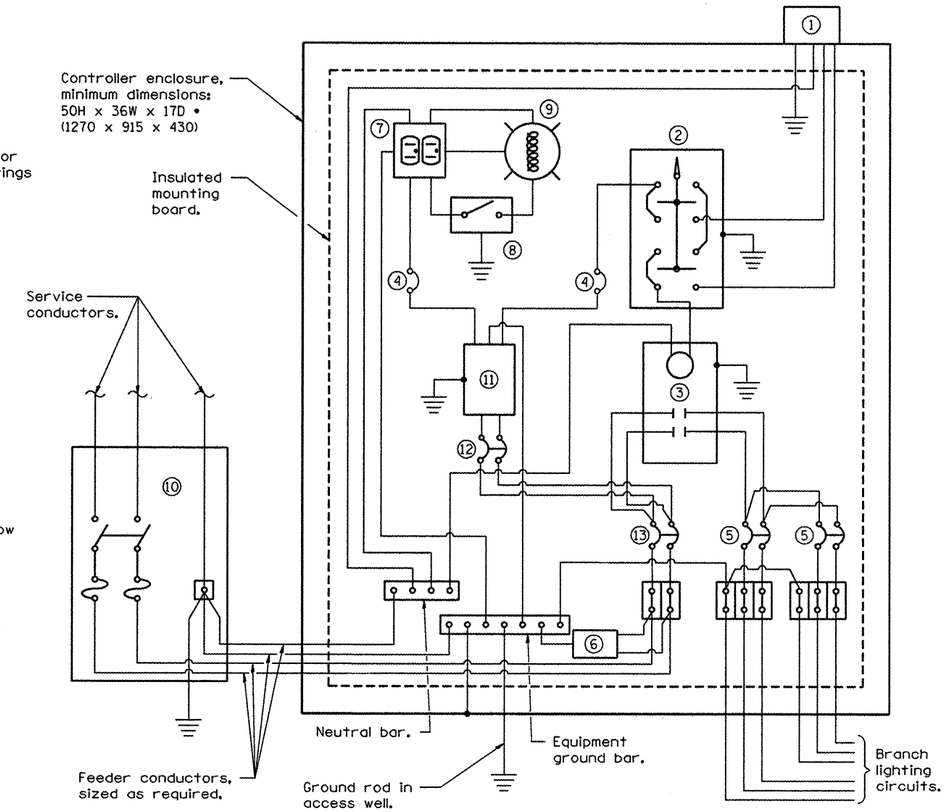

CONTROL SCHEMATIC

1. Photocell with integral surge arrester.
2. HAND-OFF-AUTO selector switch.
3. 100 amp•, electrically held contactor.
4. 15 amp, 1-pole circuit breaker.
5. 20 amp•, 2-pole circuit breaker (two spares required but not shown).
6. Surge arrester.
7. GFCI duplex receptacle.
8. Single-pole, single-throw switch.
9. Incandescent luminaire, enclosed and gasketted with 100 watt lamp.
10. Service disconnect switch - 2-pole, 3-wire, 100 amp•, fused at 100 amp•, solid neutral in NEMA 4X enclosure having lockable external handle.
11. Transformer - 1KVA•, 480V primary, 120/240V secondary, single-phase, 60Hz.
12. 15 amp, 2-pole circuit breaker.
13. 100 amp•, 2-pole circuit breaker.

• Size larger as needed.

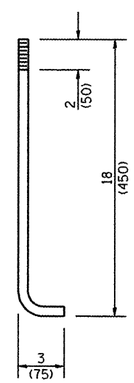

ANCHOR ROD DETAIL

All dimensions are in inches (millimeters) unless otherwise shown.

LIGHTING CONTROLLER BASE MOUNTED, 480V

STANDARD 825026-01

L:\ROCKFORD\0826082\Dwn\CADD\Sheets\E_Lighting_Details_01.dgn

CMT CRAWFORD, MURPHY & TILLY, INC. CONSULTING ENGINEERS License No. 184-000613 ©Copyright CMT, Inc.	USER NAME = Steve Prange	DESIGNED - SJP / MNB	REVISED -
		DRAWN - ERD	REVISED -
	PLOT SCALE = 40.0000 ' / IN.	CHECKED - SJP	REVISED -
	PLOT DATE = 02/04/11	DATE - 02/04/2011	REVISED -

CITY OF ROCKFORD
MORGAN STREET BRIDGE

ELECTRICAL DETAILS – 1

SCALE: N/A | SHEET NO. 1 OF 8 SHEETS | STA. TO STA.

F.A. RTE.	SECTION	COUNTY	TOTAL SHEETS	SHEET NO.
5077	99-00493-00-BR	WINNEBAGO	253	119
		CONTRACT NO. 85529		

FED. ROAD DIST. NO. 2 | ILLINOIS | FED. AID PROJECT BRM-5099(65)

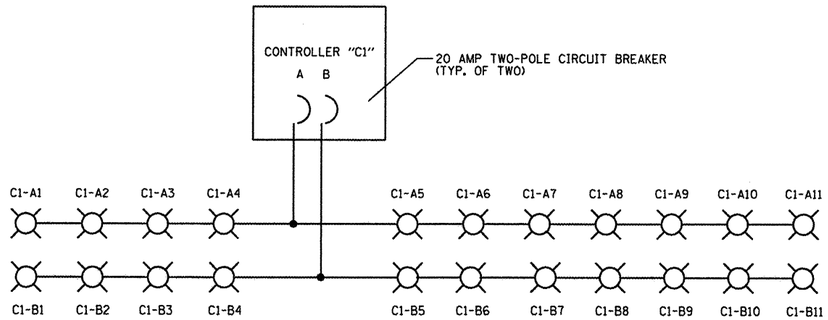

ROADWAY LIGHTING CONTROLLER "C1" ONE-LINE

CONTROLLER "C1" LOAD SCHEDULE		
CIRCUIT #	AMPERES	WATTAGE
A	11.45	4400
B	11.45	4400

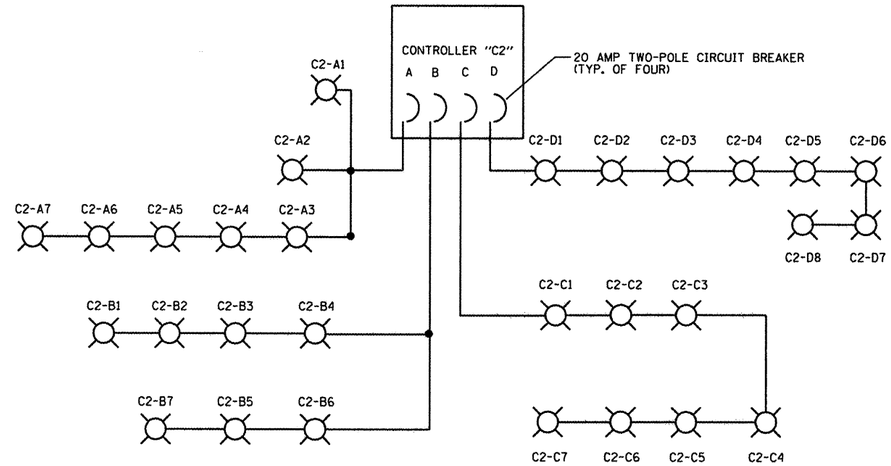

ROADWAY LIGHTING CONTROLLER "C2" ONE-LINE

CONTROLLER "C2" LOAD SCHEDULE		
CIRCUIT #	AMPERES	WATTAGE
A	7.29	2800
B	6.25	2400
C	5.33	2050
D	6.77	2600

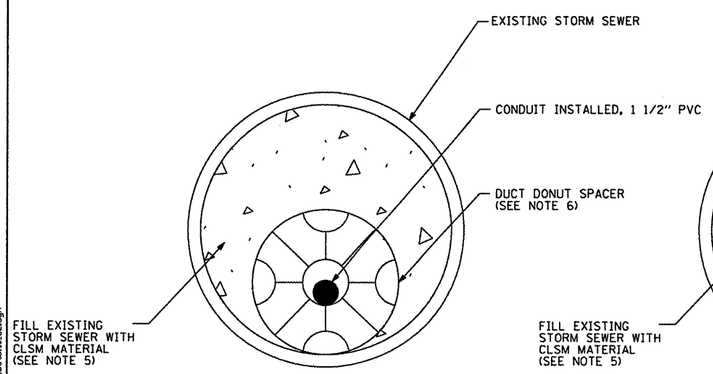

SINGLE CONDUIT ASSEMBLY

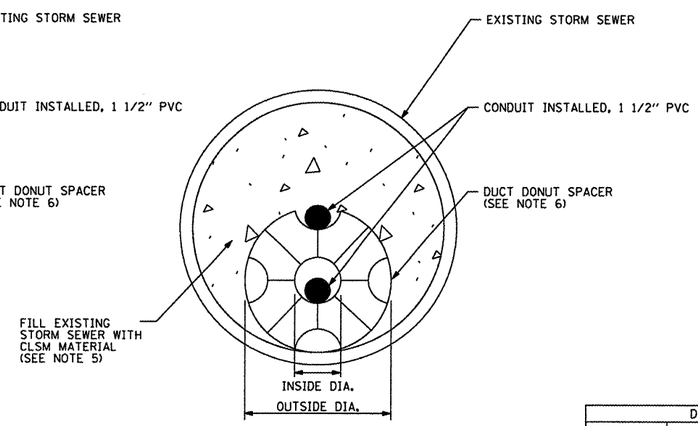

DOUBLE CONDUIT ASSEMBLY

CONDUIT INSTALLED, 1 1/2" PVC WITH SPACERS

NOTES:

1. USE ONE DUCT SPACER FOR EVERY 5 FEET OF EXISTING STORM SEWER CASING.
2. INSTALL DUCT SPACERS PERPENDICULAR TO CONDUITS TO REDUCE THE TENDENCY OF CONDUITS TO CORKSCREW.
3. CONTRACTOR MUST COORDINATE WITH DUCT SPACER MANUFACTURER ON INSTALLATION MEANS TO PREVENT THE DUCTBANK FROM ROTATING DURING INSTALLATION. DUCT SPACERS MUST BE HELD IN PLACE WITH NON-METALLIC STRAPS AND HOLD DOWN BARS.
4. THE DUCTBANK MUST BE HELD IN POSITION AT BOTH ENDS TO ACCOMODATE POSSIBLE UNEVEN THRUST LOADS THAT MAY BE GENERATED DURING THE GROUTING OPERATION.
5. THE COST FOR FILLING THE EXISTING STORM SEWER WITH CLSM SHALL BE INCLUDED IN THE CONTRACT UNIT COST FOR CONDUIT INSTALLED, 1 1/2" PVC.
6. THE COST FOR DUCT DONUT SPACERS AND ANY ASSOCIATED STRAPS USED TO HOLD THE CONDUIT IN PLACE SHALL BE INCLUDED IN THE CONTRACT UNIT COST FOR CONDUIT INSTALLED, 1 1/2" PVC.

DUCT DONUT SPACER SPECIFICATIONS			
DUCT SIZE	INSIDE DIAMETER	OUTSIDE DIAMETER	THICKNESS
1 1/2"	2 3/4"	8 3/4"	1 1/4"

L:\ROCKFORD\0826802\Drawings\CADD_Sheets\E_Lighting_Details_02.dgn

CMT
CRAMFORD, MURPHY & TILLY, INC.
CONSULTING ENGINEERS
License No. 184-000613

USER NAME = Steve Prange	DESIGNED - SJP / MNB	REVISED -	
	DRAWN - ERD	REVISED -	
PLOT SCALE = 40.0000 ' / IN.	CHECKED - SJP	REVISED -	
PLOT DATE = 02/04/11	DATE - 02/04/2011	REVISED -	

CITY OF ROCKFORD
MORGAN STREET BRIDGE

ELECTRICAL DETAILS – 2

SCALE: N/A | SHEET NO. 2 OF 8 SHEETS | STA. | TO STA.

F.A. RTE.	SECTION	COUNTY	TOTAL SHEETS	SHEET NO.
5077	99-00493-00-BR	WINNEBAGO	253	120

CONTRACT NO. 85529

FED. ROAD DIST. NO. 2 | ILLINOIS | FED. AID PROJECT BRM-5099(65)

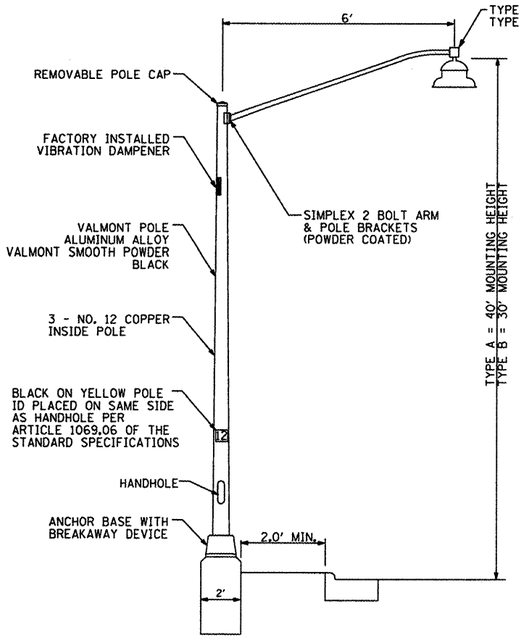

LIGHT POLES TYPE A & B

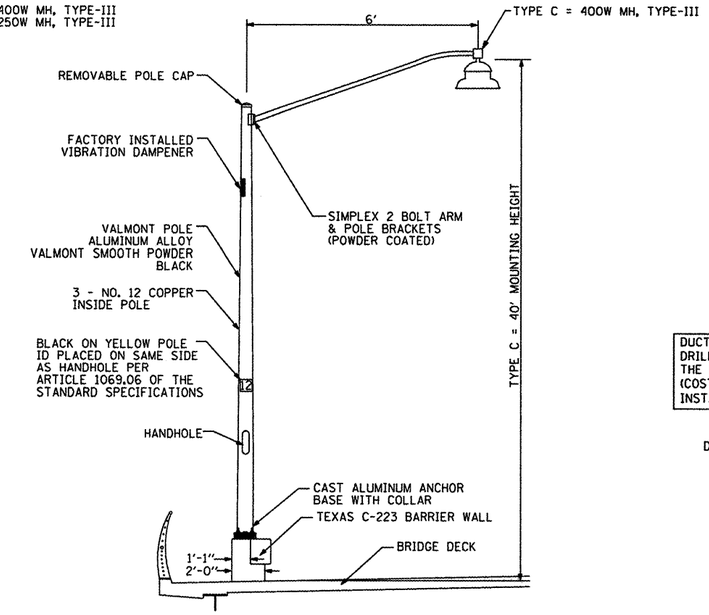

LIGHT POLE TYPE C (ON BRIDGE)

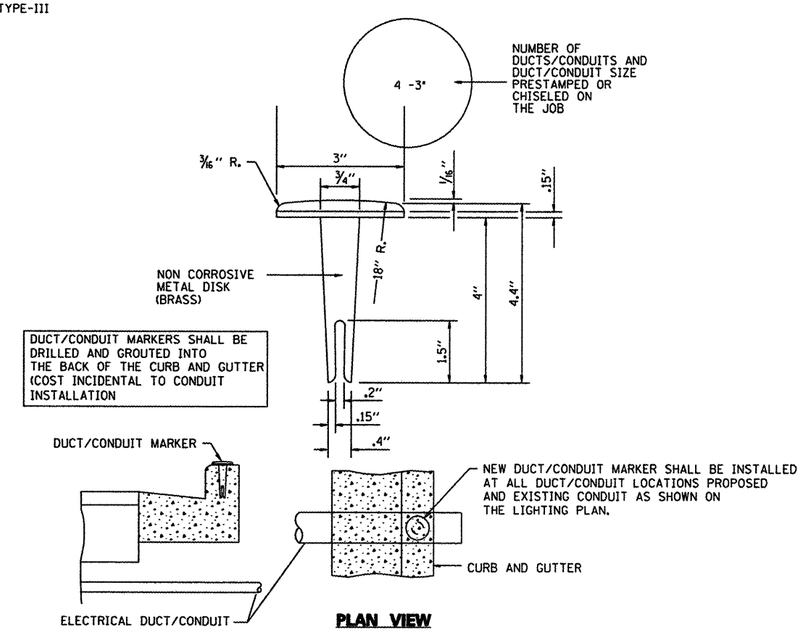

PLAN VIEW

DUCT MARKER DETAIL
NOT TO SCALE

NOTES:

1. REFER TO IDOT STANDARD DWG. BE-301 FOR LIGHT POLE DETAILS. (SHEETS 124 & 125)
2. REFER TO IDOT STANDARD DWG. BE-702 FOR POLE WIRING AND TRENCH DETAILS. (SHEET 126)

LUMINAIRE SCHEDULE

TYPE	DESCRITPION	MANUFACTURER	POLE	LAMP	VOLTAGE
TYPE A	DOMUS 55 SERIES, TYPE III CUTOFF CATALOG DMS55-400MH-SG3-480V	LUMEC	VALMONT 40 FT M.H., 6 FT. MAST ARM ON CONCRETE FOUNDATION	400W M.H.	480 V
TYPE B	DOMUS 55 SERIES, TYPE III CUTOFF CATALOG DMS55-250MH-SG3-480V	LUMEC	VALMONT 30 FT M.H., 6 FT. MAST ARM ON CONCRETE FOUNDATION	250W M.H.	480 V
TYPE C	DOMUS 55 SERIES, TYPE III CUTOFF CATALOG DMS55-400MH-SG3-480V	LUMEC	VALMONT 40 FT M.H., 6 FT. MAST ARM ON PARAPET WALL MOUNTED	400W M.H.	480 V

L:\ROCKFORD\08258082\Dwn\CADD\Sheets\E.Lighting.Details.03.dgn

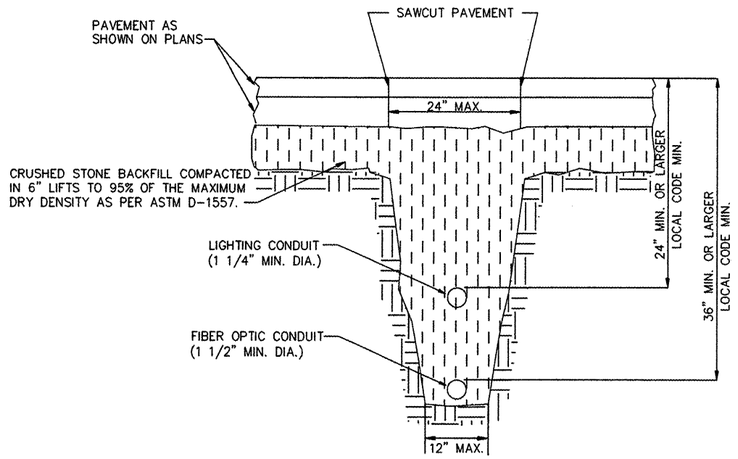

FIBER OPTICS AND STREET LIGHTING CONDUIT TRENCH

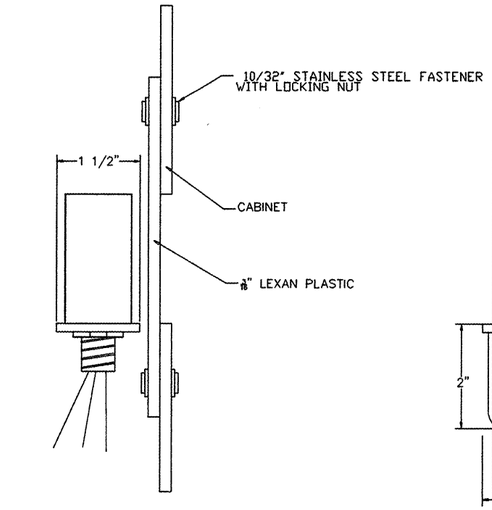

SIDE VIEW

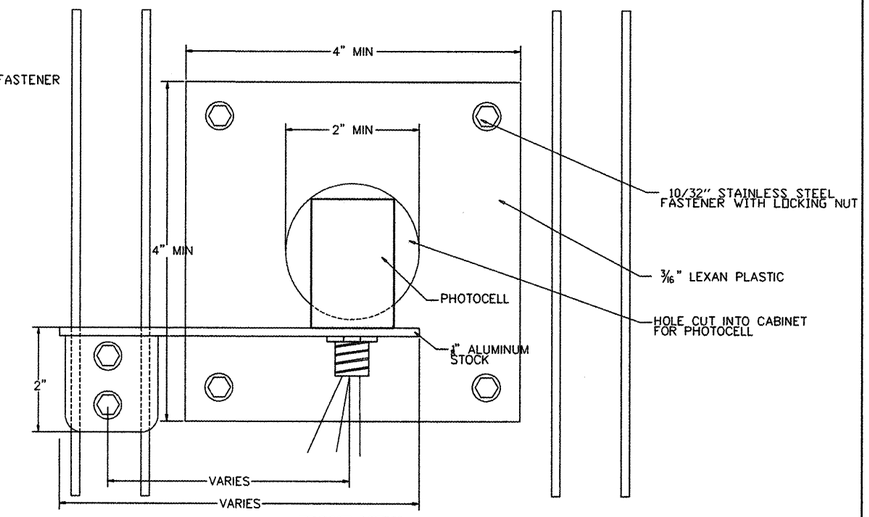

FRONT VIEW

PHOTOCELL MOUNTING DETAIL

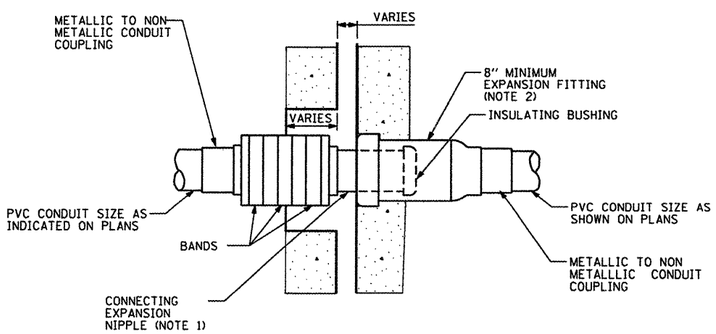

NOTES:

1. PROVIDE REQUIRED LENGTH OF CONNECTING EXPANSION NIPPLE. REFER TO STRUCTURAL DRAWINGS FOR THE EXPANSION JOINT CHARACTERISTICS
2. THE BARREL OF THE FITTING SHALL BE FULLY EMBEDDED IN THE CONCRETE OF ONE SIDE OF THE EXPANSION JOINT.
3. A CAVITY OPENING, IF REQUIRED, SHALL BE 3" (76.2 mm) LARGER DIAMETER AND A MAXIMUM DEPTH OF HALF OF THE DEFLECTION SLEEVE LENGTH. THE DEFLECTION FITTING SHALL BE CENTERED IN THE OPENING AND EMBEDDED IN THE CONCRETE ONLY UP TO THE DEFLECTION FITTING CENTER.
4. THE EXPANSION FITTING AND ALL HARDWARE AND LABOR SHALL BE INCLUDED IN CONDUIT EMBEDDED IN STRUCTURE PAY ITEM. NO SEPARATE PAYMENT WILL BE MADE.

DETAIL 1
CONDUIT EXPANSION /DEFLECTION COUPLING

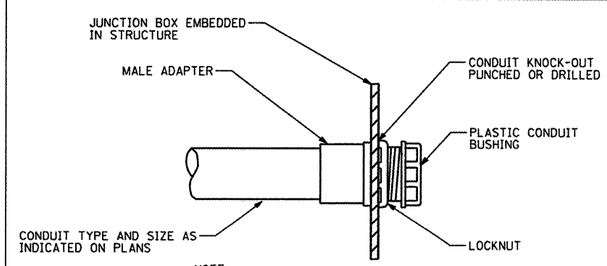

NOTE:
ALL HARDWARE AND LABOR SHALL BE INCLUDED IN THE JUNCTION BOX PAY ITEM. NO SEPARATE PAYMENTS WILL BE MADE.

DETAIL 2
CONDUIT BOX ENTRY
TYPICAL OF ALL JUNCTION BOXES
NOT TO SCALE

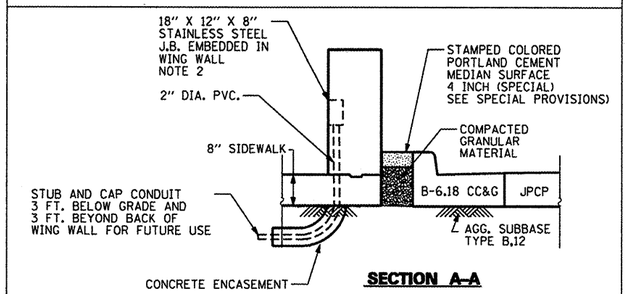

SECTION A-A

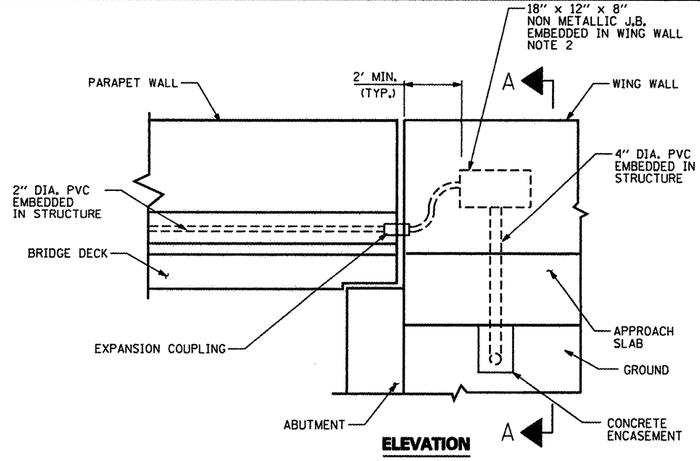

ELEVATION

NOTES:

1. CONCRETE ENCASED CONDUIT STUBBED FROM JUNCTION BOX TO BELOW GRADE AND ALL HARDWARE AND LABOR SHALL BE INCLUDED IN THE JUNCTION BOX EMBEDDED IN STRUCTURE PAY ITEM. NO SEPARATE PAYMENT WILL BE MADE.
2. IN ACCORDANCE WITH NEC 314.28(A)(3), JUNCTION BOXES SHALL BE PERMANENTLY MARKED WITH THE MAXIMUM NUMBER AND THE MAXIMUM SIZE OF CONDUCTOR PERMITTED. THE COST OF THIS WORK SHALL BE INCLUDED IN THE JUNCTION BOX PAY ITEM.

DETAIL 3
WING WALL TO PARAPET WALL CONDUIT TRANSITION

L:\ROCKFORD\8926882\D-ew\CADD.Sheets\E.Lighting.Details.04.dgn

CMT ©Copyright CMT, Inc.
CRAMFORD, MURPHY & TILLY, INC.
CONSULTING ENGINEERS
License No. 184-000613

USER NAME = Steve Prange	DESIGNED - SJP / MNB	REVISED -	
	DRAWN - ERD	REVISED -	
PLOT SCALE = 40.0000 ' / IN.	CHECKED - SJP	REVISED -	
PLOT DATE = 02/04/11	DATE - 02/04/2011	REVISED -	

CITY OF ROCKFORD
MORGAN STREET BRIDGE

ELECTRICAL DETAILS - 4

SCALE: N/A | SHEET NO. 4 OF 8 SHEETS | STA. | TO STA.

F.A. RTE.	SECTION	COUNTY	TOTAL SHEETS	SHEET NO.
5077	99-00493-00-BR	WINNEBAGO	253	122
		CONTRACT NO. 85529		

FED. ROAD DIST. NO. 2 | ILLINOIS | FED. AID PROJECT BRM-5099(65)

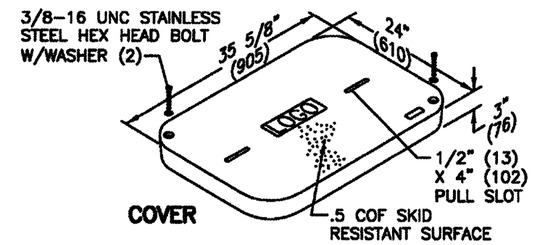

COVER

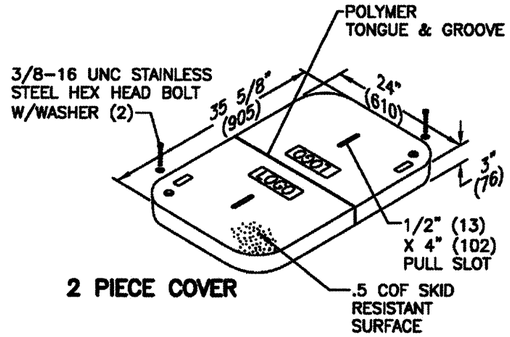

2 PIECE COVER

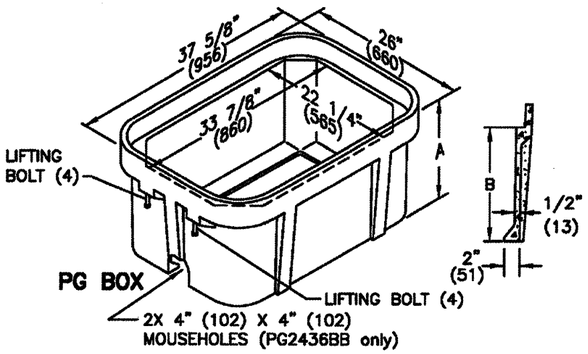

PG BOX

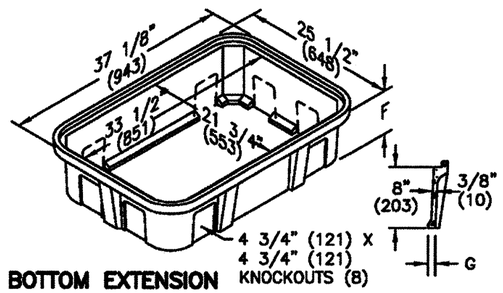

PG BOTTOM EXTENSION

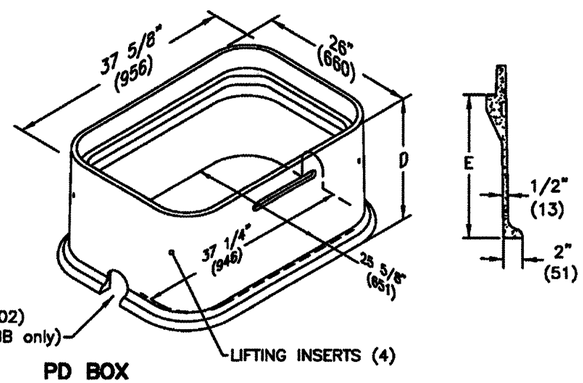

PD BOX

SPECIFICATIONS/DATA

24" x 36" PG Style (Stackable) Assembly and 24" x 36" PD Style Assembly

Covers (Blank unless logo is specified)

DESCRIPTION	PART NO.	WEIGHT #	DESIGN/TEST LOAD #	ANSI TIER*
W/2 Bolts	PG2436CA00	100 (45 kg)	8,000 / 12,000	8
Gasketed w/2 Bolts	PG2436CG00	100 (45 kg)	8,000 / 12,000	8
2-Piece w/2 Bolts	PG2436CS00	122 (55 kg)	8,000 / 12,000	8
No Bolts	PG2436WA00	100 (45 kg)	8,000 / 12,000	8
Heavy Duty w/2 Bolts	PG2436HA00	115 (52 kg)	15,000 / 22,500	15
Gasketed Heavy Duty w/2 Bolts	PG2436HG00	115 (52 kg)	15,000 / 22,500	15
Heavy Duty 2-Piece w/2 Bolts	PG2436HS00	122 (55 kg)	15,000 / 22,500	15
Heavy Duty w/2 Bolts	PG2436HH00	122 (55 kg)	22,500 / 33,750	22

- Gasketed covers and bolt grommets must be used with a gasketed box. Gaskets reduce the inflow of fluids but do not make the enclosure water tight.

PG Boxes (Stackable with self-aligning, replaceable EZ Nut) **24" - 42" Deep boxes must be used as bottom of any stack.)

DESCRIPTION	PART NO.	WEIGHT #	DIMENSION A	DIMENSION B	DESIGN/TEST LOAD #	ANSI TIER*
Open Bottom	PG2436BA18	141 (64 kg)	18" (457 mm)	15" (381 mm)	22,500 / 33,750	22
	PG2436BA24	180 (81.6 kg)	24" (610 mm)	21" (533 mm)	22,500 / 33,750	22
	PG2436BA30	196 (88.9 kg)	30" (762 mm)	27" (686 mm)	22,500 / 33,750	22
	PG2436BA36	254 (115 kg)	36" (914 mm)	33" (838 mm)	22,500 / 33,750	22
	PG2436BA42	293 (133 kg)	42" (1067 mm)	39" (991 mm)	22,500 / 33,750	22
Open Bottom w/2 Mouseholes	PG2436BB18	139 (63.1 kg)	18" (457 mm)	15" (381 mm)	22,500 / 33,750	22
	PG2436BB24	178 (80.7 kg)	24" (610 mm)	21" (533 mm)	22,500 / 33,750	22
	PG2436BB30	194 (88.0 kg)	30" (762 mm)	27" (686 mm)	22,500 / 33,750	22
	PG2436BB36	252 (114 kg)	36" (914 mm)	33" (838 mm)	22,500 / 33,750	22
	PG2436BB42	293 (133 kg)	42" (1067 mm)	39" (991 mm)	22,500 / 33,750	22
Solid Bottom	PG2436DA18	171 (78 kg)	18 1/2" (470 mm)	15" (381 mm)	22,500 / 33,750	22
	PG2436DA24	228 (103.4 kg)	24 1/2" (622 mm)	21" (533 mm)	22,500 / 33,750	22
	PG2436DA30	238 (107.0 kg)	30 1/2" (775 mm)	27" (686 mm)	22,500 / 33,750	22
	PG2436DA36	282 (128 kg)	36 1/2" (927 mm)	33" (838 mm)	22,500 / 33,750	22
	PG2436DA42	321 (146 kg)	42 1/2" (1080 mm)	39" (991 mm)	22,500 / 33,750	22

PD Boxes

DESCRIPTION	PART NO.	WEIGHT #	DIMENSION D	DIMENSION E	DESIGN/TEST LOAD #	ANSI TIER*
Open Bottom	PD2436BA18	159 (72 kg)	18" (457 mm)	15" (381 mm)	22,500 / 33,750	22
	PD2436BA26	199 (90 kg)	26" (660 mm)	23" (584 mm)	22,500 / 33,750	22
	PD2436BA48	313 (142 kg)	48" (1219 mm)	45" (1143 mm)	22,500 / 33,750	22
Open Bottom w/2 Mouseholes	PD2436BB18	157 (71 kg)	18" (457 mm)	15" (381 mm)	22,500 / 33,750	22
	PD2436BB26	197 (89 kg)	26" (660 mm)	23" (584 mm)	22,500 / 33,750	22
	PD2436BB48	311 (141 kg)	48" (1219 mm)	45" (1143 mm)	22,500 / 33,750	22
Open Bottom w/Gasket	PD2436BG18	159 (72 kg)	18" (457 mm)	15" (381 mm)	22,500 / 33,750	22
	PD2436BG26	199 (90 kg)	26" (660 mm)	23" (584 mm)	22,500 / 33,750	22
	PD2436BG48	313 (142 kg)	48" (1219 mm)	45" (1143 mm)	22,500 / 33,750	22

Extensions (For use under 18" deep box only, one per box.)

DESCRIPTION	PART NO.	WEIGHT #	DIMENSION F	DIMENSION G	DESIGN/TEST LOAD #	ANSI TIER*
Open Bottom	PG2436EA08	81 (37 kg)	8 3/4" (222 mm)	1" (25 mm)	22,500 / 33,750	22
Solid Bottom	PG2436RA08	95 (43.1 kg)	9 1/4" (235 mm)	N/A	22,500 / 33,750	22

Dimensions & weights in parentheses are metric equivalent.

* Loadings comply with ANSI/SCTE 77 (see page 9).

HANDHOLES
24"X36" PG STYLE (STACKABLE) ASSEMBLY
AND 24"X36" PD STYLE ASSEMBLY

L:\ROCKFORD\0826802\Dgn\CADD.Sheets\E.Lighting.Details.85.dgn

CMT CRAWFORD, MURPHY & TILLY, INC. CONSULTING ENGINEERS License No. 184-000613 ©Copyright CMT, Inc.

USER NAME = Steve Prange	DESIGNED - SJP / MNB	REVISED -	
	DRAWN - ERD	REVISED -	
PLOT SCALE = 40.0000 ' / IN.	CHECKED - SJP	REVISED -	
PLOT DATE = 02/04/11	DATE - 02/04/2011	REVISED -	

CITY OF ROCKFORD
MORGAN STREET BRIDGE

ELECTRICAL DETAILS – 5

SCALE: N/A | SHEET NO. 5 OF 8 SHEETS | STA. | TO STA.

F.A. RTE.	SECTION	COUNTY	TOTAL SHEETS	SHEET NO.
5077	99-00493-00-BR	WINNEBAGO	253	123

CONTRACT NO. 85529

FED. ROAD DIST. NO. 2 | ILLINOIS | FED. AID PROJECT BRM-5099(65)

LIGHT POLE FOUNDATION DEPTH TABLE
40 FT. (12.192 m) TO 47.5 FT. (14.478 m) MOUNTING HEIGHT

SOIL CONDITIONS	DESIGN DEPTH "D" OF FOUNDATION	
	SINGLE ARM POLE	TWIN ARM POLE
SOFT CLAY Qu = 0.375 TON/SQ. FT.	13'-0" (3.96 m)	15'-0" (4.57 m)
MEDIUM CLAY Qu = 0.75 TON/SQ.FT	9'-6" (2.09 m)	10'-9" (3.23 m)
STIFF CLAY Qu = 1.50 TON/SQ. FT.	7'-0" (2.13 m)	8'-0" (2.44 m)
LOOSE SAND ø = 34°	9'-0" (2.74 m)	10'-0" (3.05 m)
MEDIUM SAND ø = 37.5°	8'-3" (2.52 m)	9'-0" (2.74 m)
DENSE SAND ø = 40°	7'-9" (2.36 m)	9'-0" (2.74 m)

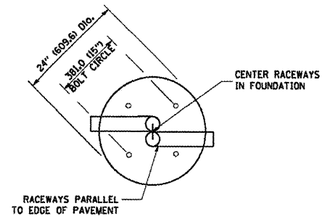

TOP VIEW

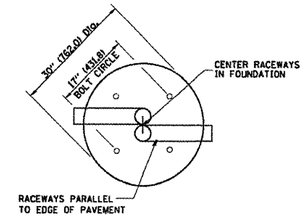

TOP VIEW

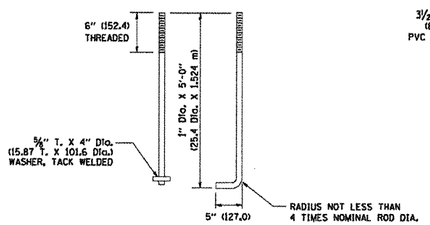

ANCHOR ROD DETAIL

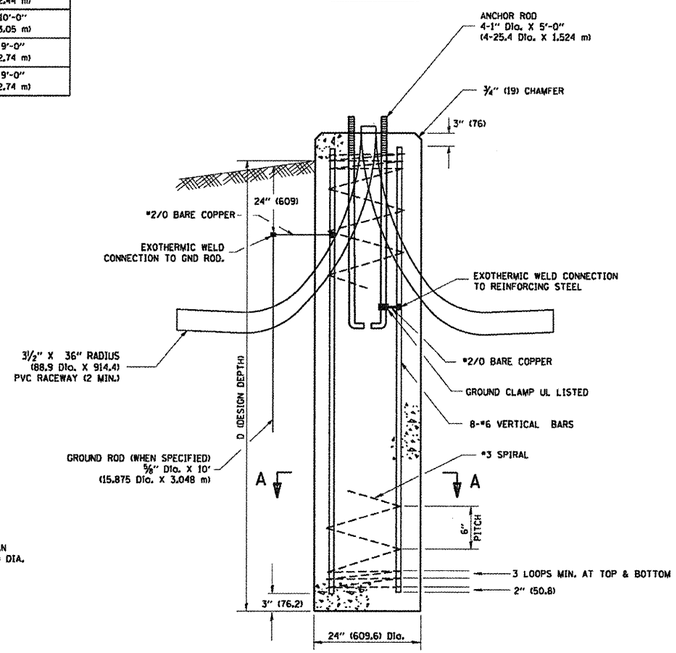

FOUNDATION DETAIL

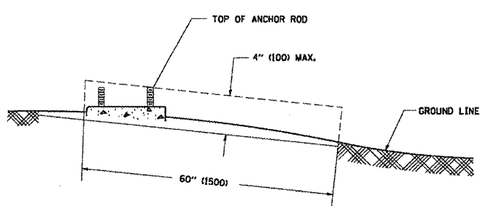

FOUNDATION EXTENSION DETAIL

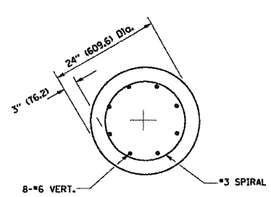

SECTION A-A

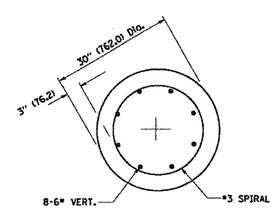

SECTION A-A

NOTES

1. ALL DIMENSIONS ARE IN INCHES (MILLIMETERS) UNLESS OTHERWISE SHOWN.
2. THE ANCHOR RODS AND RACEWAYS SHALL BE PROPERLY SECURED IN PLACE BEFORE THE CONCRETE IN PLACED.
3. THE FOUNDATION SHALL NOT PROTRUDE MORE THAN 4 IN. (100 MM) ABOVE THE FINISHED GRADE WITHIN A 60 IN. (1.5 m) CHORD ACROSS THE FOUNDATION, WITH ANCHOR RODS INCLUDED, IN ACCORDANCE WITH AASHTO GUIDELINES. IF THE FOUNDATION HEIGHT, INCLUDING ANCHOR RODS, EXTENDS BEYOND THESE SPECIFIED LIMITS, THE FOUNDATION SHALL BE REPLACED AT THE CONTRACTOR'S EXPENSE. SEE FOUNDATION EXTENSION DETAIL.
4. THE HOLE FOR THE FOUNDATION SHALL BE MADE BY DRILLING WITH AN AUGER, OF THE SAME DIAMETER AS THE FOUNDATION. IF SOIL CONDITIONS REQUIRE THE USE OF A LINER TO FORM THE HOLE, THE LINER SHALL BE WITHDRAWN AS THE CONCRETE IS DEPOSITED.
5. THE TOP OF THE FOUNDATION SHALL BE CONSTRUCTED LEVEL. A LINER OR FORM SHALL BE USED TO PRODUCE A UNIFORM SMOOTH SIDE TO THE TOP OF THE FOUNDATION. FOUNDATION TOP SHALL BE CHAMFERED 3/4-IN. (20 mm).
6. THE CONCRETE SHALL BE CLASS SI. CONCRETE SHALL CURE ACCORDING TO ARTICLE 1020.13 BEFORE LIGHT POLES ARE INSTALLED.
7. THE ANCHOR ROD SHALL BE A HOOK ROD TYPE. COLD BENDING OF THE ANCHOR ROD WILL NOT BE ALLOWED. THE RADIUS OF THE HOOK BEND SHALL NOT BE LESS THAN 4 TIMES THE NOMINAL DIAMETER OF THE ANCHOR ROD. A TACK WELDED ANCHOR ROD MAY BE SUBSTITUTED WITH THE APPROVAL OF THE ENGINEER.
8. THE ANCHOR RODS SHALL BE ACCORDING TO ASTM F1554 GRADE 725 (GRADE 105). NUTS SHALL BE HEXAGON NUTS ACCORDING TO ASTM A 194 2H OR ASTM A 563 DH, AND WASHERS SHALL BE ACCORDING TO ASTM F 436.
9. ANCHOR RODS, NUTS AND WASHERS SHALL BE COMPLETELY GALVANIZED BY EITHER THE HOT-DIPPED PROCESS CONFORMING WITH AASHTO M 232, THE MECHANICAL PLATING METHOD CONFORMING TO AASHTO M 298, CLASS 50 WITH A MAXIMUM COATING THICKNESS OF 150 UM(6 MILS) OR THE ELECTROLYTIC PROCESS ACCORDING TO ASTM F 1136.
10. THE ANCHOR RODS SHALL BE THREADED A MINIMUM OF 6 INCHES (150 mm) WITH A MINIMUM OF 3 INCHES (75 mm) OF THREADED ANCHOR ROD EMBEDDED IN THE FOUNDATION.
11. ANCHOR RODS SHALL PROJECT 2 3/4" (69.9 mm) ABOVE THE TOP OF THE FOUNDATION. IF BREAKAWAY COUPLINGS ARE SPECIFIED, THE CONTRACTOR SHALL CAREFULLY COORDINATE THE ANCHOR ROD PROJECTION WITH THE INSTALLATION REQUIREMENTS OF THE BREAKAWAY COUPLINGS.
12. THE CONTRACTOR SHALL USE A #3 SPIRAL AT 6" (152.4 mm) PITCH OR MAY SUBSTITUTE #3 TIES AT 12" (304.8 mm) O.C. WITH THE APPROVAL OF THE ENGINEER.
13. THE CABLE TRENCHES AND FOUNDATION SHALL BE BACK FILLED AND COMPACTED AS SPECIFIED BEFORE THE LIGHT POLE IS ERECTED.
14. THE RACEWAYS SHALL PROJECT 1" (25.4 mm) ABOVE THE TOP OF THE FOUNDATION.

LIGHT POLE FOUNDATION
40' (12.192 m) TO 47 1/2' (14.478 m) M.H. 15" (381 mm) BOLT CIRCLE

L:\ROCKFORD\0926002\Cross\CADD_Sheets\E_Lighting_Details_86.dgn

CMT ©Copyright CMT, Inc. CRAWFORD, MURPHY & TILLY, INC. CONSULTING ENGINEERS License No. 184-000613	USER NAME = Steve Prange	DESIGNED - SJP / MNB	REVISED -	CITY OF ROCKFORD MORGAN STREET BRIDGE	ELECTRICAL DETAILS – 6	F.A. RTE.	SECTION	COUNTY	TOTAL SHEETS / SHEET NO.
		DRAWN - ERD	REVISED -			5077	99-00493-00-BR	WINNEBAGO	253 / 124
	PLOT SCALE = 40.0000 ' / IN.	CHECKED - SJP	REVISED -					CONTRACT NO. 85529	
	PLOT DATE = 02/04/11	DATE - 02/04/2011	REVISED -		SCALE: N/A / SHEET NO. 6 OF 8 SHEETS / STA. / TO STA.	FED. ROAD DIST. NO. 2	ILLINOIS	FED. AID PROJECT BRM-5099(65)	

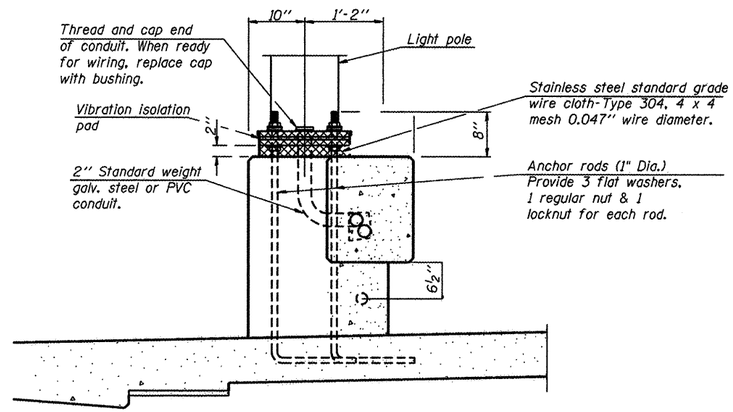

SECTION A-A

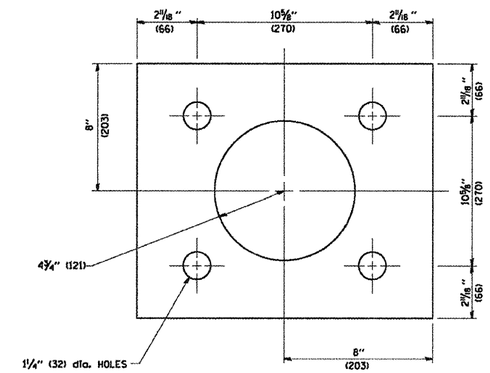

LEVELING PLATE DETAIL

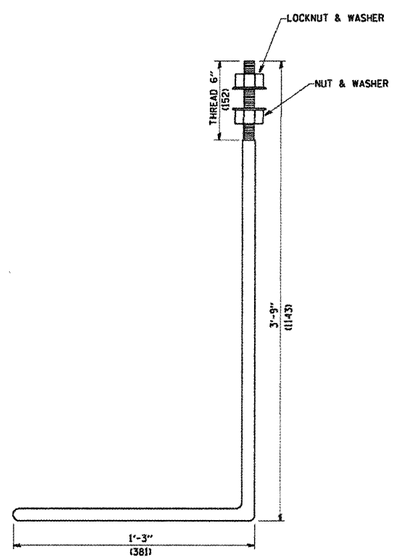

1" (25.4) dia. ANCHOR BOLT

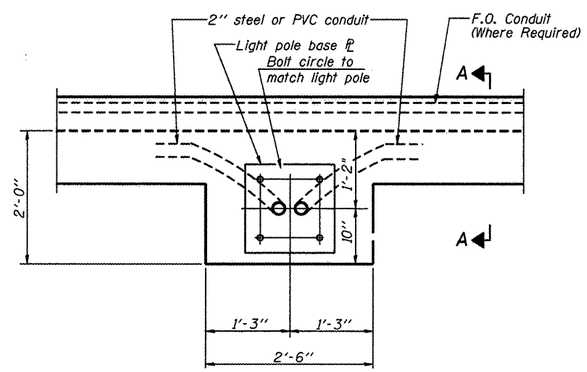

PLAN

NOTES

1. ALL DIMENSIONS ARE IN INCHES UNLESS OTHERWISE SHOWN.
2. LEVEL LIGHT POLE PLATES, USING THE FLANGE NUTS, PRIOR TO POURING THE PARAPET WALL. THE TOP OF THE PLATE SHALL BE AT THE SAME ELEVATION AS THE FINISHED CONCRETE PARAPET.
3. THE COST OF ANCHOR BOLTS, LEVELING PLATE AND FOUNDATION IS INCLUDED IN THE COST OF THE LIGHT POLE.
4. SEE STRUCTURAL PLAN SHEET 139 FOR LIGHT BLISTER REINFORCEMENT DETAILS.

LIGHT POLE MOUNTED ON CONCRETE PARAPET WALL
15" BOLT CIRCLE

L:\ROCKFORD\08926892\D-a\CADD\Sheets\E.Lighting.Details.07.dgn

CMT
CRAWFORD, MURPHY & TILLY, INC.
CONSULTING ENGINEERS
License No. 184-000613

USER NAME = Steve Prange	DESIGNED - SJP / MNB	REVISED -	
	DRAWN - ERD	REVISED -	
PLOT SCALE = 40.0000 ' / IN.	CHECKED - SJP	REVISED -	
PLOT DATE = 02/04/11	DATE - 02/04/2011	REVISED -	

CITY OF ROCKFORD
MORGAN STREET BRIDGE

ELECTRICAL DETAILS – 7

SCALE: N/A | SHEET NO. 7 OF 8 SHEETS | STA. TO STA.

F.A. RTE.	SECTION	COUNTY	TOTAL SHEETS	SHEET NO.
5077	99-00493-00-BR	WINNEBAGO	253	125
		CONTRACT NO. 85529		

FED. ROAD DIST. NO. 2 | ILLINOIS | FED. AID PROJECT BRM-5099(65)

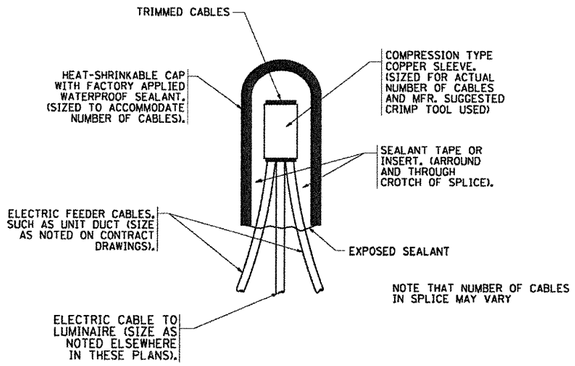

TYPICAL SPLICE DETAIL

N.T.S.

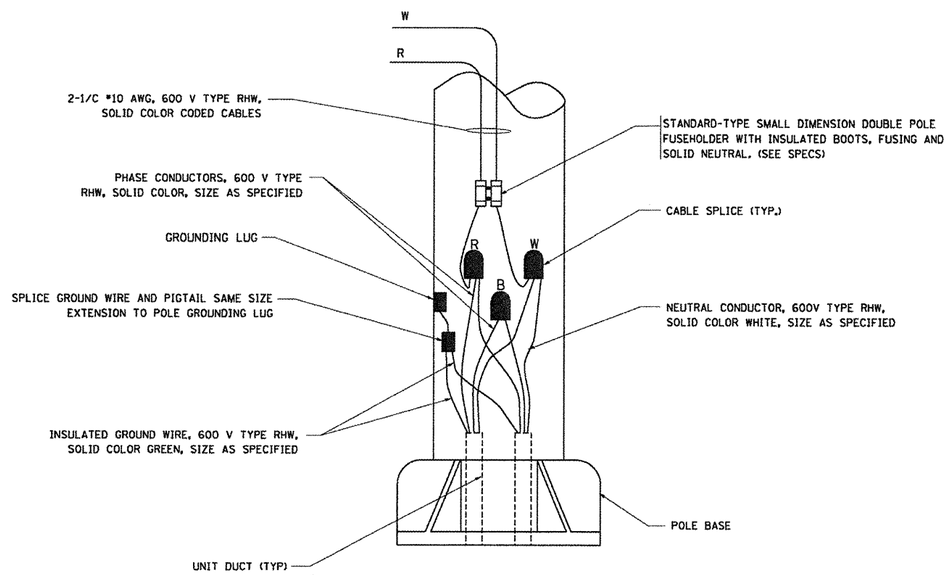

POLE WIRING DETAIL

N.T.S.

MISC. ELECTRICAL DETAILS
SHEET A

L:\ROCKFORD\08260802\Dgn\CADD.Sheets\E.Lighting.Details.08.dgn

CMT ©Copyright CMT, Inc. CRAWFORD, MURPHY & TILLY, INC. CONSULTING ENGINEERS License No. 184-000613	USER NAME = Steve Prange	DESIGNED - SJP / MNB	REVISED -	CITY OF ROCKFORD MORGAN STREET BRIDGE	ELECTRICAL DETAILS – 8	F.A. RTE.	SECTION	COUNTY	TOTAL SHEETS	SHEET NO.
		DRAWN - ERD	REVISED -			5077	99-00493-00-BR	WINNEBAGO	253	126
	PLOT SCALE = 40.0000 ' / IN.	CHECKED - SJP	REVISED -					CONTRACT NO. 85529		
	PLOT DATE = 02/04/11	DATE - 02/04/2011	REVISED -		SCALE: N/A / SHEET NO. 8 OF 8 SHEETS / STA. / TO STA.	FED. ROAD DIST. NO. 2	ILLINOIS	FED. AID PROJECT BRM-5099(65)		

BENCH MARK:

#25 Chiseled "X" on existing sidewalk Sta. 42+59.19, 21.11' Rt., Elevation = 709.61
#28 Iron Pin (5/8") on west side of RR track Sta. 51+52.10, 43.04' Lt., Elevation = 710.40

EXISTING STRUCTURE:

S.N. 101-6132 , originally built in 1916 and rehabilitated in 1959, 1983 and 1993. The existing structure is an eight span open spandrel reinforced concrete arch bridge. West approach is a single span with prestressed precast concrete box beams. East approach is a two span structure with prestressed precast concrete box beams. Substructure consists of concrete abutments and piers supported on timber piles. Back to back of approach-abutment measures 797'-7 5/8" and out to out width of deck is 50'-0". Structure is to be removed and replaced using road closure. Traffic is to be detoured.

PROPOSED IMPROVEMENTS:

Existing structure to be removed and replaced with a three span bridge with composite welded plate girder end spans and a steel tied arch middle span supported on concrete abutments and piers. The proposed structure is 503'-3 1/8" back to back of abutments and 73'-2" out to out of deck.

Salvage name plate, metal pedestrian railing along southside of bridge, entire length.

DESIGN SPECIFICATIONS

2002 AASHTO "Standard Specifications for Highway Bridges" and Interims through 2005

ASCE/SEI 7-05 "Minimum Design Loads for Buildings and Other Structures".

DESIGN STRESSES

FIELD UNITS

f'c = 3,500 psi
fy = 60,000 psi (Reinforcement)
fy = 50,000 psi (M270 Grade 50W)

LOADING HS25

Allow 50#/sq. ft. for fut. wearing surface.
Vessel Collision: none

SEISMIC DATA

Seismic Performance Category (SPC) = A
Horiz. Bedrock Acceleration Coefficient (A) = 0.033g
Site Coefficient (S) = 1.2

DESIGN SCOUR ELEVATION TABLE

	W. Abut.	Pier 1	Pier 2	E. Abut.
Design Scour Elevation (ft.)	690.11	682.93	696.09	726.71

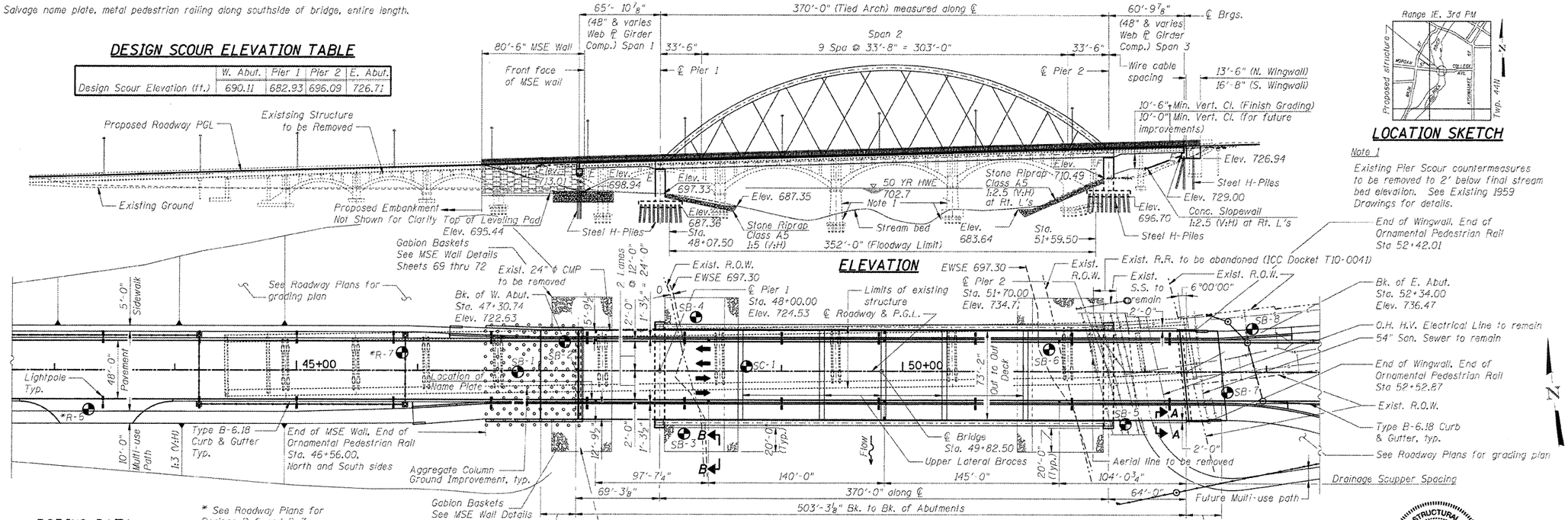

* See Roadway Plans for Borings R-6 and R-7

PLAN

(See Sheet 2 for Sections A-A and B-B)

LOCATION SKETCH

Note 1

Existing Pier Scour countermeasures to be removed to 2' below final stream bed elevation. See Existing 1959 Drawings for details.

BORING DATA

Boring No.	Station	Offset
*R-6	43+28.32	32.55' RT.
*R-7	45+87.33	14.61' LT.
SB-1	46+82.22	1.02' RT.
SB-2	47+21.39	23.72' LT.
SB-3	48+19.89	51.94' RT.
SB-4	48+29.52	44.00' LT.
SC-1	48+71.26	3.72' LT.
SB-5	51+83.95	43.36' RT.
SB-6	51+21.36	18.06' LT.
SB-7	52+68.13	16.92' RT.
SB-8	52+88.48	34.95' LT.

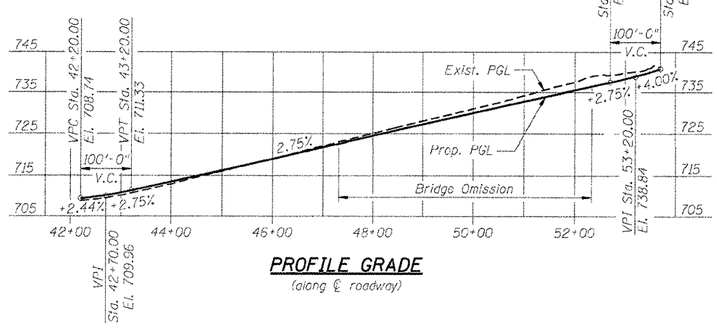

PROFILE GRADE

(along ℄ roadway)

LICENSED STRUCTURAL ENGINEER PRABHU ANANTHAN 081-006743 STATE OF ILLINOIS
03/1/2011
EXPIRES 11/30/2012

LICENSED STRUCTURAL ENGINEER RICHARD J. KERHLIKAR 004575 CHICAGO, ILLINOIS STATE OF ILLINOIS
02.11.2011
EXPIRES 11.30.2012

LICENSED STRUCTURAL ENGINEER NATALIE A. MCCOMBS 081-006576 STATE OF ILLINOIS
2-11-11

"I certify that to best of my knowledge, information and belief, this design is structurally adequate for the design loading shown on the plans. The design is an economical one for the style of the structure and complies with the requirements of the current "AASHTO Standard Specifications for Highway Bridges, 17th Edition."

Peer review by HNTB Corporation, Kansas City finds that the tied arch span in this structure conforms to the design criteria and is structurally adequate for the proposed loads.
Natalie A. McCombs
081-006576
Exp. 11-30-2012

WATERWAY INFORMATION

Drainage Area = 6535 sq. mi. Low Grade Elev. 721.3 @ Sta. 47+30

Flood	Freq. Yr.	Q C.F.S.	Opening Sq. Ft. Exist.	Opening Sq. Ft. Prop.	Nat. H.W.E.	Head - Ft. Exist.	Head - Ft. Prop.	Headwater El. Exist.	Headwater El. Prop.
Design	50	39500	4610	6384	702.7	0	0	702.7	702.7
Base	100	44500	5090	6672	703.6	0	0	703.6	703.6
Overtopping	N/A	N/A	N/A	N/A	N/A	N/A	N/A	N/A	N/A
Max. Calc.	500	56500	7200	7824	707.2	0	0	707.2	707.2

GENERAL PLAN & ELEVATION
MORGAN STREET OVER ROCK RIVER
F.A.U. ROUTE 5077 - SEC. 99-00493-00-BR
WINNEBAGO COUNTY
STATION 49+82.50
STRUCTURE NO. 101-6108 (NEW)

CMT ©Copyright CMT, Inc. CRAWFORD, MURPHY & TILLY, INC. CONSULTING ENGINEERS License No. 184-000613

HNTB

DESIGNED	PA, JDJ, BPD, CJW	REVISED	-
DRAWN	GLD	REVISED	-
CHECKED	RJK	REVISED	-
DATE	02/04/2011	REVISED	-

CITY OF ROCKFORD
MORGAN STREET BRIDGE

GENERAL PLAN & ELEVATION
STRUCTURE NO. 101-6108

SCALE: | SHEET NO. 1 OF 79 SHEETS | STA. 47+00.74 TO STA. 52+63.50

F.A.U. RTE.	SECTION	COUNTY	TOTAL SHEETS	SHEET NO.
5077	99-00493-00-BR	WINNEBAGO	253	127
		CONTRACT NO. 85529		

FED. ROAD DIST. NO. 2 ILLINOIS FED. AID PROJECT BRM-5099(65)

L:\ROCKFORD\B0262823\Dgn\101G10_Sheet01-S_01_Plan and Elevation.dgn

INDEX OF SHEETS

GENERAL NOTES

1. Fasteners shall be AASHTO M164 Type 3, bolts. Bolts $\frac{7}{8}$ in. ϕ in holes $\frac{15}{16}$ in. ϕ, or bolts 1 in. ϕ in holes $1\frac{1}{16}$ in. ϕ unless otherwise noted.
2. Calculated weight of Structural Steel:
   a: Arch span - Primary members = 2,587,390
   b: Approach span - Girder and Cross frame = 290,950
   c: Arch span - Intermediate floorbeam, Stringer and Lower lateral bracing = 836,430
   d: Bolts and splices = 561,340
3. All structural steel shall be AASHTO M 270 Grade 50W. Steel designated as M270 Grade 50 T3, M270 Grade 50 F3 (FCM), or "NTR" shall conform to mandatory supplemental impact/notch toughness properties for Zone 3.
4. No field welding is permitted except as specified in the contract documents.
5. Reinforcement bars shall conform to the requirements of ASTM A 706 Gr 60.
6. Reinforcement bars designated (E) shall be epoxy coated.
7. If the Contractor elects to use cantilever forming brackets on the exterior beams or girders, the brackets shall be placed at the same locations as required for the hardwood blocks in Article 503.06(b) of the Standard Specifications. If additional cantilever forming brackets are required, hardwood blocking shall be wedged between the exterior and first interior beam at each of these additional bracket locations.
8. Bearing seat surfaces shall be constructed or adjusted to their designated elevations within a tolerance of $\frac{1}{8}$ inch (0.01 ft.). Adjustment shall be made either by grinding the surface or by shimming the bearings.
9. Concrete Sealer shall be applied to all exposed surfaces of the backwalls, bridge seats, and front faces of pile caps of the West and East Abutments.
10. The Inorganic Zinc Rich Primer / Acrylic / Acrylic Paint System shall be used for shop and field painting of new structural steel except where otherwise noted. The color of the final finish coat for all interior exposed steel surfaces shall be gray, Munsell No. 5B 7/1. The interior surfaces of all box section of the Tied Arch structure shall be primed and painted white. The color of the final finish coat for the exterior and bottom flange of the Approach Span fascia beams shall be Light Grey, Munsell No. N8. The color of the final finish coat for the exterior surfaces of the Tied Arch structure shall be Light Grey, Munsell No. N8. See Special Provision for "Cleaning and Painting New Metal Structures.
11. Layout of slope protection system may be varied in the field to suit ground conditions as directed by the Engineer.
12. U.N.O. denotes Unless Noted Otherwise.
13. A sign which reads, "DANGER - CONFINED SPACE - ENTER BY PERMIT ONLY" and meets OSHA Standard 1910.146 shall be permanently affixed (welds not permitted) onto each access opening on the structure. The cost of the sign and attachement hardware shall be included in "Furnishing and Erecting Structural Steel". The sign shall be fabricated from steel plate 7"x10"x0.08" and shall be in accordance with the Standard Specifications.

TIED ARCH WARNING SIGN
OSHA Std. 1910.146

ROCK RIVER
BUILT 20__ BY
CITY OF ROCKFORD
SEC. 99-00493-00-BR
FA RTE 5077 STA. 49+82.50
STR. NO. 101-6108 LOADING HS-25

NAME PLATE
See Std. 515001

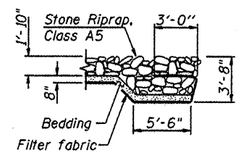

SECTION B-B

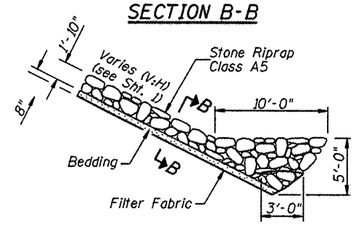

SECTION THRU RIPRAP SLOPEWALL
(Horiz. dim. @ Rt. L's)

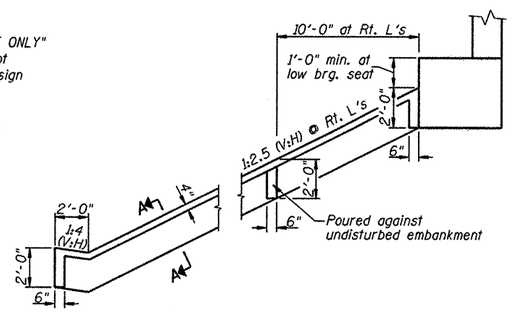

SECTION THRU CONCRETE SLOPEWALL
(Horiz. dim. @ Rt. L's)

Slope wall shall be reinforced with welded wire fabric, 6 in. x 6 in. - W4.0 x W4.0, weighing 58 lbs. per 100 sq. ft.

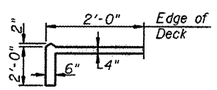

SECTION A-A

TOTAL BILL OF MATERIAL

Item	Unit	Super	Sub	Total
Stone Riprap, Class A5	Sq Yd	-	1,961	1,961
Filter Fabric	Sq Yd	-	2,033	2,033
Gabions	Cu Yd	-	1,450	1,450
Removal of Existing Structures	Each	-	-	1
Structure Excavation	Cu Yd	-	2,995	2,995
Cofferdam Excavation	Cu Yd	-	1,130	1,130
Cofferdam (Location 1)	Each	-	2	2
Concrete Structures	Cu Yd	45.3	1,259.4	1,304.7
Concrete Superstructures	Cu Yd	1,288.7	-	1,288.7
Bridge Deck Grooving	Sq. Yd.	3,088	-	3,088
Seal Coat Concrete	Cu Yd	-	229.1	229.1
Concrete Encasement	Cu Yd	-	6.3	6.3
Form Liner Textured Surface	Sq Ft	-	1,627	1,627
Protective Coat	Sq Yd	5,054	34	5,088
Furnishing and Erecting Structural Steel	L Sum	1	-	1
Stud Shear Connectors	Each	25,881	-	25,881
Reinforcement Bars	Pound	-	1,510	1,510
Reinforcement Bars, Epoxy Coated	Pound	361,560	163,410	524,970
Bar Splicers	Each	-	148	148
Slope Wall 4 Inch	Sq Yd	-	296	296
Furnishing Steel Piles HP12x53	Foot	-	20,196	20,196
Driving Piles	Foot	-	20,196	20,196
Test Pile Steel HP12x53	Each	-	4	4
Pile Shoes	Each	-	229	229
Name Plates	Each	1	-	1
Preformed Joint Strip Seal	Foot	74	-	74
Finger Plate Expansion Joint, 6½"	Foot	72	-	72
Elastomeric Bearing Assembly, Type I	Each	9		9
Elastomeric Bearing Assembly, Type III	Each	9	-	9
Anchor Bolts, 1"	Each	36	-	36
Anchor Bolts, 1½"	Each	16	-	16
Anchor Bolts, 2"	Each	16	-	16
Concrete Sealer	Sq Ft	-	1,778	1,778
Geocomposite Wall Drain	Sq Yd	-	78	78
Anti-Graffiti Protection System	Sq Ft	-	10,921	10,921
High Load Multi-Rotational Bearings, Fixed - 2750k	Each	2	-	2
Aggregate Column Ground Improvement	L Sum	-	1	1
Porous Granular Embankment, Special	Cu Yd	-	153	153
Bicycle Railing, Special	Foot	1,253	-	1,253
Parapet Railing, Special	Foot	1,281	-	1,281
High Load Multi-Rotational Bearings, Guided Expansion - 2800K	Each	2	-	2
Drainage Scuppers, DS-12	Each	12	-	12
Mechanically Stabilized Earth Retaining Wall	Sq Ft	-	5,163	5,163
Pipe Underdrains for Structures 4"	Foot	-	80	80

Note: The cost of salvaging the existing Name Plate and Metal Pedestrian Rail will be included in Removal of Existing Structures. See Special Provisions.

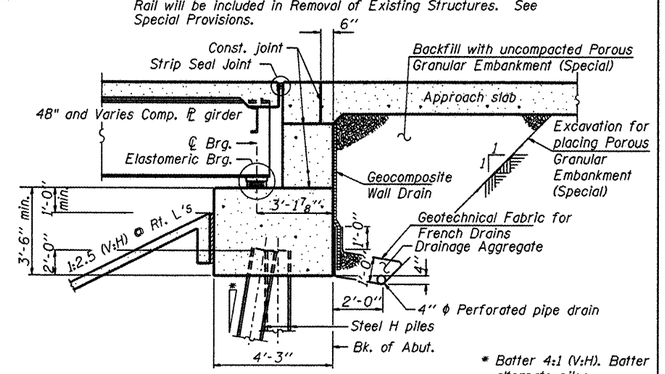

* Batter 4:1 (V:H). Batter alternate piles.

SECTION THRU EAST ABUTMENT
(Horiz. dim. @ Rt. L's)

L:\ROCKFORD\9826882\Dwn\CADD_Sheets\S_02_Notes_BDK.dgn

CMT ©Copyright CMT, Inc.
CRAWFORD, MURPHY & TILLY, INC.
CONSULTING ENGINEERS
License No. 184-000613

HNTB

DESIGNED - PA, JDJ, BPD, CJW	REVISED -		
DRAWN - GLD	REVISED -		
CHECKED - RJK	REVISED -		
DATE - 02/04/2011	REVISED -		

CITY OF ROCKFORD
MORGAN STREET BRIDGE

GENERAL DATA
STRUCTURE NO. 101-6108

SCALE: | SHEET NO. 2 OF 79 SHEETS | STA. 47+00.74 TO STA. 52+63.50

F.A.U. RTE.	SECTION	COUNTY	TOTAL SHEETS	SHEET NO.
5077	99-00493-00-BR	WINNEBAGO	253	128

CONTRACT NO. 85529

FED. ROAD DIST. NO. 2 | ILLINOIS | FED. AID PROJECT BRM-5099(65)

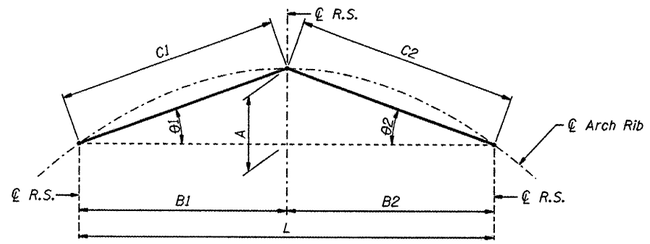

LAYDOWN DIMENSIONS

UNITS: FEET, DEGREES

RIB SECTION	C1	θ1	C2	θ2	A	B1	B2	L
RS1 to RS3	29.020	4.048	51.583	2.276	2.049	28.948	51.542	80.490
RS2 to RS4	51.583	3.623	38.364	4.874	3.260	51.480	38.225	89.705
RS3 to RS5	38.364	5.455	48.537	4.309	3.647	38.190	48.399	86.589
RS4 to RS6	48.537	4.228	34.467	5.959	3.579	48.405	34.281	82.686
RS5 to RS7	34.467	5.959	48.537	4.228	3.578	34.281	48.405	82.686
RS6 to RS8	48.537	4.309	38.364	5.455	3.647	48.399	38.190	86.589
RS7 to RS9	38.364	4.874	51.583	3.623	3.260	38.225	51.480	89.705
RS8 to RS10	51.583	2.278	29.020	4.052	2.051	51.542	28.948	80.490

Fabrication Laydown:

1. *The contractor shall verify deflections, camber, and laydown dimensions shown on the plans.*
2. *Arch ribs shall be cambered as shown on Sheet 29 of 79.*
3. *Tie Girders shall be cambered as shown on Sheet 29 of 79.*
4. *Rib lengths shall be verified and field splices fitted by progressive laydown of three rib sections. The table shows dimensions for any two adjacent sections.*
5. *Tie Girder lengths shall be verified and field splices fitted by progressive laydown of three tie girder sections.*
6. *See Special Provisions for additional requirements.*

Erection Procedure Limitations:

1. *If existing or proposed foundations are used to support falsework, an erection analysis shall be submitted to the Engineer for review.*
2. *If erection towers are used, potential obstacles shall be identified by on-site inspection and resolved prior to bid.*
3. *The contractor must submit his own detailed erection procedures for approval. The ribs and tie girders must be erected and repositioned if needed so that the final shape and location will be as shown in these plans. The erection analysis shall include erection forces on Pier 1 and Pier 2 and an analysis of these same piers.*
4. *Erection of Floor system shall follow procedure described on this sheet.*
5. *Erect hangers and deck structural steel symmetrically so as to not lock-in arch distortions.*
6. *Provisions shall be made so that the expansion bearings will be in their final (neutral) position as indicated on the bearing sheets after erection is complete.*
7. *See Special Provisions for additional requirements.*

Erection Procedure for Floor System:

1. *Erect floorbeams and make connection to tie girder.*
2. *Erect stringers and fully bolt all splice plates for the fixed connections.*
3. *For the stringer slotted connection plates, all bolts shall be tightened to a "finger tight" condition only. Any bolts tightened to more than "finger tight" shall be loosened prior to placing any deck concrete.*
4. *Deck concrete for pours 1 thru 8 shall be placed in the order shown on sheet 4 of 79.*
5. *After deck concrete for pours 1 thru 8 has achieved design strength, all bolts in the stringer slotted connection shall be fully tightened.*
6. *Deck concrete for pours 9 thru 15 shall be placed in the order shown on sheet 4 of 79.*
7. *See Special Provisions for additional requirements.*

CMT
CRAWFORD, MURPHY & TILLY, INC.
CONSULTING ENGINEERS
License No. 184-000613

HNTB

DESIGNED - PA, JDJ, BPD, CJW	REVISED -		
DRAWN - GLD	REVISED -		
CHECKED - RJK	REVISED -		
DATE - 02/04/2011	REVISED -		

CITY OF ROCKFORD
MORGAN STREET BRIDGE

ERECTION SEQUENCE
STRUCTURE NO. 101-6108

SCALE: | SHEET NO. 3 OF 79 SHEETS | STA. 47+00.74 TO STA. 52+63.50

F.A.U. RTE.	SECTION	COUNTY	TOTAL SHEETS	SHEET NO.
5077	99-00493-00-BR	WINNEBAGO	253	129

CONTRACT NO. 85529

FED. ROAD DIST. NO. 2 | ILLINOIS | FED. AID PROJECT BRM-5099(65)

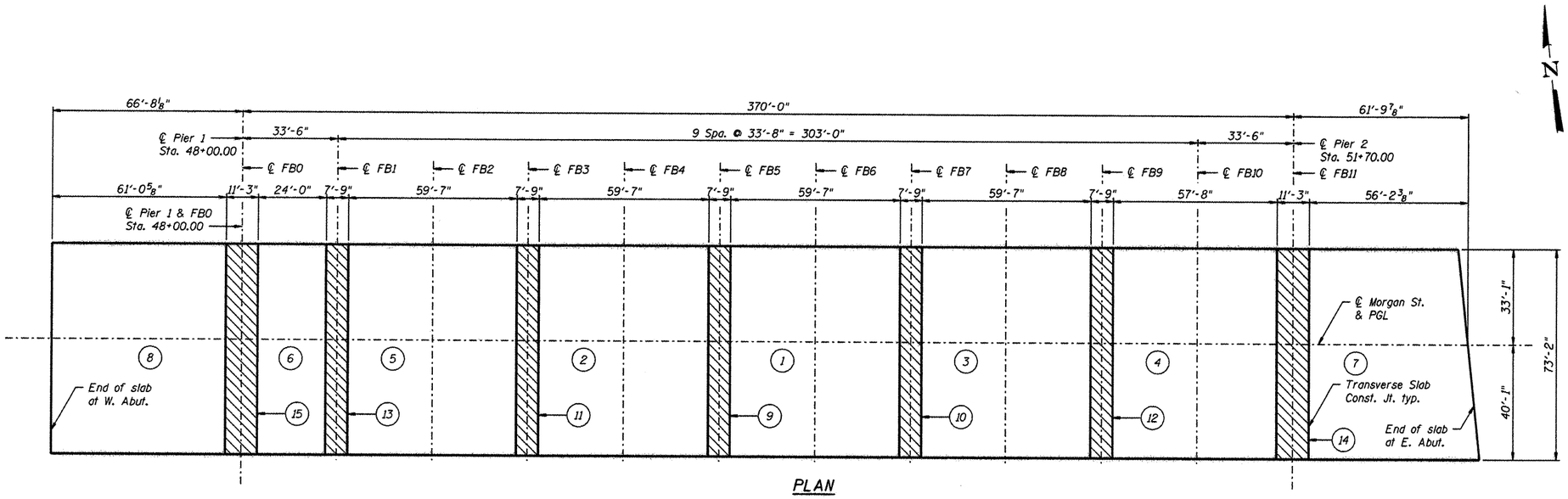

PLAN

CONSTRUCTION SEQUENCE

1. Cast slab pours 1-8.
2. Tighten stringer to floorbeam connection bolts at slotted hole locations.
3. Cast closure pours 9-15.

CONCRETE PLACING SEQUENCE

Circled numbers indicate placing sequence. There are no alternate placing sequences allowed. The contractor may place barrier rail continuously from one end to the other.

NOTE:

When the deck pour is stopped for the day at one or more of the transverse bonded construction joints in the deck pouring sequence as shown, the next pour shall not be made until both of the following are met:

1. At least 72 hours shall have elapsed from the end of the previous pour.
2. The concrete strength shall have attained a minimum flexural strength of 650 psi or a minimum compressive strength of 3500 psi.

L:\ROCKFORD\08526892\Ds-ew\CA00_Sheets\S_B5_Deck Pouring Sequence.dgn

CMT ©Copyright CMT, Inc. CRAWFORD, MURPHY & TILLY, INC. CONSULTING ENGINEERS License No. 184-000613	HNTB	DESIGNED - PA, JDJ, BPD, CJW	REVISED -	CITY OF ROCKFORD MORGAN STREET BRIDGE	DECK POURING SEQUENCE STRUCTURE NO. 101-6108
		DRAWN - GLD	REVISED -		
		CHECKED - RJK	REVISED -		
		DATE - 02/04/2011	REVISED -		

SCALE: | SHEET NO. 4 OF 79 SHEETS | STA. 47+00.74 TO STA. 52+63.50

F.A.U. RTE.	SECTION	COUNTY	TOTAL SHEETS	SHEET NO.
5077	99-00493-00-BR	WINNEBAGO	253	130

CONTRACT NO. 85529

FED. ROAD DIST. NO. 2 | ILLINOIS | FED. AID PROJECT BRM-5099(65)

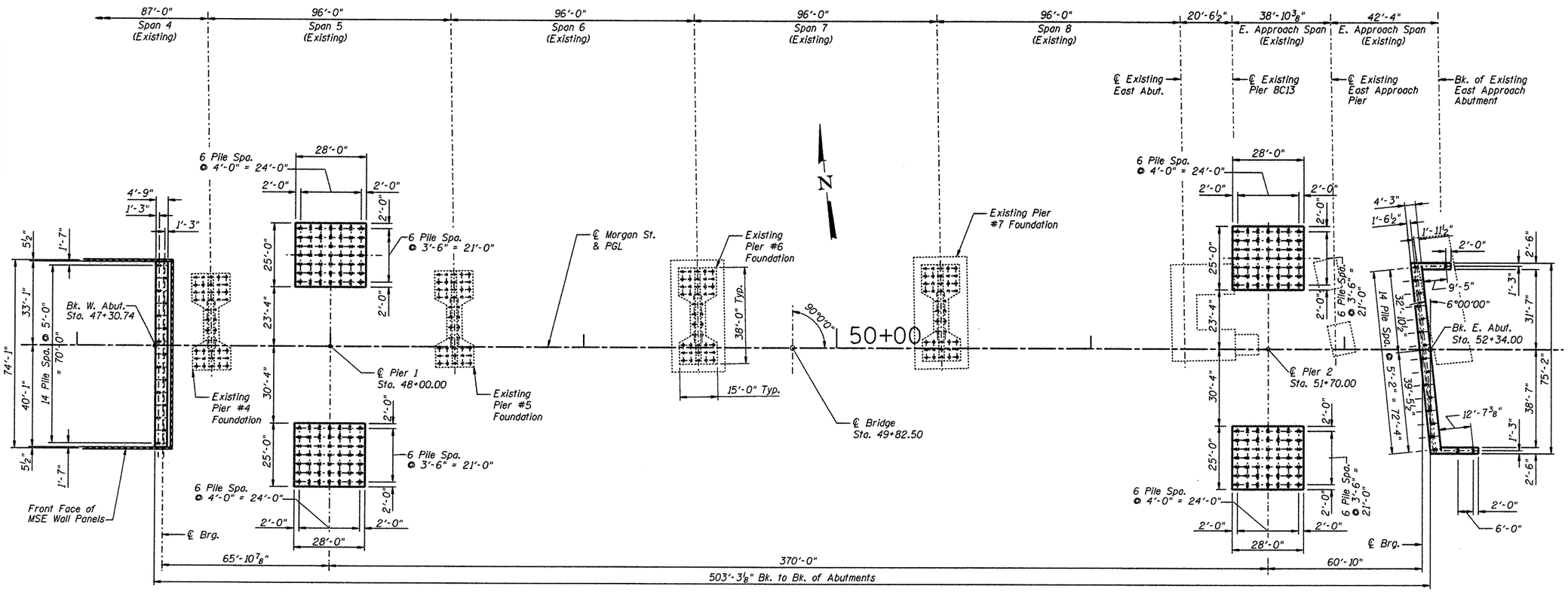

FOOTING LAYOUT

Notes:
1. See Sheets 66 thru 68 of 79 for Abutment details.
2. See Sheets 69 thru 72 of 79 for MSE Wall details.
3. See Sheets 73 and 74 of 79 for Pier details.

L:\ROCKFORD\82826822\Drawn\CADD_Sheets\S_05_Footing Layout.dgn

CMT ©Copyright CMT, Inc. CRAWFORD, MURPHY & TILLY, INC. CONSULTING ENGINEERS License No. 184-000613	HNTB	DESIGNED - PA, JDJ, BPD, CJW	REVISED -	CITY OF ROCKFORD MORGAN STREET BRIDGE	FOOTING LAYOUT STRUCTURE NO. 101-6108	F.A.U. RTE.	SECTION	COUNTY	TOTAL SHEETS	SHEET NO.
		DRAWN - GLD	REVISED -			5077	99-00493-00-BR	WINNEBAGO	253	131
		CHECKED - RJK	REVISED -					CONTRACT NO. 85529		
		DATE - 02/04/2011	REVISED -		SCALE: SHEET NO. 5 OF 79 SHEETS STA. 47+00.74 TO STA. 52+63.50	FED. ROAD DIST. NO. 2	ILLINOIS	FED. AID PROJECT BRM-5099(65)		

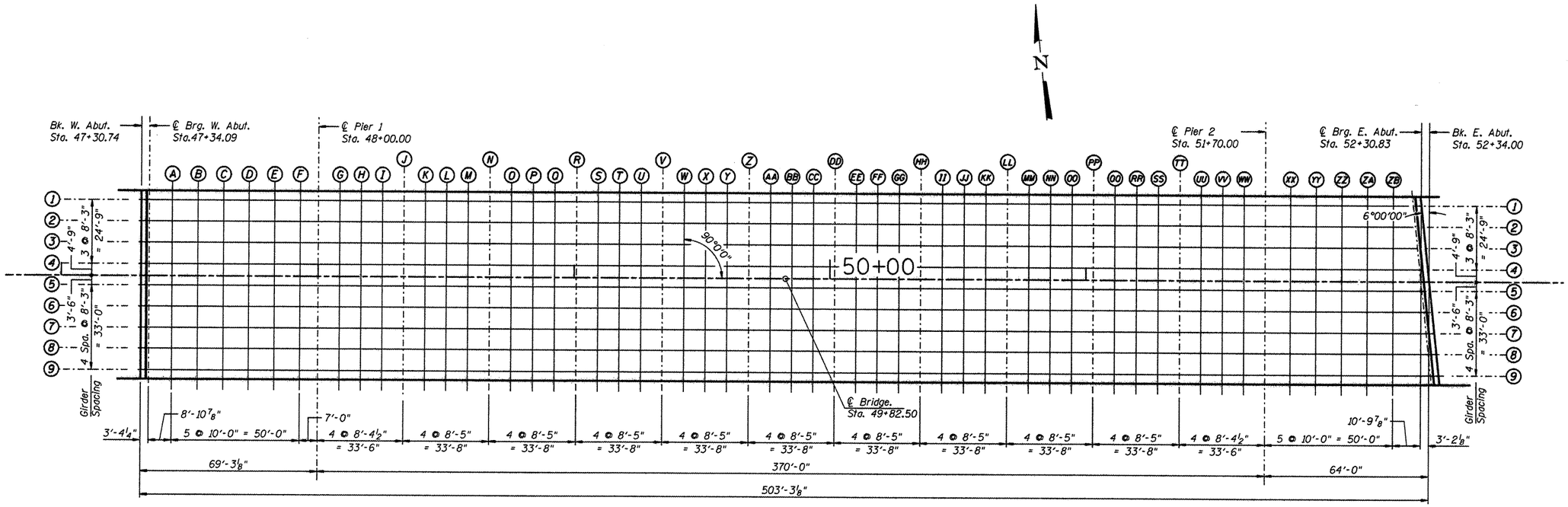

PLAN

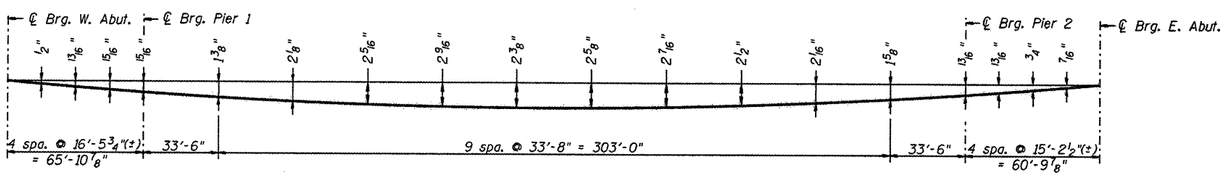

DEAD LOAD DEFLECTION DIAGRAM

(INCLUDES WEIGHT OF CONCRETE ONLY)

Note: The above deflections are not to be used in the field if the engineer is working from the grade elevations adjusted for dead load deflections as shown on the following sheets.

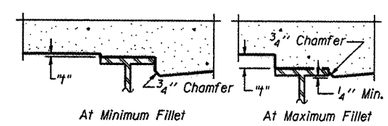

To determine "t": After all structural steel has been erected, elevations of the top flanges of the girders shall be taken at intervals shown on the following sheets. These elevations subtracted from the "Theoretical Grade Elevations Adjusted for Dead Load Deflection" shown this sheet, minus slab thickness, equals the fillet heights "t" above top flange of girders.

FILLET HEIGHTS

L:\ROCKFORD\08226882\Drawings\CADD\Sheets\S_07_Deck Elevation 1.dgn

CMT
CRAWFORD, MURPHY & TILLY, INC.
CONSULTING ENGINEERS
License No. 184-000613

HNTB

DESIGNED	- PA, JDJ, BPD, CJW	REVISED	-
DRAWN	- GLD	REVISED	-
CHECKED	- RJK	REVISED	-
DATE	- 02/04/2011	REVISED	-

CITY OF ROCKFORD
MORGAN STREET BRIDGE

DECK ELEVATIONS - I
STRUCTURE NO. 101-6108

SCALE: | SHEET NO. 6 OF 79 SHEETS | STA. 47+00.74 TO STA. 52+63.50

F.A.U. RTE.	SECTION	COUNTY	TOTAL SHEETS	SHEET NO.
5077	99-00493-00-BR	WINNEBAGO	253	132

CONTRACT NO. 85529

FED. ROAD DIST. NO. 2 | ILLINOIS | FED. AID PROJECT BRM-5099(65)

GIRDER/STRINGER 1

Location	Station	Offset (ft)	Theoretical Grade Elevations	Theoretical Grade Elevations Adjusted for DL Deflection
Bk. W. Abut.	47+30.74	-29.50	722.08	722.08
CL Brg. W. Abut.	47+34.09	-29.50	722.17	722.17
A	47+43.00	-29.50	722.41	722.42
B	47+53.00	-29.50	722.69	722.70
C	47+63.00	-29.50	722.96	722.98
D	47+73.00	-29.50	723.24	723.26
E	47+83.00	-29.50	723.51	723.53
F	47+93.00	-29.50	723.79	723.81
CL Brg. Pier 1	48+00.00	-29.50	723.98	724.00
G	48+08.38	-29.50	724.21	724.24
H	48+16.75	-29.50	724.44	724.48
I	48+25.13	-29.50	724.67	724.73
J	48+33.50	-29.50	724.90	724.97
K	48+41.92	-29.50	725.13	725.22
L	48+50.33	-29.50	725.37	725.46
M	48+58.75	-29.50	725.60	725.70
N	48+67.17	-29.50	725.83	725.93
O	48+75.58	-29.50	726.06	726.18
P	48+84.00	-29.50	726.29	726.42
Q	48+92.42	-29.50	726.52	726.65
R	49+00.83	-29.50	726.75	726.88
S	49+09.25	-29.50	726.99	727.13
T	49+17.67	-29.50	727.22	727.36
U	49+26.08	-29.50	727.45	727.59
V	49+34.50	-29.50	727.68	727.82
W	49+42.92	-29.50	727.91	728.06
X	49+51.33	-29.50	728.14	728.29
Y	49+59.75	-29.50	728.38	728.52
Z	49+68.17	-29.50	728.61	728.75
AA	49+76.58	-29.50	728.84	728.99
BB	49+85.00	-29.50	729.07	729.22
CC	49+93.42	-29.50	729.30	729.45
DD	50+01.83	-29.50	729.53	729.68
EE	50+10.25	-29.50	729.76	729.91
FF	50+18.67	-29.50	730.00	730.15
GG	50+27.08	-29.50	730.23	730.37
HH	50+35.50	-29.50	730.46	730.60
II	50+43.92	-29.50	730.69	730.84
JJ	50+52.33	-29.50	730.92	731.07
KK	50+60.75	-29.50	731.15	731.29
LL	50+69.17	-29.50	731.38	731.52
MM	50+77.58	-29.50	731.62	731.75
NN	50+86.00	-29.50	731.85	731.98
OO	50+94.42	-29.50	732.08	732.20
PP	51+02.83	-29.50	732.31	732.42
QQ	51+11.25	-29.50	732.54	732.65
RR	51+19.67	-29.50	732.77	732.87
SS	51+28.08	-29.50	733.00	733.09
TT	51+36.50	-29.50	733.24	733.30
UU	51+44.88	-29.50	733.47	733.52
VV	51+53.25	-29.50	733.70	733.74
WW	51+61.63	-29.50	733.93	733.96
CL Brg. Pier 2	51+70.00	-29.50	734.16	734.18
XX	51+80.00	-29.50	734.43	734.45
YY	51+90.00	-29.50	734.71	734.72
ZZ	52+00.00	-29.50	734.98	734.99
ZA	52+10.00	-29.50	735.26	735.27
ZB	52+20.00	-29.50	735.53	735.54
CL Brg. E. Abut.	52+27.73	-29.50	735.75	735.75
Bk. E. Abut.	52+30.90	-29.50	735.83	735.83

GIRDER/STRINGER 2

Location	Station	Offset (ft)	Theoretical Grade Elevations	Theoretical Grade Elevations Adjusted for DL Deflection
Bk. W. Abut.	47+30.74	-21.25	722.25	722.25
CL Brg. W. Abut.	47+34.09	-21.25	722.34	722.34
A	47+43.00	-21.25	722.59	722.60
B	47+53.00	-21.25	722.86	722.89
C	47+63.00	-21.25	723.14	723.17
D	47+73.00	-21.25	723.41	723.45
E	47+83.00	-21.25	723.69	723.73
F	47+93.00	-21.25	723.96	724.00
CL Brg. Pier 1	48+00.00	-21.25	724.15	724.20
G	48+08.38	-21.25	724.38	724.43
H	48+16.75	-21.25	724.61	724.68
I	48+25.13	-21.25	724.84	724.92
J	48+33.50	-21.25	725.07	725.16
K	48+41.92	-21.25	725.31	725.41
L	48+50.33	-21.25	725.54	725.66
M	48+58.75	-21.25	725.77	725.90
N	48+67.17	-21.25	726.00	726.14
O	48+75.58	-21.25	726.23	726.38
P	48+84.00	-21.25	726.46	726.62
Q	48+92.42	-21.25	726.70	726.85
R	49+00.83	-21.25	726.93	727.08
S	49+09.25	-21.25	727.16	727.33
T	49+17.67	-21.25	727.39	727.56
U	49+26.08	-21.25	727.62	727.79
V	49+34.50	-21.25	727.85	728.02
W	49+42.92	-21.25	728.08	728.26
X	49+51.33	-21.25	728.32	728.49
Y	49+59.75	-21.25	728.55	728.72
Z	49+68.17	-21.25	728.78	728.94
AA	49+76.58	-21.25	729.01	729.18
BB	49+85.00	-21.25	729.24	729.42
CC	49+93.42	-21.25	729.47	729.65
DD	50+01.83	-21.25	729.70	729.88
EE	50+10.25	-21.25	729.94	730.11
FF	50+18.67	-21.25	730.17	730.35
GG	50+27.08	-21.25	730.40	730.57
HH	50+35.50	-21.25	730.63	730.80
II	50+43.92	-21.25	730.86	731.04
JJ	50+52.33	-21.25	731.09	731.27
KK	50+60.75	-21.25	731.32	731.50
LL	50+69.17	-21.25	731.56	731.72
MM	50+77.58	-21.25	731.79	731.95
NN	50+86.00	-21.25	732.02	732.18
OO	50+94.42	-21.25	732.25	732.40
PP	51+02.83	-21.25	732.48	732.62
QQ	51+11.25	-21.25	732.71	732.85
RR	51+19.67	-21.25	732.95	733.07
SS	51+28.08	-21.25	733.18	733.29
TT	51+36.50	-21.25	733.41	733.50
UU	51+44.88	-21.25	733.64	733.72
VV	51+53.25	-21.25	733.87	733.94
WW	51+61.63	-21.25	734.10	734.15
CL Brg. Pier 2	51+70.00	-21.25	734.33	734.37
XX	51+80.00	-21.25	734.60	734.64
YY	51+90.00	-21.25	734.88	734.91
ZZ	52+00.00	-21.25	735.15	735.19
ZA	52+10.00	-21.25	735.43	735.45
ZB	52+20.00	-21.25	735.70	735.72
CL Brg. E. Abut.	52+28.60	-21.25	735.94	735.94
Bk. E. Abut.	52+31.77	-21.25	736.03	736.03

GIRDER/STRINGER 3

Location	Station	Offset (ft)	Theoretical Grade Elevations	Theoretical Grade Elevations Adjusted for DL Deflection
Bk. W. Abut.	47+30.74	-13.00	722.42	722.42
CL Brg. W. Abut.	47+34.09	-13.00	722.51	722.51
A	47+43.00	-13.00	722.76	722.78
B	47+53.00	-13.00	723.03	723.07
C	47+63.00	-13.00	723.31	723.36
D	47+73.00	-13.00	723.58	723.64
E	47+83.00	-13.00	723.86	723.92
F	47+93.00	-13.00	724.13	724.19
CL Brg. Pier 1	48+00.00	-13.00	724.33	724.39
G	48+08.38	-13.00	724.56	724.62
H	48+16.75	-13.00	724.79	724.87
I	48+25.13	-13.00	725.02	725.11
J	48+33.50	-13.00	725.25	725.35
K	48+41.92	-13.00	725.48	725.60
L	48+50.33	-13.00	725.71	725.85
M	48+58.75	-13.00	725.94	726.09
N	48+67.17	-13.00	726.17	726.33
O	48+75.58	-13.00	726.40	726.57
P	48+84.00	-13.00	726.64	726.82
Q	48+92.42	-13.00	726.87	727.05
R	49+00.83	-13.00	727.10	727.28
S	49+09.25	-13.00	727.33	727.52
T	49+17.67	-13.00	727.56	727.76
U	49+26.08	-13.00	727.79	727.99
V	49+34.50	-13.00	728.02	728.22
W	49+42.92	-13.00	728.26	728.45
X	49+51.33	-13.00	728.49	728.69
Y	49+59.75	-13.00	728.72	728.91
Z	49+68.17	-13.00	728.95	729.13
AA	49+76.58	-13.00	729.18	729.38
BB	49+85.00	-13.00	729.41	729.61
CC	49+93.42	-13.00	729.64	729.84
DD	50+01.83	-13.00	729.88	730.07
EE	50+10.25	-13.00	730.11	730.31
FF	50+18.67	-13.00	730.34	730.54
GG	50+27.08	-13.00	730.57	730.77
HH	50+35.50	-13.00	730.80	730.99
II	50+43.92	-13.00	731.03	731.23
JJ	50+52.33	-13.00	731.27	731.46
KK	50+60.75	-13.00	731.50	731.69
LL	50+69.17	-13.00	731.73	731.92
MM	50+77.58	-13.00	731.96	732.15
NN	50+86.00	-13.00	732.19	732.37
OO	50+94.42	-13.00	732.42	732.59
PP	51+02.83	-13.00	732.65	732.81
QQ	51+11.25	-13.00	732.89	733.04
RR	51+19.67	-13.00	733.12	733.26
SS	51+28.08	-13.00	733.35	733.48
TT	51+36.50	-13.00	733.58	733.70
UU	51+44.88	-13.00	733.81	733.91
VV	51+53.25	-13.00	734.04	734.13
WW	51+61.63	-13.00	734.27	734.34
CL Brg. Pier 2	51+70.00	-13.00	734.50	734.55
XX	51+80.00	-13.00	734.78	734.83
YY	51+90.00	-13.00	735.05	735.10
ZZ	52+00.00	-13.00	735.33	735.37
ZA	52+10.00	-13.00	735.60	735.64
ZB	52+20.00	-13.00	735.88	735.89
CL Brg. E. Abut.	52+29.46	-13.00	736.14	736.14
Bk. E. Abut.	52+32.64	-13.00	736.22	736.22

GIRDER/STRINGER 4

Location	Station	Offset (ft)	Theoretical Grade Elevations	Theoretical Grade Elevations Adjusted for DL Deflection
Bk. W. Abut.	47+30.74	-4.75	722.55	722.55
CL Brg. W. Abut.	47+34.09	-4.75	722.65	722.65
A	47+43.00	-4.75	722.89	722.91
B	47+53.00	-4.75	723.17	723.21
C	47+63.00	-4.75	723.44	723.50
D	47+73.00	-4.75	723.72	723.78
E	47+83.00	-4.75	723.99	724.06
F	47+93.00	-4.75	724.27	724.34
CL Brg. Pier 1	48+00.00	-4.75	724.46	724.53
G	48+08.38	-4.75	724.69	724.77
H	48+16.75	-4.75	724.92	725.01
I	48+25.13	-4.75	725.15	725.25
J	48+33.50	-4.75	725.38	725.49
K	48+41.92	-4.75	725.61	725.75
L	48+50.33	-4.75	725.84	726.00
M	48+58.75	-4.75	726.08	726.24
N	48+67.17	-4.75	726.31	726.48
O	48+75.58	-4.75	726.54	726.72
P	48+84.00	-4.75	726.77	726.96
Q	48+92.42	-4.75	727.00	727.20
R	49+00.83	-4.75	727.23	727.42
S	49+09.25	-4.75	727.46	727.67
T	49+17.67	-4.75	727.70	727.91
U	49+26.08	-4.75	727.93	728.14
V	49+34.50	-4.75	728.16	728.37
W	49+42.92	-4.75	728.39	728.60
X	49+51.33	-4.75	728.62	728.84
Y	49+59.75	-4.75	728.85	729.06
Z	49+68.17	-4.75	729.08	729.28
AA	49+76.58	-4.75	729.32	729.52
BB	49+85.00	-4.75	729.55	729.76
CC	49+93.42	-4.75	729.78	729.99
DD	50+01.83	-4.75	730.01	730.22
EE	50+10.25	-4.75	730.24	730.46
FF	50+18.67	-4.75	730.47	730.69
GG	50+27.08	-4.75	730.70	730.91
HH	50+35.50	-4.75	730.94	731.13
II	50+43.92	-4.75	731.17	731.38
JJ	50+52.33	-4.75	731.40	731.61
KK	50+60.75	-4.75	731.63	731.84
LL	50+69.17	-4.75	731.86	732.07
MM	50+77.58	-4.75	732.09	732.30
NN	50+86.00	-4.75	732.33	732.52
OO	50+94.42	-4.75	732.56	732.74
PP	51+02.83	-4.75	732.79	732.96
QQ	51+11.25	-4.75	733.02	733.19
RR	51+19.67	-4.75	733.25	733.41
SS	51+28.08	-4.75	733.48	733.63
TT	51+36.50	-4.75	733.71	733.84
UU	51+44.88	-4.75	733.94	734.06
VV	51+53.25	-4.75	734.17	734.28
WW	51+61.63	-4.75	734.41	734.49
CL Brg. Pier 2	51+70.00	-4.75	734.64	734.70
XX	51+80.00	-4.75	734.91	734.98
YY	51+90.00	-4.75	735.19	735.25
ZZ	52+00.00	-4.75	735.46	735.52
ZA	52+10.00	-4.75	735.74	735.78
ZB	52+20.00	-4.75	736.01	736.03
CL Brg. E. Abut.	52+30.33	-4.75	736.29	736.29
Bk. E. Abut.	52+33.50	-4.75	736.38	736.38

PGL

Location	Station	Offset (ft)	Theoretical Grade Elevations	Theoretical Grade Elevations Adjusted for DL Deflection
Bk. W. Abut.	47+30.74	0.00	722.63	722.63
CL Brg. W. Abut.	47+34.09	0.00	722.72	722.72
A	47+43.00	0.00	722.97	722.99
B	47+53.00	0.00	723.24	723.28
C	47+63.00	0.00	723.52	723.58
D	47+73.00	0.00	723.79	723.86
E	47+83.00	0.00	724.07	724.14
F	47+93.00	0.00	724.34	724.42
CL Brg. Pier 1	48+00.00	0.00	724.53	724.61
G	48+08.38	0.00	724.76	724.85
H	48+16.75	0.00	724.99	725.09
I	48+25.13	0.00	725.22	725.33
J	48+33.50	0.00	725.45	725.57
K	48+41.92	0.00	725.69	725.83
L	48+50.33	0.00	725.92	726.08
M	48+58.75	0.00	726.15	726.32
N	48+67.17	0.00	726.38	726.56
O	48+75.58	0.00	726.61	726.80
P	48+84.00	0.00	726.84	727.04
Q	48+92.42	0.00	727.08	727.27
R	49+00.83	0.00	727.31	727.50
S	49+09.25	0.00	727.54	727.74
T	49+17.67	0.00	727.77	727.98
U	49+26.08	0.00	728.00	728.21
V	49+34.50	0.00	728.23	728.45
W	49+42.92	0.00	728.46	728.68
X	49+51.33	0.00	728.70	728.91
Y	49+59.75	0.00	728.93	729.14
Z	49+68.17	0.00	729.16	729.36
AA	49+76.58	0.00	729.39	729.60
BB	49+85.00	0.00	729.62	729.84
CC	49+93.42	0.00	729.85	730.07
DD	50+01.83	0.00	730.08	730.30
EE	50+10.25	0.00	730.32	730.53
FF	50+18.67	0.00	730.55	730.77
GG	50+27.08	0.00	730.78	730.99
HH	50+35.50	0.00	731.01	731.21
II	50+43.92	0.00	731.24	731.45
JJ	50+52.33	0.00	731.47	731.69
KK	50+60.75	0.00	731.70	731.92
LL	50+69.17	0.00	731.94	732.14
MM	50+77.58	0.00	732.17	732.37
NN	50+86.00	0.00	732.40	732.60
OO	50+94.42	0.00	732.63	732.82
PP	51+02.83	0.00	732.86	733.03
QQ	51+11.25	0.00	733.09	733.26
RR	51+19.67	0.00	733.33	733.49
SS	51+28.08	0.00	733.56	733.71
TT	51+36.50	0.00	733.79	733.92
UU	51+44.88	0.00	734.02	734.14
VV	51+53.25	0.00	734.25	734.35
WW	51+61.63	0.00	734.48	734.56
CL Brg. Pier 2	51+70.00	0.00	734.71	734.78
XX	51+80.00	0.00	734.98	735.05
YY	51+90.00	0.00	735.26	735.33
ZZ	52+00.00	0.00	735.53	735.59
ZA	52+10.00	0.00	735.81	735.85
ZB	52+20.00	0.00	736.08	736.11
CL Brg. E. Abut.	52+30.83	0.00	736.38	736.38
Bk. E. Abut.	52+34.00	0.00	736.47	736.47

L:\ROCKFORD\B26982\Dgn\CADD_Sheets\S_B8_Deck Elevation 2.dgn

CMT
CRAWFORD, MURPHY & TILLY, INC.
CONSULTING ENGINEERS
License No. 184-000613

HNTB

DESIGNED - PA, JDJ, BPD, CJW	REVISED -		
DRAWN - GLD	REVISED -		
CHECKED - RJK	REVISED -		
DATE - 02/04/2011	REVISED -		

CITY OF ROCKFORD
MORGAN STREET BRIDGE

DECK ELEVATIONS – II
STRUCTURE NO. 101-6108

SCALE: | SHEET NO. 7 OF 79 SHEETS | STA. 47+00.74 TO STA. 52+63.50

F.A.U. RTE.	SECTION	COUNTY	TOTAL SHEETS	SHEET NO.
5077	99-00493-00-BR	WINNEBAGO	253	133
		CONTRACT NO. 85529		
FED. ROAD DIST. NO. 2	ILLINOIS	FED. AID PROJECT BRM-5099(165)		

GIRDER/STRINGER 5

Location	Station	Offset (ft)	Theoretical Grade Elevations	Theoretical Grade Elevations Adjusted for DL Deflection
Bk. W. Abut.	47+30.74	3.50	722.57	722.57
CL Brg. W. Abut.	47+34.09	3.50	722.67	722.67
A	47+43.00	3.50	722.91	722.93
B	47+53.00	3.50	723.19	723.23
C	47+63.00	3.50	723.46	723.52
D	47+73.00	3.50	723.74	723.81
E	47+83.00	3.50	724.01	724.09
F	47+93.00	3.50	724.29	724.36
CL Brg. Pier 1	48+00.00	3.50	724.48	724.56
G	48+08.38	3.50	724.71	724.79
H	48+16.75	3.50	724.94	725.04
I	48+25.13	3.50	725.17	725.28
J	48+33.50	3.50	725.40	725.52
K	48+41.92	3.50	725.63	725.77
L	48+50.33	3.50	725.86	726.02
M	48+58.75	3.50	726.09	726.26
N	48+67.17	3.50	726.33	726.51
O	48+75.58	3.50	726.56	726.75
P	48+84.00	3.50	726.79	726.99
Q	48+92.42	3.50	727.02	727.22
R	49+00.83	3.50	727.25	727.45
S	49+09.25	3.50	727.48	727.69
T	49+17.67	3.50	727.71	727.93
U	49+26.08	3.50	727.95	728.16
V	49+34.50	3.50	728.18	728.39
W	49+42.92	3.50	728.41	728.63
X	49+51.33	3.50	728.64	728.86
Y	49+59.75	3.50	728.87	729.09
Z	49+68.17	3.50	729.10	729.30
AA	49+76.58	3.50	729.34	729.55
BB	49+85.00	3.50	729.57	729.79
CC	49+93.42	3.50	729.80	730.02
DD	50+01.83	3.50	730.03	730.25
EE	50+10.25	3.50	730.26	730.48
FF	50+18.67	3.50	730.49	730.71
GG	50+27.08	3.50	730.72	730.94
HH	50+35.50	3.50	730.96	731.16
II	50+43.92	3.50	731.19	731.40
JJ	50+52.33	3.50	731.42	731.64
KK	50+60.75	3.50	731.65	731.87
LL	50+69.17	3.50	731.88	732.09
MM	50+77.58	3.50	732.11	732.32
NN	50+86.00	3.50	732.34	732.55
OO	50+94.42	3.50	732.58	732.77
PP	51+02.83	3.50	732.81	732.98
QQ	51+11.25	3.50	733.04	733.21
RR	51+19.67	3.50	733.27	733.44
SS	51+28.08	3.50	733.50	733.66
TT	51+36.50	3.50	733.73	733.87
UU	51+44.88	3.50	733.96	734.08
VV	51+53.25	3.50	734.19	734.30
WW	51+61.63	3.50	734.42	734.51
CL Brg. Pier 2	51+70.00	3.50	734.65	734.72
XX	51+80.00	3.50	734.93	735.00
YY	51+90.00	3.50	735.20	735.27
ZZ	52+00.00	3.50	735.48	735.54
ZA	52+10.00	3.50	735.76	735.80
ZB	52+20.00	3.50	736.03	736.06
CL Brg. E. Abut.	52+31.20	3.50	736.34	736.34
Bk. E. Abut.	52+34.37	3.50	736.43	736.43

GIRDER/STRINGER 6

Location	Station	Offset (ft)	Theoretical Grade Elevations	Theoretical Grade Elevations Adjusted for DL Deflection
Bk. W. Abut.	47+30.74	11.75	722.45	722.45
CL Brg. W. Abut.	47+34.09	11.75	722.54	722.54
A	47+43.00	11.75	722.78	722.80
B	47+53.00	11.75	723.06	723.10
C	47+63.00	11.75	723.33	723.39
D	47+73.00	11.75	723.61	723.67
E	47+83.00	11.75	723.88	723.95
F	47+93.00	11.75	724.16	724.23
CL Brg. Pier 1	48+00.00	11.75	724.35	724.42
G	48+08.38	11.75	724.58	724.66
H	48+16.75	11.75	724.81	724.90
I	48+25.13	11.75	725.04	725.14
J	48+33.50	11.75	725.27	725.38
K	48+41.92	11.75	725.50	725.64
L	48+50.33	11.75	725.73	725.89
M	48+58.75	11.75	725.97	726.13
N	48+67.17	11.75	726.20	726.37
O	48+75.58	11.75	726.43	726.61
P	48+84.00	11.75	726.66	726.85
Q	48+92.42	11.75	726.89	727.09
R	49+00.83	11.75	727.12	727.31
S	49+09.25	11.75	727.35	727.56
T	49+17.67	11.75	727.59	727.80
U	49+26.08	11.75	727.82	728.03
V	49+34.50	11.75	728.05	728.26
W	49+42.92	11.75	728.28	728.49
X	49+51.33	11.75	728.51	728.73
Y	49+59.75	11.75	728.74	728.95
Z	49+68.17	11.75	728.97	729.17
AA	49+76.58	11.75	729.21	729.41
BB	49+85.00	11.75	729.44	729.65
CC	49+93.42	11.75	729.67	729.88
DD	50+01.83	11.75	729.90	730.11
EE	50+10.25	11.75	730.13	730.35
FF	50+18.67	11.75	730.36	730.58
GG	50+27.08	11.75	730.60	730.80
HH	50+35.50	11.75	730.83	731.02
II	50+43.92	11.75	731.06	731.27
JJ	50+52.33	11.75	731.29	731.50
KK	50+60.75	11.75	731.52	731.73
LL	50+69.17	11.75	731.75	731.96
MM	50+77.58	11.75	731.98	732.19
NN	50+86.00	11.75	732.22	732.41
OO	50+94.42	11.75	732.45	732.63
PP	51+02.83	11.75	732.68	732.85
QQ	51+11.25	11.75	732.91	733.08
RR	51+19.67	11.75	733.14	733.30
SS	51+28.08	11.75	733.37	733.52
TT	51+36.50	11.75	733.60	733.74
UU	51+44.88	11.75	733.83	733.95
VV	51+53.25	11.75	734.07	734.17
WW	51+61.63	11.75	734.30	734.38
CL Brg. Pier 2	51+70.00	11.75	734.53	734.59
XX	51+80.00	11.75	734.80	734.87
YY	51+90.00	11.75	735.08	735.14
ZZ	52+00.00	11.75	735.35	735.41
ZA	52+10.00	11.75	735.63	735.67
ZB	52+20.00	11.75	735.90	735.93
CL Brg. E. Abut.	52+32.06	11.75	736.23	736.23
Bk. E. Abut.	52+35.24	11.75	736.32	736.32

GIRDER/STRINGER 7

Location	Station	Offset (ft)	Theoretical Grade Elevations	Theoretical Grade Elevations Adjusted for DL Deflection
Bk. W. Abut.	47+30.74	20.00	722.27	722.27
CL Brg. W. Abut.	47+34.09	20.00	722.37	722.37
A	47+43.00	20.00	722.61	722.63
B	47+53.00	20.00	722.89	722.92
C	47+63.00	20.00	723.16	723.21
D	47+73.00	20.00	723.44	723.49
E	47+83.00	20.00	723.71	723.77
F	47+93.00	20.00	723.99	724.05
CL Brg. Pier 1	48+00.00	20.00	724.18	724.24
G	48+08.38	20.00	724.41	724.48
H	48+16.75	20.00	724.64	724.72
I	48+25.13	20.00	724.87	724.96
J	48+33.50	20.00	725.10	725.20
K	48+41.92	20.00	725.33	725.46
L	48+50.33	20.00	725.56	725.71
M	48+58.75	20.00	725.80	725.95
N	48+67.17	20.00	726.03	726.19
O	48+75.58	20.00	726.26	726.43
P	48+84.00	20.00	726.49	726.67
Q	48+92.42	20.00	726.72	726.90
R	49+00.83	20.00	726.95	727.13
S	49+09.25	20.00	727.18	727.37
T	49+17.67	20.00	727.42	727.61
U	49+26.08	20.00	727.65	727.84
V	49+34.50	20.00	727.88	728.07
W	49+42.92	20.00	728.11	728.31
X	49+51.33	20.00	728.34	728.54
Y	49+59.75	20.00	728.57	728.77
Z	49+68.17	20.00	728.80	728.99
AA	49+76.58	20.00	729.04	729.23
BB	49+85.00	20.00	729.27	729.47
CC	49+93.42	20.00	729.50	729.70
DD	50+01.83	20.00	729.73	729.93
EE	50+10.25	20.00	729.96	730.16
FF	50+18.67	20.00	730.19	730.39
GG	50+27.08	20.00	730.42	730.62
HH	50+35.50	20.00	730.66	730.84
II	50+43.92	20.00	730.89	731.08
JJ	50+52.33	20.00	731.12	731.32
KK	50+60.75	20.00	731.35	731.55
LL	50+69.17	20.00	731.58	731.77
MM	50+77.58	20.00	731.81	732.00
NN	50+86.00	20.00	732.05	732.23
OO	50+94.42	20.00	732.28	732.45
PP	51+02.83	20.00	732.51	732.66
QQ	51+11.25	20.00	732.74	732.89
RR	51+19.67	20.00	732.97	733.12
SS	51+28.08	20.00	733.20	733.34
TT	51+36.50	20.00	733.43	733.55
UU	51+44.88	20.00	733.66	733.77
VV	51+53.25	20.00	733.89	733.98
WW	51+61.63	20.00	734.13	734.20
CL Brg. Pier 2	51+70.00	20.00	734.36	734.41
XX	51+80.00	20.00	734.63	734.69
YY	51+90.00	20.00	734.91	734.96
ZZ	52+00.00	20.00	735.18	735.23
ZA	52+10.00	20.00	735.46	735.50
ZB	52+20.00	20.00	735.73	735.76
CL Brg. E. Abut.	52+32.93	20.00	736.09	736.09
Bk. E. Abut.	52+36.11	20.00	736.17	736.17

GIRDER/STRINGER 8

Location	Station	Offset (ft)	Theoretical Grade Elevations	Theoretical Grade Elevations Adjusted for DL Deflection
Bk. W. Abut.	47+30.74	28.25	722.10	722.10
CL Brg. W. Abut.	47+34.09	28.25	722.19	722.19
A	47+43.00	28.25	722.44	722.45
B	47+53.00	28.25	722.71	722.74
C	47+63.00	28.25	722.99	723.03
D	47+73.00	28.25	723.26	723.30
E	47+83.00	28.25	723.54	723.58
F	47+93.00	28.25	723.81	723.86
CL Brg. Pier 1	48+00.00	28.25	724.01	724.05
G	48+08.38	28.25	724.24	724.29
H	48+16.75	28.25	724.47	724.53
I	48+25.13	28.25	724.70	724.77
J	48+33.50	28.25	724.93	725.01
K	48+41.92	28.25	725.16	725.27
L	48+50.33	28.25	725.39	725.51
M	48+58.75	28.25	725.62	725.75
N	48+67.17	28.25	725.85	725.99
O	48+75.58	28.25	726.09	726.23
P	48+84.00	28.25	726.32	726.47
Q	48+92.42	28.25	726.55	726.71
R	49+00.83	28.25	726.78	726.94
S	49+09.25	28.25	727.01	727.18
T	49+17.67	28.25	727.24	727.42
U	49+26.08	28.25	727.48	727.65
V	49+34.50	28.25	727.71	727.88
W	49+42.92	28.25	727.94	728.11
X	49+51.33	28.25	728.17	728.35
Y	49+59.75	28.25	728.40	728.58
Z	49+68.17	28.25	728.63	728.80
AA	49+76.58	28.25	728.86	729.04
BB	49+85.00	28.25	729.10	729.27
CC	49+93.42	28.25	729.33	729.50
DD	50+01.83	28.25	729.56	729.73
EE	50+10.25	28.25	729.79	729.97
FF	50+18.67	28.25	730.02	730.20
GG	50+27.08	28.25	730.25	730.43
HH	50+35.50	28.25	730.48	730.65
II	50+43.92	28.25	730.72	730.89
JJ	50+52.33	28.25	730.95	731.12
KK	50+60.75	28.25	731.18	731.35
LL	50+69.17	28.25	731.41	731.58
MM	50+77.58	28.25	731.64	731.81
NN	50+86.00	28.25	731.87	732.03
OO	50+94.42	28.25	732.10	732.25
PP	51+02.83	28.25	732.34	732.47
QQ	51+11.25	28.25	732.57	732.70
RR	51+19.67	28.25	732.80	732.92
SS	51+28.08	28.25	733.03	733.14
TT	51+36.50	28.25	733.26	733.36
UU	51+44.88	28.25	733.49	733.58
VV	51+53.25	28.25	733.72	733.79
WW	51+61.63	28.25	733.95	734.01
CL Brg. Pier 2	51+70.00	28.25	734.18	734.22
XX	51+80.00	28.25	734.46	734.50
YY	51+90.00	28.25	734.73	734.77
ZZ	52+00.00	28.25	735.01	735.05
ZA	52+10.00	28.25	735.28	735.31
ZB	52+20.00	28.25	735.56	735.58
CL Brg. E. Abut.	52+33.80	28.25	735.94	735.94
Bk. E. Abut.	52+36.97	28.25	736.03	736.03

GIRDER/STRINGER 9

Location	Station	Offset (ft)	Theoretical Grade Elevations	Theoretical Grade Elevations Adjusted for DL Deflection
Bk. W. Abut.	47+30.74	36.50	721.93	721.93
CL Brg. W. Abut.	47+34.09	36.50	722.02	722.02
A	47+43.00	36.50	722.27	722.28
B	47+53.00	36.50	722.54	722.56
C	47+63.00	36.50	722.82	722.83
D	47+73.00	36.50	723.09	723.11
E	47+83.00	36.50	723.37	723.38
F	47+93.00	36.50	723.64	723.66
CL Brg. Pier 1	48+00.00	36.50	723.84	723.86
G	48+08.38	36.50	724.07	724.10
H	48+16.75	36.50	724.30	724.34
I	48+25.13	36.50	724.53	724.58
J	48+33.50	36.50	724.76	724.82
K	48+41.92	36.50	724.99	725.07
L	48+50.33	36.50	725.22	725.31
M	48+58.75	36.50	725.45	725.55
N	48+67.17	36.50	725.68	725.79
O	48+75.58	36.50	725.91	726.03
P	48+84.00	36.50	726.15	726.27
Q	48+92.42	36.50	726.38	726.51
R	49+00.83	36.50	726.61	726.74
S	49+09.25	36.50	726.84	726.98
T	49+17.67	36.50	727.07	727.22
U	49+26.08	36.50	727.30	727.45
V	49+34.50	36.50	727.53	727.68
W	49+42.92	36.50	727.77	727.91
X	49+51.33	36.50	728.00	728.15
Y	49+59.75	36.50	728.23	728.38
Z	49+68.17	36.50	728.46	728.60
AA	49+76.58	36.50	728.69	728.84
BB	49+85.00	36.50	728.92	729.07
CC	49+93.42	36.50	729.16	729.30
DD	50+01.83	36.50	729.39	729.53
EE	50+10.25	36.50	729.62	729.77
FF	50+18.67	36.50	729.85	730.00
GG	50+27.08	36.50	730.08	730.23
HH	50+35.50	36.50	730.31	730.45
II	50+43.92	36.50	730.54	730.69
JJ	50+52.33	36.50	730.78	730.92
KK	50+60.75	36.50	731.01	731.15
LL	50+69.17	36.50	731.24	731.37
MM	50+77.58	36.50	731.47	731.60
NN	50+86.00	36.50	731.70	731.83
OO	50+94.42	36.50	731.93	732.05
PP	51+02.83	36.50	732.16	732.27
QQ	51+11.25	36.50	732.40	732.50
RR	51+19.67	36.50	732.63	732.72
SS	51+28.08	36.50	732.86	732.94
TT	51+36.50	36.50	733.09	733.16
UU	51+44.88	36.50	733.32	733.38
VV	51+53.25	36.50	733.55	733.60
WW	51+61.63	36.50	733.78	733.81
CL Brg. Pier 2	51+70.00	36.50	734.01	734.03
XX	51+80.00	36.50	734.29	734.30
YY	51+90.00	36.50	734.56	734.58
ZZ	52+00.00	36.50	734.84	734.85
ZA	52+10.00	36.50	735.11	735.13
ZB	52+20.00	36.50	735.39	735.40
CL Brg. E. Abut.	52+34.67	36.50	735.79	735.79
Bk. E. Abut.	52+37.84	36.50	735.88	735.88

L:\ROCKFORD\08258082\Drawing\CADD_Sheets\S_09_Deck Elevation 3.dgn

CMT
CRAWFORD, MURPHY & TILLY, INC.
CONSULTING ENGINEERS
License No. 184-000613

HNTB

DESIGNED - PA, JDJ, BPD, CJW	REVISED -		
DRAWN - GLD	REVISED -		
CHECKED - RJK	REVISED -		
DATE - 02/04/2011	REVISED -		

CITY OF ROCKFORD
MORGAN STREET BRIDGE

DECK ELEVATIONS – III
STRUCTURE NO. 101-6108

SCALE: | SHEET NO. 8 OF 79 SHEETS | STA. 47+00.74 TO STA. 52+63.50

F.A.U. RTE.	SECTION	COUNTY	TOTAL SHEETS	SHEET NO.
5077	99-00493-00-BR	WINNEBAGO	253	134

CONTRACT NO. 85529

FED. ROAD DIST. NO. 2 | ILLINOIS | FED. AID PROJECT BRM-5099(65)

NORTH EDGE OF SLAB

Location	Station	Offset	Theoretical Grade Elevations
W. End of W. Appr.	47+01.24	-33.08	721.19
A1	47+11.24	-33.08	721.47
A2	47+21.24	-33.08	721.74
E. End of W. Appr.	47+31.24	-33.08	722.02

SOUTH EDGE OF NORTH LANE

Location	Station	Offset	Theoretical Grade Elevations
W. End of W. Appr.	47+01.24	-12.00	721.63
A1	47+11.24	-12.00	721.90
A2	47+21.24	-12.00	722.18
E. End of W. Appr.	47+31.24	-12.00	722.45

℄ MORGAN ST. & PGL

Location	Station	Offset	Theoretical Grade Elevations
W. End of W. Appr.	47+01.24	0.00	721.82
A1	47+11.24	0.00	722.09
A2	47+21.24	0.00	722.37
E. End of W. Appr.	47+31.24	0.00	722.64

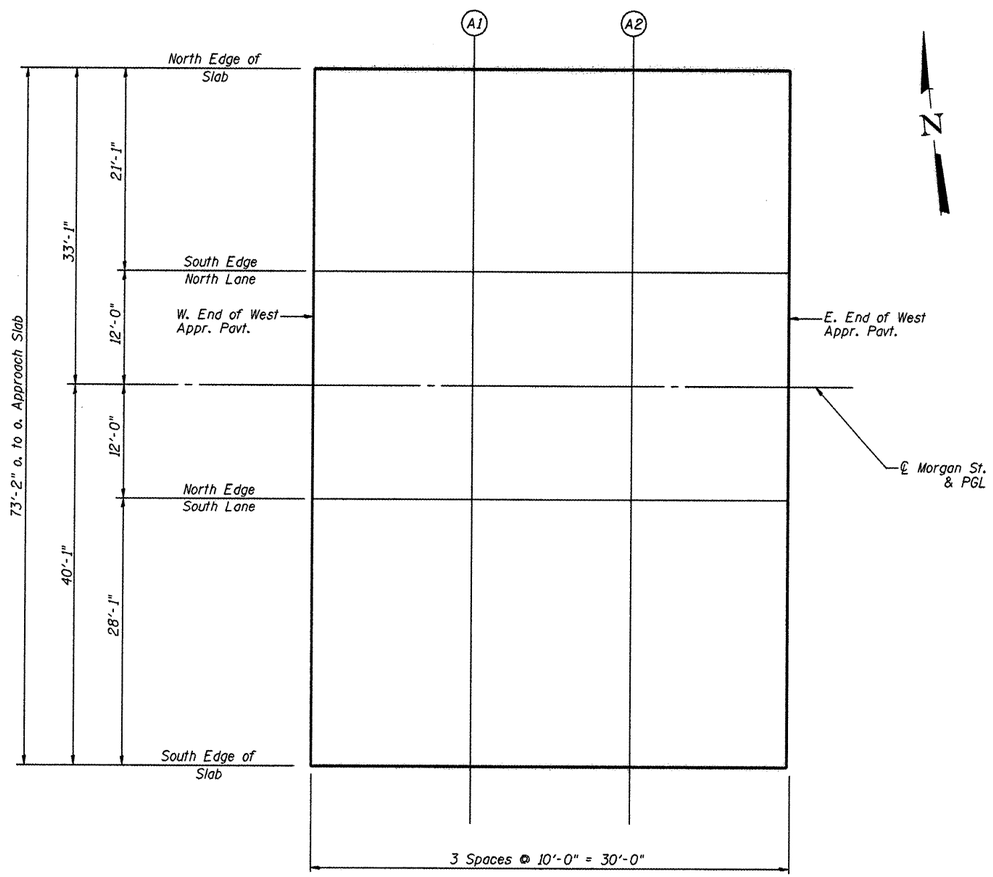

PLAN - WEST APPROACH

NORTH EDGE OF SOUTH LANE

Location	Station	Offset	Theoretical Grade Elevations
W. End of W. Appr.	47+01.24	12.00	721.63
A1	47+11.24	12.00	721.90
A2	47+21.24	12.00	722.18
E. End of W. Appr.	47+31.24	12.00	722.45

SOUTH EDGE OF SLAB

Location	Station	Offset	Theoretical Grade Elevations
W. End of W. Appr.	47+01.24	40.08	721.04
A1	47+11.24	40.08	721.32
A2	47+21.24	40.08	721.59
E. End of W. Appr.	47+31.24	40.08	721.87

L:\ROCKFORD\0826882\D-ew\CADD.Sheets\S.18.1_APP SLAB ELEV.dgn

HNTB

DESIGNED - PA, JDJ, BPD, CJW	REVISED -		
DRAWN - GLD	REVISED -		
CHECKED - RJK	REVISED -		
DATE - 02/04/2011	REVISED -		

CITY OF ROCKFORD
MORGAN STREET BRIDGE

WEST BRIDGE APPROACH SLAB ELEVATIONS
STRUCTURE NO. 101-6108

SCALE: | SHEET NO. 9 OF 79 SHEETS | STA. 47+00.74 TO STA. 52+63.50

F.A.U. RTE.	SECTION	COUNTY	TOTAL SHEETS	SHEET NO.
5077	99-00493-00-BR	WINNEBAGO	253	135

CONTRACT NO. 85529

FED. ROAD DIST. NO. 2 | ILLINOIS | FED. AID PROJECT BRM-5099(65)

NORTH EDGE OF SLAB

Location	Station	Offset	Theoretical Grade Elevations
W. End of E. Appr.	52+30.02	-33.08	735.73
B1	52+40.02	-33.08	736.00
B2	52+50.02	-33.08	736.28
E. End of E. Appr.	52+60.02	-33.08	736.55

SOUTH EDGE OF NORTH LANE

Location	Station	Offset	Theoretical Grade Elevations
W. End of E. Appr.	52+32.24	-12.00	736.23
B1	52+42.24	-12.00	736.51
B2	52+52.24	-12.00	736.78
E. End of E. Appr.	52+62.24	-12.00	737.06

℄ MORGAN ST. & PGL

Location	Station	Offset	Theoretical Grade Elevations
W. End of E. Appr.	52+33.50	0.00	736.46
B1	52+43.50	0.00	736.73
B2	52+53.50	0.00	737.01
E. End of E. Appr.	52+63.50	0.00	737.28

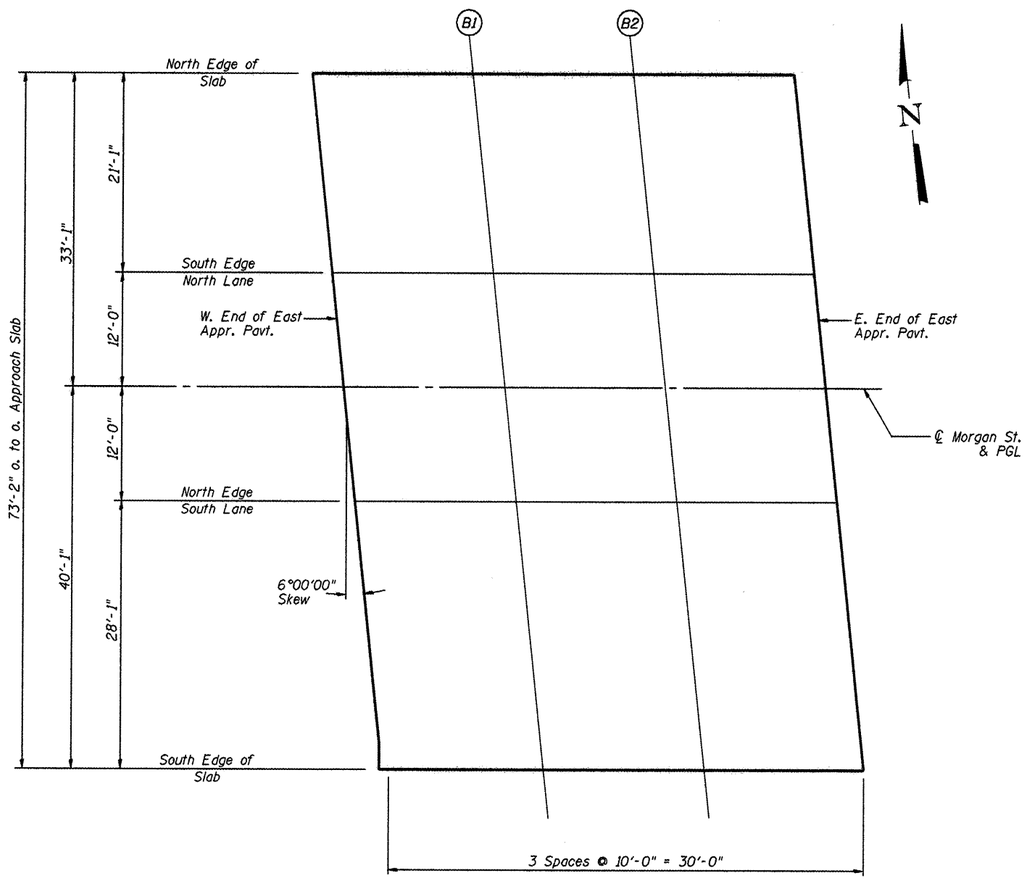

PLAN - EAST APPROACH

NORTH EDGE OF SOUTH LANE

Location	Station	Offset	Theoretical Grade Elevations
W. End of E. Appr.	52+34.76	12.00	736.30
B1	52+44.76	12.00	736.58
B2	52+54.76	12.00	736.85
E. End of E. Appr.	52+64.76	12.00	737.13

SOUTH EDGE OF SLAB

Location	Station	Offset	Theoretical Grade Elevations
W. End of E. Appr.	52+37.71	40.08	735.80
B1	52+47.71	40.08	736.07
B2	52+57.71	40.08	736.35
E. End of E. Appr.	52+67.71	40.08	736.62

L:\ROCKFORD\0826882\Dgns\CADD.Sheets\S.II.E.APP SLAB ELEV.dgn

HNTB

DESIGNED - PA, JDJ, BPD, CJW	REVISED -		
DRAWN - GLD	REVISED -		
CHECKED - RJK	REVISED -		
DATE - 02/04/2011	REVISED -		

CITY OF ROCKFORD
MORGAN STREET BRIDGE

EAST BRIDGE APPROACH SLAB ELEVATIONS
STRUCTURE NO. 101-6108

SCALE: | SHEET NO. 10 OF 79 SHEETS | STA. 47+00.74 TO STA. 52+63.50

F.A.U. RTE.	SECTION	COUNTY	TOTAL SHEETS	SHEET NO.
5077	99-00493-00-BR	WINNEBAGO	253	136

CONTRACT NO. 85529

FED. ROAD DIST. NO. 2 | ILLINOIS | FED. AID PROJECT BRM-5099(65)

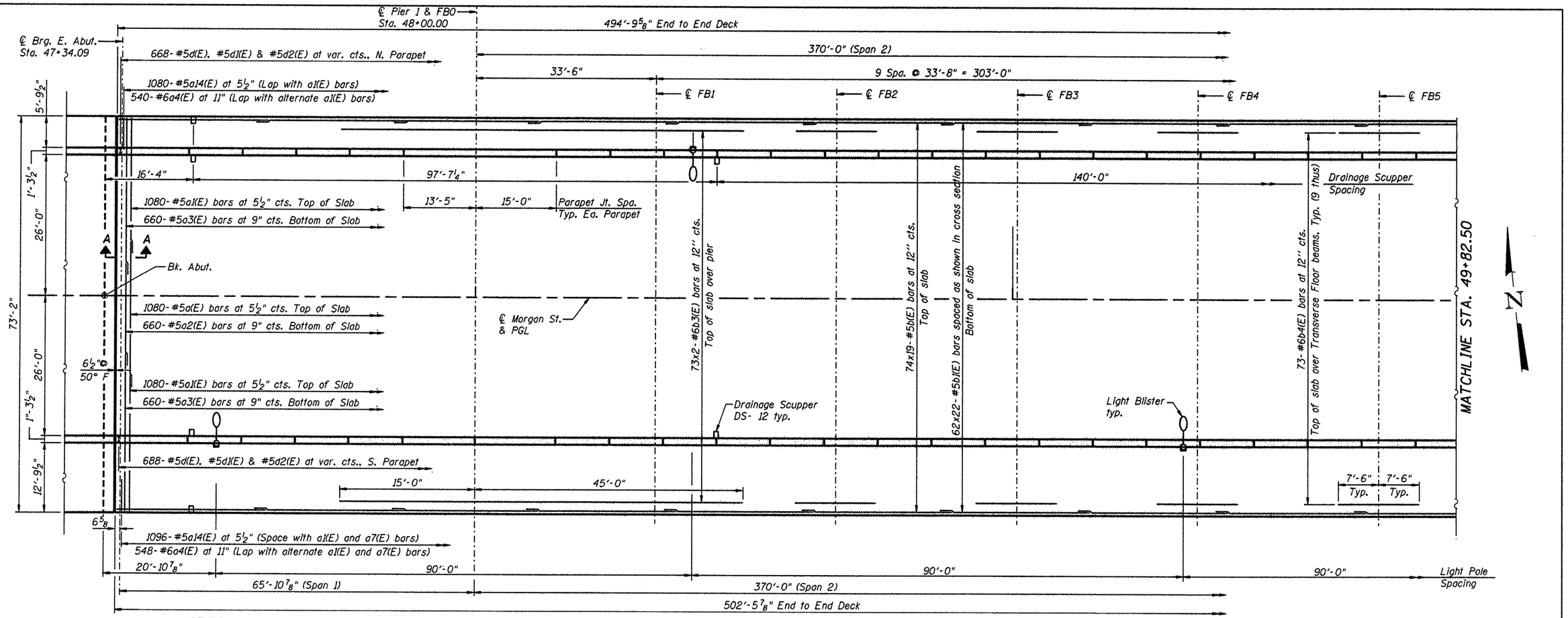

PLAN

NOTES:

1. See Sheet 13 & 14 of 79 for superstructure details.
2. See Sheet 13 of 79 for Section A-A.
3. Bars indicated thus 62x22-#5 etc. indicates 62 lines of bars with 22 lengths per line.
4. See Sheets 21 thru 22 of 79 for parapet reinforcement.
5. See Sheet 23 of 79 for Bicycle and Parapet Railing details.
6. See Sheets 115 thru 126 of 253 for lighting details.
7. See Sheet 16 of 79 for Drainage Scupper details.

MIN. BAR LAP

#5 bar = 2'-7"
#6 bar = 3'-1"

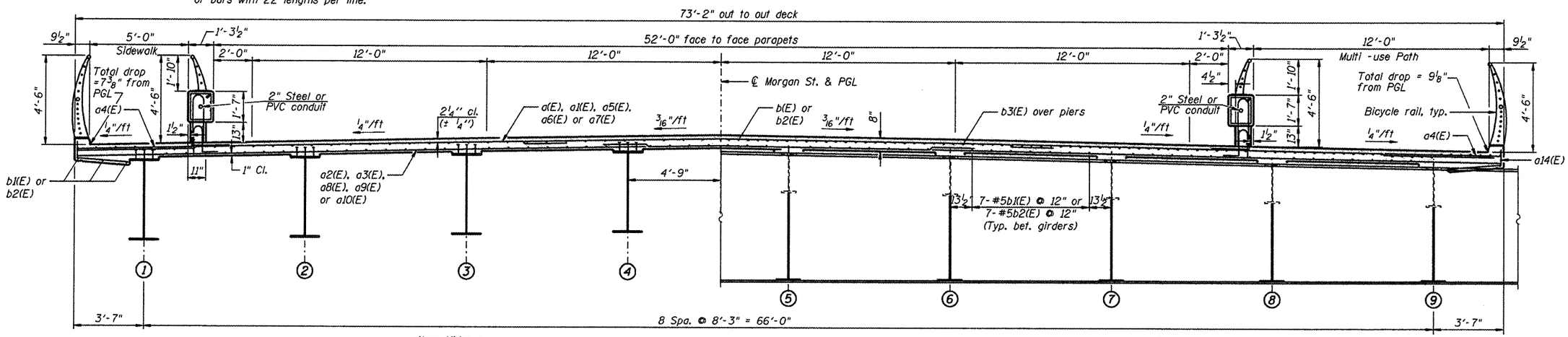

CROSS SECTION

L:\ROCKFORD\0826082\D-ex\CADD.Sheets\S.12.Deck Plan and Section.dgn

CMT ©Copyright CMT, Inc.
CRAWFORD, MURPHY & TILLY, INC.
CONSULTING ENGINEERS
License No. 184-000613

HNTB

DESIGNED	- PA, JDJ, BPD, CJW	REVISED	-
DRAWN	- GLD	REVISED	-
CHECKED	- RJK	REVISED	-
DATE	- 02/04/2011	REVISED	-

CITY OF ROCKFORD
MORGAN STREET BRIDGE

DECK PLAN & CROSS SECTION - I
STRUCTURE NO. 101-6108

SCALE: | SHEET NO. 11 OF 79 SHEETS | STA. 47+00.74 TO STA. 52+63.50

F.A.U. RTE.	SECTION	COUNTY	TOTAL SHEETS	SHEET NO.
5077	99-00493-00-BR	WINNEBAGO	253	137
		CONTRACT NO. 85529		
FED. ROAD DIST. NO. 2	ILLINOIS	FED. AID PROJECT BRM-5099(65)		

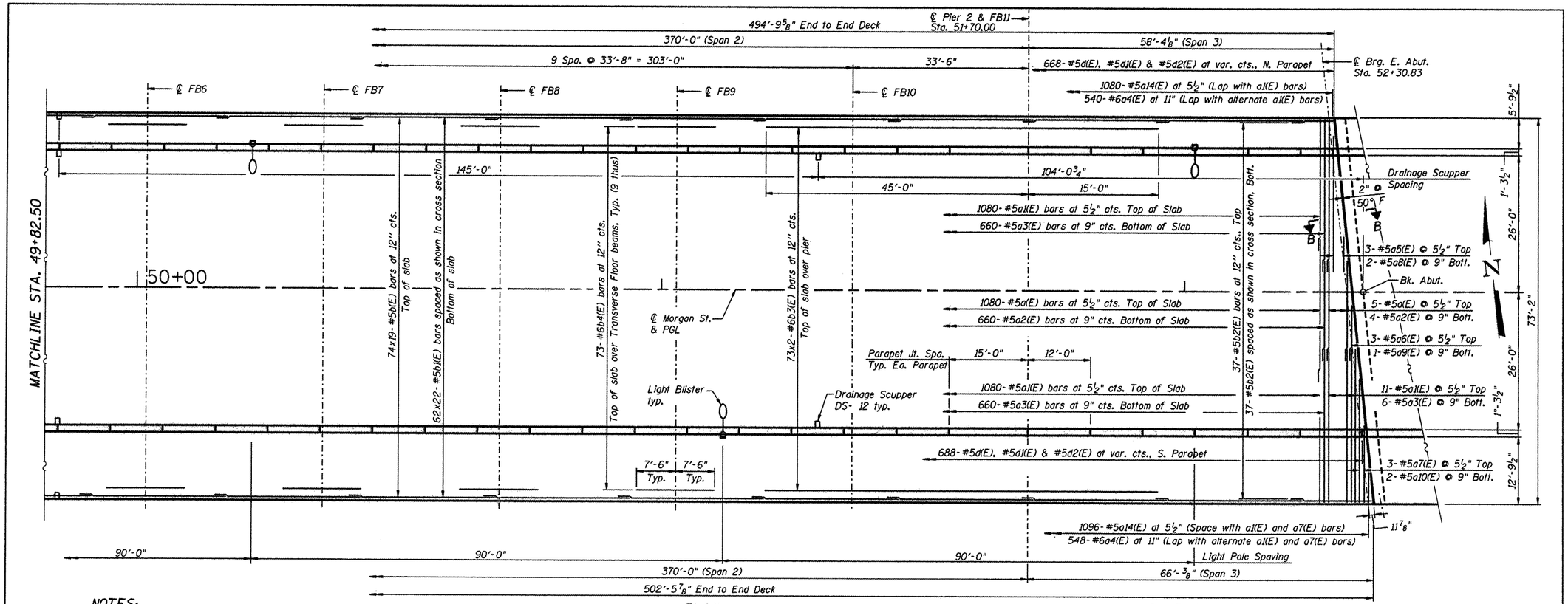

PLAN

NOTES:

1. See Sheet 13 & 14 of 79 for superstructure details.
2. See Sheet 13 of 79 for Section B-B.
3. Bars indicated thus 62x22-#5 etc. indicates 62 lines of bars with 22 lengths per line.
4. See Sheets 21 thru 22 of 79 for parapet reinforcement.
5. See Sheet 23 of 79 for Bicycle and Parapet Railing details.
6. See Sheets 115 thru 126 of 253 for lighting details.
7. See Sheet 16 of 79 for Drainage Scupper details.

MIN. BAR LAP

#5 bar = 2'-7"
#6 bar = 3'-1"

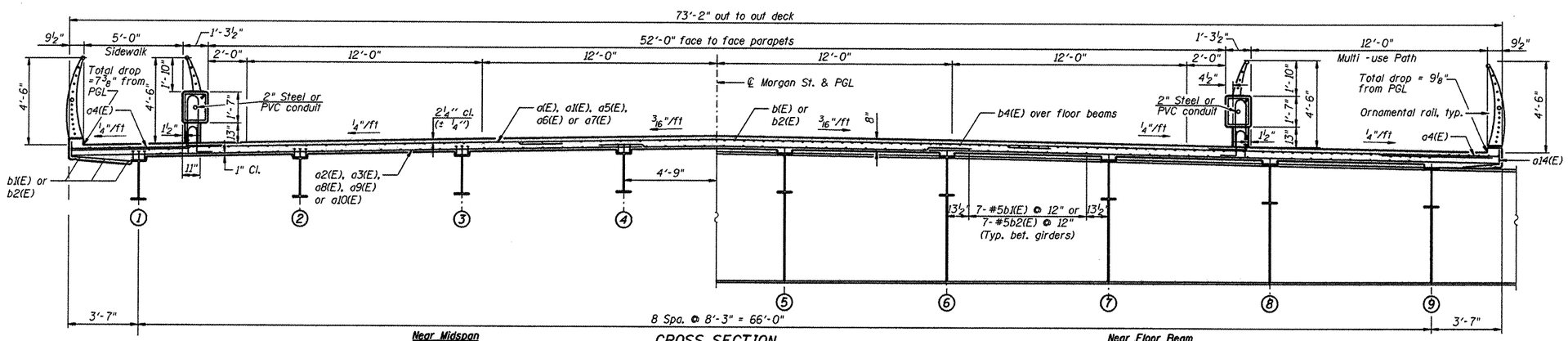

Near Midspan

CROSS SECTION

Near Floor Beam

CMT ©Copyright CMT, Inc. CRAWFORD, MURPHY & TILLY, INC. CONSULTING ENGINEERS License No. 184-000613	HNTB	DESIGNED - PA, JDJ, BPD, CJW	REVISED -	CITY OF ROCKFORD MORGAN STREET BRIDGE	DECK PLAN & CROSS SECTION - II STRUCTURE NO. 101-6108	F.A.U. RTE.	SECTION	COUNTY	TOTAL SHEETS	SHEET NO.
		DRAWN - GLD	REVISED -			5077	99-00493-00-BR	WINNEBAGO	253	138
		CHECKED - RJK	REVISED -					CONTRACT NO. 85529		
		DATE - 02/04/2011	REVISED -		SCALE: / SHEET NO. 12 OF 79 SHEETS / STA. 47+00.74 TO STA. 52+63.50	FED. ROAD DIST. NO. 2	ILLINOIS	FED. AID PROJECT BRM-5099(65)		

L:\ROCKFORD\0826882\Dgn\CADD_Sheets\S_13_Deck Plan and Section 2.dgn

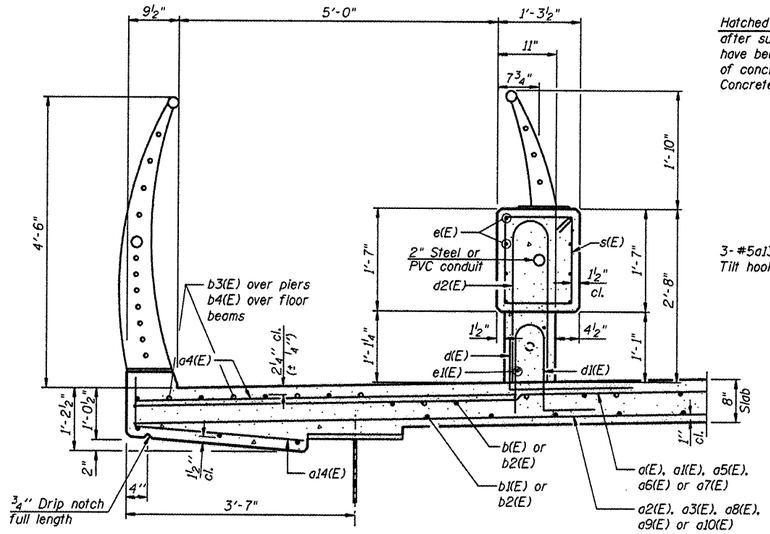

SECTION THRU PARAPET

(North Parapet Shown, South Parapet Similar)

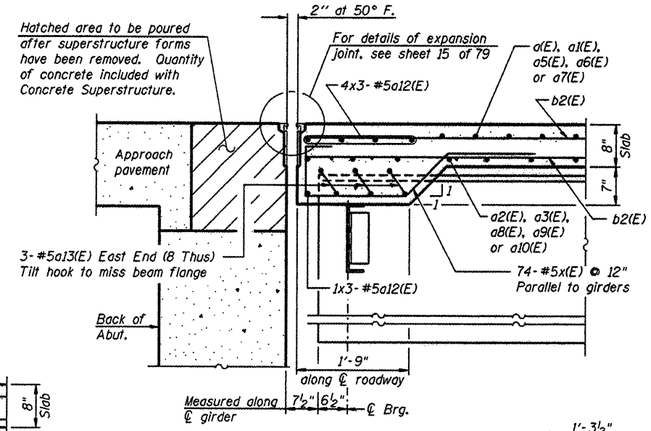

SECTION B-B

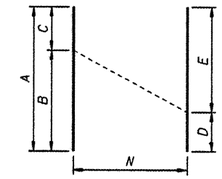

BAR CUTTING DIAGRAM

Bar	N Bars	A	B	C	D	E
a5(E)	3	28'-2"	22'-10"	5'-4"	14'-1"	14'-1"
a6(E)	3	30'-1"	26'-0"	4'-1"	17'-3"	12'-10"
a7(E)	3	27'-10"	22'-8"	5'-2"	13'-11"	13'-11"
a8(E)	2	31'-2"	26'-4"	4'-10"	19'-2"	12'-0"
a9(E)	1	22'-1"	14'-8"	7'-5"	-	-
a10(E)	2	33'-1"	27'-3"	5'-10"	20'-1"	13'-0"
b2(E)	74	21'-11"	14'-9"	7'-2"	10'-11"	11'-0"

Order A5(E) thru A10(E) bars full length. Cut according to Bar Cutting diagram d(E). Use remainder to splice with remaining. Order b2(E) bars full length. Cut according to Bar Cutting diagram. Use remainder to splice with remaining b(E) or b1(E) bars.

SUPERSTRUCTURE BILL OF MATERIAL

Bar	No.	Size	Length	Shape
a(E)	1085	#5	27'-4"	
a1(E)	2171	#5	25'-0"	
a2(E)	664	#5	19'-0"	
a3(E)	1326	#5	29'-2"	
a4(E)	1088	#6	6'-6"	
a5(E)	3	#5	28'-2"	
a6(E)	3	#5	30'-1"	
a7(E)	3	#5	27'-10"	
a8(E)	2	#5	31'-2"	
a9(E)	1	#5	22'-1"	
a10(E)	2	#5	33'-1"	
a12(E)	15	#5	25'-11"	
a13(E)	24	#5	9'-2"	
a14(E)	2176	#5	2'-11"	
a15(E)	96	#5	2'-0"	
b(E)	1406	#5	27'-10"	
b1(E)	1364	#5	24'-4"	
b2(E)	74	#5	21'-11"	
b3(E)	292	#5	32'-0"	
b4(E)	584	#5	15'-0"	
d(E)	1356	#5	3'-3"	
d1(E)	1356	#5	3'-9½"	
d2(E)	1356	#5	5'-0½"	
d3(E)	30	#6	9'-0"	
d4(E)	18	#6	3'-10"	
e(E)	32	#5	33'-2"	
e1(E)	32	#5	47'-9"	
e2(E)	80	#5	43'-9"	
e3(E)	32	#5	28'-6"	
e4(E)	16	#5	29'-2"	
e5(E)	16	#5	8'-5"	
e6(E)	16	#5	5'-9"	
e7(E)	164	#5	3'-9"	
e8(E)	8	#5	6'-5"	
e9(E)	16	#5	32'-0"	
e10(E)	8	#5	7'-10"	
s50(E)	2018	#4	5'-4"	
x(E)	74	#5	6'-5"	
x1(E)	74	#5	4'-9"	
Reinforcement Bars, Epoxy Coated			Pound	290,520
Concrete Superstructure			Cu. Yds.	1,057.1
Bridge Deck Grooving			Sq. Yds.	2,760
Protective Coat			Sq. Yds.	4,540

Bars indicated thus 1 x 2 - #8 etc. indicates 1 line of bars with 2 lengths per line.

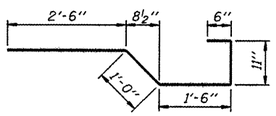

BAR x(E)

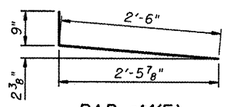

BAR a14(E)

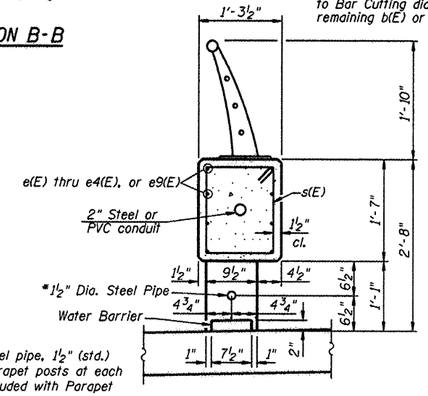

*Embed stainless steel pipe, 1½" (std.) 6" into concrete parapet posts at each end. Cost to be included with Parapet Railing, Special.

SECTION THRU PARAPET AT OPENING

(North Parapet Shown, South Parapet Similar)

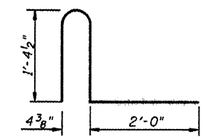

BAR d1(E)

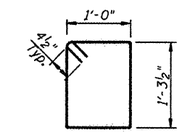

BAR s50(E)

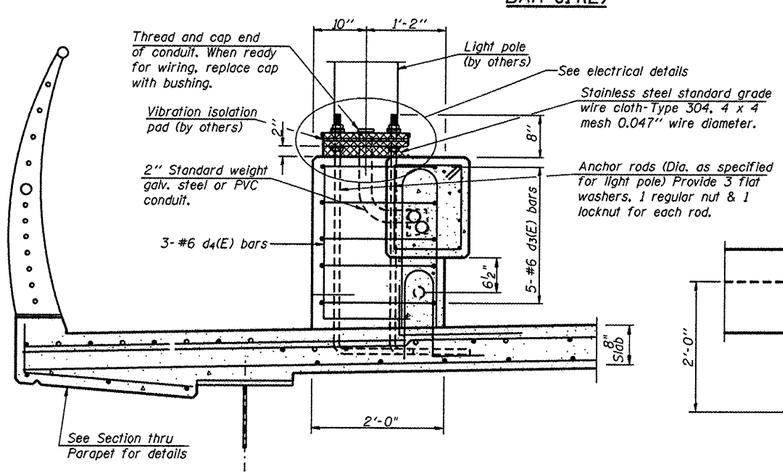

SECTION C-C

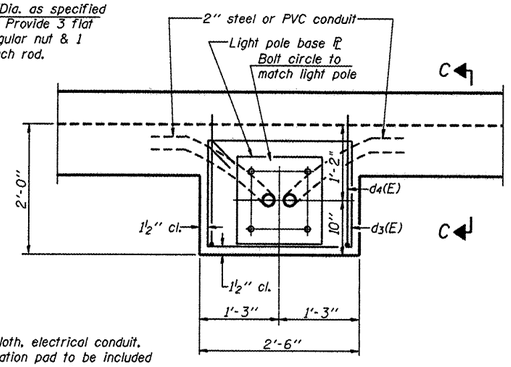

PLAN

NOTE:
Cost of stainless steel wire cloth, electrical conduit, anchor rods and vibration isolation pad to be included in the price for Light Pole, Aluminum, 40 Ft. M.H., 6 Ft. Mast Arm.

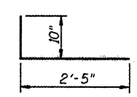

BAR d(E)

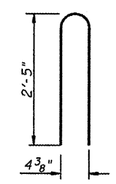

BAR d2(E)

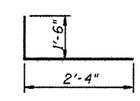

BAR d4(E)

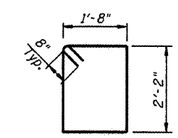

BAR d3(E)

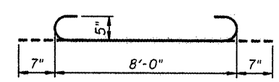

BAR a13(E)

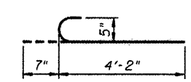

BAR x1(E)

L:\ROCKFORD\B626802\Dgn\CADD_Sheets\S_14_Superstructure Detail.dgn

CMT ©Copyright CMT, Inc. CRAWFORD, MURPHY & TILLY, INC. CONSULTING ENGINEERS License No. 184-000615

HNTB

DESIGNED - PA, JDJ, BPD, CJW	REVISED -		
DRAWN - GLD	REVISED -		
CHECKED - RJK	REVISED -		
DATE - 02/04/2011	REVISED -		

CITY OF ROCKFORD
MORGAN STREET BRIDGE

SUPERSTRUCTURE DETAILS - I
STRUCTURE NO. 101-6108

SCALE: | SHEET NO. 13 OF 79 SHEETS | STA. 47+00.74 TO STA. 52+63.50

F.A.U. RTE.	SECTION	COUNTY	TOTAL SHEETS	SHEET NO.
5077	99-00493-00-BR	WINNEBAGO	253	139
		CONTRACT NO. 85529		

FED. ROAD DIST. NO. 2 | ILLINOIS | FED. AID PROJECT BRM-5099(65)

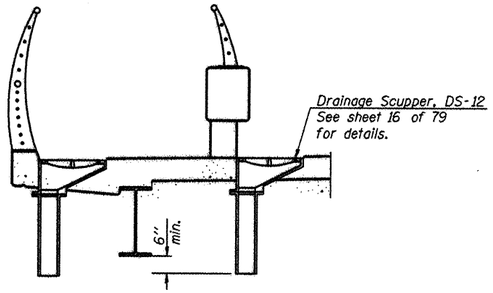

SECTION C-C

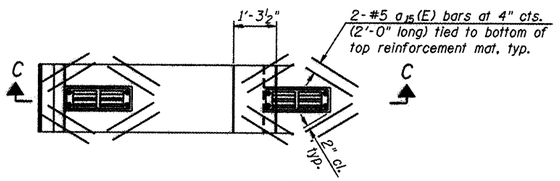

PLAN

Note:
Cut longitudinal reinforcement to clear drainage scuppers.

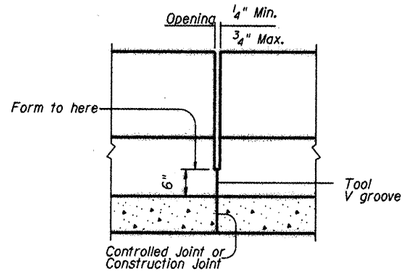

POST JOINT DETAIL

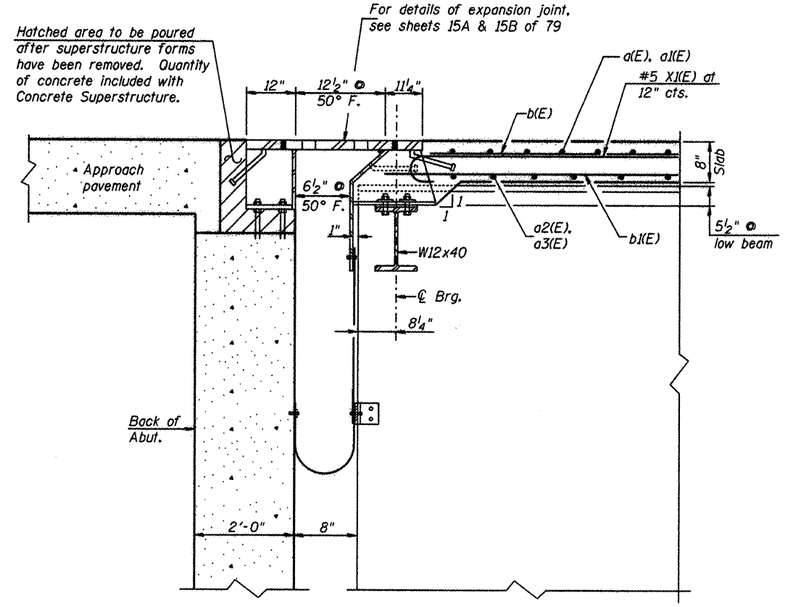

SECTION A-A

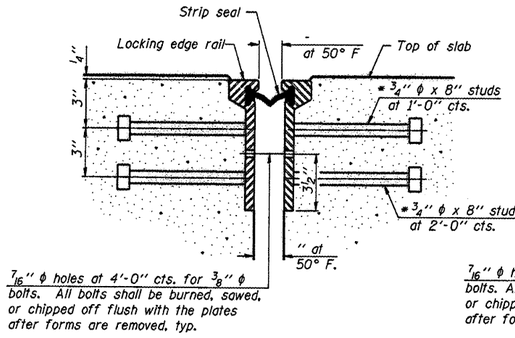

SECTION THRU
ROLLED RAIL JOINT

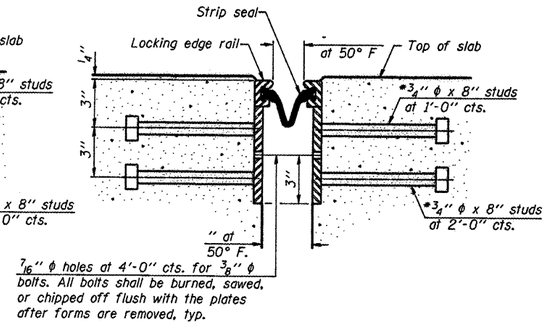

SECTION THRU
WELDED RAIL JOINT

* Granular or solid flux filled headed studs conforming to Article 1006.32 of the Std. Specs., automatically end welded.

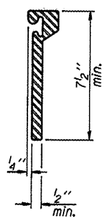

ROLLED
EXTRUDED RAIL

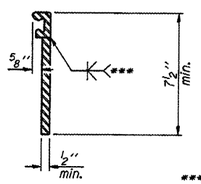

WELDED RAIL

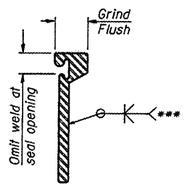

*** Back gouge not required if complete joint penetration is verified by mock-up.

LOCKING EDGE
RAIL SPLICE

The inside of the locking edge rail groove shall be free of weld residue.

Rolled rail shown, welded rail similar.

LOCKING EDGE RAILS

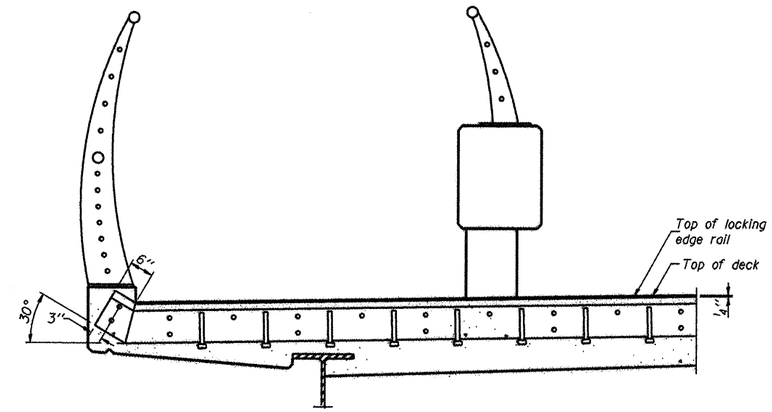

AT SIDEWALK (SIMILAR AT MULTI-USE PATH)

Shorter plates with a single row of studs at 12" cts. may be necessary on medians which are shallower than 9". See manufacturer's recommendation.

TYPICAL END TREATMENTS

Notes:

The strip seal shall be made continuous and shall have a minimum thickness of 1/4". The configuration of the strip seal shall match the configuration of the Locking Edge Rails. Open or "webbed" strip seal gland configurations are not permitted. The gland shall be sized for a maximum rated movement of 4 inches.

The Locking Edge Rails depicted are conceptual only, except for the minimum dimensions shown. The actual configuration of the Locking Edge Rails and matching strip seal may vary from manufacturer to manufacturer. Flanged edge rails will not be allowed. Locking Edge Rails may be spliced at slope discontinuities.

The manufacturer's recommended installation methods shall be followed.

The joint opening and deck dimensions detailed on the superstructure are based on a rolled rail expansion joint. If the Contractor elects to use the welded rail expansion joint, the opening and deck dimensions shall be modified according to the dimensions detailed on this sheet. Required modifications shall be made at no additional cost to the State.

All steel components shall be galvanized after fabrication according to Article 520.03 of the Standard Specifications.

Maximum space between rail segments at stage lines shall be 3/16", sealed with a suitable sealant.

Parapet plates and anchorage studs for skews > 30° included in the cost of Preformed Joint Strip Seal.

BILL OF MATERIAL

Item	Unit	Total
Preformed Joint Strip Seal	Foot	74

EJ-SSJ 7-1-10

L:\ROCKFORD\88268921\Dgn\C400_Sheets\S.15.Joint Detail.dgn

CMT CRAWFORD, MURPHY & TILLY, INC. CONSULTING ENGINEERS License No. 184-000613

HNTB

DESIGNED	- PA, JDJ, BPD, CJW	REVISED	-
DRAWN	- GLD	REVISED	-
CHECKED	- RJK	REVISED	-
DATE	- 02/04/2011	REVISED	-

CITY OF ROCKFORD
MORGAN STREET BRIDGE

PREFORMED JOINT STRIP SEAL
STRUCTURE NO. 101-6108

SCALE: | SHEET NO. 15 OF 79 SHEETS | STA. 47+00.74 TO STA. 52+63.50

F.A.U. RTE.	SECTION	COUNTY	TOTAL SHEETS	SHEET NO.
5077	99-00493-00-BR	WINNEBAGO	253	141

CONTRACT NO. 85529

FED. ROAD DIST. NO. 2 | ILLINOIS | FED. AID PROJECT BRM-5099(65)

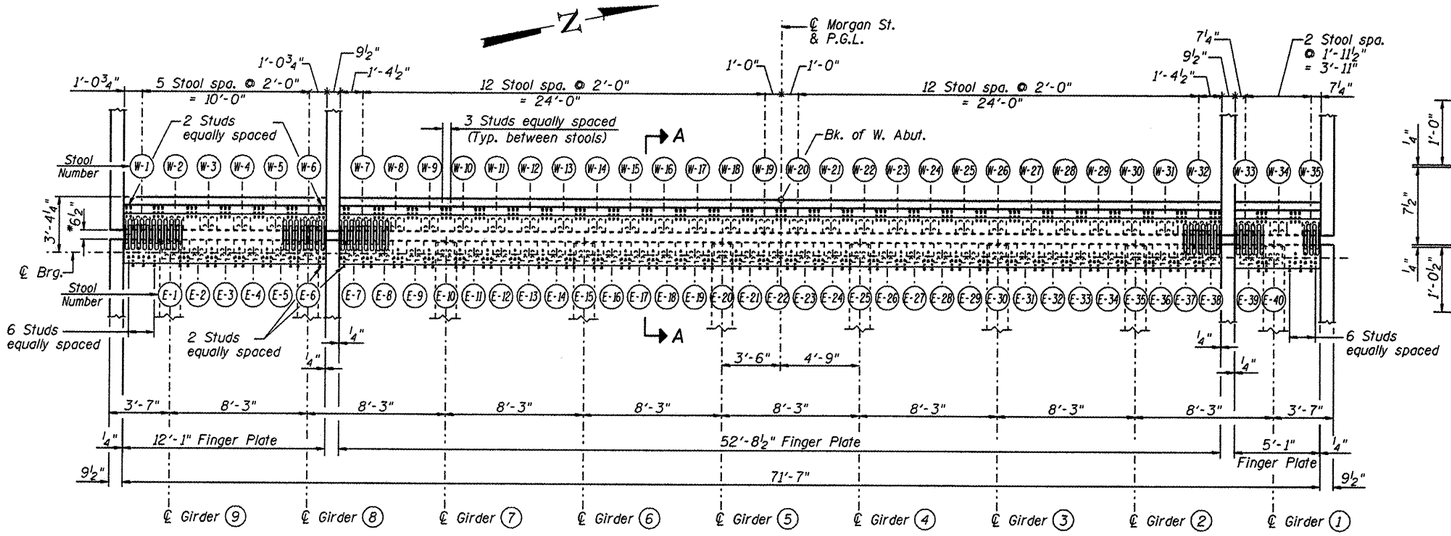

PLAN

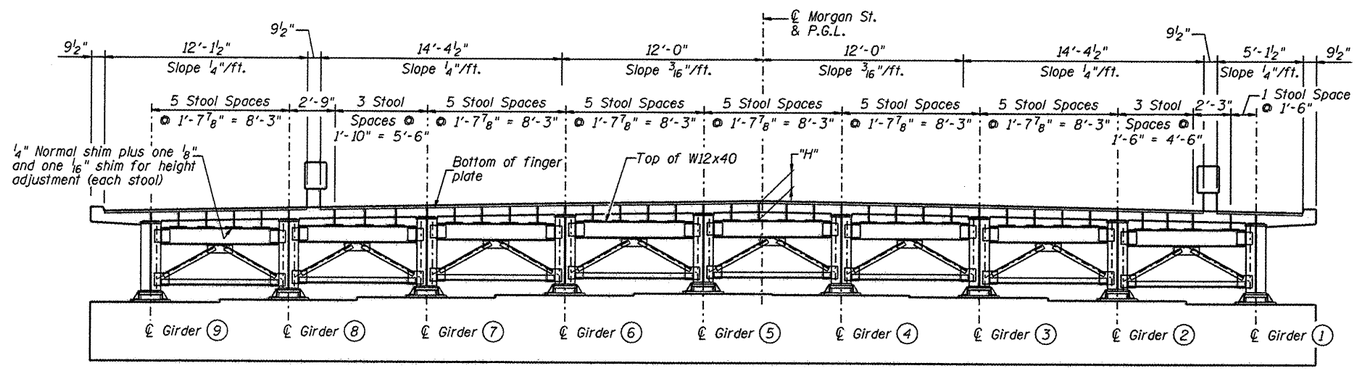

ELEVATION

TABLE OF STOOL HEIGHTS "H"

Stool Number	W-1	W-2	W-3	W-4	W-5	W-6	W-7	W-8	W-9	W-10	W-11	W-12	W-13	W-14	W-15	W-16	W-17	W-18	W-19	W-20
Height. (inches)	9¼"	9¼"	9¼"	9¼"	9¼"	9¼"	9¼"	9¼"	9¼"	9¼"	9¼"	9¼"	9¼"	9¼"	9¼"	9¼"	9¼"	9¼"	9¼"	9¼"

Stool Number	W-21	W-22	W-23	W-24	W-25	W-26	W-27	W-28	W-29	W-30	W-31	W-32	W-33	W-34	W-35
Height. (inches)	9¼"	9¼"	9¼"	9¼"	9¼"	9¼"	9¼"	9¼"	9¼"	9¼"	9¼"	9¼"	9¼"	9¼"	9¼"

Stool Number	E-1	E-2	E-3	E-4	E-5	E-6	E-7	E-8	E-9	E-10	E-11	E-12	E-13	E-14	E-15	E-16	E-17	E-18	E-19	E-20
Height. (inches)	7⅛"	11 11/16"	12 1/16"	12½"	12 15/16"	7 3/16"	12"	12 7/16"	12⅞"	7 1/16"	11⅝"	12"	12 7/16"	12⅞"	7 3/16"	11⅝"	11 15/16"	12¼"	12 9/16"	7 3/16"

Stool Number	E-21	E-22	E-23	E-24	E-25	E-26	E-27	E-28	E-29	E-30	E-31	E-32	E-33	E-34	E-35	E-36	E-37	E-38	E-39	E-40
Height. (inches)	12 5/16"	12⅝"	12 7/16"	12⅛"	7 11/16"	12 11/16"	12 3/8"	12 1/16"	11¾"	7¼"	12⅞"	12½"	12 1/16"	11⅝"	7⅛"	13"	12⅝"	12¼"	11 11/16"	7 3/16"

Stool heights shown in the table are calculated from the top of W12x40 to bottom of finger plate and are theoretical. Heights shown are at ℄ bearing and cross frame and include ¼" nominal shims. Contractor shall field verify elevation of supporting element and adjust stool heights accordingly. Cost included in unit price bid for Furnishing and Erecting Structural steel.

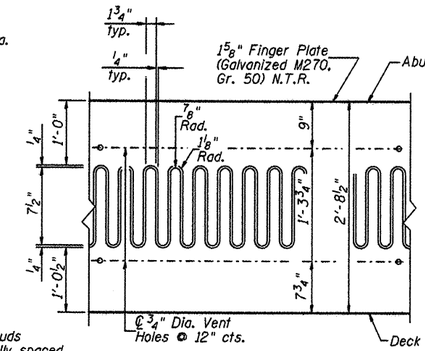

FLAME CUTTING DIAGRAM

Cut from ℙ 1⅝" x 2'-8½" x 12'-1"
Cut from ℙ 1⅝" x 2'-8½" x 52'-8½"
Cut from ℙ 1⅝" x 2'-8½" x 5'-1"

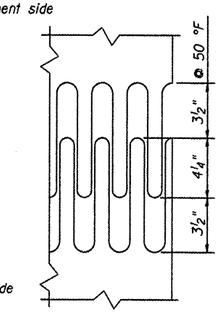

FINGER PLATE SETTING DIAGRAM

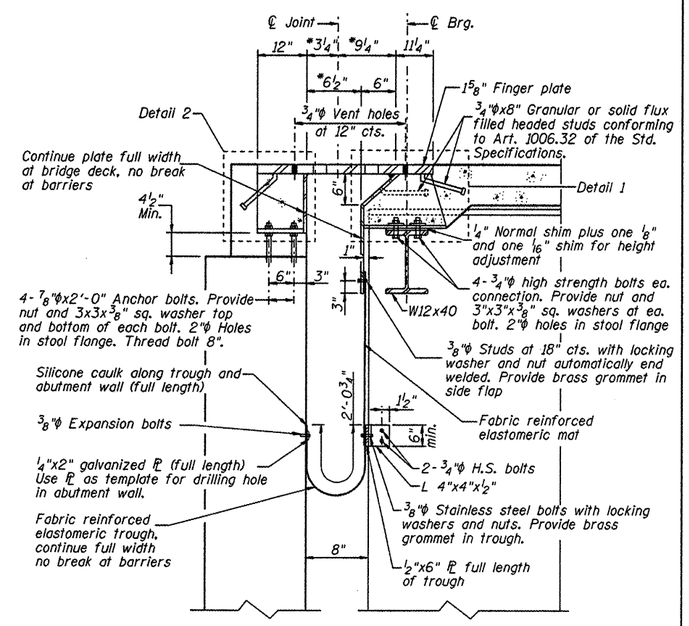

SECTION A-A

*Dimensions shown are at 50° F.

NOTES:

1. Steel for finger plate shall be galvanized AASHTO M270, Gr. 50.
2. The finger plate shall be flame cut as provided in Article 505.04(k) of the Standard Specifications using a ¼" wide cut.
3. All dimensions for expansion gaps at 50°F. except as noted.
4. For Detail 1, Detail 2 & additional notes see Sheet 15B of 79.
5. Finger plate expansion joints shall be assembled in thier final relative position with the ends in place for shop inspection and acceptance.

141A

CMT ©Copyright CMT, Inc. CRAMFORD, MURPHY & TILLY, INC. CONSULTING ENGINEERS License No. 184-000613

HNTB

DESIGNED	- PA, JDJ, BPD, CJW	REVISED	-
DRAWN	- GLD	REVISED	-
CHECKED	- RJK	REVISED	-
DATE	- 02/04/2011	REVISED	-

CITY OF ROCKFORD
MORGAN STREET BRIDGE

FINGER PLATE EXP. JOINT DETAILS - I
STRUCTURE NO. 101-6108

SCALE: | SHEET NO. 15A OF 79 SHEETS | STA. 47+00.74 TO STA. 52+63.50

F.A.U. RTE.	SECTION	COUNTY	TOTAL SHEETS	SHEET NO.
5077	99-00493-00-BR	WINNEBAGO	253	141A

CONTRACT NO. 85529

FED. ROAD DIST. NO. 2 | ILLINOIS | FED. AID PROJECT BRM-5099(165)

\\hbor-vrock\for-d\0826082\dgn\cadd_sheets\S_15A_Finger PLExp Jt_D01.dgn

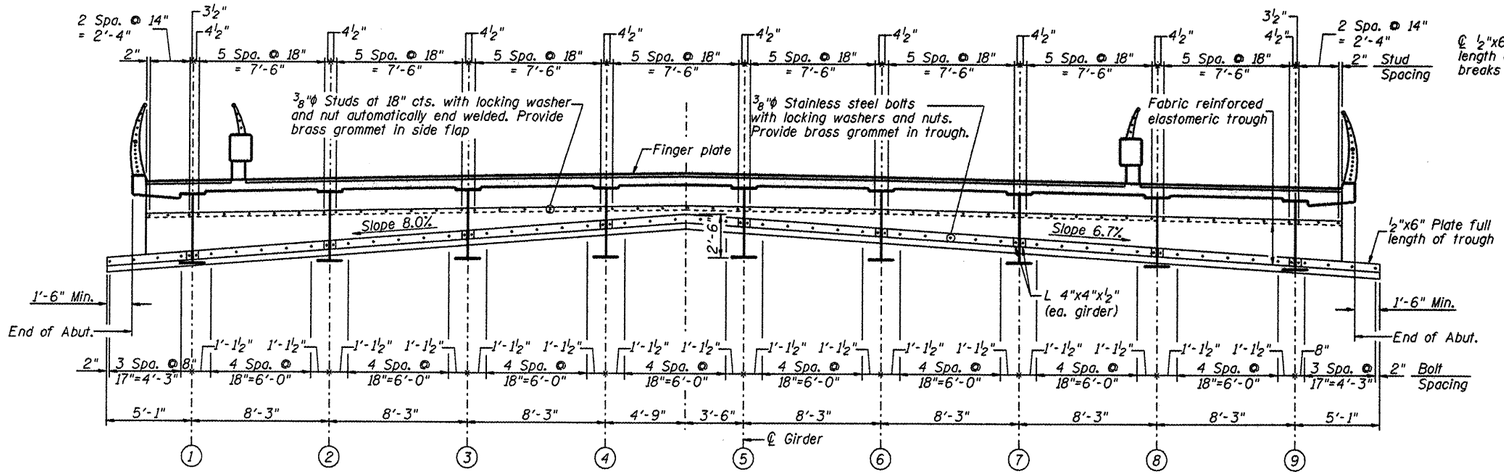

SECTION AT TROUGH

(Looking East)

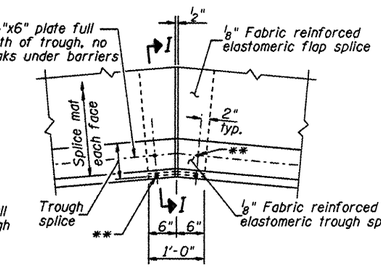

TROUGH SPLICE DETAIL

**3/8" Stainless Steel bolts w/washers & nuts. Provide brass grommet in trough.

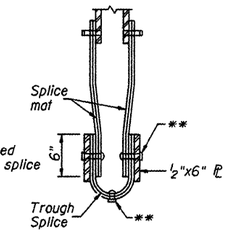

SECTION I-I

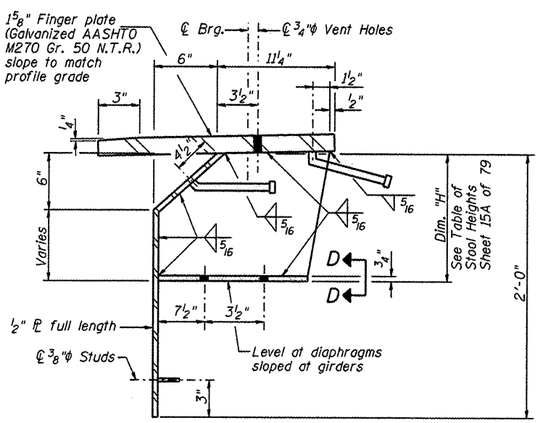

DETAIL 1

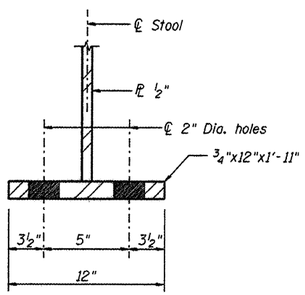

VIEW D-D

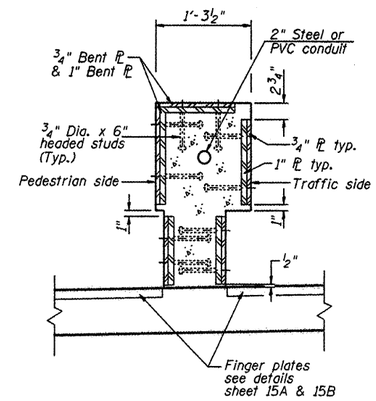

SECTION C-C

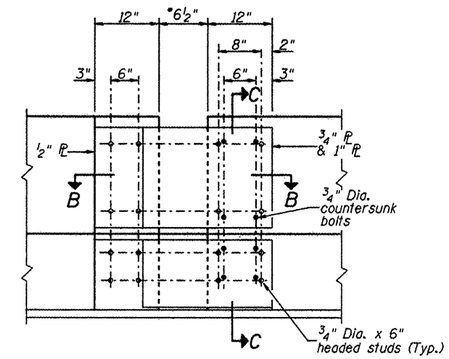

SLIDING PLATE DETAIL

• Dimensions shown are at 50° F.

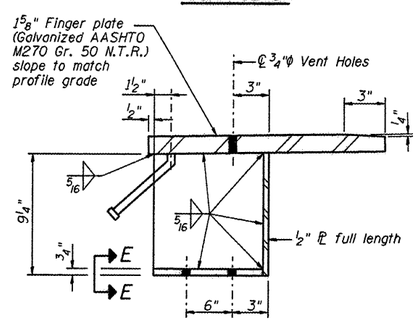

DETAIL 2

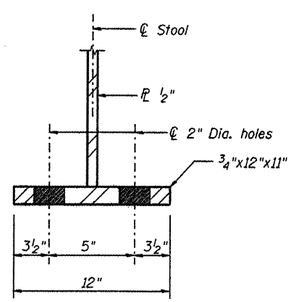

VIEW E-E

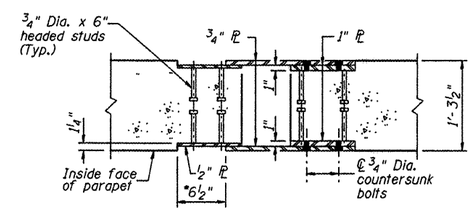

SECTION B-B

BILL OF MATERIAL

Item	Unit	Quantity
Finger Plate Expansion Joint, 6½"	Foot	72

CMT ©Copyright CMT, Inc. CRAWFORD, MURPHY & TILLY, INC. CONSULTING ENGINEERS License No. 184-000613

HNTB

DESIGNED	- PA, JDJ, BPD, CJW	REVISED	-
DRAWN	- GLD	REVISED	-
CHECKED	- RJK	REVISED	-
DATE	- 02/04/2011	REVISED	-

CITY OF ROCKFORD
MORGAN STREET BRIDGE

FINGER PLATE EXP. JOINT DETAILS – II
STRUCTURE NO. 101-6108

SCALE: | SHEET NO. 15B OF 79 SHEETS | STA. 47+00.74 TO STA. 52+63.50

F.A.U. RTE.	SECTION	COUNTY	TOTAL SHEETS	SHEET NO.
5077	99-00493-00-BR	WINNEBAGO	253	141B

CONTRACT NO. 85529

FED. ROAD DIST. NO. 2 | ILLINOIS | FED. AID PROJECT BRM-5099(65)

141B

v:\hbu-r\cadfiles\08226082\dgn\cadd_sheets\S_15B_Finger PL Exp Jt_Dtl 2.dgn

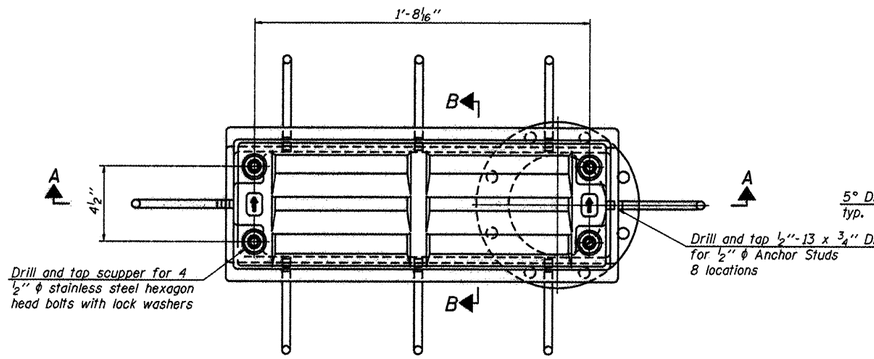

PLAN

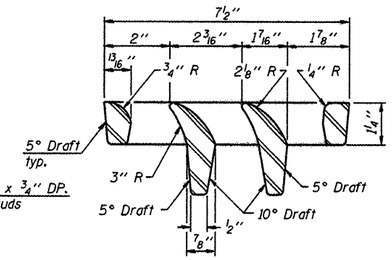

VANE GRATE DETAIL

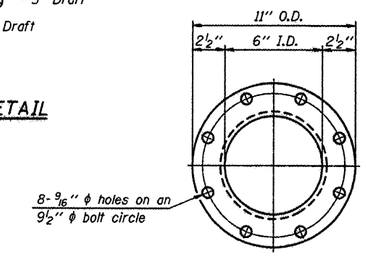

Notes:

All cast iron parts shall be gray iron conforming to the requirements of AASHTO M 105, Class 35B.

Bolts, anchor studs, washers and nuts shall conform to the requirements of ASTM A 307 and shall be galvanized according to AASHTO M 232.

Downspouts located on the exterior side of a painted steel fascia beam shall be painted with the finish coat specified for the exterior side of the fascia beam.

As an alternate, bolts, anchor studs, washers and nuts may be stainless steel according to Article 1006.29(d) of the Standard Specifications.

Structural steel weldments of equal sections and of the same configuration may be substituted for the cast iron scupper frame. Fillet or full penetration welds shall be used for the weldments. Details shall be submitted to the Engineer for approval. Structural steel weldments shall not be substituted for the cast iron scupper grate. Structural steel frames and downspouts shall be galvanized according to AASHTO M111.

The Contractor shall take appropriate measures to assure that Protective Coat is not applied to the scupper.

Cost of the Grate, Frame, Downspout, Anchor Studs, Bolts, Washers and Nuts including complete installation of the scupper shall be paid for at the contract unit price each for Drainage Scupper, DS-12.

Alternate fiberglass downspout conforming to ASTM D 2996 with a short-time rupture strength hoop tensile stress of 30,000 psi min. may be used in lieu of the cast iron or steel equivalent.

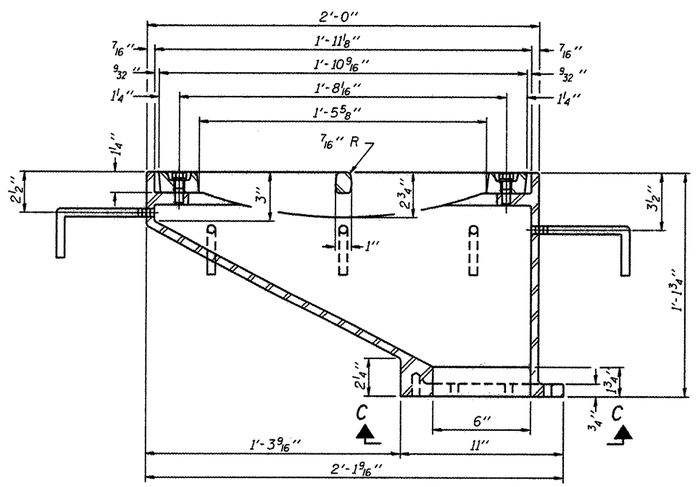

SECTION A-A

See sheet 14 of 79 for scupper location relative to parapet.

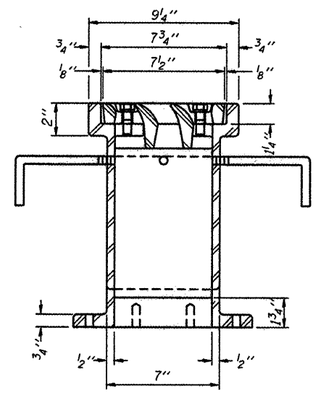

SECTION B-B

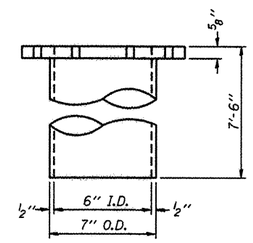

DOWNSPOUT

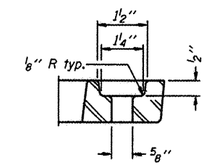

BOLT HOLE DETAIL

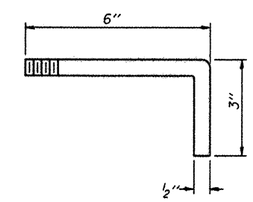

ANCHOR STUD DETAIL

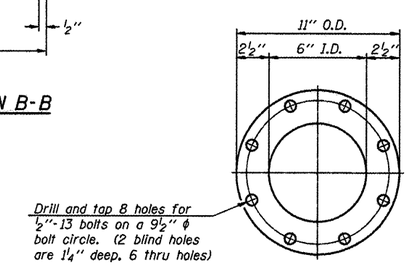

VIEW C-C

BILL OF MATERIAL

ITEM	UNIT	QUANTITY
Drainage Scupper, DS-12	Each	12

DS-12 7-1-10

L:\ROCKFORD\B826882\Drawn\CADD_Sheets\S.16_Scupper Detail.dgn

CMT ©Copyright CMT, Inc. CRAWFORD, MURPHY & TILLY, INC. CONSULTING ENGINEERS License No. 184-000613

HNTB

DESIGNED	- PA, JDJ, BPD, CJW	REVISED	-
DRAWN	- GLD	REVISED	-
CHECKED	- RJK	REVISED	-
DATE	- 02/04/2011	REVISED	-

CITY OF ROCKFORD
MORGAN STREET BRIDGE

DRAINAGE SCUPPER, DS-12
STRUCTURE NO. 101-6108

SCALE: | SHEET NO. 16 OF 79 SHEETS | STA. 47+00.74 TO STA. 52+63.50

F.A.U. RTE.	SECTION	COUNTY	TOTAL SHEETS	SHEET NO.
5077	99-00493-00-BR	WINNEBAGO	253	142

CONTRACT NO. 85529

FED. ROAD DIST. NO. 2 | ILLINOIS | FED. AID PROJECT BRM-5099(165)

Notes:
See sheet 18 of 79 for Sections C-C, D-D & F-F.
$a_{20}(E)$ and $a_{21}(E)$ bar spacings measured along ℄ Rdwy.

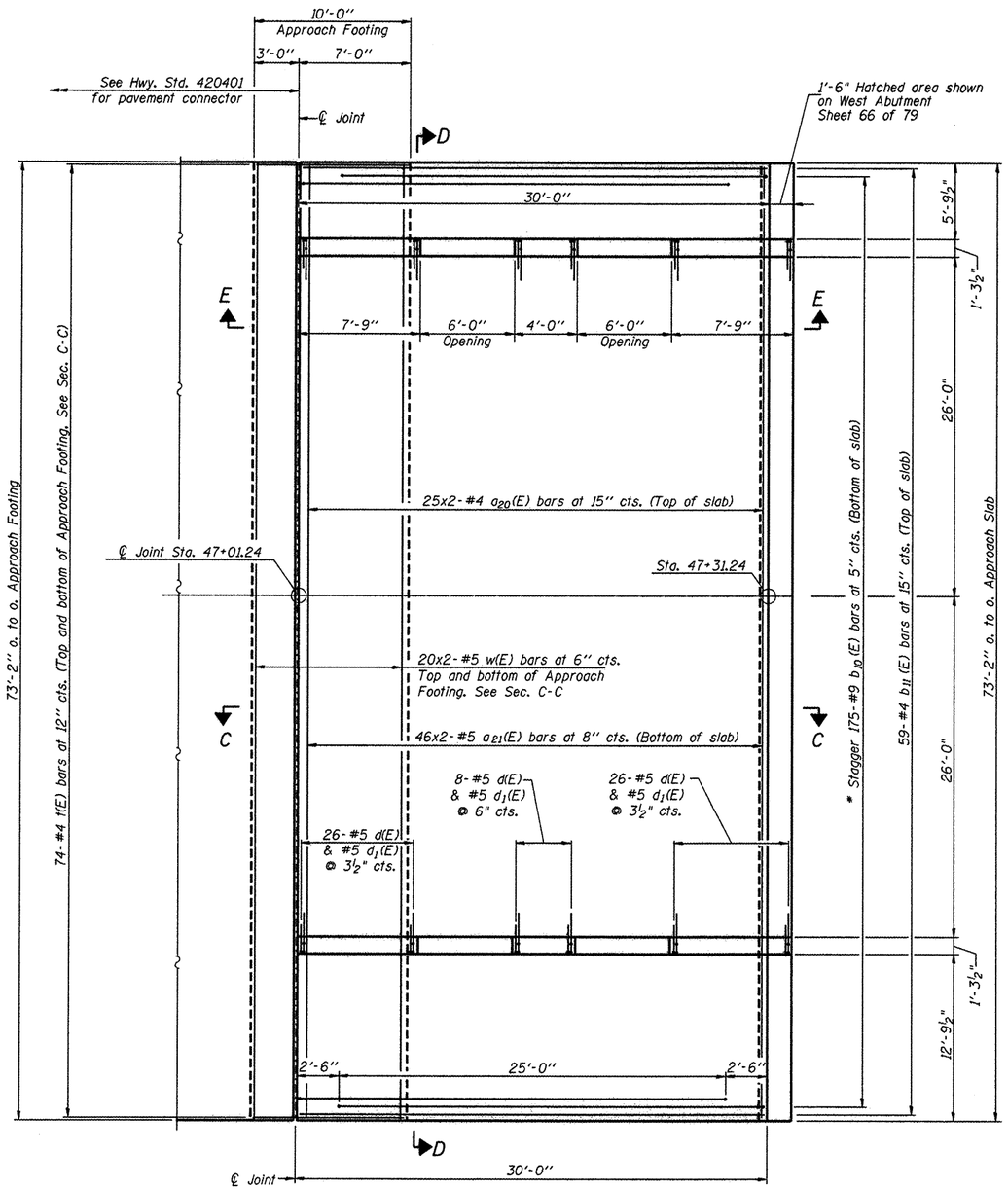

PLAN

* Tilt #9 b_{10}(E) bars as required to maintain clearance.

*** Cost included with Concrete Superstructure.

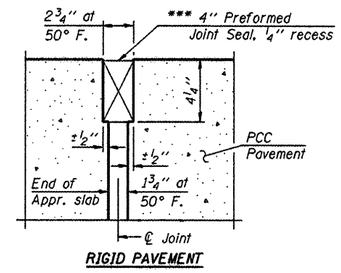

RIGID PAVEMENT

DETAIL A

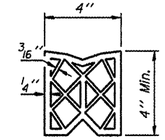

PREFORMED
JOINT SEAL

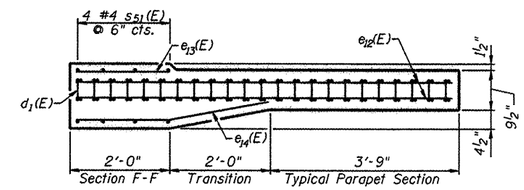

SECTION B-B

*Distance to first anchor post
on roadway parapet.
2'-6" (North parapet)
3'-6" (South Abutment)

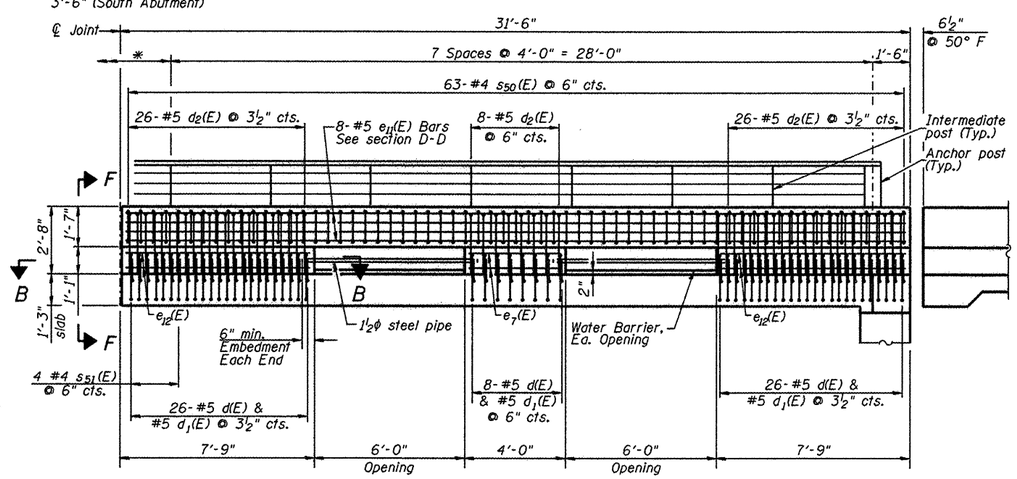

VIEW E-E

L:\ROCKFORD\0828682\D-ex\CADD_Sheets\S17_W_BRIDGE APP SLAB DTLS.DGN

CMT ©Copyright CMT, Inc. CRAWFORD, MURPHY & TILLY, INC. CONSULTING ENGINEERS License No. 184-000613	HNTB	DESIGNED - PA, JDJ, BPD, CJW	REVISED -	CITY OF ROCKFORD MORGAN STREET BRIDGE	WEST BRIDGE APPROACH SLAB DETAILS - I STRUCTURE NO. 101-6108
		DRAWN - GLD	REVISED -		
		CHECKED - RJK	REVISED -		
		DATE - 02/04/2011	REVISED -		SCALE: SHEET NO. 17 OF 79 SHEETS STA. 47+00.74 TO STA. 52+63.50

F.A.U. RTE.	SECTION	COUNTY	TOTAL SHEETS	SHEET NO.
5077	99-00493-00-BR	WINNEBAGO	253	143
		CONTRACT NO. 85529		
FED. ROAD DIST. NO. 2	ILLINOIS	FED. AID PROJECT BRM-5099(65)		

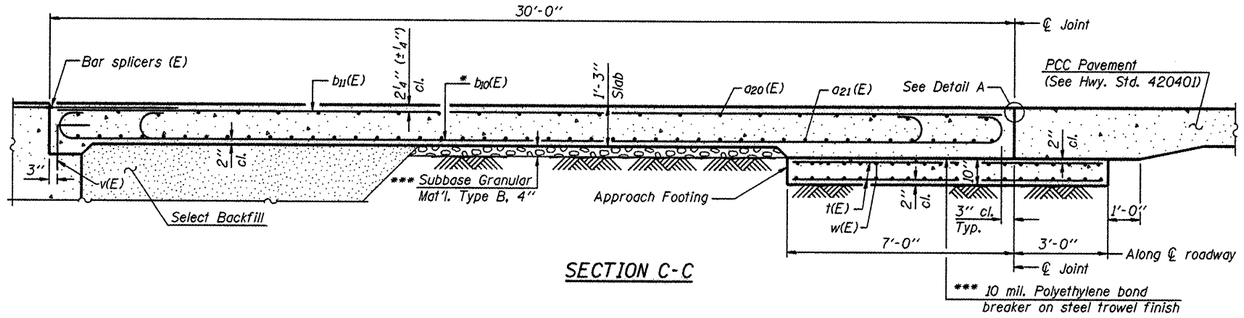

SECTION C-C

Notes:
See sheet 17 of 79 for Detail A and Section F-F.
Approach slab and parapet concrete shall be paid for as Concrete Superstructure.
Approach footing concrete shall be paid for as Concrete Structures.
Reinforcement shall be paid for as Reinforcement Bars, Epoxy Coated.
For v(E) bar details, see sheet 66 of 79.
The approach footing maximum applied service bearing pressure (Qmax) = 2.0 ksf.
For bar splicer details, see sheet 76 of 79.
Cost of excavation for approach footing included with Concrete Structures.
For Select Backfill placement and MSE wall Treatment, see sheets 69 thru 72 of 79.
For additional parapet details, see sheet 13 of 79.

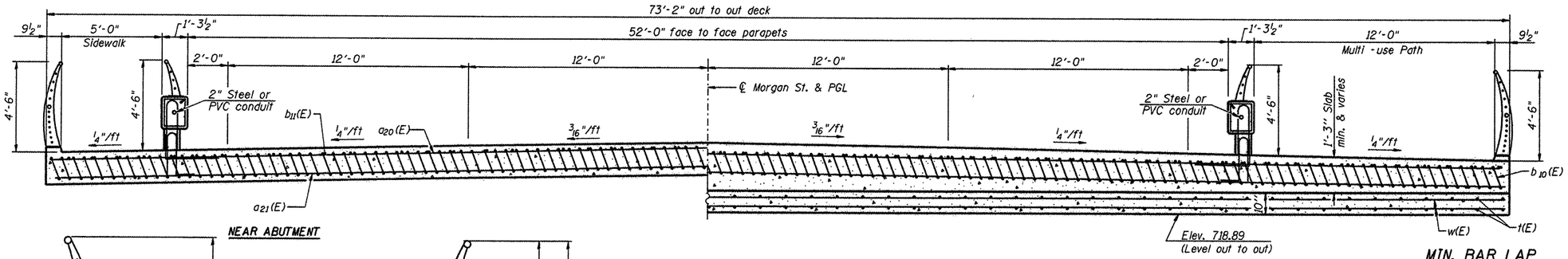

SECTION D-D
(See Plan for dimensions not shown)

AT APPROACH FOOTING
* Tilt #9 b_{10}(E) bars as required to maintain clearance.
*** Cost included with Concrete Superstructure.

MIN. BAR LAP
#4 bar = 2'-7"
#5 bar = 3'-3"

NEAR ABUTMENT

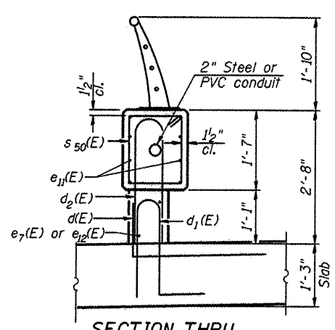

SECTION THRU NORTH PARAPET

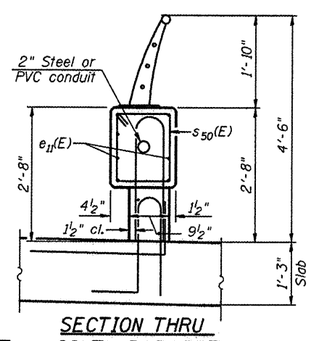

SECTION THRU SOUTH PARAPET

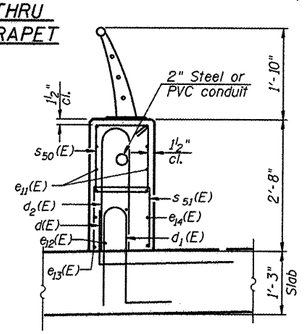

SECTION F-F

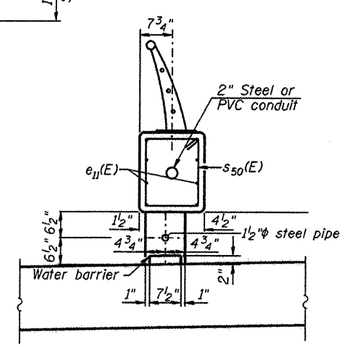

SECTION THRU PARAPET AT OPENING

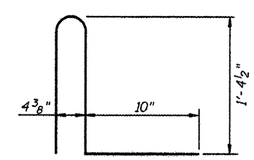

BAR d_1(E)

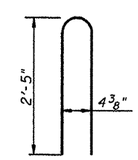

BAR d_2(E)

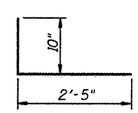

BAR d(E)

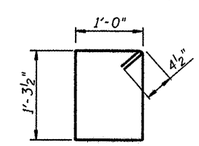

BAR s_{50}(E)

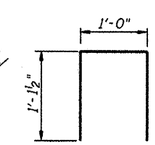

BAR s_{51}(E)

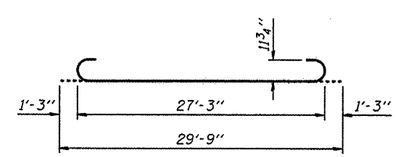

BAR b_{10}(E)

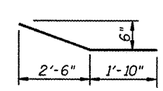

BAR e_{14}(E)

WEST APPROACH
BILL OF MATERIAL

Bar	No.	Size	Length	Shape
a_{20}(E)	50	#4	37'-9"	
a_{21}(E)	92	#5	38'-1"	
b_{10}(E)	175	#9	29'-9"	
b_{11}(E)	59	#4	29'-8"	
d(E)	120	#5	3'-3"	
d_1(E)	120	#5	3'-9½"	
d_2(E)	120	#5	5'-0½"	
e_{11}(E)	16	#5	31'-2"	
e_{12}(E)	8	#5	7'-6"	
e_7(E)	4	#5	3'-9"	
e_{13}(E)	4	#5	1'-9"	
e_{14}(E)	4	#5	5'-5"	
s_{50}(E)	126	#4	5'-4"	
s_{51}(E)	8	#4	3'-3"	
t(E)	148	#4	9'-8"	
w(E)	80	#5	38'-1"	
Concrete Superstructure			Cu. Yd.	115.8
Concrete Structures			Cu. Yd.	22.6
Reinforcement Bars, Epoxy Coated			Pound	30,530
Bridge Deck Grooving			Sq. Yd.	164.0
Protective Coat			Sq. Yd.	257.0

CMT ©Copyright CMT, Inc.
CRAWFORD, MURPHY & TILLY, INC.
CONSULTING ENGINEERS
License No. 184-000613

HNTB

DESIGNED - PA, JDJ, BPD, CJW	REVISED -		
DRAWN - GLD	REVISED -		
CHECKED - RJK	REVISED -		
DATE - 02/04/2011	REVISED -		

CITY OF ROCKFORD
MORGAN STREET BRIDGE

WEST BRIDGE APPROACH SLAB DETAILS - II
STRUCTURE NO. 101-6108

SCALE: | SHEET NO. 18 OF 79 SHEETS | STA. 47+00.74 TO STA. 52+63.50

F.A.U. RTE.	SECTION	COUNTY	TOTAL SHEETS	SHEET NO.
5077	99-00493-00-BR	WINNEBAGO	253	144
		CONTRACT NO. 85529		
FED. ROAD DIST. NO. 2	ILLINOIS	FED. AID PROJECT BRM-5099(65)		

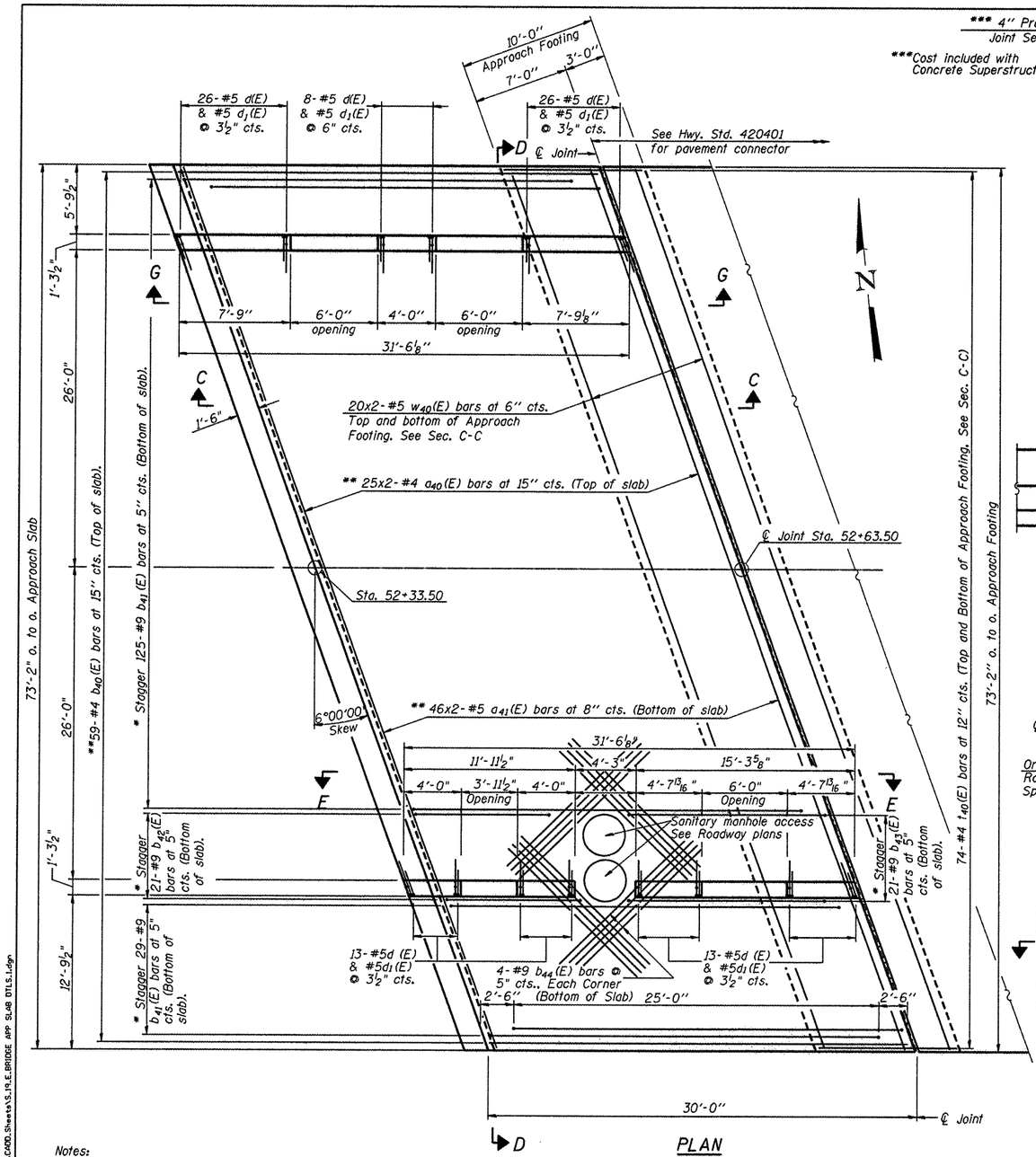

PLAN

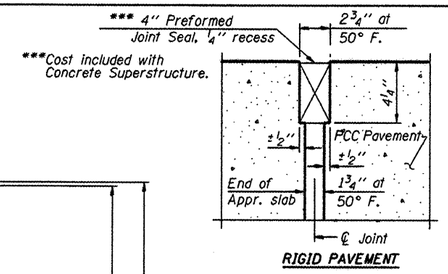

RIGID PAVEMENT

DETAIL A

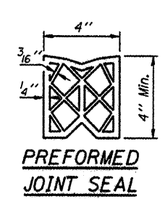

PREFORMED JOINT SEAL

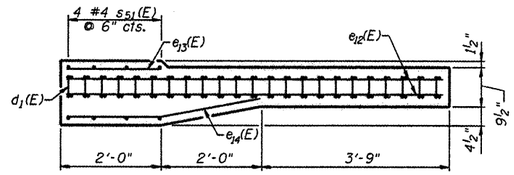

SECTION B-B

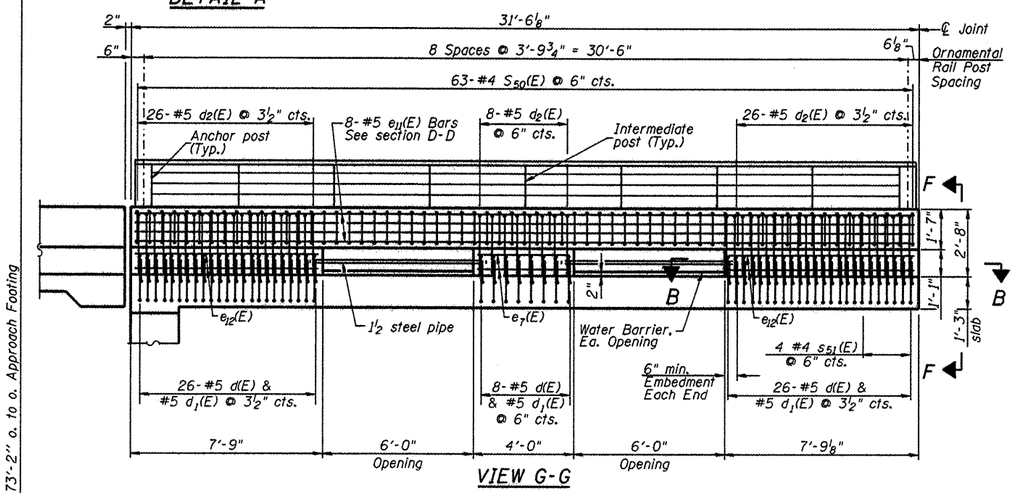

VIEW G-G

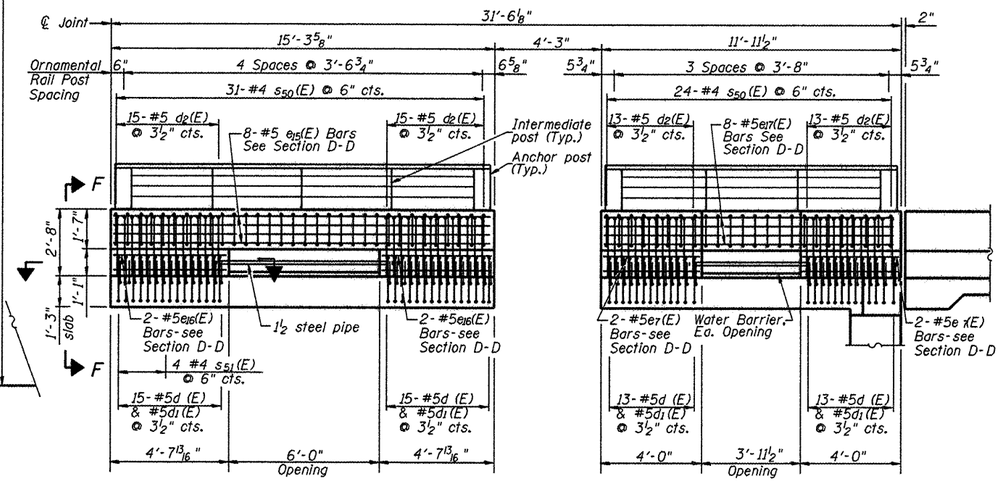

VIEW E-E

Notes:

See sheet 20 of 79 for Sections C-C, D-D & F-F.

$a_{40}(E)$ and $a_{41}(E)$ bar spacings measured along ℄ Rdwy.

* Tilt #9 $b_{41}(E)$, #9 $b_{42}(E)$, and #9 $b_{43}(E)$ bars as required to maintain clearance.

** Cut $a_{40}(E)$, $a_{41}(E)$, and $b_{40}(E)$ bars to fit around proposed sewer junction box openings.

L:\ROCKFORD\GB26882\D-ea\CADD_Sheets\S_19_E_BRIDGE APP SLAB DTLS.dgn

CMT ©Copyright CMT, Inc. CRAWFORD, MURPHY & TILLY, INC. CONSULTING ENGINEERS License No. 184-000615

HNTB

DESIGNED - PA, JDJ, BPD, CJW	REVISED -		
DRAWN - GLD	REVISED -		
CHECKED - RJK	REVISED -		
DATE - 02/04/2011	REVISED -		

CITY OF ROCKFORD
MORGAN STREET BRIDGE

EAST BRIDGE APPROACH SLAB DETAILS - I
STRUCTURE NO. 101-6108

SCALE: | SHEET NO. 19 OF 79 SHEETS | STA. 47+00.74 TO STA. 52+63.50

F.A.U. RTE.	SECTION	COUNTY	TOTAL SHEETS	SHEET NO.
5077	99-00493-00-BR	WINNEBAGO	253	145
		CONTRACT NO. 85529		

FED. ROAD DIST. NO. 2 | ILLINOIS | FED. AID PROJECT BRM-5099(65)

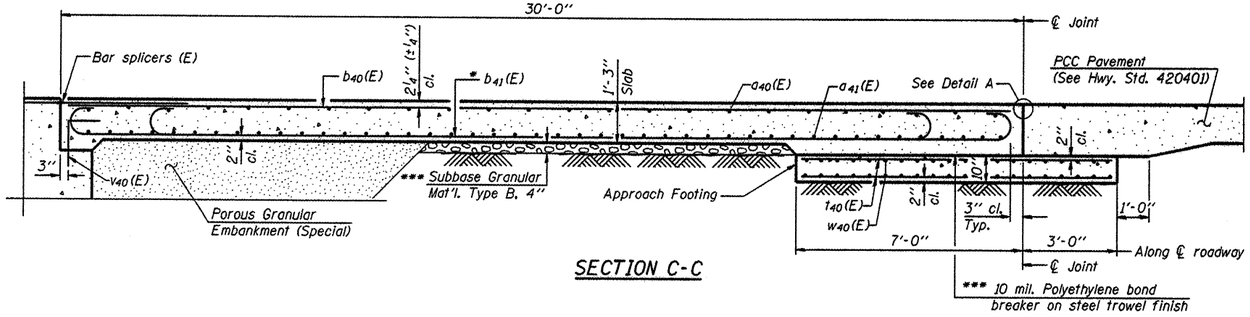

SECTION C-C

Notes:
See sheet 19 of 79 for Detail A and Section F-F.
Approach slab and parapet concrete shall be paid for as Concrete Superstructure.
Approach footing concrete shall be paid for as Concrete Structures.
Reinforcement shall be paid for as Reinforcement Bars, Epoxy Coated.
For v40(E) bar details, see sheet 67 of 79.
The approach footing maximum applied service bearing pressure (Qmax) = 2.0 ksf.
For bar splicer details, see sheet 76 of 79.
Cost of excavation for approach footing included with Concrete Structures.
For Porous Granular Embankment (Special) and drainage treatment details, see sheet 2 of 79 .
For additional parapet details, see sheet 13 of 79.

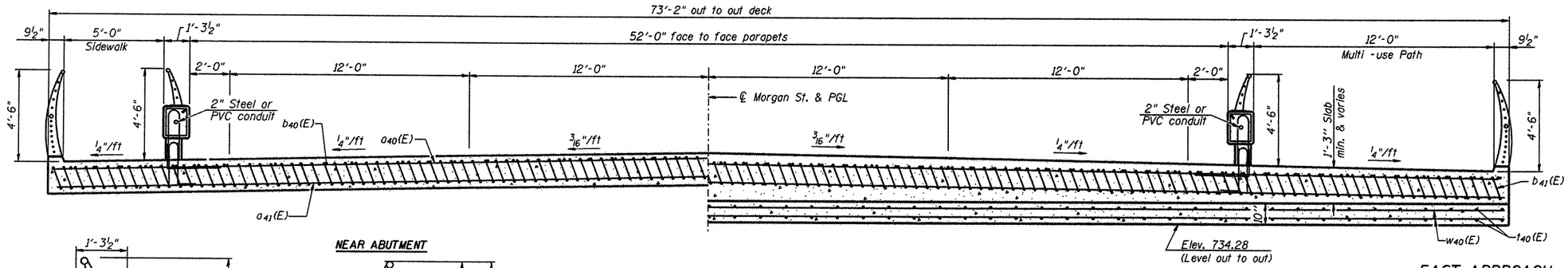

EAST APPROACH

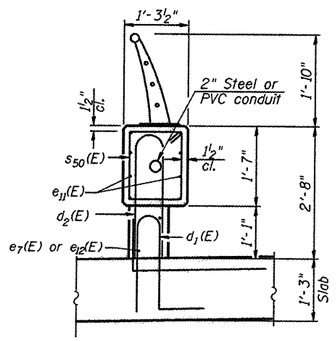

SECTION THRU
NORTH PARAPET

NEAR ABUTMENT

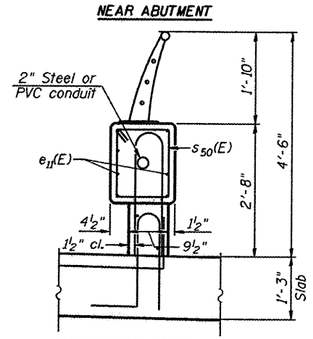

SECTION THRU
SOUTH PARAPET

SECTION D-D
(See Plan for dimensions not shown)

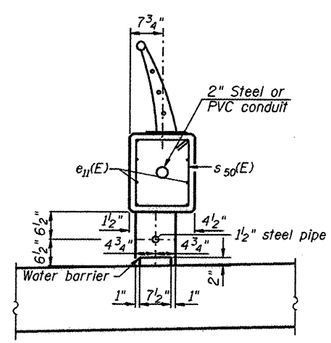

SECTION THRU
PARAPET AT OPENING

AT APPROACH FOOTING

* Tilt #9 b_{41}(E), #9 b_{42}(E), and #9 b_{43}(E) bars as required to maintain clearance.
*** Cost included with Concrete Superstructure.

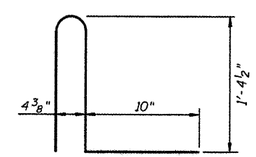

BAR d_1(E)

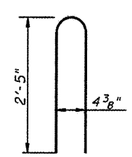

BAR d_2(E)

MIN. BAR LAP
#4 bar = 2'-7"
#5 bar = 3'-3"

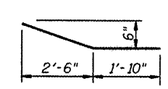

BAR e_{14}(E)

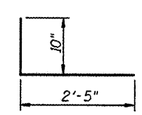

BAR d(E)

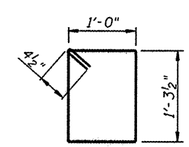

BAR s_{50}(E)

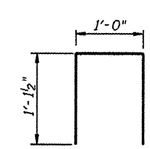

BAR s_{51}(E)

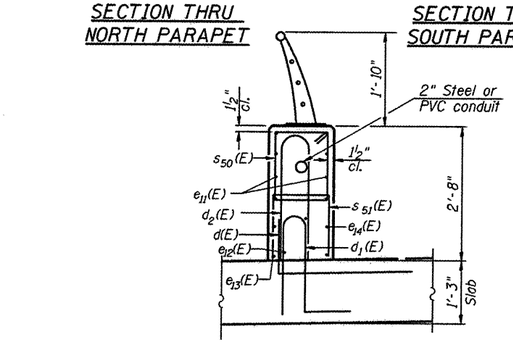

SECTION F-F

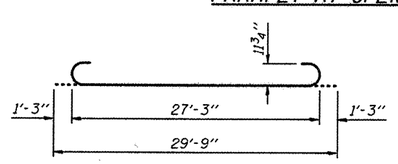

BAR b_{41}(E)

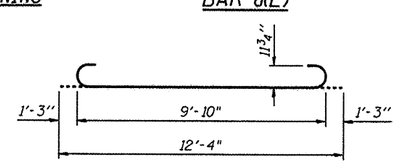

BAR b_{42}(E)

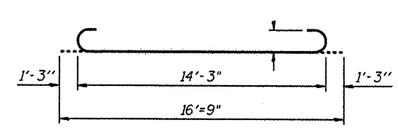

BAR b_{43}(E)

EAST APPROACH
BILL OF MATERIAL

Bar	No.	Size	Length	Shape
a40(E)	50	#4	37'-11"	
a41(E)	92	#5	38'-3"	
b40(E)	59	#4	29'-8"	
b41(E)	154	#9	29'-9"	
b42(E)	21	#9	12'-4"	
b43(E)	21	#9	16'-9"	
b44(E)	16	#9	12'-9"	
d(E)	120	#5	3'-3"	
d1(E)	120	#5	3'-9½"	
d2(E)	120	#5	5'-0½"	
e11(E)	16	#5	31'-2"	
e12(E)	8	#5	7'-6"	
e7(E)	4	#5	3'-9"	
e13(E)	4	#5	1'-9"	
e14(E)	4	#5	5'-5"	
s50(E)	126	#4	5'-4"	
s51(E)	8	#4	3'-3"	
t40(E)	148	#4	9'-8"	
w40(E)	80	#5	38'-3"	
Concrete Superstructure			Cu. Yd.	115.8
Concrete Structures			Cu. Yd.	22.7
Reinforcement Bars, Epoxy Coated			Pound	31,210
Bridge Deck Grooving			Sq. Yd.	164.0
Protective Coat			Sq. Yd.	257.0

CMT ©Copyright CMT, Inc.
CRAWFORD, MURPHY & TILLY, INC.
CONSULTING ENGINEERS
License No. 184-000613

HNTB

DESIGNED - PA, JDJ, BPD, CJW	REVISED -		
DRAWN - GLD	REVISED -		
CHECKED - RJK	REVISED -		
DATE - 02/04/2011	REVISED -		

CITY OF ROCKFORD
MORGAN STREET BRIDGE

EAST BRIDGE APPROACH SLAB DETAILS - II
STRUCTURE NO. 101-6108

SCALE: | SHEET NO. 20 OF 79 SHEETS | STA. 47+00.74 TO STA. 52+63.50

F.A.U. RTE.	SECTION	COUNTY	TOTAL SHEETS	SHEET NO.
5077	99-00493-00-BR	WINNEBAGO	253	146

CONTRACT NO. 85529

FED. ROAD DIST. NO. 2 | ILLINOIS | FED. AID PROJECT BRM-5099(65)

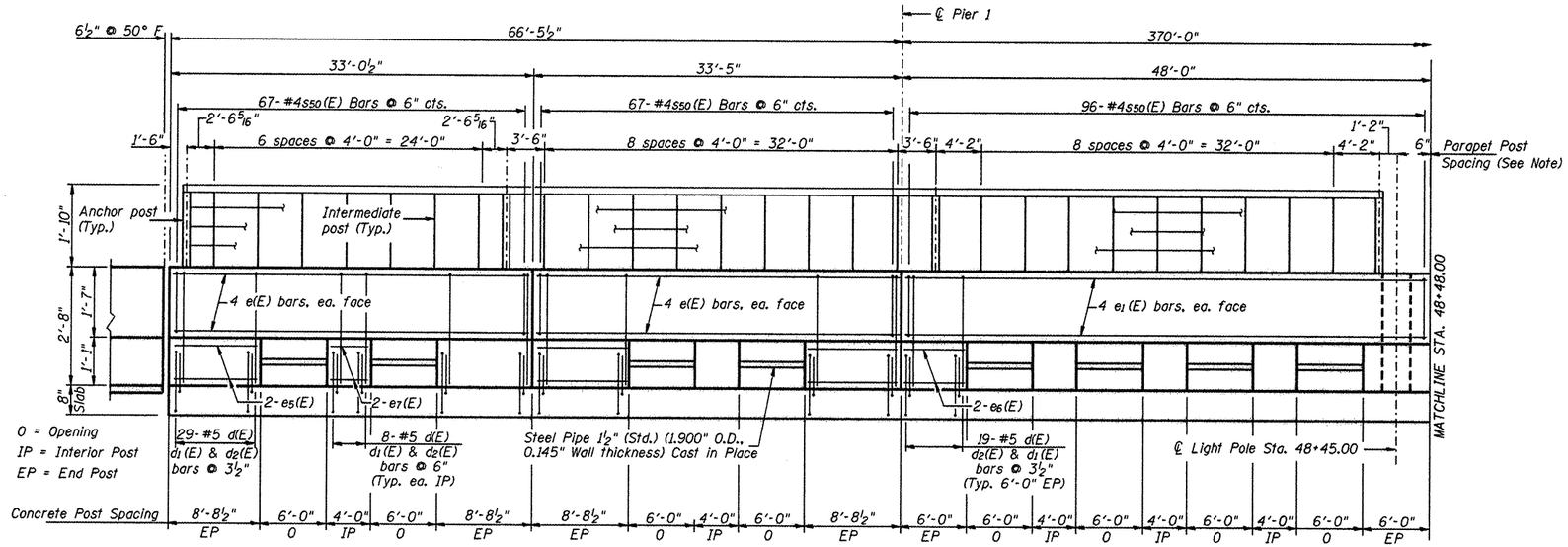

NORTH PARAPET ELEVATION-I
(Looking at Front Face)

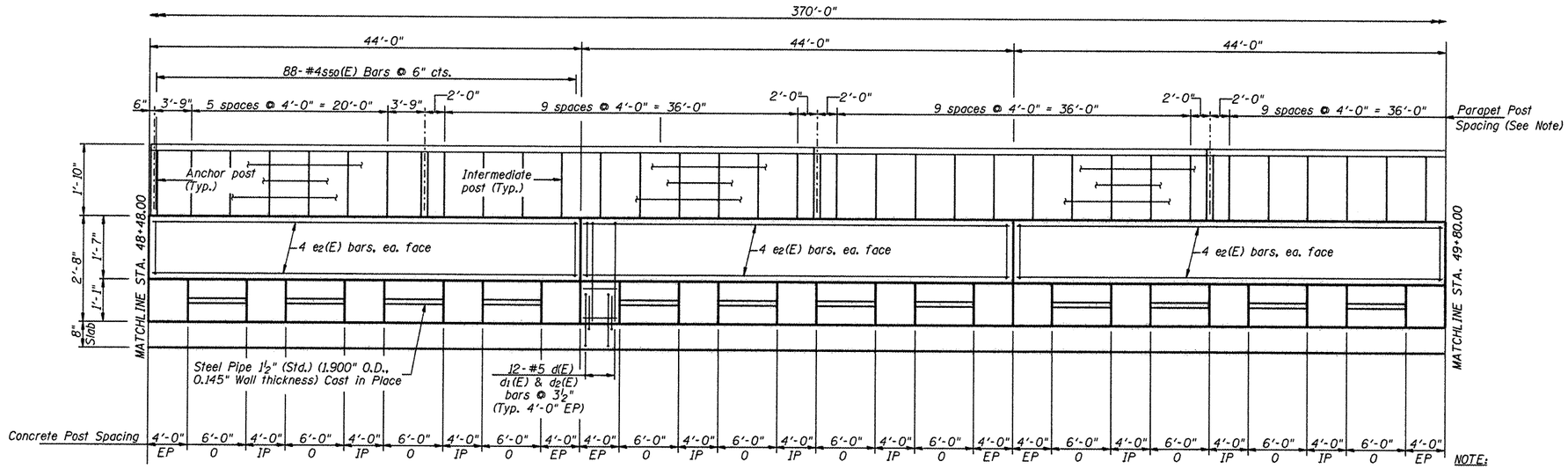

NORTH PARAPET ELEVATION-II
(Looking at Front Face)

NOTE:
Pedestrian Rail Post Spacing shall be the same as the Parapet Rail Post Spacing, U.N.O.

L:\ROCKFORD\0826892\Dgn\CA00_Sheets\S.21_North Parapet Details 1.dgn

CMT ©Copyright CMT, Inc.
CRAWFORD, MURPHY & TILLY, INC.
CONSULTING ENGINEERS
License No. 184-000613

HNTB

DESIGNED	- PA, JDJ, BPD, CJW	REVISED	-
DRAWN	- GLD	REVISED	-
CHECKED	- RJK	REVISED	-
DATE	- 02/04/2011	REVISED	-

CITY OF ROCKFORD
MORGAN STREET BRIDGE

NORTH PARAPET DETAILS - I
STRUCTURE NO. 101-6108

SCALE: | SHEET NO. 21 OF 79 SHEETS | STA. 47+00.74 TO STA. 52+63.50

F.A.U. RTE.	SECTION	COUNTY	TOTAL SHEETS	SHEET NO.
5077	99-00493-00-BR	WINNEBAGO	253	147

CONTRACT NO. 85529

FED. ROAD DIST. NO. 2 | ILLINOIS | FED. AID PROJECT BRM-5099(165)

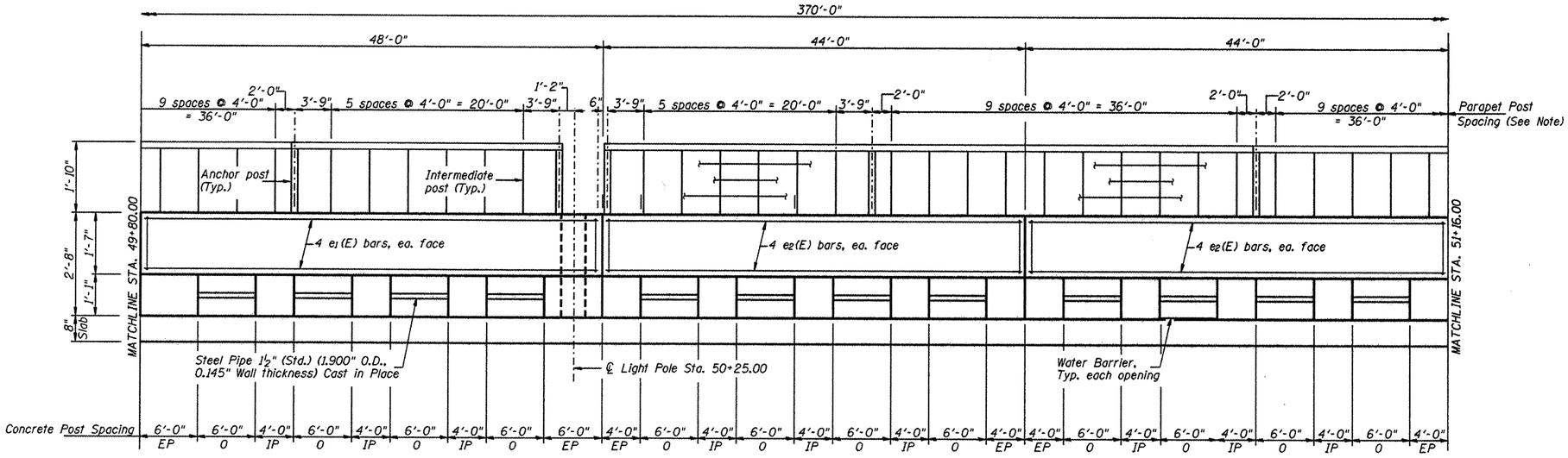

NORTH PARAPET ELEVATION-III
(Looking at Front Face)

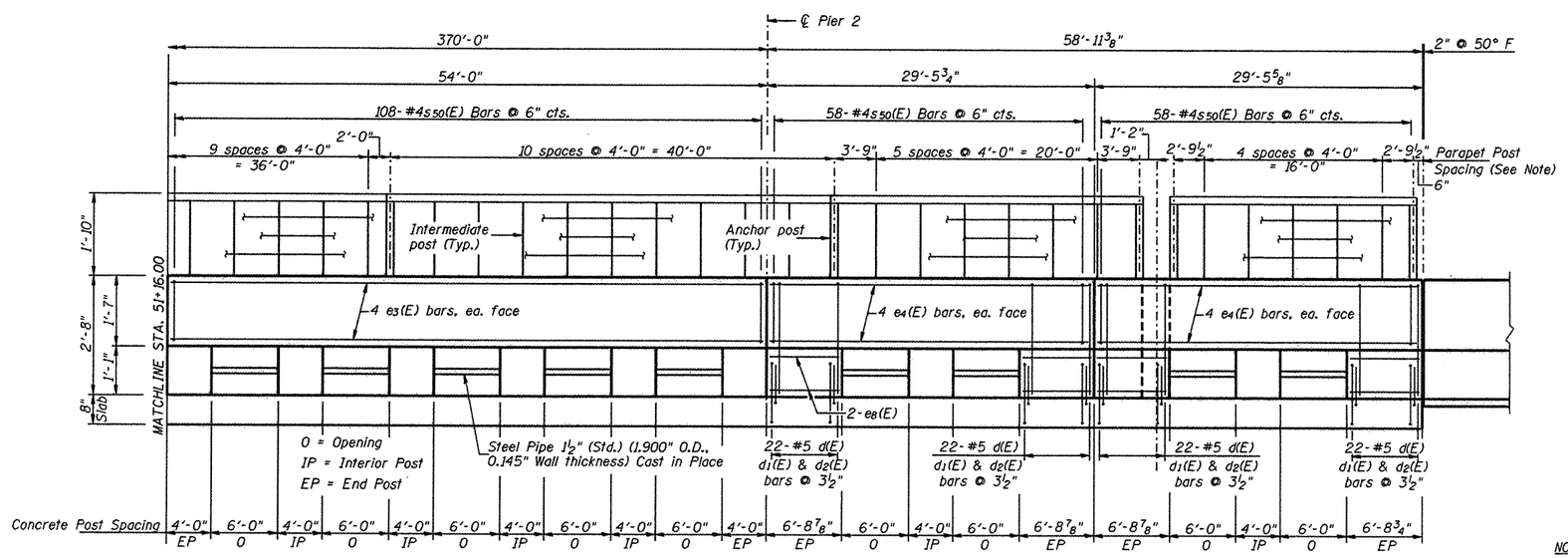

NORTH PARAPET ELEVATION-IV
(Looking at Front Face)

NOTE:
Pedestrian Rail Post Spacing shall be the same as the Parapet Rail Post Spacing, U.N.O.

CMT ©Copyright CMT, Inc. CRAWFORD, MURPHY & TILLY, INC. CONSULTING ENGINEERS License No. 184-000613	HNTB	DESIGNED - PA, JDJ, BPD, CJW	REVISED -	CITY OF ROCKFORD MORGAN STREET BRIDGE	NORTH PARAPET DETAILS – II STRUCTURE NO. 101-6108	F.A.U. RTE.	SECTION	COUNTY	TOTAL SHEETS / SHEET NO.
		DRAWN - GLD	REVISED -			5077	99-00493-00-BR	WINNEBAGO	253 / 147A
		CHECKED - RJK	REVISED -					CONTRACT NO. 85529	
		DATE - 02/04/2011	REVISED -		SCALE: / SHEET NO. 21A OF 79 SHEETS / STA. 47+00.74 TO STA. 52+63.50	FED. ROAD DIST. NO. 2	ILLINOIS	FED. AID PROJECT BRM-5099(65)	

I:\rockford\d0826982\dwg\cadd_sheets\S.21A.North Parapet Details.dgn

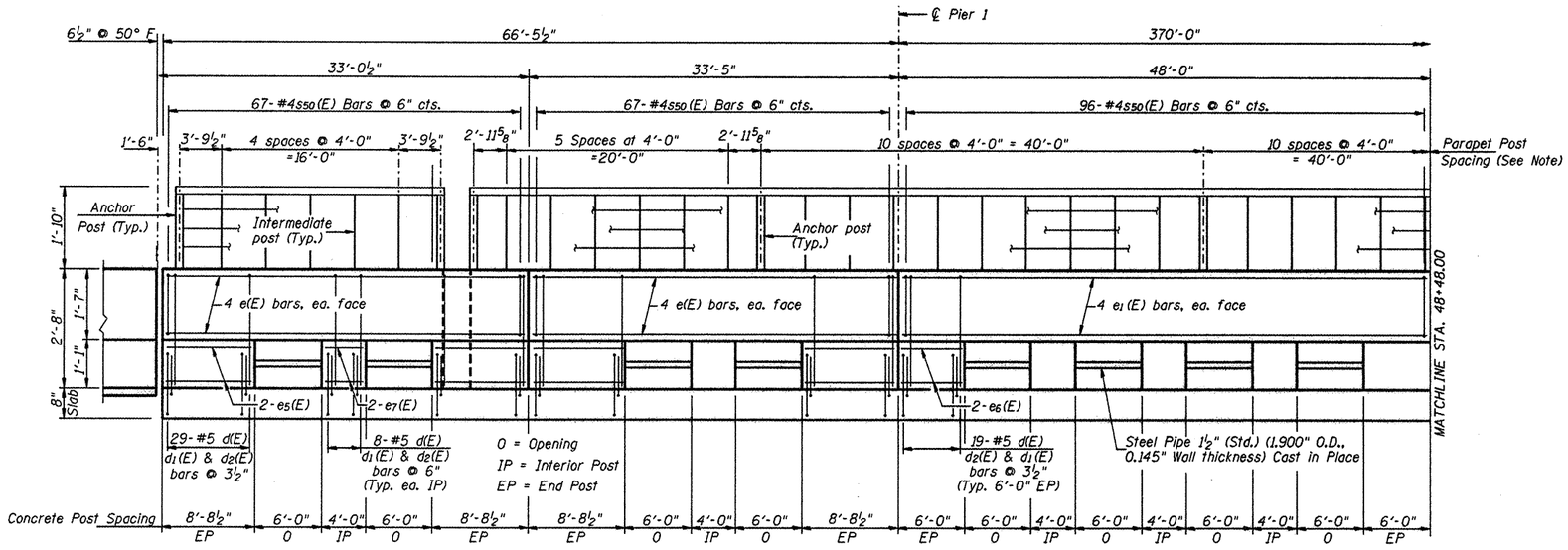

SOUTH PARAPET ELEVATION-I
(Looking at Back Face)

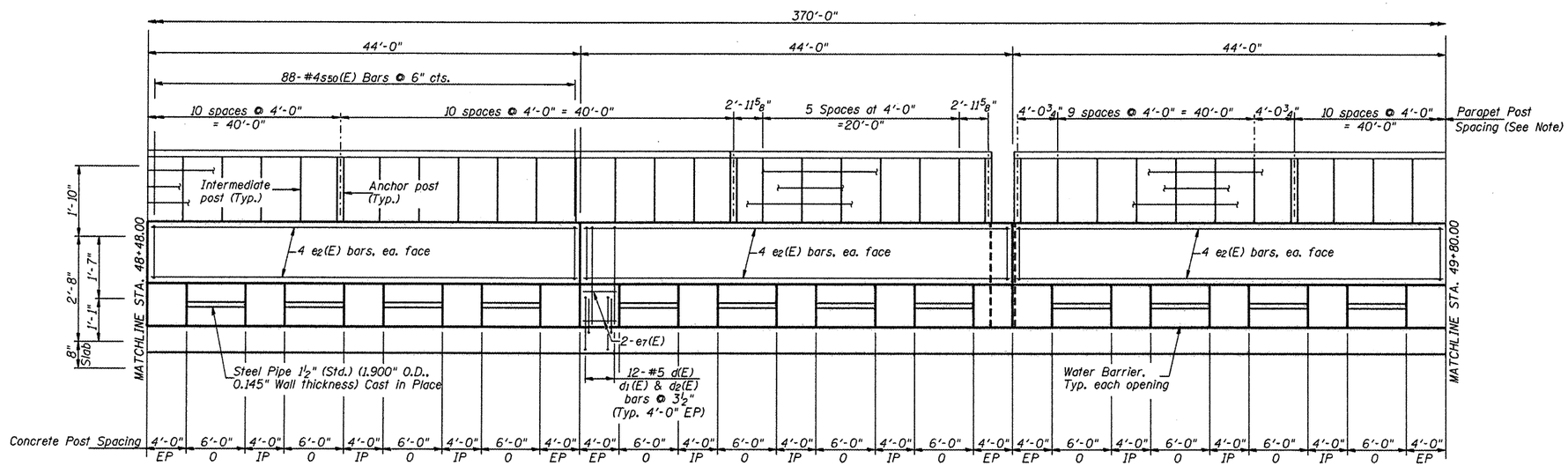

SOUTH PARAPET ELEVATION-II
(Looking at Back Face)

NOTE:
Pedestrian Rail Post Spacing shall be the same as the Parapet Rail Post Spacing, U.N.O.

L:\ROCKFORD\08269182\Dgn\C400.Sheets\S.23.South Parapet Details 1.dgn

CMT ©Copyright CMT, Inc.
CRAWFORD, MURPHY & TILLY, INC.
CONSULTING ENGINEERS
License No. 184-000613

HNTB

DESIGNED - PA, JDJ, BPD, CJW	REVISED -		
DRAWN - GLD	REVISED -		
CHECKED - RJK	REVISED -		
DATE - 02/04/2011	REVISED -		

CITY OF ROCKFORD
MORGAN STREET BRIDGE

SOUTH PARAPET DETAILS - I
STRUCTURE NO. 101-6108

SCALE: | SHEET NO. 22 OF 79 SHEETS | STA. 47+00.74 TO STA. 52+63.50

F.A.U. RTE.	SECTION	COUNTY	TOTAL SHEETS	SHEET NO.
5077	99-00493-00-BR	WINNEBAGO	253	148
		CONTRACT NO. 85529		

FED. ROAD DIST. NO. 2 | ILLINOIS | FED. AID PROJECT BRM-5099(65)

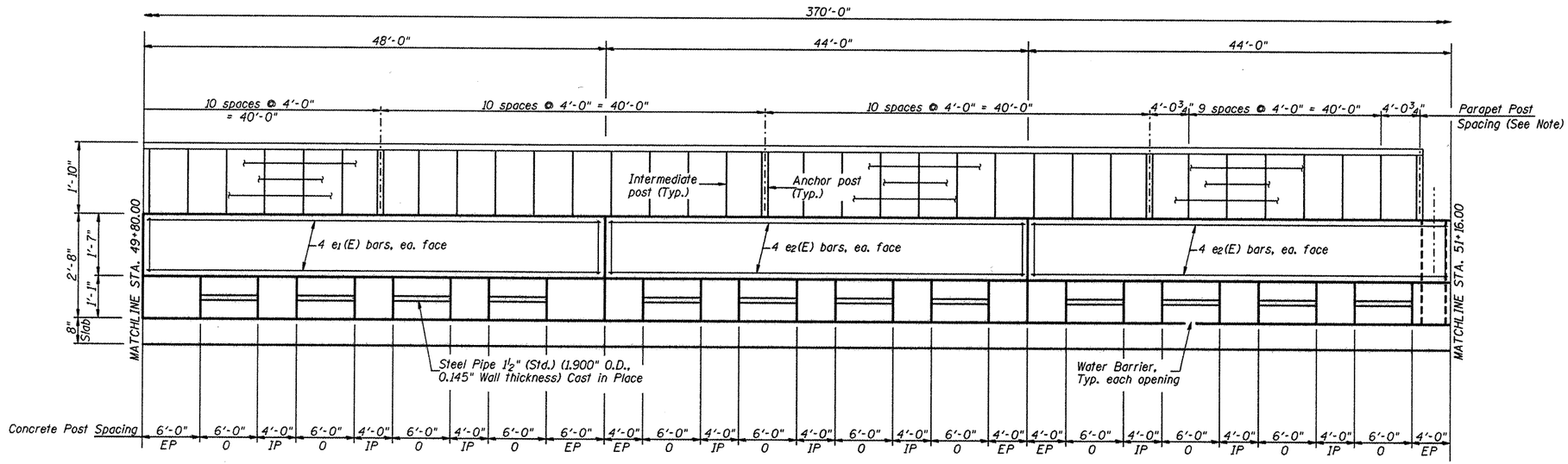

SOUTH PARAPET ELEVATION-III

(Looking at Back Face)

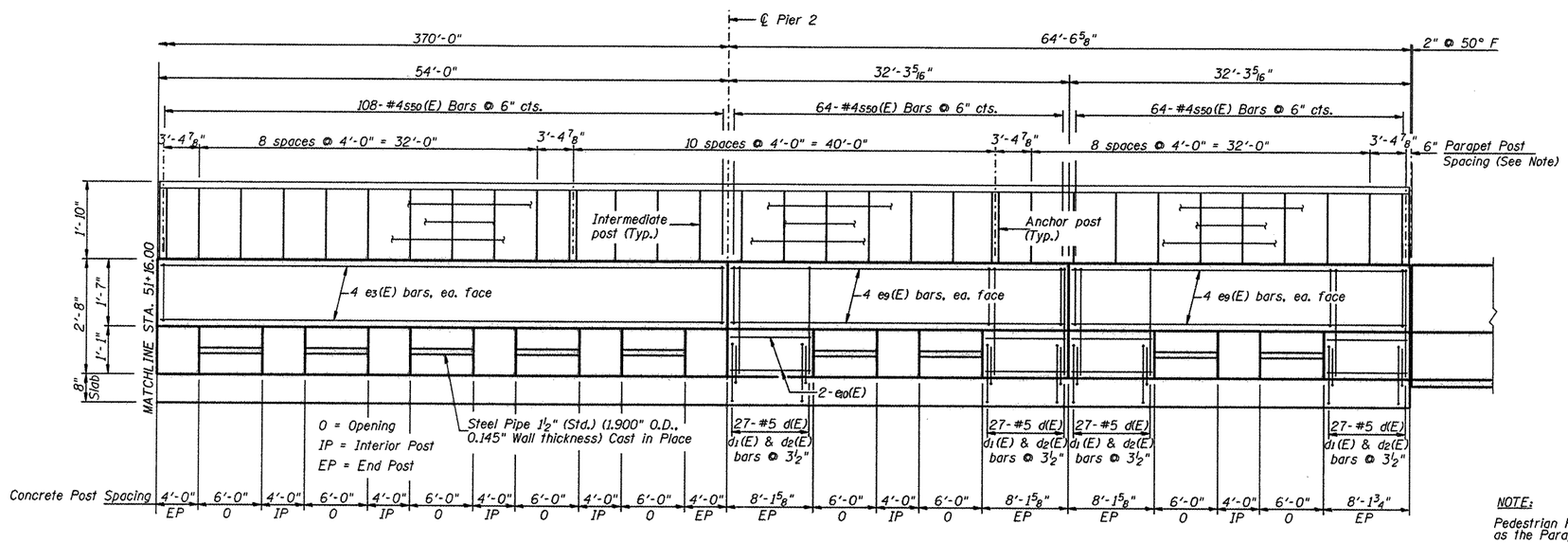

SOUTH PARAPET ELEVATION-IV

(Looking at Back Face)

NOTE:

Pedestrian Rail Post Spacing shall be the same as the Parapet Rail Post Spacing, U.N.O.

1484

CMT ©Copyright CMT, Inc. CRAWFORD, MURPHY & TILLY, INC. CONSULTING ENGINEERS License No. 184-000613	HNTB	DESIGNED - PA, JDJ, BPD, CJW	REVISED -
		DRAWN - GLD	REVISED -
		CHECKED - RJK	REVISED -
		DATE - 02/04/2011	REVISED -

CITY OF ROCKFORD
MORGAN STREET BRIDGE

SOUTH PARAPET DETAILS – II
STRUCTURE NO. 101-6108

SCALE: | SHEET NO. 22A OF 79 SHEETS | STA. 47+00.74 TO STA. 52+63.50

F.A.U. RTE.	SECTION	COUNTY	TOTAL SHEETS	SHEET NO.
5077	99-00493-00-BR	WINNEBAGO	253	148A
		CONTRACT NO. 85529		

FED. ROAD DIST. NO. 2 | ILLINOIS | FED. AID PROJECT BRM-5099(65)

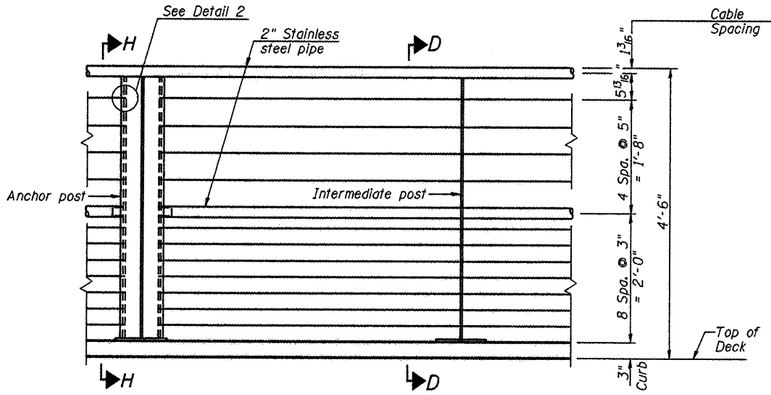

PEDESTRIAN RAILING ELEVATION

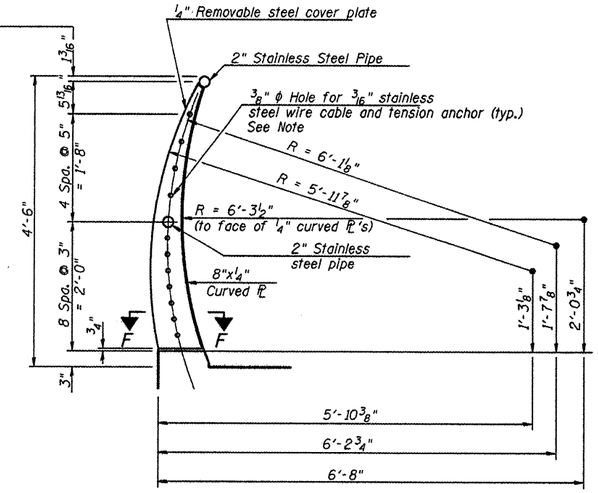

SECTION H-H
PEDESTRIAN RAIL ANCHOR POST

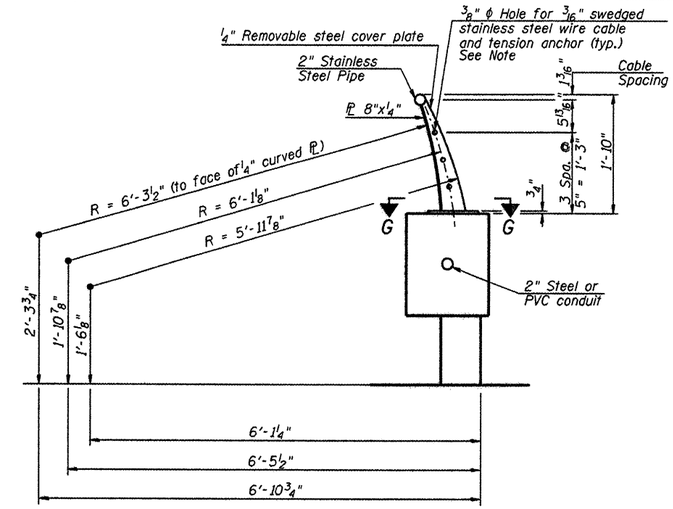

SECTION I-I

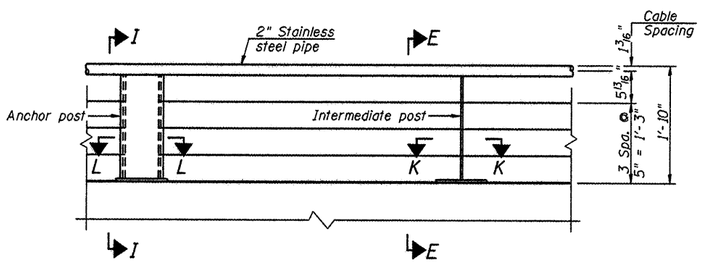

PARAPET RAILING ELEVATION

NOTE:
Offset holes for cables in anchor posts to allow for proper installation of wire cable tension anchors.

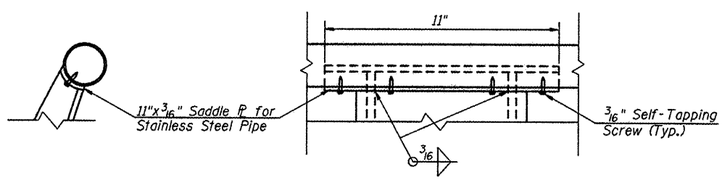

ANCHOR POST SADDLE DETAIL

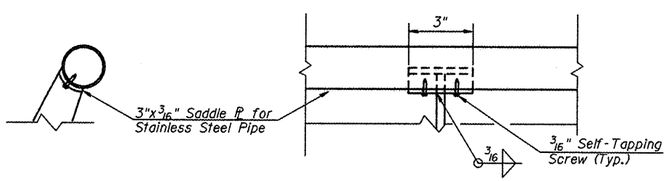

INTERMEDIATE POST SADDLE DETAIL

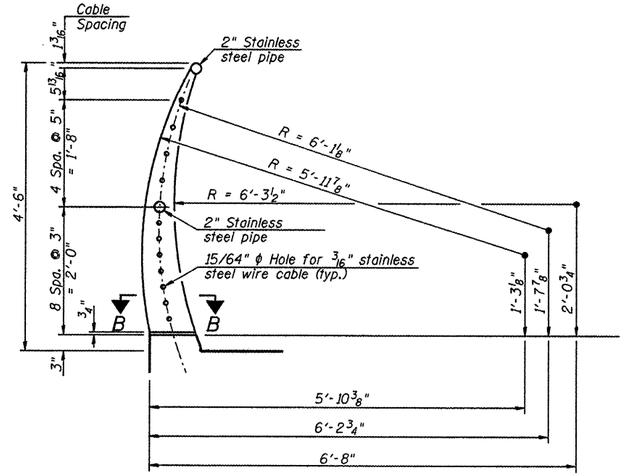

SECTION D-D
PEDESTRIAN RAIL INTERMEDIATE POST

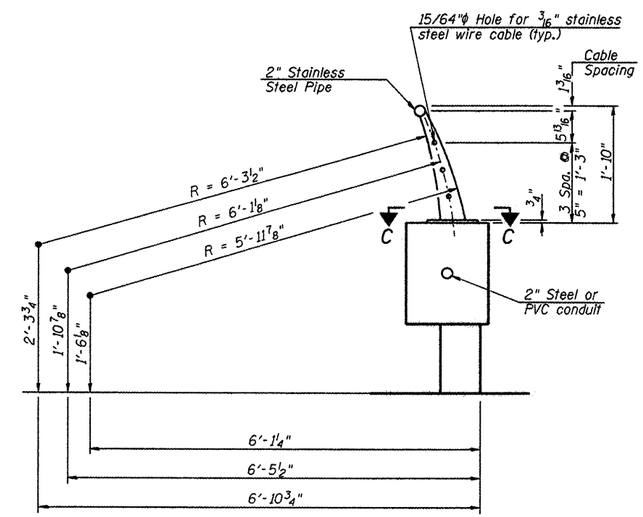

SECTION E-E

NOTES:
1. Work this sheet with Sheet 23A.
2. For rail post spacing, see sheets 17, 19 & 21 thru 22A.

L:\ROCKFORD\0592686\Ds-n\CADD_Sheets\S-23_Railing Detail.dgn

CMT ©Copyright CMT, Inc.
CRAWFORD, MURPHY & TILLY, INC.
CONSULTING ENGINEERS
License No. 184-000613

HNTB

DESIGNED - PA, JDJ, BPD, CJW	REVISED -		
DRAWN - GLD	REVISED -		
CHECKED - RJK	REVISED -		
DATE - 02/04/2011	REVISED -		

CITY OF ROCKFORD
MORGAN STREET BRIDGE

RAILING DETAILS
STRUCTURE NO. 101-6108

SCALE: | SHEET NO. 23 OF 79 SHEETS | STA. 47+00.74 TO STA. 52+63.50

F.A.U. RTE.	SECTION	COUNTY	TOTAL SHEETS	SHEET NO.
5077	99-00493-00-BR	WINNEBAGO	253	149
		CONTRACT NO. 85529		

FED. ROAD DIST. NO. 2 | ILLINOIS | FED. AID PROJECT BRM-5099(65)

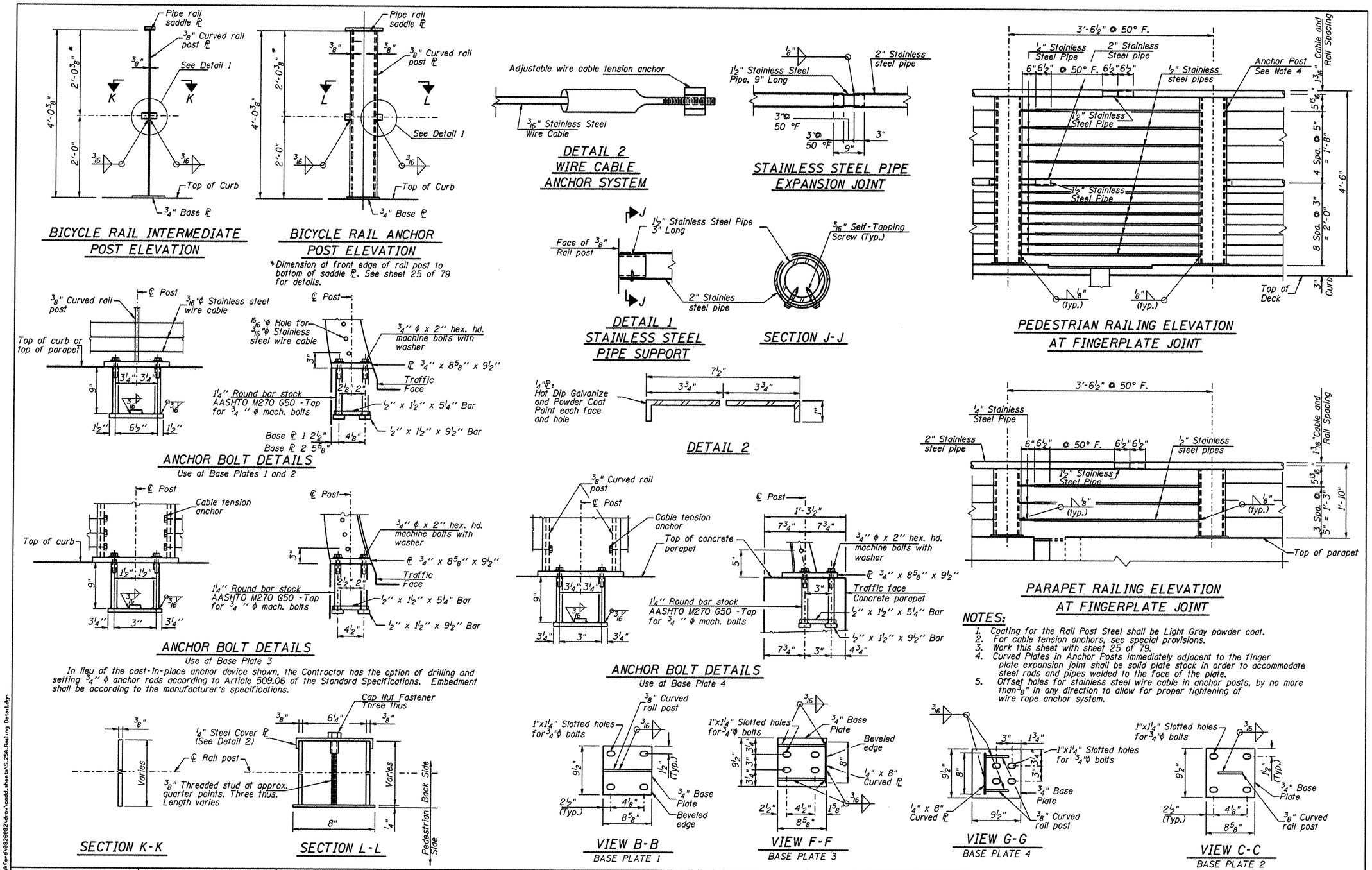

NOTES:

1. Coating for the Rail Post Steel shall be Light Gray powder coat.
2. For cable tension anchors, see special provisions.
3. Work this sheet with sheet 25 of 79.
4. Curved Plates in Anchor Posts immediately adjacent to the finger plate expansion joint shall be solid plate stock in order to accommodate steel rods and pipes welded to the face of the plate.
5. Offset holes for stainless steel wire cable in anchor posts, by no more than 3/8" in any direction to allow for proper tightening of wire rope anchor system.

149a

v:\0bsurv\cadd for-0\0825882\dgn\cadd_sheets\S_254_Railing Details.dgn

CMT CRAWFORD, MURPHY & TILLY, INC. CONSULTING ENGINEERS License No. 184-000613 ©Copyright CMT, Inc.

HNTB

DESIGNED - PA, JDJ, BPD, CJW	REVISED -		
DRAWN - GLD	REVISED -		
CHECKED - RJK	REVISED -		
DATE - 02/04/2011	REVISED -		

CITY OF ROCKFORD
MORGAN STREET BRIDGE

RAILING DETAILS – II
STRUCTURE NO. 101-6108

SCALE: | SHEET NO. 23A OF 79 SHEETS | STA. 47+00.74 TO STA. 52+63.50

F.A.U. RTE.	SECTION	COUNTY	TOTAL SHEETS	SHEET NO.
5077	99-00493-00-BR	WINNEBAGO	253	149A
		CONTRACT NO. 85529		

FED. ROAD DIST. NO. 2 | ILLINOIS | FED. AID PROJECT BRM-5099(65)

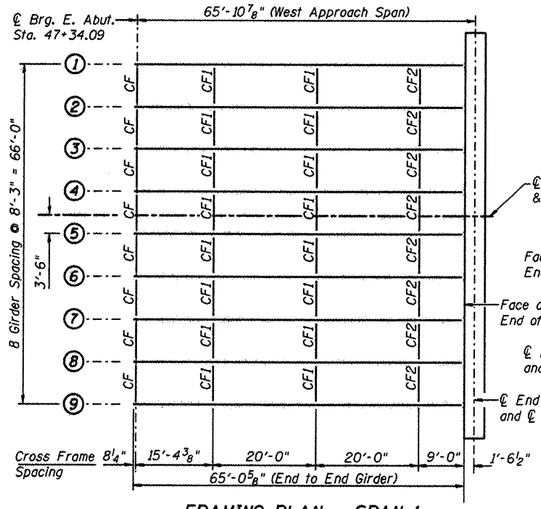

FRAMING PLAN - SPAN 1

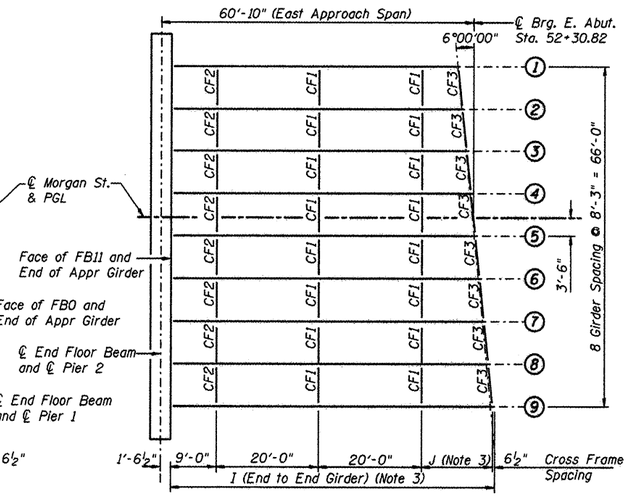

FRAMING PLAN - SPAN 3

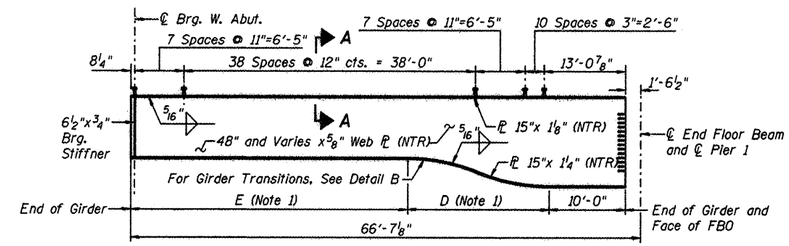

GIRDER ELEVATION - SPAN 1

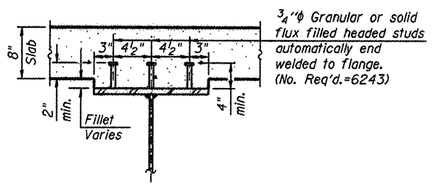

SECTION A-A

Notes:

1. For Detail B and Table of Girder Depth Transition Dimensions, See Sheet 25 of 79 .
2. For girder to floor beam connection details, see sheet 54 of 79.
3. For Span 3 Dimensions, See table, this sheet.

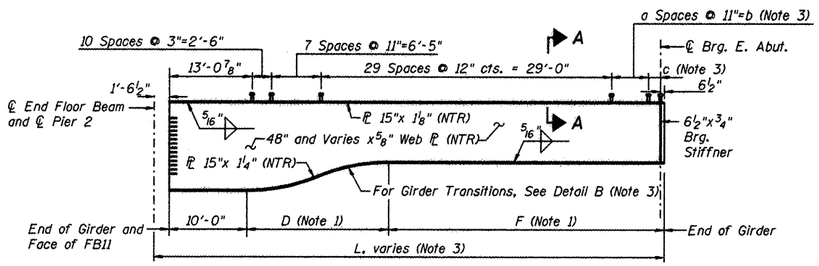

GIRDER ELEVATION - SPAN 3

SPAN 3 GIRDER DIMENSIONS						
Girder	I	J	L	a	b	c
1	56'-8 3/4"	7'-8 3/4"	58'-3 1/4"	7	6'-3"	9 7/8"
2	58'-7 1/8"	8'-7 1/8"	59'-1 5/8"	8	7'-4"	9 1/4"
3	58'-5 1/2"	9'-5 1/2"	60'-0"	9	8'-3"	8 5/8"
4	59'-3 7/8"	10'-3 7/8"	60'-10 3/8"	10	9'-2"	8"
5	60'-2 3/8"	11'-2 3/8"	61'-8 7/8"	11	10'-1"	7 1/2"
6	61'-0 3/4"	12'-0 3/4"	62'-7 1/4"	11	10'-1"	12 7/8"
7	61'-11 1/8"	12'-11 1/8"	63'-5 5/8"	13	11'-11"	6 1/4"
8	62'-9 1/2"	13'-9 1/2"	64'-4"	14	12'-10"	5 5/8"
9	63'-8"	14'-8"	65'-2 1/2"	15	13'-9"	5 1/8"

TOP OF WEB ELEVATIONS				
Girder	℄ Brg. E. Abut.	Pier 1	Pier 2	℄ Brg. W. Abut.
1	721.35	723.16	733.33	734.92
2	721.52	723.33	733.51	735.12
3	721.69	723.50	733.68	735.31
4	721.82	723.64	733.81	735.47
5	721.84	723.66	733.83	735.52
6	721.71	723.53	733.70	735.41
7	721.54	723.36	733.53	735.26
8	721.37	723.18	733.36	735.12
9	721.20	723.01	733.19	734.97

For Fabrication Only

BILL OF MATERIAL

Item	Unit	Total
Stud Shear Connectors	Each	3,264

L:\ROCKFORD\08226802\D-ew\CADD.Sheets\S_26_Framing Plan_Det_Approach.dgn

CMT ©Copyright CMT, Inc.
CRAWFORD, MURPHY & TILLY, INC.
CONSULTING ENGINEERS
License No. 184-000613

HNTB

DESIGNED - PA, JDJ, BPD, CJW	REVISED -		
DRAWN - GLD	REVISED -		
CHECKED - RJK	REVISED -		
DATE - 02/04/2011	REVISED -		

CITY OF ROCKFORD
MORGAN STREET BRIDGE

FRAMING PLAN & DETAILS - I - APPROACH SPANS
STRUCTURE NO. 101-6108

SCALE: | SHEET NO.24 OF 79 SHEETS | STA. 47+00.74 TO STA. 52+63.50

F.A.U. RTE.	SECTION	COUNTY	TOTAL SHEETS	SHEET NO.
5077	99-00493-00-BR	WINNEBAGO	253	150
		CONTRACT NO. 85529		
FED. ROAD DIST. NO. 2	ILLINOIS	FED. AID PROJECT BRM-5099(65)		

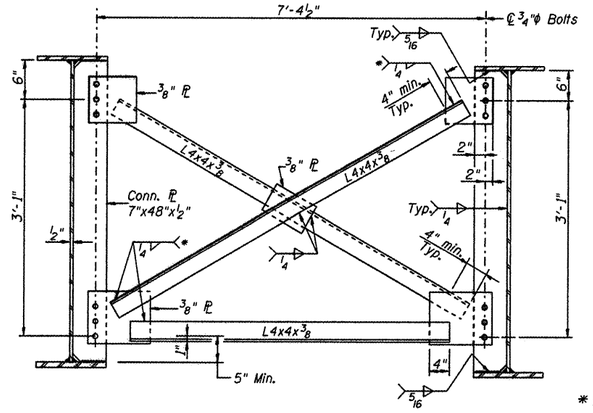

INTERIOR CROSS FRAME, CF1

(32 Required)

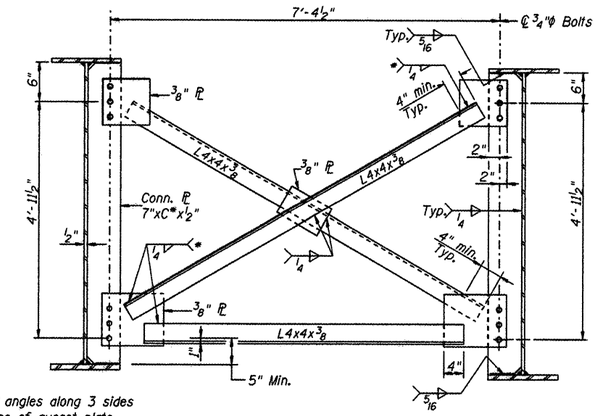

* Fillet weld angles along 3 sides on one face of gusset plate.

INTERIOR CROSS FRAME, CF2

(16 Required)

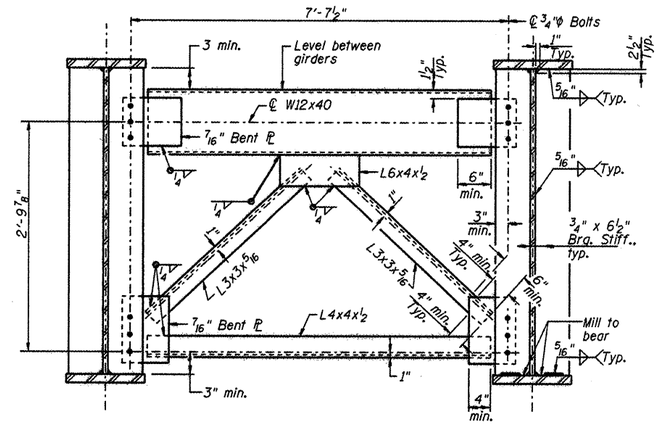

END CROSS FRAME, CF

(8 Required)

All cross frames shall be installed as steel is erected and secured with erection pins and bolts except as otherwise noted. Individual cross frames at supports may be temporarily disconnected to install bearing anchor rods.

Detail 15/16" diameter holes for all ¾" diameter bolts.

Two hardened washers required for each set of oversized holes.

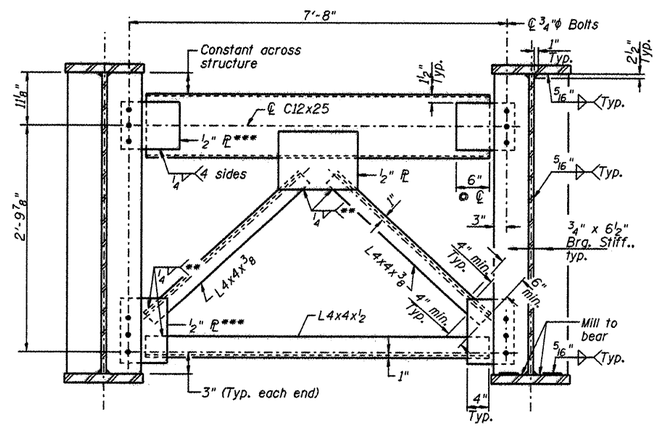

END CROSS FRAME, CF3

(8 Required)

** Weld on near side of ½" plate

*** ½" Plate to be bent

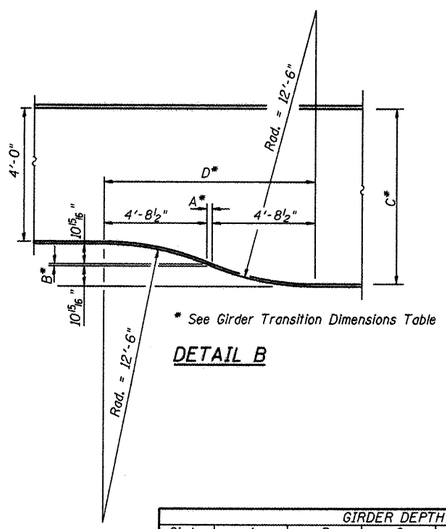

* See Girder Transition Dimensions Table

DETAIL B

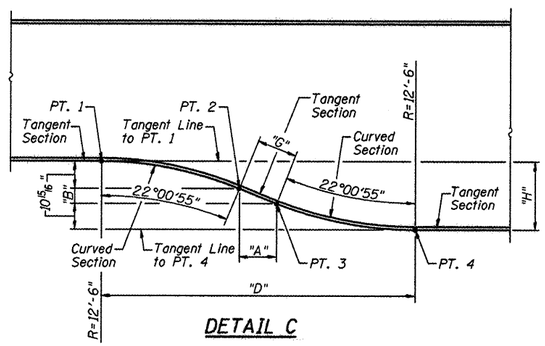

DETAIL C

GIRDER DEPTH TRANSITION DIMENSIONS

Girder	A	B	C	D	E	F	G	H
1	5 3/8"	2 13/16"	6'-0 5/16"	9'-10 3/8"	45'-2 1/4"	36'-10 3/8"	6 1/16"	2'-1/16"
2	9 3/8"	4 1/8"	6'-4 3/4"	10'-2 3/8"	44'-10 1/4"	37'-4 3/4"	10 9/16"	2'-2 3/4"
3	1'-1 15/16"	6 15/16"	6'-5 13/16"	10'-6 5/16"	44'-6 5/16"	37'-11 3/16"	15"	2'-4 13/16"
4	1'-4 7/16"	8 9/16"	6'-6 1/16"	10'-9 1/16"	44'-3 3/16"	38'-6 1/16"	18 9/16"	2'-6 1/16"
5	1'-4 13/16"	8 3/4"	6'-6 5/8"	10'-9 13/16"	44'-2 13/16"	39'-4 9/16"	18 15/16"	2'-6 5/8"
6	1'-1 15/16"	7 1/4"	6'-5 1/8"	10'-6 15/16"	44'-5 11/16"	40'-5 13/16"	15 11/16"	2'-5 1/8"
7	10"	5 3/16"	6'-3 1/16"	10'-3"	44'-9 5/8"	41'-8 1/8"	11 1/4"	2'-3 1/16"
8	4 5/16"	2 1/16"	6'-1"	9'-9 5/16"	45'-3 5/16"	43'-0 3/16"	4 15/16"	2'-5/16"
9	15/16"	3/8"	5'-10 15/16"	9'-5 15/16"	45'-6 11/16"	44'-2 1/16"	1"	1'-10 1/4"

CMT CRAWFORD, MURPHY & TILLY, INC. CONSULTING ENGINEERS License No. 184-000613 ©Copyright CMT, Inc.

HNTB

DESIGNED	- PA, JDJ, BPD, CJW	REVISED	-
DRAWN	- GLD	REVISED	-
CHECKED	- RJK	REVISED	-
DATE	- 02/04/2011	REVISED	-

CITY OF ROCKFORD
MORGAN STREET BRIDGE

FRAMING PLAN & DETAILS – II – APPROACH SPANS
STRUCTURE NO. 101-6108

SCALE: | SHEET NO.25 OF 79 SHEETS | STA. 47+00.74 TO STA. 52+63.50

F.A.U. RTE.	SECTION	COUNTY	TOTAL SHEETS	SHEET NO.
5077	99-00493-00-BR	WINNEBAGO	253	151

CONTRACT NO. 85529

FED. ROAD DIST. NO. 2 | ILLINOIS | FED. AID PROJECT BRM-5099(65)

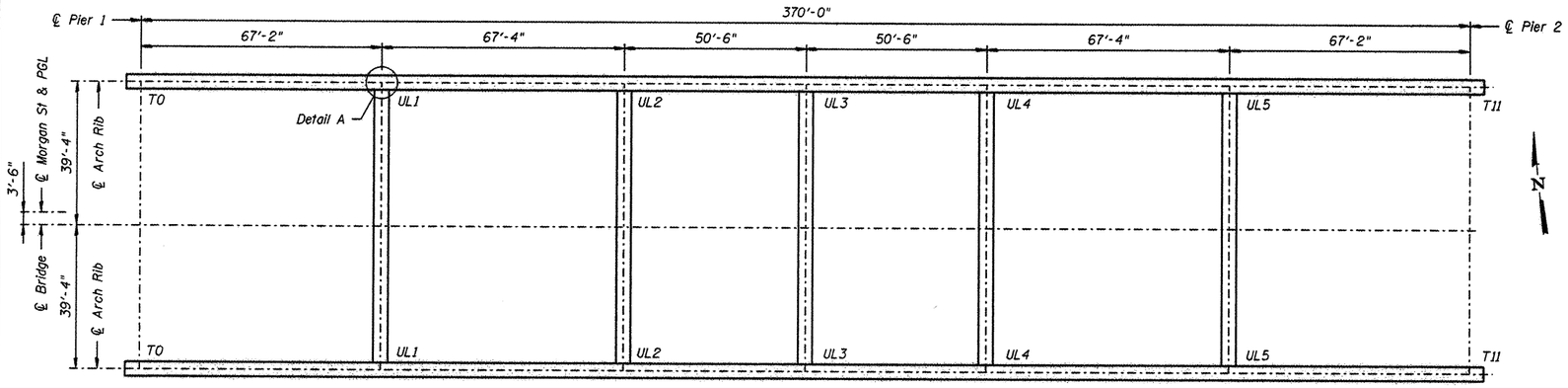

PLAN - ARCH RIB AND UPPER LATERALS

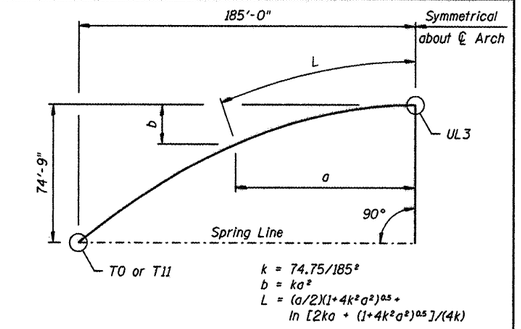

ARCH RIB GEOMETRY

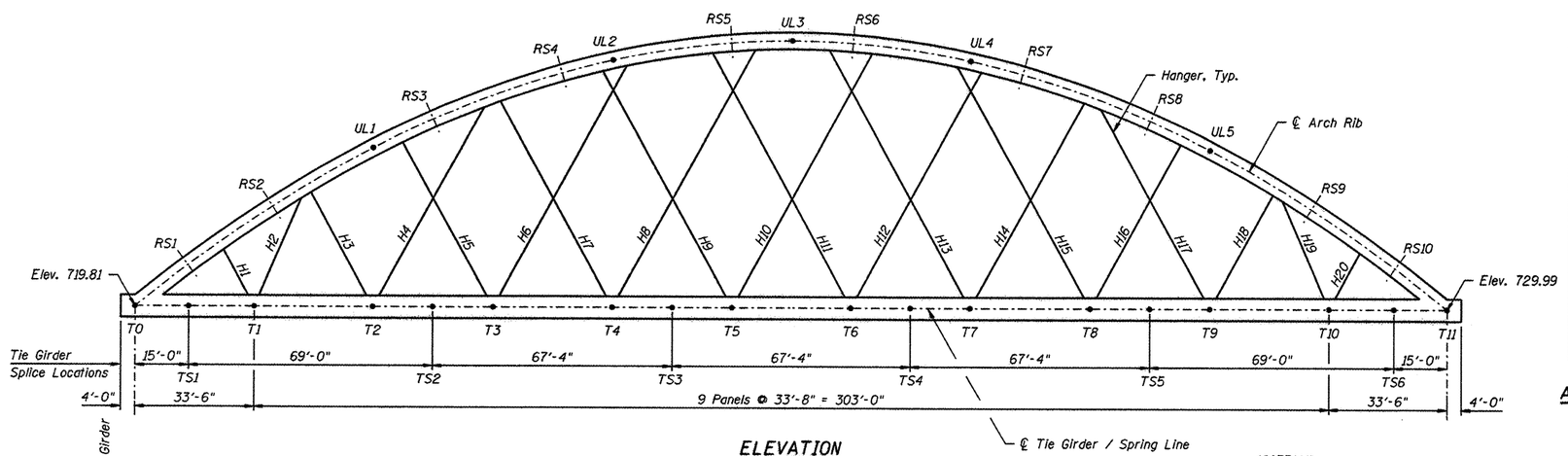

ELEVATION

Working Point	X (Feet)	Y (Feet)
UL1	67.167	44.425
UL2	134.500	69.180
UL3	185.000	74.750
UL4	235.500	69.180
UL5	302.833	44.425
T0	0.000	0.000
T1	33.500	0.000
T2	67.167	0.000
T3	100.833	0.000
T4	134.500	0.000
T5	168.167	0.000
T6	201.833	0.000
T7	235.500	0.000
T8	269.167	0.000
T9	302.833	0.000
T10	336.500	0.000
T11	370.000	0.000

ARCH WORKING POINTS

Splice Point	X (Feet)	Y (Feet)
TS1	15.000	0.000
TS2	84.000	0.000
TS3	151.333	0.000
TS4	218.667	0.000
TS5	286.000	0.000
TS6	355.000	0.000
RS1	14.726	11.427
RS2	38.588	27.931
RS3	83.955	52.450
RS4	120.011	65.525
RS5	167.771	74.102
RS6	202.229	74.102
RS7	249.989	65.525
RS8	286.045	52.450
RS9	331.412	27.931
RS10	355.274	11.427

SPLICE POINTS

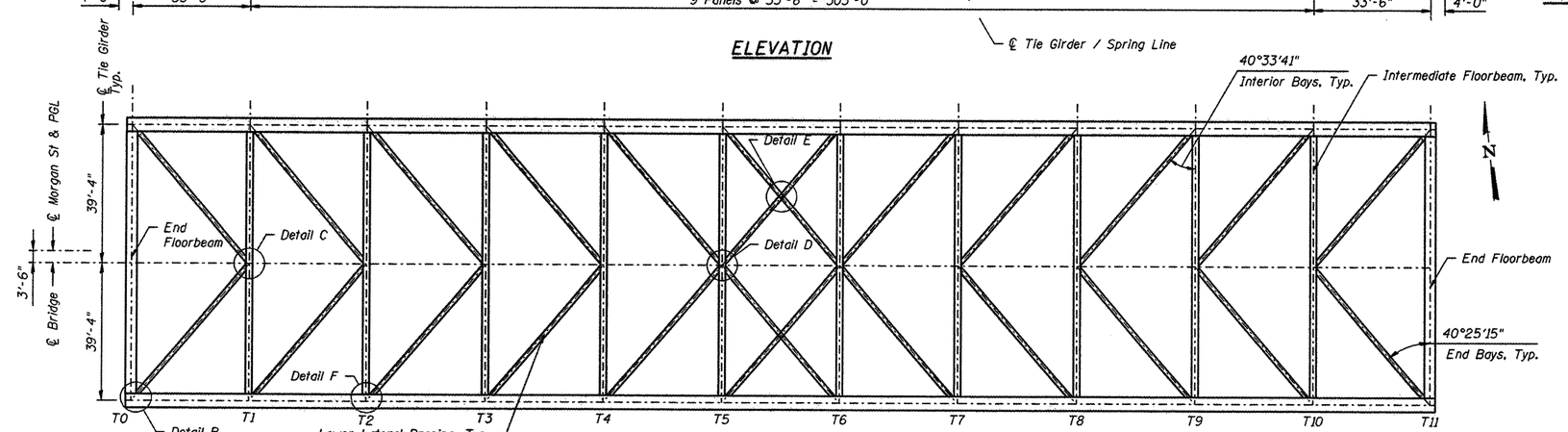

PLAN - TIE GIRDERS & LOWER LATERALS

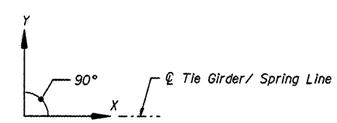

LOCAL COORDINATE SYSTEM

Notes:
The ℄ Tie Girder is parallel to profile grade.
All dimensions are along or perpendicular to spring line.
Working points use local coordinate system.
See sheet 27 of 79 for Hanger geometry.
See sheet 62 of 79 for connection Details B through F.
See sheet 40 of 79 for connection Detail A.

L:\ROCKFORD\B826882\Dgn\C400_Sheets\S_27_Tied Arch Geometry.dgn

CMT CRANFORD, MURPHY & TALLY, INC. CONSULTING ENGINEERS License No. 184-000615 ©Copyright Cmt, Inc.

HNTB

DESIGNED	- PA, JDJ, BPD, CJW	REVISED	-
DRAWN	- GLD	REVISED	-
CHECKED	- RJK	REVISED	-
DATE	- 02/04/2011	REVISED	-

CITY OF ROCKFORD
MORGAN STREET BRIDGE

TIED ARCH GEOMETRY
STRUCTURE NO. 101-6108

SCALE: | SHEET NO. 26 OF 79 SHEETS | STA. 47+00.74 TO STA. 52+63.50

F.A.U. RTE.	SECTION	COUNTY	TOTAL SHEETS	SHEET NO.
5077	99-00493-00-BR	WINNEBAGO	253	152
		CONTRACT NO. 85529		

FED. ROAD DIST. NO. 2 | ILLINOIS | FED. AID PROJECT BRM-5099(165)

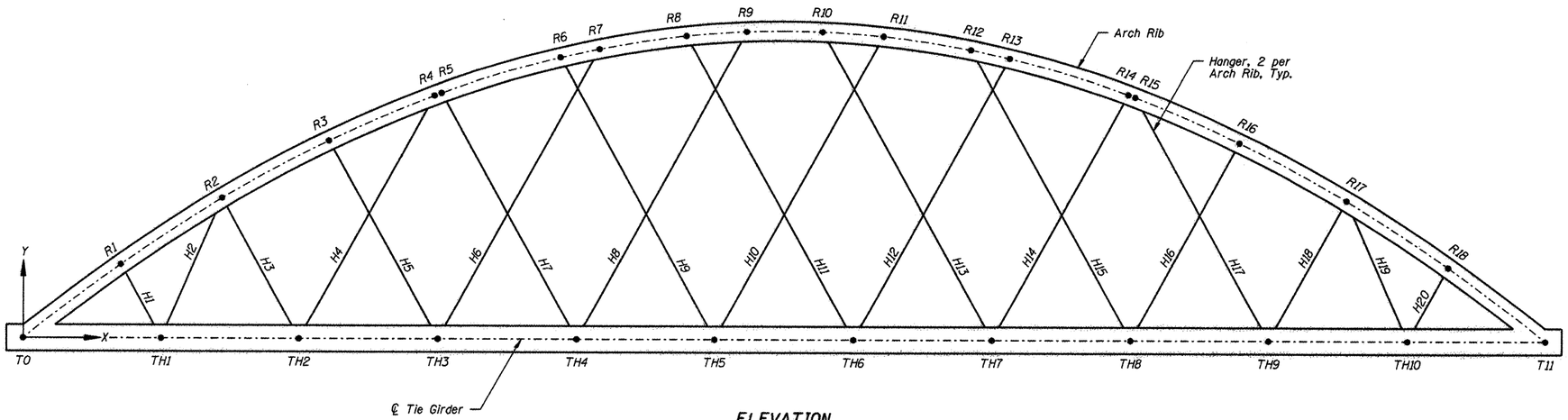

ELEVATION

Hanger	Tie Girder Work Point			Arch Rib Work Point			Lengths (ft)		Alpha
H(n)	TH(n)	X (ft)	Y (ft)	R(n)	X (ft)	Y (ft)	WP *	L **	
H1	TH1	33.500	0.000	R1	23.602	17.856	20.416	12.201	61.0
H2	TH1	33.500	0.000	R2	48.342	33.961	37.063	26.736	66.394
H3	TH2	67.167	0.000	R2	48.342	33.961	38.830	30.650	61.0
H4	TH2	67.167	0.000	R4	99.816	58.902	67.346	57.429	61.0
H5	TH3	100.833	0.000	R3	74.248	47.960	54.836	46.669	61.0
H6	TH3	100.833	0.000	R7	139.794	70.287	80.362	71.172	61.0
H7	TH4	134.500	0.000	R5	101.505	59.524	68.057	59.859	61.0
H8	TH4	134.500	0.000	R9	175.833	74.566	85.256	76.491	61.0
H9	TH5	168.167	0.000	R6	130.348	68.227	78.007	69.711	61.0
H10	TH5	168.167	0.000	R11	208.909	73.501	84.038	75.557	61.0
H11	TH6	201.833	0.000	R8	161.091	73.501	84.038	75.557	61.0
H12	TH6	201.833	0.000	R13	239.652	68.227	78.007	69.711	61.0
H13	TH7	235.500	0.000	R10	194.167	74.566	85.256	76.491	61.0
H14	TH7	235.500	0.000	R14	268.495	59.524	68.057	59.859	61.0
H15	TH8	269.167	0.000	R12	230.206	70.287	80.362	71.172	61.0
H16	TH8	269.167	0.000	R16	295.752	47.960	54.836	46.669	61.0
H17	TH9	302.833	0.000	R15	270.184	58.902	67.346	57.429	61.0
H18	TH9	302.833	0.000	R17	321.658	33.961	38.830	30.650	61.0
H19	TH10	336.500	0.000	R17	321.658	33.961	37.063	26.736	66.394
H20	TH10	336.500	0.000	R18	346.398	17.856	20.416	12.201	61.0

* WP length is straight line dimension measured from Arch Rib work point to Tie Girder work point and does not include sag.

** Length L shown is straight line dimension measured from ℄ Pin to ℄ Pin and does not include sag.

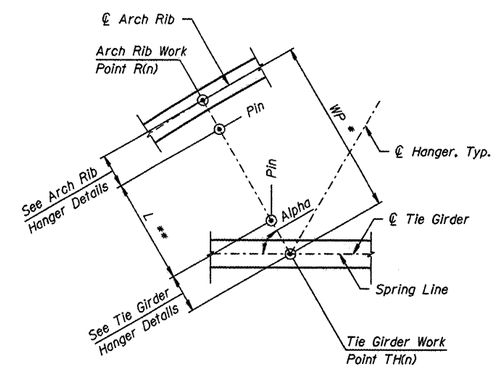

HANGER GEOMETRY

Notes:
See sheet 26 of 79 for Tied Arch Geometry.
See sheets 47 thru 50 of 79 for Hanger Details.

L:\ROCKFORD\9826982\Draw\CADD_Sheets\S.28_Hanger Work Point Detailsdgn

CMT ©Copyright CMT, Inc.
CRAWFORD, MURPHY & TILLY, INC.
CONSULTING ENGINEERS
License No. 184-000663

HNTB

DESIGNED - PA, JDJ, BPD, CJW	REVISED -		
DRAWN - GLD	REVISED -		
CHECKED - RJK	REVISED -		
DATE - 02/04/2011	REVISED -		

CITY OF ROCKFORD
MORGAN STREET BRIDGE

HANGER GEOMETRY WORK POINT DATA
STRUCTURE 101-6108

SCALE: | SHEET NO. 27 OF 79 SHEETS | STA. 47+00.74 TO STA. 52+63.50

F.A.U. RTE.	SECTION	COUNTY	TOTAL SHEETS	SHEET NO.
5077	99-00493-00-BR	WINNEBAGO	253	153
		CONTRACT NO. 85529		

FED. ROAD DIST. NO. 2 | ILLINOIS | FED. AID PROJECT BRM-5099(65)

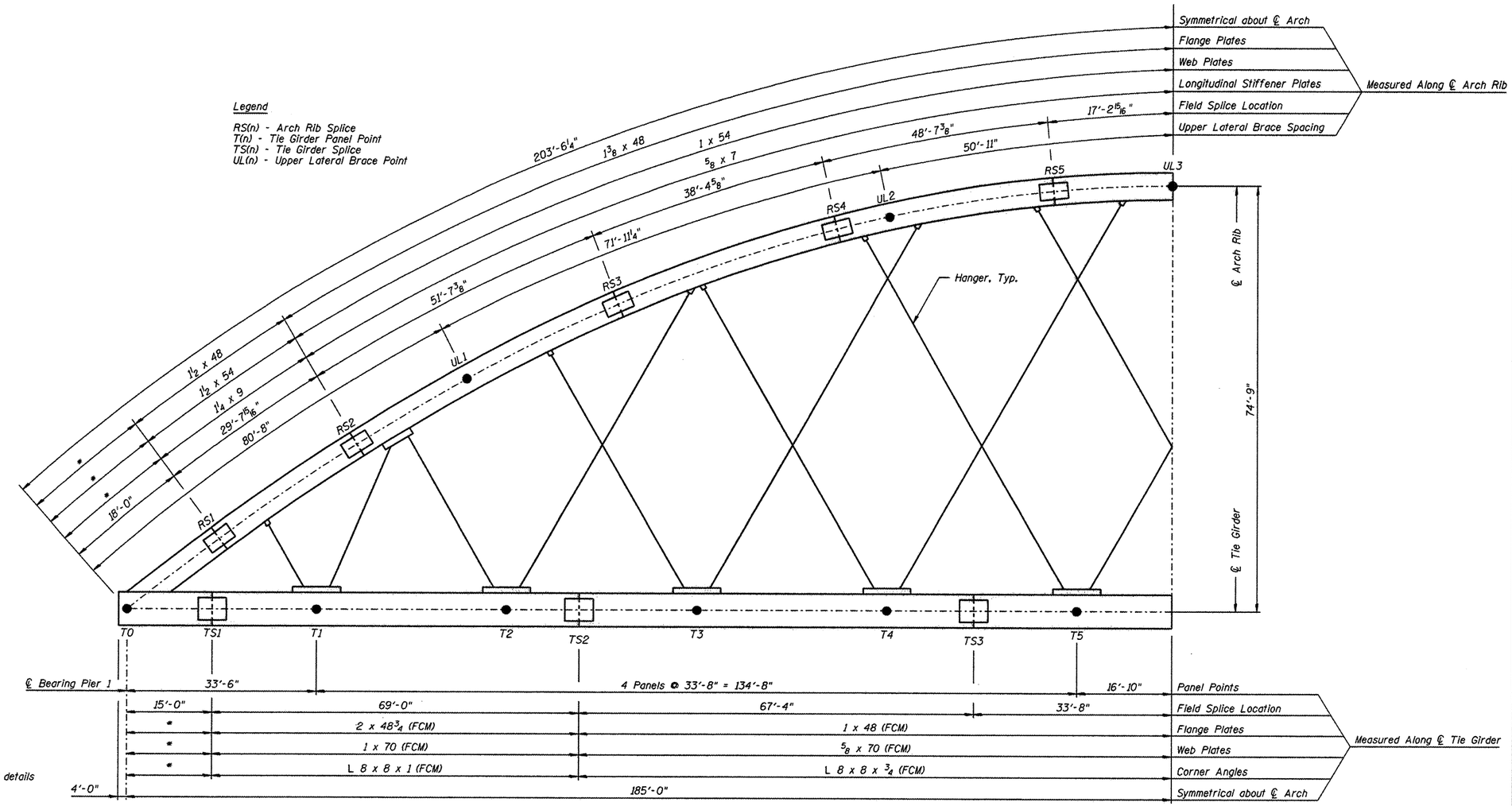

HALF ELEVATION

Notes:
See sheets 26 and 27 of 79 for Tied Arch Geometry and Hanger Work Point data.
See Sheets 30 thru 33 of 79 for Tied Arch End details.
FCM denotes Fracture Critical Member.
See sheets 41 thru 46 of 79 for Tie Girder and Tie Girder Splice details.
See sheets 34 thru 39 of 79 for Arch Rib and Arch Rib details.

L:\ROCKFORD\08208822\Draw\CADD_Sheets\S_29_Tied Arch Half Elevation.dgn

CMT ©Copyright CMT, Inc.
CRAWFORD, MURPHY & TILLY, INC.
CONSULTING ENGINEERS
License No. 184-000613

HNTB

DESIGNED - PA, JDJ, BPD, CJW	REVISED -		
DRAWN - GLD	REVISED -		
CHECKED - RJK	REVISED -		
DATE - 02/04/2011	REVISED -		

CITY OF ROCKFORD
MORGAN STREET BRIDGE

TIED ARCH HALF ELEVATION
STRUCTURE NO. 101-6108

SCALE: | SHEET NO. 28 OF 79 SHEETS | STA. 47+00.74 TO STA. 52+63.50

F.A.U. RTE.	SECTION	COUNTY	TOTAL SHEETS	SHEET NO.
5077	99-00493-00-BR	WINNEBAGO	253	154
		CONTRACT NO. 85529		

FED. ROAD DIST. NO. 2 | ILLINOIS | FED. AID PROJECT BRM-5099(65)

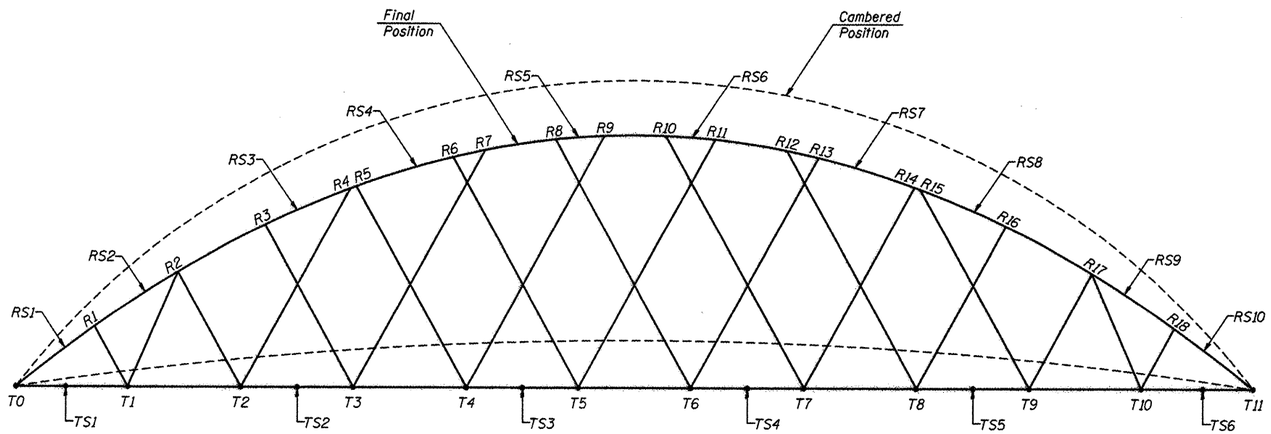

Legend
T(i): Tie Girder Panel Point along ℄ Tie Girder
TS(i): ℄ Tie Girder Splice along ℄ Tie Girder
R(i): Hanger work point along ℄ Arch Rib
RS(i): ℄ Arch Rib Splice along ℄ Arch Rib

CAMBER DIAGRAM

Work Point	TIE GIRDER CAMBER											
	Steel Only		Slab Only		Barriers		Total Camber		Final Arch Coord. (1)		Cambered Arch Coord.	
	dX (ft)	dY (ft)	dX (ft)	dY (ft)	dX (ft)	dY (ft)	dX (ft)	dY (ft)	X (ft)	Y (ft)	X (ft)	Y (ft)
T0	0.039	0.000	0.041	0.000	0.004	0.000	0.084	0.000	0.000	0.000	0.084	0.000
TS1	0.039	0.017	0.040	0.018	0.004	0.002	0.082	0.037	15.000	0.000	15.082	0.037
T1	0.037	0.037	0.038	0.041	0.003	0.005	0.079	0.084	33.500	0.000	33.579	0.084
T2	0.035	0.067	0.036	0.080	0.003	0.011	0.074	0.158	67.167	0.000	67.240	0.158
TS2	0.033	0.078	0.034	0.094	0.003	0.013	0.071	0.185	84.000	0.000	84.071	0.185
T3	0.031	0.085	0.032	0.105	0.003	0.014	0.065	0.204	100.833	0.000	100.899	0.204
T4	0.026	0.093	0.027	0.116	0.002	0.016	0.055	0.225	134.500	0.000	134.555	0.225
TS3	0.024	0.094	0.024	0.117	0.002	0.016	0.051	0.228	151.333	0.000	151.384	0.228
T5	0.022	0.095	0.022	0.117	0.002	0.016	0.046	0.228	168.167	0.000	168.213	0.228
T6	0.018	0.095	0.018	0.119	0.002	0.016	0.038	0.230	201.833	0.000	201.871	0.230
TS4	0.015	0.094	0.016	0.118	0.001	0.016	0.033	0.229	218.667	0.000	218.700	0.229
T7	0.013	0.093	0.014	0.116	0.001	0.016	0.028	0.225	235.500	0.000	235.528	0.225
T8	0.008	0.086	0.009	0.108	0.001	0.014	0.018	0.208	269.167	0.000	269.185	0.208
TS5	0.006	0.079	0.006	0.097	0.001	0.013	0.013	0.189	286.000	0.000	286.013	0.189
T9	0.005	0.068	0.005	0.082	0.000	0.011	0.010	0.162	302.833	0.000	302.843	0.162
T10	0.002	0.038	0.002	0.045	0.000	0.006	0.004	0.088	336.500	0.000	336.504	0.088
TS6	0.001	0.017	0.001	0.019	0.000	0.002	0.001	0.039	355.000	0.000	355.001	0.039
T11	0.000	0.000	0.000	0.000	0.000	0.000	0.000	0.000	370.000	0.000	370.000	0.000

(1) Final Arch Coordinates are based on a local axis from the centerline of the Tie Girder at Pier 1 to centerline of the Tie Girder at Pier 2.
Positive dY camber values denote upward camber
Negative dX camber values denote shortening of member

Notes:
"Steel Only" camber represents the amount of deflection due to all structural steel. Erection deflections are not included.
"Slab Only" camber represents the amount of deflection due to the 8" deck slab.
"Barriers" camber represent the amount of deflection due to barriers, railings, utilities and other items added after deck has cured.
Camber Tables are based on total dead loads and are not adjusted for erection sequence or erection deflections.
The Contractor shall fabricate Tie Girders such that under total dead load, the top of the Tie Girder is parallel with the profile gradeline.
The Contractor shall fabricate the Arch Rib such that under total dead load the Arch Rib follows the rib geometry shown on sheet 26 of 79.
The Contractor shall verify the deflections, camber, and laydown dimensions shown in the Plans.

Work Point	ARCH RIB CAMBER											
	Steel Only		Slab Only		Barriers		Total Camber		Final Arch Coord. (1)		Cambered Arch Coord.	
	dX (ft)	dY (ft)	dX (ft)	dY (ft)	dX (ft)	dY (ft)	dX (ft)	dY (ft)	X (ft)	Y (ft)	X (ft)	Y (ft)
T0	0.039	0.000	0.040	0.000	0.004	0.000	0.084	0.000	0.000	0.000	0.084	0.000
RS1	0.028	0.016	0.029	0.017	0.002	0.002	0.060	0.035	14.726	11.427	14.786	11.462
R1	0.023	0.025	0.024	0.026	0.002	0.003	0.049	0.054	23.602	17.856	23.651	17.911
RS2	0.017	0.038	0.017	0.040	0.001	0.005	0.035	0.083	38.588	27.931	38.623	28.014
R2	0.014	0.045	0.014	0.048	0.000	0.006	0.028	0.099	48.342	33.961	48.370	34.061
R3	0.011	0.059	0.010	0.063	0.000	0.008	0.021	0.130	74.248	47.960	74.270	48.090
RS3	0.011	0.062	0.010	0.067	0.000	0.009	0.021	0.137	83.955	52.450	83.976	52.588
R4	0.012	0.066	0.011	0.071	0.000	0.009	0.022	0.147	99.816	58.902	99.839	59.048
R5	0.012	0.066	0.011	0.072	0.000	0.009	0.023	0.147	101.505	59.524	101.528	59.671
RS4	0.013	0.070	0.013	0.074	0.001	0.009	0.026	0.153	120.011	65.525	120.037	65.679
R6	0.014	0.072	0.014	0.075	0.001	0.010	0.028	0.157	130.348	68.227	130.376	68.384
R7	0.015	0.073	0.015	0.076	0.001	0.010	0.031	0.159	139.794	70.287	139.824	70.446
R8	0.017	0.074	0.018	0.077	0.001	0.010	0.036	0.161	161.091	73.501	161.127	73.663
RS5	0.018	0.075	0.018	0.077	0.001	0.010	0.038	0.162	167.771	74.102	167.809	74.264
R9	0.019	0.075	0.020	0.078	0.002	0.010	0.040	0.163	175.833	74.566	175.873	74.729
R10	0.021	0.075	0.022	0.078	0.002	0.010	0.045	0.163	194.167	74.566	194.212	74.729
RS6	0.022	0.075	0.023	0.078	0.002	0.010	0.047	0.162	202.229	74.102	202.276	74.264
R11	0.023	0.074	0.024	0.077	0.002	0.010	0.049	0.162	208.909	73.501	208.958	73.663
R12	0.025	0.073	0.027	0.077	0.003	0.010	0.054	0.160	230.206	70.287	230.260	70.447
R13	0.026	0.072	0.028	0.076	0.003	0.010	0.057	0.158	239.652	68.227	239.708	68.385
RS7	0.027	0.070	0.029	0.075	0.003	0.010	0.059	0.155	249.989	65.525	250.048	65.680
R14	0.028	0.067	0.031	0.073	0.003	0.009	0.062	0.149	268.495	59.524	268.557	59.673
R15	0.028	0.066	0.031	0.073	0.003	0.009	0.063	0.148	270.184	58.902	270.246	59.050
RS8	0.029	0.062	0.032	0.068	0.004	0.009	0.064	0.139	286.045	52.450	286.109	52.590
R16	0.029	0.060	0.032	0.065	0.004	0.008	0.064	0.133	295.752	47.960	295.816	48.093
R17	0.026	0.046	0.028	0.050	0.003	0.006	0.058	0.103	321.658	33.961	321.716	34.064
RS9	0.023	0.039	0.025	0.042	0.003	0.005	0.051	0.086	331.412	27.931	331.463	28.018
R18	0.017	0.026	0.018	0.028	0.002	0.003	0.037	0.057	346.398	17.856	346.435	17.914
RS10	0.011	0.017	0.013	0.018	0.001	0.002	0.026	0.038	355.274	11.427	355.299	11.464
T11	0.000	0.000	0.000	0.000	0.000	0.000	0.000	0.000	370.000	0.000	370.000	0.000

L:\ROCKFORD\08268682\Dgn\CADD_Sheets\S_38_Tied Arch Camber.dgn

CMT ©Copyright CMT, Inc.
CRAWFORD, MURPHY & TILLY, INC.
CONSULTING ENGINEERS
License No. 184-000613

HNTB

DESIGNED - PA, JDJ, BPD, CJW	REVISED -		
DRAWN - GLD	REVISED -		
CHECKED - RJK	REVISED -		
DATE - 02/04/2011	REVISED -		

CITY OF ROCKFORD
MORGAN STREET BRIDGE

TIED ARCH CAMBER
STRUCTURE NO. 101-6108

SCALE: | SHEET NO. 29 OF 79 SHEETS | STA. 47+00.74 TO STA. 52+63.50

F.A.U. RTE.	SECTION	COUNTY	TOTAL SHEETS	SHEET NO.
5077	99-00493-00-BR	WINNEBAGO	253	155

CONTRACT NO. 85529

FED. ROAD DIST. NO. 2 | ILLINOIS | FED. AID PROJECT BRM-5099(65)

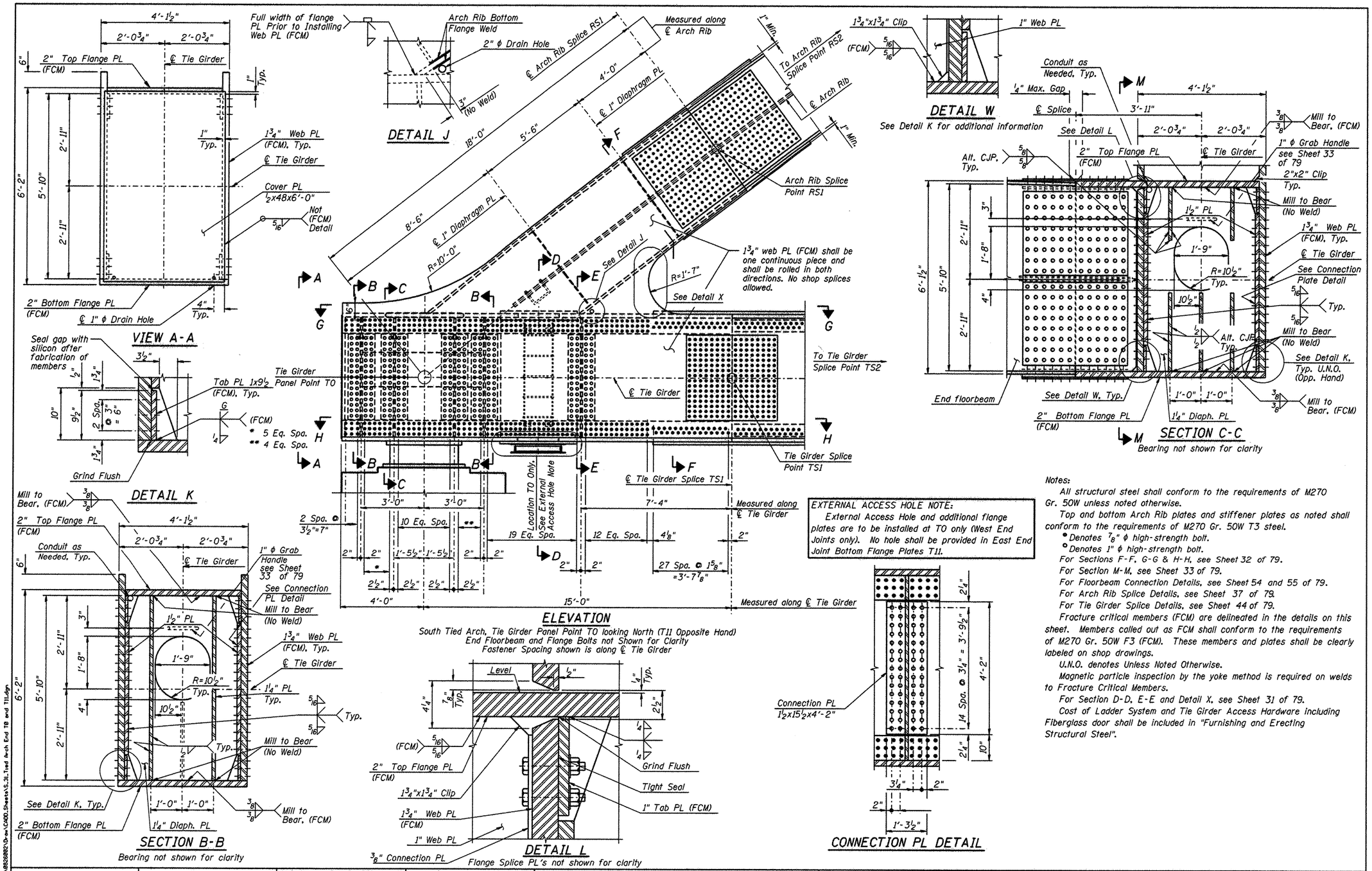

EXTERNAL ACCESS HOLE NOTE:
External Access Hole and additional flange plates are to be installed at T0 only (West End Joints only). No hole shall be provided in East End Joint Bottom Flange Plates T11.

Notes:

All structural steel shall conform to the requirements of M270 Gr. 50W unless noted otherwise.

Top and bottom Arch Rib plates and stiffener plates as noted shall conform to the requirements of M270 Gr. 50W T3 steel.

• Denotes ⅞" ϕ high-strength bolt.

° Denotes 1" ϕ high-strength bolt.

For Sections F-F, G-G & H-H, see Sheet 32 of 79.

For Section M-M, see Sheet 33 of 79.

For Floorbeam Connection Details, see Sheet 54 and 55 of 79.

For Arch Rib Splice Details, see Sheet 37 of 79.

For Tie Girder Splice Details, see Sheet 44 of 79.

Fracture critical members (FCM) are delineated in the details on this sheet. Members called out as FCM shall conform to the requirements of M270 Gr. 50W F3 (FCM). These members and plates shall be clearly labeled on shop drawings.

U.N.O. denotes Unless Noted Otherwise.

Magnetic particle inspection by the yoke method is required on welds to Fracture Critical Members.

For Section D-D, E-E and Detail X, see Sheet 31 of 79.

Cost of Ladder System and Tie Girder Access Hardware including Fiberglass door shall be included in "Furnishing and Erecting Structural Steel".

CMT CRAWFORD, MURPHY & TILLY, INC. CONSULTING ENGINEERS License No. 184-000613

HNTB

DESIGNED - PA, JDJ, BPD, CJW	REVISED -		
DRAWN - GLD	REVISED -		
CHECKED - RJK	REVISED -		
DATE - 02/04/2011	REVISED -		

CITY OF ROCKFORD
MORGAN STREET BRIDGE

TIED ARCH END T0 AND T11
STRUCTURE NO. 101-6108

SCALE: | SHEET NO. 30 OF 79 SHEETS | STA. 47+00.74 TO STA. 52+63.50

F.A.U. RTE.	SECTION	COUNTY	TOTAL SHEETS	SHEET NO.
5077	99-00493-00-BR	WINNEBAGO	253	156

CONTRACT NO. 85529

FED. ROAD DIST. NO. 2 | ILLINOIS | FED. AID PROJECT BRM-5099(65)

L:\ROCKFORD\B2608821\Dgns\C000.Sheets\S_31.Tied Arch End T0 and T11.dgn

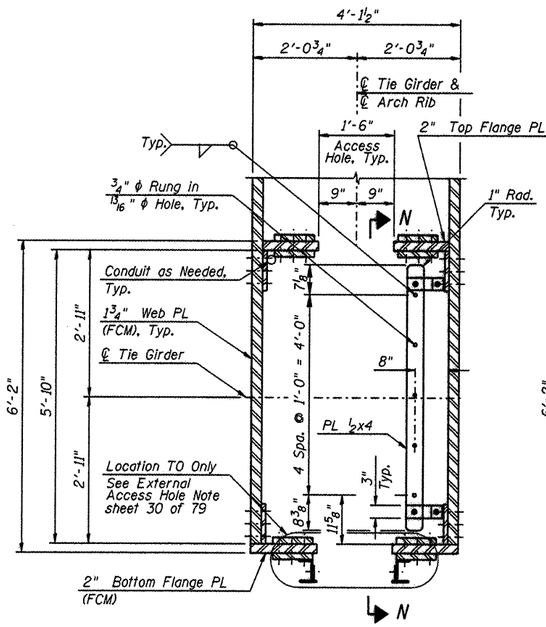

SECTION D-D

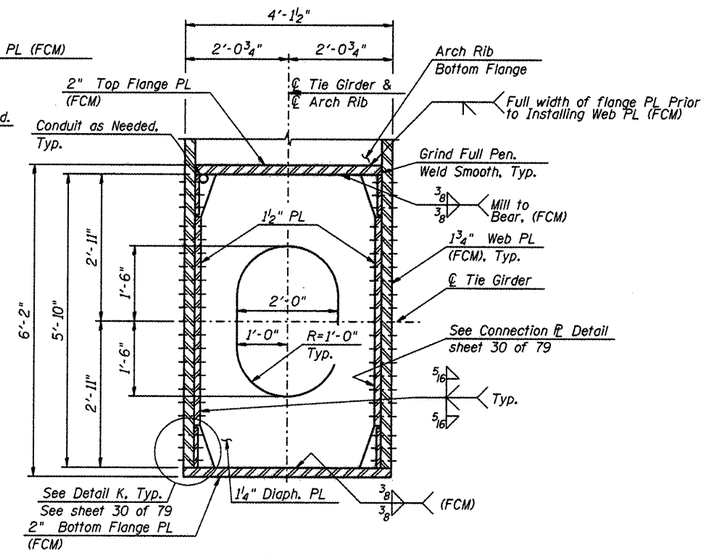

SECTION E-E

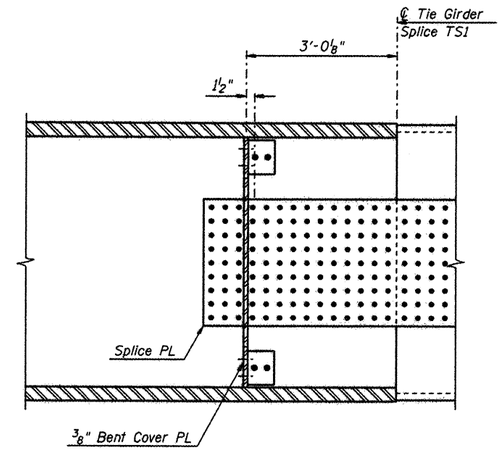

SECTION Z-Z

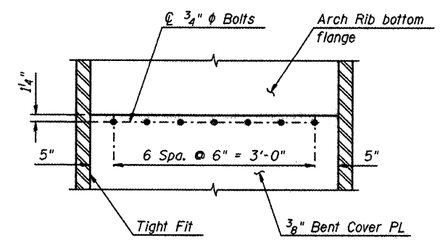

SECTION AA-AA

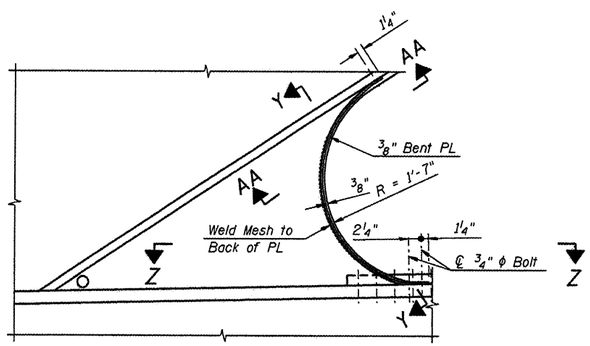

DETAIL X

Web plate not shown for clarity

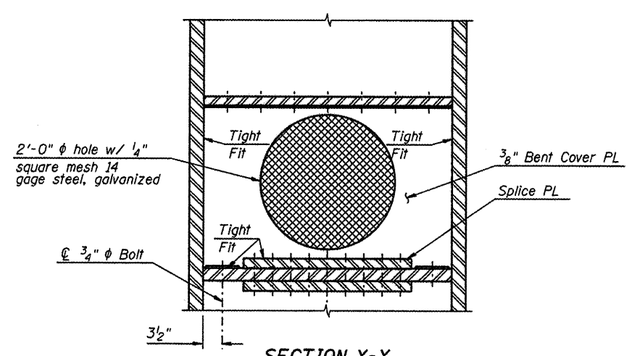

SECTION Y-Y

Notes:

For Section N-N, see Sheet 33 of 79.

For Access Hole details, see Sheet 33 of 79.

Care shall be taken by the Contractor to minimize distortion during welding.

L:\ROCKFORD\8826882\Draw\C400_Sheets\S_32_Tied Arch End Details 1.dgn

CMT ©Copyright CMT, Inc. CRAWFORD, MURPHY & TILLY, INC. CONSULTING ENGINEERS License No. 184-000663	HNTB	DESIGNED - PA, JDJ, BPD, CJW	REVISED -	CITY OF ROCKFORD MORGAN STREET BRIDGE	TIED ARCH END DETAILS - I STRUCTURE NO. 101-6108	F.A.U. RTE.	SECTION	COUNTY	TOTAL SHEETS	SHEET NO.
		DRAWN - GLD	REVISED -			5077	99-00493-00-BR	WINNEBAGO	253	157
		CHECKED - RJK	REVISED -					CONTRACT NO. 85529		
		DATE - 02/04/2011	REVISED -		SCALE: / SHEET NO. 31 OF 79 SHEETS / STA. 47+00.74 TO STA. 52+63.50	FED. ROAD DIST. NO. 2	ILLINOIS	FED. AID PROJECT BRM-5099(65)		

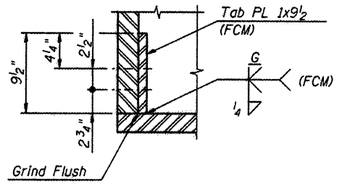

DETAIL P

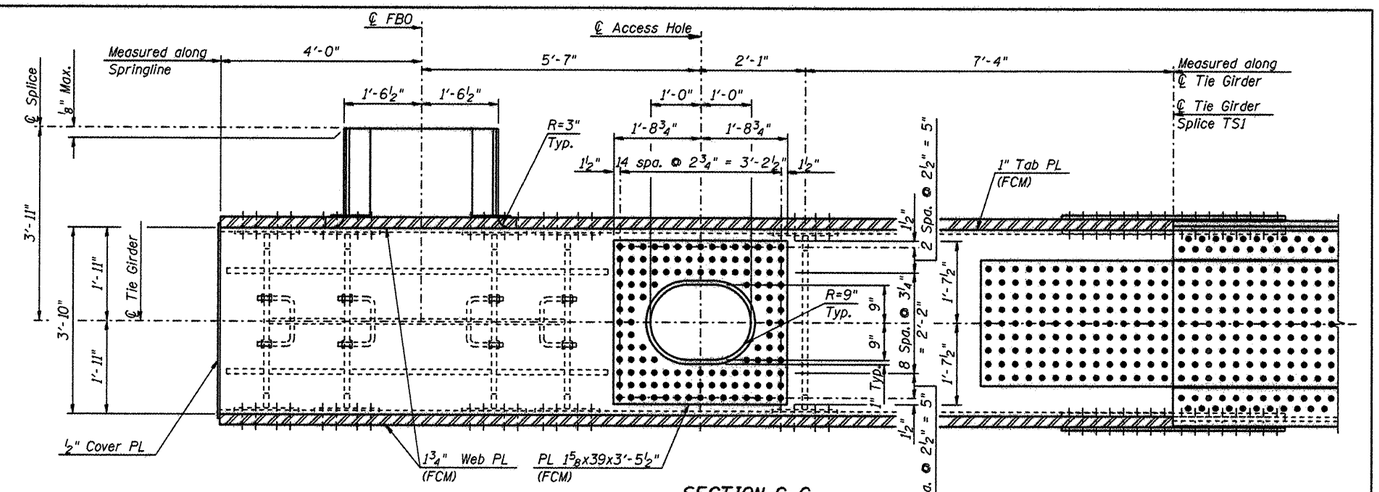

SECTION G-G

Arch Rib not shown for clarity
Shown at ℄ FBO. FB11 opposite hand
(Bolts in Tab PL not shown for clarity)

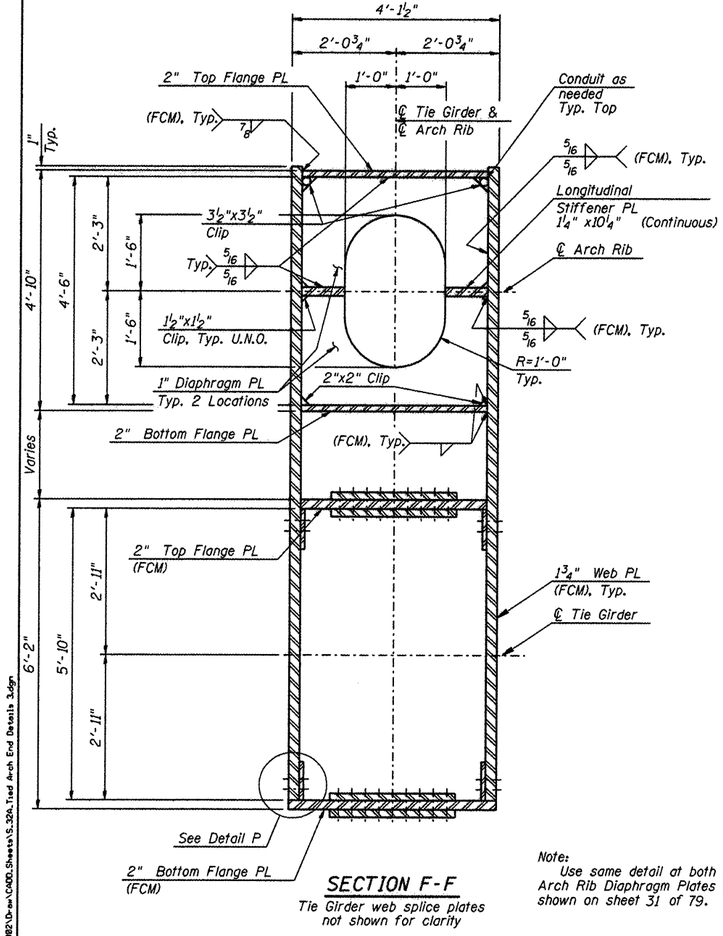

SECTION F-F

Tie Girder web splice plates
not shown for clarity

Note:
Use same detail at both 1" Arch Rib Diaphragm Plates as shown on sheet 31 of 79.

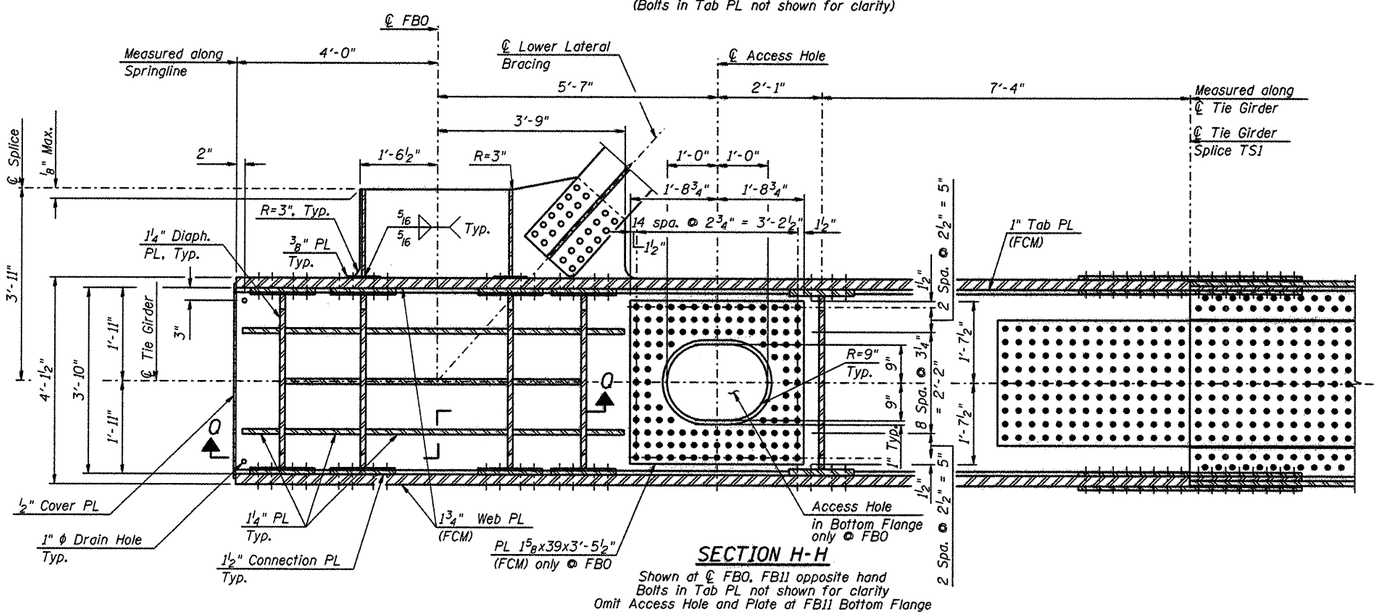

SECTION H-H

Shown at ℄ FBO. FB11 opposite hand
Bolts in Tab PL not shown for clarity
Omit Access Hole and Plate at FB11 Bottom Flange

Notes:

- • Denotes ⅞" ϕ high-strength bolt.
- ○ Denotes 1" ϕ high-strength bolt.

For Section Q-Q, see Sheet 33 of 79.
For Lower Lateral Bracing Details, see Sheet 62 of 79.
For additional notes and details, see Sheets 30, 31 and 33 of 79.
For Location of Sections F-F, G-G and H-H, see Sheet 30 of 79.

L:\ROCKFORD\08260882\Dwg\CADD\Sheets\S_32A_Tied Arch End Details 3.dgn

CMT ©Copyright CMT, Inc.
CRAWFORD, MURPHY & TILLY, INC.
CONSULTING ENGINEERS
License No. 184-000613

HNTB

DESIGNED - PA, JDJ, BPD, CJW	REVISED -		
DRAWN - GLD	REVISED -		
CHECKED - RJK	REVISED -		
DATE - 02/04/2011	REVISED -		

CITY OF ROCKFORD
MORGAN STREET BRIDGE

TIED ARCH END DETAILS – II
STRUCTURE NO. 101-6108

SCALE: | SHEET NO. 32 OF 79 SHEETS | STA. 47+00.74 TO STA. 52+63.50

F.A.U. RTE.	SECTION	COUNTY	TOTAL SHEETS	SHEET NO.
5077	99-00493-00-BR	WINNEBAGO	253	158
		CONTRACT NO. 85529		

FED. ROAD DIST. NO. 2 | ILLINOIS | FED. AID PROJECT BRM-5099(65)

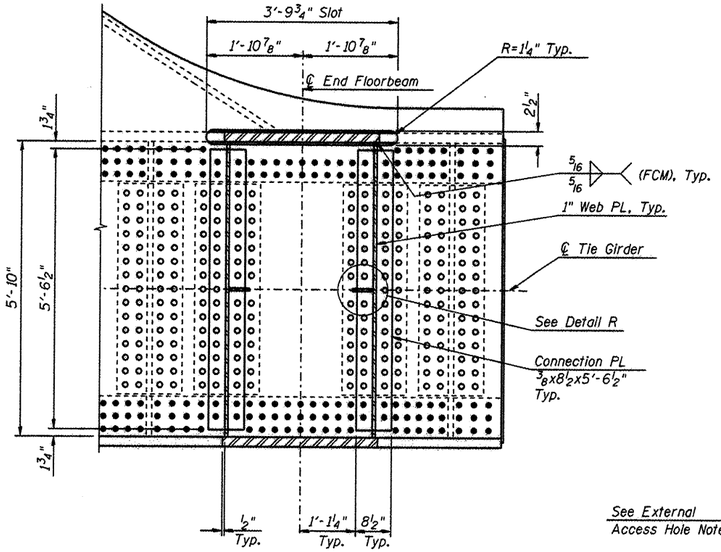

SECTION M-M

Splice PL's not shown for clarity

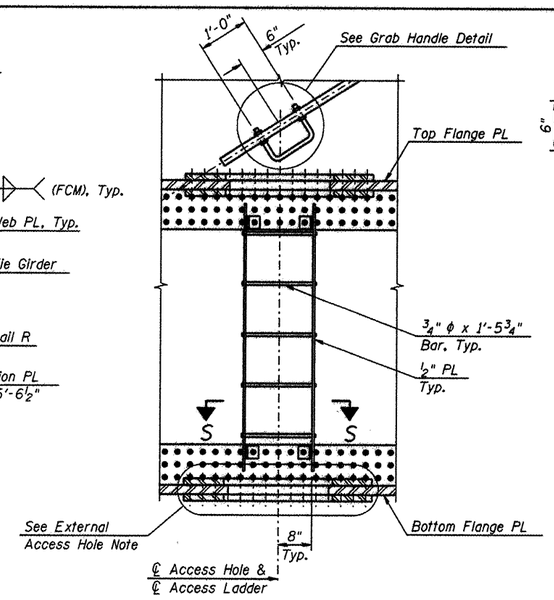

SECTION N-N

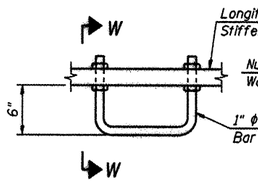

GRAB HANDLE DETAIL

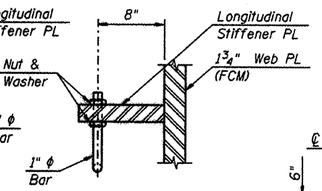

SECTION W-W

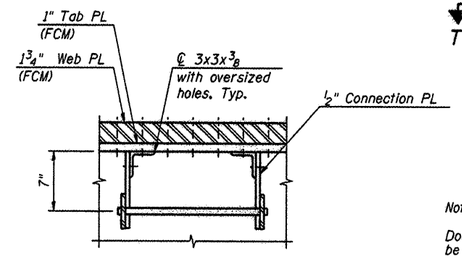

SECTION S-S

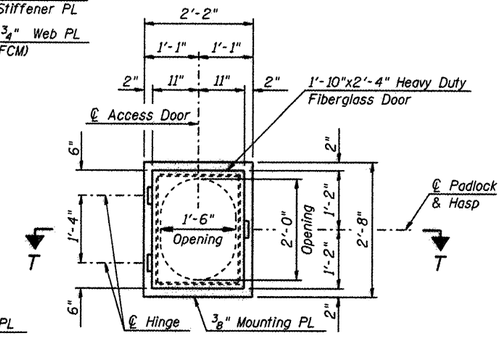

ACCESS DOOR DETAIL

Detail for West End Joints T0 Only.
No external access hole in East End Joints T11.

Notes:
Install Fiberglass door per manufacturer's recommendations. Door shall be heavy duty and water tight. Fiberglass door shall be approved by the Engineer.

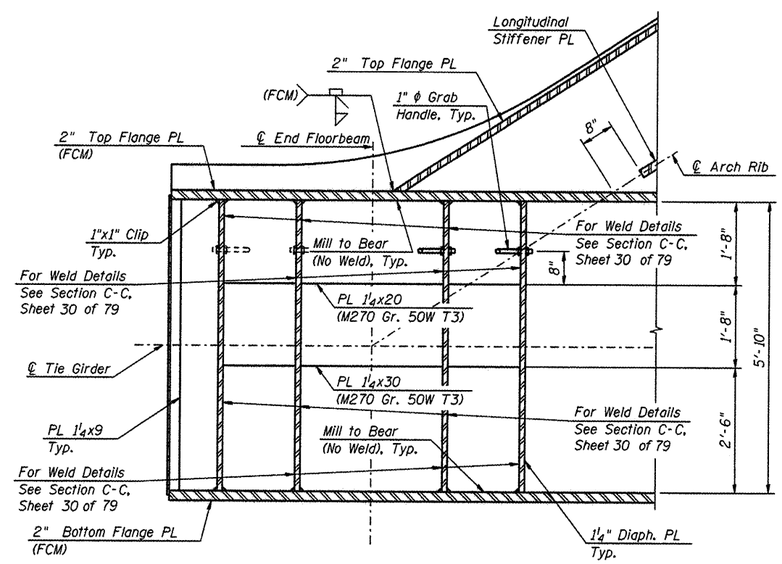

SECTION Q-Q

Tab PL's, Connection PL's and Web Bolts not Shown for Clarity

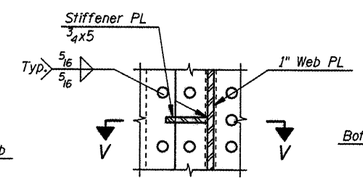

DETAIL R

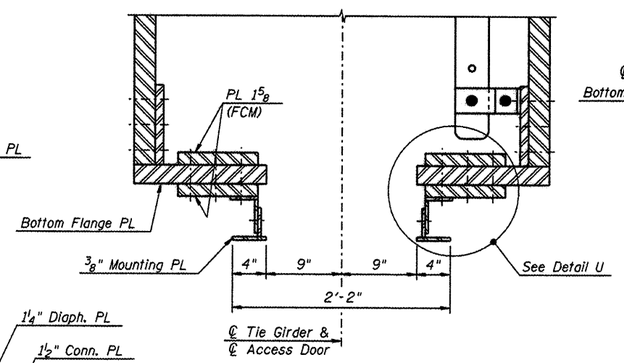

SECTION T-T

Fiberglass Door not shown for clarity
Section at West End Joints T0 only.
No access hole in bottom flange at
East End Joints T11.

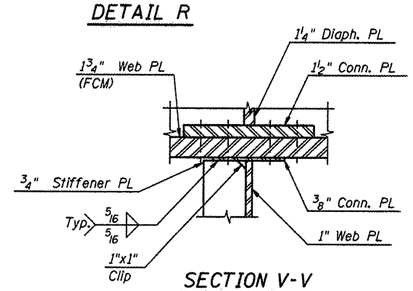

SECTION V-V

Splice PL's not shown for clarity

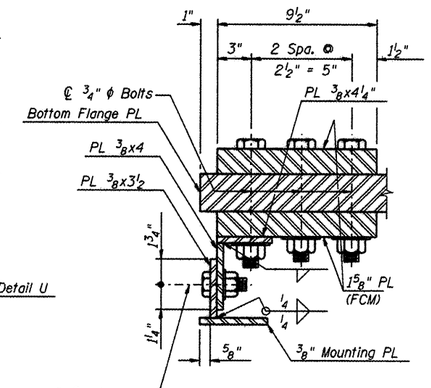

DETAIL U

Detail at West End Joints T0 only.
No access hole in bottom flange at
East End Joints T11.

EXTERNAL ACCESS HOLE NOTE:
External Access Hole and additional flange plates are to be installed at T0 only (West End Joints only). No hole shall be provided in East End Joint Bottom Flange Plates T11.

Notes:
•Denotes ⅞" ϕ high-strength bolt.
○Denotes 1" ϕ high-strength bolt.
For Floorbeam Connection, see Sheet 54 and 55 of 79.
For additonal notes and details, see Sheets 30, 31 and 32 of 79.
For location of Section M-M, see Sheet 30 of 79.
For location of Section N-N, see Sheet 31 of 79.
For location of Section Q-Q, see Sheet 32 of 79.

L:\ROCKFORD\0826082\Design\CADD_Sheets\S_33_Tied Arch End Details 2.dgn

CMT ©Copyright CMT, Inc.
CRAWFORD, MURPHY & TILLY, INC.
CONSULTING ENGINEERS
License No. 184-000613

HNTB

DESIGNED - PA, JDJ, BPD, CJW	REVISED -		
DRAWN - GLD	REVISED -		
CHECKED - RJK	REVISED -		
DATE - 02/04/2011	REVISED -		

CITY OF ROCKFORD
MORGAN STREET BRIDGE

TIED ARCH END DETAILS - III
STRUCTURE NO. 101-6108

SCALE: | SHEET NO. 33 OF 79 SHEETS | STA. 47+00.74 TO STA. 52+63.50

F.A.U. RTE.	SECTION	COUNTY	TOTAL SHEETS	SHEET NO.
5077	99-00493-00-BR	WINNEBAGO	253	159
		CONTRACT NO. 85529		
FED. ROAD DIST. NO. 2	ILLINOIS	FED. AID PROJECT BRM-5099(65)		

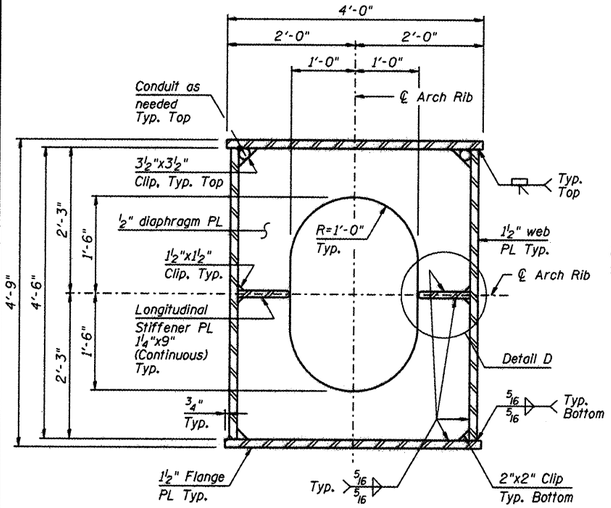

SECTION A-A

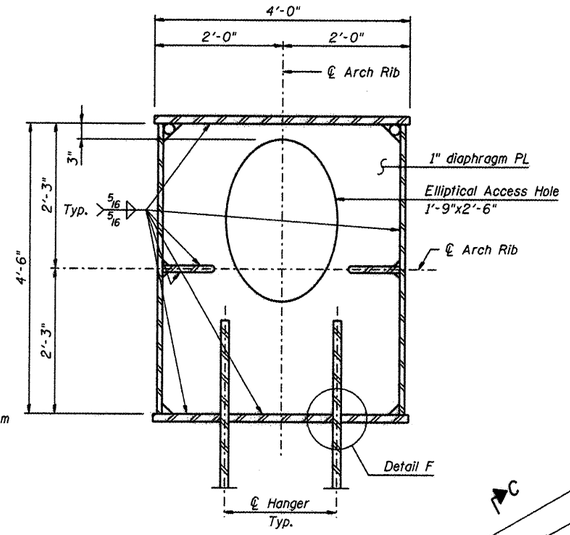

SECTION B-B

(Hanger Plate Angles not shown for clarity.)
(See section C-C for Additional Information)

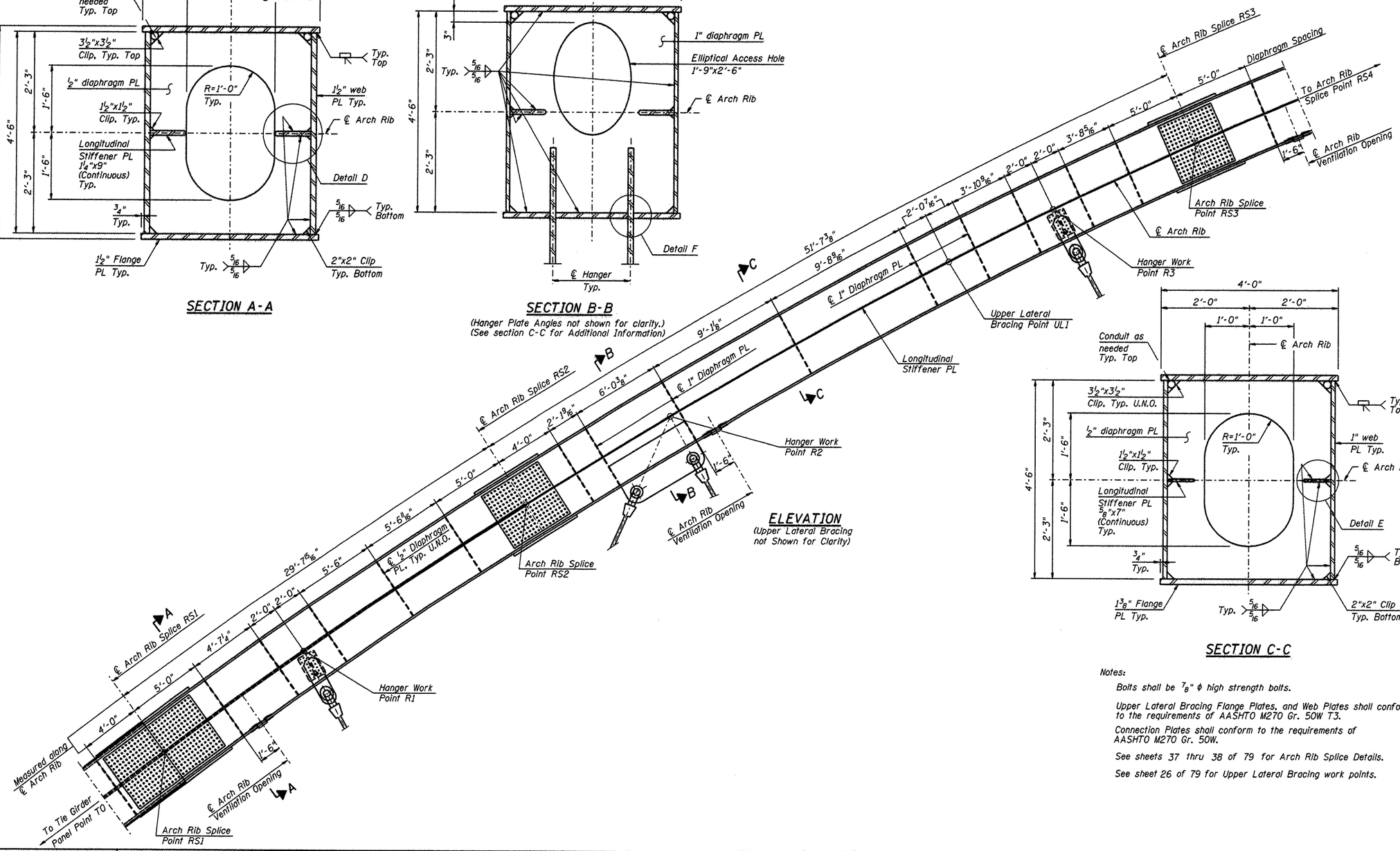

ELEVATION

(Upper Lateral Bracing not Shown for Clarity)

SECTION C-C

Notes:

Bolts shall be ⅞" ϕ high strength bolts.

Upper Lateral Bracing Flange Plates, and Web Plates shall conform to the requirements of AASHTO M270 Gr. 50W T3.

Connection Plates shall conform to the requirements of AASHTO M270 Gr. 50W.

See sheets 37 thru 38 of 79 for Arch Rib Splice Details.

See sheet 26 of 79 for Upper Lateral Bracing work points.

L:\ROCKFORD\6826882\Drawings\CADD\Sheets\S_34_Rib RS1 to RS3.dgn

CMT ©Copyright CMT, Inc.
CRAWFORD, MURPHY & TILLY, INC.
CONSULTING ENGINEERS
License No. 184-000613

HNTB

DESIGNED	- PA, JDJ, BPD, CJW	REVISED	-
DRAWN	- GLD	REVISED	-
CHECKED	- RJK	REVISED	-
DATE	- 02/04/2011	REVISED	-

CITY OF ROCKFORD
MORGAN STREET BRIDGE

ARCH RIB RS1 TO RS3 AND RS10 TO RS8
STRUCTURE 101-6108

SCALE: | SHEET NO. 34 OF 79 SHEETS | STA. 47+00.74 TO STA. 52+63.50

F.A.U. RTE.	SECTION	COUNTY	TOTAL SHEETS	SHEET NO.
5077	99-00493-00-BR	WINNEBAGO	253	160

CONTRACT NO. 85529

FED. ROAD DIST. NO. 2 | ILLINOIS | FED. AID PROJECT BRM-5099(65)

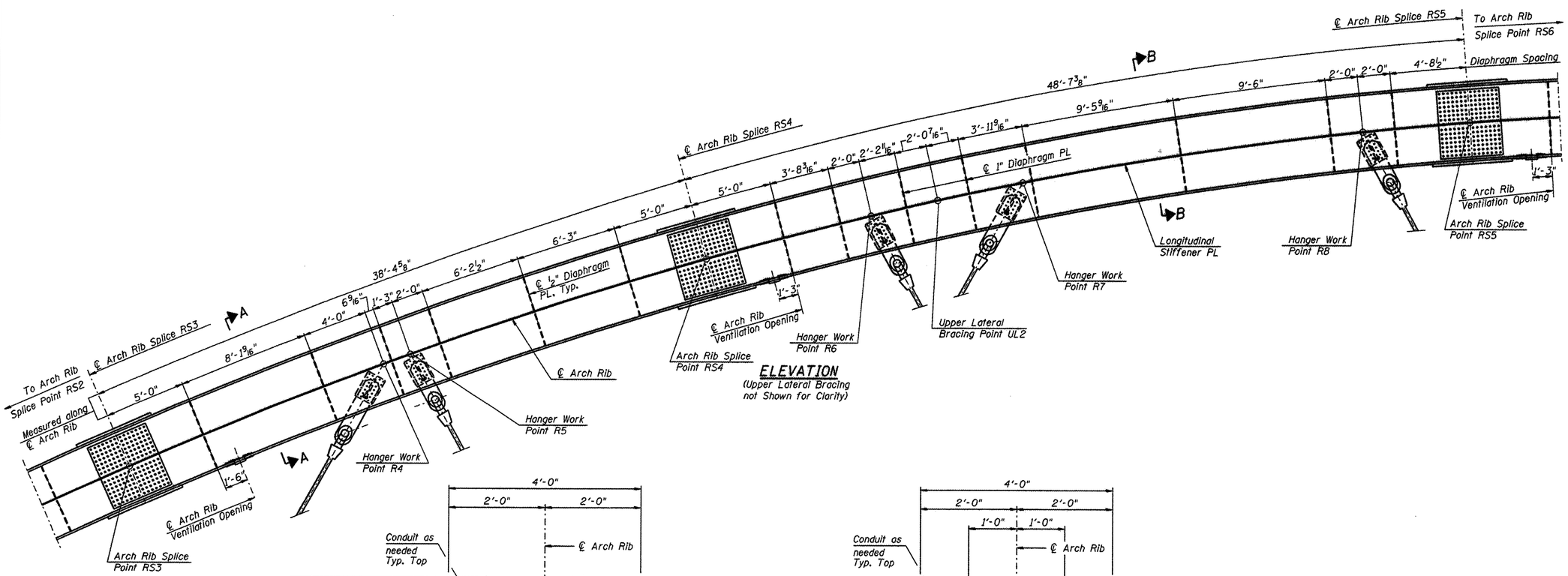

ELEVATION

(Upper Lateral Bracing not Shown for Clarity)

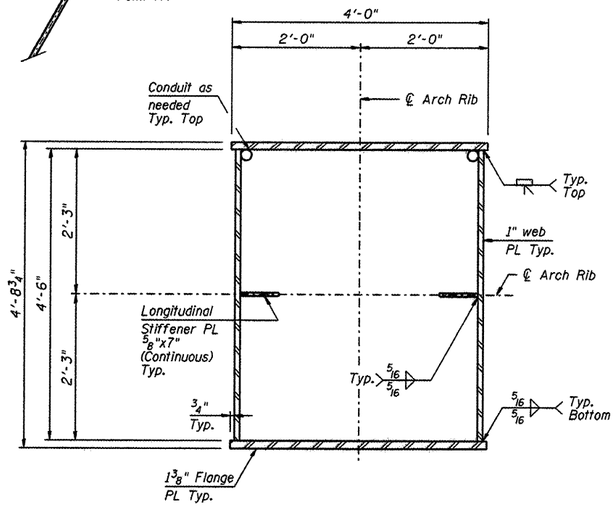

SECTION A-A

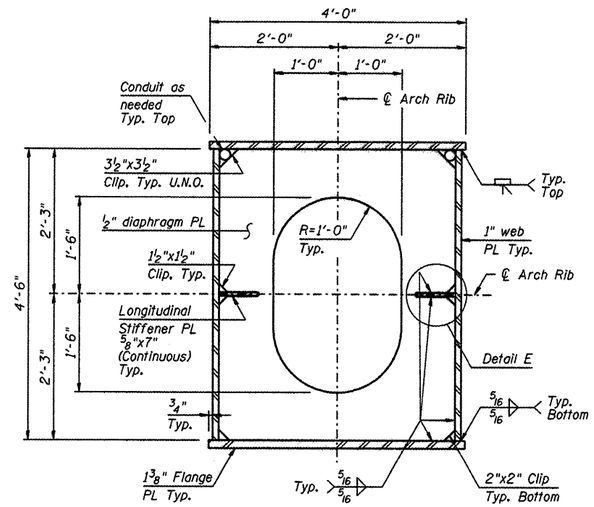

SECTION B-B

Notes:

Arch Rib Flange Plates, Web Plates and Longitudinal Stiffeners shall conform to the requirements of AASHTO M270 Gr. 50W T3.

Diaphragm Plates shall conform to the requirements of AASHTO M270 Gr. 50W.

See sheets 37 thru 38 of 79 for Arch Rib Splice Details.

See sheets 47 thru 48 of 79 for Arch Rib Hanger Details.

See sheet 40 of 79 for Upper Lateral Bracing Details.

See sheet 39 of 79 for Arch Rib Ventilation Details.

See sheet 36 of 79 for Detail E.

L:\ROCKFORD\B926892\Draw\CADD_Sheets\S_35_Rib RS3 to RS5.dgn

CMT CRAWFORD, MURPHY & TILLY, INC. CONSULTING ENGINEERS License No. 184-000663

HNTB

DESIGNED - PA, JDJ, BPD, CJW	REVISED -		
DRAWN - GLD	REVISED -		
CHECKED - RJK	REVISED -		
DATE - 02/04/2011	REVISED -		

CITY OF ROCKFORD
MORGAN STREET BRIDGE

ARCH RIB RS3 TO RS5 AND RS8 TO RS6
STRUCTURE NO. 101-6108

SCALE: | SHEET NO. 35 OF 79 SHEETS | STA. 47+00.74 TO STA. 52+63.50

F.A.U. RTE.	SECTION	COUNTY	TOTAL SHEETS	SHEET NO.
5077	99-00493-00-BR	WINNEBAGO	253	161
		CONTRACT NO. 85529		

FED. ROAD DIST. NO. 2 | ILLINOIS | FED. AID PROJECT BRM-5099(65)

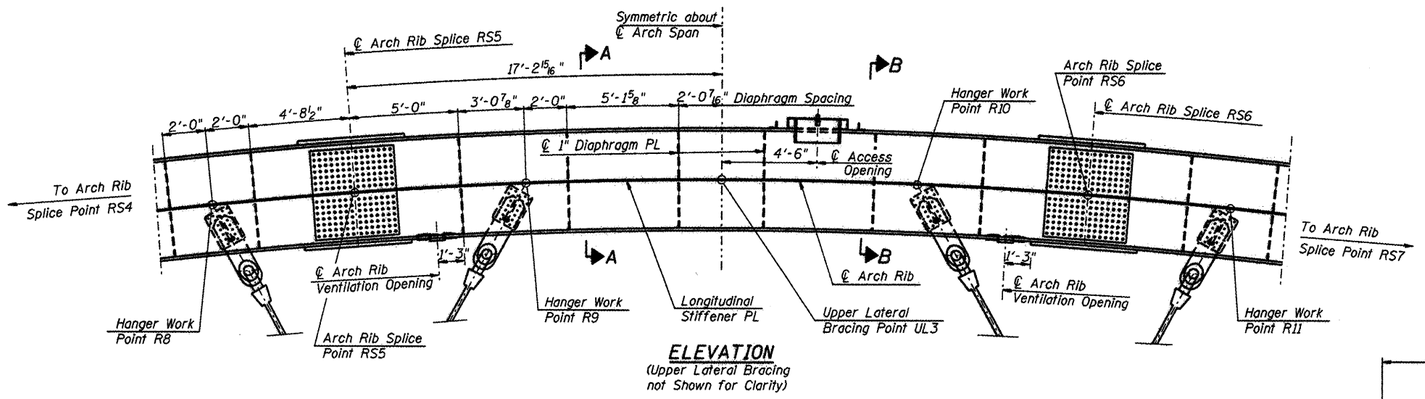

ELEVATION
(Upper Lateral Bracing not Shown for Clarity)

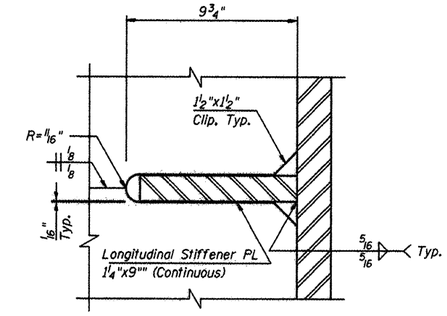

DETAIL D

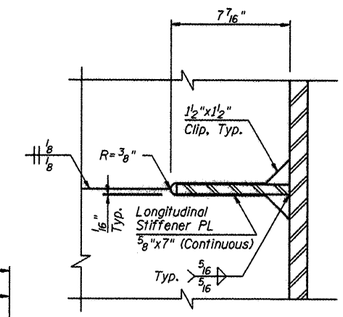

DETAIL E

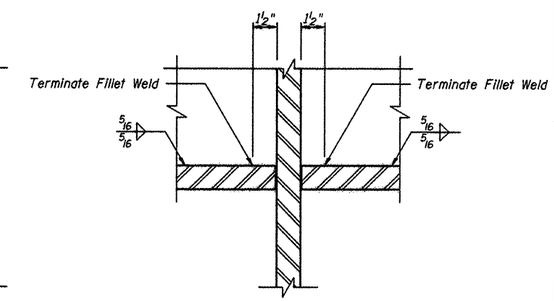

DETAIL F

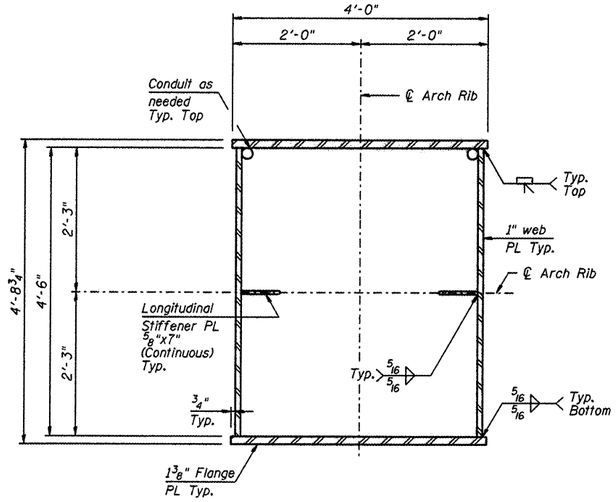

SECTION A-A

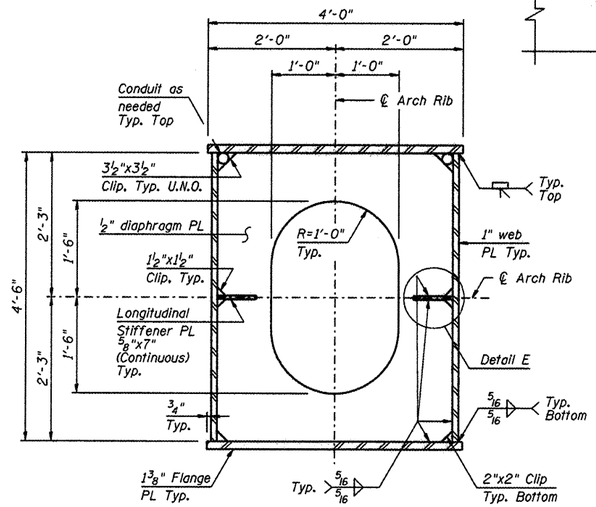

SECTION B-B

Notes:

Arch Rib Flange Plates, Web Plates and Longitudinal Stiffeners shall conform to the requirements of AASHTO M270 Gr. 50W T3.

Diaphragm Plates shall conform to the requirements of AASHTO M270 Gr. 50W.

See sheets 37 thru 38 of 79 for Arch Rib Splice Details.

See sheets 47 thru 48 of 79 for Arch Rib Hanger Details.

See sheet 40 of 79 for Upper Lateral Bracing Details.

See sheet 39 of 79 for Arch Rib Ventilation Details.

See sheets 34 thru 35 of 79 for location of Details D, E and F.

L:\ROCKFORD\B26882\Draw\CADD_Sheets\S_36_Rib RS5 to RS6.dgn

CMT
CRAWFORD, MURPHY & TILLY, INC.
CONSULTING ENGINEERS
License No. 184-000663

HNTB

DESIGNED	PA, JDJ, BPD, CJW	REVISED	-
DRAWN	GLD	REVISED	-
CHECKED	RJK	REVISED	-
DATE	02/04/2011	REVISED	-

CITY OF ROCKFORD
MORGAN STREET BRIDGE

ARCH RIB RS5 TO RS6
STRUCTURE NO. 101-6108

SCALE: | SHEET NO. 36 OF 79 SHEETS | STA. 47+00.74 TO STA. 52+63.50

F.A.U. RTE.	SECTION	COUNTY	TOTAL SHEETS	SHEET NO.
5077	99-00493-00-BR	WINNEBAGO	253	162

CONTRACT NO. 85529

FED. ROAD DIST. NO. 2 | ILLINOIS | FED. AID PROJECT BRM-5099(65)

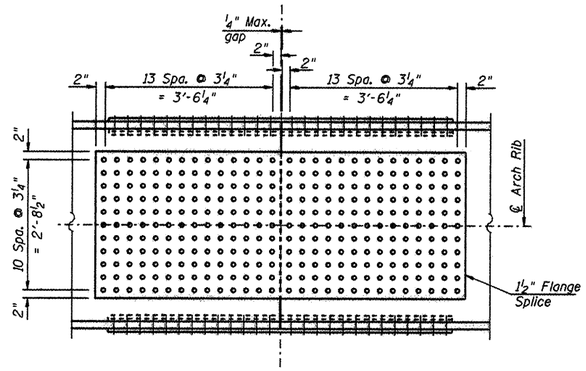

TOP VIEW - RS1 TOP & BOTTOM FLANGE SPLICE
(RS10 Opposite Hand)

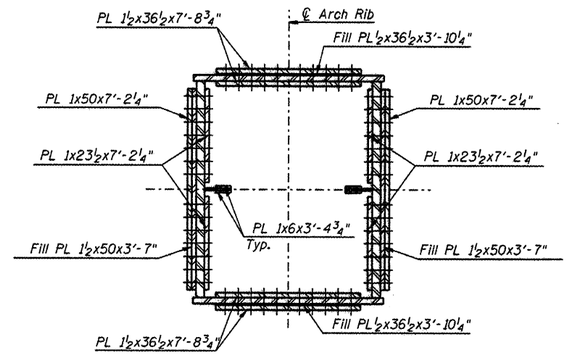

SECTION A-A

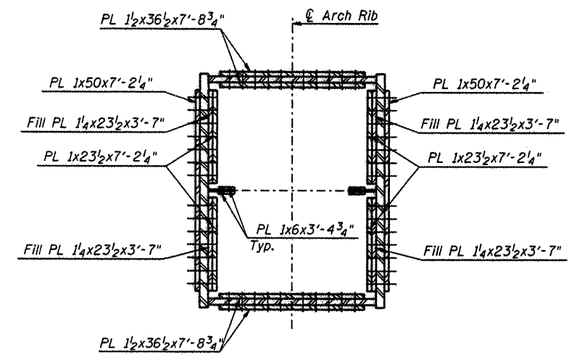

SECTION C-C

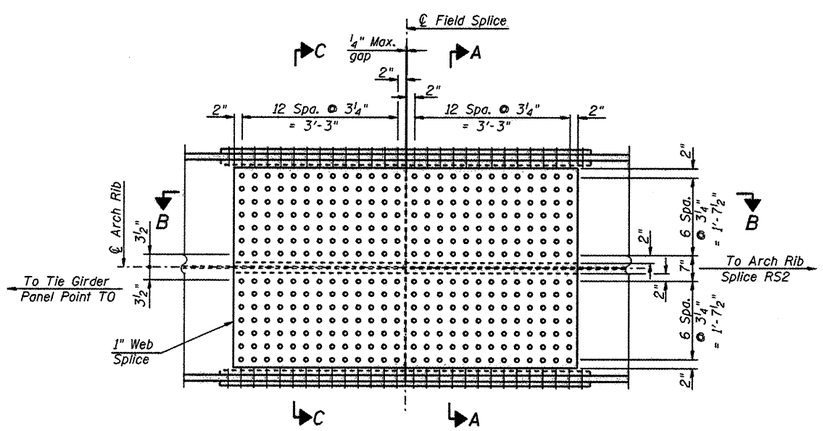

ARCH RIB SPLICE RS1 - WEB SPLICE
(RS10 Opposite Hand)

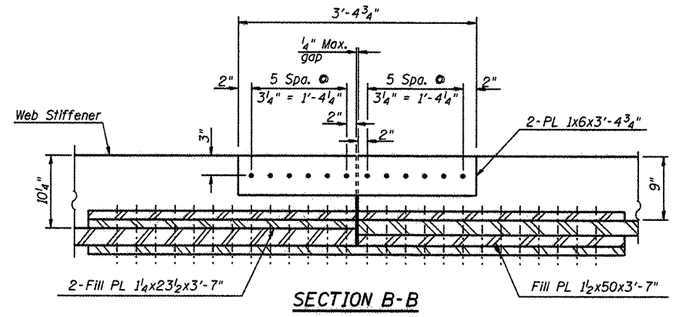

SECTION B-B

Notes:

Bolts shall be 7/8" ϕ high-strength bolts.

Splice plates and fill plates shall conform to the requirements of M270 Gr. 50W T3.

For Arch Rib Elevation and Section Details, See sheets 34 thru 36 of 79.

L:\ROCKFORD\B826982\Drawn\CADD.Sheets\S.37.Rib Splice Details 1.dgn

CMT ©Copyright CMT, Inc.
CRAWFORD, MURPHY & TILLY, INC.
CONSULTING ENGINEERS
License No. 184-000613

HNTB

DESIGNED - PA, JDJ, BPD, CJW	REVISED -		
DRAWN - GLD	REVISED -		
CHECKED - RJK	REVISED -		
DATE - 02/04/2011	REVISED -		

CITY OF ROCKFORD
MORGAN STREET BRIDGE

ARCH RIB FIELD SPLICE DETAILS - I
STRUCTURE NO. 101-6108

SCALE: | SHEET NO. 37 OF 79 SHEETS | STA. 47+00.74 TO STA. 52+63.50

F.A.U. RTE.	SECTION	COUNTY	TOTAL SHEETS	SHEET NO.
5077	99-00493-00-BR	WINNEBAGO	253	163
		CONTRACT NO. 85529		

FED. ROAD DIST. NO. 2 | ILLINOIS | FED. AID PROJECT BRM-5099(65)

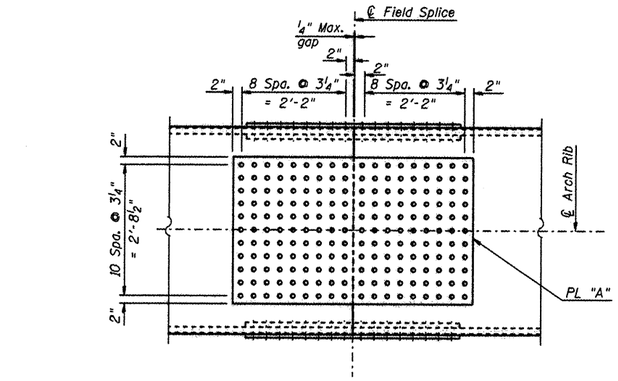

TOP VIEW - RS2 THRU RS5 TOP & BOTTOM FLANGE SPLICE

(RS6 Thru RS9 Opposite Hand)
RS2 Shown

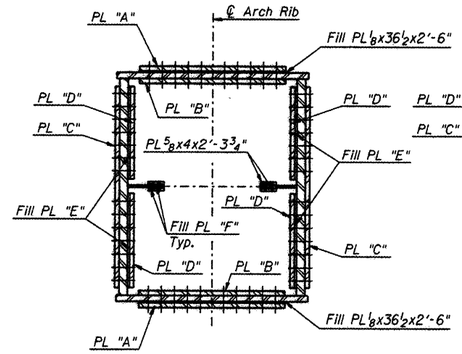

SECTION A-A

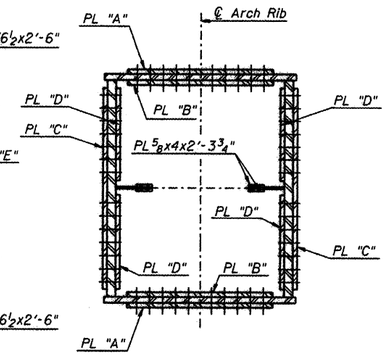

SECTION B-B

RS3 Shown

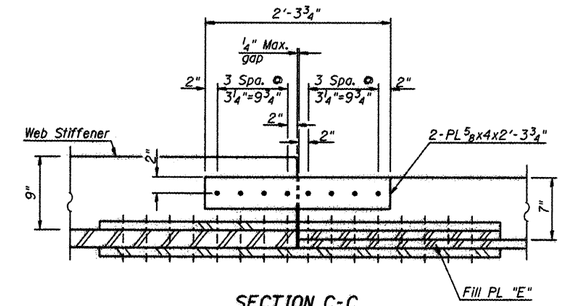

SECTION C-C

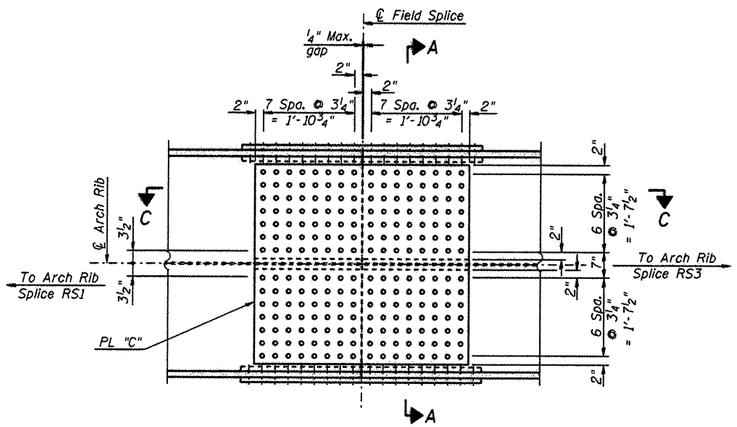

ARCH RIB SPLICE RS2 - WEB SPLICE

(RS9 Opposite Hand)

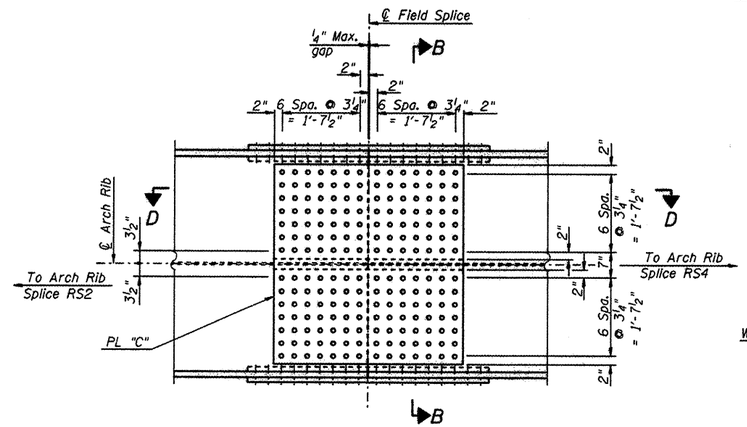

ARCH RIB SPLICE RS3 THRU RS5 - WEB SPLICE

(RS6 Thru RS8 Opposite Hand)
RS3 Shown

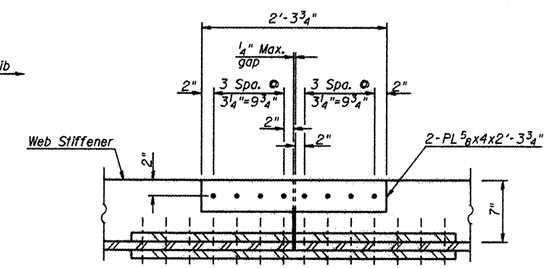

SECTION D-D

TABLE OF FIELD SPLICE DATA

LOCATION	PL "A"	PL "B"	PL "C"	PL "D"	PL "E"	PL "F"
RS2, RS9	1 x 36 1/2" x 5'-0 1/4"	1 x 36 1/2" x 5'-0 1/4"	7/8 x 50 x 4'-5 3/4"	7/8 x 23 1/2" x 4'-5 3/4"	1/2 x 23 1/2" x 2'-2 3/4"	5/16 x 4 x 1'-1 3/4"
RS3, RS8	1 x 36 1/2" x 5'-0 1/4"	1 x 36 1/2" x 5'-0 1/4"	3/4 x 50 x 3'-11 1/4"	3/4 x 23 1/2" x 3'-11 1/4"		
RS4, RS7	1 x 36 1/2" x 5'-0 1/4"	1 x 36 1/2" x 5'-0 1/4"	3/4 x 50 x 3'-11 1/4"	3/4 x 23 1/2" x 3'-11 1/4"		
RS5, RS6	1 x 36 1/2" x 5'-0 1/4"	1 x 36 1/2" x 5'-0 1/4"	3/4 x 50 x 3'-11 1/4"	3/4 x 23 1/2" x 3'-11 1/4"		

Notes:

Bolts shall be 7/8" ϕ high-strength bolts.

Splice plates and fill plates shall conform to the requirements of M270 Gr. 50W T3.

For Arch Rib Elevation and Section Details, See sheets 34 thru 36 of 79.

L:\ROCKFORD\B3268B2\D-m\CADD_Sheets\S_38_Rib Splice Details 2.dgn

CMT CRAWFORD, MURPHY & TILLY, INC. CONSULTING ENGINEERS License No. 184-000613

HNTB

DESIGNED - PA, JDJ, BPD, CJW	REVISED -		
DRAWN - GLD	REVISED -		
CHECKED - RJK	REVISED -		
DATE - 02/04/2011	REVISED -		

CITY OF ROCKFORD
MORGAN STREET BRIDGE

ARCH RIB FIELD SPLICE DETAILS - II
STRUCTURE NO. 101-6108

SCALE: | SHEET NO. 38 OF 79 SHEETS | STA. 47+00.74 TO STA. 52+63.50

F.A.U. RTE.	SECTION	COUNTY	TOTAL SHEETS	SHEET NO.
5077	99-00493-00-BR	WINNEBAGO	253	164
		CONTRACT NO. 85529		

FED. ROAD DIST. NO. 2 | ILLINOIS | FED. AID PROJECT BRM-5099(65)

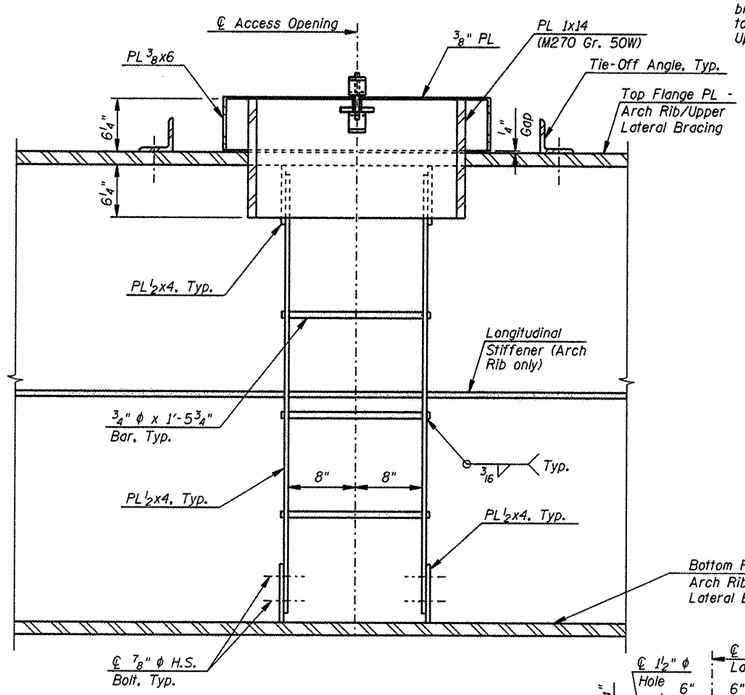

SECTION C-C

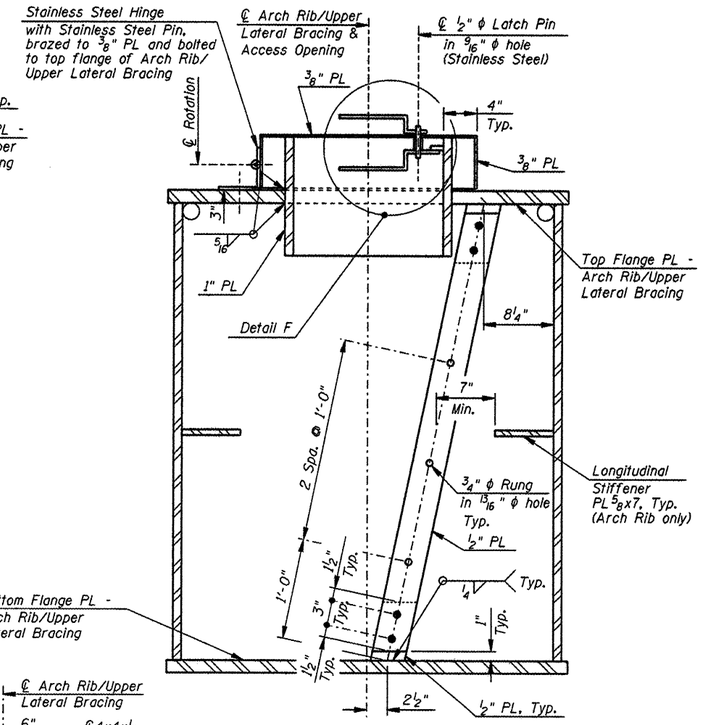

SECTION D-D

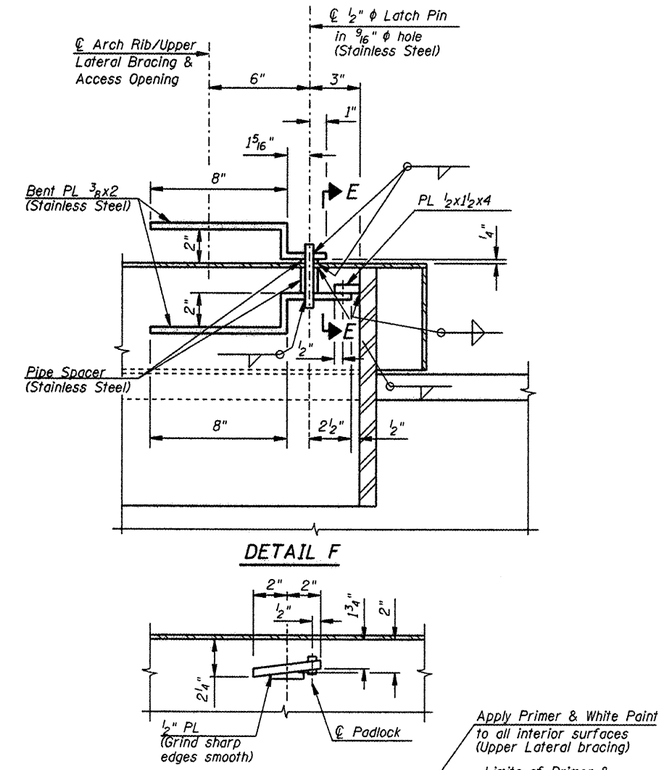

DETAIL F

SECTION E-E

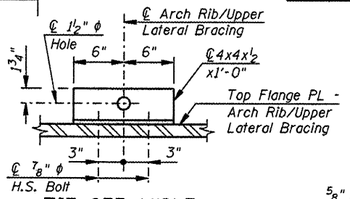

TIE-OFF ANGLE

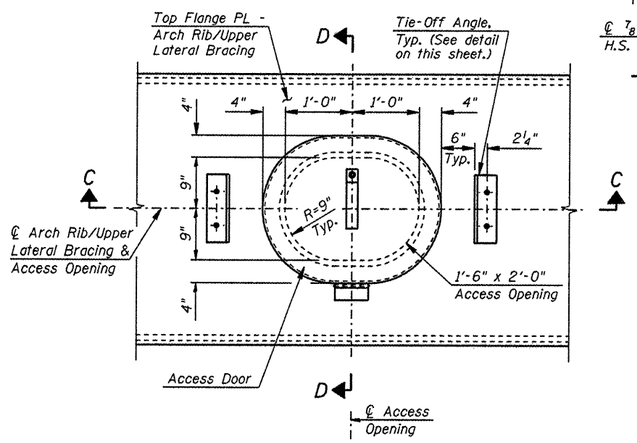

PLAN - ACCESS DOOR

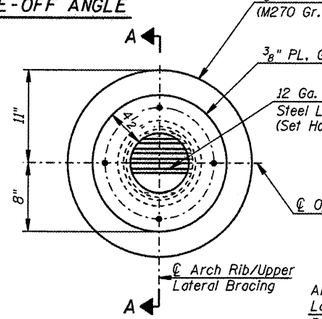

FRONT ELEVATION
Inside Arch Rib/Upper Lateral Bracing

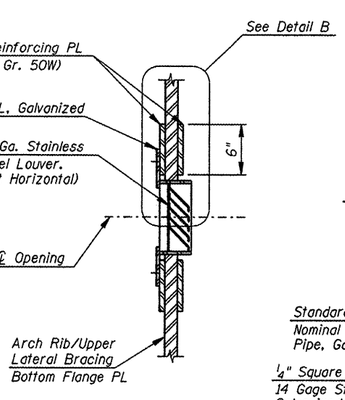

SECTION A-A

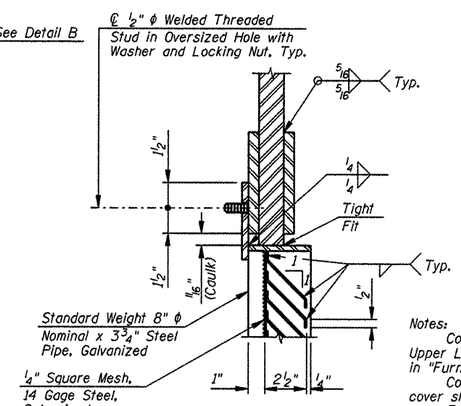

DETAIL B

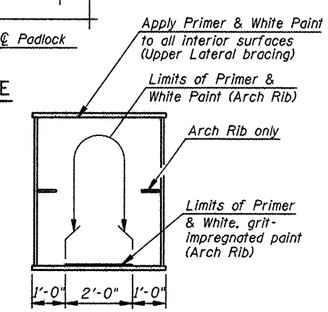

LIMITS OF SURFACE TREATMENT
(INTERIOR OF ARCH RIB/
UPPER LATERAL BRACING)

ARCH RIB/UPPER LATERAL BRACING VENTILATION OPENING DETAILS
20 Required - Arch Rib
10 Required - Upper Lateral Bracing

Notes:

Cost for fabrication and installation of the Arch Rib/ Upper Lateral Bracing Ventilation Openings shall be included in "Furnishing and Erecting Structural Steel".

Cost for fabrication and installation of Ladder and Hatch cover shall be included in "Furnishing and Erecting Structural Steel".

For location of Arch Rib Ventilation Opening, see Sheets 34 thru 36 of 79.

For location of Arch Rib Access Door, see Sheet 40 of 79.

For location of Upper Lateral Bracing Ventilation Opening and Access Door, see Sheet 36 of 79.

All Structural Steel detailed on this sheet shall conform to the requirements of M270 Gr. 50W, unless noted otherwise.

L:\ROCKFORD\06260802\D-ms\C400.Sheets\S.39.Rib Misc Details.dgn

CMT CRAWFORD, MURPHY & TILLY, INC. CONSULTING ENGINEERS License No. 184-000613 ©Copyright CMT, Inc.

HNTB

DESIGNED - PA, JDJ, BPD, CJW	REVISED -		
DRAWN - GLD	REVISED -		
CHECKED - RJK	REVISED -		
DATE - 02/04/2011	REVISED -		

CITY OF ROCKFORD
MORGAN STREET BRIDGE

ARCH RIB /UPPER LATERAL BRACING MISCELLANEOUS DETAILS
STRUCTURE NO. 101-6108

SCALE: | SHEET NO. 39 OF 79 SHEETS | STA. 47+00.74 TO STA. 52+63.50

F.A.U. RTE.	SECTION	COUNTY	TOTAL SHEETS	SHEET NO.
5077	99-00493-00-BR	WINNEBAGO	253	165
		CONTRACT NO. 85529		

FED. ROAD DIST. NO. 2 | ILLINOIS | FED. AID PROJECT BRM-5099(65)

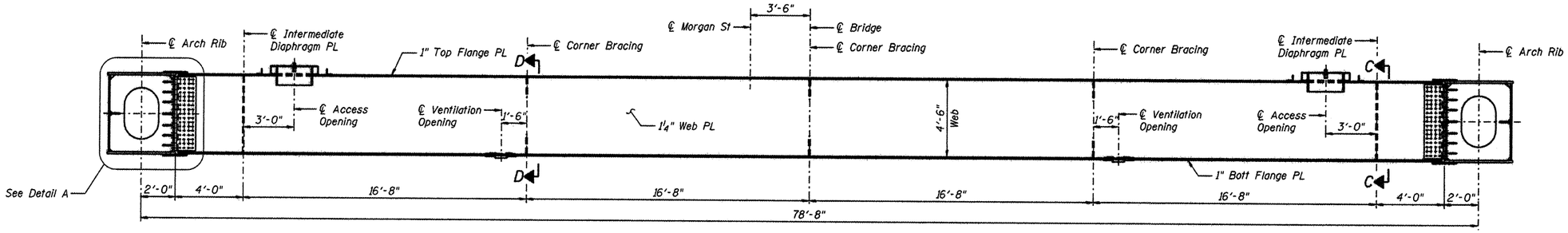

ELEVATION - UPPER LATERAL BRACING

(Looking Upstation)

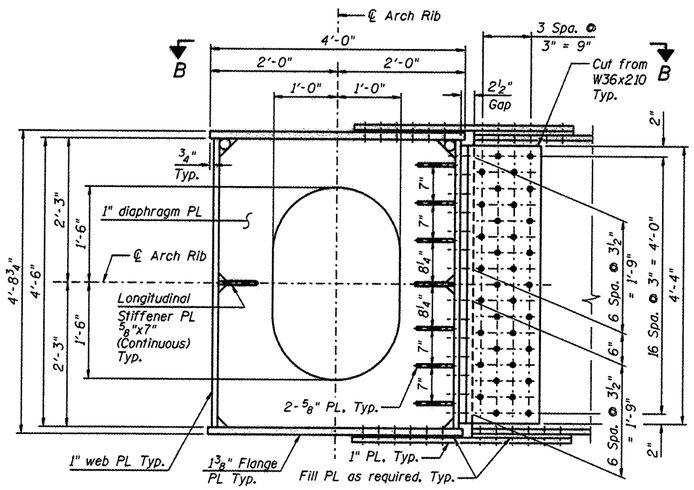

DETAIL A

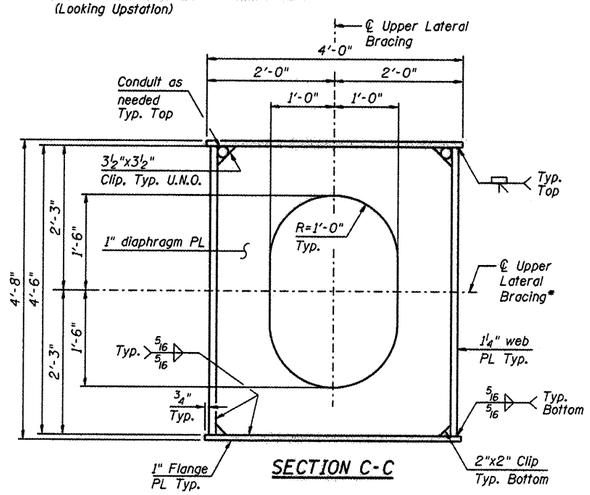

SECTION C-C

* Align ℄ Upper Lateral Bracing with tangent to ℄ Arch Rib at each Upper Lateral Work Point location.

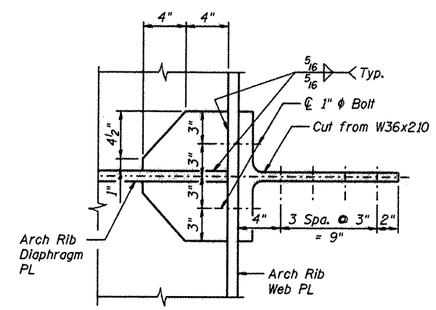

DETAIL E

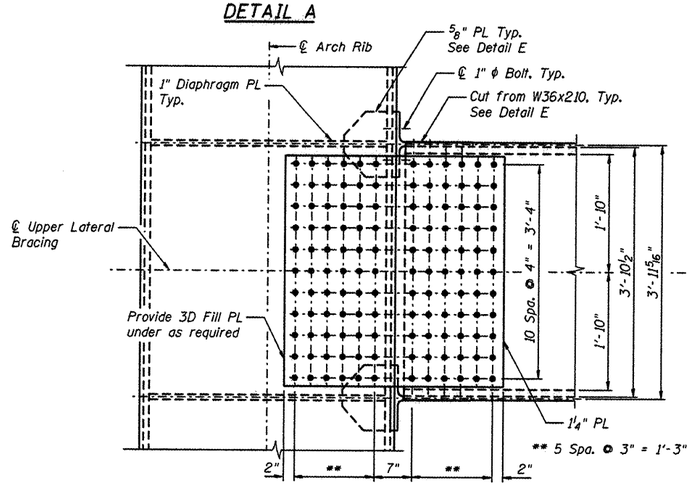

VIEW B-B

(Top flange shown, Bottom flange similar)

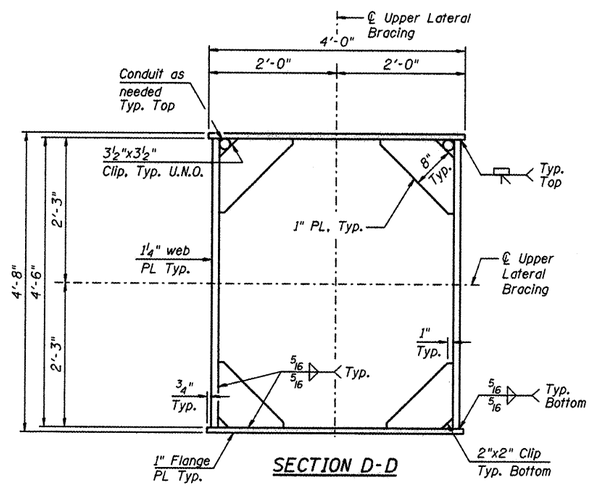

SECTION D-D

Notes:

All bolts shall be ⅞" high strength bolts U.N.O.

Upper Lateral Bracing Flange Plates and Web Plates shall conform to the requirements of AASHTO M270 Gr. 50W T3.

Diaphragms, Connections and Connection Plates shall conform to the requirements of AASHTO M270 Gr. 50W.

See Sheet 26 of 79 for working points of Upper Lateral Bracing.

See Sheet 39 of 79 for Ventilation and Access Opening details.

See sheets 34 thru 39 of 79 for Arch Rib Details.

U.N.O. denotes unless noted otherwise.

L:\ROCKFORD\0828280\Dgn\CADD_Sheets\S_48_Upper Lateral Bracing Details.dgn

CMT ©Copyright CMT, Inc. CRAWFORD, MURPHY & TILLY, INC. CONSULTING ENGINEERS License No. 184-000613

HNTB

DESIGNED - PA, JDJ, BPD, CJW	REVISED -		
DRAWN - GLD	REVISED -		
CHECKED - RJK	REVISED -		
DATE - 02/04/2011	REVISED -		

CITY OF ROCKFORD
MORGAN STREET BRIDGE

UPPER LATERAL BRACING DETAILS
STRUCTURE NO. 101-6108

SCALE: | SHEET NO. 40 OF 79 SHEETS | STA. 47+00.74 TO STA. 52+63.50

F.A.U. RTE.	SECTION	COUNTY	TOTAL SHEETS	SHEET NO.
5077	99-00493-00-BR	WINNEBAGO	253	166

CONTRACT NO. 85529

FED. ROAD DIST. NO. 2 | ILLINOIS | FED. AID PROJECT BRM-5099(65)

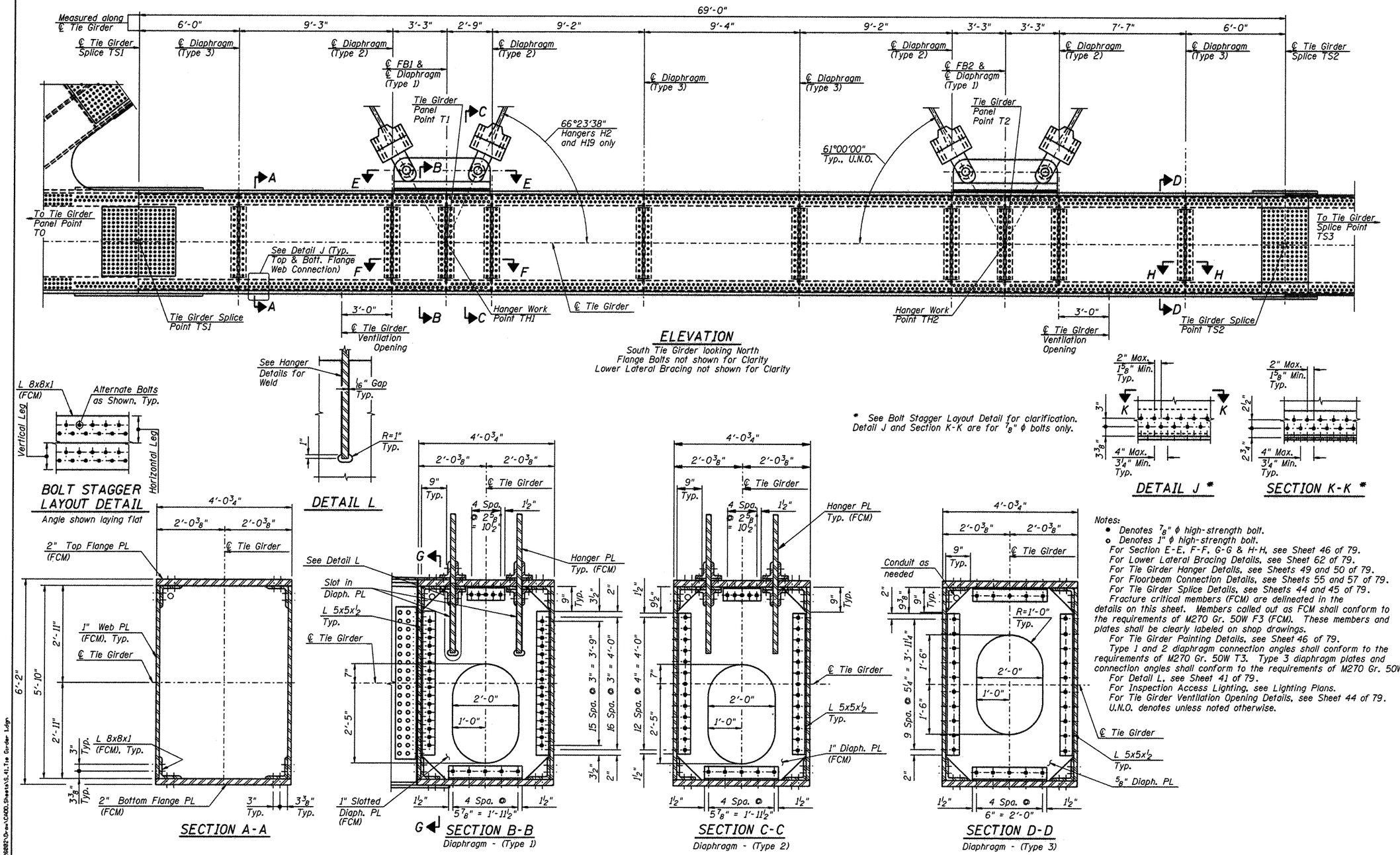

ELEVATION

South Tie Girder looking North
Flange Bolts not shown for Clarity
Lower Lateral Bracing not shown for Clarity

BOLT STAGGER LAYOUT DETAIL

Angle shown laying flat

DETAIL L

DETAIL J *

SECTION K-K *

* See Bolt Stagger Layout Detail for clarification.
Detail J and Section K-K are for 7/8" ϕ bolts only.

SECTION A-A

SECTION B-B

Diaphragm - (Type 1)

SECTION C-C

Diaphragm - (Type 2)

SECTION D-D

Diaphragm - (Type 3)

Notes:

- ● Denotes 7/8" ϕ high-strength bolt.
- ○ Denotes 1" ϕ high-strength bolt.

For Section E-E, F-F, G-G & H-H, see Sheet 46 of 79.
For Lower Lateral Bracing Details, see Sheet 62 of 79.
For Tie Girder Hanger Details, see Sheets 49 and 50 of 79.
For Floorbeam Connection Details, see Sheets 55 and 57 of 79.
For Tie Girder Splice Details, see Sheets 44 and 45 of 79.
Fracture critical members (FCM) are delineated in the details on this sheet. Members called out as FCM shall conform to the requirements of M270 Gr. 50W F3 (FCM). These members and plates shall be clearly labeled on shop drawings.
For Tie Girder Painting Details, see Sheet 46 of 79.
Type 1 and 2 diaphragm connection angles shall conform to the requirements of M270 Gr. 50W T3. Type 3 diaphragm plates and connection angles shall conform to the requirements of M270 Gr. 50W.
For Detail L, see Sheet 41 of 79.
For Inspection Access Lighting, see Lighting Plans.
For Tie Girder Ventilation Opening Details, see Sheet 44 of 79.
U.N.O. denotes unless noted otherwise.

L:\ROCKFORD\0826868\Drawings\CADD_Sheets\S-41_Tie Girder Ldgn

CMT ©Copyright CMT, Inc.
CRAWFORD, MURPHY & TILLY, INC.
CONSULTING ENGINEERS
License No. 184-000613

HNTB

DESIGNED - PA, JDJ, BPD, CJW	REVISED -		
DRAWN - GLD	REVISED -		
CHECKED - RJK	REVISED -		
DATE - 02/04/2011	REVISED -		

CITY OF ROCKFORD
MORGAN STREET BRIDGE

TIE GIRDER TS1 TO TS2 AND TS6 TO TS5
STRUCTURE NO. 101-6108

SCALE: | SHEET NO. 41 OF 79 SHEETS | STA. 47+00.74 TO STA. 52+63.50

F.A.U. RTE.	SECTION	COUNTY	TOTAL SHEETS	SHEET NO.
5077	99-00493-00-BR	WINNEBAGO	253	167
		CONTRACT NO. 85529		

FED. ROAD DIST. NO. 2 | ILLINOIS | FED. AID PROJECT BRM-5099(65)

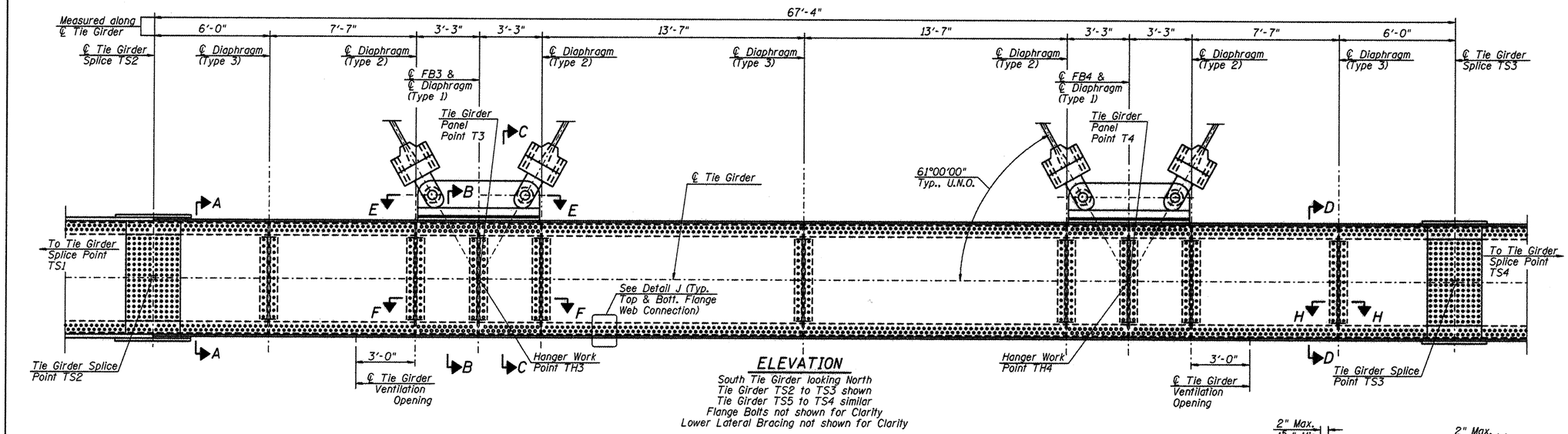

ELEVATION

South Tie Girder looking North
Tie Girder TS2 to TS3 shown
Tie Girder TS5 to TS4 similar
Flange Bolts not shown for Clarity
Lower Lateral Bracing not shown for Clarity

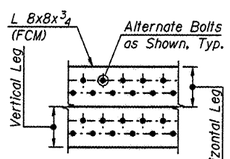

BOLT STAGGER LAYOUT DETAIL

Angle shown laying flat

* See Bolt Stagger Layout Detail for clarification. Detail J and Section K-K are for 7/8" ϕ bolts only.

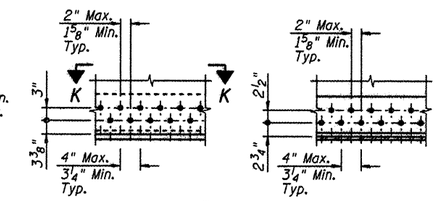

DETAIL J *

SECTION K-K *

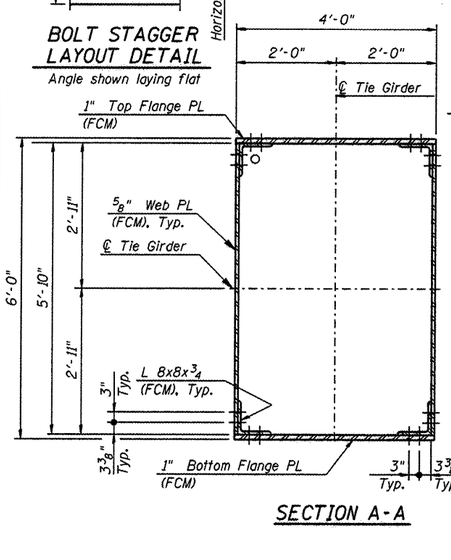

SECTION A-A

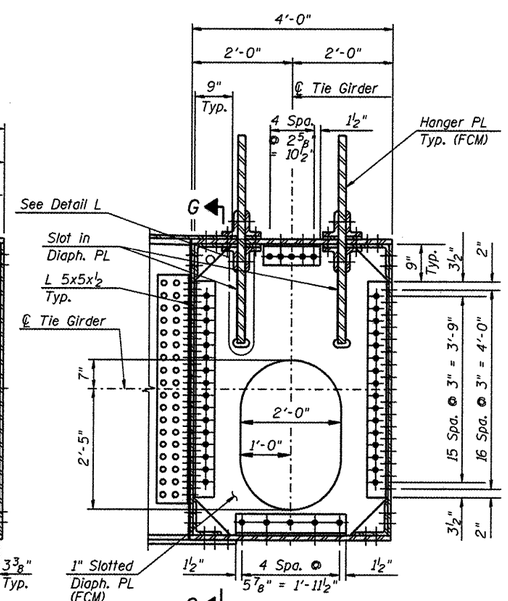

SECTION B-B

Diaphragm - (Type 1)

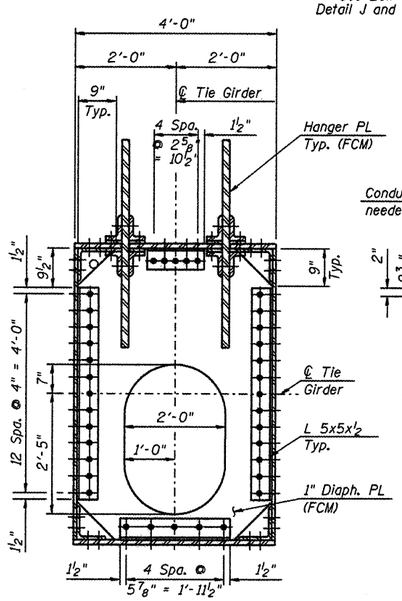

SECTION C-C

Diaphragm - (Type 2)

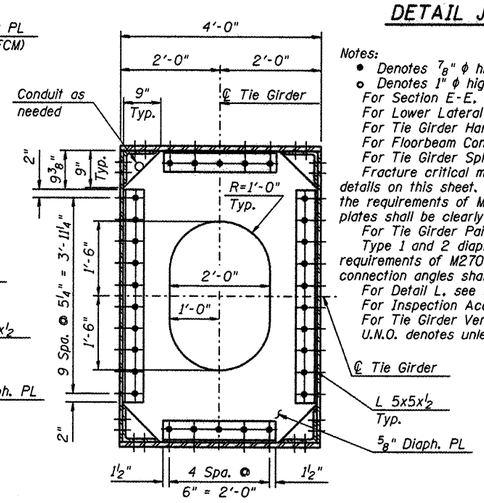

SECTION D-D

Diaphragm - (Type 3)

Notes:

- ● Denotes 7/8" ϕ high-strength bolt.
- ○ Denotes 1" ϕ high-strength bolt.

For Section E-E, F-F, G-G & H-H, see Sheet 46 of 79.
For Lower Lateral Bracing Details, see Sheet 62 of 79.
For Tie Girder Hanger Details, see Sheets 49 and 50 of 79.
For Floorbeam Connection Details, see Sheets 55 and 57 of 79.
For Tie Girder Splice Details, see Sheets 44 and 45 of 79.
Fracture critical members (FCM) are delineated in the details on this sheet. Members called out as FCM shall conform to the requirements of M270 Gr. 50W F3 (FCM). These members and plates shall be clearly labeled on shop drawings.
For Tie Girder Painting Details, see Sheet 46 of 79.
Type 1 and 2 diaphragm connection angles shall conform to the requirements of M270 Gr. 50W T3. Type 3 diaphragm plates and connection angles shall conform to the requirements of M270 Gr. 50W.
For Detail L, see Sheet 41 of 79.
For Inspection Access Lighting, see Lighting Plans.
For Tie Girder Ventilation Opening Details, see Sheet 44 of 79.
U.N.O. denotes unless noted otherwise.

L:\ROCKFORD\0808882\Ds-ex\CADD.Sheets\S.42.Tie Girder 2.dgn

CMT CRAWFORD, MURPHY & TILLY, INC. CONSULTING ENGINEERS License No. 184-000613

HNTB

DESIGNED - PA, JDJ, BPD, CJW	REVISED -		
DRAWN - GLD	REVISED -		
CHECKED - RJK	REVISED -		
DATE - 02/04/2011	REVISED -		

CITY OF ROCKFORD
MORGAN STREET BRIDGE

TIE GIRDER TS2 TO TS3 AND TS5 TO TS4
STRUCTURE NO. 101-6108

SCALE: | SHEET NO. 42 OF 79 SHEETS | STA. 47+00.74 TO STA. 52+63.50

F.A.U. RTE.	SECTION	COUNTY	TOTAL SHEETS	SHEET NO.
5077	99-00493-00-BR	WINNEBAGO	253	168
		CONTRACT NO. 85529		

FED. ROAD DIST. NO. 2 | ILLINOIS | FED. AID PROJECT BRM-5099(65)

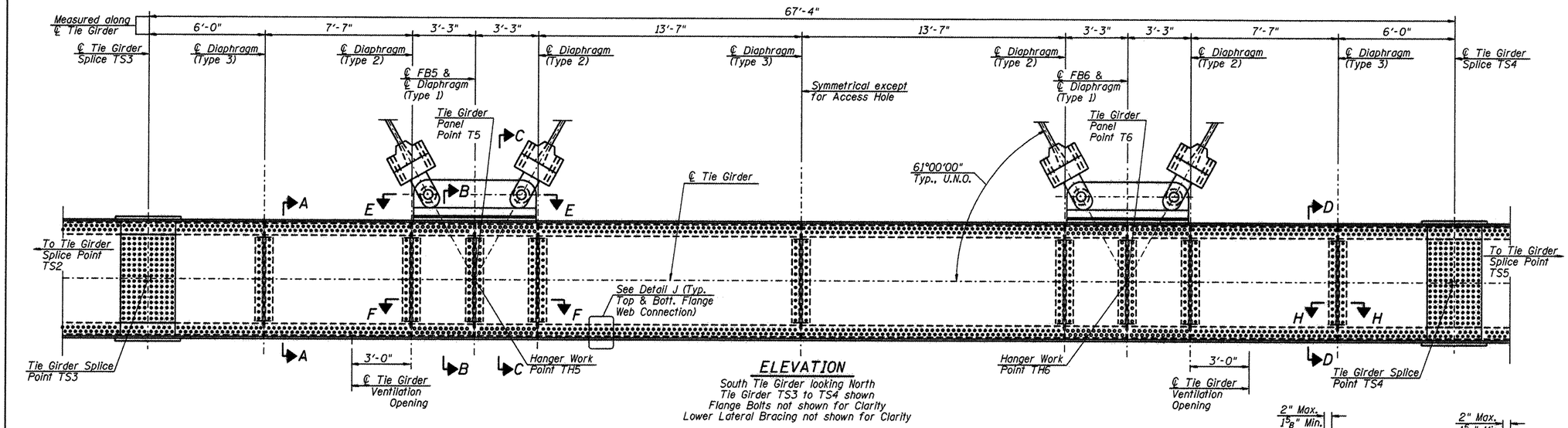

ELEVATION

South Tie Girder looking North
Tie Girder TS3 to TS4 shown
Flange Bolts not shown for Clarity
Lower Lateral Bracing not shown for Clarity

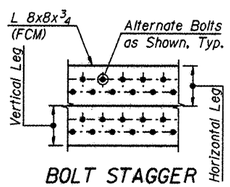

BOLT STAGGER LAYOUT DETAIL

Angle shown laying flat

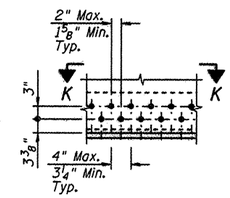

DETAIL J *

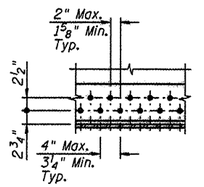

SECTION K-K *

* See Bolt Stagger Layout Detail for clarification.
Detail J and Section K-K are for ⅞" ϕ bolts only.

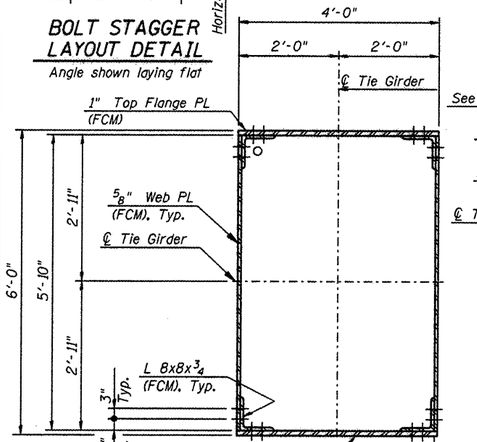

SECTION A-A

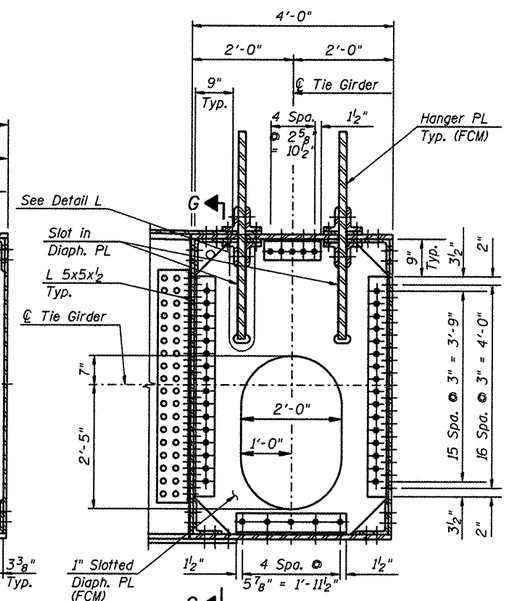

SECTION B-B

Diaphragm - (Type 1)

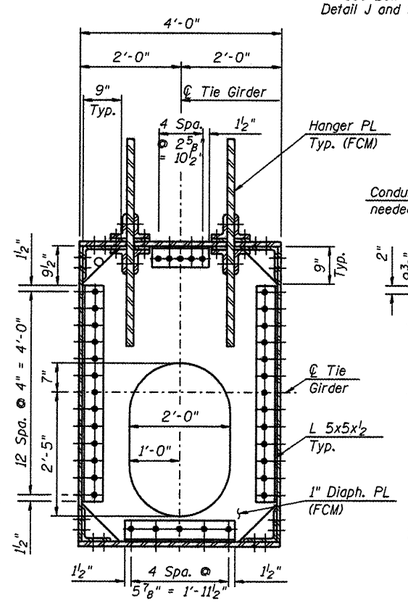

SECTION C-C

Diaphragm - (Type 2)

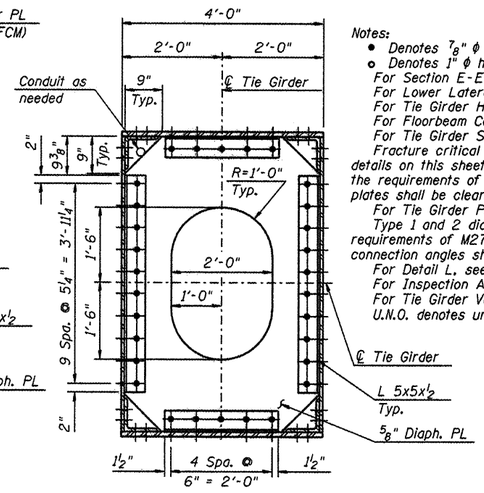

SECTION D-D

Diaphragm - (Type 3)

Notes:

- ● Denotes ⅞" ϕ high-strength bolt.
- ○ Denotes 1" ϕ high-strength bolt.

For Section E-E, F-F, G-G & H-H, see Sheet 46 of 79.
For Lower Lateral Bracing Details, see Sheet 62 of 79.
For Tie Girder Hanger Details, see Sheets 49 and 50 of 79.
For Floorbeam Connection Details, see Sheets 55 and 57 of 79.
For Tie Girder Splice Details, see Sheets 44 and 45 of 79.
Fracture critical members (FCM) are delineated in the details on this sheet. Members called out as FCM shall conform to the requirements of M270 Gr. 50W F3 (FCM). These members and plates shall be clearly labeled on shop drawings.
For Tie Girder Painting Details, see Sheet 46 of 79.
Type 1 and 2 diaphragm connection angles shall conform to the requirements of M270 Gr. 50W T3. Type 3 diaphragm plates and connection angles shall conform to the requirements of M270 Gr. 50W.
For Detail L, see Sheet 41 of 79.
For Inspection Access Lighting, see Lighting Plans.
For Tie Girder Ventilation Opening Details, see Sheet 44 of 79.
U.N.O. denotes unless noted otherwise.

L:\ROCKFORD\0826886\Open\CADD\Sheets\S-43_Tie Girder 3.dgn

CMT ©Copyright CMT, Inc.
CRAWFORD, MURPHY & TILLY, INC.
CONSULTING ENGINEERS
License No. 184-000613

HNTB

DESIGNED - PA, JDJ, BPD, CJW	REVISED -		
DRAWN - GLD	REVISED -		
CHECKED - RJK	REVISED -		
DATE - 02/04/2011	REVISED -		

CITY OF ROCKFORD
MORGAN STREET BRIDGE

TIE GIRDER TS3 TO TS4
STRUCTURE NO. 101-6108

SCALE: | SHEET NO. 43 OF 79 SHEETS | STA. 47+00.74 TO STA. 52+63.50

F.A.U. RTE.	SECTION	COUNTY	TOTAL SHEETS	SHEET NO.
5077	99-00493-00-BR	WINNEBAGO	253	169
		CONTRACT NO. 85529		

FED. ROAD DIST. NO. 2 | ILLINOIS | FED. AID PROJECT BRM-5099(65)

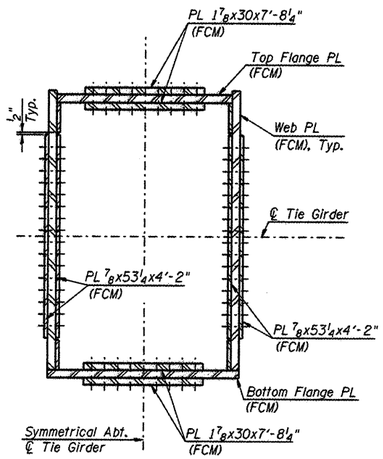

SECTION A-A

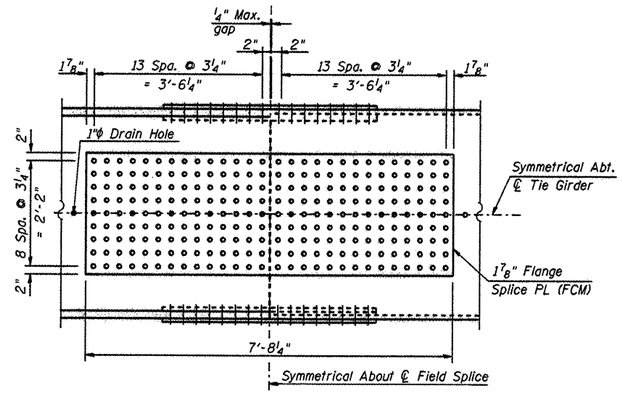

TOP & BOTTOM FLANGE SPLICE TS1

(TS6 Opposite Hand)

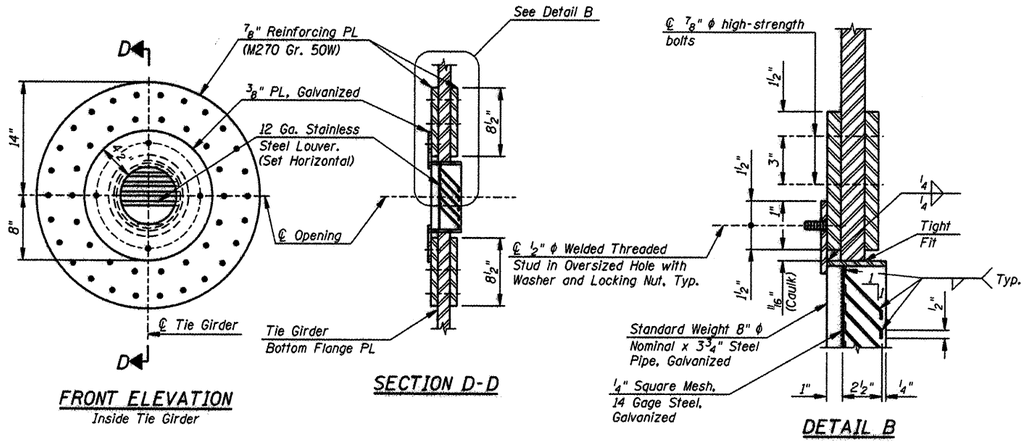

FRONT ELEVATION

Inside Tie Girder

SECTION D-D

DETAIL B

TIE GIRDER VENTILATION OPENING DETAILS

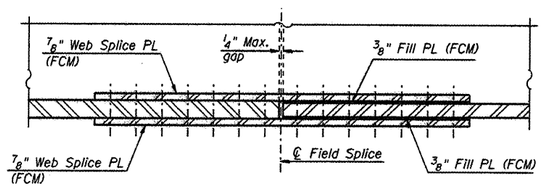

SECTION B-B

Notes:

Cost for fabrication and installation of the Tie Girder Ventilation Openings shall be included in "Furnishing and Erecting Structural Steel".

For location of Tie Girder Ventilation Openings, see Sheets 41 thru 43 of 79.

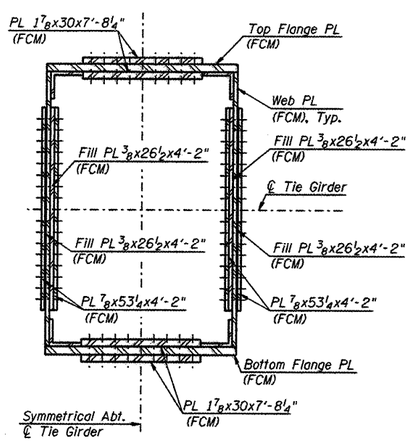

SECTION C-C

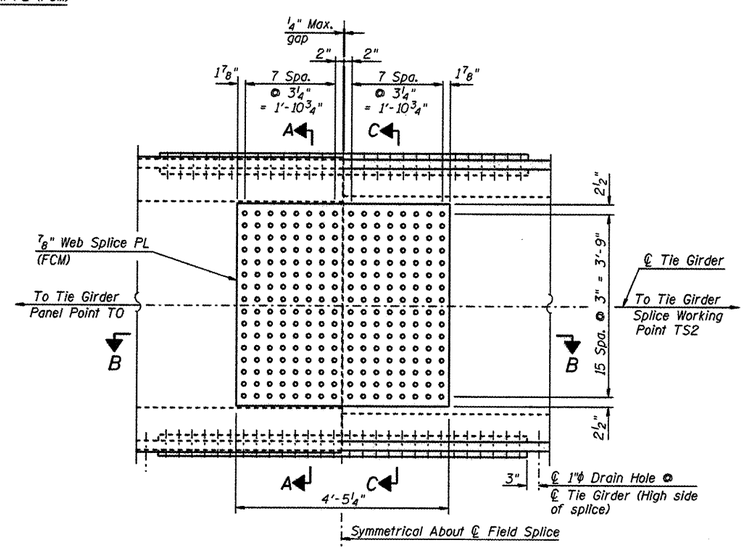

TIE GIRDER SPLICE TS1 - WEB SPLICE

(TS6 Opposite Hand)

Notes:

Fracture Critical Members (FCM) are delineated in the details on this sheet. Members called out as FCM shall be M270 Gr. 50W F3(FCM). These members and plates shall be clearly labeled on shop drawings.

Bolts shall be 7/8" φ high-strength bolts.

For Tie Girder Splices TS2 thru TS5, see Sheet 44 of 79.

For Tie Girder Details, see Sheets 41 thru 43 and 46 of 79.

L:\ROCKFORD\08258982\Dgn\C400_Sheets\S_44_Tie Girder Splice Details.dgn

CMT ©Copyright CMT, Inc. CRAWFORD, MURPHY & TILLY, INC. CONSULTING ENGINEERS License No. 184-000613	HNTB	DESIGNED - PA, JDJ, BPD, CJW	REVISED -	CITY OF ROCKFORD MORGAN STREET BRIDGE	TIE GIRDER SPLICE DETAILS - I STRUCTURE NO. 101-6108	F.A.U. RTE.	SECTION	COUNTY	TOTAL SHEETS	SHEET NO.
		DRAWN - GLD	REVISED -			5077	99-00493-00-BR	WINNEBAGO	253	170
		CHECKED - RJK	REVISED -					CONTRACT NO. 85529		
		DATE - 02/04/2011	REVISED -		SCALE: / SHEET NO. 44 OF 79 SHEETS / STA. 47+00.74 TO STA. 52+63.50	FED. ROAD DIST. NO. 2	ILLINOIS	FED. AID PROJECT BRM-5099(65)		

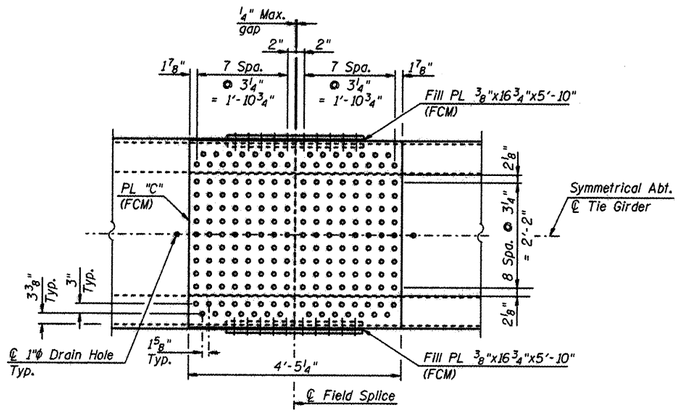

TOP VIEW-TS2 TOP & BOTTOM FLANGE SPLICE

(TS5 Opposite Hand)

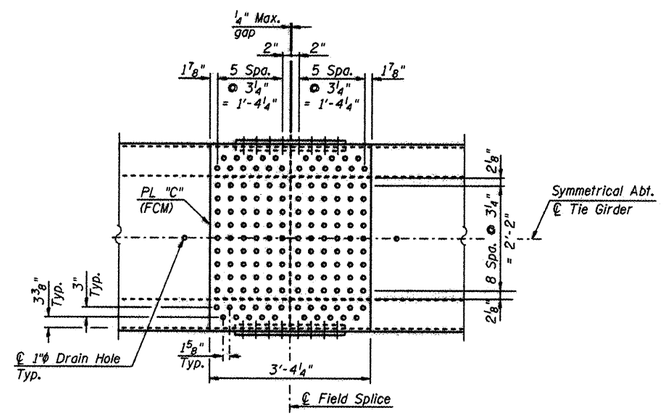

TOP VIEW-TS3 TOP & BOTTOM FLANGE SPLICE

(TS4 Opposite Hand)

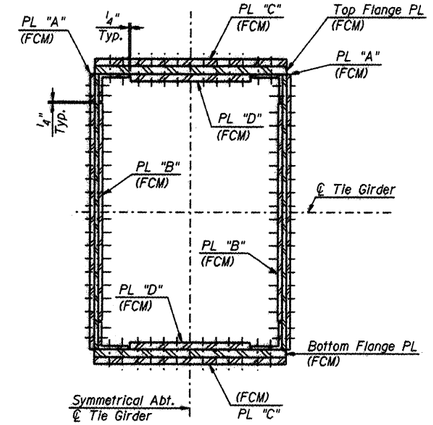

SECTION A-A

SPLICE PLATE DIMENSIONS				
LOCATION	A	B	C	D
TS2, TS5	3/4x33 3/4x5'-10"	3/4x33 3/4x4'-5 1/2"	7/8x48x4'-5 1/4"	7/8x30 1/4x4'-5 1/4"
TS3, TS4	1/2x33 3/4x5'-10"	1/2x33 3/4x4'-5 1/2"	7/8x48x3'-4 1/4"	7/8x30 1/4x3'-4 1/4"

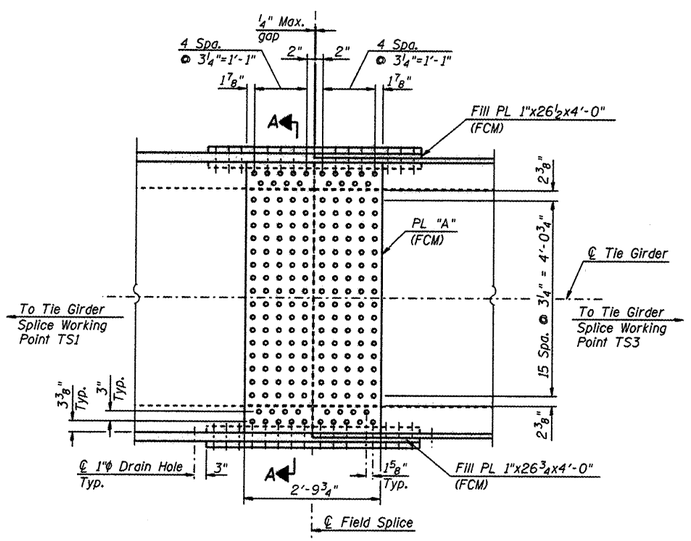

TIE GIRDER SPLICE TS2 - WEB SPLICE

(TS5 Opposite Hand)

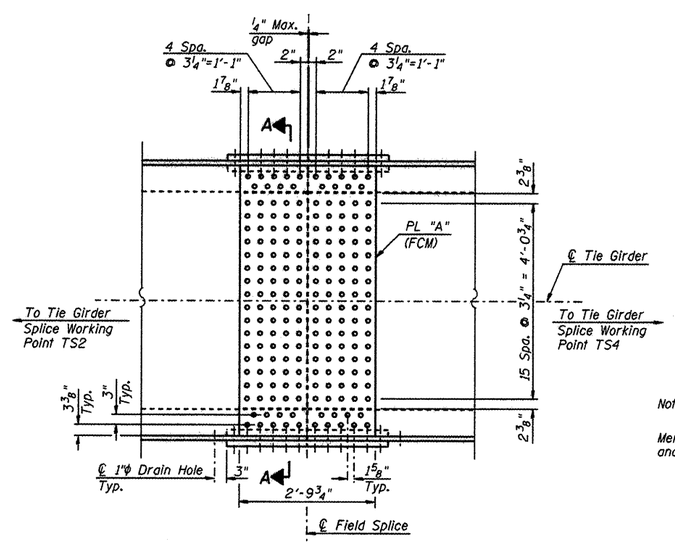

TIE GIRDER SPLICE TS3 - WEB SPLICE

(TS4 Opposite Hand)

Notes:

Fracture Critical Members (FCM) are delineated in the details on this sheet. Members called out as FCM shall be M270 Gr. 50W F3(FCM). These members and plates shall be clearly labeled on shop drawings.

Bolts shall be 7/8" φ high-strength bolts.

For Tie Girder Splices TS1 and TS6, see Sheet 44 of 79.

For Tie Girder Details, see Sheets 41 thru 43 and 46 of 79.

L:\ROCKFORD\B2628982\D-ew\CADD.Sheets\S_45_Tie Girder Splice Details 2.dgn

CMT CRAWFORD, MURPHY & TILLY, INC. CONSULTING ENGINEERS License No. 184-000613

HNTB

DESIGNED - PA, JDJ, BPD, CJW	REVISED -		
DRAWN - GLD	REVISED -		
CHECKED - RJK	REVISED -		
DATE - 02/04/2011	REVISED -		

CITY OF ROCKFORD
MORGAN STREET BRIDGE

TIE GIRDER SPLICE DETAILS - II
STRUCTURE NO. 101-6108

SCALE: | SHEET NO. 45 OF 79 SHEETS | STA. 47+00.74 TO STA. 52+63.50

F.A.U. RTE.	SECTION	COUNTY	TOTAL SHEETS	SHEET NO.
5077	99-00493-00-BR	WINNEBAGO	253	171
		CONTRACT NO. 85529		

FED. ROAD DIST. NO. 2 | ILLINOIS | FED. AID PROJECT BRM-5099(65)

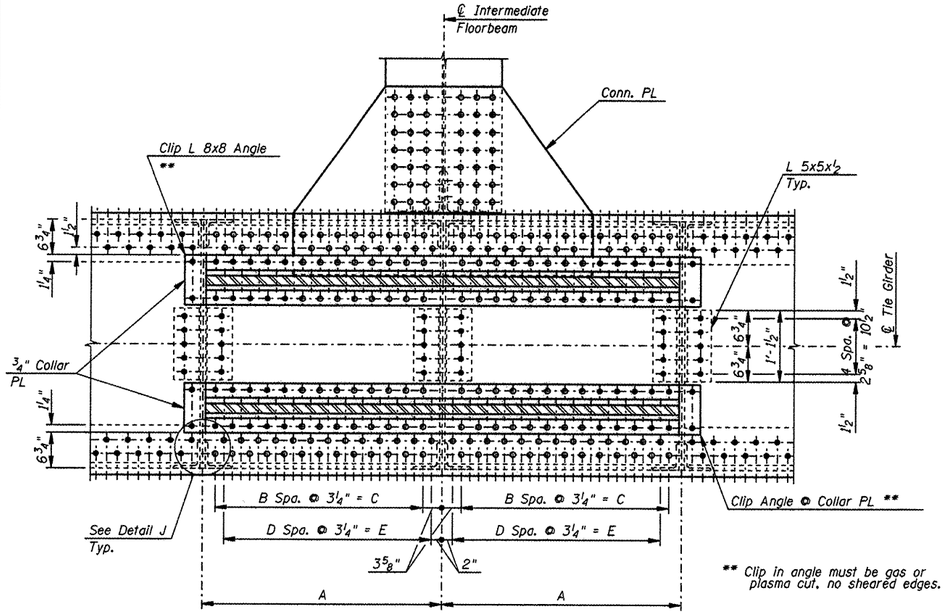

SECTION E-E

Shown @ Hanger Work Point TH1
Other Locations Similar - See Table of Dimensions on this Sheet.

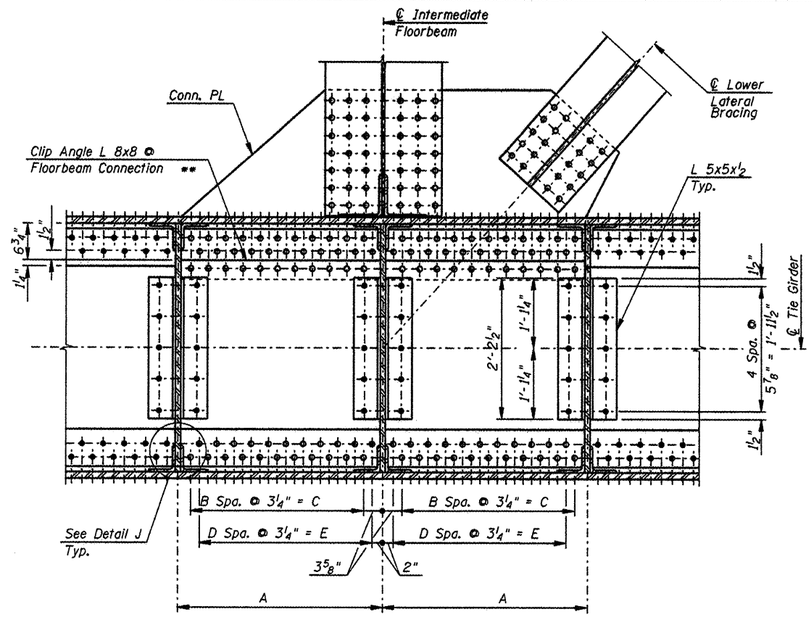

SECTION F-F

Shown @ Hanger Work Point TH1
Other Locations Similar - See Table of Dimensions on this Sheet.

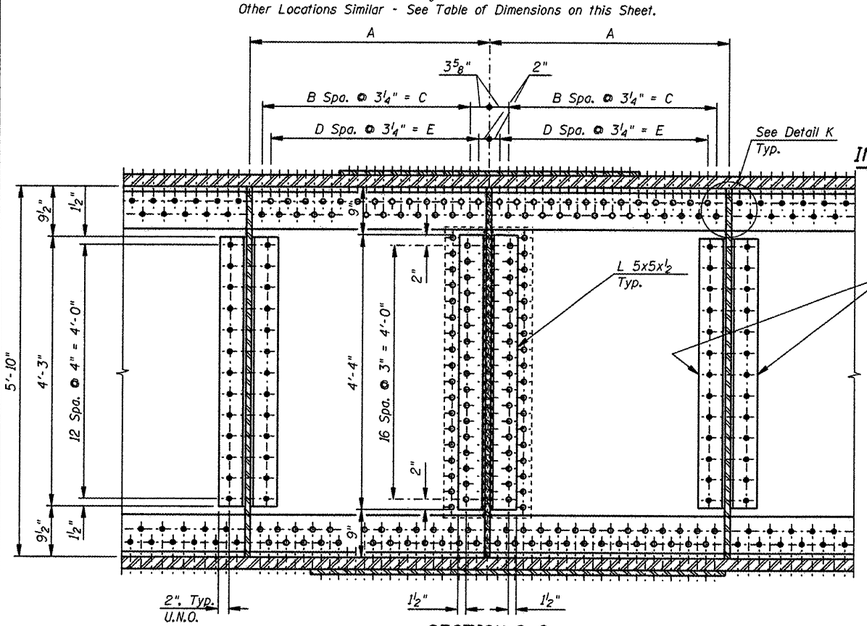

SECTION G-G

Shown @ Hanger Work Point TH1
Other Locations Similar - See Table of Dimensions on this Sheet.

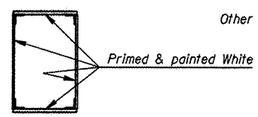

TIE GIRDER INTERIOR PAINT DETAIL

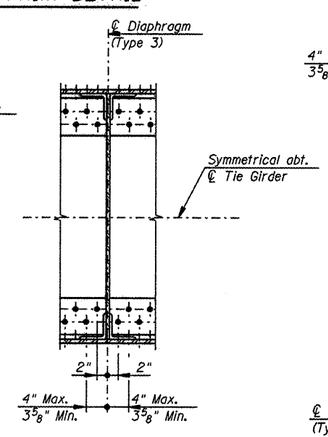

SECTION H-H

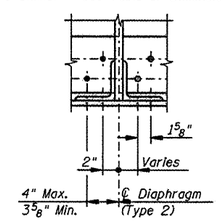

DETAIL J

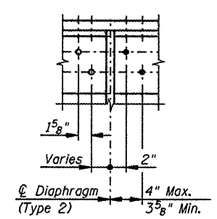

DETAIL K

TABLE OF DIMENSIONS

HANGER WORK POINT AT SPRING LINE TH(n)	A*	B	C	D	E
TH1 (Hanger H1)	3'-3"	10	2'-8½"	10	2'-8½"
TH1 (Hanger H2)	2'-9"	8	2'-2"	8	2'-2"
TH2 Thru TH9	3'-3"	10	2'-8½"	10	2'-8½"
TH10 (Hanger H19)	2'-9"	8	2'-2"	8	2'-2"
TH10 (Hanger H20)	3'-3"	10	2'-8½"	10	2'-8½"

* Dimension "A" Measured along ℄ Tie Girder

Notes:
- •Denotes ⅞" ϕ high-strength bolt.
- ○Denotes 1" ϕ high-strength bolt.
- For Tie Girder Hanger Details, see Sheets 49 and 50 of 79.
- For Top of Floorbeam Connection Details, see Sheets 56 and 57 of 79.
- For Bottom of Floorbeam Connection Details, see Lower Lateral Bracing Details, on Sheet 62 of 79.
- U.N.O. denotes unless noted otherwise.
- For Locations of Sections E-E, F-F, G-G and H-H, see Sheets 41 thru 43 of 79.

CMT ©Copyright CMT, Inc.
CRAWFORD, MURPHY & TILLY, INC.
CONSULTING ENGINEERS
License No. 184-000613

HNTB

DESIGNED - PA, JDJ, BPD, CJW	REVISED -		
DRAWN - GLD	REVISED -		
CHECKED - RJK	REVISED -		
DATE - 02/04/2011	REVISED -		

CITY OF ROCKFORD
MORGAN STREET BRIDGE

TIE GIRDER MISCELLANEOUS DETAILS
STRUCTURE NO. 101-6108

SCALE: | SHEET NO. 46 OF 79 SHEETS | STA. 47+00.74 TO STA. 52+63.50

F.A.U. RTE.	SECTION	COUNTY	TOTAL SHEETS	SHEET NO.
5077	99-00493-00-BR	WINNEBAGO	253	172

CONTRACT NO. 85529

FED. ROAD DIST. NO. 2 | ILLINOIS | FED. AID PROJECT BRM-5099(65)

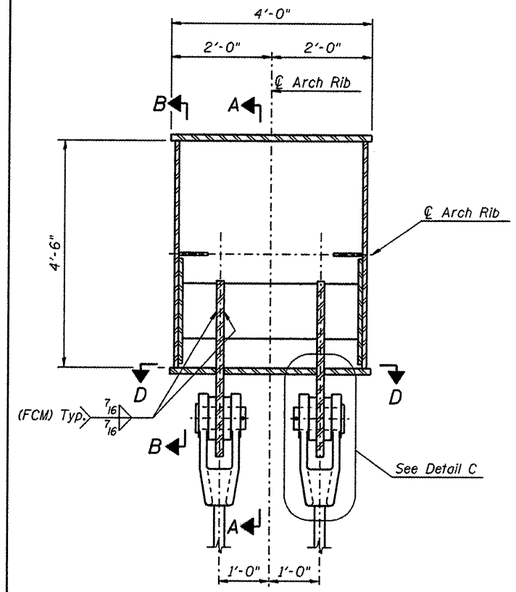

HANGER CONNECTION DETAIL

Typical at locations R1, R3 thru R16 and R18
Shown @ Hanger Work Point R7
other locations similar

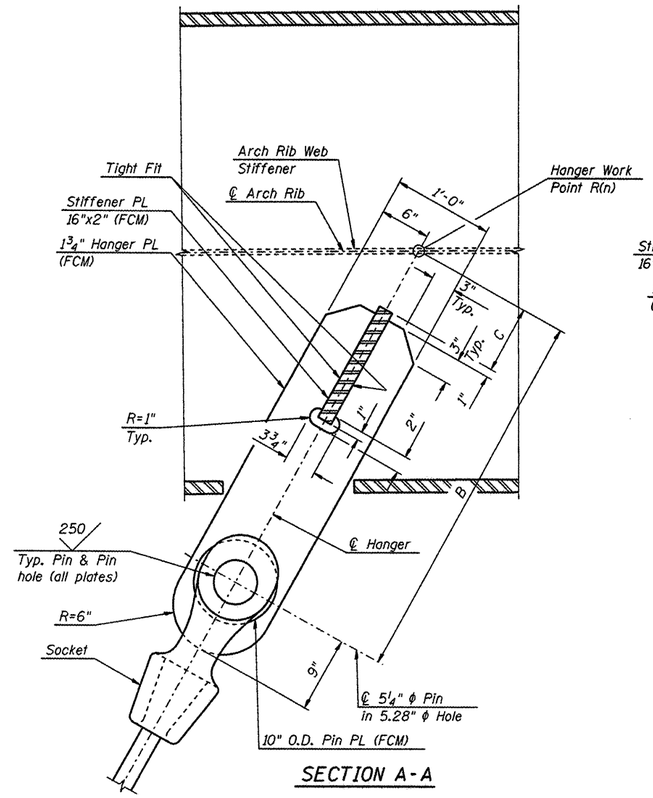

SECTION A-A

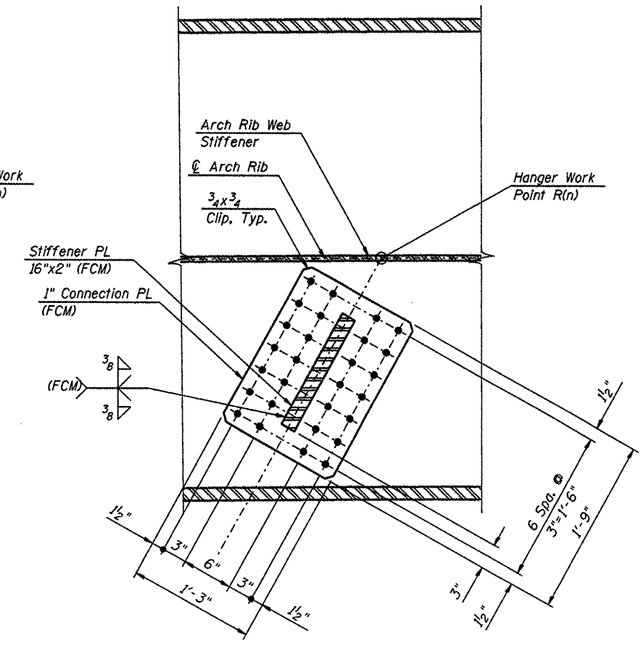

SECTION B-B

TABLE OF DIMENSIONS		
HANGER WORK POINT R(n)	B	C
R1	3'-3 1/8"	5 9/16"
R3	3'-2 9/16"	5 1/2"
R4	4'-11 9/16"	1'-0 3/4"
R5	3'-2 15/16"	5 5/8"
R6	3'-4 1/8"	6"
R7	4'-2 13/16"	9 11/16"
R8	3'-6 5/16"	6 11/16"
R9	3'-9 3/4"	7 13/16"
R10	3'-9 3/4"	7 13/16"
R11	3'-6 5/16"	6 11/16"
R12	4'-2 13/16"	9 11/16"
R13	3'-4 1/8"	6"
R14	3'-2 15/16"	5 5/8"
R15	4'-11 9/16"	1'-0 3/4"
R16	3'-2 9/16"	5 1/2"
R18	3'-3 1/8"	5 9/16"

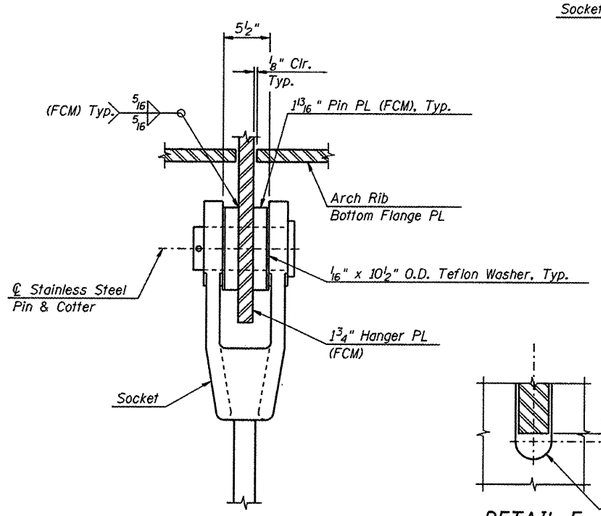

DETAIL C

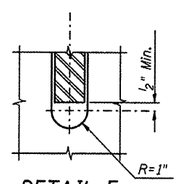

DETAIL E

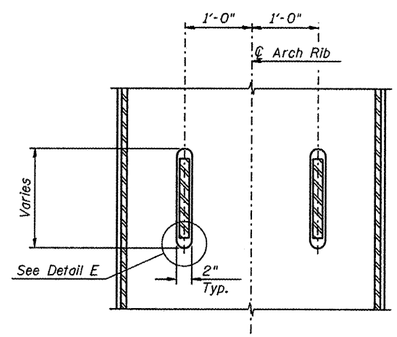

SECTION D-D

Notes:

Fracture Critical Members (FCM) are delineated in the details on this sheet. Members called out as FCM shall conform to the requirements of M270 Gr. 50W F3 (FCM). These members shall be clearly labeled on shop drawings.

Magnetic particle inspection by the yoke method is required on welds to Fracture Critical Members.

Cotter and pins shall conform to the requirements of ASTM A276, A304N stainless steel with Fy = 35 ksi.

Dimensions for socket connection to hanger plate are based on the Open Strand Socket, 2400 Series as manufactured by Clodfelter Bridge and Structures International, Inc. Details from other manufacturers - Muncy Machine and Tool Company, Mucy PA or The Crosby Group LLC, Tulsa, OK may differ. Socket shop drawings and calculations, sealed by a registered structural engineer in the State of Illinois, must be sent to the Engineer for approval.

For Arch Rib Details, see Sheets 34 thru 39 of 79.

All bolts shall be 7/8" ϕ high-strength bolts.

For additional Arch Rib Hanger Details, see Sheet 48 of 79.

For Hanger Details at hanger work points R2 and R17, see Sheet 48 of 79.

L:\ROCKFORD\0826080\Dgns\CADD_Sheets\S_47_Rib Hanger Details 1.dgn

CMT
CRAWFORD, MURPHY & TILLY, INC.
CONSULTING ENGINEERS
License No. 184-000613

HNTB

DESIGNED	PA, JDJ, BPD, CJW	REVISED	-
DRAWN	GLD	REVISED	-
CHECKED	RJK	REVISED	-
DATE	02/04/2011	REVISED	-

CITY OF ROCKFORD
MORGAN STREET BRIDGE

ARCH RIB HANGER DETAILS - I
STRUCTURE NO. 101-6108

SCALE: | SHEET NO. 47 OF 79 SHEETS | STA. 47+00.74 TO STA. 52+63.50

F.A.U. RTE.	SECTION	COUNTY	TOTAL SHEETS	SHEET NO.
5077	99-00493-00-BR	WINNEBAGO	253	173

CONTRACT NO. 85529

FED. ROAD DIST. NO. 2 | ILLINOIS | FED. AID PROJECT BRM-5099(65)

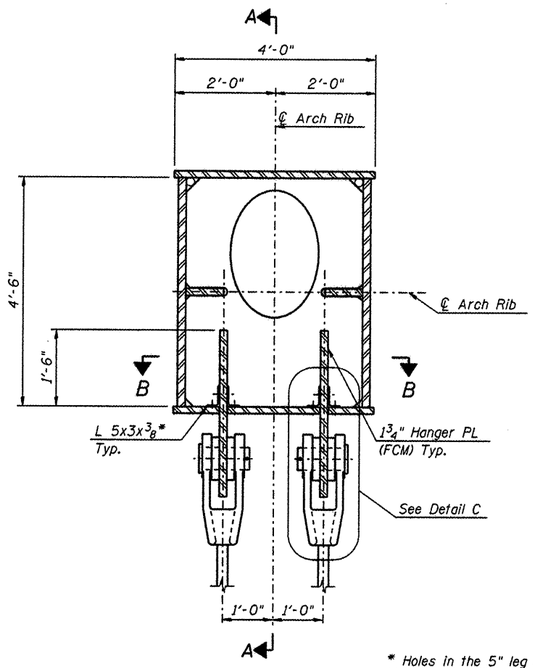

* Holes in the 5" leg shall be oversized.
Holes in the 3" leg shall be standard holes.

HANGER CONNECTION DETAIL

Typical at locations R2 and R17

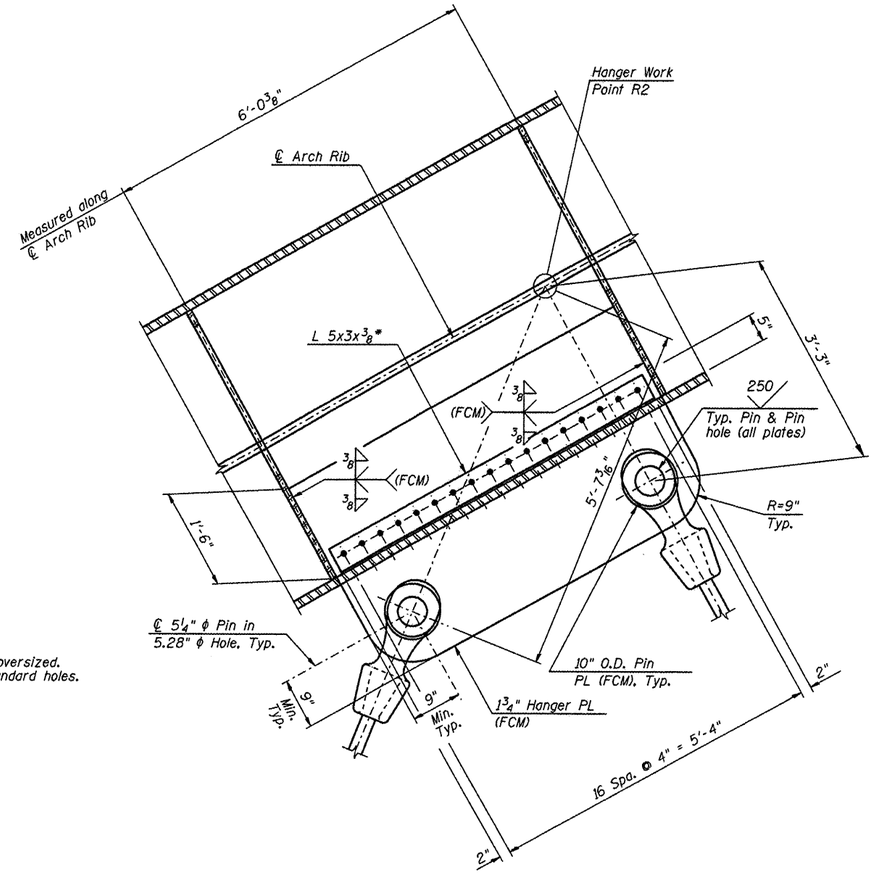

SECTION A-A

Shown @ Hanger Work Point R2
Hanger Work Point R17 opposite hand

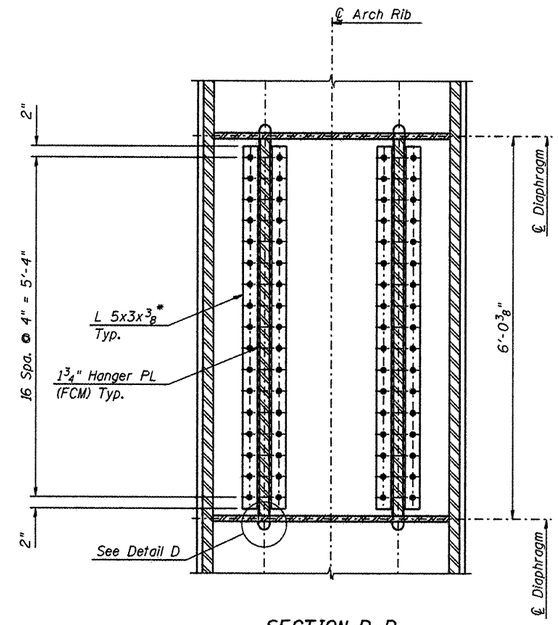

SECTION B-B

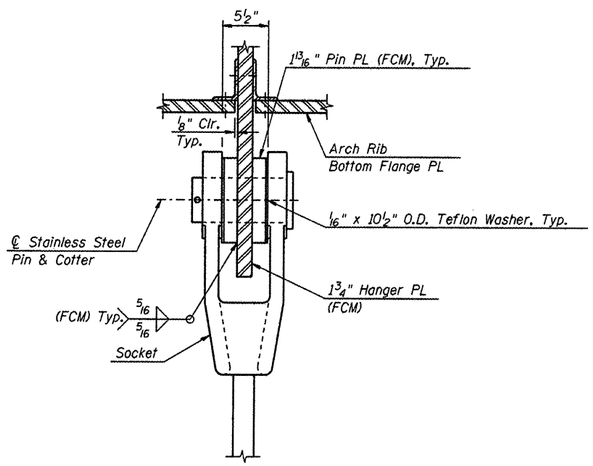

DETAIL C

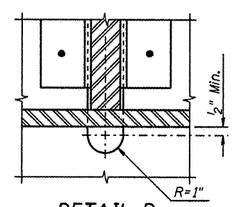

DETAIL D

Notes:

Fracture Critical Members (FCM) are delineated in the details on this sheet. Members called out as FCM shall conform to the requirements of M270 Gr. 50W F3 (FCM). These members shall be clearly labeled on shop drawings.

Magnetic particle inspection by the yoke method is required on welds to Fracture Critical Members.

Cotter and pins shall conform to the requirements of ASTM A276, A304N stainless steel with Fy = 35 ksi.

Dimensions for socket connection to hanger plate are based on the Open Strand Socket, 2400 Series as manufactured by Clodfelter Bridge and Structures International, Inc. Details from other manufacturers - Muncy Machine and Tool Company, Mucy PA or The Crosby Group LLC, Tulsa, OK may differ. Socket shop drawings and calculations, sealed by a registered structural engineer in the State of Illinois, must be sent to the Engineer for approval.

All bolts shall be 7/8" ϕ high-strength bolts.

For Arch Rib Details, see Sheets 34 thru 39 of 79.

For Hanger Details at hanger work points R1, R3 thru R16 and, R18, see Sheet 47 of 79.

L:\ROCKFORD\B258882\Dgns\CADD_Sheets\S_48_Rib Hanger Details 2.dgn

CMT ©Copyright CMT, Inc.
CRAWFORD, MURPHY & TILLY, INC.
CONSULTING ENGINEERS
License No. 184-000613

HNTB

DESIGNED	- PA, JDJ, BPD, CJW	REVISED	-
DRAWN	- GLD	REVISED	-
CHECKED	- RJK	REVISED	-
DATE	- 02/04/2011	REVISED	-

CITY OF ROCKFORD
MORGAN STREET BRIDGE

ARCH RIB HANGER DETAILS – II
STRUCTURE NO. 101-6108

SCALE: | SHEET NO. 48 OF 79 SHEETS | STA. 47+00.74 TO STA. 52+63.50

F.A.U. RTE.	SECTION	COUNTY	TOTAL SHEETS	SHEET NO.
5077	99-00493-00-BR	WINNEBAGO	253	174

CONTRACT NO. 85529

FED. ROAD DIST. NO. 2 | ILLINOIS | FED. AID PROJECT BRM-5099(165)

TABLE OF DIMENSIONS

HANGER WORK POINT AT TIE GIRDER TH(n)	A **	B	C	D	E	F	G	H	J	K
TH1 (H1)	3'-3"	4'-11 7/16"	-	10	2'-8 1/2"	10	2'-8 1/2"	3'-6"	3	9 3/4"
TH1 (H2)	2'-9"	-	4'-8 3/4"	8	2'-2"	9	2'-5 1/4"	3'-3"	2	6 1/2"
TH2 Thru TH9	3'-3"	4'-11 7/16"	4'-11 7/16"	10	2'-8 1/2"	10	2'-8 1/2"	3'-6"	3	9 3/4"
TH10 (H19)	3'-3"	4'-8 3/4"	-	8	2'-2"	9	2'-5 1/4"	3'-3"	2	6 1/2"
TH10 (H20)	2'-9"	-	4'-11 7/16"	10	2'-8 1/2"	10	2'-8 1/2"	3'-6"	3	9 3/4"

** Dimension "A" measured along ℄ Tie Girder

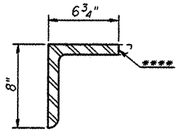

Pc. L8x8
CUTTING DIAGRAM

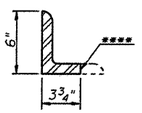

Pc. L6x6x1
CUTTING DIAGRAM

****Cut must be gas or plasma cut, no sheared edges.

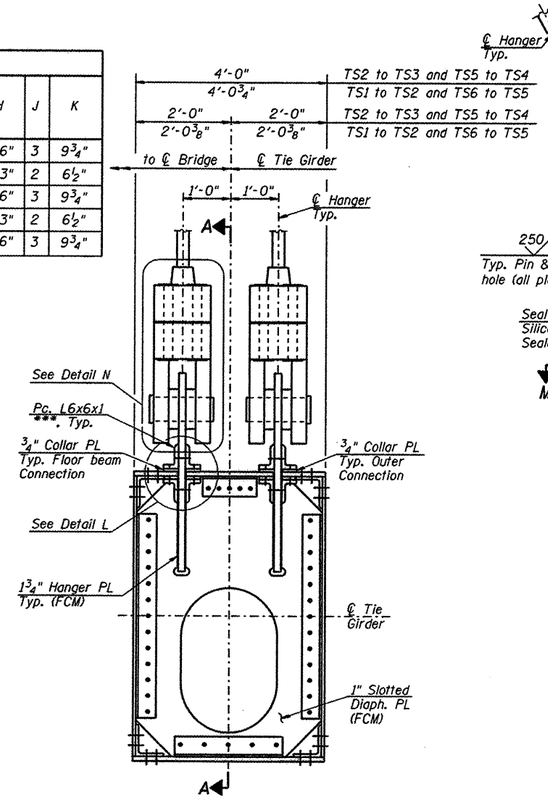

HANGER CONNECTION DETAIL

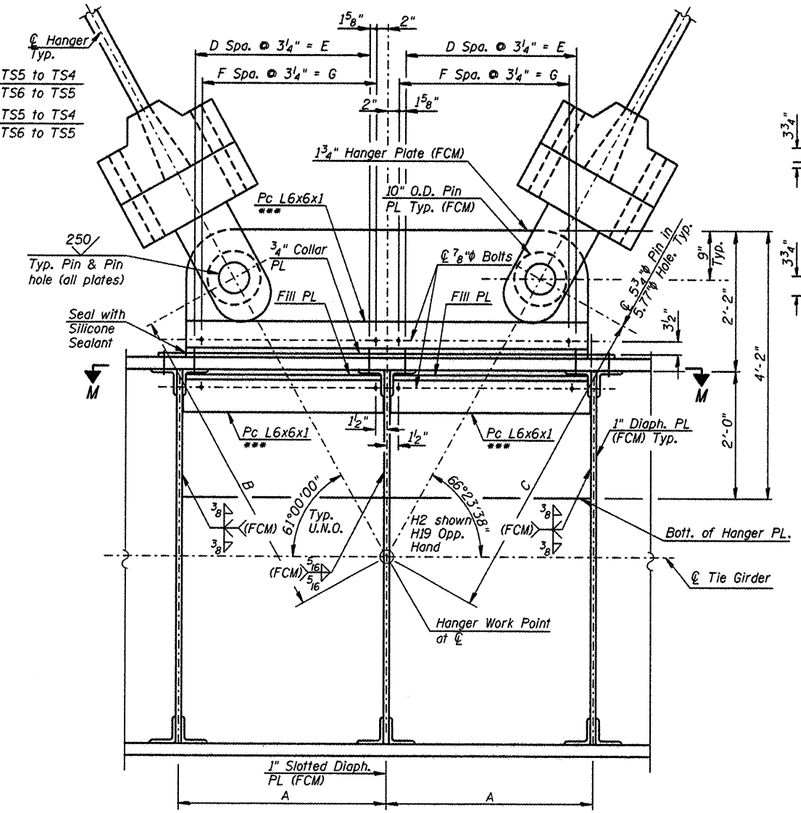

***Holes in 6" leg shall be oversized. Holes in the 3 3/4" leg shall be standard holes.

SECTION A-A
Looking North

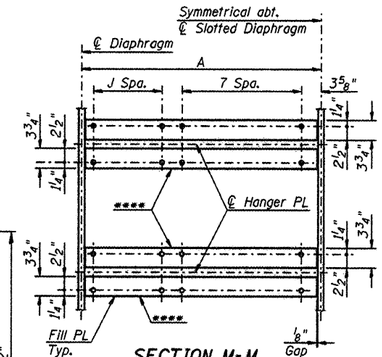

SECTION M-M
Top Flange not shown for clarity.

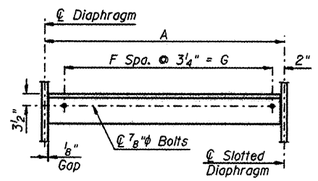

ELEVATION
BOTTOM Pc. L6x6x1

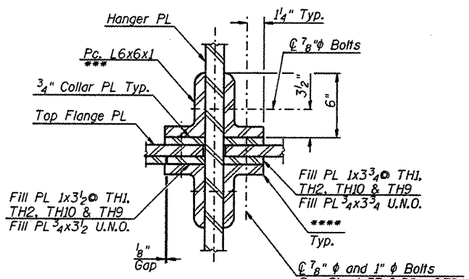

DETAIL L

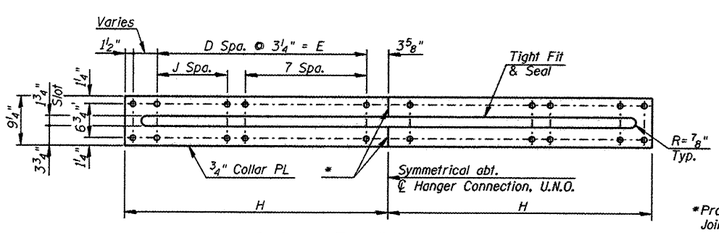

SHOWN AT OUTER CONNECTION

*Provide Silicone Joint Sealant

COLLAR PLATE DETAIL

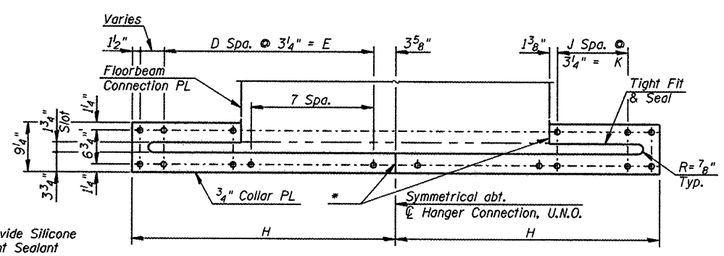

SHOWN AT FLOORBEAM CONNECTION

Notes:

- • Denotes 7/8" ϕ high-strength bolt.
- ○ Denotes 1" ϕ high-strength bolt.

Fracture Critical Members (FCM) are delineated in the details on this sheet. Members called out as FCM shall be M270 Gr. 50 F3(FCM). These members and plates shall be clearly labeled on shop drawings.

Magnetic particle inspection by the yoke method is required on welds to fracture critical members.

Hanger Plate to Tie Girder connection angles shall conform to the requirements of M270 Gr. 50W.

Cotter pins and pins shall conform to the requirements of ASTM A276 A304N stainless steel with Fy-35 ksi.

All structural steel shall conform to the requirements of M270 Gr. 50W, unless noted otherwise.

For Detail N and additional Tie Girder Hanger Details, see Sheet 50 of 79.

For additional Tie Girder Details, see Sheets 41 thru 46 of 79.

U.N.O. denotes unless noted otherwise.

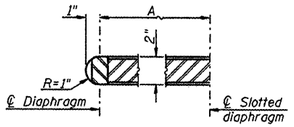

TIE GIRDER SLOT DETAIL

L:\ROCKFORD\0892882\D-ew\CADD.Sheets\S.49.Tie Girder Hanger Details.dgn

CMT
CRAWFORD, MURPHY & TILLY, INC.
CONSULTING ENGINEERS
License No. 184-000613

HNTB

DESIGNED - PA, JDJ, BPD, CJW	REVISED -		
DRAWN - GLD	REVISED -		
CHECKED - RJK	REVISED -		
DATE - 02/04/2011	REVISED -		

CITY OF ROCKFORD
MORGAN STREET BRIDGE

TIE GIRDER HANGER DETAILS - I
STRUCTURE NO. 101-6108

SCALE: | SHEET NO. 49 OF 79 SHEETS | STA. 47+00.74 TO STA. 52+63.50

F.A.U. RTE.	SECTION	COUNTY	TOTAL SHEETS	SHEET NO.
5077	99-00493-00-BR	WINNEBAGO	253	175
		CONTRACT NO. 85529		
FED. ROAD DIST. NO. 2	ILLINOIS	FED. AID PROJECT BRM-5099(65)		

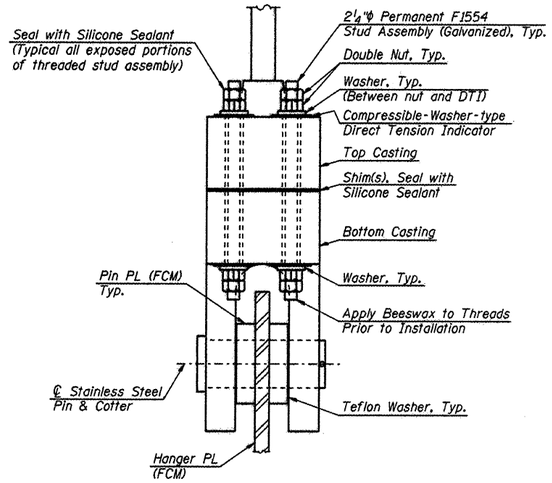

TYPICAL CASTING ASSEMBLY

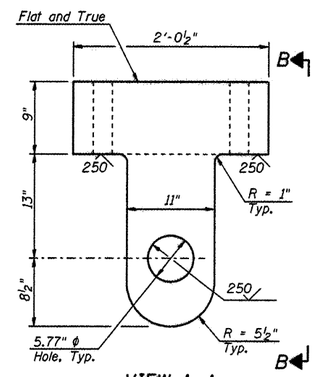

VIEW A-A

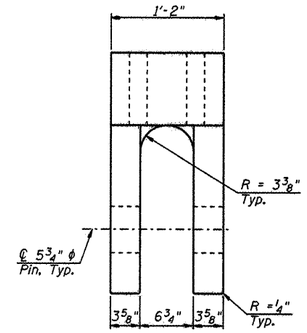

VIEW B-B

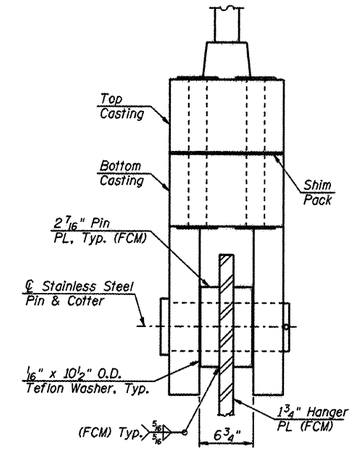

DETAIL N

NOTE:
2¼" F1554 STUDS SHALL NOT BE TORQUED MORE THAN ONCE.

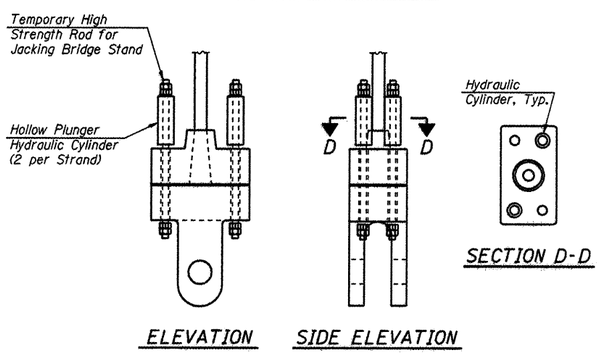

ELEVATION SIDE ELEVATION

SECTION D-D

JACKING DETAIL

Note:
After completion of jacking of both hangers per location, temporary jacking rods shall be changed out in pairs to permanent threaded studs under dead load only. Pressure in all jacks for a given pair of hangers shall be equalized.

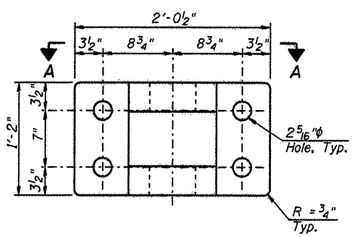

BOTTOM CASTING DETAIL
(Bottom View)

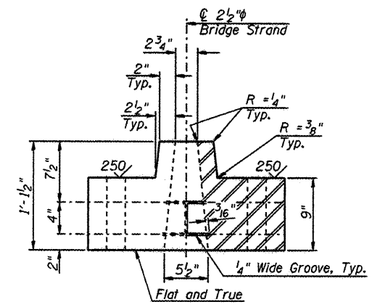

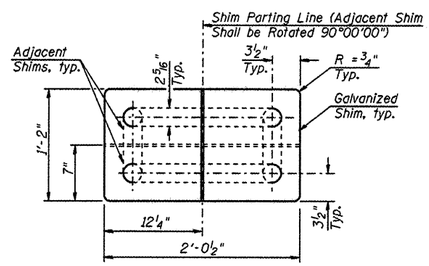

SHIM DETAIL

Note:
Seal perimeter of Shim Pack with silicone sealant. Provide shim stock galvanized and of varying thicknesses to accomodate a maximum shim pack thickness of 2½". Shim thickness shall vary from 1/32" thick to ¼" thick. Total thickness of shim pack shall not exceed 2½". Nominal thickness of shim pack is 1¼".

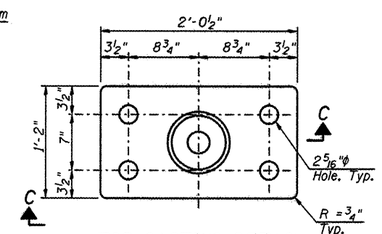

TOP CASTING DETAIL
(Top View)

NOTE:
ALL FOUR CABLES AT ONE LOCATION SHALL BE STRESSED SIMULTANEOUSLY DURING ERECTION.

Notes:

Cotter and pin shall conform to the requirements of ASTM A276, A304N stainless steel with Fy = 35 ksi.

The 2¼"ϕ Studs shall conform to the requirements of ASTM F1554 Gr. 105. The Studs shall also meet the supplementary requirements of paragraph S5 of F1554. The contractor shall install the studs to a pretension of between 100 and 110 kips. Galvanize studs in accordance to the requirements of ASTM F2329.

Compressible-Washer-Type direct tensions indicators shall be installed to prove the 2¼" Stud tension. The direct tension indicators (DTI'S) shall be supplied in accordance with ASTM F959 except for the compressive strength which is non-standard. The DTI'S shall be zinc coated. The DTI supplier shall provide inspection and acceptance criteria to install the bots to the pretension specified. At a minimum, inspection and acceptance shall be accomplished through the use of feeler gauges to measure the compression gaps in the installed DTI'S. The DTI supplier shall provide a test report for establishing the inspection and acceptance criteria. At a minimum, the DTI supplier shall test an additional 5 DTI'S under hardened flat washers, similar to those that will be used in production, at a load of 105 kip in order to determine the inspection and acceptance criteria. All DTI'S including those used for testing, shall be supplied from the same lot.

Washers shall conform to the requirements of ASTM F436. Nuts shall conform to the requirements of ASTM A563 Grade DH Heavy Hex. Galvanize in accordance to therequirements of ASTM A153.

Alloy Steel Casting shallconform to the requirements of ASTM A148, Gr. 80-50 (annealed and galvanized).

For location of Detail N and additional Tie Girder Hanger Details, see Sheet 49 of 79.

L:\ROCKFORD\0826982\Drawn\C400.Sheets\S.58.Tie Girder Hanger Details 2.dgn

CMT ©Copyright CMT, Inc.
CRAWFORD, MURPHY & TILLY, INC.
CONSULTING ENGINEERS
License No. 184-000663

HNTB

DESIGNED - PA, JDJ, BPD, CJW	REVISED -		
DRAWN - GLD	REVISED -		
CHECKED - RJK	REVISED -		
DATE - 02/04/2011	REVISED -		

CITY OF ROCKFORD
MORGAN STREET BRIDGE

TIE GIRDER HANGER DETAILS - II
STRUCTURE NO. 101-6108

SCALE: | SHEET NO. 50 OF 79 SHEETS | STA. 47+00.74 TO STA. 52+63.50

F.A.U. RTE.	SECTION	COUNTY	TOTAL SHEETS	SHEET NO.
5077	99-00493-00-BR	WINNEBAGO	253	176
		CONTRACT NO. 85529		

FED. ROAD DIST. NO. 2 | ILLINOIS | FED. AID PROJECT BRM-5099(65)

Legend

H(n) - Hanger Member

R(n) - Hanger work point along ℄ Arch Rib

TH(n) - Hanger work point along ℄ Tie Girder

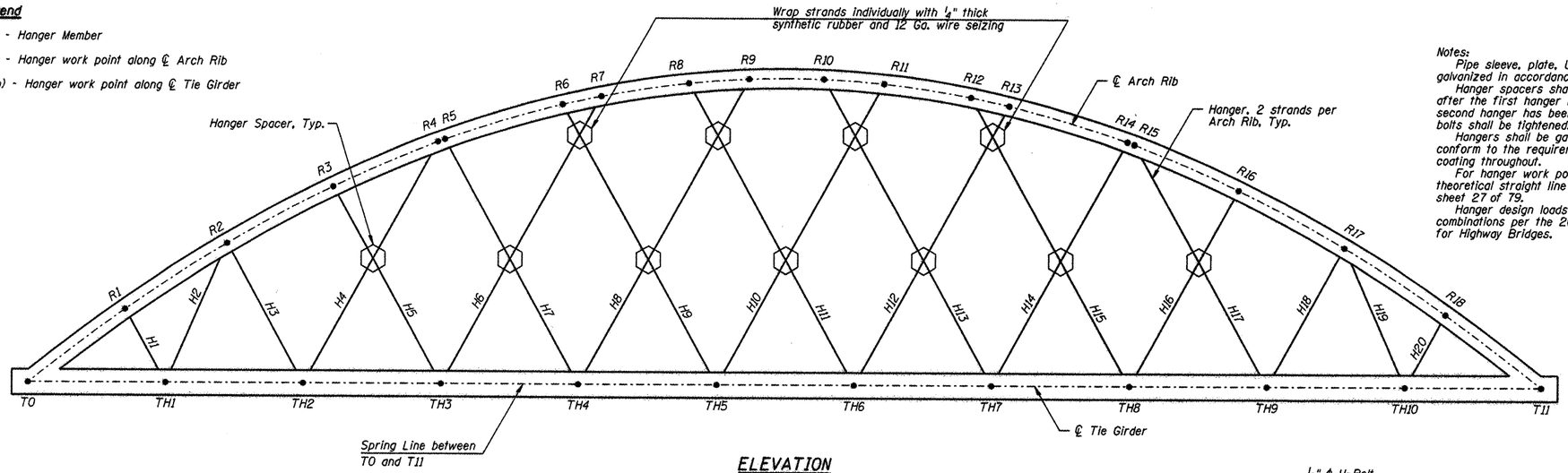

ELEVATION

Notes:

Pipe sleeve, plate, U-bolts, nuts and washers shall be galvanized in accordance with ASTM A153.

Hanger spacers shall be installed, but not tightened, after the first hanger has been fully tensioned. After the second hanger has been fully tightened, the hanger spacer bolts shall be tightened.

Hangers shall be galvanized structural strand and shall conform to the requirements of ASTM A586 with Class C coating throughout.

For hanger work points and hanger length based on the theoretical straight line dimensions from ℄ pin to ℄ pin, see sheet 27 of 79.

Hanger design loads are based on the Service Load combinations per the 2002 AASHTO Standard Specifications for Highway Bridges.

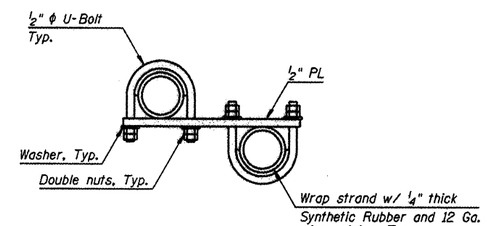

SECTION A-A

One plate shown for clarity

Hanger H(n)	Struct. Strand Dia. (In)	No. Strands Required Per Rib	Gross Metallic Area (Sq. In.)	Loads (Kips)						
				Service					Factored	
				DL-A	DL-B	FWS	Max.	Min.	Max.	Min.
H1	2.5	2	3.75	79	8	23	144	104	214	136
H2	2.5	2	3.75	21	2	8	70	16	116	14
H3	2.5	2	3.75	117	12	35	220	158	330	206
H4	2.5	2	3.75	80	7	23	185	82	297	89
H5	2.5	2	3.75	124	13	39	242	168	368	217
H6	2.5	2	3.75	110	11	33	246	123	393	138
H7	2.5	2	3.75	121	12	38	244	155	375	193
H8	2.5	2	3.75	114	12	36	252	132	402	150
H9	2.5	2	3.75	108	12	36	235	134	367	160
H10	2.5	2	3.75	106	12	36	238	126	377	146
H11	2.5	2	3.75	111	12	36	244	131	385	153
H12	2.5	2	3.75	109	12	36	234	134	367	160
H13	2.5	2	3.75	115	12	36	255	132	403	152
H14	2.5	2	3.75	115	12	38	239	149	367	185
H15	2.5	2	3.75	117	11	34	254	129	402	148
H16	2.5	2	3.75	124	13	39	243	167	368	216
H17	2.5	2	3.75	86	7	24	193	88	307	100
H18	2.5	2	3.75	112	12	35	216	149	323	194
H19	2.5	2	3.75	31	3	9	81	28	130	31
H20	2.5	2	3.75	83	8	22	149	107	219	139

Notes:

Loads shown in table are per hanger (2 strands per hanger).

DL-A is the cable force due to steel and wet concrete.

DL-B is the cable force due to superimposed Dead loads (Barriers).

FWS is the cable force due to Future Wearing Surface.

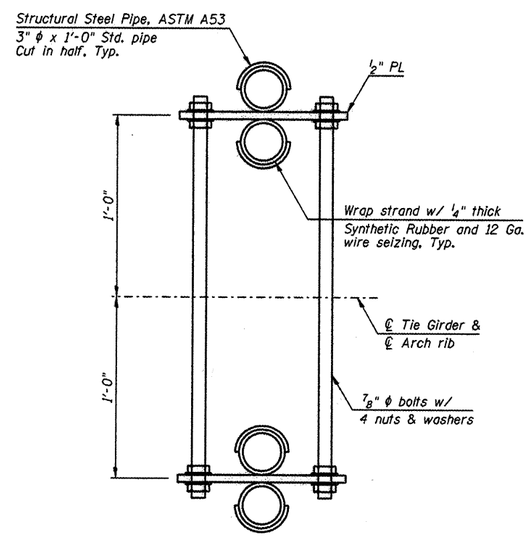

SECTION B-B

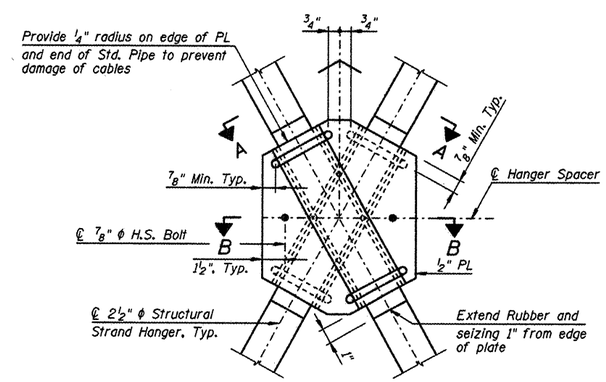

HANGER SPACER DETAIL

L:\ROCKFORD\8826882\Drawn\CADD_Sheets\S.51_Hanger Schedule.dgn

CMT ©Copyright CMT, Inc. CRAWFORD, MURPHY & TILLY, INC. CONSULTING ENGINEERS License No. 184-000613

HNTB

DESIGNED - PA, JDJ, BPD, CJW	REVISED -	CITY OF ROCKFORD MORGAN STREET BRIDGE	HANGER SCHEDULE STRUCTURE NO. 101-6108
DRAWN - GLD	REVISED -		
CHECKED - RJK	REVISED -		
DATE - 02/04/2011	REVISED -		SCALE: SHEET NO. 51 OF 79 SHEETS STA. 47+00.74 TO STA. 52+63.50

F.A.U. RTE.	SECTION	COUNTY	TOTAL SHEETS	SHEET NO.
5077	99-00493-00-BR	WINNEBAGO	253	177
		CONTRACT NO. 85529		
FED. ROAD DIST. NO. 2	ILLINOIS	FED. AID PROJECT BRM-5099(65)		

Hanger Replacement Sequence:

1. New hangers and materials shall conform to the details shown in plans.
2. Restrict all traffic to the curb lane on opposite side of hanger being replaced. Traffic control will be required.
3. Only one single hanger can be replaced at a time. At the Tie Girder Hanger Connection, remove bolts B as shown in the Jacking Diagram. install temporary high strength rods and jacks, 2 required per hanger.
4. Increase tension in jack to transfer the load to the jacks. Remove the remaining bolts A as shown in the Jacking Diagram.
5. Slowly decrease the tension in the jacks until the hanger is slack and can be removed from the temporary high strength rods and the Tie Girder Hanger Connection.
6. Remove stainless steel pin at Arch Rib Hanger Connection. Remove cable.
7. Inspect stainless steel pins and hanger plates.
8. Place new cable at the Arch Rib Hanger Connection and install stainless steel pin.
9. Tension and install anchor bolts in the Tie Girder Hanger Connection as designated on Sheet 50 of 79.
10. Seal new shim pack with silicone sealant.

FOR INFORMATION ONLY:
Details shown on this sheet are to facilitate future maintenance actions.

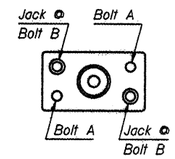

PLAN

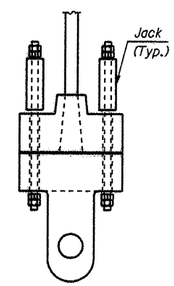

ELEVATION

JACKING DIAGRAM

L:\ROCKFORD\B526982\Dgn\C000_Sheets\S_52_Hanger Replacement Details.dgn

CMT
CRAWFORD, MURPHY & TILLY, INC.
CONSULTING ENGINEERS
License No. 184-000613

HNTB

DESIGNED	- PA, JDJ, BPD, CJW	REVISED	-
DRAWN	- GLD	REVISED	-
CHECKED	- RJK	REVISED	-
DATE	- 02/04/2011	REVISED	-

CITY OF ROCKFORD
MORGAN STREET BRIDGE

HANGER REPLACEMENT SEQUENCE AND DETAILS
STRUCTURE NO. 101-6108

SCALE: | SHEET NO. 52 OF 79 SHEETS | STA. 47+00.74 TO STA. 52+63.50

F.A.U. RTE.	SECTION	COUNTY	TOTAL SHEETS	SHEET NO.
5077	99-00493-00-BR	WINNEBAGO	253	178

CONTRACT NO. 85529

FED. ROAD DIST. NO. 2 | ILLINOIS | FED. AID PROJECT BRM-5099(65)

Legend

(Si) Denotes stringer "i"

□ Denotes fixed stringer connection

○ Denotes slotted stringer connection

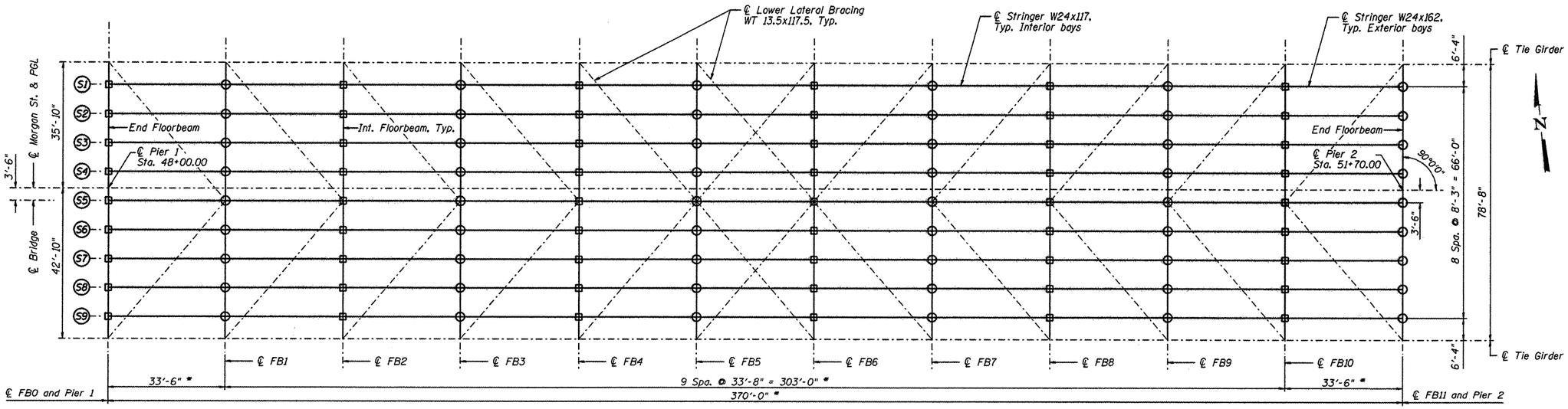

FRAMING PLAN - SPAN 2

* Dimensions are measured along Spring Line.

Notes:

See sheet 11 of 79 for typical cross section.
See sheets 60 and 61 of 79 for Stringer details.
See sheets 54 and 55 of 79 for End Floorbeam details.
See sheets 56 thru 58 of 79 for Intermediate Floorbeam details
See sheet 62 of 79 for Lower Lateral Bracing details.
Stringer webs shall be placed vertical.

L:\ROCKFORD\08256882\Dgn\CADD\Sheets\5.53.Arch Framing Plan.dgn

CMT ©Copyright CMT, Inc. CRAWFORD, MURPHY & TILLY, INC. CONSULTING ENGINEERS License No. 184-000613	HNTB	DESIGNED - PA, JDJ, BPD, CJW	REVISED -	CITY OF ROCKFORD MORGAN STREET BRIDGE	FRAMING PLAN – ARCH SPAN STRUCTURE NO. 101-6108	F.A.U. RTE.	SECTION	COUNTY	TOTAL SHEETS	SHEET NO.
		DRAWN - GLD	REVISED -			5077	99-00493-00-BR	WINNEBAGO	253	179
		CHECKED - RJK	REVISED -			CONTRACT NO. 85529				
		DATE - 02/04/2011	REVISED -		SCALE: SHEET NO. 53 OF 79 SHEETS STA. 47+00.74 TO STA. 52+63.50	FED. ROAD DIST. NO. 2	ILLINOIS	FED. AID PROJECT BRM-5099(65)		

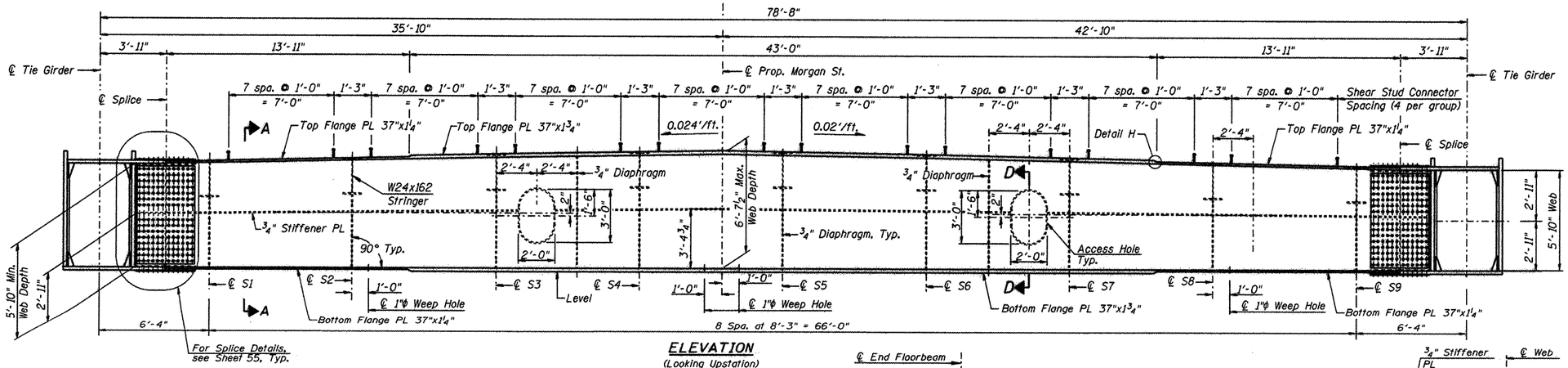

ELEVATION
(Looking Upstation)

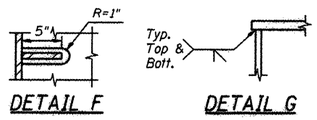

DETAIL F

DETAIL G

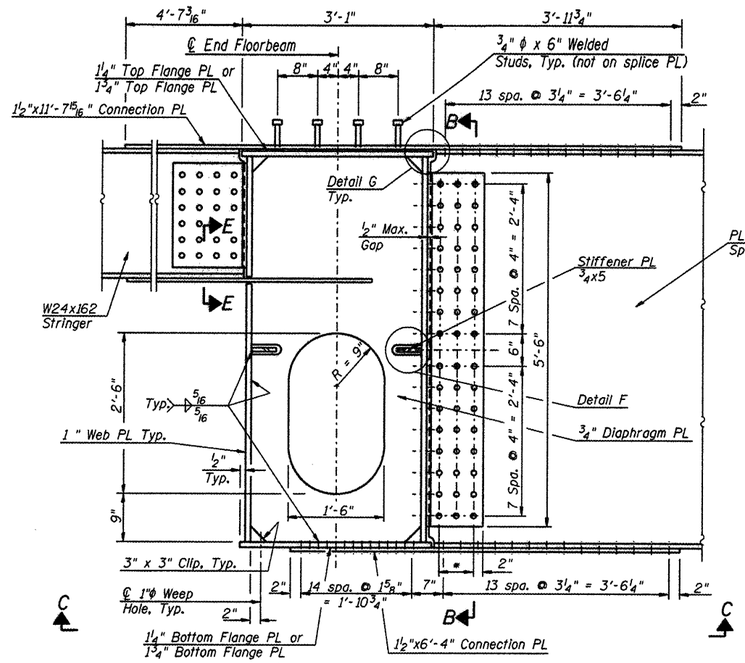

SECTION A-A

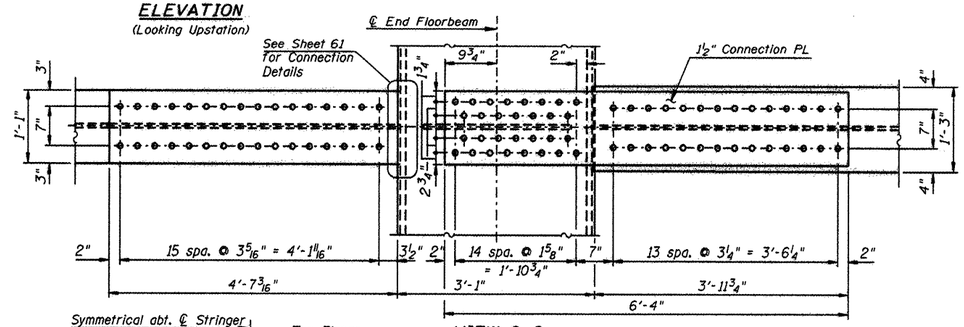

VIEW C-C

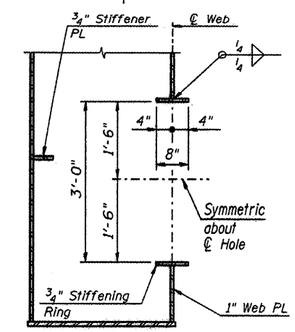

SECTION D-D

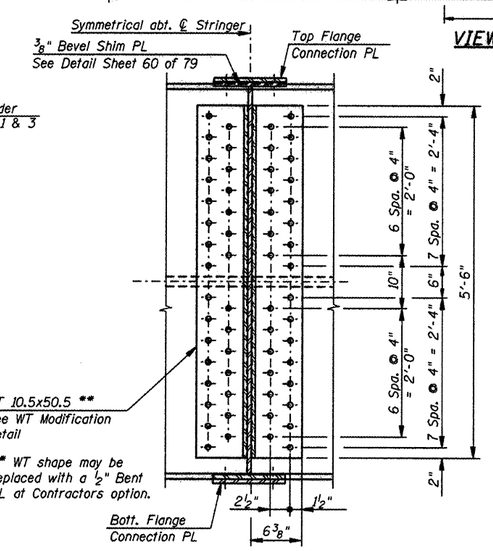

SECTION B-B

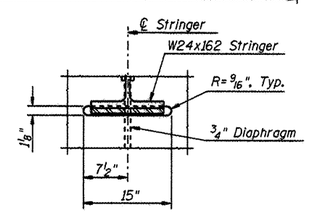

SECTION E-E

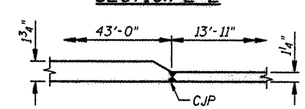

DETAIL H

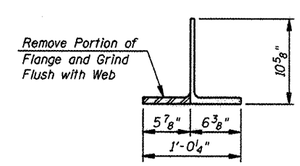

WT MODIFICATION DETAIL

Notes:

For Framing Plan, see Sheet 53 of 79.

For Stringer Details, see Sheets 60 and 61 of 79.

For Floorbeam Camber and Deflections, see Sheet 59 of 79.

For Lower Lateral Bracing Details, see Sheet 62 of 79.

For Access Door Details, see Sheet 55 of 79.

ϕ Denotes 1" ϕ high strength bolt

Web penetrations @ the Stringers shall be sealed with silicone upon the installation of the Stringer bottom flange connection plate.

End Floorbeam flange and web plates, filler plates, stiffener plates, bent plates, and splice plates shall conform to the requirements of M270 Grade 50W T3.

End Floorbeam diaphragm plates shall conform to the requirements of M270 Grade 50W T3.

For Approach Girder Details, see Sheet 24 and 25 of 79.

For Splice Details, see Sheet 55.

Cost of End Floorbeam Access Hardware including Fiberglass door shall be included in "Furnishing and Erecting Structural Steel".

BILL OF MATERIAL

Item	Unit	Total
Stud Shear Connectors	Each	512

CMT ©Copyright CMT, Inc. CRAWFORD, MURPHY & TILLY, INC. CONSULTING ENGINEERS License No. 184-000063

HNTB

DESIGNED	PA, JDJ, BPD, CJW	REVISED	-
DRAWN	GLD	REVISED	-
CHECKED	RJK	REVISED	-
DATE	02/04/2011	REVISED	-

CITY OF ROCKFORD
MORGAN STREET BRIDGE

END FLOORBEAM ELEVATION AND SECTION
STRUCTURE NO. 101-6108

SCALE: | SHEET NO. 54 OF 79 SHEETS | STA. 47+00.74 TO STA. 52+63.50

F.A.U. RTE.	SECTION	COUNTY	TOTAL SHEETS	SHEET NO.
5077	99-00493-00-BR	WINNEBAGO	253	180

CONTRACT NO. 85529

FED. ROAD DIST. NO. 2 | ILLINOIS | FED. AID PROJECT BRM-5099(65)

L:\ROCKFORD\V8268682\Drawings\CADD_Sheets\S_54_End Floorbeam.dgn

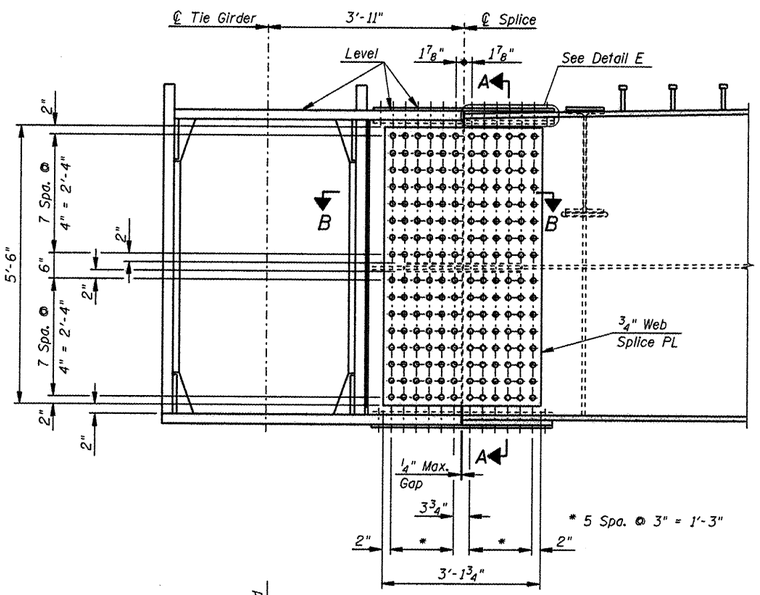

END FLOORBEAM - WEB SPLICE

FB0 Shown, FB11 similar

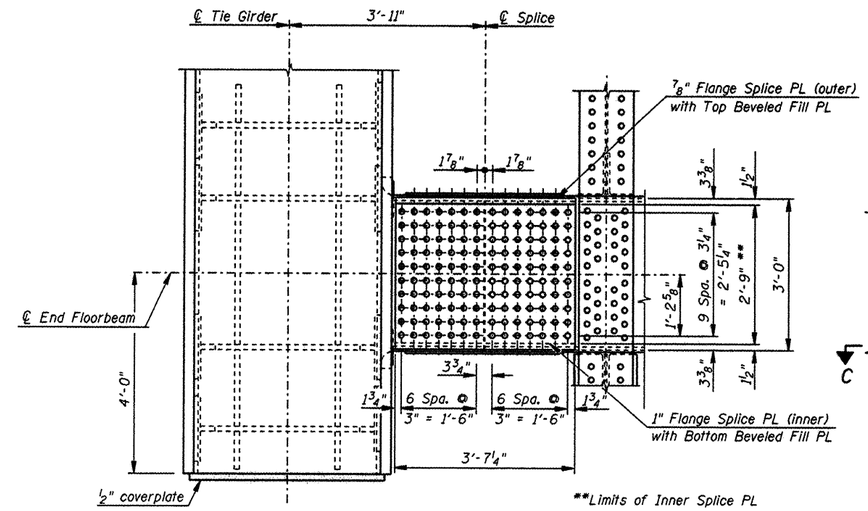

END FLOORBEAM TOP AND BOTTOM FLANGE SPLICE

Top Flange Splice Shown, Bottom Flange Splice Similar.
(Stiffener Plates not shown for clarity.)

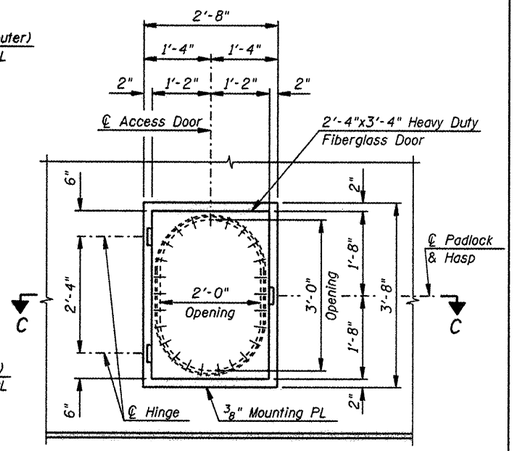

ACCESS DOOR DETAIL

Notes:
Install Fiberglass door per manufacturer's recommendations. Door shall be heavy duty and water tight. Fiberglass door shall be approved by the engineer.

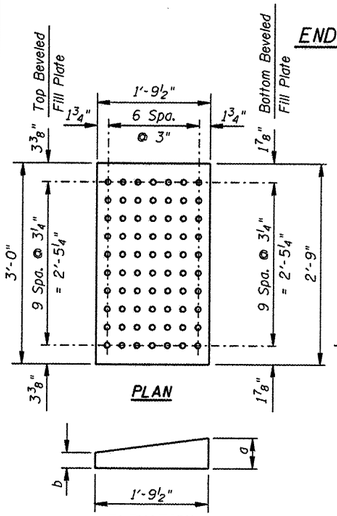

PLAN

ELEVATION

Bottom Beveled Fill Plate shown,
Top Beveled Fill Plate similar

Top & Bottom Beveled Fill Plate	a	b
South	9/16"	3/16"
North	5/8"	1/8"

END FLOORBEAM TOP FLANGE SPLICE BEVELED FILL PLATES

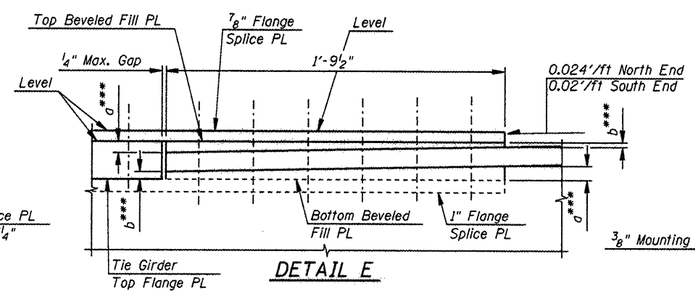

DETAIL E

*** For a and b dimensions, see Beveled Fill Plate details.

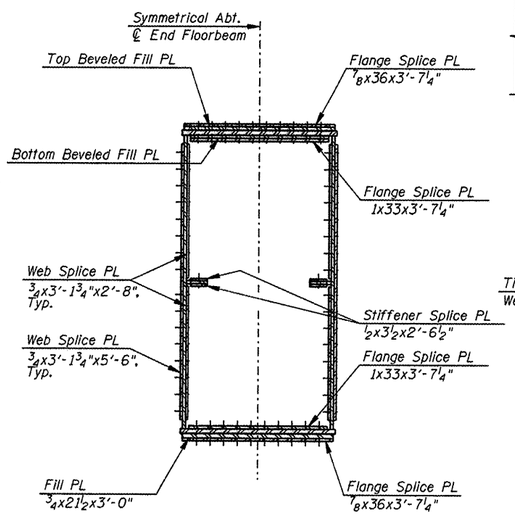

SECTION A-A

Tie Girder not shown for clarity.

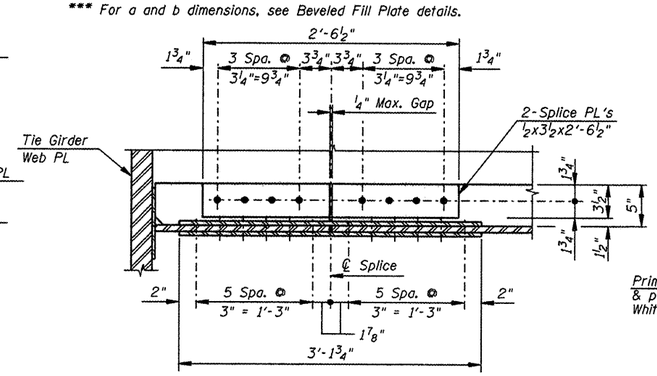

SECTION B-B

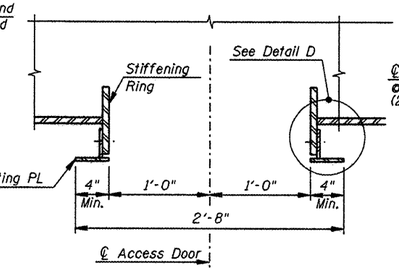

SECTION C-C

Fiberglass Door not shown for clarity

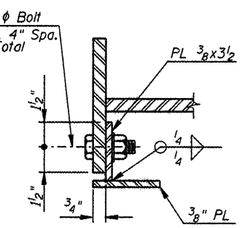

DETAIL D

Notes:
- Denotes 7/8" ϕ high-strength bolt.
- Denotes 1" ϕ high-strength bolt.

For Stringer Details, see Sheets 60 and 61 of 79.
End Floorbeam flange and web plates, filler plates, stiffener plates, bent plates and splice plates shall conform to the requirements of M270 Grade 50W T3.
For End Floorbeam Elevation and Section Details, see Sheets 54 and 55 of 79.
For Tied Arch End Details, see Sheets 31 thru 33 of 79.

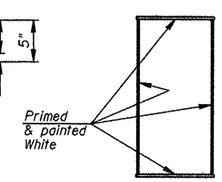

END FLOORBEAM INTERIOR PAINT DETAIL

L:\ROCKFORD\B2626B2\Drawings\CADD.Sheets\S.55.End Floorbeam Details.dgn

CMT ©Copyright CMT, Inc.
CRAWFORD, MURPHY & TILLY, INC.
CONSULTING ENGINEERS
License No. 184-000613

HNTB

DESIGNED - PA, JDJ, BPD, CJW	REVISED -		
DRAWN - GLD	REVISED -		
CHECKED - RJK	REVISED -		
DATE - 02/04/2011	REVISED -		

CITY OF ROCKFORD
MORGAN STREET BRIDGE

END FLOORBEAM DETAILS
STRUCTURE NO. 101-6108

SCALE: | SHEET NO. 55 OF 79 SHEETS | STA. 47+00.74 TO STA. 52+63.50

F.A.U. RTE.	SECTION	COUNTY	TOTAL SHEETS	SHEET NO.
5077	99-00493-00-BR	WINNEBAGO	253	181

CONTRACT NO. 85529

FED. ROAD DIST. NO. 2 | ILLINOIS | FED. AID PROJECT BRM-5059(65)

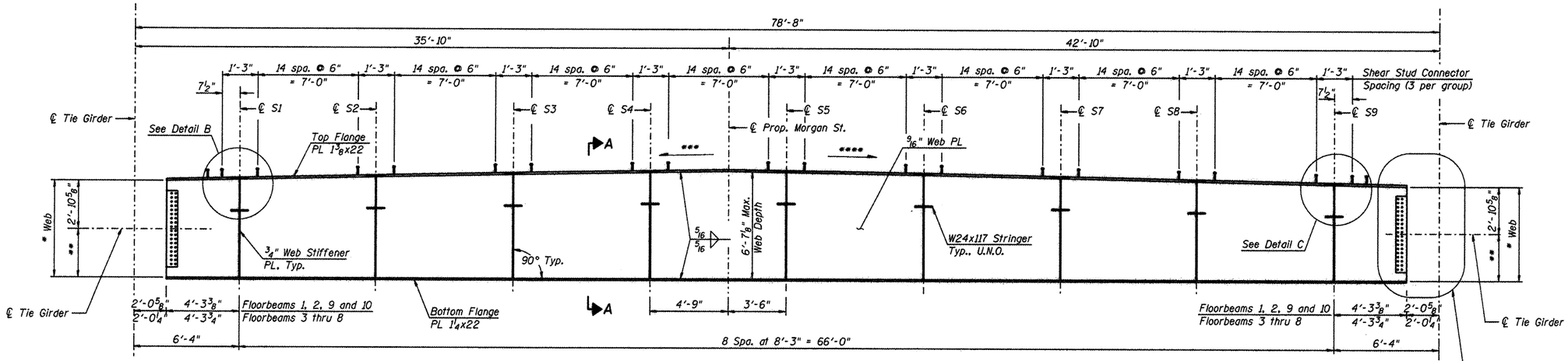

ELEVATION

* 5'-9⅜" at FB3 thru FB8
5'-10⅜" at FB1, FB2, FB9 and FB10

** 2'-10¾" at FB3 thru FB8
2'-11¾" at FB1, FB2, FB9 and FB10

*** 0.024'/ft at FB3 thru FB8
0.022'/ft at FB1, FB2, FB9 and FB10

**** 0.020'/ft at FB3 thru FB8
0.018'/ft at FB1, FB2, FB9 and FB10

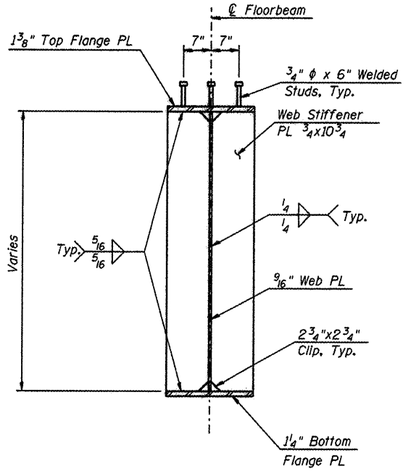

SECTION A-A

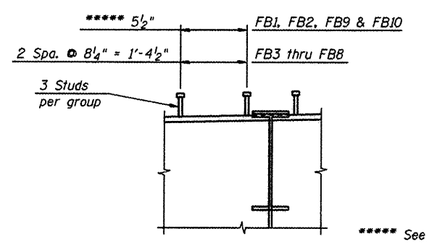

DETAIL B

***** See Sheet 58 for additional studs on fill plate.

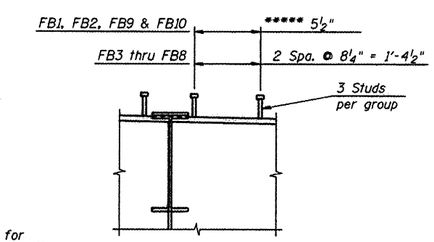

DETAIL C

Notes:
For Framing Plan, see Sheet 53 of 79.
For Stringer Details, see Sheets 60 and 61 of 79.
For Floorbeam Camber and Deflections, see Sheet 59 of 79.
Floorbeam flange and web plates, splice plates and connection angles shall conform to the requirements of M270 Grade 50W T3.
For Lower Lateral Bracing Details, see Sheet 62 of 79.

BILL OF MATERIAL

Item	Unit	Total
Stud Shear Connectors	Each	3,772

L:\ROCKFORD\08258082\D-mc\CADD_Sheets\S_56_Int Floorbeam.dgn

CMT ©Copyright CMT, Inc. CRAWFORD, MURPHY & TILLY, INC. CONSULTING ENGINEERS License No. 184-000613

HNTB

DESIGNED	PA, JDJ, BPD, CJW	REVISED	-
DRAWN	GLD	REVISED	-
CHECKED	RJK	REVISED	-
DATE	02/04/2011	REVISED	-

CITY OF ROCKFORD
MORGAN STREET BRIDGE

INTERMEDIATE FLOORBEAM ELEVATION AND SECTION
STRUCTURE NO. 101-6108

SCALE: | SHEET NO. 56 OF 79 SHEETS | STA. 47+00.74 TO STA. 52+63.50

F.A.U. RTE.	SECTION	COUNTY	TOTAL SHEETS	SHEET NO.
5077	99-00493-00-BR	WINNEBAGO	253	182

CONTRACT NO. 85529

FED. ROAD DIST. NO. 2 | ILLINOIS | FED. AID PROJECT BRM-5099(65)

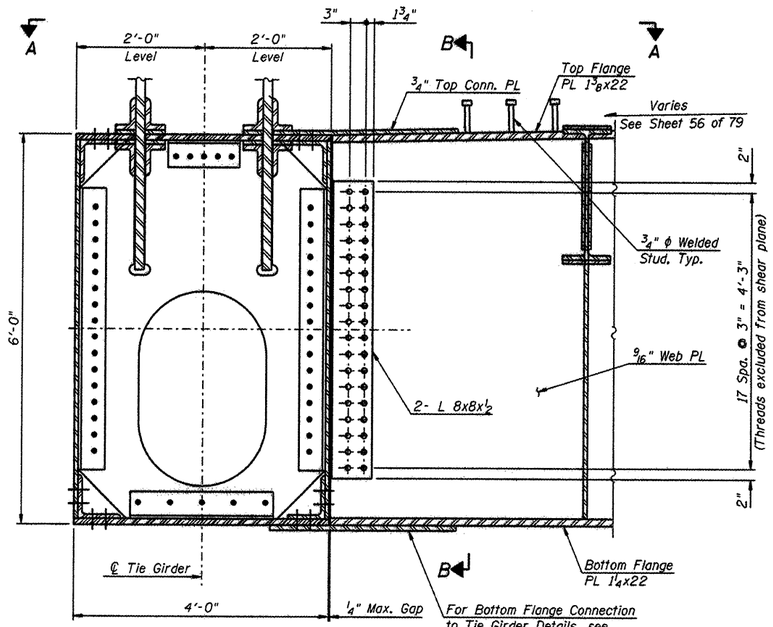

SECTION THRU SPLICE
(Floorbeams 3 thru 8)

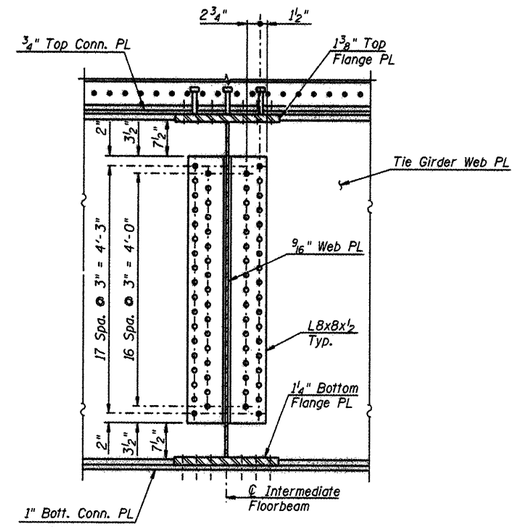

SECTION B-B
(Bolts in Tie Girder
not shown for clarity)

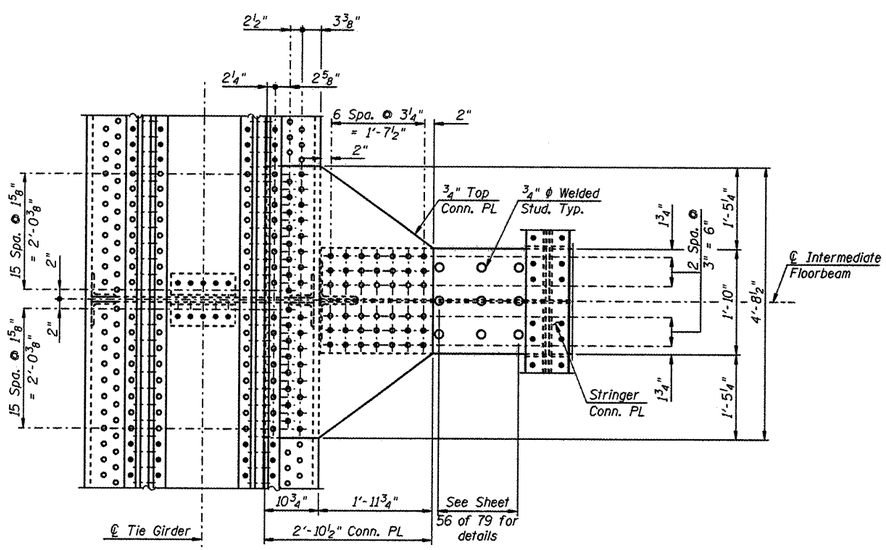

VIEW A-A

Notes:

• Denotes 7/8" ϕ high-strength bolt.
∘ Denotes 1" ϕ high-strength bolt.

For Intermediate Floorbeam Elevation and additional notes, see Sheet 56 of 79.

For Tie Girder Details, see Sheets 41 thru 43 and 46 of 79.

For Tie Girder Hanger Details, see Sheets 49 and 50 of 79.

L:\ROCKFORD\0620880\Dgns\CHRD_Sheets\5.57_Int Floorbeam Details 1.dgn

CMT CRAWFORD, MURPHY & TILLY, INC. CONSULTING ENGINEERS License No. 184-000613 ©Copyright CMT, Inc.	HNTB	DESIGNED - PA, JDJ, BPD, CJW	REVISED -	CITY OF ROCKFORD MORGAN STREET BRIDGE	INTERMEDIATE FLOORBEAM DETAILS STRUCTURE NO. 101-6108	F.A.U. RTE.	SECTION	COUNTY	TOTAL SHEETS / SHEET NO.
		DRAWN - GLD	REVISED -			5077	99-00493-00-BR	WINNEBAGO	253 / 183
		CHECKED - RJK	REVISED -					CONTRACT NO. 85529	
		DATE - 02/04/2011	REVISED -		SCALE: / SHEET NO. 57 OF 79 SHEETS / STA. 47+00.74 TO STA. 52+63.50	FED. ROAD DIST. NO. 2	ILLINOIS	FED. AID PROJECT BRM-5099(65)	

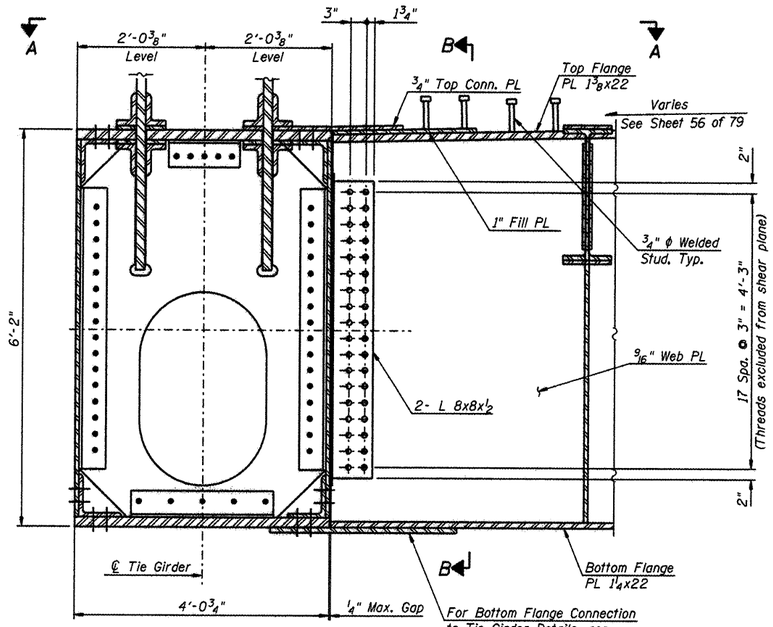

SECTION THRU SPLICE
(Floorbeams 1, 2, 9 and 10)

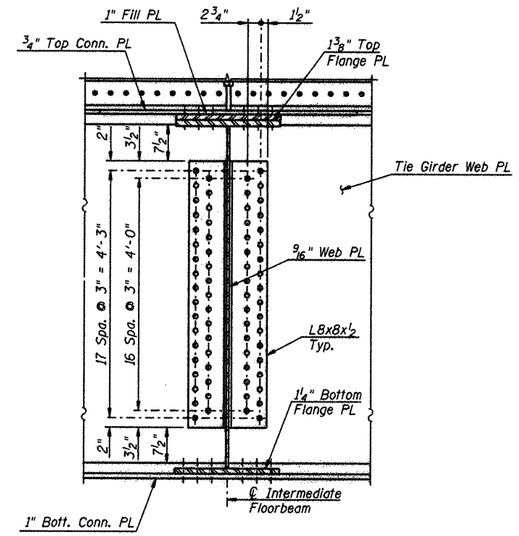

SECTION B-B
(Bolts in Tie Girder not shown for clarity)

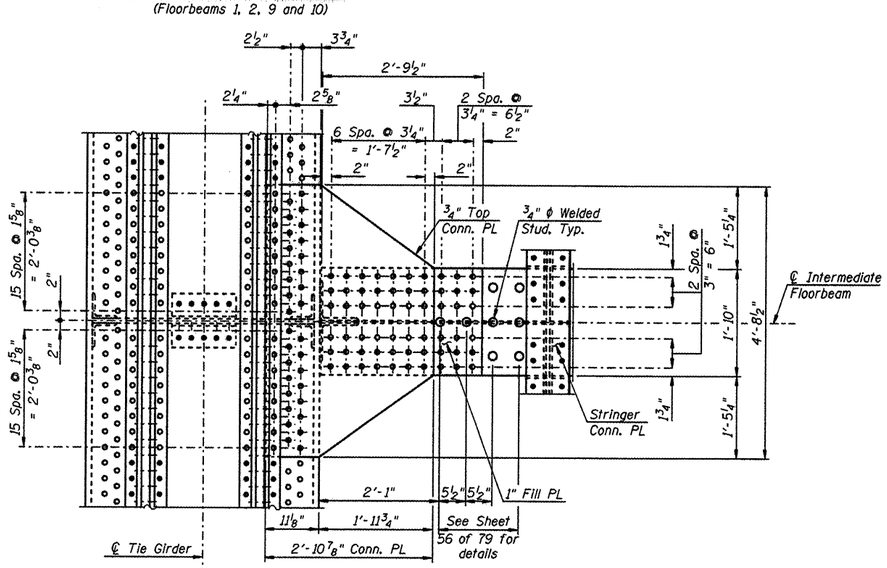

VIEW A-A

Notes:

- • Denotes 7/8" ϕ high-strength bolt.
- ∘ Denotes 1" ϕ high-strength bolt.

For Intermediate Floorbeam Elevation and additional notes, see Sheet 56 of 79.

For Tie Girder Details, see Sheets 41 thru 43 and 46 of 79.

For Tie Girder Hanger Details, see Sheets 49 and 50 of 79.

L:\ROCKFORD\08260802\Draw\CADD_Sheets\S_58_Int Floorbeam Details 2.dgn

CMT CRAWFORD, MURPHY & TILLY, INC. CONSULTING ENGINEERS License No. 184-000613 ©Copyright CMT, Inc.	HNTB	DESIGNED - PA, JDJ, BPD, CJW	REVISED -	CITY OF ROCKFORD MORGAN STREET BRIDGE	MISCELLANEOUS FLOORBEAM DETAILS STRUCTURE NO. 101-6108
		DRAWN - GLD	REVISED -		
		CHECKED - RJK	REVISED -		
		DATE - 02/04/2011	REVISED -		SCALE: SHEET NO. 58 OF 79 SHEETS STA. 47+00.74 TO STA. 52+63.50

F.A.U. RTE.	SECTION	COUNTY	TOTAL SHEETS	SHEET NO.
5077	99-00493-00-BR	WINNEBAGO	253	184
		CONTRACT NO. 85529		
FED. ROAD DIST. NO. 2	ILLINOIS	FED. AID PROJECT BRM-5099(65)		

	Floorbeam	DEAD LOAD DEFLECTIONS										
Dead Load Steel	End FB (FB0, FB11)	0.000	-0.007	-0.016	-0.023	-0.028	-0.030	-0.028	-0.023	-0.016	-0.007	0.000
	Int. FB (FB1 to FB10)	0.000	-0.006	-0.014	-0.021	-0.025	-0.027	-0.025	-0.021	-0.014	-0.006	0.000
Dead Load Slab	End FB (FB0, FB11)	0.000	-0.018	-0.041	-0.060	-0.072	-0.076	-0.072	-0.060	-0.041	-0.018	0.000
	Int. FB (FB1 to FB10)	0.000	-0.023	-0.052	-0.075	-0.090	-0.095	-0.090	-0.075	-0.052	-0.023	0.000
Dead Load Barrier	End FB (FB0, FB11)	0.000	-0.001	-0.001	-0.001	-0.002	-0.002	-0.002	-0.001	-0.001	-0.001	0.000
	Int. FB (FB1 to FB10)	0.000	0.000	-0.001	-0.001	-0.001	-0.001	-0.001	-0.001	-0.001	0.000	0.000
Total Dead Load	End FB (FB0, FB11)	0.000	-0.026	-0.058	-0.084	-0.101	-0.107	-0.101	-0.084	-0.058	-0.026	0.000
	Int. FB (FB1 to FB10)	0.000	-0.030	-0.067	-0.097	-0.116	-0.123	-0.116	-0.097	-0.067	-0.030	0.000

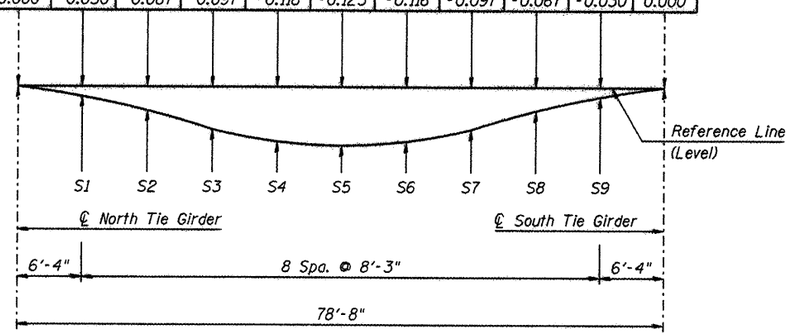

FLOORBEAMS - DEAD LOAD DEFLECTIONS

Units are feet, and are at ℄ of Stringers and ends of Floorbeam.
- indicates downward deflection

	Floorbeam	CAMBER										
Dead Load Steel	End FB (FB0, FB11)	0.000	0.007	0.016	0.023	0.028	0.030	0.028	0.023	0.016	0.007	0.000
	Int. FB (FB1 to FB10)	0.000	0.006	0.014	0.021	0.025	0.027	0.025	0.021	0.014	0.006	0.000
Dead Load Slab	End FB (FB0, FB11)	0.000	0.018	0.041	0.060	0.072	0.076	0.072	0.060	0.041	0.018	0.000
	Int. FB (FB1 to FB10)	0.000	0.023	0.052	0.075	0.090	0.095	0.090	0.075	0.052	0.023	0.000
Dead Load Barrier	End FB (FB0, FB11)	0.000	0.001	0.001	0.001	0.002	0.002	0.002	0.001	0.001	0.001	0.000
	Int. FB (FB1 to FB10)	0.000	0.000	0.001	0.001	0.001	0.001	0.001	0.001	0.001	0.000	0.000
Total Dead Load	End FB (FB0, FB11)	0.000	0.026	0.058	0.084	0.101	0.107	0.101	0.084	0.058	0.026	0.000
	Int. FB (FB1 to FB10)	0.000	0.030	0.067	0.097	0.116	0.123	0.116	0.097	0.067	0.030	0.000

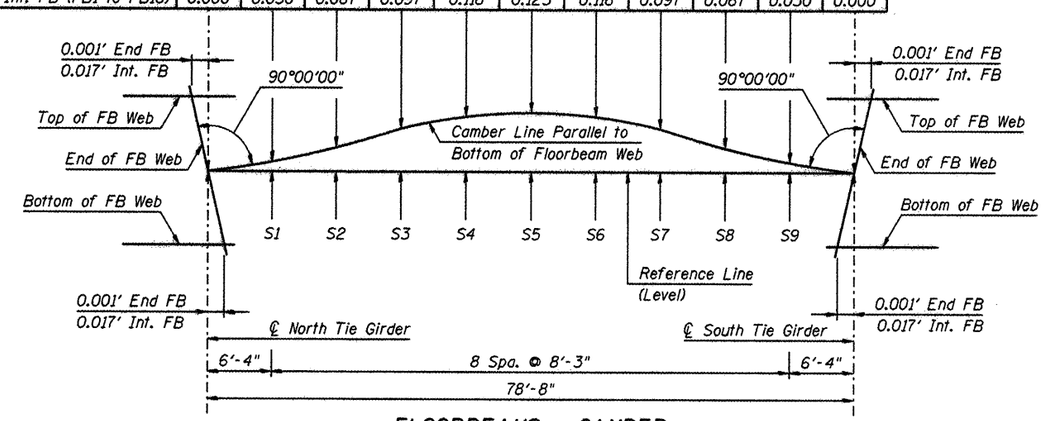

FLOORBEAMS - CAMBER

Units are feet, and are at ℄ of Stringers and ends of Floorbeam.
+ indicates downward deflection

	Stringers	DEAD LOAD DEFLECTIONS				
Dead Load Steel	End Str. (S1, S9)	0.000	0.001	0.001	0.000	0.000
	Int. Str. (S2 to S8)	0.000	0.003	0.003	0.002	0.000
Dead Load Slab	End Str. (S1, S9)	0.000	0.002	0.000	-0.001	0.000
	Int. Str. (S2 to S8)	0.000	0.004	0.002	0.000	0.000
Dead Load Barrier	End Str. (S1, S9)	0.000	0.000	-0.001	0.000	0.000
	Int. Str. (S2 to S8)	0.000	0.000	0.001	0.000	0.000
Total Dead Load	End Str. (S1, S9)	0.000	0.003	0.000	-0.001	0.000
	Int. Str. (S2 to S8)	0.000	0.008	0.006	0.003	0.000

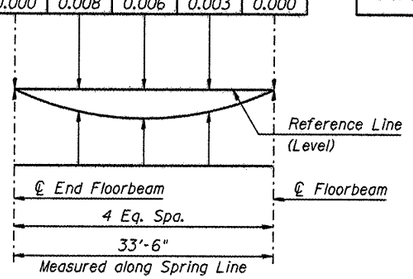

STRINGERS - DEAD LOAD DEFLECTIONS (EXTERIOR BAY - WEST)

Units are feet and are at quarter points of spans.
+ indicates downward deflection

	Stringers	DEAD LOAD DEFLECTIONS				
Dead Load Steel	End Str. (S1, S9)	0.000	-0.001	-0.001	-0.001	0.000
	Int. Str. (S2 to S8)	0.000	0.000	-0.002	-0.002	0.000
Dead Load Slab	End Str. (S1, S9)	0.000	-0.003	-0.004	-0.002	0.000
	Int. Str. (S2 to S8)	0.000	-0.002	-0.004	-0.003	0.000
Dead Load Barrier	End Str. (S1, S9)	0.000	0.000	-0.001	0.000	0.000
	Int. Str. (S2 to S8)	0.000	0.000	0.001	0.000	0.000
Total Dead Load	End Str. (S1, S9)	0.000	-0.003	-0.007	-0.004	0.000
	Int. Str. (S2 to S8)	0.000	-0.002	-0.005	-0.004	0.000

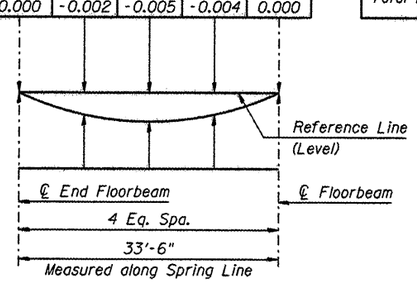

STRINGERS - DEAD LOAD DEFLECTIONS (EXTERIOR BAY - EAST)

Units are feet and are at quarter points of spans.
+ indicates downward deflection

	Stringers	DEAD LOAD DEFLECTIONS				
Dead Load Steel	End Str. (S1, S9)	0.000	-0.001	-0.001	-0.001	0.000
	Int. Str. (S2 to S8)	0.000	-0.001	-0.002	-0.001	0.000
Dead Load Slab	End Str. (S1, S9)	0.000	-0.007	-0.008	-0.004	0.000
	Int. Str. (S2 to S8)	0.000	-0.009	-0.011	-0.006	0.000
Dead Load Barrier	End Str. (S1, S9)	0.000	-0.001	-0.002	-0.001	0.000
	Int. Str. (S2 to S8)	0.000	0.000	0.000	0.000	0.000
Total Dead Load	End Str. (S1, S9)	0.000	-0.009	-0.012	-0.007	0.000
	Int. Str. (S2 to S8)	0.000	-0.010	-0.013	-0.008	0.000

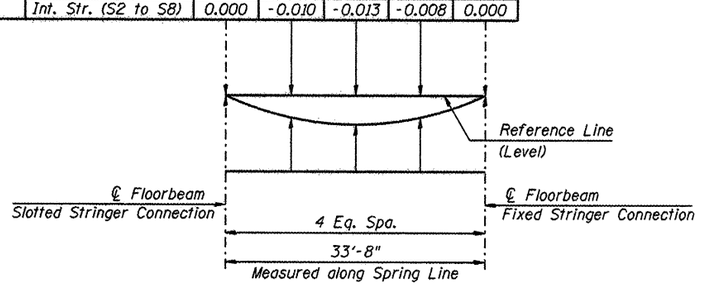

STRINGERS - DEAD LOAD DEFLECTIONS (INTERIOR BAYS)

Units are feet and are at quarter points of spans.
+ indicates downward deflection

Notes:

Ends of floorbeams shall be plumb under total dead load.

The floorbeams shall be fabricated such that under total dead load the top of the floorbeam web will be parallel to the finished slab cross slope defined by the Roadway Surface Elevations on Sheets 7 and 8.

"Dead Load Steel" ordinates represent the amount of deflection due to all structural steel. Deflections due to erection stresses are not included.

"Dead Load Slab" ordinates represent the amount of deflection due to the slab (8").

"Dead Load Barrier" ordinates represent the amount of deflection due to the barriers.

Stringers are not cambered and shall be fabricated with natural camber concaved down.

S(n) denotes stringer number.

CMT ©Copyright CMT, Inc.
CRAWFORD, MURPHY & TILLY, INC.
CONSULTING ENGINEERS
License No. 184-000613

HNTB

DESIGNED	- PA, JDJ, BPD, CJW	REVISED	-
DRAWN	- GLD	REVISED	-
CHECKED	- RJK	REVISED	-
DATE	- 02/04/2011	REVISED	-

CITY OF ROCKFORD
MORGAN STREET BRIDGE

FLOORBEAM CAMBER
STRUCTURE NO. 101-6108

SCALE: | SHEET NO. 59 OF 79 SHEETS | STA. 47+00.74 TO STA. 52+63.50

F.A.U. RTE.	SECTION	COUNTY	TOTAL SHEETS	SHEET NO.
5077	99-00493-00-BR	WINNEBAGO	253	185

CONTRACT NO. 85529

FED. ROAD DIST. NO. 2 | ILLINOIS | FED. AID PROJECT BRM-5099(65)

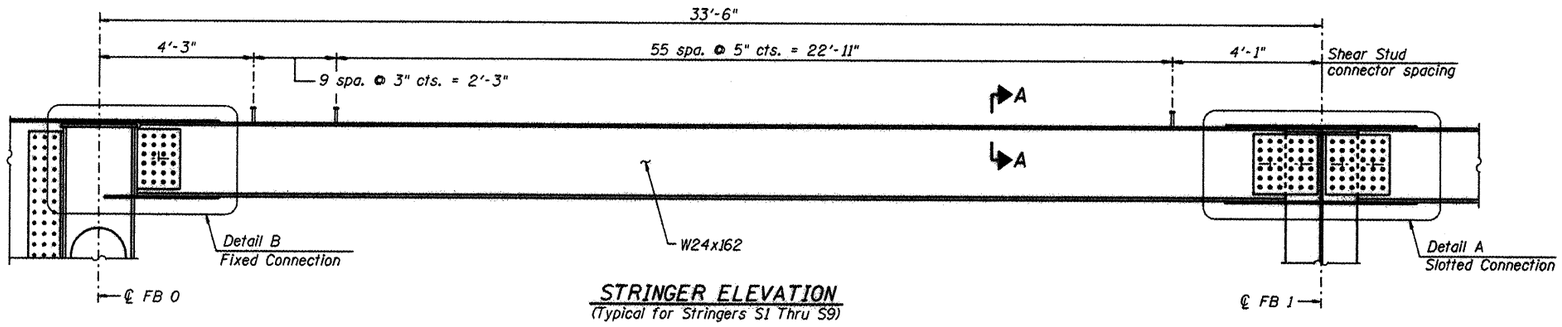

STRINGER ELEVATION
(Typical for Stringers S1 Thru S9)

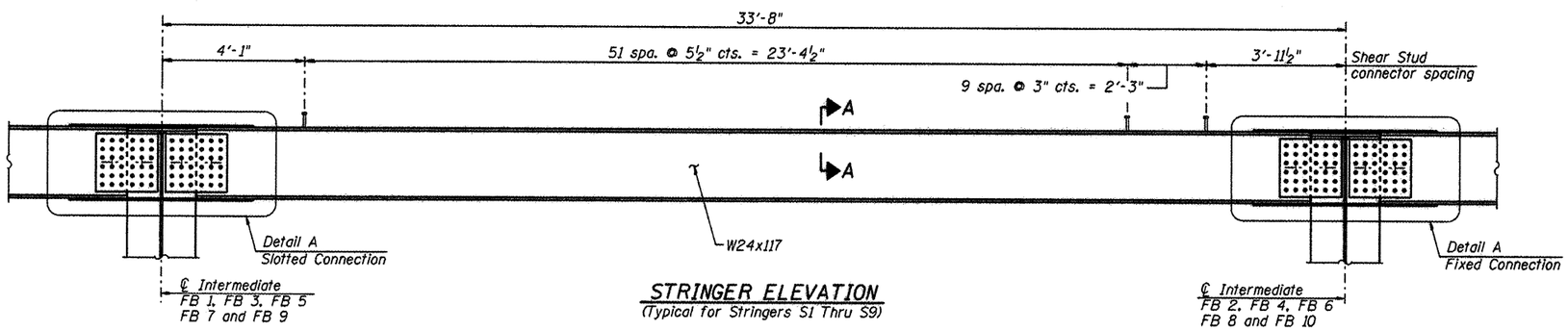

STRINGER ELEVATION
(Typical for Stringers S1 Thru S9)

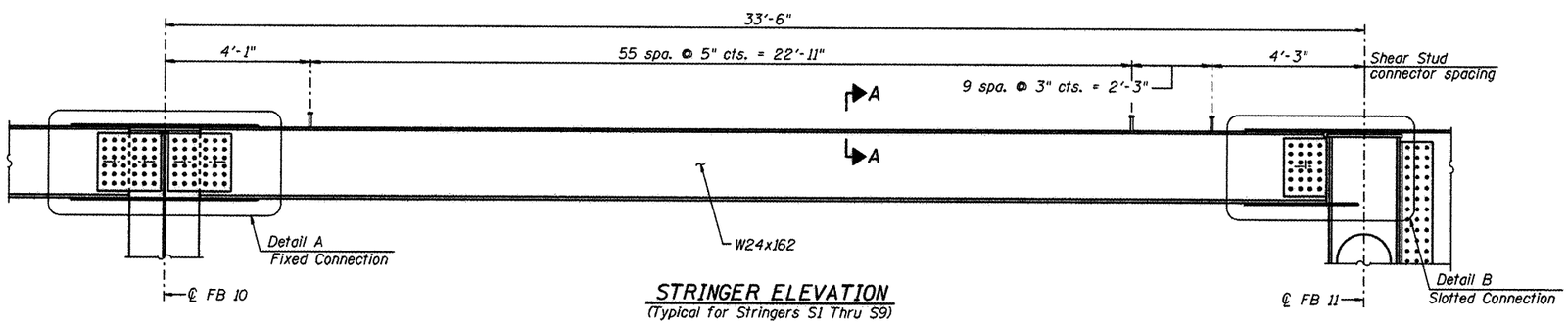

STRINGER ELEVATION
(Typical for Stringers S1 Thru S9)

Notes:
For Details A and B, see Sheet 61 of 79 .
For location of Bevel Shim ℄, see Sheet 61 of 79.

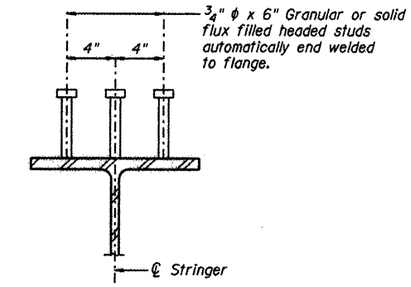

SECTION A-A

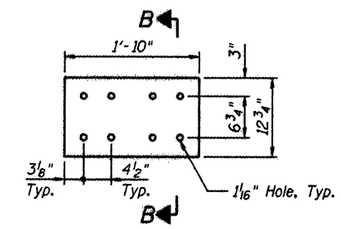

INTERMEDIATE FLOORBEAM

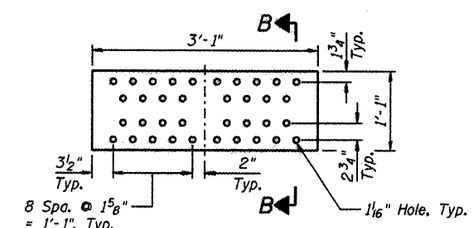

END FLOORBEAM

BEVEL SHIM PLATE DETAIL

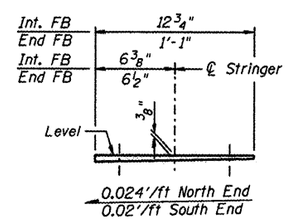

SECTION B-B

BILL OF MATERIAL

Item	Unit	Total
Stud Shear Connectors	Each	18,333

CMT ©Copyright CMT, Inc.
CRAWFORD, MURPHY & TILLY, INC.
CONSULTING ENGINEERS
License No. 184-000613

HNTB

DESIGNED	- PA, JDJ, BPD, CJW	REVISED	-
DRAWN	- GLD	REVISED	-
CHECKED	- RJK	REVISED	-
DATE	- 02/04/2011	REVISED	-

CITY OF ROCKFORD
MORGAN STREET BRIDGE

STRINGER ELEVATIONS AND DETAILS
STRUCTURE NO. 101-6108

SCALE: | SHEET NO. 60 OF 79 SHEETS | STA. 47+00.74 TO STA. 52+63.50

F.A.U. RTE.	SECTION	COUNTY	TOTAL SHEETS	SHEET NO.
5077	99-00493-00-BR	WINNEBAGO	253	186
		CONTRACT NO. 85529		
FED. ROAD DIST. NO. 2	ILLINOIS	FED. AID PROJECT BRM-5099(65)		

L:\ROCKFORD\9826892\Dgn\CADD_Sheets\S_68_Stringer Elevation.dgn

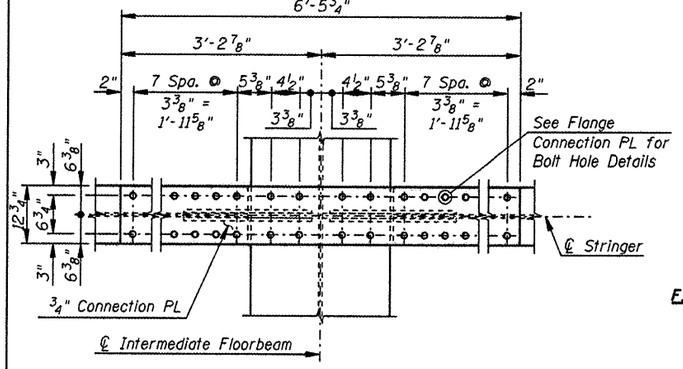

VIEW A-A

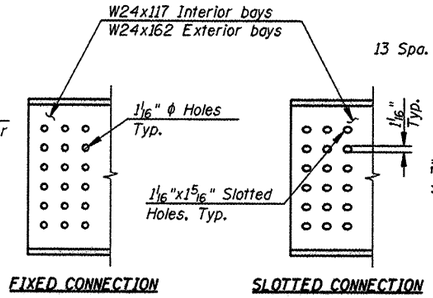

STRINGER END ELEVATION AT WEB PLATE CONNECTION

Notes:
Use standard 1 1/16" ϕ holes for 1" ϕ bolts on stringer webs at connections denoted as "Fixed".
Use 1 1/16"x1 5/16" slotted holes for 1" ϕ bolts on stringer webs at connections denoted as "Slotted".
Bolt holes in web connection plates and FB stiffener PL shall be 1 1/16" ϕ holes for 1" ϕ bolts.

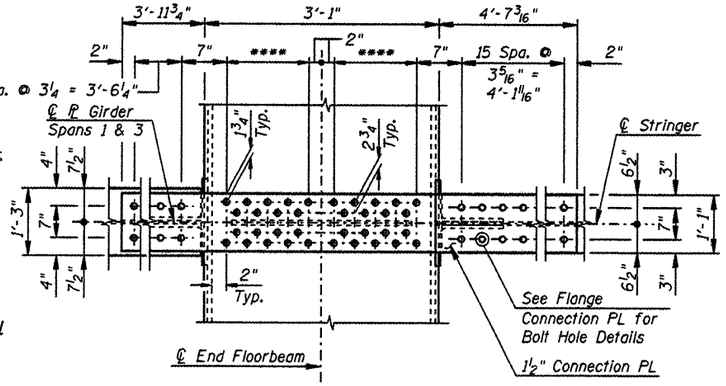

VIEW E-E

**** 8 Spa. @ 1 5/8" = 1'-1"

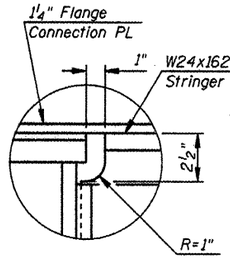

DETAIL H

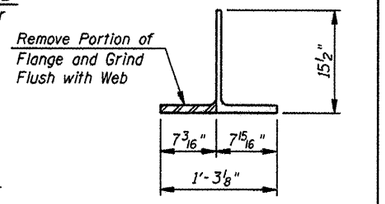

WT MODIFICATION DETAIL

*2 Spa. @ 3 1/4" = 6 1/2"
** 2 Spa. @ 3 3/8" = 6 3/4"

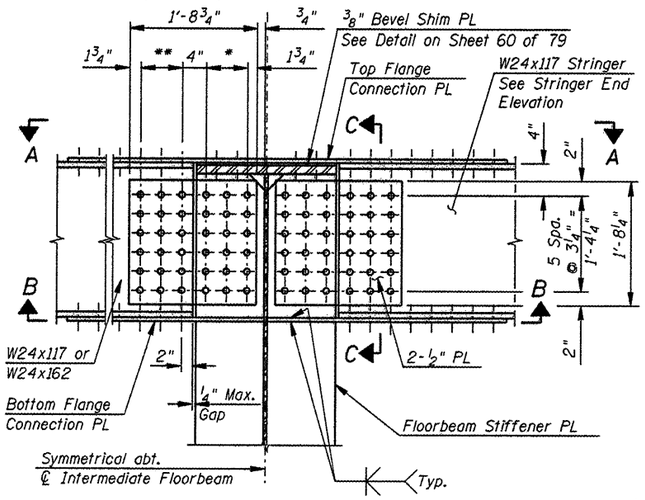

DETAIL A

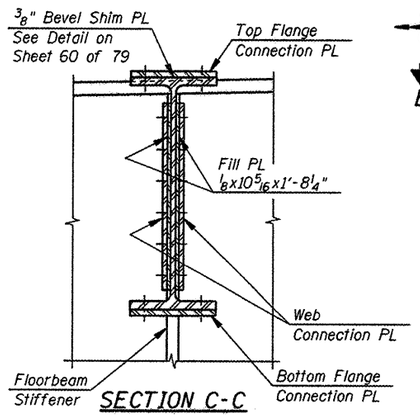

SECTION C-C

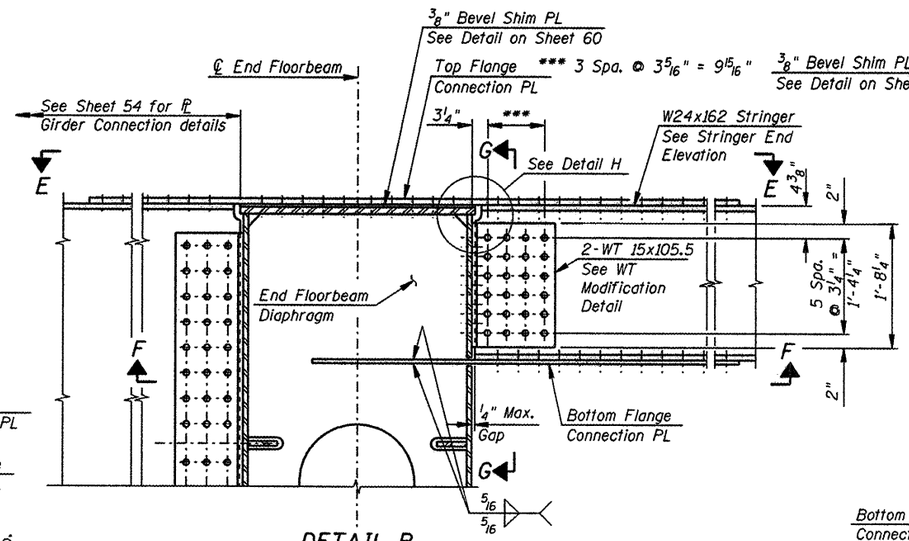

DETAIL B

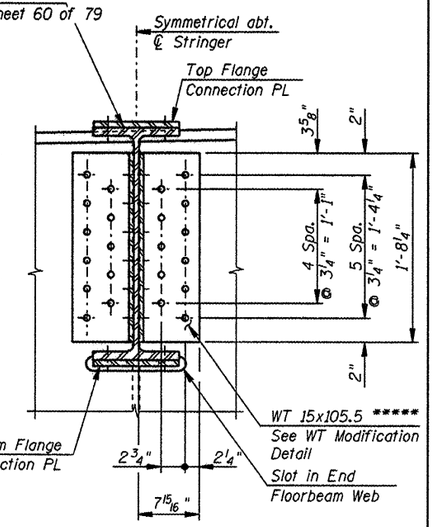

SECTION G-G

***** WT shape may be replaced with a 3/4" Bent PL at Contractors option.

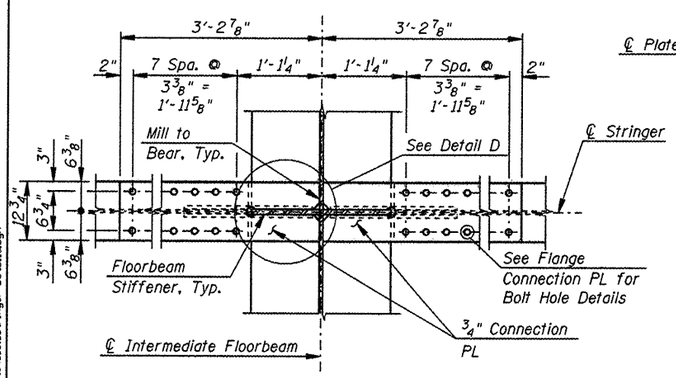

VIEW B-B

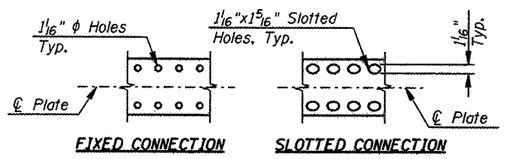

PART PLAN FLANGE CONNECTION PL

Notes:
Use standard 1 1/16" ϕ holes for 1" ϕ bolts on all flange connection plates at connections denoted as "Fixed".
Use 1 1/16"x1 5/16" slotted holes for 1" ϕ bolts on all flange connection plates at connections denoted as "Slotted".
Bolt holes in stringer flanges and floorbeam flanges shall be 1 1/16" ϕ holes for 1" ϕ bolts.

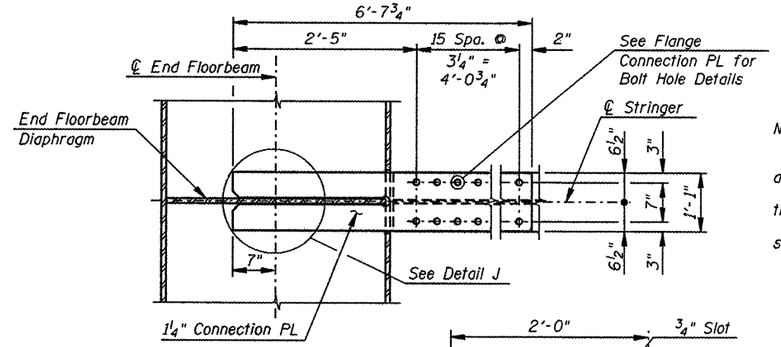

VIEW F-F

Notes:
o Denotes 1" ϕ high-strength bolt.
For End Floorbeam details, see sheets 54 and 55 of 79.
For Intermediate Floorbeam details, see sheets 56 thru 57 of 79.
For additional notes and locations of Details A and B, see sheet 60 of 79.

NOTE:
BOLTS IN SLOTTED CONNECTION SHALL BE FINGER TIGHT UNTIL SLAB IS POURED. BOLTS SHALL BE FULLY TIGHTENED AFTER SLAB HAS BEEN POURED. SEE SHEET 4 OF 79.

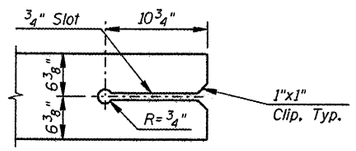

DETAIL D

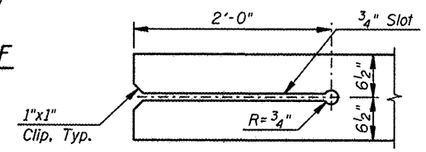

DETAIL J

CMT CRAWFORD, MURPHY & TILLY, INC. CONSULTING ENGINEERS License No. 184-000613 ©Copyright CMT, Inc.	HNTB	DESIGNED - PA, JDJ, BPD, CJW	REVISED -
		DRAWN - GLD	REVISED -
		CHECKED - RJK	REVISED -
		DATE - 02/04/2011	REVISED -

CITY OF ROCKFORD
MORGAN STREET BRIDGE

STRINGER CONNECTION DETAILS
STRUCTURE NO. 101-6108

SCALE: | SHEET NO. 61 OF 79 SHEETS | STA. 47+00.74 TO STA. 52+63.50

F.A.U. RTE.	SECTION	COUNTY	TOTAL SHEETS	SHEET NO.
5077	99-00493-00-BR	WINNEBAGO	253	187
		CONTRACT NO. 85529		
FED. ROAD DIST. NO. 2	ILLINOIS	FED. AID PROJECT BRM-5099(65)		

L:\ROCKFORD\68268862\Dgn\C400_Sheets\S.61_Stringer Details.dgn

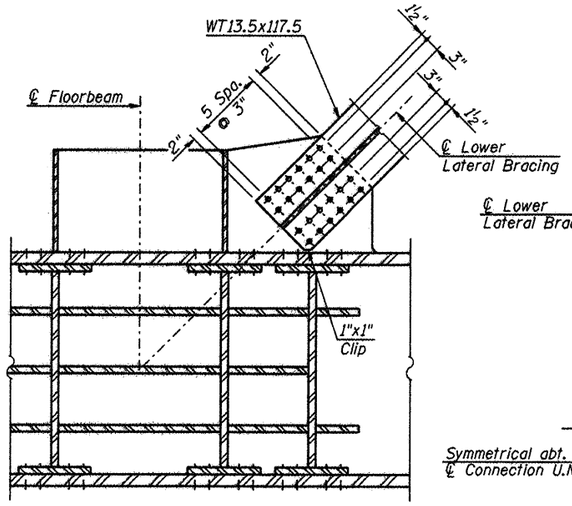

DETAIL B

Shown at Tie Girder Panel Point T0
Tie Girder Panel Point T11 Opposite Hand
Typical @ 4 Locations

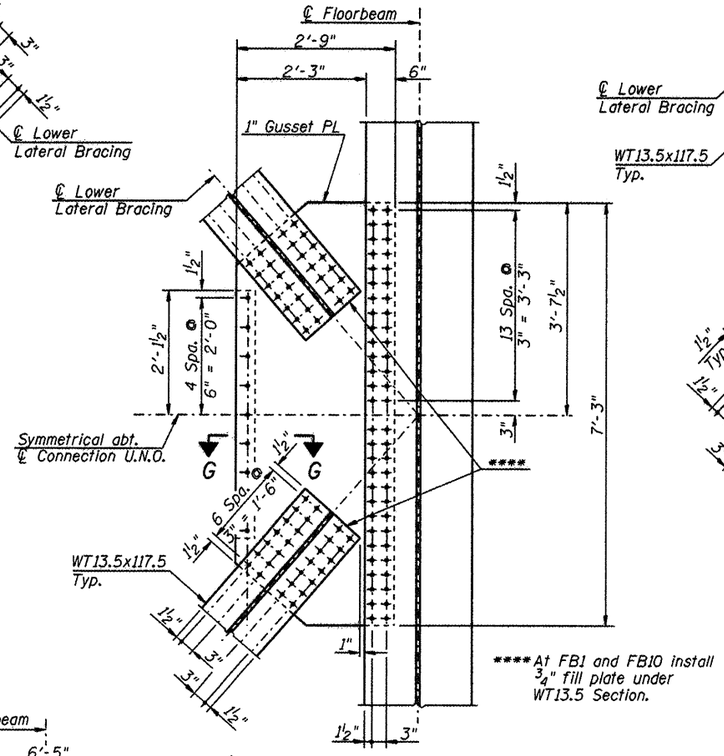

**** At FB1 and FB10 install ¾" fill plate under WT13.5 Section.

DETAIL C

Typical @ 8 Locations

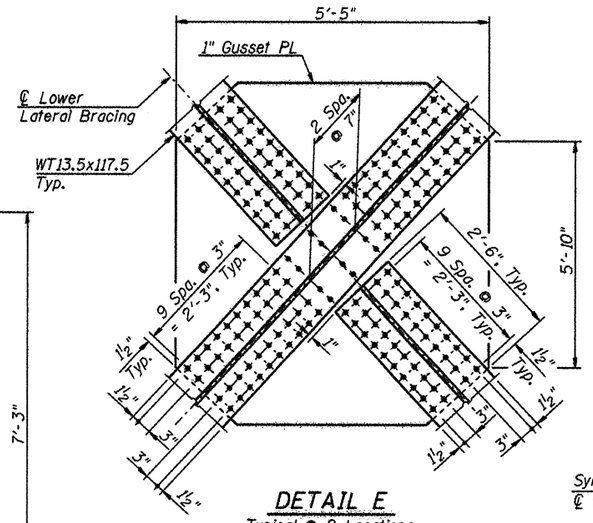

DETAIL E

Typical @ 2 Locations

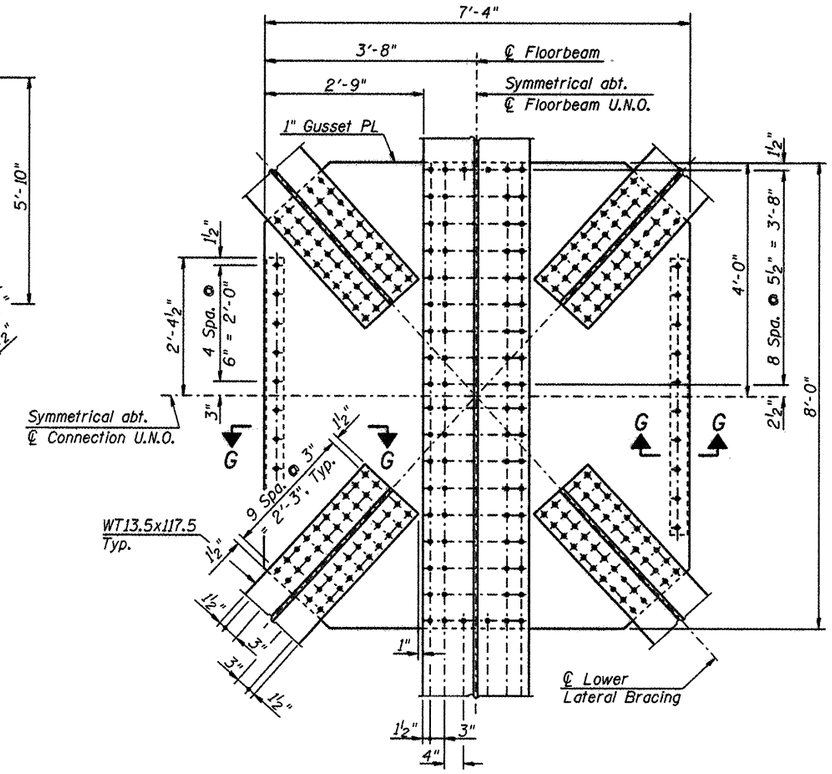

DETAIL D

Typical @ 2 Locations

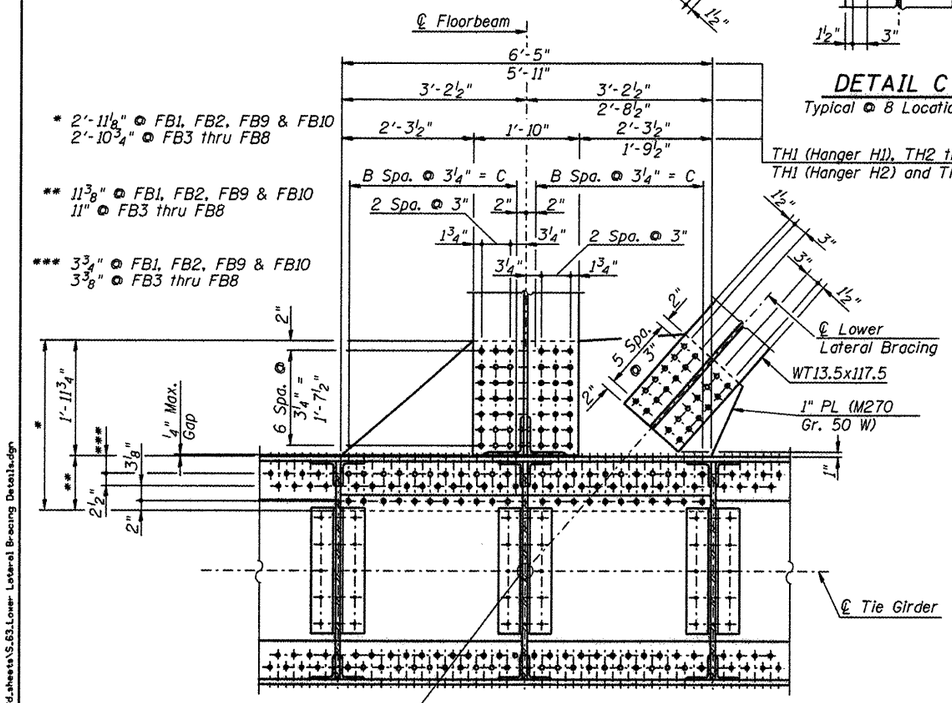

DETAIL F

Shown at Tie Girder Panel Point T3, EB
Other Locations Similar, Typical @ 20 Locations

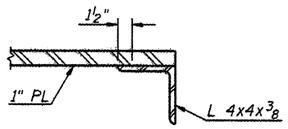

SECTION G-G

Notes:
- • Denotes ⅞" ϕ high-strength bolt.
- ∘ Denotes 1" ϕ high-strength bolt.

U.N.O. denotes Unless Noted Otherwise.
Lower Lateral Bracing plates shown in Details C, E and F, shall conform the requirements of M270 Gr. 50W U.N.O.
For locations of Details B, C, D, E & F, see Sheet 26 of 79.
For Tie Girder Details, see Sheets 41 thru 43 of 79.
For Floorbeam Details, see Sheets 54 thru 57 of 79.
Lower Lateral Bracing Members shall conform to the requirements of M270 Gr. 50W U.N.O.
For dimensions B and C, see Sheet 46 of 79.

H:\rockford\0826802\drawings\dd_sheets\S.63_Lower Lateral Bracing Details.dgn

CMT ©Copyright CMT, Inc.
CRAWFORD, MURPHY & TILLY, INC.
CONSULTING ENGINEERS
License No. 184-000613

HNTB

DESIGNED	PA, JDJ, BPD, CJW	REVISED	-
DRAWN	GLD	REVISED	-
CHECKED	RJK	REVISED	-
DATE	02/04/2011	REVISED	-

CITY OF ROCKFORD
MORGAN STREET BRIDGE

LOWER LATERAL BRACING DETAILS
STRUCTURE NO. 101-6108

SCALE: | SHEET NO. 62 OF 79 SHEETS | STA. 47+00.74 TO STA. 52+63.50

F.A.U. RTE.	SECTION	COUNTY	TOTAL SHEETS	SHEET NO.
5077	99-00493-00-BR	WINNEBAGO	253	188
		CONTRACT NO. 85529		

FED. ROAD DIST. NO. 2 | ILLINOIS | FED. AID PROJECT BRM-5099(65)

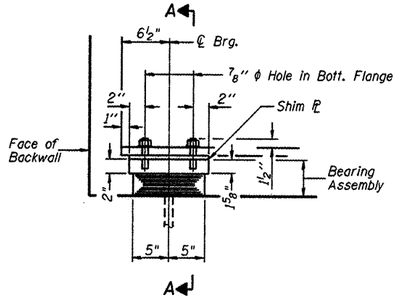

ELEVATION AT EAST ABUT.

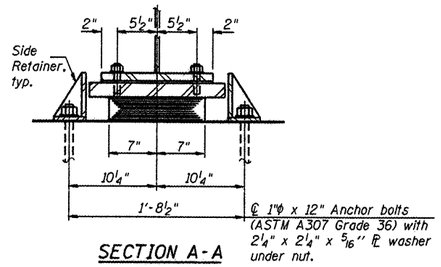

SECTION A-A

TYPE I ELASTOMERIC EXP. BRG.

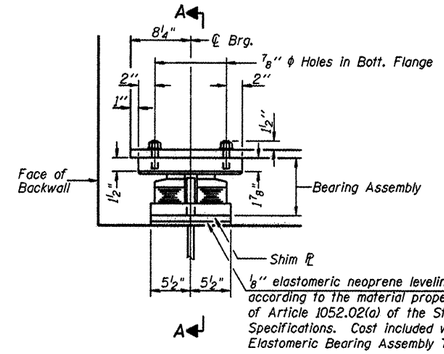

ELEVATION AT WEST ABUT.

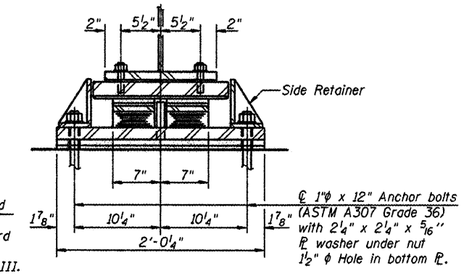

SECTION A-A

TYPE III ELASTOMERIC EXP. BRG.

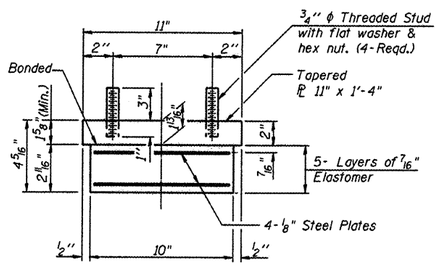

BEARING ASSEMBLY

Note:
Shim plates shall not be placed under Bearing Assembly.

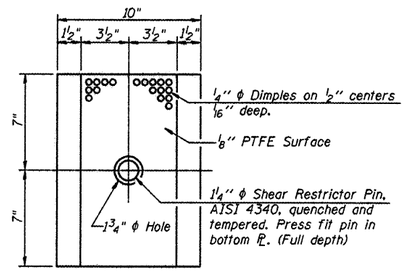

PLAN-PTFE ELASTOMERIC BRG.

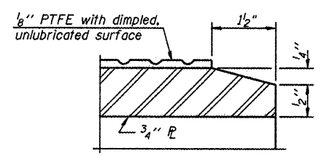

SECTION THRU PTFE

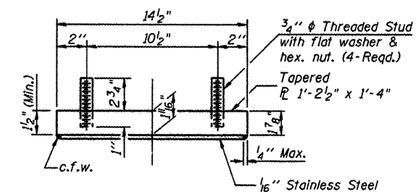

TOP BEARING ASSEMBLY

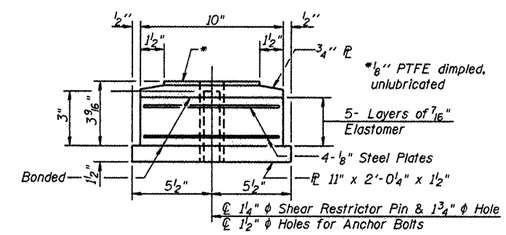

BOTTOM BEARING ASSEMBLY

Notes:

Anchor bolts shall be ASTM F1554 all-thread of the grade and diameter specified. ASTM A307 Grade C anchor bolts may be used in lieu of ASTM F1554 Grade 36 (Fy=36ksi). The corresponding specified grade of AASHTO M314 anchor bolts may be used in lieu of ASTM F1554.

Anchor bolts for Type III bearings shall be placed in holes drilled in the concrete through holes in the bottom bearing plate after members are in place. Side retainers shall be placed after bolts are installed.

Anchor bolts for side retainers may be cast in place or installed in holes drilled before or after members are in place for Type I bearings.

Drilled and set anchor bolts shall be installed according to Article 521.06 of the Standard Specifications.

Side retainers and other steel members required for the elastomeric bearing assembly shall be included in the cost of Elastomeric Bearing Assembly, Type I & Type III.

The ⅛" PTFE sheet shall be bonded directly to the top steel plate with a two-component, medium viscosity epoxy resin, conforming to the requirements of the Federal Specification MMM-A-134, Type I. The bond agent shall be applied on the full area of the contact surfaces.

Bonding of ⅛" PTFE sheet during vulcanizing process will be permitted provided the process and method of adjusting assembly height is approved by the Engineer.

The structural steel plates of the Bearing Assembly shall conform to the requirements of AASHTO M 270 Grade 50W.

Two ⅛ in. adjusting shims shall be provided for each bearing in addition to all other plates or shims and placed as shown on bearing details.

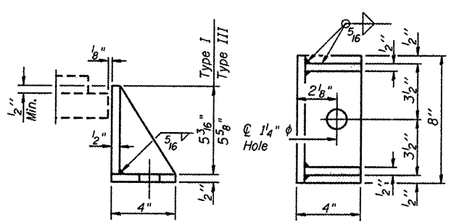

SIDE RETAINER FOR TYPE I & TYPE III

Equivalent rolled angle with stiffeners will be allowed in lieu of welded plates.

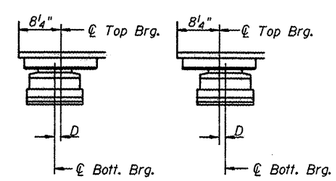

BELOW 50° F.
(Move bottom brg. away from fixed brg.)

ABOVE 50° F.
(Move bottom brg. toward fixed brg.)

SETTING ANCHOR BOLTS AT EXP. BRG.

D = ⅛" per each 100' of expansion for every 15° temp. change from the normal temp. of 50° F.

BILL OF MATERIAL

Item	Unit	Total
Elastomeric Bearing Assembly Type I	Each	9
Elastomeric Bearing Assembly Type III	Each	9
Anchor Bolts, 1"	Each	36

CMT ©Copyright CMT, Inc.
CRAWFORD, MURPHY & TILLY, INC.
CONSULTING ENGINEERS
License No. 184-000663

HNTB

DESIGNED - PA, JDJ, BPD, CJW	REVISED -		
DRAWN - GLD	REVISED -		
CHECKED - RJK	REVISED -		
DATE - 02/04/2011	REVISED -		

CITY OF ROCKFORD
MORGAN STREET BRIDGE

BEARING DETAILS – APPROACH SPANS
STRUCTURE NO. 101-6108

SCALE: | SHEET NO. 63 OF 79 SHEETS | STA. 47+00.74 TO STA. 52+63.50

F.A.U. RTE.	SECTION	COUNTY	TOTAL SHEETS	SHEET NO.
5077	99-00493-00-BR	WINNEBAGO	253	189
		CONTRACT NO. 85529		

FED. ROAD DIST. NO. 2 | ILLINOIS | FED. AID PROJECT BRM-5099(65)

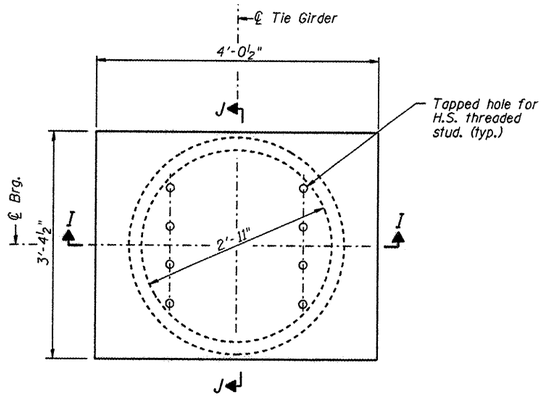

PLAN-TOP PISTON PLATE

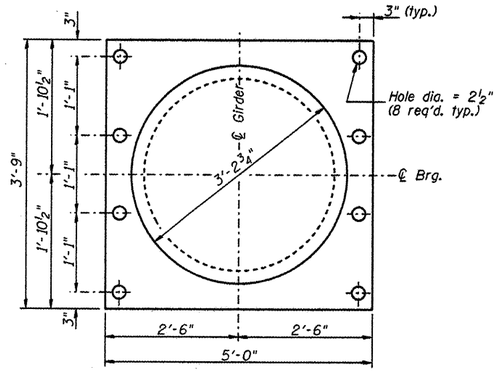

PLAN-MASONRY PLATE

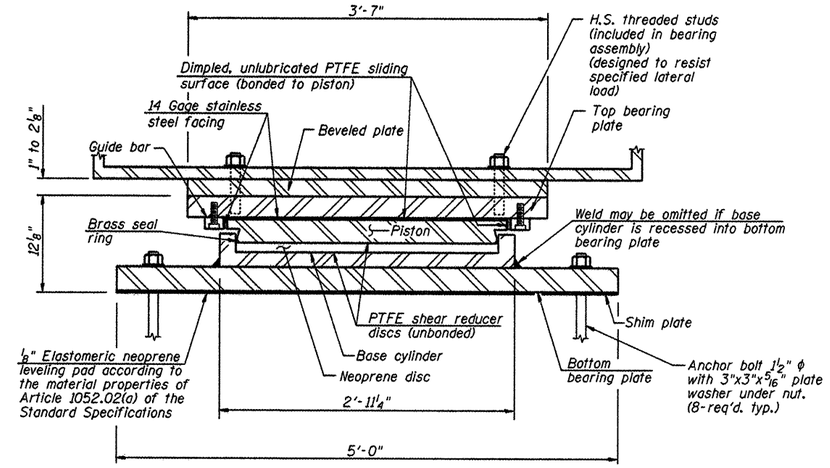

SECTION K-K

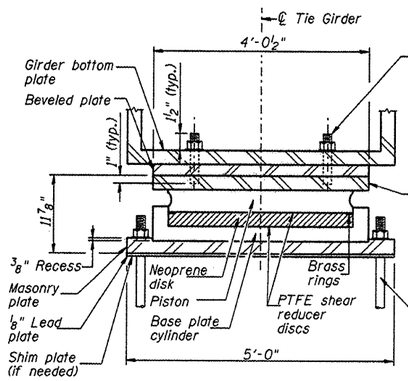

SECTION I-I

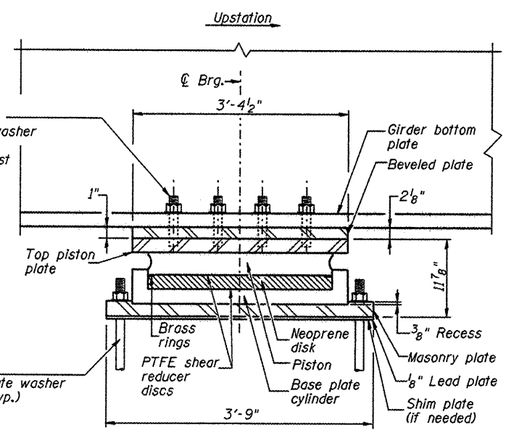

SECTION J-J

FIXED HLMR BEARING

(Pier 2)

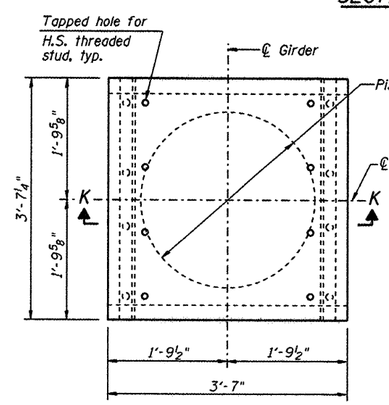

PLAN - TOP PISTON PLATE

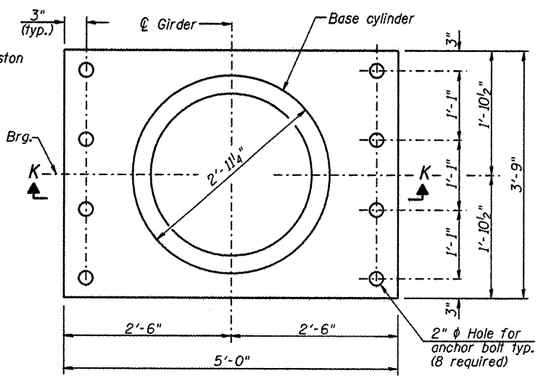

PLAN - MASONRY PLATE

GUIDED EXPANSION HLMR BEARING

(Pier 1)

NOTES:

Anchor bolts shall be ASTM F1554 all-thread 1½" ϕ x 18" (Pier 1) and 2" ϕ x 24" (Pier 2), Grade 105. The corresponding specified grade of AASHTO M314 anchor bolts may be used in lieu of ASTM F1554.

The structural steel plates of the Bearing Assembly shall conform to the requirements of AASHTO M 270 Grade 50W.

Two ⅛ in. adjusting shims shall be provided for each bearing in addition to all other plates or shims and placed as shown on bearing details.

BEARING LOADINGS

Location	Vert. Loads (kips)	Lat. Load (kips)
Pier 1	2,800	460
Pier 2	2,750	950

BILL OF MATERIAL

ITEM	UNIT	QUANTITY
High Load Multi-Rotational Bearing, Fixed - 2750K	Each	2
High Load Multi-Rotational Bearing, Guided Expansion - 2800K	Each	2
Anchor Bolts, 1½"	Each	16
Anchor Bolts, 2"	Each	16

L:\ROCKFORD\0826862\Ds-sw\CADD\Sheets\S-65-Bearing Detail_Arch.dgn

CMT ©Copyright CMT, Inc. CRAWFORD, MURPHY & TILLY, INC. CONSULTING ENGINEERS License No. 184-000613

HNTB

DESIGNED - PA, JDJ, BPD, CJW	REVISED -		
DRAWN - GLD	REVISED -		
CHECKED - RJK	REVISED -		
DATE - 02/04/2011	REVISED -		

CITY OF ROCKFORD
MORGAN STREET BRIDGE

BEARING DETAILS – ARCH SPAN
STRUCTURE NO. 101-6108

SCALE: | SHEET NO. 64 OF 79 SHEETS | STA. 47+00.74 TO STA. 52+63.50

F.A.U. RTE.	SECTION	COUNTY	TOTAL SHEETS	SHEET NO.
5077	99-00493-00-BR	WINNEBAGO	253	190

CONTRACT NO. 85529

FED. ROAD DIST. NO. 2 | ILLINOIS | FED. AID PROJECT BRM-5099(65)

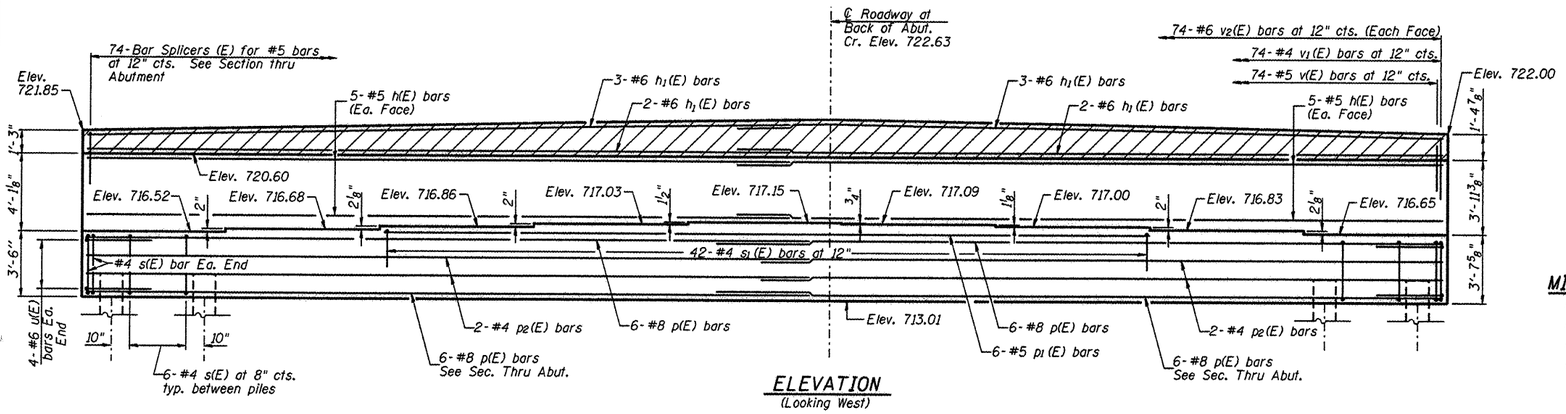

ELEVATION
(Looking West)

MIN. BAR LAPS

#4	=	2'-7"
#5	=	3'-3"
#6	=	3'-10"
#8	=	6'-9"

PILE DATA

Type: HP 12x53, with Pile Shoes
Nominal Required Bearing: 360k
Allowable Resistance Available: 120 k
Est. Length: 94'
No. Production Piles: 14
No. Test Piles: 1

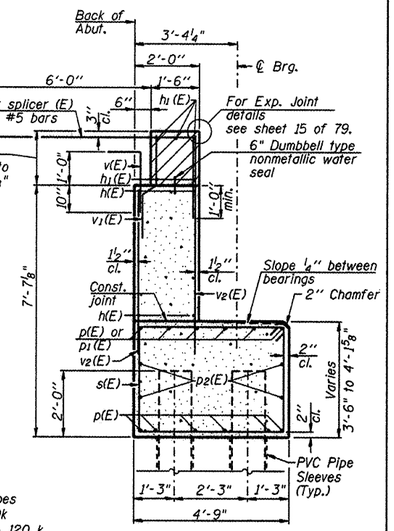

SECTION THRU WEST ABUTMENT

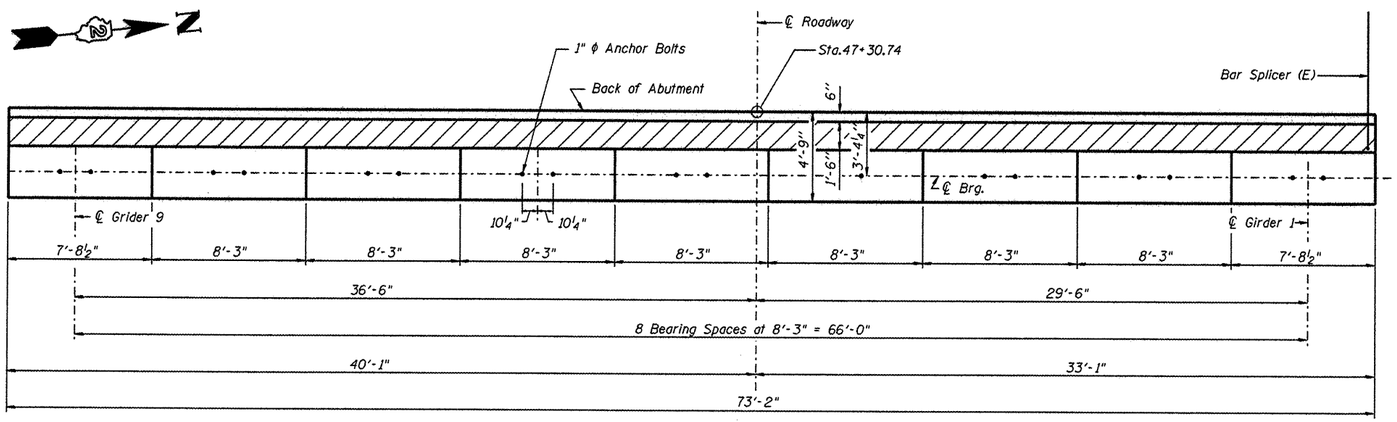

TOP VIEW

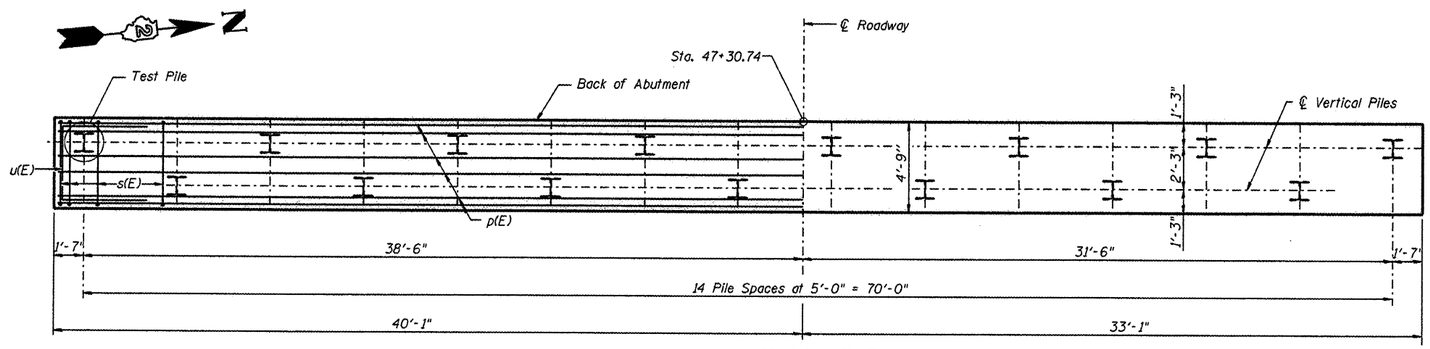

PLAN-PILE CAP

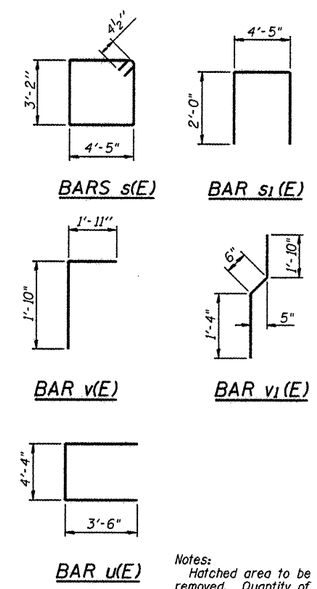

WEST ABUTMENT BILL OF MATERIAL

Bar	No.	Size	Length	Shape
h(E)	20	#5	38'-1"	
h1(E)	10	#6	38'-4"	
p(E)	24	#8	39'-10"	
p1(E)	6	#5	40'-11"	
p2(E)	8	#4	37'-9"	
s(E)	88	#4	15'-11"	
s1(E)	42	#4	8'-5"	
u(E)	8	#6	11'-4"	
v(E)	74	#5	3'-9"	
v1(E)	74	#4	3'-8"	
v2(E)	148	#6	6'-4"	
Concrete Structures			Cu. Yd.	69.9
Reinforcement Bars, Epoxy Coated			Pound	7,570
Furnishing Steel Piles HP 12x53			Foot	1,316
Driving Piles			Foot	1,316
Test Pile Steel HP 12x53			Each	1
Concrete Sealer			Sq. Ft.	890
Bar Splicers			Each	74
Pile Shoes			Each	15

For details of Bar Splicers, see sheet 76 of 79.
For details of piles, see sheet 75 of 79.

Notes:
Hatched area to be poured after superstructure false work has been removed. Quantity of concrete included with Concrete Superstructure.
Space reinforcement in cap to miss anchor bolts.
Pour steps monolithically with cap.
PVC Pipe Sleeves shall be provided for each pile in the West Abutment. Cost shall be included in Furnishing Steel Piles HP 12x53.

L:\ROCKFORD\06268B2\Dgn\C400_Sheets\S-66_West Abutment.dgn

CMT ©Copyright CMT, Inc. CRAWFORD, MURPHY & TILLY, INC. CONSULTING ENGINEERS License No. 184-000613

HNTB

DESIGNED	- PA, JDJ, BPD, CJW	REVISED	-
DRAWN	- GLD	REVISED	-
CHECKED	- RJK	REVISED	-
DATE	- 02/04/2011	REVISED	-

CITY OF ROCKFORD
MORGAN STREET BRIDGE

WEST ABUTMENT
STRUCTURE NO. 101-6108

SCALE: | SHEET NO. 66 OF 79 SHEETS | STA. 47+00.74 TO STA. 52+63.50

F.A.U. RTE.	SECTION	COUNTY	TOTAL SHEETS	SHEET NO.
5077	99-00493-00-BR	WINNEBAGO	253	192

CONTRACT NO. 85529

FED. ROAD DIST. NO. 2 | ILLINOIS | FED. AID PROJECT BRM-5099(65)

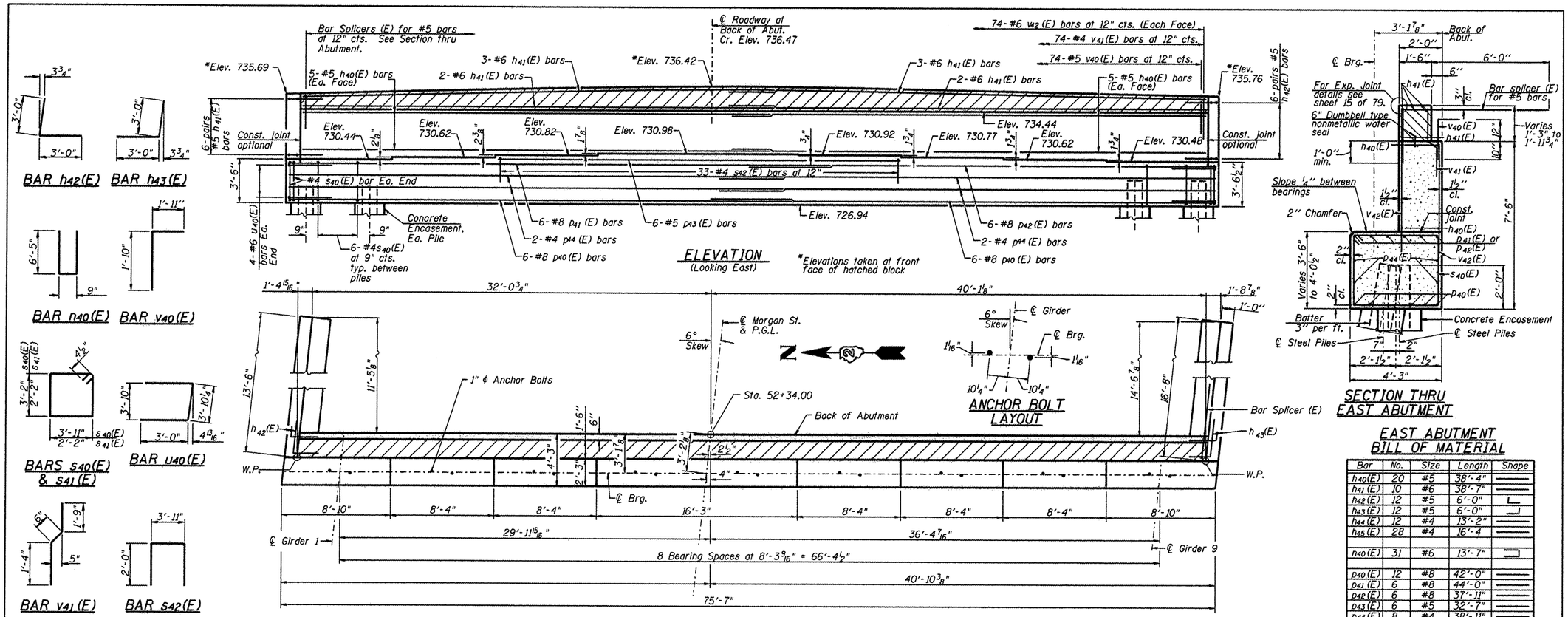

MIN. BAR LAPS

#4 = 2'-7"
#5 = 3'-3"
#6 = 3'-10"
#8 = 6'-9"

PILE DATA

Type: HP 12x53, with Pile Shoes
Nominal Required Bearing: 360k
Allowable Resistance Available: 120k
Est. Length: 55'
No. Production Piles: 17
No. Test Piles: 1

EAST ABUTMENT BILL OF MATERIAL

Bar	No.	Size	Length	Shape
h40(E)	20	#5	38'-4"	
h41(E)	10	#6	38'-7"	
h42(E)	12	#5	6'-0"	
h43(E)	12	#5	6'-0"	
h44(E)	12	#4	13'-2"	
h45(E)	28	#4	16'-4	
n40(E)	31	#6	13'-7"	
p40(E)	12	#8	42'-0"	
p41(E)	6	#8	44'-0"	
p42(E)	6	#8	37'-11"	
p43(E)	6	#5	32'-7"	
p44(E)	8	#4	38'-11"	
p45(E)	6	#7	13'-0"	
p46(E)	6	#7	16'-2"	
s40(E)	88	#4	14'-11"	
s41(E)	29	#4	9'-5"	
s42(E)	33	#4	7'-11"	
u40(E)	8	#6	9'-10"	
v40(E)	74	#5	3'-9"	
v41(E)	74	#4	3'-7"	
v42(E)	148	#6	6'-9"	
v43(E)	62	#6	5'-3"	
Bar Splicers			Each	74
Concrete Structures			Cu. Yd.	78.6
Reinforcement Bars, Epoxy Coated			Pound	9,640
Furnishing Steel Piles HP 12x53			Foot	935
Driving Piles			Foot	935
Test Pile Steel HP 12x53			Each	1
Concrete Encasement			Cu. Yd.	6.3
Concrete Sealer			Sq. Ft.	888
Pile Shoes			Each	18
Protective Coat			Sq. Yd.	34

For details of Bar Splicers, see sheet 76 of 79.
For details of piles and Concrete Encasement, see sheet 75 of 79.

Notes:
Hatched area to be poured after superstructure false work has been removed.
Quantity of concrete included with Concrete Superstructure.
Space reinforcement in cap to miss anchor bolts.
Four steps monolithically with cap.
Quantity of concrete in end post included with Concrete Superstructure.

CMT CRAWFORD, MURPHY & TILLY, INC. CONSULTING ENGINEERS License No. 184-000613

HNTB

DESIGNED - PA, JDJ, BPD, CJW	REVISED -		
DRAWN - GLD	REVISED -		
CHECKED - RJK	REVISED -		
DATE - 02/04/2011	REVISED -		

CITY OF ROCKFORD
MORGAN STREET BRIDGE

EAST ABUTMENT
STRUCTURE NO. 101-6108

SCALE: | SHEET NO. 67 OF 79 SHEETS | STA. 47+00.74 TO STA. 52+63.50

F.A.U. RTE.	SECTION	COUNTY	TOTAL SHEETS	SHEET NO.
5077	99-00493-00-BR	WINNEBAGO	253	193
		CONTRACT NO. 85529		

FED. ROAD DIST. NO. 2 | ILLINOIS | FED. AID PROJECT BRM-5099(65)

L:\ROCKFORD\8626802\Dgn\C400_Sheets\S_67_East Abutment.dgn

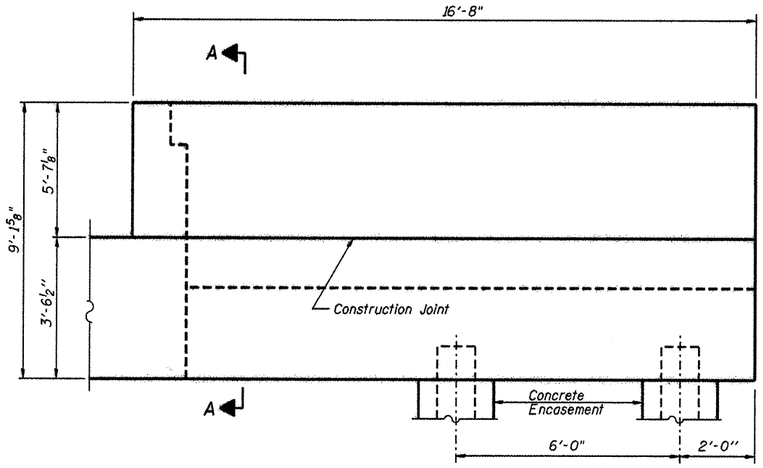

WING WALL ELEVATION
Showing Dimensions
(South Wing Looking North)

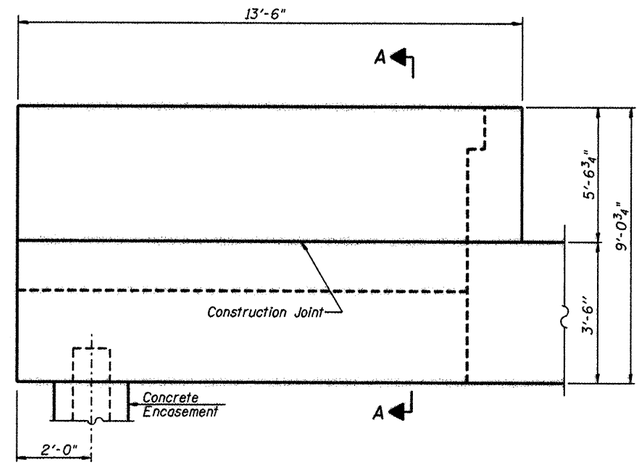

WING WALL ELEVATION
Showing Dimensions
(North Wing Looking South)

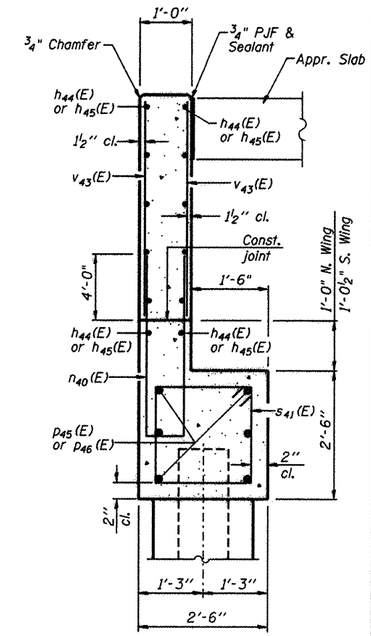

SECTION A-A

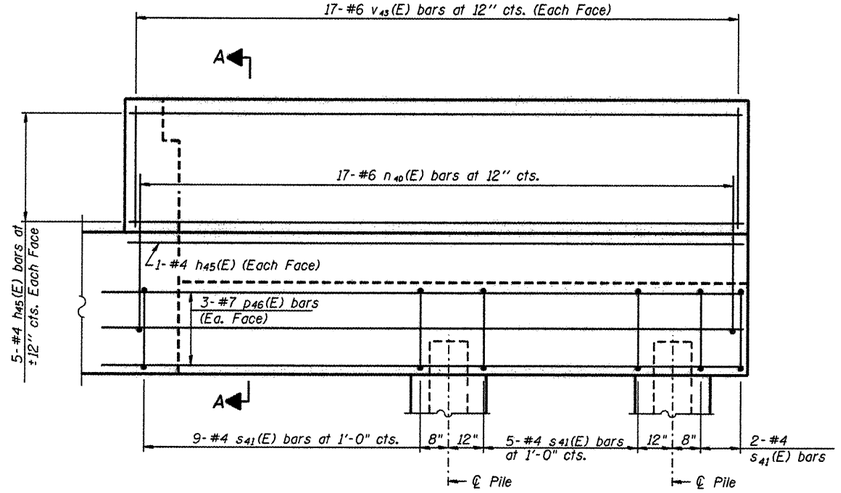

WING WALL ELEVATION
Showing Reinforcement
(South Wing Looking North)

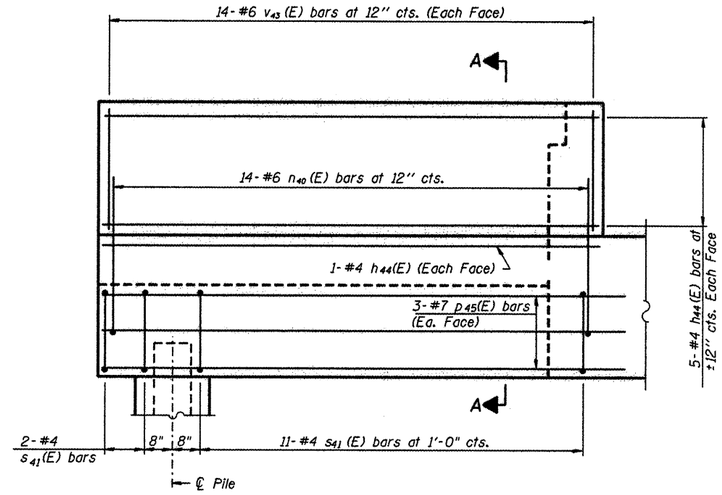

WING WALL ELEVATION
Showing Reinforcement
(North Wing Looking South)

L:\ROCKFORD\86268921\Drawings\C400.Sheets\S.68.Abutment Details.dgn

CMT ©Copyright CMT, Inc.
CRAWFORD, MURPHY & TILLY, INC.
CONSULTING ENGINEERS
License No. 184-000613

HNTB

DESIGNED	- PA, JDJ, BPD, CJW	REVISED	-
DRAWN	- GLD	REVISED	-
CHECKED	- RJK	REVISED	-
DATE	- 02/04/2011	REVISED	-

CITY OF ROCKFORD
MORGAN STREET BRIDGE

ABUTMENT DETAILS
STRUCTURE NO. 101-6108

SCALE: | SHEET NO. 68 OF 79 SHEETS | STA. 47+00.74 TO STA. 52+63.50

F.A.U. RTE.	SECTION	COUNTY	TOTAL SHEETS	SHEET NO.
5077	99-00493-00-BR	WINNEBAGO	253	194

CONTRACT NO. 85529

FED. ROAD DIST. NO. 2 | ILLINOIS | FED. AID PROJECT BRM-5099(65)

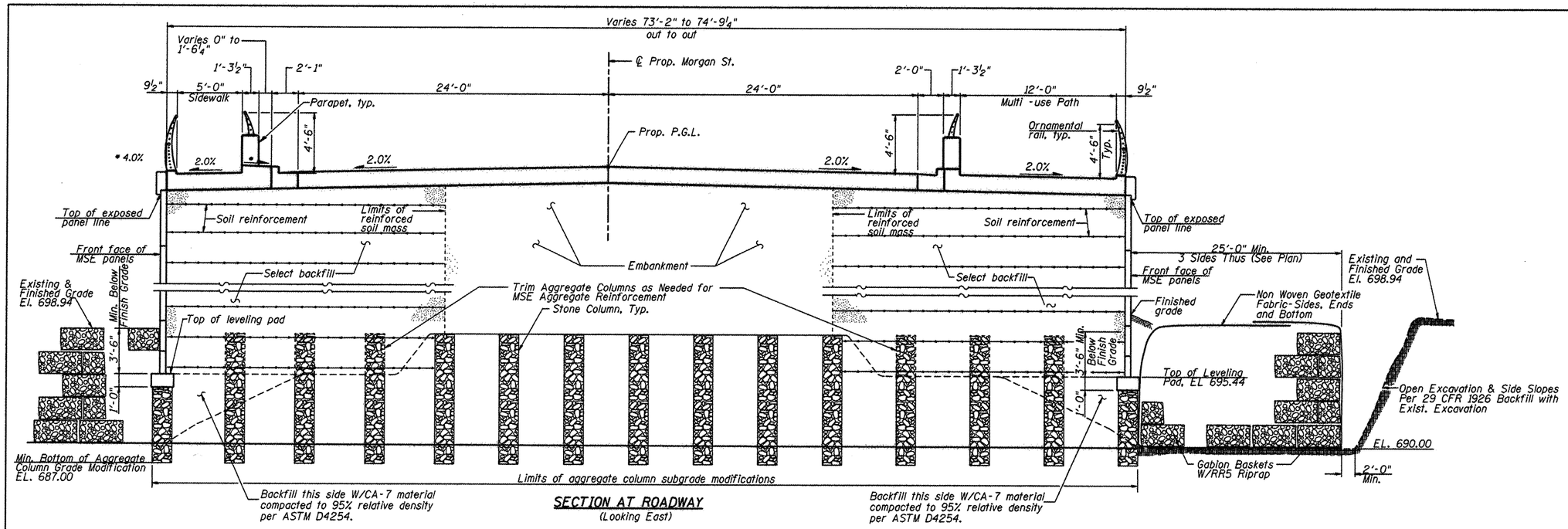

SECTION AT ROADWAY
(Looking East)

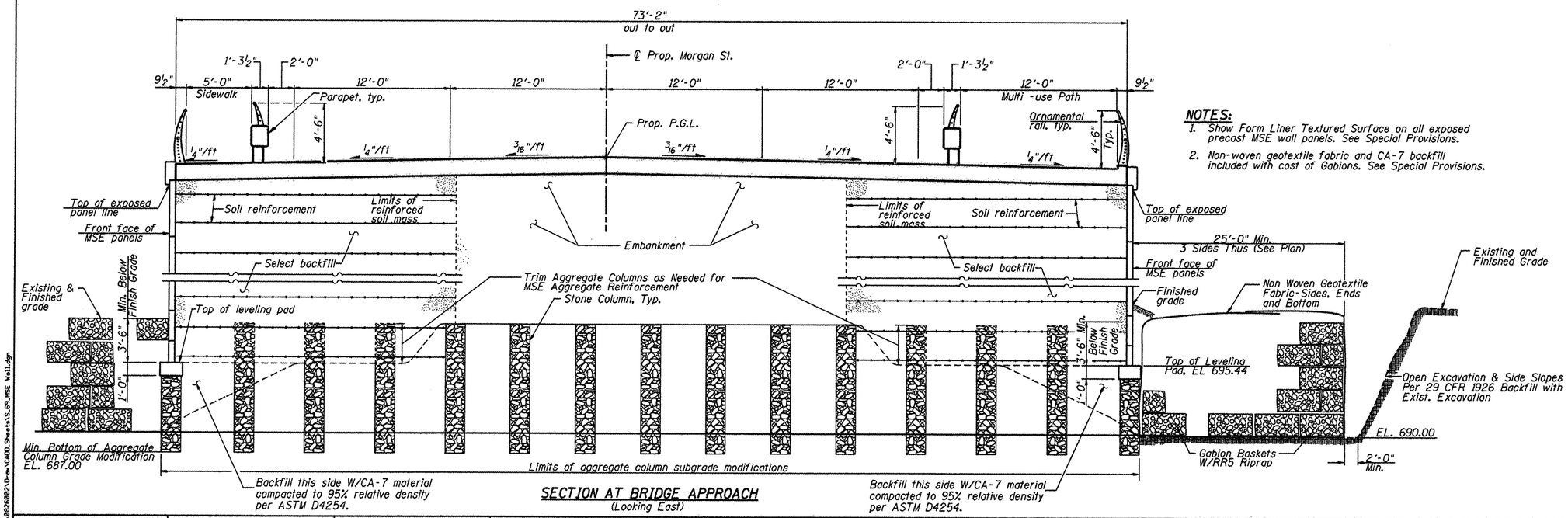

SECTION AT BRIDGE APPROACH
(Looking East)

NOTES:

1. Show Form Liner Textured Surface on all exposed precast MSE wall panels. See Special Provisions.
2. Non-woven geotextile fabric and CA-7 backfill included with cost of Gabions. See Special Provisions.

L:\ROCKFORD\B8268982\Drwg\CADD.Sheets\S.69.MSE Wall.dgn

CMT ©Copyright CMT, Inc.
CRAWFORD, MURPHY & TILLY, INC.
CONSULTING ENGINEERS
License No. 184-000613

HNTB

DESIGNED - PA, JDJ, BPD, CJW	REVISED -		
DRAWN - GLD	REVISED -		
CHECKED - RJK	REVISED -		
DATE - 02/04/2011	REVISED -		

CITY OF ROCKFORD
MORGAN STREET BRIDGE

MSE WALL DETAILS - I
STRUCTURE NO. 101-6108

SCALE: | SHEET NO. 69 OF 79 SHEETS | STA. 47+00.74 TO STA. 52+63.50

F.A.U. RTE.	SECTION	COUNTY	TOTAL SHEETS	SHEET NO.
5077	99-00493-00-BR	WINNEBAGO	253	195
		CONTRACT NO. 85529		
FED. ROAD DIST. NO. 2	ILLINOIS	FED. AID PROJECT BRM-5099(65)		

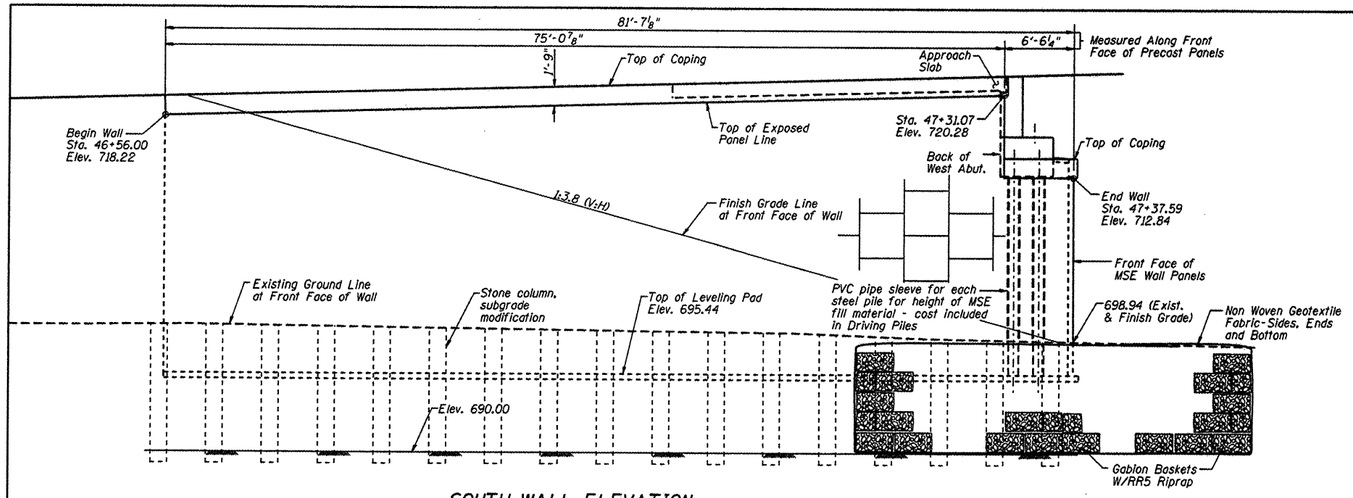

SOUTH WALL ELEVATION
(Looking North)

Note:
Show Form Liner Textured Surface on all exposed precast MSE wall panels.

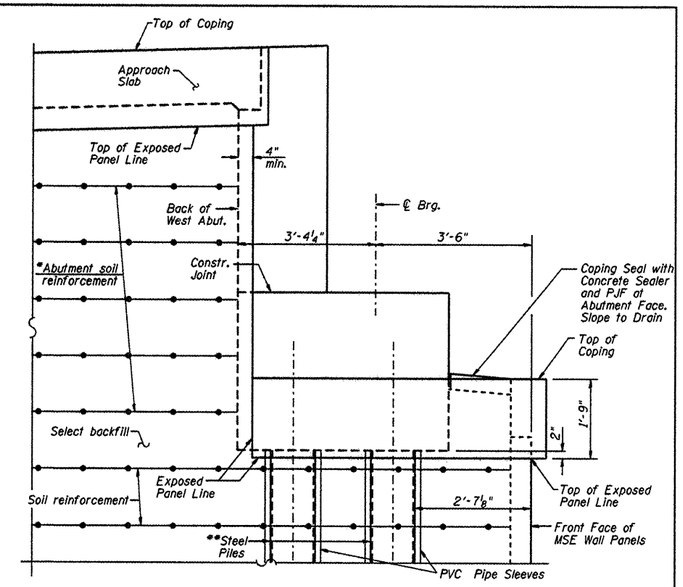

SECTION THRU ABUTMENT

*The M.S.E. wall supplier shall design the abutment soil reinforcement to resist a horizontal force of 2.1 kips/ft. of abutment.

** Piles shall be driven prior to placement of the reinforced select fill and coated with coal tar epoxy from the bottom of the select fill to 1" above the base of the abutment. The cost of the coal tar epoxy coating shall be included with the cost of the Furnishing Piles.

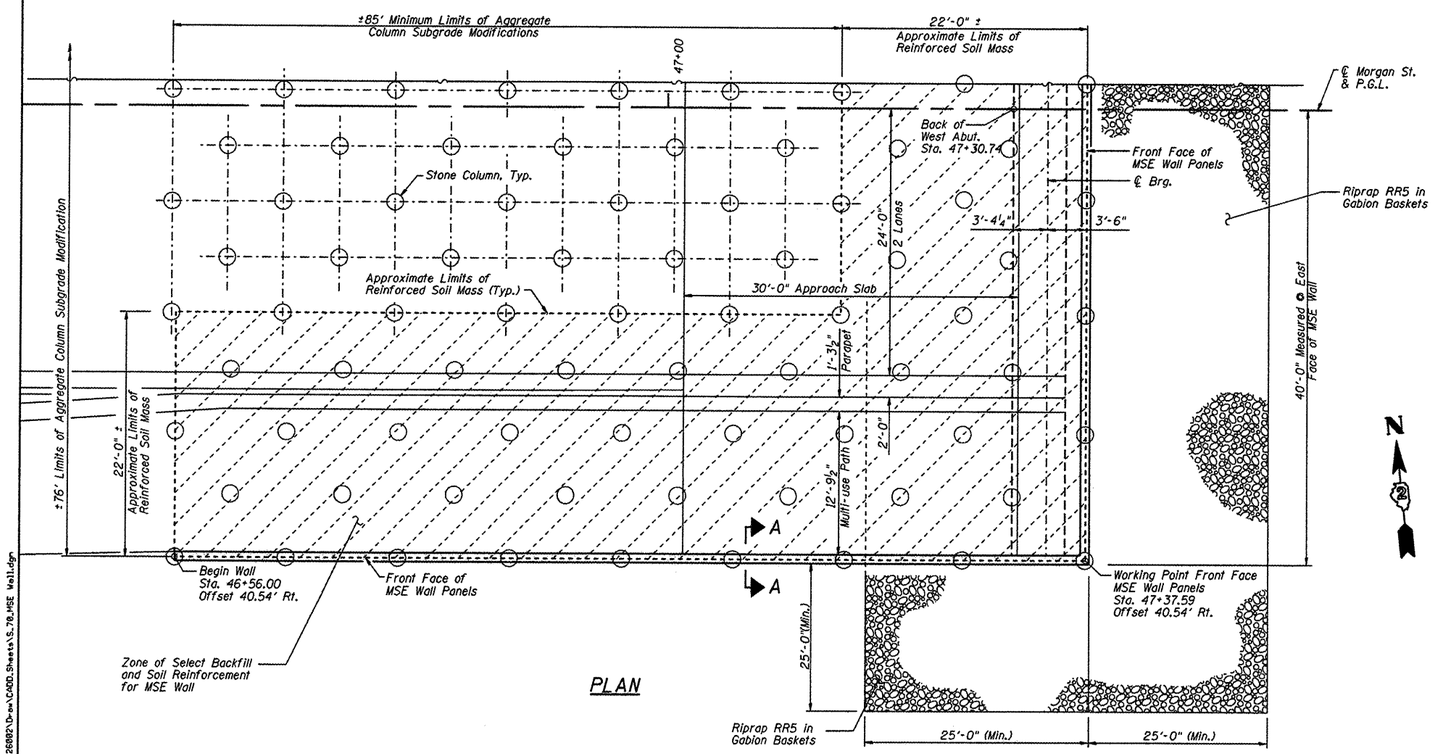

PLAN

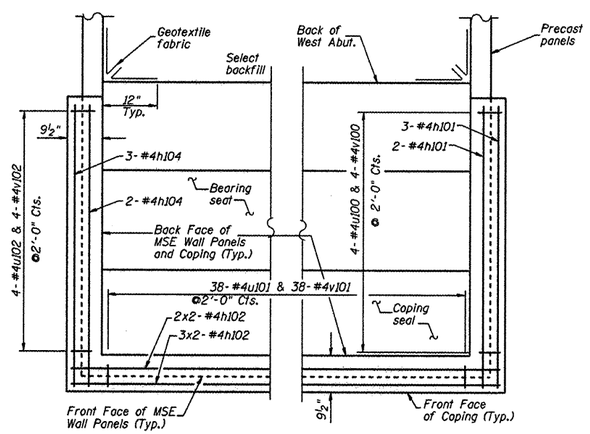

COPING REINFORCEMENT PLAN AT ABUTMENT

L:\ROCKFORD\0826882\Dgns\CADD_Sheets\S_78_MSE Wall.dgn

CMT ©Copyright CMT, Inc.
CRAWFORD, MURPHY & TILLY, INC.
CONSULTING ENGINEERS
License No. 184-000613

HNTB

DESIGNED	- PA, JDJ, BPD, CJW	REVISED	-
DRAWN	- GLD	REVISED	-
CHECKED	- RJK	REVISED	-
DATE	- 02/04/2011	REVISED	-

CITY OF ROCKFORD
MORGAN STREET BRIDGE

MSE WALL DETAILS – II
STRUCTURE NO. 101-6108

SCALE: | SHEET NO. 70 OF 79 SHEETS | STA. 47+00.74 TO STA. 52+63.50

F.A.U. RTE.	SECTION	COUNTY	TOTAL SHEETS	SHEET NO.
5077	99-00493-00-BR	WINNEBAGO	253	196
		CONTRACT NO. 85529		
FED. ROAD DIST. NO. 2	ILLINOIS	FED. AID PROJECT BRM-5099(165)		

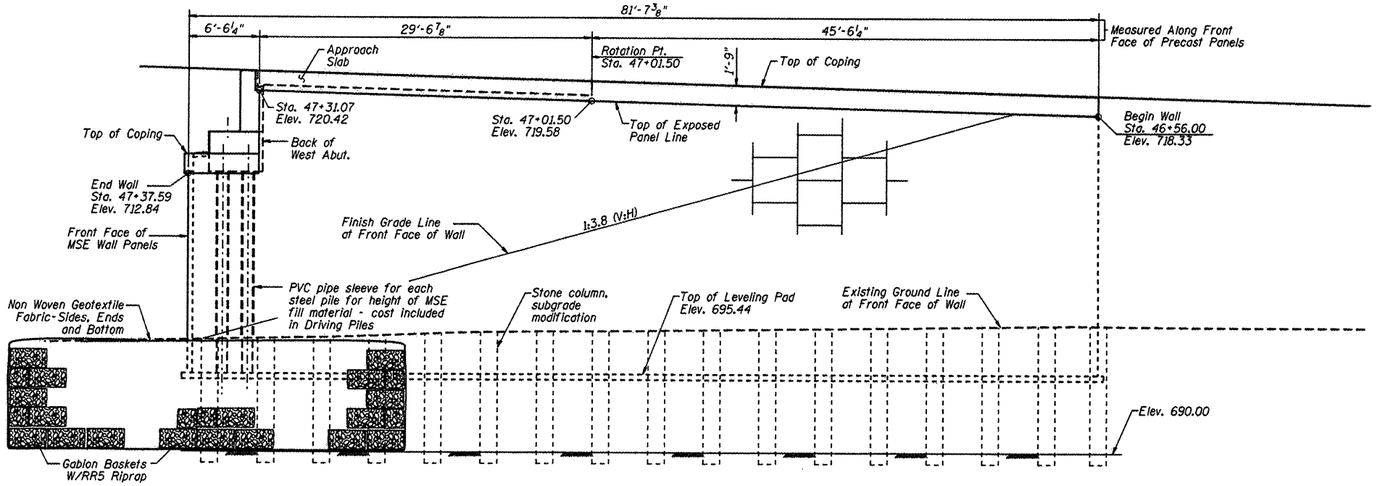

NORTH WALL ELEVATION

(Looking South)

Note:
Show Form Liner Textured Surface on all exposed precast MSE wall panels.

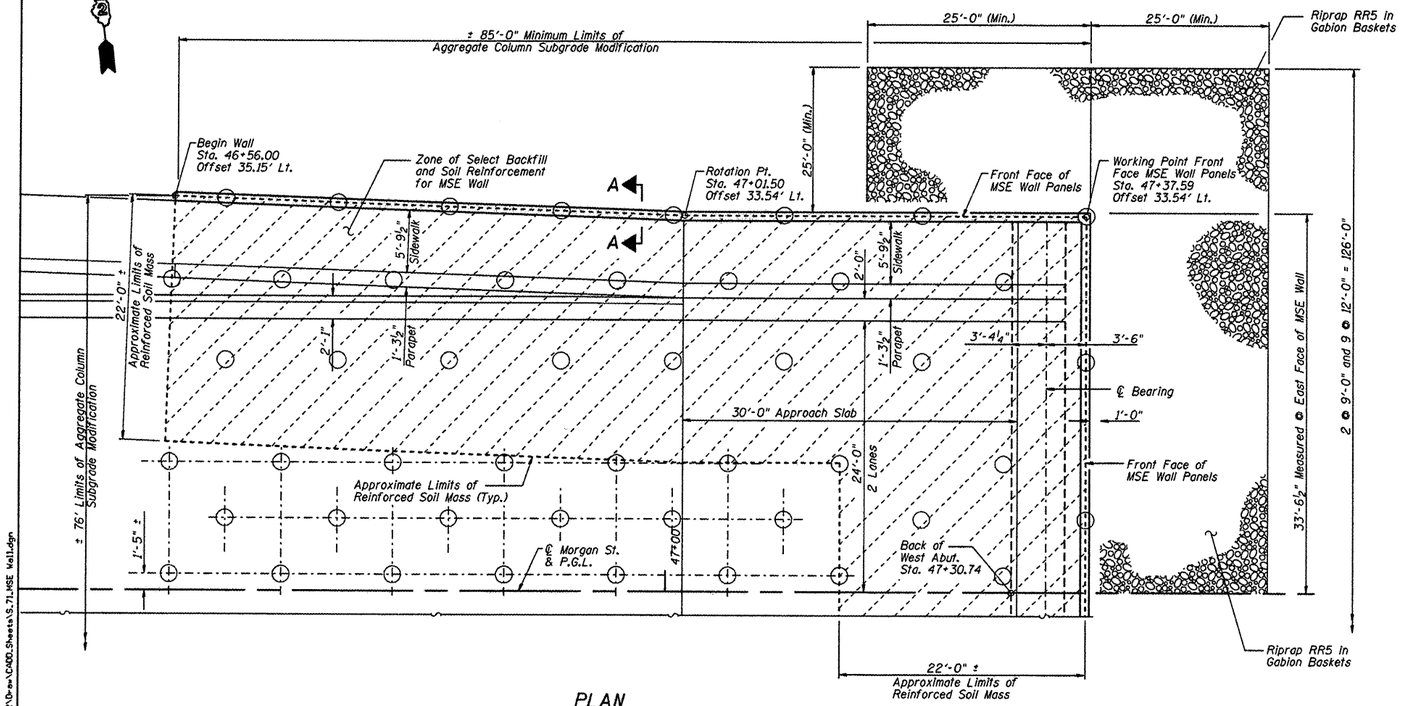

PLAN

C.I.P. COPING BILL OF MATERIAL *

Bar	No.	Size	Length	Shape	Wall
h100	10	#4	39'-0"		North
h101	5	#4	6'-3"		North
h102	10	#4	38'-6"		Abutment
h103	10	#4	39'-0"		South
h104	5	#4	6'-3"		South
u100	43	#4	2'-11 1/2"		North
u101	38	#4	2'-11 1/2"		Abutment
u102	43	#4	2'-11 1/2"		South
v100	43	#4	1'-5"		North
v101	38	#4	1'-5"		Abutment
v102	43	#4	1'-5"		South
Concrete Structures			Cu. Yd.	10.9	
Reinforcing Steel			Pound	1,180	
Concrete Sealer			Sq. Ft.	120	

* For information purposes only. Cost of C.I.P. Coping and Coping Seal Concrete including: Concrete Stuctures, Reinforcing Steel and Concrete Sealer will be included for payment in the contract unit price for Mechanically Stabilized Earth Retaining Wall.

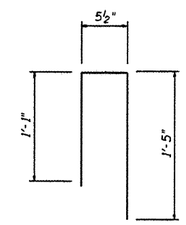

BAR u100, u101, & u102

MIN BAR LAPS

#4 = 2'-7"

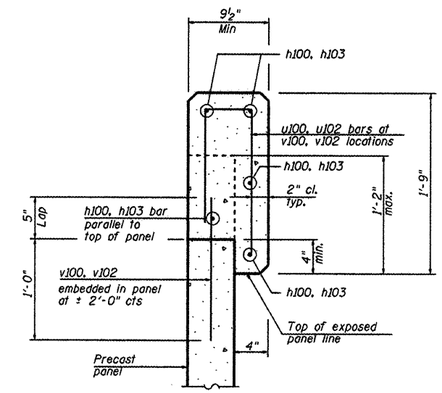

SECTION A-A

AGGREGATE COLUMN GROUND IMPROVEMENT PERFORMANCE CRITERIA

1. Maximum total settlement not to exceed 1 inch (differential settlement 0.6 inch) after completing wall and embankment construction.
2. Bearing Capacity 3,500 psf minimum.
3. Seismic Data:
   a) Seismic Performance Category (SPC) = A
   b) Horiz. Bedrock Acceleration Coefficient (A) = 0.033g
   c) Site Coefficient (S) = 1.2

BILL OF MATERIAL

Mechanically Stabilized Earth Retaining Wall	Sq. Yd.	5,163
Gabions	Cu. Yd.	1,450

L:\ROCKFORD\05026802\D-ow\C400-Sheets\S-71_MSE Wall.dgn

CMT ©Copyright CMT, Inc.
CRAWFORD, MURPHY & TALLY, INC.
CONSULTING ENGINEERS
License No. 184-000613

HNTB

DESIGNED	- PA, JDJ, BPD, CJW	REVISED	-
DRAWN	- GLD	REVISED	-
CHECKED	- RJK	REVISED	-
DATE	- 02/04/2011	REVISED	-

CITY OF ROCKFORD
MORGAN STREET BRIDGE

MSE WALL DETAILS – III
STRUCTURE NO. 101-6108

SCALE: | SHEET NO. 71 OF 79 SHEETS | STA. 47+00.74 TO STA. 52+63.50

F.A.U. RTE.	SECTION	COUNTY	TOTAL SHEETS	SHEET NO.
5077	99-00493-00-BR	WINNEBAGO	253	197

CONTRACT NO. 85529

FED. ROAD DIST. NO. 2 | ILLINOIS | FED. AID PROJECT BRM-5099(165)

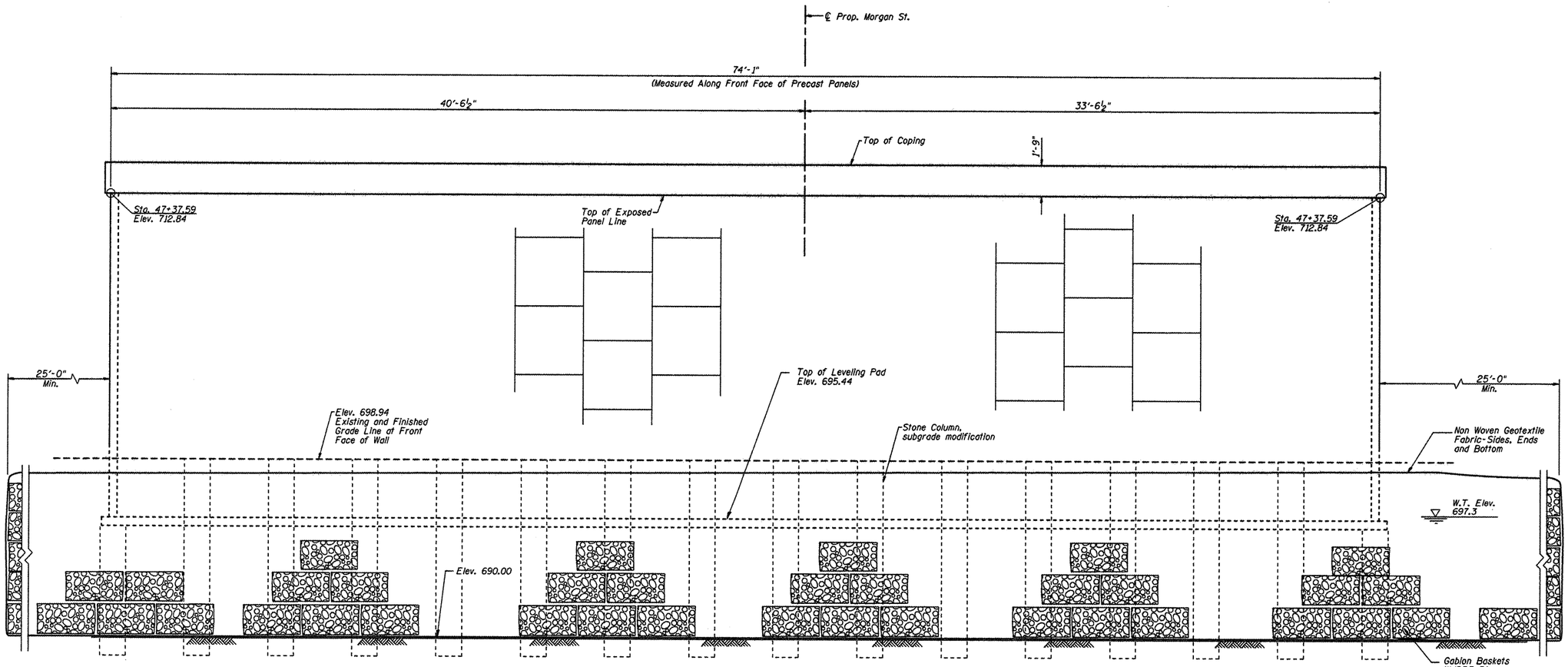

WALL AT ABUTMENT ELEVATION

(Looking West)

CONSTRUCTION SEQUENCE (THREE SIDES)

1. This sequence to commence following removal of existing structure.
2. Excavate existing material to elevation 690.00. Horizontal limits to be in accordance with plan view.
3. Sides of excavation can be open excavated in accordance with OSHA 29 CFR 1926.
4. Install Gabion baskets with RR-5 Riprap Material to limits shown on the plan.
5. Outside limits of excavation: backfill and compact open excavated sides with existing material.
6. Inside limits of excavation, adjacent to the MSE wall footings: backfill with CA-7 material.
7. Furnish and install subgrade modification system to consist of Aggregate Ground Improvement elements in accordance with the drawings and Special Provisions. Limits of Aggregate Ground Improvement system to be in accordance with the plan view shown on the drawings or as modified by the approved submittal from the Aggregate Ground Improvement Contractor.
8. Construct MSE wall system to the lines and grades shown.
9. Construct remaining bridge approach embankment to the lines and grades shown.
10. Post install any remaining RR-5 Riprap between face of MSE wall and face of Gabion baskets to lines and grades shown, three sides thus.

AGGREGATE COLUMN GROUND IMPROVEMENT PERFORMANCE CRITERIA

1. Maximum total settlement not to exceed 1 inch (differential settlement 0.6 inch) after completing wall and embankment construction.
2. Bearing Capacity 3,500 psf minimum.
3. Seismic Data:
   a. Seismic Performance Category (SPC) = A
   b. Horiz. Bedrock Acceleration Coefficient (A) = 0.033g
   c. Site Coefficient (S) = 1.2

L:\ROCKFORD\B0258982\Dwg\CADD.Sheets\S_72_MSE Wall.dgn

CMT ©Copyright CMT, Inc.
CRAWFORD, MURPHY & TILLY, INC.
CONSULTING ENGINEERS
License No. 184-000613

HNTB

DESIGNED - PA, JDJ, BPD, CJW	REVISED -		
DRAWN - GLD	REVISED -		
CHECKED - RJK	REVISED -		
DATE - 02/04/2011	REVISED -		

CITY OF ROCKFORD
MORGAN STREET BRIDGE

MSE WALL DETAILS – IV
STRUCTURE NO. 101-6108

SCALE: | SHEET NO. 72 OF 79 SHEETS | STA. 47+00.74 TO STA. 52+63.50

F.A.U. RTE.	SECTION	COUNTY	TOTAL SHEETS	SHEET NO.
5077	99-00493-00-BR	WINNEBAGO	253	198
		CONTRACT NO. 85529		

FED. ROAD DIST. NO. 2 | ILLINOIS | FED. AID PROJECT BRM-5099(65)

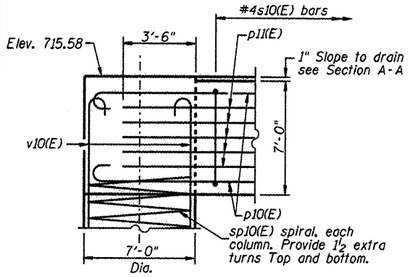

DETAIL 1

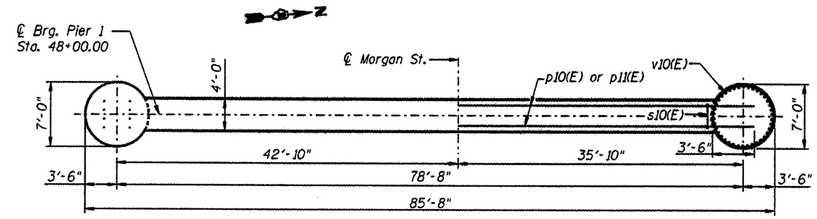

PLAN

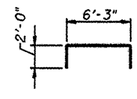

BARS u10 (E)

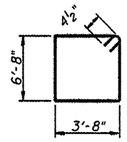

BARS s10 (E)

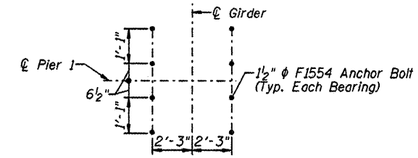

ANCHOR BOLT INSTALLATION DETAIL

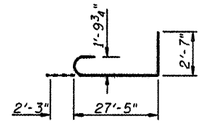

BAR v10 (E)

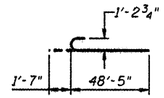

BAR p10 (E)

PIER 1
BILL OF MATERIAL

Bar	No.	Size	Length	Shape
p10 (E)	32	#11	50'-0"	
p11 (E)	20	#6	41'-4"	
s10 (E)	96	#4	21'-5"	
sp10 (E)	2	#5	1127'-0"	
t10 (E)	92	#11	27'-6"	
t11 (E)	62	#8	27'-6"	
u10 (E)	212	#6	10'-3"	
v10 (E)	68	#14	32'-3"	
w10 (E)	92	#11	24'-6"	
w11 (E)	68	#8	24'-6"	
Cofferdam Excavation			Cu. Yd.	1130
Concrete Structures			Cu. Yd.	498.2
Seal Coat Conrete			Cu. Yd.	229.1
Form Liner Textured Surface			Sq. Ft.	880
Reinforcement Bars, Epoxy Coated			Pound	67,930
Furnishing Piles, HP 12X53			Foot	8924
Driving Piles			Foot	8924
Test Pile Steel HP 12x53			Each	1
Pile Shoes			Each	98

For details of piles and Concrete Encasement, see sheet 75 of 79.

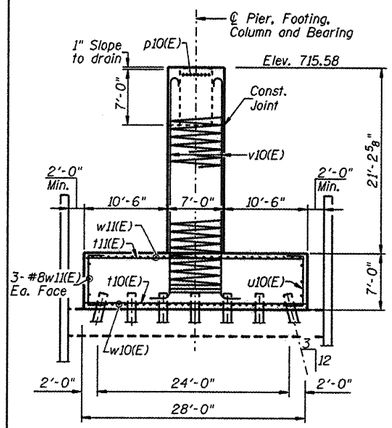

END VIEW
(Looking North)

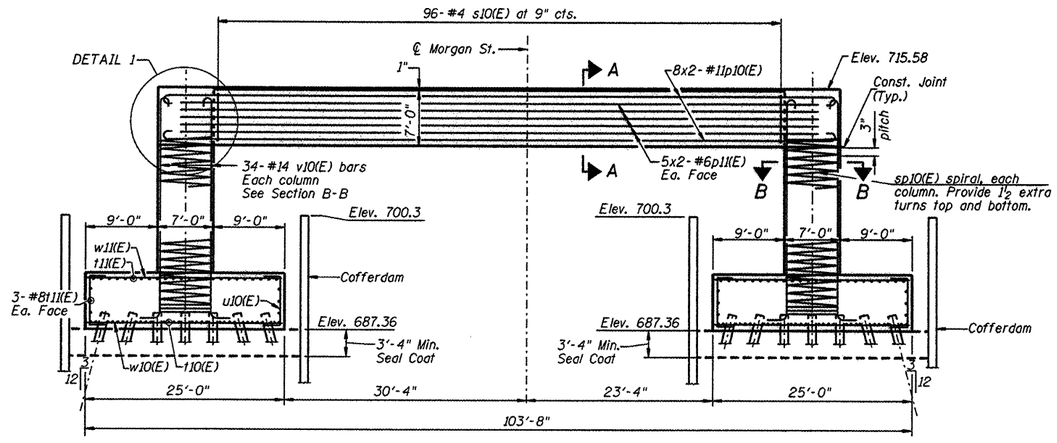

ELEVATION

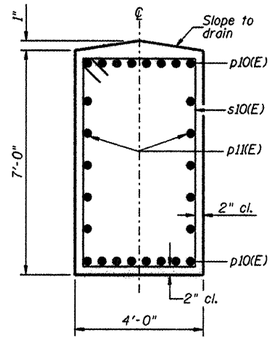

SECTION A-A

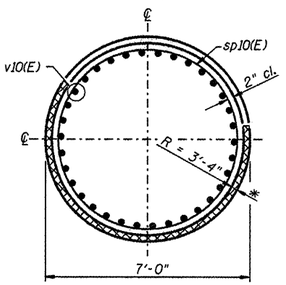

SECTION B-B

*2" Allowance for concrete form liner. Form liner is not allowed to intrude on 3'-4" radius. Additional concrete required will be paid for under Form Liner Textured Surface.

Notes:

The Contractor shall make allowance for the deflection of forms, shrinkage and settlement of falsework, and allowance for dead load deflection in construction of the pier tie beam.

Seal coat thickness design is based on the Estimated Water Surface Elevation (EWSE). Cofferdam design details and proposed changes in seal coat thickness shall be submitted to the Engineer for approval with the cofferdam design.

MIN. BAR LAPS

#6 = 3'-10"
#11 = 13'-7"

PILE DATA

Type: HP 12x53, with Pile Shoes
Nominal Required Bearing: 360 Kips
Allowable Resistance Available: 119 Kips
Est. Length: 92 ft.
No. Production Piles: 97
No. Test Piles: 1

BEARING SEAT ELEVATIONS

LOCATION	ELEVATION
Column 1	715.58
Column 2	715.58

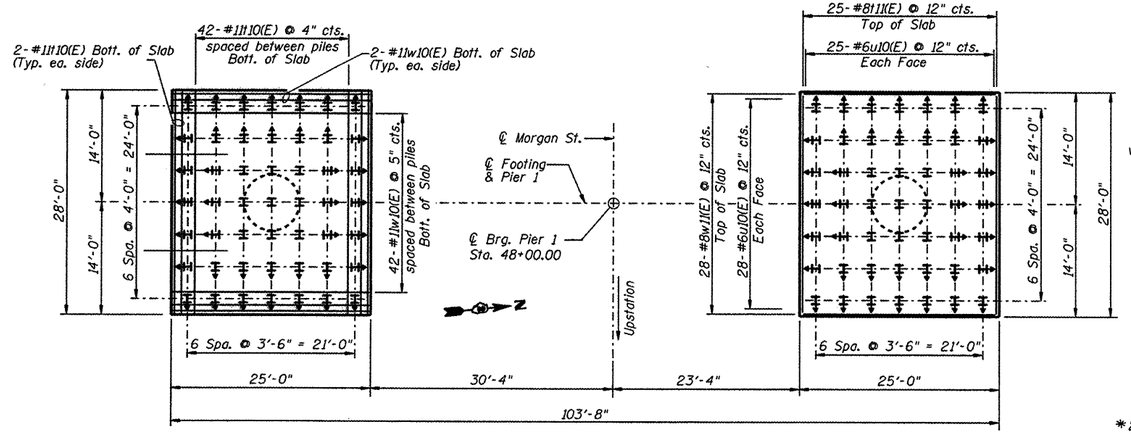

FOOTING PLAN

L:\ROCKFORD\0836892\D-ew\C400.Sheets\S.73.Pier 1.dgn

CMT ©Copyright CMT, Inc.
CRAWFORD, MURPHY & TILLY, INC.
CONSULTING ENGINEERS
License No. 184-000613

HNTB

DESIGNED - PA, JDJ, BPD, CJW	REVISED -		
DRAWN - GLD	REVISED -		
CHECKED - RJK	REVISED -		
DATE - 02/04/2011	REVISED -		

CITY OF ROCKFORD
MORGAN STREET BRIDGE

PIER - 1
STRUCTURE NO. 101-6108

SCALE: | SHEET NO. 73 OF 79 SHEETS | STA. 47+00.74 TO STA. 52+63.50

F.A.U. RTE.	SECTION	COUNTY	TOTAL SHEETS	SHEET NO.
5077	99-00493-00-BR	WINNEBAGO	253	199
		CONTRACT NO. 85529		

FED. ROAD DIST. NO. 2 | ILLINOIS | FED. AID PROJECT BRM-5099(65)

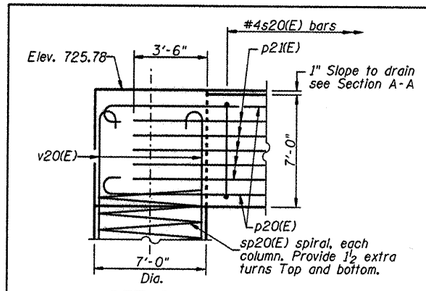

DETAIL 1

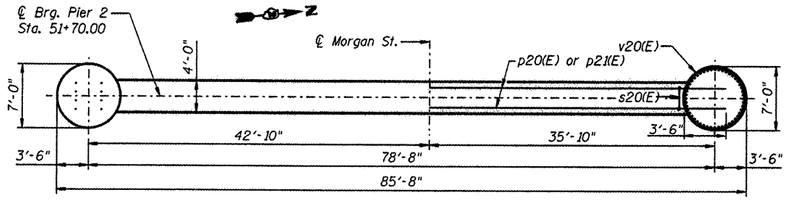

PLAN

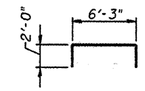

BARS u20(E)

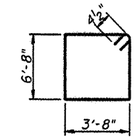

BARS s20(E)

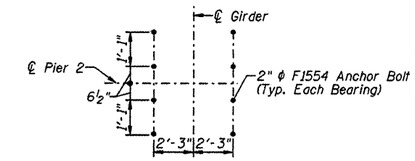

ANCHOR BOLT INSTALLATION DETAIL

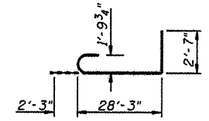

BAR v20(E)

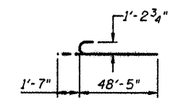

BAR p20(E)

PIER 2
BILL OF MATERIAL

Bar	No.	Size	Length	Shape
p20(E)	32	#11	50'-0"	
p21(E)	20	#6	41'-4"	
s20(E)	96	#4	21'-5"	
sp20(E)	2	#5	1167'-0"	
t20(E)	92	#11	27'-6"	
t21(E)	62	#8	27'-6"	
u20(E)	212	#6	10'-3"	
v20(E)	68	#14	33'-1"	
w20(E)	92	#11	24'-6"	
w21(E)	68	#8	24'-6"	
Structure Excavation			Cu. Yd.	1169
Concrete Structures			Cu. Yd.	500.7
Form Liner Textured Surface			Sq. Ft.	748
Reinforcement Bars, Epoxy Coated			Pound	68,450
Furnishing Piles, HP 12X53			Foot	9021
Driving Piles			Foot	9021
Test Pile Steel HP 12x53			Each	1
Pile Shoes			Each	98

For details of piles and Concrete Encasement, see sheet 75 of 79.

Notes:
1. The Contractor shall make allowance for the deflection of forms, shrinkage and settlement of falsework, and allowance for dead load deflection in construction of the pier tie beam.
2. Should the Contractor deem that dewatering is necessary or that a temporary cofferdam or temporary excavation support system is necessary to complete the work, the Contractor shall include such costs with Driving Piles. No additional compensation will be considered or made.

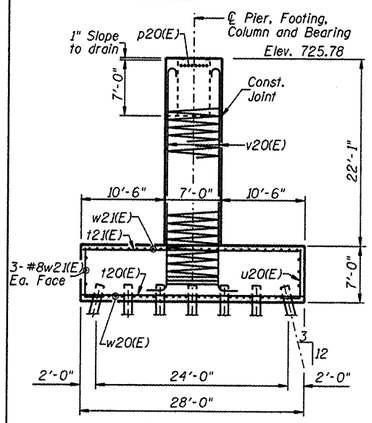

END VIEW
(Looking North)

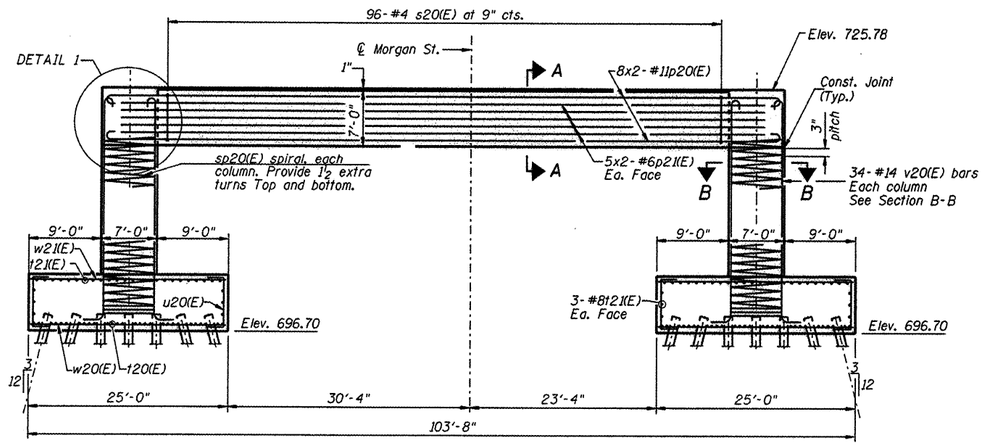

ELEVATION

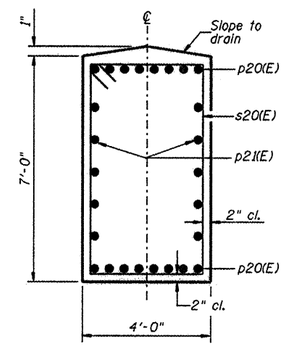

SECTION A-A

BEARING SEAT ELEVATIONS

LOCATION	ELEVATION
Column 1	725.78
Column 2	725.78

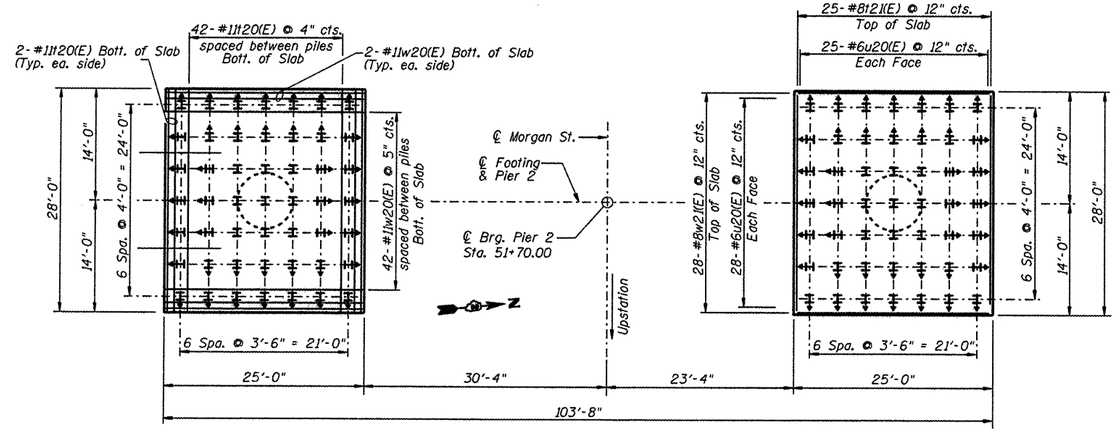

FOOTING PLAN

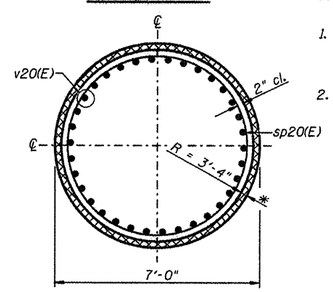

SECTION B-B

*2" Allowance for concrete form liner. Form liner is not allowed to intrude on 3'-4" radius. Additional concrete required will be paid for under Form Liner Textured Surface.

MIN. BAR LAPS

#6 = 3'-10"
#11 = 13'-7"

PILE DATA

Type: HP 12x53, with Pile Shoes
Nominal Required Bearing: 360 Kips
Allowable Resistance Available: 119 Kips
Est. Length: 93 ft.
No. Production Piles: 97
No. Test Piles: 1

L:\ROCKFORD\B826982\Drawn\CADD_Sheets\S_74_Pier 2.dgn

CMT ©Copyright CMT, Inc. CRAWFORD, MURPHY & TILLY, INC. CONSULTING ENGINEERS License No. 184-000613

HNTB

DESIGNED - PA, JDJ, BPD, CJW	REVISED -		
DRAWN - GLD	REVISED -		
CHECKED - RJK	REVISED -		
DATE - 02/04/2011	REVISED -		

CITY OF ROCKFORD
MORGAN STREET BRIDGE

PIER - 2
STRUCTURE NO. 101-6108

SCALE: | SHEET NO. 74 OF 79 SHEETS | STA. 47+00.74 TO STA. 52+63.50

F.A.U. RTE.	SECTION	COUNTY	TOTAL SHEETS	SHEET NO.
5077	99-00493-00-BR	WINNEBAGO	253	200

CONTRACT NO. 85529

FED. ROAD DIST. NO. 2 | ILLINOIS | FED. AID PROJECT BRM-5099(65)