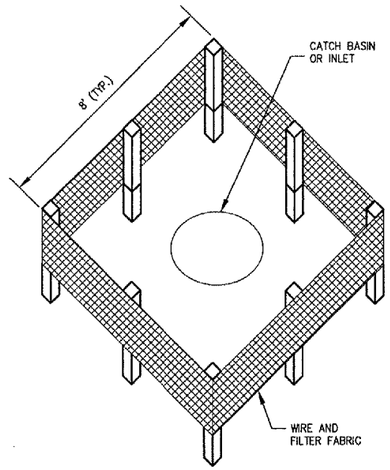

SILT FENCE PLACEMENT
AT MANHOLES

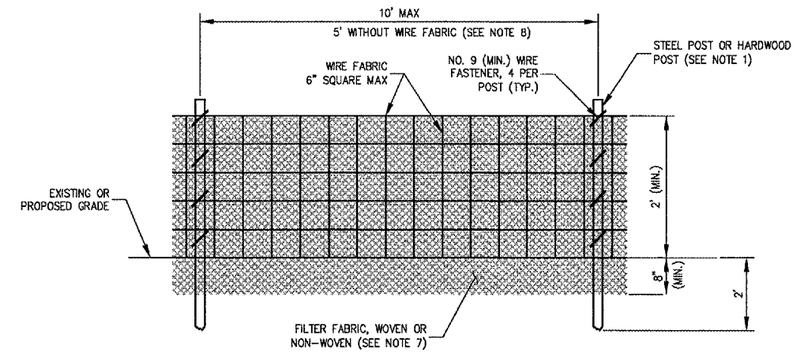

ELEVATION

NOTES:

1. FILTER FABRIC SHALL BE EMBEDDED 8" INTO THE SOIL.
2. INSPECTION SHALL BE FREQUENT AND REPAIR/REPLACEMENT SHALL BE MADE PROMPTLY AS NEEDED.
3. SILT FENCE SHALL BE REMOVED WHEN IT HAS SERVED ITS USEFULNESS SO AS NOT TO BLOCK OR IMPEDE STORM FLOW OR DRAINAGE. CONTRACTOR SHALL PLACE SEED AND MULCH AROUND STRUCTURES PER LANDSCAPING PLAN. COST OF REMOVAL SHALL BE INCLUDED IN THE CONTRACT UNIT PRICE FOR SILT FENCE.
4. AREAS DISTURBED OUTSIDE OF CONSTRUCTION LIMITS DURING PLACEMENT OF INLET PROTECTION TO BE REGRADED, SEEDED AND MULCHED, COST INCIDENTAL TO SILT FENCE.
5. FENCE AND POSTS SHALL BE REMOVED WHEN DIRECTED AT PROJECT END.

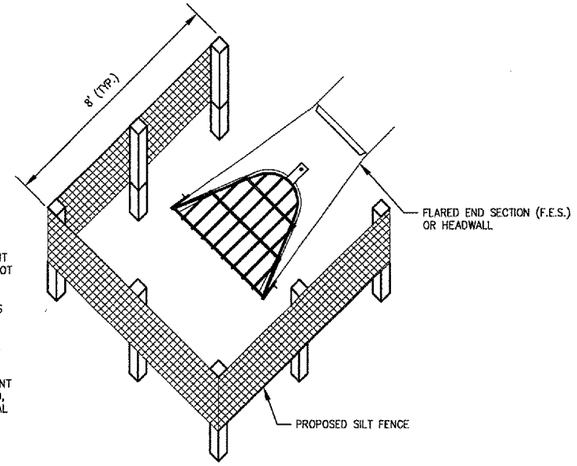

SILT FENCE PLACEMENT
AT FLARED END SECTIONS (FES) OR HEADWALLS

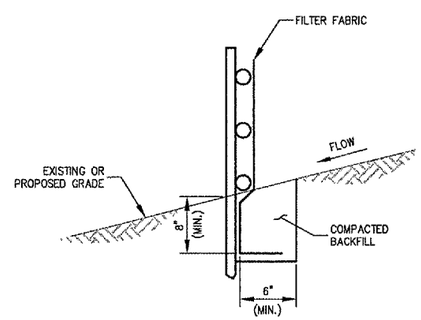

FABRIC ANCHOR DETAIL

NOTES:

1. FENCE POST SHALL BE EITHER STEEL "T" LINE POST OR HARDWOOD POST WITH A MINIMUM SECTIONAL AREA OF 3.0 SQUARE INCHES.
2. TOP AND BOTTOM WIRE OF WIRE FABRIC SHALL BE MINIMUM GAGE NO. 9. INTERMEDIATE WIRES OF THE WIRE FABRIC SHALL BE MINIMUM GAGE NO. 11.
3. WIRE FABRIC SHALL BE SECURELY FASTENED TO FENCE POSTS WITH NO. 9 GAGE WIRE MINIMUM. FOUR (4) FASTENERS PER POST REQUIRED.
4. FILTER FABRIC SHALL BE SECURELY FASTENED TO WIRE FABRIC AND POSTS WITH TIES OR STAPLES SPACED AT 12" APART AT THE TOP, MIDDLE AND BOTTOM.
5. WHEN TWO SECTIONS OF FILTER FABRIC MEET, THEY SHALL BE OVERLAPPED BY 6" AND FOLDED AND ATTACHED TO THE WIRE FABRIC AT A POST.
6. MAINTENANCE SHALL BE PERFORMED AS NEEDED AND MATERIAL REMOVED AND REPLACED WHEN BULGES DEVELOP IN THE SILT FENCE.
7. FILTER FABRIC SHALL BE IN ACCORDANCE WITH SPECIAL PROVISIONS WITH EQUIVALENT OPENING SIZE OF AT LEAST 30 FOR NONWOVEN AND 50 FOR WOVEN.
8. WIRE FABRIC MAY BE OMITTED IF A MAXIMUM OF 5 FEET IS USED FOR POST-TO-POST SPACING.
9. SILT FENCE SHALL BE INSTALLED PRIOR TO ANY GRADING WORK IN THE AREA TO BE PROTECTED. PERIODIC INSPECTION SHALL BE PERFORMED AND REQUIRED MAINTENANCE SHALL BE PROVIDED AFTER EACH RAIN EVENT.
10. FENCE POSTS SHALL BE REMOVED WHEN DIRECTED AT PROJECT END.

SILT FENCE DETAIL

INLET, F.E.S. OR HEADWALL PROTECTION DETAIL

DETAILS SHOWN ARE NOT TO SCALE

DI021

HANSON
HANSON PROFESSIONAL SERVICES INC.
815 Commerce Drive Suite 200
Oak Brook, Illinois 60523
Telephone: 630.990.3800
Fax: 630.990.3801

City of Dixon
CITY OF DIXON, ILLINOIS
Post Office Box 386
Dixon, Illinois 61021
Telephone: 815.288.1485

DIXON MUNICIPAL AIRPORT
CHARLES R. WALGREEN FIELD

OVERLAY TAXIWAYS A, A1, A2 AND C:
REMOVE AND REPLACE TAXIWAY C1

AIP PROJECT NO. 3-17-0036-B9
IDA PROJECT NO. C73-3549

No.	Drawing Issue Description	Date	By

Date
MARCH 3, 2006

Sheet Title
STORMWATER POLLUTION PREVENTION DETAILS

843-05B8009
Project Number
LDH 07/01/05
Layout By Date
LDH, KLK 07/01/05
Designed By Date
RMH 02/03/06
Reviewed By Date
LDH
Drawn By

7
Sheet No.

E:\DIXJOBS\00843\05B8009\DRAWINGS\SHEETS\07-SWPP DETAILS.DWG MAR 10, 2006 10:09AM KLK